Weston Solutions, Inc.
1625 Pumphrey Avenue
Auburn, Alabama 36832-4303
334-466-5600 • Fax 334-466-5660
www.westonsolutions.com

18 August 2006

Ms. Jacquelyn Taylor
Bowater Incorporated
5300 Cureton Ferry Road
Catawba, South Carolina 29704

Work Order No. 03917.008.007

Re: No. 3 Recovery Furnace
Particulate Matter and Nitrogen Oxides Emission Test Report

Dear Ms. Taylor:

Enclosed are three copies and one CD of the above-referenced test report. Submission of this report was authorized by your purchase order. An invoice has been forwarded under separate cover.

We appreciate the cooperation and help you and your staff provided during the project. If there are any questions regarding the report, or if we can be of additional assistance to you in any way, please contact me at 334-466-5627. We look forward to working with you in the future.

Sincerely,

WESTON SOLUTIONS, INC.

Templeton Simpkins
Project Manager

jb

Enclosure

K:\03917\008\007\REPORT\#3 RF\BOWATER CATAWBA AUG 06 #3 RF PM-NOX RPT.DOC

18 August 2006 10:30 a.m. Version

**Work Order No. 03917.008.007**

# No. 3 Recovery Furnace
# Particulate Matter and Nitrogen Oxides
# Emission Test Report
## Bowater Incorporated
## Catawba, South Carolina
## 26 July 2006

Prepared For

**BOWATER INCORPORATED**
5300 Cureton Ferry Road
Catawba, South Carolina 29704

Templeton Simpkins
Project Manager
Approved for Transmittal

Melanie Wright, Ph.D.
Quality Assurance Manager
Approved for Transmittal

Prepared By

**WESTON SOLUTIONS, INC.**
1625 Pumphrey Ave.
Auburn, Alabama 36832-4303
Phone: (334) 466-5600 Fax: (334) 466-5660

**18 August 2006**

# TABLE OF CONTENTS

SECTION 1 INTRODUCTION ..... 1-1

SECTION 2 RESULTS AND DISCUSSION ..... 2-1

SECTION 3 SOURCE TESTING METHODOLOGY ..... 3-1

APPENDIX A SAMPLE CALCULATIONS

APPENDIX B TEST METHODOLOGY

APPENDIX C FIELD DATA – NO. 3 RECOVERY FURNACE

APPENDIX D LABORATORY DATA

APPENDIX E QUALITY CONTROL DATA

APPENDIX F PROCESS OPERATING/PRODUCTION DATA

## LIST OF TABLES

Table 2-1 No. 3 Recovery Furnace Summary of PM and $NO_X$ Emission Results ..... 2-1

Table 3-1 Source Testing Methodology ..... 3-1

# SECTION 1
# INTRODUCTION

Weston Solutions, Inc. (WESTON®) was retained by Bowater Incorporated (Bowater) to conduct particulate matter (PM) and nitrogen oxides ($NO_X$) emission testing on the No. 3 Recovery Furnace at the mill in Catawba, South Carolina. The purpose of the emission testing was to demonstrate compliance with the South Carolina Department of Health and Environmental Control (DHEC) permit limits.

WESTON performed the emission testing on 26 July 2006. The project team was comprised of the following individuals.

| Name | Project Role |
|---|---|
| Temp Simpkins | Project Manager/Test Team Leader |
| Melanie Wright | Quality Assurance Manager |
| Matt Savin | Test Team Member |
| Bart McDaniel | Test Team Member |
| Jeremy Wood | Test Team Member |
| Natalie Hornsby | Report Coordinator |

Ms. Jacquelyn Taylor of Bowater coordinated the testing with mill operations and served as WESTON's technical contact throughout the effort. A representative of DHEC was not present for testing.

Table 2-1 provides a detailed summary of the emission results. Any differences between the calculated results presented in the appendices and the results reported in the summary table are due to rounding for presentation.

**TABLE 2-1**
**NO. 3 RECOVERY FURNACE**
**SUMMARY OF PM AND $NO_x$ EMISSION RESULTS**

| | Run 1 | Run 2 | Run 3 | Mean |
|---|---|---|---|---|
| Date | 7/26/06 | 7/26/06 | 7/26/06 | ---- |
| Time Began | 0758 | 0922 | 1050 | ---- |
| Time Ended | 0902 | 1024 | 1152 | ---- |
| **Stack Gas Data** | | | | |
| Temperature, °F | 345 | 347 | 347 | 346 |
| Velocity, ft/sec | 80 | 81 | 81 | 81 |
| Moisture, % | 27 | 27 | 28 | 27 |
| $CO_2$ Concentration, % | 12.7 | 12.7 | 12.7 | 12.7 |
| $O_2$ Concentration, % | 6.8 | 6.8 | 6.8 | 6.8 |
| VFR, x $10^5$ dscfm | 2.00 | 1.99 | 1.98 | 1.99 |
| **Particulate Matter** | | | | |
| Isokinetic Sampling Rate, % | 104 | 101 | 101 | 102 |
| Concentration, gr/dscf | 0.0267 | 0.0276 | 0.0257 | 0.0267 |
| Concentration, gr/dscf @ 8% $O_2$ | 0.0245 | 0.0253 | 0.0235 | 0.0244 |
| **Permit Limit, gr/dscf @ 8% $O_2$** | ---- | ---- | ---- | **0.036** |
| **Nitrogen Oxides** | | | | |
| Concentration, ppm | 55.0 | 54.0 | 56.0 | 55.0 |
| Concentration, ppm @ 8% $O_2$ | 50.3 | 49.4 | 51.2 | 50.3 |
| **Permit Limit, ppm @ 8% $O_2$** | ---- | ---- | ---- | **78** |

# SECTION 3
# SOURCE TESTING METHODOLOGY

The emission testing program was conducted in accordance with the U.S. EPA Reference Methods summarized in Table 3-1. Method descriptions and quality assurance data are provided in the referenced appendices.

**TABLE 3-1**
**SOURCE TESTING METHODOLOGY**

| Parameter | Method Number | Appendix Reference | | Comments |
|---|---|---|---|---|
| | | Method Description | Quality Control Data | |
| Volumetric Flow Rate | 1,2,3A,4 | B.1 | E | |
| Particulate Matter | 5 | B.2 | E | |
| Nitrogen Oxides | 7E | B.3 | E | |

Post-test equipment calibrations for the probe and pitot will be maintained on file at WESTON.

# APPENDIX A
# SAMPLE CALCULATIONS

# SAMPLE CALCULATIONS

## No. 3 Recovery Furnace
## Run No. 1

**Meter Pressure (Pm), in. Hg**

$$Pm = Pb + \frac{\Delta H}{13.6\ in.\ H_2O/in.\ Hg}$$

where, Pb = barometric pressure, in. Hg
$\Delta H$ = Pressure differential of orifice in. $H_2O$

$$Pm = 29.38\ in.\ Hg + \frac{1.305\ in.\ H_2O}{13.6\ in.\ H_2O/in.\ Hg} = 29.48\ in.\ Hg$$

**Absolute Stack Gas Pressure (Ps), in. Hg**

$$Ps = Pb + \frac{Pg}{13.6\ in.\ H_2O/in.\ Hg}$$

where, Pb = barometric pressure, in. Hg
Pg = Static Pressure, in. $H_2O$

$$Ps = 29.38\ in.\ Hg + \frac{-1.10\ in.H_2O}{13.6\ in.\ H_2O/in.\ Hg} = 29.30\ in.\ Hg$$

**Standard Meter Volume (Vmstd), dscf**

$$Vmstd = \frac{17.64\ °R/in.\ Hg\ \ x\ Y\ \ x\ Vm\ \ x\ Pm}{Tm}$$

where, Y = meter correction factor
Vm = meter volume, cf
Pm = meter pressure, in. Hg
Tm = meter temperature, °R

$$Vmstd = \frac{17.64\ °R/in.\ Hg\ \ x\ 1.003\ \ x\ 38.963\ cf\ x\ 29.48\ in.\ Hg}{542\ °R} = 37.477\ dscf$$

**Standard Wet Volume (Vwstd), scf**

$$Vwstd = 0.04707\ ft^3/mL\ x\ Vlc$$

where, Vlc = volume of $H_2O$ collected, mL

$$Vwstd = 0.04707\ ft^3/mL\ x\ 287.3\ mL = 13.523\ scf$$

**Moisture Fraction (Measured), (Bws)**

$$Bws = \frac{Vwstd}{(Vwstd + Vmstd)} = \frac{13.523\ scf}{13.523\ scf\ +\ 37.477\ dscf} = 0.265$$

where, Vwstd = standard wet volume, scf
Vmstd = standard meter volume, dscf

**Moisture, % (M%)**

$$M\% = Bws\ x\ 100 = 0.265\ x\ 100 = 26.5$$

where, Bws = moisture fraction, measured or at saturation, whichever is lowest

**Molecular Weight (DRY) (Md), lb/lb-mole**

$$Md = (0.44\ x\ \%\ CO_2) + (0.32\ x\ \%\ O_2) + (0.28(100 - \%\ CO_2 - \%\ O_2))$$

$$Md = (0.44\ x\ 12.7) + (0.32\ x\ 6.8) + (0.28(100 - 12.7 - 6.8)) = 30.30\ lb/lb\text{-}mole$$

**Molecular Weight (WET) (Ms), lb/lb-mole**

$$Ms = Md\ (1 - Bws) + 18(Bws)$$

where, Md = molecular weight (DRY), lb/lb-mole
Bws = moisture fraction, dimensionless

$$Ms = 30.30\ lb/lb\text{-}mole\ (1 - 0.265) + 18(0.265) = 27.04\ lb/lb\text{-}mole$$

**Average Velocity (Vs), ft/sec**

$$Vs = 85.49 \frac{ft}{sec} \sqrt{\frac{(lb/lb\text{-}mole)(in.\ Hg)}{(°R)(in.\ H_2O)}}\ x\ Cp\ x\ \sqrt{Delta\ P}\ avg.\ x\ \sqrt{\frac{Ts}{Ps\ x\ Ms}}$$

where, Cp = pitot tube coefficient
Delta P = velocity head of stack gas, in. $H_2O$
Ts = absolute stack temperature, °R
Ps = absolute stack gas pressure, in. Hg
Ms = molecular weight of stack gas, lb/lb-mole

$$Vs = 85.49 \frac{ft}{sec} \sqrt{\frac{(lb/lb\text{-}mole)(in.\ Hg)}{(°R)(in.H_2O)}}\ x\ 0.84\ x\ 1.111 in.\ H_2O\ x\ \sqrt{\frac{805\ °R}{29.30 in.\ Hg\ x\ 27.04\ lb/lb\text{-}mole}}$$

$$Vs = 80.44\ ft/sec$$

**Average Stack Gas Flow at Stack Conditions (Qa), acfm**

$$Qa = 60\ sec/min\ x\ Vs\ x\ As$$

where, Vs = stack gas velocity, ft/sec
As = cross-sectional area of stack, $ft^2$

$$Qa = 60\ sec/min\ x\ 80.44\ ft/sec\ x\ 87.97\ ft^2 = 4.25\ E+05\ acfm$$

**Average Stack Gas Flow at Standard Conditions (Qs), dscfm**

$$Qs = 17.64 \frac{°R}{in.\ Hg}\ x\ Qa\ x\ (1 - Bws)\ x\ \frac{Ps}{Ts}$$

where, Qa = average stack gas flow at stack conditions, $ft^3$/min
Bws = moisture content (dimensionless)
Ps = absolute stack gas pressure, in. Hg
Ts = absolute stack temperature, °R

$$Qs = 17.64 \frac{°R}{in.\ Hg}\ x\ 4.25\ E+05 \frac{acf}{min}\ x\ (1 - 0.265)\ x\ \frac{29.30 in.\ Hg}{805\ °R} = 2.00\ E+05\ dscfm$$

**Percent Isokinetic Sampling Rate (%I)**

$$\%I = \frac{0.0945(in.Hg)(min)/(°R)(sec)\ x\ Ts\ x\ Vmstd}{Ps\ x\ Vs\ x\ An\ x\ \Theta\ x\ (1-Bws)}$$

where, Ts = avg. stack temperature, °R
Vmstd = standard meter volume, dscf
Ps = absolute stack gas pressure, in. Hg
Vs = stack gas velocity, ft/sec
An = cross-sectional area of nozzle, $ft^2$
Θ = total sampling time, min
Bws = moisture content (dimensionless)

$$\%I = \frac{0.0945(in.Hg)(min)/(°R)(sec)\ x\ 805°R\ x\ 37.477\ dscf}{29.30\ in.Hg\ x\ 80.44\ ft/sec\ x\ 2.64\ E\text{-}04\ ft^2\ x\ 60\ min\ x\ (1-0.265)}$$

$$\%I = 104.0$$

**Particulate Matter Concentration at Standard Conditions (Cs), gr/dscf**

$$Cs = 15.43\frac{gr}{g}\ x\ \frac{Mn}{Vmstd} = 15.43\frac{gr}{g}\ x\ \frac{0.0649\ g}{37.477\ dscf} = 0.0267\ gr/dscf$$

where, Mn = particulate matter collected, g
Vmstd = std. meter volume, dscf

**Particulate Matter Concentration Corrected for $O_2$, Cs @ 8% $O_2$**

$$Cs, \frac{gr}{dscf}\ x\ \frac{20.9 - 8\%\ O_2}{20.9 - measured\ \%\ O_2}$$

**Note: $O_2$ corrections are based on source category or specific sources, i.e. 10% for Lime Kilns 8 % for Recovery Boilers**

$$= 0.0267, \frac{gr}{dscf}\ x\ \frac{20.9 - 8\%\ O_2}{20.9 - 6.8\%\ O_2}$$

$$= 0.0245$$

**Particulate Matter Emission Rate (PMR), lb/hr**

$$PMR = \frac{Cs \ x \ Qs \ x \ 60 \frac{min}{hr}}{7000 \frac{gr}{lb}}$$

where, Cs = particulate conc. at std. cond., gr/dscf
Qs = avg. stack gas flow at std. cond., dscf/min

$$PMR = \frac{0.0267 \frac{gr}{dscf} \ x \ 2.00 \ E+05 \frac{dscf}{min} \ x \ 60 \frac{min}{hr}}{7000 \frac{gr}{lb}} = 45.8 \ lb/hr$$

**Particulate Matter Emission Factor (PMF), lb/ton BLS**

$$PMF = \frac{lb/hr}{ton \ ADTP/hr}$$

$$PMF = \frac{45.8}{43}$$

$$PMF = 1.066 \ lb/ton \ ADTP$$

**$NO_x$ Emission Rate (EMR), lb/hr**

$$EMR = \frac{conc. \ x \ Mw \ x \ Qs \ x \ 60 \frac{min}{hr} \ x \ 28.32 \frac{L}{dscf}}{24.04 \frac{L}{g\text{-}mole} \ x \ 1.0 \ x \ 10^6 \ \frac{\mu L}{L} \ x \ 454 \frac{s}{lb}}$$

$$EMR = \frac{55 \ x \ 46.01 \ x \ 2.00 \ E+05 \ x \ 60 \ x \ 28.32}{24.04 \ x \ 1.0 \ x \ 10^6 \ x \ 454}$$

$$EMR = 78.9$$

**$NO_x$ Emission Factor (EMF), lb/ton ADTP**

$$EMF = \frac{lb/hr}{ton \ ADTP/hr}$$

$$EMF = \frac{78.9}{43}$$

$$EMF = 1.83 \ lb/ton \ ADTP$$

# APPENDIX B
# TEST METHODOLOGY


B.1 VOLUMETRIC FLOW RATE

B.2 PARTICULATE MATTER

B.3 NITROGEN OXIDES

# B.1 VOLUMETRIC FLOW RATE

Mass emission rates are calculated by multiplying measured target analyte concentrations by calculated volumetric flow rates. Volumetric flow rates are calculated using measurement data obtained by EPA Reference Methods 1-4.

The ductwork is measured at the sample location to the nearest 0.25 inch using a steel tape measure. Traverse points are selected in accordance with EPA Reference Method 1 on the basis of ductwork dimensions, geometry, and upstream and downstream disturbances. When a sample location does not meet EPA Reference Method 1 criteria, the maximum recommended number of traverse points is used.

## Gas Velocity

The velocity of the gas stream is measured in accordance with EPA Reference Method 2 by reading the instantaneous velocity pressure with an inclined manometer at each traverse point using either a standard "P" type or an "S" type pitot tube. The stack pressure is calculated from the measured static pressure of the stack and the ambient barometric pressure. The static pressure is measured by using the static side of the pitot tube, and the barometric pressure is measured using a calibrated aneroid barometer. Magnahelic® gauges with scales of 0 to 5 and 0 to 25 inches of water or an inclined manometer with a scale of 0 to 10 inches of water are used for velocity pressure measurements. Manometer selection is determined by the velocity pressure of the gas stream. A manometer with a 0 to 0.25 inch scale may be used when the velocity pressure of the gas stream is less than 0.02 inches of water. By convention, any measured velocity pressures of less than 0.005 inches of water are recorded and reported as less than 0.005 inches of water. The stack temperature is measured with a calibrated thermocouple and pyrometer.

For low velocity pressure measurements (less than 0.005 inches of water) a hot wire anemometer may be used to measure the velocity of the gas stream. The indicated velocity is used without correction when the gas stream is ambient air with a moisture content of less than 65%. The indicated velocity is corrected in accordance with procedures specified by the manufacturer when the moisture content exceeds 65% or when the dry gas fraction is something other than ambient air.

## Gas Composition and Moisture Content

The composition of the gas stream is measured in accordance with EPA Reference Method 3A using an analyzer.

Integrated samples are collected by withdrawing a sample from the source through a moisture condenser into a Tedlar® sample bag. The bag is then analyzed using a calibrated $O_2/CO_2$ analyzer.

The moisture content of the gas stream is determined using one of the following procedures:

- For sources requiring testing by EPA Reference or Test Methods 5, 8, 12, 13, 17, 23, 26A, 29, 0010, or 0011, moisture is determined by EPA Reference Method 4. At the conclusion of each run the volume of condensed moisture in the impingers of the sampling train is measured and used to calculate the moisture content of the gas stream.

- For sources with temperatures greater than 212 °F, the approximation technique described in EPA Reference Method 4 may be used with midget impingers to condense moisture before dry gas volume measurement.

- For sources with a temperature of less than 212 °F, wet bulb/dry bulb temperature measurements may be made, and the moisture content calculated using vapor pressure tables.

When multiple methods are used for moisture determinations, the lowest moisture value is used for volumetric flow calculations.

The molecular weight of the gas stream is calculated using the measured moisture, oxygen, and carbon dioxide concentrations. The balance of the gas stream is assumed to be nitrogen. The volumetric flow is then calculated at stack and standard conditions using the calculated molecular weight, the measured stack temperature, and measured velocity, stack and barometric pressures. Standard conditions are 68 °F and 29.92 inches of mercury and 0% moisture.

## Data Acquisition and Reporting

Data are recorded at the time of collection on preprinted data sheets. Calculations are performed (where possible) with preprogrammed calculators or spreadsheet software.

## Quality Control

Quality control procedures for volumetric flow measurements involve leak checks of pitot tubes, pitot tube lines and manometers; periodic analysis of ambient air and duplicate analysis of source gas samples with the Fyrite analyzer; triplicate analysis with the Orsat analyzer; and periodic calibration checks of thermocouples and pyrometers.

Data transfers are minimized. Data sheets are checked for completeness and accuracy. Calculations are verified by a second person.

## B.2 PARTICULATE MATTER

Particulate matter (PM) emission testing is conducted using EPA Reference Method 5. EPA Reference Methods 1-4 are used, as appropriate, for traverse point selection, determination of stack gas molecular weight, stack gas moisture determination, and volumetric flow rate.

**Sampling Equipment and Procedures**

The sampling train utilized to perform the PM sampling is an EPA Reference Method 5 train manufactured by Graseby-Nutech, Graseby-Anderson, or Apex Instruments (see Figure B-1). A measured borosilicate, quartz glass, or stainless steel (316) nozzle is attached to a heated (248 ± 25 °F) borosilicate or quartz glass, or stainless steel probe of appropriate length. The probe is connected to a heated (248 ± 25 °F) borosilicate glass filter holder containing a 9-cm glass fiber filter (preweighed to a constant 0.1 mg weight). The first and second impingers each contain 100 mL of distilled water, the third impinger is empty, and the fourth impinger contains 200 to 300 grams of dry preweighed silica gel. The second impinger is a standard Greenburg-Smith type. The first, third, and fourth impingers are of a modified design. All impingers are maintained in a crushed ice bath. A gas measuring control console with a leak-free vacuum pump, a calibrated dry gas meter, a calibrated orifice, and inclined manometers are connected to the final impinger, probe, heated filter holder, and pitot tube via an umbilical cord to complete the train.

Flue gas velocity is measured with a calibrated S-type pitot tube (provided with extensions) fastened alongside the sampling nozzle. Flue gas temperature is monitored with a calibrated direct readout pyrometer equipped with a chromel-alumel (Type K) thermocouple positioned near the sampling nozzle. The probe, filter box, and impinger exit gas temperatures are monitored with a calibrated direct readout pyrometer equipped with Type K thermocouples positioned in the probe, heated filter chamber, and in the sample gas stream after the last impinger. Stack gas stream composition (carbon dioxide and oxygen content) is determined as previously described. The sampling rate is adjusted, based on stack velocity, at each point to ensure the sample is collected isokinetically.

At the conclusion of each test, the sampling train is leak checked. Upon completion of a successful leak check, the sampling train is dismantled, openings are sealed, and the components recovered as described below.

- The glass fiber filter(s) is/are removed from its holder with tweezers and placed in its original container, along with any particulate and filter fragments (Sample Fraction 1).

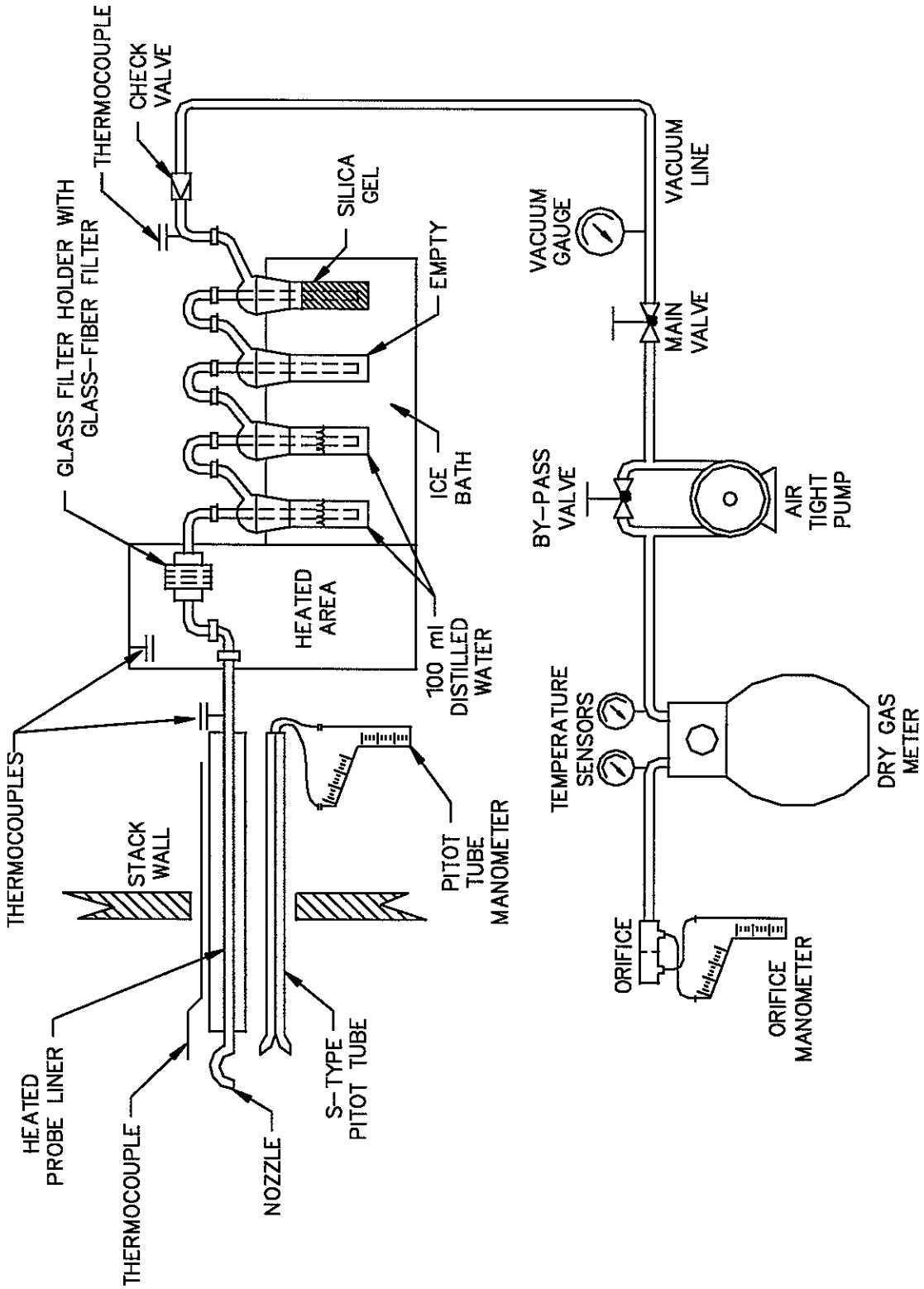


**Figure B-1 EPA Reference Method 5 Sampling Train**

- The probe and nozzle are separated and the particulate rinsed with distilled water or acetone into a polyethylene container while brushing a minimum of three times. Particulate adhering to the brush is rinsed with the appropriate solvent into the same container. The front half of the filter holder and connecting glassware are also rinsed. These rinses are combined (Sample Fraction 2).

- The total liquid content of impingers one, two, and three are measured volumetrically for stack gas moisture content calculation. This liquid is discarded.

- The silica gel is removed from the last impinger and immediately weighed to the nearest 0.1 g for stack gas moisture content calculation.

- Aliquots of the appropriate solvents and a filter are retained for blank analyses.

Each sample bottle is labeled to clearly identify its contents. The liquid level is marked on each bottle. The samples are then secured for transport to a laboratory for analysis. Sample integrity is assured by maintaining chain-of-custody records.

**Sample Analysis**

The particulate analysis proceeds as follows:

- The sample filters (Sample Fraction 1) and blank filter are desiccated for 24 hours and weighed to the nearest 0.1 mg to constant (± 0.5 mg) weight.

- The nozzle, probe, and front half of the filter holder wash samples (Sample Fraction 2), along with the solvent blank, are evaporated in tared beakers, then desiccated and weighed to the nearest 0.1 mg to constant (± 0.5 mg) weights.

The total weight of material measured in the front half wash in addition to the weight of material collected on the glass fiber filter represent the total PM catch for each train. Blank corrections are made where appropriate for all sample weights.

**Data Acquisition and Reduction**

Data are recorded at the time of collection on preprinted data sheets. Calculations are performed with preprogrammed calculators or spreadsheet software. Data transfers are minimized. Field and laboratory data sheets are be checked for completeness and accuracy. Calculations are verified by a second person.

**Quality Control**

Dry gas meters are calibrated before and after sampling. Thermocouples are calibrated against mercury thermometers, and aneroid barometers are calibrated against a mercury barometer. WESTON participated satisfactorily in the most recent dry gas meter audit supplied by the EPA. Those data are on file at WESTON.

Prior to and following each run, the sampling train is leak checked. An acceptable leak rate does not exceed the lesser of 0.02 actual cubic feet per minute (acfm) or 4% of the actual sampling rate. The isokinetic sampling rate is calculated at the completion of each sample run. If the isokinetic sampling rate is not within 100% ± 10%, the sample run is repeated.

Samples are transported to the laboratory under chain-of-custody. Solvent blanks and filter blanks are analyzed at the same time as the samples. The mass collected on the filters and the mass in the probe wash are corrected by the blank measurements.

WESTON uses Class S weights during each stage of the analysis to verify the accuracy of the balance. The balance is repaired and recalibrated before proceeding if there is a significant difference in the actual mass and measured mass.

## B.3 NITROGEN OXIDES (INSTRUMENTAL)

Nitrogen oxides ($NO_x$) testing on some sources may be conducted in accordance with EPA Reference Method 7E.

**Sampling Equipment and Procedures**

Figure B-2 illustrates the sampling system. The sample is withdrawn from the source through a heated probe, filter, and sample line to a sample conditioner, which removes moisture from the gas stream. The sample is then transported to a California Analytical Model 400-CLD Analyzer through a Teflon® line.

**Sample Analysis**

The analyzer uses an oxidizing converter to produce nitric oxide (NO) molecules. A chemiluminescent reaction of NO and ozone is then used to produce nitrogen dioxide ($NO_2$), oxygen ($O_2$), and infrared light. This infrared light is measured using a highly sensitive optical filter/photomultiplier whose output is linearly proportional to the NO concentration.

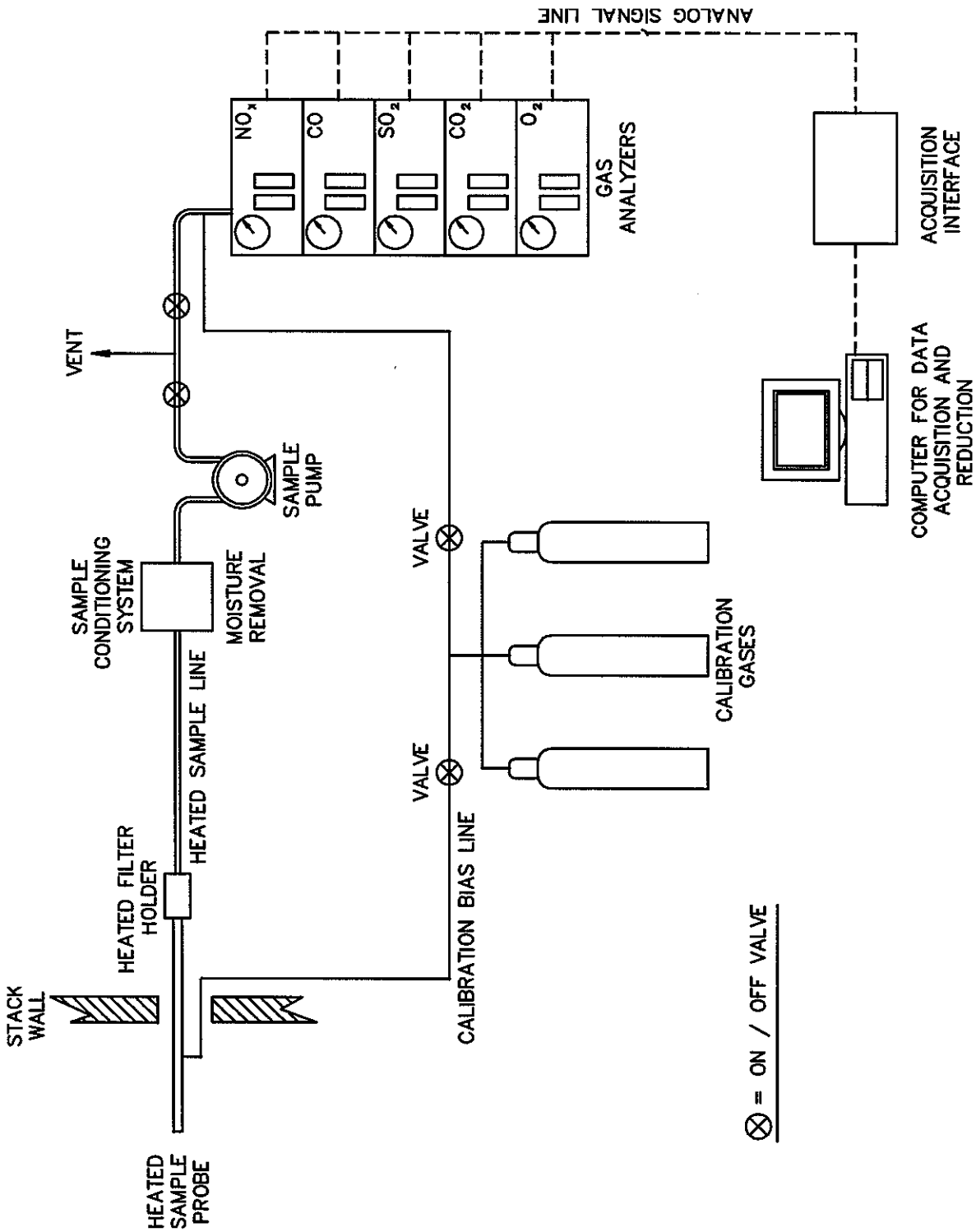


**Figure B-2 Continuous Emission Monitoring System**

## Data Acquisition and Reduction

Data are acquired electronically using an IBM compatible computer and software designed by WESTON for EPA Reference Method 7E analysis. This system generates a calibration curve, converts electronic signals into concentrations, and provides bias-corrected hourly averages.

## Quality Control

At the time of analysis, NO in nitrogen calibration gases, certified according to EPA Protocol-1, are used to calibrate the analyzer and to determine a bias correction factor for the entire system. Calibration and system response is performed in accordance with EPA Reference Method 7E.

Calibration gases are introduced directly to the analyzer to generate the calibration curve. A calibration gas is introduced at the probe and recovered through the sampling and analytical system. A bias correction factor is calculated using the ratio of the measured concentration of the bias gas and concentration certified by the vendor. An interference response study was performed by the manufacturer of the analyzer. The data from this study are on file at WESTON.

An $NO_2$ to NO conversion efficiency test is performed on site in accordance with the procedure described in either EPA Reference Method 20 or Alt. 013. The results from this study should indicate that the $NO_2$ to NO conversion efficiency does not drop more than 2% from the highest level or is greater than 90%, respective to the chosen method.

# APPENDIX C
# FIELD DATA – NO. 3 RECOVERY FURNACE

Bowater
Catawba, SC

03917.008.007
No. 3 Recovery Boiler

## ISOKINETIC CALCULATIONS

| Run Number | | 1 | 2 | 3 | Mean |
|---|---|---|---|---|---|
| Date | | 7/26/06 | 7/26/06 | 7/26/06 | --- |
| Time Began | | 758 | 922 | 1050 | --- |
| Time Ended | | 902 | 1024 | 1152 | --- |
| INPUT DATA | | | | | |
| Sampling Time, min | (Theta) | 60.0 | 60 | 60 | 60 |
| Stack Diameter, in. | (Dia.) | 127.00 | 127.00 | 127.00 | 127.00 |
| Barometric Pressure, in. Hg | (Pb) | 29.38 | 29.38 | 29.38 | 29.38 |
| Static Pressure, in. H2O | (Pg) | -1.10 | -1.10 | -1.10 | -1.10 |
| Pitot Tube Coefficient | (Cp) | 0.84 | 0.84 | 0.84 | 0.84 |
| Meter Correction Factor | (Y) | 1.0030 | 1.0030 | 1.0030 | 1.0030 |
| Orifice Calibration Value | (Delta H@) | 1.7830 | 1.7830 | 1.7830 | 1.7830 |
| Nozzle Diameter, in. | (Dn) | 0.220 | 0.220 | 0.220 | 0.220 |
| Meter Volume, ft^3 | (Vm) | 38.963 | 38.457 | 38.984 | 38.801 |
| Meter Temperature, °F | (Tm) | 82.2 | 94.4 | 103.5 | 93.4 |
| Meter Temperature, °R | (Tm-R) | 542.2 | 554.4 | 563.5 | 553.4 |
| Meter Orifice Pressure, in. H2O | (Delta H) | 1.305 | 1.245 | 1.247 | 1.266 |
| Ave Sq Rt Orifice Press, (in. H2O)^½ | ((Delta H)½)avg) | 1.140 | 1.113 | 1.115 | 1.122 |
| Volume H2O Collected, mL | (Vlc) | 287.3 | 285.8 | 291.4 | 288.2 |
| CO2 Concentration, % | (CO2) | 12.7 | 12.7 | 12.7 | 12.7 |
| O2 Concentration, % | (O2) | 6.8 | 6.8 | 6.8 | 6.8 |
| Ave Sq Rt Velo Head, (in. H2O)^½ | ((Delta P)½)avg) | 1.111 | 1.113 | 1.115 | 1.113 |
| Stack Temperature, °F | (Ts) | 345.4 | 346.7 | 347.4 | 346.5 |
| Stack Temperature, °R | (Ts-R) | 805.4 | 806.7 | 807.4 | 806.5 |
| Particulate Collected, g | (Mn) | 0.0649 | 0.0648 | 0.0601 | 0.0633 |
| Production Rate, tons ADTP/hr | (Pr) | 43 | 43 | 43 | 43 |
| CALCULATED DATA | | | | | |
| Nozzle Area, $ft^2$ | (An) | 2.64E-04 | 2.64E-04 | 2.64E-04 | 2.64E-04 |
| Stack Area, $ft^2$ | (As) | 87.97 | 87.97 | 87.97 | 87.97 |
| Stack Pressure, in. Hg | (Ps) | 29.30 | 29.30 | 29.30 | 29.30 |
| Meter Pressure, in. Hg | (Pm) | 29.48 | 29.47 | 29.47 | 29.47 |
| Standard Meter Volume, $ft^3$ | (Vmstd) | 37.477 | 36.171 | 36.074 | 36.574 |
| Standard Water Volume, $ft^3$ | (Vwstd) | 13.523 | 13.453 | 13.716 | 13.564 |
| Moisture Fraction (Measured) | (BWS) | 0.265 | 0.271 | 0.275 | 0.271 |
| Moisture Fraction (lower sat/meas) | (BWS) | 0.265 | 0.271 | 0.275 | 0.271 |
| Mol. Wt. of Dry Gas, lb/lb-mole | (Md) | 30.30 | 30.30 | 30.30 | 30.30 |
| Mol. Wt. of Stack Gas, lb/lb-mole | (Ms) | 27.04 | 26.97 | 26.91 | 26.97 |
| Average Stack Gas Velocity, ft/sec | (Vs) | 80.44 | 80.75 | 80.99 | 80.73 |
| Stack Gas Flow, actual, $ft^3$/min | (Qa) | 424579 | 426224 | 427488 | 426097 |
| Stack Gas Flow, Std , $ft^3$/min | (Qs) | 200213 | 199044 | 198262 | 199173 |
| Isokinetic Sampling Rate, % | (%I) | 104.0 | 100.9 | 101.1 | 102.0 |
| Particulate Conc @ Std Cond, gr/$ft^3$ | (Cs) | 0.0267 | 0.0276 | 0.0257 | 0.0267 |
| Particulate Conc @ 8% $O_2$, gr/$ft^3$ 8 | (Cs @ 8 %O2) | 0.0245 | 0.0253 | 0.0235 | 0.0244 |
| Particulate Emission, lb/hr | (PMR) | 45.8 | 47.2 | 43.7 | 45.6 |
| Particulate Emission Rate, lb/ton ADTP | (ER) | 1.066 | 1.097 | 1.016 | 1.060 |
| Calibration check | (Yqa) | 0.9848 | 0.9854 | 0.9815 | 0.984 |
| Percent difference from Y | | | | | -1.91% |

**Bowater**
**Catawba, SC**

**03917.008.007**
**No. 3 Recovery Boiler**

## EMISSION CALCULATIONS

| | Run 1 | Run 2 | Run 3 | Mean |
|---|---|---|---|---|
| **Date** | 7/26/06 | 7/26/06 | 7/26/06 | --- |
| **Time Began** | 758 | 922 | 1048 | --- |
| **Time Ended** | 858 | 1022 | 1148 | --- |
| Volumetric Flow Rate, (Qs), DSCFM | 2.00E+05 | 1.99E+05 | 1.98E+05 | 1.99E+05 |
| BWS | 0.265 | 0.271 | 0.275 | 0.271 |
| % Oxygen | 6.8 | 6.8 | 6.8 | 6.8 |
| Oxygen Reference Concentration, % | 8.0 | 8.0 | 8.0 | 8.0 |
| Production Rate, units/hr ton ADTP | 43 | 43 | 43 | 43 |
| **Nitrogen Oxides** MW= 46.01 | | | | |
| Concentration, ppm | 55.0 | 54.0 | 56.0 | 55.0 |
| Concentration, ppm @8%O2 | 50.3 | 49.4 | 51.2 | 50.3 |
| Emission Rate, lb/hr | 78.9 | 77.0 | 79.5 | 78.5 |
| Emission Factor, lb/ton ADTP | 1.83 | 1.79 | 1.85 | 1.82 |

CZ 7668

# ISOKINETIC FIELD DATA SHEET

# EPA Method 5 - Particulate (Pulp & Paper)



| | |
|---|---|
| Client | Bowater |
| W.O.# | 03917.008.007 |
| Project ID | — |
| Mode/Source ID | No. 3 RB |
| Samp. Loc. ID | Catawba, SC |
| Run No.ID | 1 |
| Test Method ID | M5 |
| Date ID | 26JUL06 |
| Source/Location | No. 3 Recovery |
| Sample Date | BM 07/26/06 |
| Baro. Press (in Hg) | 29.38 |
| Operator | BM/MS/JW |

**Stack Conditions**

| | Assumed | Actual |
|---|---|---|
| % Moisture | 25 | |
| Impinger Vol (ml) | | 276 |
| Silica gel (g) | | 11.3 |
| CO2, % by Vol | 13 | |
| O2, % by Vol | 6.7 | |
| Temperature (°F) | 345 | |
| Meter Temp (°F) | 82 | |
| Static Press (in $H_2O$) | -1.1 | |
| Ambient Temp (°F) | | |

| | | |
|---|---|---|
| Meter Box ID | A015 | |
| Meter Box Y | 1.003 | |
| Meter Box Del H | 1.783 | |
| Probe ID / Length | PR43 | 12' |
| Probe Material | SS ~~Borosil~~ | |
| Pitot / Thermocouple ID | P73 | |
| Pitot Coefficient | 0.84 | |
| Nozzle ID | AUN 220 | |
| Avg Nozzle Dia (in) | 0.220 | |
| Area of Stack ($ft^2$) | 87.97 | |
| Sample Time | 60 | |
| Total Traverse Pts | 24 | |

K Factor ~~1.09~~ BM 1.05

| Leak Checks | Initial | Mid-Point | Final |
|---|---|---|---|
| Sample Train ($ft^3$) | 0.004 | | 0.006 |
| Leak Check @ (in Hg) | 10 | | 8 |
| Pitot good | yes / no | yes / no | yes / no |
| Orsat good | yes / no | yes / no | yes / no |

| Temp Check | Pre-Test Set | Post-Test Set |
|---|---|---|
| Meter Box Temp | | |
| Reference Temp | | |
| Pass/Fail (+/- 2°) | Pass / Fail | Pass / Fail |
| Temp Change Response ? | yes / no | yes / no |

| TRAVERSE POINT NO. | SAMPLE TIME (min) | CLOCK TIME (military) | VELOCITY PRESSURE Delta P (in H2O) | ORIFICE PRESSURE DROP (in H2O) | DRY GAS METER READING (ft³) | STACK TEMP (°F) | FGM INLET TEMP (°F) | FGM OUTLET TEMP (°F) | PROBE TEMP (°F) | FILTER BOX TEMP (°F) | IMPINGER EXIT TEMP (°F) | SAMPLE TRAIN VAC (in Hg) | EXIT | COMMENTS |
|---|---|---|---|---|---|---|---|---|---|---|---|---|---|---|
| | 0 | 0758 | | | 410.000 | | | | | | | | | |
| A 1 | 2.5 | | 0.99 | 1.04 | 411.6 | ~~345~~ BM 348 | 77 | X | 235 | 243 | 64 | 3 | 231 | |
| 2 | 5 | | 1.4 | 1.47 | 413.0 | 346 | 77 | | 238 | 242 | 60 | 3 | 251 | |
| 3 | 7.5 | | 1.5 | 1.58 | 414.9 | 346 | 77 | | 237 | 239 | 59 | 5 | 261 | |
| 4 | 10 | | 1.2 | 1.26 | 416.4 | 345 | 78 | | 238 | 227 | 58 | 5 | 265 | |
| 5 | 12.5 | | 1.4 | 1.47 | 418.1 | 346 | 78 | | 237 | 208 | 58 | 4 | 267 | |
| 6 | 15 | | 1.2 | 1.26 | 419.7 | 345 | 79 | | 237 | 190 | 58 | 5 | 268 | |
| 7 | 17.5 | | 1.3 | 1.37 | 421.4 | 346 | 79 | | 234 | 179 | 59 | 5 | 268 | |
| 8 | 20 | | 1.3 | 1.37 | 423.0 | 345 | 80 | | 233 | 169 | 60 | 5 | 266 | |
| 9 | 22.5 | | 1.3 | 1.37 | 424.7 | 346 | 81 | | 235 | 162 | 61 | 5 | 265 | |
| 10 | 25 | | 1.2 | 1.26 | 426.3 | 345 | 81 | | 233 | 159 | 61 | 5 | 262 | |
| 11 | 27.5 | | 1.0 | 1.05 | 427.7 | 346 | 82 | | 234 | 158 | 62 | 5 | 261 | |
| 12 | 30 | | 0.81 | 0.85 | 429.031 | 345 | 82 | | 233 | 173 | 63 | 4 | 253 | |
| B 1 | 32.5 | | 1.1 | 1.16 | 430.6 | 344 | 83 | | 228 | 178 | 65 | 4 | 243 | |
| 2 | 35 | | 1.1 | 1.16 | 432.1 | 344 | 83 | | 228 | 175 | 64 | 4 | 248 | |
| 3 | 37.5 | | 1.2 | 1.26 | 433.7 | 345 | 84 | | 228 | 175 | 63 | 5 | 260 | |
| 4 | 40 | | 1.3 | 1.37 | 435.3 | 346 | 84 | | 231 | 169 | 64 | 5 | 263 | |
| 5 | 42.5 | | 1.2 | 1.26 | 436.9 | 345 | 85 | | 229 | 160 | 62 | 5 | 264 | |
| 6 | 45 | | 1.2 | 1.26 | 438.6 | 346 | 84 | | 229 | 161 | 62 | 5 | 266 | |
| 7 | 47.5 | | 1.4 | 1.47 | 440.3 | 345 | 85 | | 227 | 156 | 63 | 5 | 265 | |
| 8 | 50 | | 1.4 | 1.47 | 442.0 | 346 | 86 | | 225 | 151 | 63 | 5 | 264 | |
| 9 | 52.5 | | 1.5 | 1.58 | 443.8 | 346 | 86 | | 225 | 153 | 64 | 5 | 262 | |
| 10 | 55 | | 1.5 | 1.58 | 445.6 | 346 | 87 | | 225 | 152 | 64 | 5 | 263 | |
| 11 | 57.5 | | 1.3 | 1.37 | 447.3 | 346 | 87 | | 225 | 152 | 65 | 6 | 261 | |
| 12 | 60 | 0902 | 0.99 | 1.04 | 448.963 | 345 | 88 | | 227 | 151 | 65 | 5 | 258 | |
| | | | Avg Sqrt Delta P | Avg Delta H | Total Volume | Avg Ts | Avg Tm | | Min/Max | Min/Max | Max Temp | Max Vac | Max Temp | |
| | | | 1.1118 | 1.3054 | 38.963 | 345.4 | 82.2 | | | | | | | |

1.2413

Avg Sqrt Del H 1.1395

Comments:

ISO 163.98

MOIST 26.5

WESTON MANAGERS DESIGNERS/CONSULTANTS

CZ ~~7669~~ Bm
7671

# ISOKINETIC FIELD DATA SHEET

# EPA Method 5 - Particulate (Pulp & Paper)

Page 1 of 1

| | | Stack Conditions | Assumed | Actual |
|---|---|---|---|---|
| Client | Bowater | | | |
| W.O.# | 03917.008.007 | | | |
| Project ID | — | % Moisture | 25 | |
| Mode/Source ID | No. 3 RB | Impinger Vol (ml) | | 276 |
| Samp. Loc. ID | Catawba, SC | Silica gel (g) | | 9.8 |
| Run No.ID | 2 | CO2, % by Vol | 13 | |
| Test Method ID | M5 | O2, % by Vol | 4.7 | |
| Date ID | 26JUL06 | Temperature (°F) | 345 | |
| Source/Location | No. 3 Recovery | Meter Temp (°F) | | |
| Sample Date | 07/26/06 | Static Press (in $H_2O$) | -1.1 | |
| Baro. Press (in Hg) | 29.38 | | | |
| Operator | Bm / MS / JW | Ambient Temp (°F) | | |

| | | | |
|---|---|---|---|
| Meter Box ID | A015 | | |
| Meter Box Y | 1.003 | | |
| Meter Box Del H | 1.783 | | |
| Probe ID / Length | PR43 | 12' | |
| Probe Material | SS ~~Boro~~ | | |
| Pitot / Thermocouple ID | P73 | | |
| Pitot Coefficient | 0.84 | | |
| Nozzle ID | AUN 220 | | |
| Avg Nozzle Dia (in) | 0.220 | | |
| Area of Stack ($ft^2$) | 87.97 | | |
| Sample Time | 60 | | |
| Total Traverse Pts | 24 | | |

K Factor 1.00

| Leak Checks | Initial | Mid-Point | Final |
|---|---|---|---|
| Sample Train ($ft^3$) | 0.010 | | 0.007 |
| Leak Check @ (in Hg) | 10 | | 8 |
| Pitot good | yes / no | yes / no | yes / no |
| Orsat good | yes / no | yes / no | yes / no |

| Temp Check | Pre-Test Set | Post-Test Set |
|---|---|---|
| Meter Box Temp | | |
| Reference Temp | | |
| Pass/Fail (+/- 2°) | Pass / Fail | Pass / Fail |
| Temp Change Response ? | yes / no | yes / no |

| TRAVERSE POINT No. | SAMPLE TIME (min) | CLOCK TIME (24hr time) | VELOCITY PRESSURE Delta P (in $H_2O$) | ORIFICE PRESSURE Delta H (in $H_2O$) | DRY GAS METER READING (ft³) | STACK TEMP (°F) | DGM INLET TEMP (°F) | FLOW CELL TEMP (°F) | PROBE TEMP (°F) | FILTER BOX TEMP (°F) | IMPING EXIT TEMP (°F) | SAMPLE TRAIN VAC (in Hg) | EXIT | COMMENTS |
|---|---|---|---|---|---|---|---|---|---|---|---|---|---|---|
| | 0 | 0922 | | | 450.200 | | | | | | | | | |
| B 1 | 2.5 | | 0.96 | 0.96 | 451.7 | 343 | 89 | X | 241 | 227 | 65 | 3 | 228 | |
| 2 | 5 | | 1.0 | 1.00 | 453.1 | 345 | 90 | | 230 | 205 | 62 | 3 | 230 | |
| 3 | 7.5 | | 1.2 | 1.20 | 454.6 | 347 | 90 | | 232 | 184 | 60 | 3 | 234 | |
| 4 | 10 | | 1.2 | 1.2 | 456.2 | 346 | 91 | | 230 | 167 | 61 | 4 | 237 | |
| 5 | 12.5 | | 1.2 | 1.2 | 457.8 | 347 | 91 | | 229 | 155 | 61 | 4 | 242 | |
| 6 | 15 | | 1.2 | 1.2 | 459.4 | 347 | 92 | | 230 | 152 | 59 | 4 | 253 | |
| 7 | 17.5 | | 1.3 | 1.3 | 461.0 | 350 | 93 | | 228 | 141 | 58 | 4 | 255 | |
| 8 | 20 | | 1.5 | 1.5 | 462.7 | 348 | 92 | | 230 | 137 | 58 | 5 | 256 | |
| 9 | 22.5 | | ~~Bm 1.4~~ 1.5 | ~~Bm 1.4~~ 1.5 | 464.5 | 348 | 93 | | 228 | 133 | 57 | 5 | 257 | |
| 10 | 25 | | 1.5 | 1.5 | 466.2 | 348 | 93 | | 229 | 131 | 57 | 5 | 253 | |
| 11 | 27.5 | | 1.4 | 1.4 | 467.9 | 347 | 94 | | 228 | 130 | 56 | 5 | 247 | |
| 12 | 30 | | 1.0 | 1.0 | 469.4 | 347 | 94 | | 229 | 132 | 57 | 5 | 243 | |
| A 1 | 32.5 | | 1.2 | 1.2 | 470.9 | 344 | 95 | | 234 | 133 | 61 | 4 | 226 | |
| 2 | 35 | | 1.4 | 1.4 | 472.6 | 346 | 95 | | 234 | 133 | 59 | 4 | 230 | |
| 3 | 37.5 | | 1.5 | 1.5 | 474.4 | 346 | 95 | | 233 | 132 | 57 | 5 | 239 | |
| 4 | 40 | | 1.3 | 1.3 | 476.0 | 346 | 96 | | 232 | 132 | 57 | 5 | 245 | |
| 5 | 42.5 | | 1.4 | 1.4 | 477.7 | 347 | 96 | | 234 | 132 | 57 | 5 | 248 | |
| 6 | 45 | | 1.2 | 1.2 | 479.3 | 347 | 97 | | 233 | 132 | 57 | 5 | 249 | |
| 7 | 47.5 | | 1.3 | 1.3 | 480.9 | 347 | 97 | | 233 | 132 | 59 | 5 | 246 | |
| 8 | 50 | | 1.3 | 1.3 | 482.6 | 347 | 98 | | 231 | 131 | 59 | 5 | 247 | |
| 9 | 52.5 | | 1.3 | 1.3 | 484.2 | 347 | 98 | | 233 | 130 | 59 | 5 | 244 | |
| 10 | 55 | | 1.2 | 1.2 | 485.8 | 347 | 98 | | 232 | 130 | 58 | 5 | 239 | |
| 11 | 57.5 | | 0.97 | 0.97 | 487.3 | 347 | 99 | | 230 | 130 | 59 | 5 | 236 | |
| 12 | 60 | 1024 | 0.86 | 0.86 | 488.657 | 347 | 100 | | 231 | 130 | 59 | 5 | 234 | |
| | | | Avg Sqrt Delta P | Avg Delta H | Total Volume | Avg Ts | Avg Tm | | Min/Max | Min/Max | Max Temp | Max Vac | Max Temp | |
| | | | 1.1129 | 1.2454 | 38.457 | 346.7 | 94.4 | | | | | | | |
| | | | Avg 1.2454 | Avg Sqrt Del H 1.1129 | | | | | | | | | | |

WESTON MANAGERS DESIGNERS/CONSULTANTS

Comments: Filter 7669 did not leak check so changed to 7671

150 101.0
MOIST 27.1

Bd

CZ 7670

# ISOKINETIC FIELD DATA SHEET

# EPA Method 5 - Particulate (Pulp & Paper)



| | | | Stack Conditions | | | | | | |
|---|---|---|---|---|---|---|---|---|---|
| Client | Bowater | | Assumed | Actual | Meter Box ID | X015 | | K Factor | 1.00 |
| W.O.# | 03917.008.007 | | | | Meter Box Y | 1.003 | | | |
| Project ID | — | % Moisture | 25.5 | | Meter Box Del H | 1.785 | **Leak Checks** | Initial | Mid-Point / Final |
| Mode/Source ID | No. 3 RB | Impinger Vol (ml) | | 282 | Probe ID / Length | PR43 / 12' | Sample Train (ft³) | 0.014 | / 0.010 |
| Samp. Loc. ID | Catawba, SC | Silica gel (g) | | 9.4 | Probe Material | SS ~~Bard~~ | Leak Check @ (in Hg) | 10 | / 8 |
| Run No.ID | 3 | CO2, % by Vol | 13 | | Pitot / Thermocouple ID | P73 | Pitot good | yes / no | yes / no / yes / no |
| Test Method ID | M5 | O2, % by Vol | 6.7 | | Pitot Coefficient | 0.84 | Orsat good | yes / no | yes / no / yes / no |
| Date ID | 26JUL06 | Temperature (°F) | 345 | | Nozzle ID | AUN 220 | **Temp Check** | Pre-Test Set | Post-Test Set |
| Source/Location | No. 3 Recovery | Meter Temp (°F) | | | Avg Nozzle Dia (in) | 0.220 | Meter Box Temp | | |
| Sample Date | 07/26/06 | Static Press (in $H_2O$) | -1.1 | | Area of Stack (ft²) | 87.97 | Reference Temp | | |
| Baro. Press (in Hg) | 29.38 | | | | Sample Time | 60 | Pass/Fail (+/- 2°) | Pass / Fail | Pass / Fail |
| Operator | BM/MS/JW | Ambient Temp (°F) | | | Total Traverse Pts | 24 | Temp Change Response ? | yes / no | yes / no |

| TRAVERSE POINT NO | SAMPLE TIME (min) | CLOCK TIME (military time) | VELOCITY PRESSURE (delta P) (in H2O) | ORIFICE PRESSURE (delta H) (in H2O) | DRY GAS METER READING (ft³) | STACK TEMP (°F) | DGM INLET TEMP (°F) | DGM OUTLET TEMP (°F) | PROBE TEMP (°F) | FILTER BOX TEMP (°F) | IMPINGER OUTLET TEMP (°F) | SAMPLE TRAIN VAC (in Hg) | EXIT | COMMENTS |
|---|---|---|---|---|---|---|---|---|---|---|---|---|---|---|
| | 0 | 1050 | | | 490.800 | | | | | | | | | |
| A 1 | 2.5 | | ~~0.97~~ 0.97 | ~~0.97~~ 0.97 | 492.2 | 345 | 101 | X | 234 | 178 | 67 | 3 | 227 | |
| 2 | 5 | | 1.3 | 1.3 | 494.0 | 347 | 102 | | 233 | 171 | 64 | 3 | 229 | |
| 3 | 7.5 | | 1.1 | 1.1 | 495.4 | 350 | 102 | | 232 | 182 | 59 | 3 | 231 | |
| 4 | 10 | | 1.3 | 1.3 | 497.1 | 347 | 104 | | 233 | 185 | 59 | 4 | 234 | |
| 5 | 12.5 | | 1.5 | 1.5 | 498.8 | 347 | 103 | | 235 | 192 | 59 | 4 | 236 | |
| 6 | 15 | | 1.1 | 1.1 | 500.3 | 347 | 104 | | 234 | 191 | 59 | 5 | 238 | |
| 7 | 17.5 | | 1.3 | 1.3 | 502.0 | 348 | 104 | | 233 | 184 | 60 | 5 | 237 | |
| 8 | 20 | | 1.4 | 1.4 | 503.7 | 347 | 104 | | 235 | 183 | 61 | 5 | 237 | |
| 9 | 22.5 | | 1.3 | 1.3 | 505.4 | 348 | 105 | | 231 | 183 | 62 | 5 | 238 | |
| 10 | 25 | | 1.3 | 1.3 | 507.0 | 348 | 105 | | 233 | 186 | 62 | 5 | 238 | |
| 11 | 27.5 | | 1.1 | 1.1 | 508.5 | 348 | 105 | | 233 | 184 | 63 | 5 | 236 | |
| 12 | 30 | | 0.96 | 0.96 | 510.004 | 348 | 105 | | 232 | 182 | 63 | 4 | 231 | |
| B 1 | 32.5 | | 1.1 | 1.1 | 511.5 | 346 | 104 | | 234 | 195 | 65 | 4 | 225 | |
| 2 | 35 | | 1.2 | 1.2 | 513.1 | 348 | 104 | | 233 | 237 | 63 | 4 | 227 | |
| 3 | 37.5 | | 1.2 | 1.2 | 514.7 | 349 | 104 | | 232 | 225 | 64 | 5 | 238 | |
| 4 | 40 | | 1.2 | 1.2 | 516.3 | 349 | 104 | | 234 | 216 | 64 | 5 | 246 | |
| 5 | 42.5 | | 1.2 | 1.2 | 517.9 | 349 | 104 | | 236 | 197 | 64 | 5 | 252 | |
| 6 | 45 | | 1.2 | 1.2 | 519.5 | 348 | 103 | | 233 | 197 | 65 | 5 | 254 | |
| 7 | 47.5 | | 1.3 | 1.3 | 521.2 | 348 | 103 | | 236 | 194 | 65 | 5 | 254 | |
| 8 | 50 | | 1.5 | 1.5 | 523.0 | 347 | 103 | | 235 | 196 | 65 | 5 | 252 | |
| 9 | 52.5 | | 1.5 | 1.5 | 524.7 | 347 | 103 | | 234 | 208 | 66 | 5 | 251 | |
| 10 | 55 | | 1.4 | 1.4 | 526.4 | 346 | 103 | | 235 | 198 | 65 | 5 | 250 | |
| 11 | 57.5 | | 1.4 | 1.4 | 528.2 | 346 | 103 | | 232 | 197 | 65 | 5 | 246 | |
| 12 | 60 | 1052 | 1.1 | 1.1 | 529.784 | 345 | 103 | | 233 | 196 | 64 | 5 | 242 | |
| | | | Avg Sqrt Delta P | Avg Delta H | Total Volume | Avg Ts | Avg Tm | | Min/Max | Min/Max | Max Temp | Max Vac | Max Temp | |
| | | | 1.1146 | 1.2471 | 38.984 | 347.4 | 103.5 | | | | | | | |
| | | | AVG 1.2471 | Avg Sqrt Del H 1.1146 | Comments: | | | | | | | | | |

150 101.1

MOST 27.5

NA

WESTON MANAGERS DESIGNERS/CONSULTANTS

# SAMPLE RECOVERY FIELD DATA

EPA Method 5 - Particulate (Pulp & Paper)

Client: Bowater | W.O. #: 03917.008.007
Location/Plant: Catawba, SC | Source & Location: No. 3 Recovery

**Run No.** 1 | Sample Date 07/26/06 | Recovery Date 07/26/06

Sample I.D. - - - 1 - M5 - 26JUL~~2000~~ 2006 | Analyst BM | Filter Number 7668

| | Impinger | | | | | | | | | |
|---|---|---|---|---|---|---|---|---|---|---|
| | 1 | 2 | 3 | 4 | 5 | 6 | 7 | Imp.Total | 8 | Total |
| **Contents** | Di H20 | Di H20 | Empty | | | | | | Silica Gel | |
| **Final** | 354 | 122 | | | | | | 476 | 340.7 | |
| **Initial** | 100 | 100 | | | | | | 200 | 329.4 ~~300~~ | |
| **Gain** | 254 | 22 | | | | | | 276 | 11.3 | 287.3 |

Impinger Color _____ | Labeled? _____

Silica Gel Condition _____ | Sealed? _____

**Run No.** 2 | Sample Date 07/26/06 | Recovery Date 07/26/06

Sample I.D. - - - 2 - M5 - 26JUL~~2000~~ 2006 | Analyst BM | Filter Number 7671 ~~7669~~

| | Impinger | | | | | | | | | |
|---|---|---|---|---|---|---|---|---|---|---|
| | 1 | 2 | 3 | 4 | 5 | 6 | 7 | Imp.Total | 8 | Total |
| **Contents** | Di H20 | Di H20 | Empty | | | | | | Silica Gel | |
| **Final** | 342 | 134 | | | | | | 476 | 332.0 | |
| **Initial** | 100 | 100 | | | | | | 200 | 322.2 ~~300~~ | |
| **Gain** | 242 | 34 | | | | | | 276 | 9.8 | 285.8 |

Impinger Color _____ | Labeled? _____

Silica Gel Condition _____ | Sealed? _____

**Run No.** 3 | Sample Date 07/26/06 | Recovery Date 07/26/06

Sample I.D. - - - 3 - M5 - 26JUL~~2000~~ 2006 | Analyst BM | Filter Number 7670

| | Impinger | | | | | | | | | |
|---|---|---|---|---|---|---|---|---|---|---|
| | 1 | 2 | 3 | 4 | 5 | 6 | 7 | Imp.Total | 8 | Total |
| **Contents** | Di H20 | Di H20 | Empty | | | | | | Silica Gel | |
| **Final** | 340 | 142 | | | | | | 482 | 341.4 | |
| **Initial** | 100 | 100 | | | | | | 200 | 332.0 ~~300~~ | |
| **Gain** | 240 | 42 | | | | | | 282 | 9.4 | 291.4 |

Impinger Color _____ | Labeled? _____

Silica Gel Condition _____ | Sealed? _____

Check COC for Sample IDs of Media Blanks

WESTON MANAGERS DESIGNERS/CONSULTANTS

# RUN SUMMARY

Number 1

| | | | |
|---|---|---|---|
| Client: | **Bowater** | Project Number: | **03917.008.007** |
| Location: | **Catawba, SC** | Operator: | **T. Simpkins** |
| Source: | **No. 3 Recovery** | Date: | **26 Jul 2006** |
| Calibration: | **1** | | |

| **Analyzer** | O2 | CO2 | NOx |
|---|---|---|---|
| **Method** | EPA 3A | EPA 3A | EPA 7E |
| **Conc. Units** | % | % | ppm |

**Time: 07:58 to 08:58**

**Run Averages**

| | | |
|---|---|---|
| 6.8 | 12.6 | 53 |

**Pre-run Bias at 07:53**

| | | | |
|---|---|---|---|
| **Zero Bias** | 0.1 | 0.1 | 1 |
| **Span Bias** | 10.0 | 9.8 | 131 |
| **Span Gas** | 10.1 | 9.9 | 136 |

**Post-run Bias at 09:05**

| | | | |
|---|---|---|---|
| **Zero Bias** | 0.1 | 0.2 | -1 |
| **Span Bias** | 10.0 | 9.9 | 131 |
| **Span Gas** | 10.1 | 9.9 | 136 |

**Run averages corrected for the average of the pre-run and post-run bias**

| | | |
|---|---|---|
| 6.8 | 12.7 | 55 |

WESTON SOLUTIONS

# RUN SUMMARY

Number 2

| | | | |
|---|---|---|---|
| Client: | **Bowater** | Project Number: | **03917.008.007** |
| Location: | **Catawba, SC** | Operator: | **T. Simpkins** |
| Source: | **No. 3 Recovery** | Date: | **26 Jul 2006** |
| Calibration: | **1** | | |

| **Analyzer** | O2 | CO2 | NOx |
|---|---|---|---|
| **Method** | EPA 3A | EPA 3A | EPA 7E |
| **Conc. Units** | % | % | ppm |

**Time: 09:22 to 10:22**

**Run Averages**

| | | |
|---|---|---|
| 6.8 | 12.6 | 51 |

**Pre-run Bias at 09:05**

| | | | |
|---|---|---|---|
| **Zero Bias** | 0.1 | 0.2 | -1 |
| **Span Bias** | 10.0 | 9.9 | 131 |
| **Span Gas** | 10.1 | 9.9 | 136 |

**Post-run Bias at 10:25**

| | | | |
|---|---|---|---|
| **Zero Bias** | 0.1 | 0.2 | -1 |
| **Span Bias** | 10.0 | 9.9 | 131 |
| **Span Gas** | 10.1 | 9.9 | 136 |

**Run averages corrected for the average of the pre-run and post-run bias**

| | | |
|---|---|---|
| 6.8 | 12.7 | 54 |

WESTON SOLUTIONS

# RUN SUMMARY

Number 3

| | | | |
|---|---|---|---|
| Client: | **Bowater** | Project Number: | **03917.008.007** |
| Location: | **Catawba, SC** | Operator: | **T. Simpkins** |
| Source: | **No. 3 Recovery** | Date: | **26 Jul 2006** |
| Calibration: | **1** | | |

| **Analyzer** | O2 | CO2 | NOx |
|---|---|---|---|
| **Method** | EPA 3A | EPA 3A | EPA 7E |
| **Conc. Units** | % | % | ppm |

**Time: 10:48 to 11:48**

**Run Averages**

| | | |
|---|---|---|
| 6.8 | 12.6 | 54 |

**Pre-run Bias at 10:25**

| | | | |
|---|---|---|---|
| **Zero Bias** | 0.1 | 0.2 | -1 |
| **Span Bias** | 10.0 | 9.9 | 131 |
| **Span Gas** | 10.1 | 9.9 | 136 |

**Post-run Bias at 11:51**

| | | | |
|---|---|---|---|
| **Zero Bias** | 0.1 | 0.2 | 0 |
| **Span Bias** | 10.0 | 9.9 | 132 |
| **Span Gas** | 10.1 | 9.9 | 136 |

**Run averages corrected for the average of the pre-run and post-run bias**

| | | |
|---|---|---|
| 6.8 | 12.7 | 56 |

WESTON SOLUTIONS

# RUN DATA

Number 1

| | | | |
|---|---|---|---|
| Client: | **Bowater** | Project Number: | **03917.008.007** |
| Location: | **Catawba, SC** | Operator: | **T. Simpkins** |
| Source: | **No. 3 Recovery** | Date: | **26 Jul 2006** |
| Calibration: | **1** | | |

| Time | O2 | | CO2 | | NOx | |
|---|---|---|---|---|---|---|
| | mv | % | mv | % | mv | ppm |
| | | Starting time 07:58 | | | | |
| 07:59 | 2753 | 6.7 | 5093 | 12.6 | 1610 | 54 |
| 08:00 | 2743 | 6.7 | 5107 | 12.7 | 1587 | 54 |
| 08:01 | 2782 | 6.8 | 5065 | 12.6 | 1607 | 54 |
| 08:02 | 2671 | 6.5 | 5176 | 12.8 | 1594 | 54 |
| 08:03 | 2736 | 6.7 | 5115 | 12.7 | 1590 | 54 |
| 08:04 | 2728 | 6.6 | 5124 | 12.7 | 1587 | 54 |
| 08:05 | 2809 | 6.8 | 5048 | 12.5 | 1567 | 53 |
| 08:06 | 2770 | 6.7 | 5092 | 12.6 | 1585 | 54 |
| 08:07 | 2829 | 6.9 | 5029 | 12.5 | 1561 | 53 |
| 08:08 | 2764 | 6.7 | 5089 | 12.6 | 1547 | 52 |
| 08:09 | 2769 | 6.7 | 5081 | 12.6 | 1549 | 52 |
| 08:10 | 2733 | 6.6 | 5132 | 12.7 | 1544 | 52 |
| 08:11 | 2756 | 6.7 | 5104 | 12.7 | 1499 | 51 |
| 08:12 | 2724 | 6.6 | 5136 | 12.7 | 1417 | 48 |
| 08:13 | 2713 | 6.6 | 5149 | 12.8 | 1422 | 48 |
| 08:14 | 2787 | 6.8 | 5081 | 12.6 | 1438 | 49 |
| 08:15 | 2770 | 6.7 | 5098 | 12.6 | 1457 | 50 |
| 08:16 | 2813 | 6.8 | 5053 | 12.5 | 1450 | 49 |
| 08:17 | 2739 | 6.7 | 5128 | 12.7 | 1432 | 49 |
| 08:18 | 2779 | 6.8 | 5096 | 12.6 | 1435 | 49 |
| 08:19 | 2815 | 6.8 | 5059 | 12.5 | 1448 | 49 |
| 08:20 | 2824 | 6.9 | 5048 | 12.5 | 1484 | 50 |
| 08:21 | 2729 | 6.6 | 5148 | 12.8 | 1467 | 50 |
| 08:22 | 2803 | 6.8 | 5077 | 12.6 | 1460 | 50 |
| 08:23 | 2827 | 6.9 | 5050 | 12.5 | 1457 | 50 |
| 08:24 | 2843 | 6.9 | 5038 | 12.5 | 1503 | 51 |
| 08:25 | 2763 | 6.7 | 5114 | 12.7 | 1490 | 51 |
| 08:26 | 2805 | 6.8 | 5084 | 12.6 | 1516 | 51 |
| 08:27 | 2819 | 6.9 | 5066 | 12.6 | 1549 | 52 |
| 08:28 | 2828 | 6.9 | 5068 | 12.6 | 1554 | 53 |
| 08:29 | 2763 | 6.7 | 5112 | 12.7 | 1433 | 49 |
| 08:30 | 2762 | 6.7 | 5117 | 12.7 | 1448 | 49 |

WESTON SOLUTIONS

# RUN DATA

Number 1

| | | | |
|---|---|---|---|
| Client: | **Bowater** | Project Number: | **03917.008.007** |
| Location: | **Catawba, SC** | Operator: | **T. Simpkins** |
| Source: | **No. 3 Recovery** | Date: | **26 Jul 2006** |
| Calibration: | **1** | | |

| Time | O2 | | CO2 | | NOx | |
|---|---|---|---|---|---|---|
| | mv | % | mv | % | mv | ppm |
| 08:31 | 2777 | 6.8 | 5107 | 12.7 | 1507 | 51 |
| 08:32 | 2761 | 6.7 | 5129 | 12.7 | 1540 | 52 |
| 08:33 | 2743 | 6.7 | 5137 | 12.7 | 1542 | 52 |
| 08:34 | 2758 | 6.7 | 5118 | 12.7 | 1525 | 52 |
| 08:35 | 2746 | 6.7 | 5129 | 12.7 | 1531 | 52 |
| 08:36 | 2780 | 6.8 | 5096 | 12.6 | 1522 | 52 |
| 08:37 | 2751 | 6.7 | 5116 | 12.7 | 1550 | 52 |
| 08:38 | 2734 | 6.6 | 5136 | 12.7 | 1566 | 53 |
| 08:39 | 2828 | 6.9 | 5052 | 12.5 | 1551 | 53 |
| 08:40 | 2843 | 6.9 | 5039 | 12.5 | 1617 | 55 |
| 08:41 | 2805 | 6.8 | 5065 | 12.6 | 1613 | 54 |
| 08:42 | 2871 | 7.0 | 5000 | 12.4 | 1622 | 55 |
| 08:43 | 2844 | 6.9 | 5030 | 12.5 | 1625 | 55 |
| 08:44 | 2907 | 7.1 | 4977 | 12.3 | 1635 | 55 |
| 08:45 | 2912 | 7.1 | 4967 | 12.3 | 1630 | 55 |
| 08:46 | 2818 | 6.9 | 5059 | 12.5 | 1621 | 55 |
| 08:47 | 2840 | 6.9 | 5044 | 12.5 | 1599 | 54 |
| 08:48 | 2861 | 7.0 | 5024 | 12.5 | 1597 | 54 |
| 08:49 | 2746 | 6.7 | 5154 | 12.8 | 1620 | 55 |
| 08:50 | 2780 | 6.8 | 5111 | 12.7 | 1606 | 54 |
| 08:51 | 2845 | 6.9 | 5044 | 12.5 | 1599 | 54 |
| 08:52 | 2843 | 6.9 | 5049 | 12.5 | 1595 | 54 |
| 08:53 | 2863 | 7.0 | 5031 | 12.5 | 1615 | 55 |
| 08:54 | 2783 | 6.8 | 5101 | 12.7 | 1619 | 55 |
| 08:55 | 2795 | 6.8 | 5088 | 12.6 | 1611 | 54 |
| 08:56 | 2865 | 7.0 | 5023 | 12.5 | 1621 | 55 |
| 08:57 | 2872 | 7.0 | 5007 | 12.4 | 1688 | 57 |
| 08:58 | 2871 | 7.0 | 5008 | 12.4 | 1721 | 58 |
| **Run Avg** | **2793** | **6.8** | **5080** | **12.6** | **1550** | **53** |

WESTON SOLUTIONS

# RUN DATA

Number 2

| | | | |
|---|---|---|---|
| Client: | **Bowater** | Project Number: | **03917.008.007** |
| Location: | **Catawba, SC** | Operator: | **T. Simpkins** |
| Source: | **No. 3 Recovery** | Date: | **26 Jul 2006** |
| Calibration: | **1** | | |

| Time | O2 | | CO2 | | NOx | |
|---|---|---|---|---|---|---|
| | mv | % | mv | % | mv | ppm |
| | | | Starting time 09:22 | | | |
| 09:23 | 2830 | 6.9 | 5048 | 12.5 | 1653 | 56 |
| 09:24 | 2869 | 7.0 | 5008 | 12.4 | 1615 | 55 |
| 09:25 | 2857 | 7.0 | 5022 | 12.5 | 1604 | 54 |
| 09:26 | 2810 | 6.8 | 5062 | 12.6 | 1628 | 55 |
| 09:27 | 2809 | 6.8 | 5060 | 12.6 | 1642 | 55 |
| 09:28 | 2765 | 6.7 | 5106 | 12.7 | 1585 | 54 |
| 09:29 | 2848 | 6.9 | 5021 | 12.5 | 1559 | 53 |
| 09:30 | 2877 | 7.0 | 4992 | 12.4 | 1504 | 51 |
| 09:31 | 2850 | 6.9 | 5015 | 12.4 | 1491 | 51 |
| 09:32 | 2793 | 6.8 | 5070 | 12.6 | 1526 | 52 |
| 09:33 | 2792 | 6.8 | 5076 | 12.6 | 1520 | 52 |
| 09:34 | 2831 | 6.9 | 5040 | 12.5 | 1519 | 52 |
| 09:35 | 2853 | 6.9 | 5016 | 12.4 | 1512 | 51 |
| 09:36 | 2853 | 6.9 | 5019 | 12.4 | 1510 | 51 |
| 09:37 | 2831 | 6.9 | 5035 | 12.5 | 1520 | 52 |
| 09:38 | 2879 | 7.0 | 4993 | 12.4 | 1514 | 51 |
| 09:39 | 2881 | 7.0 | 4993 | 12.4 | 1528 | 52 |
| 09:40 | 2830 | 6.9 | 5042 | 12.5 | 1535 | 52 |
| 09:41 | 2750 | 6.7 | 5118 | 12.7 | 1554 | 53 |
| 09:42 | 2793 | 6.8 | 5084 | 12.6 | 1602 | 54 |
| 09:43 | 2809 | 6.8 | 5076 | 12.6 | 1556 | 53 |
| 09:44 | 2744 | 6.7 | 5134 | 12.7 | 1632 | 55 |
| 09:45 | 2689 | 6.5 | 5188 | 12.9 | 1659 | 56 |
| 09:46 | 2708 | 6.6 | 5173 | 12.8 | 1678 | 57 |
| 09:47 | 2761 | 6.7 | 5108 | 12.7 | 1580 | 53 |
| 09:48 | 2724 | 6.6 | 5155 | 12.8 | 1554 | 53 |
| 09:49 | 2721 | 6.6 | 5153 | 12.8 | 1498 | 51 |
| 09:50 | 2732 | 6.6 | 5144 | 12.8 | 1525 | 52 |
| 09:51 | 2736 | 6.7 | 5142 | 12.8 | 1507 | 51 |
| 09:52 | 2808 | 6.8 | 5070 | 12.6 | 1484 | 50 |
| 09:53 | 2684 | 6.5 | 5181 | 12.9 | 1470 | 50 |
| 09:54 | 2749 | 6.7 | 5124 | 12.7 | 1476 | 50 |

WESTON SOLUTIONS

# RUN DATA

Number 2

| | | | |
|---|---|---|---|
| Client: | **Bowater** | Project Number: | **03917.008.007** |
| Location: | **Catawba, SC** | Operator: | **T. Simpkins** |
| Source: | **No. 3 Recovery** | Date: | **26 Jul 2006** |
| Calibration: | **1** | | |

| Time | O2 | | CO2 | | NOx | |
|---|---|---|---|---|---|---|
| | mv | % | mv | % | mv | ppm |
| 09:55 | 2834 | 6.9 | 5030 | 12.5 | 1475 | 50 |
| 09:56 | 2842 | 6.9 | 5025 | 12.5 | 1485 | 50 |
| 09:57 | 2753 | 6.7 | 5115 | 12.7 | 1446 | 49 |
| 09:58 | 2806 | 6.8 | 5064 | 12.6 | 1450 | 49 |
| 09:59 | 2931 | 7.1 | 4945 | 12.3 | 1447 | 49 |
| 10:00 | 2876 | 7.0 | 4992 | 12.4 | 1503 | 51 |
| 10:01 | 2773 | 6.7 | 5095 | 12.6 | 1491 | 51 |
| 10:02 | 2815 | 6.8 | 5052 | 12.5 | 1470 | 50 |
| 10:03 | 2777 | 6.8 | 5100 | 12.7 | 1499 | 51 |
| 10:04 | 2828 | 6.9 | 5040 | 12.5 | 1508 | 51 |
| 10:05 | 2774 | 6.7 | 5094 | 12.6 | 1482 | 50 |
| 10:06 | 2724 | 6.6 | 5155 | 12.8 | 1477 | 50 |
| 10:07 | 2823 | 6.9 | 5055 | 12.5 | 1457 | 50 |
| 10:08 | 2840 | 6.9 | 5040 | 12.5 | 1468 | 50 |
| 10:09 | 2858 | 7.0 | 5010 | 12.4 | 1478 | 50 |
| 10:10 | 2821 | 6.9 | 5045 | 12.5 | 1483 | 50 |
| 10:11 | 2866 | 7.0 | 5009 | 12.4 | 1469 | 50 |
| 10:12 | 2828 | 6.9 | 5056 | 12.5 | 1485 | 50 |
| 10:13 | 2799 | 6.8 | 5075 | 12.6 | 1488 | 51 |
| 10:14 | 2781 | 6.8 | 5091 | 12.6 | 1487 | 51 |
| 10:15 | 2806 | 6.8 | 5078 | 12.6 | 1456 | 50 |
| 10:16 | 2812 | 6.8 | 5086 | 12.6 | 1447 | 49 |
| 10:17 | 2781 | 6.8 | 5107 | 12.7 | 1447 | 49 |
| 10:18 | 2845 | 6.9 | 5048 | 12.5 | 1461 | 50 |
| 10:19 | 2827 | 6.9 | 5053 | 12.5 | 1343 | 46 |
| 10:20 | 2819 | 6.9 | 5057 | 12.5 | 1398 | 48 |
| 10:21 | 2775 | 6.7 | 5103 | 12.7 | 1529 | 52 |
| 10:22 | 2710 | 6.6 | 5170 | 12.8 | 1441 | 49 |
| **Run Avg** | **2803** | **6.8** | **5071** | **12.6** | **1514** | **51** |

# RUN DATA

Number 3

| | | | |
|---|---|---|---|
| Client: | **Bowater** | Project Number: | **03917.008.007** |
| Location: | **Catawba, SC** | Operator: | **T. Simpkins** |
| Source: | **No. 3 Recovery** | Date: | **26 Jul 2006** |
| Calibration: | **1** | | |

| Time | O2 | | CO2 | | NOx | |
|---|---|---|---|---|---|---|
| | mv | % | mv | % | mv | ppm |
| | | Starting time 10:48 | | | | |
| 10:49 | 2948 | 7.2 | 4929 | 12.2 | 1652 | 56 |
| 10:50 | 2908 | 7.1 | 4977 | 12.3 | 1669 | 56 |
| 10:51 | 2666 | 6.5 | 5220 | 12.9 | 1626 | 55 |
| 10:52 | 2725 | 6.6 | 5182 | 12.9 | 1643 | 55 |
| 10:53 | 2765 | 6.7 | 5139 | 12.7 | 1636 | 55 |
| 10:54 | 2770 | 6.7 | 5136 | 12.7 | 1625 | 55 |
| 10:55 | 2703 | 6.6 | 5197 | 12.9 | 1625 | 55 |
| 10:56 | 2790 | 6.8 | 5110 | 12.7 | 1588 | 54 |
| 10:57 | 2797 | 6.8 | 5096 | 12.6 | 1589 | 54 |
| 10:58 | 2844 | 6.9 | 5047 | 12.5 | 1658 | 56 |
| 10:59 | 2781 | 6.8 | 5108 | 12.7 | 1561 | 53 |
| 11:00 | 2830 | 6.9 | 5059 | 12.5 | 1590 | 54 |
| 11:01 | 2892 | 7.0 | 4997 | 12.4 | 1596 | 54 |
| 11:02 | 2877 | 7.0 | 5011 | 12.4 | 1594 | 54 |
| 11:03 | 2814 | 6.8 | 5072 | 12.6 | 1647 | 56 |
| 11:04 | 2779 | 6.8 | 5105 | 12.7 | 1700 | 57 |
| 11:05 | 2839 | 6.9 | 5040 | 12.5 | 1652 | 56 |
| 11:06 | 2843 | 6.9 | 5038 | 12.5 | 1620 | 55 |
| 11:07 | 2821 | 6.9 | 5052 | 12.5 | 1560 | 53 |
| 11:08 | 2773 | 6.7 | 5116 | 12.7 | 1584 | 54 |
| 11:09 | 2831 | 6.9 | 5059 | 12.5 | 1580 | 53 |
| 11:10 | 2862 | 7.0 | 5024 | 12.5 | 1580 | 53 |
| 11:11 | 2821 | 6.9 | 5067 | 12.6 | 1571 | 53 |
| 11:12 | 2796 | 6.8 | 5092 | 12.6 | 1557 | 53 |
| 11:13 | 2903 | 7.1 | 4976 | 12.3 | 1556 | 53 |
| 11:14 | 2849 | 6.9 | 5034 | 12.5 | 1587 | 54 |
| 11:15 | 2873 | 7.0 | 5010 | 12.4 | 1550 | 52 |
| 11:16 | 2808 | 6.8 | 5073 | 12.6 | 1510 | 51 |
| 11:17 | 2805 | 6.8 | 5085 | 12.6 | 1540 | 52 |
| 11:18 | 2880 | 7.0 | 5000 | 12.4 | 1530 | 52 |
| 11:19 | 2893 | 7.0 | 4987 | 12.4 | 1583 | 54 |
| 11:20 | 2810 | 6.8 | 5061 | 12.6 | 1590 | 54 |

WESTON SOLUTIONS

# RUN DATA

Number 3

| | | | |
|---|---|---|---|
| Client: | **Bowater** | Project Number: | **03917.008.007** |
| Location: | **Catawba, SC** | Operator: | **T. Simpkins** |
| Source: | **No. 3 Recovery** | Date: | **26 Jul 2006** |
| Calibration: | **1** | | |

| Time | O2 | | CO2 | | NOx | |
|---|---|---|---|---|---|---|
| | mv | % | mv | % | mv | ppm |
| 11:21 | 2816 | 6.9 | 5074 | 12.6 | 1597 | 54 |
| 11:22 | 2849 | 6.9 | 5043 | 12.5 | 1590 | 54 |
| 11:23 | 2815 | 6.8 | 5087 | 12.6 | 1586 | 54 |
| 11:24 | 2815 | 6.8 | 5081 | 12.6 | 1580 | 53 |
| 11:25 | 2859 | 7.0 | 5032 | 12.5 | 1573 | 53 |
| 11:26 | 2847 | 6.9 | 5044 | 12.5 | 1573 | 53 |
| 11:27 | 2903 | 7.1 | 4991 | 12.4 | 1551 | 53 |
| 11:28 | 2833 | 6.9 | 5054 | 12.5 | 1612 | 54 |
| 11:29 | 2837 | 6.9 | 5053 | 12.5 | 1599 | 54 |
| 11:30 | 2825 | 6.9 | 5076 | 12.6 | 1627 | 55 |
| 11:31 | 2870 | 7.0 | 5021 | 12.5 | 1631 | 55 |
| 11:32 | 2786 | 6.8 | 5105 | 12.7 | 1619 | 55 |
| 11:33 | 2858 | 7.0 | 5028 | 12.5 | 1597 | 54 |
| 11:34 | 2860 | 7.0 | 5016 | 12.4 | 1549 | 52 |
| 11:35 | 2828 | 6.9 | 5053 | 12.5 | 1581 | 53 |
| 11:36 | 2805 | 6.8 | 5074 | 12.6 | 1622 | 55 |
| 11:37 | 2752 | 6.7 | 5120 | 12.7 | 1718 | 58 |
| 11:38 | 2780 | 6.8 | 5106 | 12.7 | 1593 | 54 |
| 11:39 | 2781 | 6.8 | 5102 | 12.7 | 1541 | 52 |
| 11:40 | 2780 | 6.8 | 5093 | 12.6 | 1442 | 49 |
| 11:41 | 2754 | 6.7 | 5128 | 12.7 | 1529 | 52 |
| 11:42 | 2715 | 6.6 | 5166 | 12.8 | 1631 | 55 |
| 11:43 | 2742 | 6.7 | 5151 | 12.8 | 1630 | 55 |
| 11:44 | 2801 | 6.8 | 5090 | 12.6 | 1538 | 52 |
| 11:45 | 2568 | 6.2 | 5314 | 13.2 | 1568 | 53 |
| 11:46 | 2730 | 6.6 | 5161 | 12.8 | 1581 | 53 |
| 11:47 | 2792 | 6.8 | 5091 | 12.6 | 1635 | 55 |
| 11:48 | 2772 | 6.7 | 5113 | 12.7 | 1600 | 54 |
| **Run Avg** | **2811** | **6.8** | **5076** | **12.6** | **1594** | **54** |

WESTON SOLUTIONS

# BIAS

Number 1

| | | | |
|---|---|---|---|
| Client: | **Bowater** | Project Number: | **03917.008.007** |
| Location: | **Catawba, SC** | Operator: | **T. Simpkins** |
| Source: | **No. 3 Recovery** | Date: | **26 Jul 2006** |

Starting Time: 07:53

## O2

Method: EPA 3A

Span Conc. 25.0 %

**Bias Results**

| Gas | Cal % | Bias Response mv | Bias Response % | Bias Error |
|---|---|---|---|---|
| **Zero** | 0.0 | 110 | 0.1 | 0.4% |
| **Span** | 10.0 | 4095 | 10.0 | 0.0% |

## CO2

Method: EPA 3A

Span Conc. 25.0 %

**Bias Results**

| Gas | Cal % | Bias Response mv | Bias Response % | Bias Error |
|---|---|---|---|---|
| **Zero** | 0.0 | 66 | 0.1 | 0.4% |
| **Span** | 9.9 | 3938 | 9.8 | -0.4% |

## NOx

Method: EPA 7E

Span Conc. 275 ppm

**Bias Results**

| Gas | Cal ppm | Bias Response mv | Bias Response ppm | Bias Error |
|---|---|---|---|---|
| **Zero** | 0 | -80 | 1 | 0.4% |
| **Span** | 135 | 4048 | 131 | -1.5% |

WESTON SOLUTIONS

# BIAS AND CALIBRATION DRIFT

Number 2

| | | | |
|---|---|---|---|
| Client: | **Bowater** | Project Number: | **03917.008.007** |
| Location: | **Catawba, SC** | Operator: | **T. Simpkins** |
| Source: | **No. 3 Recovery** | Date: | **26 Jul 2006** |

Starting Time: 09:05

**O2**
Method: EPA 3A
Span Conc. 25.0 %

**Bias Results**

| Gas | Cal % | Bias Response mv | Bias Response % | Bias Error |
|---|---|---|---|---|
| **Zero** | 0.0 | 126 | 0.1 | 0.4% |
| **Span** | 10.0 | 4091 | 10.0 | 0.0% |

**Calibration Drift**

| Gas | Initial* % | Initial* mv | Final % | Drift |
|---|---|---|---|---|
| **Zero** | 0.1 | 126 | 0.1 | 0.0% |
| **Span** | 10.0 | 4091 | 10.0 | 0.0% |

*Bias No. 1

**CO2**
Method: EPA 3A
Span Conc. 25.0 %

**Bias Results**

| Gas | Cal % | Bias Response mv | Bias Response % | Bias Error |
|---|---|---|---|---|
| **Zero** | 0.0 | 79 | 0.2 | 0.8% |
| **Span** | 9.9 | 3991 | 9.9 | 0.0% |

**Calibration Drift**

| Gas | Initial* % | Initial* mv | Final % | Drift |
|---|---|---|---|---|
| **Zero** | 0.1 | 79 | 0.2 | 0.4% |
| **Span** | 9.8 | 3991 | 9.9 | 0.4% |

*Bias No. 1

WESTON SOLUTIONS

# BIAS AND CALIBRATION DRIFT

Number 2

| | | | |
|---|---|---|---|
| Client: | **Bowater** | Project Number: | **03917.008.007** |
| Location: | **Catawba, SC** | Operator: | **T. Simpkins** |
| Source: | **No. 3 Recovery** | Date: | **26 Jul 2006** |

Starting Time: 09:05

**NOx**
Method: EPA 7E
Span Conc. 275 ppm

**Bias Results**

| Gas | Cal ppm | Bias Response mv | Bias Response ppm | Bias Error |
|---|---|---|---|---|
| **Zero** | 0 | -154 | -1 | -0.4% |
| **Span** | 135 | 4028 | 131 | -1.5% |

**Calibration Drift**

| Gas | Initial* ppm | Final mv | Final ppm | Drift |
|---|---|---|---|---|
| **Zero** | 1 | -154 | -1 | -0.7% |
| **Span** | 131 | 4028 | 131 | 0.0% |

*Bias No. 1

WESTON SOLUTIONS

# BIAS AND CALIBRATION DRIFT

Number 3

| | | | |
|---|---|---|---|
| Client: | **Bowater** | Project Number: | **03917.008.007** |
| Location: | **Catawba, SC** | Operator: | **T. Simpkins** |
| Source: | **No. 3 Recovery** | Date: | **26 Jul 2006** |

Starting Time: 10:25

**O2**
Method: EPA 3A
Span Conc. 25.0 %

**Bias Results**

| Gas | Cal % | Bias Response mv | Bias Response % | Bias Error |
|---|---|---|---|---|
| **Zero** | 0.0 | 113 | 0.1 | 0.4% |
| **Span** | 10.0 | 4083 | 10.0 | 0.0% |

**Calibration Drift**

| Gas | Initial* % | Initial* mv | Final % | Drift |
|---|---|---|---|---|
| **Zero** | 0.1 | 113 | 0.1 | 0.0% |
| **Span** | 10.0 | 4083 | 10.0 | 0.0% |

*Bias No. 2

**CO2**
Method: EPA 3A
Span Conc. 25.0 %

**Bias Results**

| Gas | Cal % | Bias Response mv | Bias Response % | Bias Error |
|---|---|---|---|---|
| **Zero** | 0.0 | 114 | 0.2 | 0.8% |
| **Span** | 9.9 | 3991 | 9.9 | 0.0% |

**Calibration Drift**

| Gas | Initial* % | Initial* mv | Final % | Drift |
|---|---|---|---|---|
| **Zero** | 0.2 | 114 | 0.2 | 0.0% |
| **Span** | 9.9 | 3991 | 9.9 | 0.0% |

*Bias No. 2

WESTON SOLUTIONS

# BIAS AND CALIBRATION DRIFT

Number 3

| | | | |
|---|---|---|---|
| Client: | **Bowater** | Project Number: | **03917.008.007** |
| Location: | **Catawba, SC** | Operator: | **T. Simpkins** |
| Source: | **No. 3 Recovery** | Date: | **26 Jul 2006** |

Starting Time: 10:25

**NOx**
Method: EPA 7E
Span Conc. 275 ppm

**Bias Results**

| Gas | Cal ppm | Bias Response mv | Bias Response ppm | Bias Error |
|---|---|---|---|---|
| **Zero** | 0 | -142 | -1 | -0.4% |
| **Span** | 135 | 4043 | 131 | -1.5% |

**Calibration Drift**

| Gas | Initial* ppm | Final mv | Final ppm | Drift |
|---|---|---|---|---|
| **Zero** | -1 | -142 | -1 | 0.0% |
| **Span** | 131 | 4043 | 131 | 0.0% |

*Bias No. 2

WESTON SOLUTIONS

# BIAS AND CALIBRATION DRIFT

Number 4

| | | | |
|---|---|---|---|
| Client: | **Bowater** | Project Number: | **03917.008.007** |
| Location: | **Catawba, SC** | Operator: | **T. Simpkins** |
| Source: | **No. 3 Recovery** | Date: | **26 Jul 2006** |

Starting Time: 11:51

## O2

Method: EPA 3A

Span Conc. 25.0 %

**Bias Results**

| Gas | Cal % | Bias Response mv | Bias Response % | Bias Error |
|---|---|---|---|---|
| Zero | 0.0 | 119 | 0.1 | 0.4% |
| Span | 10.0 | 4059 | 10.0 | 0.0% |

**Calibration Drift**

| Gas | Initial* % | Initial* mv | Final % | Drift |
|---|---|---|---|---|
| Zero | 0.1 | 119 | 0.1 | 0.0% |
| Span | 10.0 | 4059 | 10.0 | 0.0% |

*Bias No. 3

## CO2

Method: EPA 3A

Span Conc. 25.0 %

**Bias Results**

| Gas | Cal % | Bias Response mv | Bias Response % | Bias Error |
|---|---|---|---|---|
| Zero | 0.0 | 99 | 0.2 | 0.8% |
| Span | 9.9 | 3995 | 9.9 | 0.0% |

**Calibration Drift**

| Gas | Initial* % | Initial* mv | Final % | Drift |
|---|---|---|---|---|
| Zero | 0.2 | 99 | 0.2 | 0.0% |
| Span | 9.9 | 3995 | 9.9 | 0.0% |

*Bias No. 3

WESTON SOLUTIONS

# BIAS AND CALIBRATION DRIFT

Number 4

| | | | |
|---|---|---|---|
| Client: | **Bowater** | Project Number: | **03917.008.007** |
| Location: | **Catawba, SC** | Operator: | **T. Simpkins** |
| Source: | **No. 3 Recovery** | Date: | **26 Jul 2006** |

Starting Time: 11:51

**NOx**
Method: EPA 7E
Span Conc. 275 ppm

**Bias Results**

| Gas | Cal ppm | Bias Response mv | Bias Response ppm | Bias Error |
|---|---|---|---|---|
| **Zero** | 0 | -99 | 0 | 0.0% |
| **Span** | 135 | 4072 | 132 | -1.1% |

**Calibration Drift**

| Gas | Initial* ppm | Initial* mv | Final ppm | Drift |
|---|---|---|---|---|
| **Zero** | -1 | -99 | 0 | 0.4% |
| **Span** | 131 | 4072 | 132 | 0.4% |

*Bias No. 3

WESTON SOLUTIONS

# ANALYZER INFORMATION

| | | | |
|---|---|---|---|
| Client: | **Bowater** | Project Number: | **03917.008.007** |
| Location: | **Catawba, SC** | Operator: | **T. Simpkins** |
| Source: | **No. 3 Recovery** | Date: | **26 Jul 2006** |

**File Name:** C:\Data\Bowater- Catawba, SC\Compliance 2006\No. 3 RB 072606.cem
**Computer:** WSAUB60 **Trailer:** 261

Analog Input Device: **Keithley KPCMCIA 16AI Card**

**Channel 1**

| | |
|---|---|
| Analyte | **O2** |
| Method | **EPA 3A**, Using Bias |
| Analyzer Make & Model | **CA 300** |
| Full-Scale Output, mv | **10000** |
| Span Concentration, % | **25.0** |

**Channel 2**

| | |
|---|---|
| Analyte | **CO2** |
| Method | **EPA 3A**, Using Bias |
| Analyzer Make & Model | **CA 300** |
| Full-Scale Output, mv | **10000** |
| Span Concentration, % | **25.0** |

**Channel 4**

| | |
|---|---|
| Analyte | **NOx** |
| Method | **EPA 7E**, Using Bias |
| Analyzer Make & Model | **CA-400-CLD** |
| Full-Scale Output, mv | **10000** |
| Span Concentration, ppm | **275** |

# CALIBRATION

Number 1

| | | | |
|---|---|---|---|
| Client: | **Bowater** | Project Number: | **03917.008.007** |
| Location: | **Catawba, SC** | Operator: | **T. Simpkins** |
| Source: | **No. 3 Recovery** | Date: | **26 Jul 2006** |

Starting Time: 07:41

**O2**

Method: EPA 3A

Calibration Type: Linear Regression

Calibration Results

| % | Cylinder ID | Result, mv |
|---|---|---|
| Zero | - | 79 |
| 10.1 | CC92388 | 4098 |
| 20.4 | SG880199NB | 8259 |

Curve Coefficients

| Slope | Intercept | Corr. Coeff. |
|---|---|---|
| 401.0 | 68.5 | >0.9999 |

**CO2**

Method: EPA 3A

Calibration Type: Linear Regression

Calibration Results

| % | Cylinder ID | Result, mv |
|---|---|---|
| Zero | - | 15 |
| 9.9 | CC92388 | 3992 |
| 19.5 | SG880199NB | 7854 |

Curve Coefficients

| Slope | Intercept | Corr. Coeff. |
|---|---|---|
| 402.0 | 14.2 | >0.9999 |

WESTON SOLUTIONS

# CALIBRATION

Number 1

| | | | |
|---|---|---|---|
| Client: | **Bowater** | Project Number: | **03917.008.007** |
| Location: | **Catawba, SC** | Operator: | **T. Simpkins** |
| Source: | **No. 3 Recovery** | Date: | **26 Jul 2006** |

Starting Time: 07:41

**NOx**
Method: EPA 7E
Calibration Type: Linear Regression

Calibration Results

| ppm | Cylinder ID | Result, mv |
|---|---|---|
| Zero | - | -102 |
| 136 | CC137926 | 4172 |
| 260 | SG9132706BAL | 8147 |

Curve Coefficients

| Slope | Intercept | Corr. Coeff. |
|---|---|---|
| 31.72 | -115.0 | >0.9999 |

WESTON SOLUTIONS

# CALIBRATION ERROR

Number 1

| | | | |
|---|---|---|---|
| Client: | **Bowater** | Project Number: | **03917.008.007** |
| Location: | **Catawba, SC** | Operator: | **T. Simpkins** |
| Source: | **No. 3 Recovery** | Date: | **26 Jul 2006** |

Starting Time: 07:41

**O2**

Method: EPA 3A

**Slope** 401.0 **Intercept** 68.5

| **Standard, %** | **Response, mV** | **%** | **Error, %** |
|---|---|---|---|
| Zero | 79 | 0.0 | 0.0 |
| 10.10 | 4098 | 10.0 | -0.4 |
| 20.4 | 8259 | 20.4 | 0.0 |

**CO2**

Method: EPA 3A

**Slope** 402.0 **Intercept** 14.2

| **Standard, %** | **Response, mV** | **%** | **Error, %** |
|---|---|---|---|
| Zero | 15 | 0.0 | 0.0 |
| 9.90 | 3992 | 9.9 | 0.0 |
| 19.5 | 7854 | 19.5 | 0.0 |

**NOx**

Method: EPA 7E

**Slope** 31.72 **Intercept** -115.0

| **Standard, ppm** | **Response, mV** | **ppm** | **Error, %** |
|---|---|---|---|
| Zero | -102 | 0 | 0.0 |
| 136 | 4172 | 135 | -0.4 |
| 260 | 8147 | 260 | 0.0 |

WESTON SOLUTIONS

# APPENDIX D
# LABORATORY DATA

# *Inter-Office Memorandum*

WESTON SOLUTIONS
Restoring Resource Efficiency

***Auburn Operations***

TO: Temp Simpkins cc: file

FROM: Brian Benson BKB DATE: 31 July 2006

PROJECT: Bowater – Catawba, SC

W.O.NO: 03917.008.007

SUBJECT: Method 5 Analysis Results.

ACTION: Analysis of samples received on 27 July 2006.

This letter with attachments constitutes our report of gravimetric determination of the glass fiber filters and water rinse fractions submitted to the laboratory for particulate analysis. The samples arrived in good condition and in accordance with the chain-of-custody. The samples were prepared on 27 July 2006 and analyzed on 28 July 2006 through 31 July 2006. The analysis followed procedures in USEPA Reference Method 5 for particulate emissions from stationary sources.

QUALITY ASSURANCE AND QUALITY CONTROL:

Quality control procedures conformed to the requirements of the reference method and our laboratory quality assurance program. Duplicate filter weights differed less than 0.5 mg or 1% of the total weight less the tare weight, whichever is greater. The water rinse fraction blank residue correction was greater than 0.001% of the total mass of the wash solvent used; therefore the water rinse fractions are blank corrected using 0.001 % of the water wash mass. Filter residue weights were not blank corrected.

Substantiating data is on file and available upon request.

tal

attachments

# Analysis Report

for Particulates by EPA Method 5

| | | | |
|---|---|---|---|
| CLIENT | : Bowater - Catawba, SC | Balance ID: | Mettler AE163 |
| WESTON W.O. No. | : 03917.008.007 | Lab Ambient Temp (F): | 75 |
| Date Received | : 27 July 2006 | Lab Rel Humidity (%): | 40 |
| Analyst | : STH | Barometric Pressure (Hg): | 31.00 |

| **Source** | **# 3 RECOVERY BOILER** | | | |
|---|---|---|---|---|
| **Field Run No.** | **ONE** | **TWO** | **THREE** | **FIELD BLANK** |
| **LIQUID FRACTION** | | | | |
| **Filter ID** | CZ 7668 | CZ 7671 | CZ 7670 | CZ 7669 |
| Beaker ID | 41-07 | 42-07 | 43-07 | 44-07 |
| Liquid Volume (mL) | 100 | 80 | 90 | 112 |
| | | | | |
| **Constant Initial Weight (g)** | **112.5281** | **121.8258** | **122.4488** | **109.4188** |
| | | | | |
| **Constant Final Weight (g)** | **112.5480** | **121.8398** | **122.4685** | **109.4222** |
| Final-Initial Beaker Wts. (g) | 0.0199 | 0.0140 | 0.0197 | 0.0033 |
| Sample/Blank Volume Ratio | 0.8929 | 0.7143 | 0.8036 | |
| Liquid Blank Correction, ≤ 0.001% (g) | 0.0030 | 0.0024 | 0.0027 | |
| Liquid Blank Correction, > 0.001% (g)* | 0.0010 | 0.0008 | 0.0009 | |
| **Liquid Particulate Weight (g)** | **0.0189** | **0.0132** | **0.0188** | **0.0033** |
| **FILTER FRACTION** | | | | |
| **Filter ID** | CZ 7668 | CZ 7671 | CZ 7670 | CZ 7669 |
| | | | | |
| **Constant Initial Weight (g)** | **38.2023** | **40.3165** | **37.6328** | **39.0177** |
| | | | | |
| **Constant Final Weight (g)** | **38.2482** | **40.3680** | **37.6740** | **39.0179** |
| Final-Initial Filter Wts. (g) | 0.0459 | 0.0515 | 0.0412 | 0.0002 |
| Filter Blank (g) | 0.0002 | 0.0002 | 0.0002 | |
| **Filter Particulate Weight (g)** | **0.0459** | **0.0515** | **0.0412** | |
| **SUMMARY** | | | | |
| **Filter Particulate Weight (g)** | **0.0459** | **0.0515** | **0.0412** | |
| **Liquid Particulate Weight (g)** | **0.0189** | **0.0132** | **0.0188** | |
| **Net Particulate Weight (g)** | **0.0649** | **0.0648** | **0.0601** | |

Values are rounded for presentation purposes only, thus values shown may differ from actual calculations.

**Sample Recovery Solution** **Water**

**Weight Percent of Blank Liquid Fraction** **0.0030%**

***Note: If the blank liquid fraction has a residue correction of greater than 0.001 percent, then the samples are blank corrected upto 0.001 % of the mass of the wash solvent.**

# Custody Transfer Record / Lab Service Request



Client: Bowater - Catawba, SC

Work Order No.: 03917.008.007

Desired TAT: 3 Results Due By: 7/~~29~~ 31/06

Project Manager: Temp Employee

Submitted By: J. Ward Phone #: 663-7896

ANALYSES REQUESTED: pH

ANALYTICAL METHOD: SM5

| Weston Use Only LAB ID | Client ID/ Sample Description | Matrix | Date Collected | pH | | | | Beaker # | Vol. (mL) | | |
|---|---|---|---|---|---|---|---|---|---|---|---|
| CZ 7668 | #3 Recovery Boiler Filter/FHR R1 | DI H2O | 7/26/06 | ✓ | | | | 41 07 | 100 | 80 | |
| CZ 7669 | Field Blank w/ DI H2O | DI H2O | 7/26/06 | ✓ | | | 4/4 07 80 | 42 07 | 80 | 112 | |
| CZ 7670 | #3 Recovery Boiler Filter/FHR R3 | " | " | ✓ | | | | 43 07 | 90 | 80 | |
| CZ 7671 | #3 Recovery Boiler Filter/FHR R2 | " | " | ✓ | | | 4/2 07 80 | 44 07 | 112 | 80 | |
| | TOTAL LISTED ON THIS COC | | | | | | | | | | |

| RELINQUISHED BY | RECEIVED BY | DATE/TIME | # / CONDITION | RELINQUISHED BY | RECEIVED BY | DATE/TIME | # / CONDITION |
|---|---|---|---|---|---|---|---|
| Temp Employee | [illegible] | 7/27/06 0730 | ✓ | | | | |

WESTON Analytics Use Only

SAMPLES WERE: Shipped or Hand Deliv'd; Ambient or Chilled; Intact or Damaged*

SECURITY SEALS WERE: Present or Absent; Intact or Broken* or N/A

SAMPLE LOSS: Y or N

COC ACCURATE: Y or N

* NOTE SAMPLE ID ON BACK

WESTON SOLUTIONS
Weston Solutions, Inc.
1625 Pumphrey Avenue
Auburn, Alabama 36832-4303
334-826-6100 • Fax 334-826-8232
www.westonsolutions.com

# APPENDIX E
# QUALITY CONTROL DATA

# METHOD 5 DRY GAS METER CALIBRATION USING CRITICAL ORIFICES

1) Select three critical orifices to calibrate the dry gas meter which bracket the expected operating range.
2) Record barometric pressure before and after calibration procedure.
3) Run at tested vacuum (from Orifice Calibration Report), for a period of time necessary to achieve a minimum total volume of 5 cubic feet.
4) Record readings in outlined boxes below, other columns are automatically calculated.

DATE: **12/29/05**

METER PART #: **AO15**

METER SERIAL #: 97306

CRITICAL ORIFICE SET SERIAL #: 13315

| | INITIAL | FINAL | AVG ($P_{bar}$) |
|---|---|---|---|
| BAROMETRIC PRESSURE (in Hg): | 29.10 | 29.05 | 29.08 |

Calibrated by:

| ORIFICE # | RUN # | K' FACTOR (AVG) | TESTED VACUUM (in Hg) | DGM READINGS ($FT^3$) INITIAL | DGM READINGS ($FT^3$) FINAL | DGM READINGS ($FT^3$) NET ($V_m$) | AMBIENT F° | DGM F° INITIAL | DGM F° FINAL | DGM AVG | ELAPSED TIME (MIN) θ | DGM ΔH (in $H_2O$) | (1) $V_m$ (STD) | (2) $V_{cr}$ (STD) | (3) Y | (4) $\Delta H_@$ |
|---|---|---|---|---|---|---|---|---|---|---|---|---|---|---|---|---|
| 12 | 1 | 0.3359 | 24 | 617.424 | 633.384 | 15.960 | 70 | 66 | 67 | 67 | 37 | 0.54 | 15.578 | 15.701 | 1.008 | 1.687 |
| 16 | 2 | 0.4418 | 22 | 776.741 | 793.985 | 17.244 | 71 | 72 | 71 | 72 | 30 | 0.99 | 16.691 | 16.728 | 1.002 | 1.791 |
| 19 | 3 | 0.5188 | 21 | 745.349 | 770.460 | 25.111 | 71 | 72 | 72 | 72 | 37 | 1.40 | 24.309 | 24.227 | 0.997 | 1.837 |
| 25 | 4 | 0.6885 | 19 | 711.547 | 738.250 | 26.703 | 71 | 72 | 73 | 73 | 30 | 2.40 | 25.890 | 26.069 | 1.007 | 1.788 |
| 31 | 5 | 0.8376 | 17 | 686.904 | 698.838 | 11.934 | 71 | 72 | 72 | 72 | 11 | 3.60 | 11.617 | 11.629 | 1.001 | 1.812 |
| | | | | | | | | | | | | | | AVG = | **1.003** | **1.783** |

**USING THE CRITICAL ORIFICES AS CALIBRATION STANDARDS:**

The following equations are used to calculate the standard volumes of air passed through the DGM, $V_m$ (std), and the critical orifice, $V_{cr}$ (std), and the DGM calibration factor, Y. These equations are automatically calculated in the spreadsheet above.

| | |
|---|---|
| Individual Y's .02 from average? | YES |
| Individual $\Delta H_@$ values 0.2 from average? | YES |

(1) $V_m\,(std) = K_1\, V_m \dfrac{P_{bar} + (\Delta H/13.6)}{T_m}$ = Net volume of gas sample passed through DGM, corrected to standard conditions

$K_1$ = 17.64 °R/in. Hg (English), 0.3858 °K/mm Hg (Metric)

$T_m$ = Absolute DGM avg. temperature (°R - English, °K - Metric)

(2) $V_{cr}\,(std) = K' \sqrt{\dfrac{P_{bar}\,\theta}{T_{amb}}}$ = Volume of gas sample passed through the critical orifice, corrected to standard conditions

$T_{amb}$ = Absolute ambient temperature (°R - English, °K - Metric)

K' = Average K' factor from Critical Orifice Calibration

(3) $Y = \dfrac{V_{cr}\,(std)}{V_m\,(std)}$ = DGM calibration factor

(4) $\Delta H_@ = \left(\dfrac{0.75\,\theta}{V_{cr}(std)}\right)^2 \Delta H$

Bowater
Catawba, SC

03917.008.007
No. 3 Recovery Boiler

## POST-TEST METER Y CALIBRATION CHECK

Meter ID: A08

| Run Number | | 1 | 2 | 3 | Mean |
|---|---|---|---|---|---|
| Sampling Time, min | (Theta) | 60 | 60 | 60 | 60 |
| Meter Volume, $ft^3$ | (Vm) | 38.963 | 38.457 | 38.984 | 38.801 |
| Meter Temperature, R | (tm) | 542 | 554 | 564 | 553 |
| Barometric Pressure, in. Hg | (Pb) | 29.38 | 29.38 | 29.38 | 29.38 |
| Meter Orifice Pressure, in. $H_2O$ | (dH) | 1.305 | 1.245 | 1.247 | 1.266 |
| Meter Pressure, in. Hg | (Pm) | 29.48 | 29.47 | 29.47 | 29.47 |
| Ave Sq Rt Meter Orifice Pressure, in. $H_2O$ | ((sqrt. dH)ave | 1.140 | 1.113 | 1.115 | 1.122 |
| Meter Orifice Calibraion Coefficient, in. $H_2O$ | (dH@) | 1.783 | 1.783 | 1.783 | 1.783 |
| Dry Mol. Wt. of Stack Gas, lb/lb-mole | (Md) | 30.30 | 30.30 | 30.30 | 30.30 |
| Dry Gas Meter Cal. Check Value | (Yqa) | 0.9848 | 0.9854 | 0.9815 | 0.9839 |
| Meter Correction Factor | (Y) | 1.0030 | 1.0030 | 1.0030 | 1.0030 |
| Mean Percent Difference, % | < +/- 5% | | | | **-1.91** |

# Airgas

**Airgas Specialty Gases**
12722 South Wentworth Avenue
Chicago, IL 60628
www.airgas.com

## Certificate of Analysis: EPA Protocol Gas Mixture

| | | | |
|---|---|---|---|
| Cylinder Number: | SG880199NB | Reference Number: | 54-124028233-8 |
| Cylinder Pressure: | 1999.6 PSIG | Expiration Date: | 1/20/2008 |
| Certification Date: | 1/20/2005 | Laboratory: | ASG - Chicago - IL |

### Certified Concentrations

| Component | Concentration | Accuracy | Analytical Principle | Procedure |
|---|---|---|---|---|
| CARBON DIOXIDE | 19.48 % | +/- 1% | NDIR | G1 |
| OXYGEN | 20.40 % | +/- 1% | Paramagnetic | G1 |
| NITROGEN | Balance | | | |

Certification performed in accordance with "EPA Traceability Protocol (Sept. 1997)" using the assay procedures listed. Analytical Methodology does not require correction for analytical interferences.

**Notes:**

Do not use cylinder below 150 psig.

Approval Signature _____

### Reference Standard Information

| Type | Balance Gas | Component | Cyl.Number | Concentration |
|---|---|---|---|---|
| NTRM 100504 | | OXYGEN | SG9168314BAL | 20.98 % |
| ntrm 040604 | | CARBON DIOXIDE | xco343190 | 19.84 % |

### Analytical Results

**1st Component** CARBON DIOXIDE

1st Analysis Date: 01/20/2005

| | | | |
|---|---|---|---|
| R 19.83 | S 19.46 | Z 0 | Conc 19.47 % |
| S 19.47 | Z 0 | R 19.83 | Conc 19.48 % |
| Z 0 | R 19.82 | S 19.46 | Conc 19.48 % |
| | | | AVG: 19.48 % |

**2nd Component** OXYGEN

1st Analysis Date: 01/20/2005

| | | | |
|---|---|---|---|
| R 20.98 | S 20.40 | Z 0 | Conc 20.40 % |
| S 20.41 | Z 0 | R 20.99 | Conc 20.40 % |
| Z 0 | R 20.99 | S 20.41 | Conc 20.40 % |
| | | | AVG: 20.40 % |

# Airgas

Airgas Specialty Gases
1075 Cinclare Drive
Port Allen, LA 70767
225.388.0900 Fax: 225.388.0959
www.airgas.com

## Certificate of Analysis: EPA Protocol Gas Mixture

| | | | |
|---|---|---|---|
| Cylinder Number: | CC92388 | Reference Number: | 83-124064666-1 |
| Cylinder Pressure: | 2000.6 PSIG | Expiration Date: | 5/10/2009 |
| Certification Date: | 5/10/2006 | Laboratory: | ASG - Port Allen - LA |

### Certified Concentrations

| Component | Concentration | Accuracy | Analytical Principle | Procedure |
|---|---|---|---|---|
| CARBON DIOXIDE | 9.943 % | +/- 1% | NonDispersive Infrared | G1 |
| OXYGEN | 10.05 % | +/- 1% | Paramagnetic | G1 |
| NITROGEN | Balance | | | |

Certification performed in accordance with "EPA Traceability Protocol (Sept. 1997)" using the assay procedures listed. Analytical Methodology does not require correction for analytical interferences.

**Notes:**

Do not use cylinder below 150 psig.

Approval Signature

### Reference Standard Information

| Type | Balance Gas | Component | Cyl.Number | Concentration |
|---|---|---|---|---|
| NTRM 82658 | NITROGEN | OXYGEN | CC14336 | 9.72 % |
| NTRM 81674 | NITROGEN | CARBON DIOXIDE | XC018732B | 6.89 % |

### Analytical Results

**1st Component** CARBON DIOXIDE

1st Analysis Date: 05/11/2006

| | | | |
|---|---|---|---|
| R 7.04 | S 10.16 | Z 0.02 | Conc 9.943 % |
| S 10.16 | Z 0.02 | R 7.06 | Conc 9.943 % |
| Z 0.02 | R 7.04 | S 10.16 | Conc 9.943 % |
| | | | AVG: 9.943 % |

**2nd Component** OXYGEN

1st Analysis Date: 05/10/2006

| | | | |
|---|---|---|---|
| R 9.68 | S 10.02 | Z -0.02 | Conc 10.06 % |
| S 10.00 | Z -0.02 | R 9.68 | Conc 10.04 % |
| Z -0.02 | R 9.68 | S 10.00 | Conc 10.04 % |
| | | | AVG: 10.05 % |

Airgas

# Certificate of Analysis: EPA Protocol Gas Mixture

**Airgas Specialty Gases**
325 McCausland Court
Cheshire, CT 06410
Phone (203) 250-6827
Fax (203) 250-6842
www.airgas.com

Cylinder Number: CC137926
Cylinder Pressure: 1999.6 PSIG
Certification Date: 3/23/2005
Reference Number: 46-124031806-4
Expiration Date: 3/23/2007
Laboratory: ASG - Cheshire - CT

## Certified Concentrations

| Component | Concentration | Accuracy | Analytical Principle | Procedure |
|---|---|---|---|---|
| NITRIC OXIDE | 135.8 PPM | +/- 1% | FTIR | G1 |
| NITROGEN | Balance | | | |
| Total oxides of nitrogen | 136 PPM | | | |

Certification performed in accordance with "EPA Traceability Protocol (Sept. 1997)" using the assay procedures listed. Analytical Methodology does not require correction for analytical interferences.

**Notes:**

Do not use cylinder below 150 psig.

Approval Signature

## Reference Standard Information

| Type | Balance Gas | Component | Cyl.Number | Concentration |
|---|---|---|---|---|
| NTRM 81686 | NITROGEN | NITRIC OXIDE | XC023968B | 487.6 PPM |
| NTRM 81685 | NITROGEN | NITRIC OXIDE | XC024164B | 244.6 PPM |

## Analytical Results

**1st Component** NITRIC OXIDE

1st Analysis Date: 03/15/2005

| | | | |
|---|---|---|---|
| R 245.169 | S 135.887 | Z -0.229 | Conc 135.7 PPM |
| S 136.814 | Z -0.173 | R 245.177 | Conc 136.6 PPM |
| Z -0.192 | R 245.053 | S 135.769 | Conc 135.6 PPM |
| | | | AVG: 135.9 PPM |

2nd Analysis Date: 03/23/2005

| | | | |
|---|---|---|---|
| R 487.345 | S 136.156 | Z 0.323 | Conc 136.0 PPM |
| S 135.442 | Z 0.453 | R 486.530 | Conc 135.4 PPM |
| Z 0.263 | R 486.524 | S 135.541 | Conc 135.7 PPM |
| | | | AVG: 135.7 PPM |

# Airgas

**Airgas Specialty Gases**
1075 Cinclare Drive
Port Allen, LA 70767
225.388.0900 Fax: 225.388.0959
www.airgas.com

## Certificate of Analysis: EPA Protocol Gas Mixture

| | | | |
|---|---|---|---|
| Cylinder Number: | SG9132706BAL | Reference Number: | 83-124038301-12 |
| Cylinder Pressure: | 1999.6 PSIG | Expiration Date: | 6/20/2007 |
| Certification Date: | 6/20/2005 | Laboratory: | ASG - Port Allen - LA |

### Certified Concentrations

| Component | Concentration | Accuracy | Analytical Principle | Procedure |
|---|---|---|---|---|
| NITRIC OXIDE | 258.91 PPM | +/- 1% | FTIR | G1 |
| NITROGEN | Balance | | | |

Total oxides of nitrogen 259.9 PPM

Certification performed in accordance with "EPA Traceability Protocol (Sept. 1997)" using the assay procedures listed. Analytical Methodology does not require correction for analytical interferences.

**Notes:**

Do not use cylinder below 150 psig.

Approval Signature Cheryl Baker

### Reference Standard Information

| Type | Balance Gas | Component | Cyl.Number | Concentration |
|---|---|---|---|---|
| NTRM 81685 | NITROGEN | NITRIC OXIDE | XC024165B | 244.6 PPM |

### Analytical Results

**1st Component** NITRIC OXIDE

1st Analysis Date: 06/13/2005

| | | | |
|---|---|---|---|
| R 0.548 | S 0.571 | Z 0.000 | Conc 258.66 PPM |
| S 0.571 | Z 0.000 | R 0.549 | Conc 258.38 PPM |
| Z 0.000 | R 0.549 | S 0.571 | Conc 258.32 PPM |
| | | | AVG: 258.45 PPM |

2nd Analysis Date: 06/20/2005

| | | | |
|---|---|---|---|
| R 0.549 | S 0.572 | Z 0.000 | Conc 259.17 PPM |
| S 0.572 | Z 0.00 | R 0.548 | Conc 259.38 PPM |
| Z 0.00 | R 0.548 | S 0.573 | Conc 259.58 PPM |
| | | | AVG: 259.37 PPM |

# RUN DATA

Number 10

| | | | |
|---|---|---|---|
| Client: | **Bowater** | Project Number: | **03917.008.007** |
| Location: | **Catawba, SC** | Operator: | **T. Simpkins** |
| Source: | **No. 3 Recovery** | Date: | **11 Aug 2006** |
| Calibration: | **1** | | |

| Time | NOx mv | NOx ppm |
|---|---|---|
| Starting time 10:30 | | |
| NOx converter test | | |
| 10:31 | 6971 | 209 |
| 10:32 | 6960 | 209 |
| 10:33 | 6961 | 209 |
| 10:34 | 6984 | 209 |
| 10:35 | 6961 | 209 |
| 10:36 | 6971 | 209 |
| 10:37 | 6964 | 209 |
| 10:38 | 6976 | 209 |
| 10:39 | 6970 | 209 |
| 10:40 | 6966 | 209 |
| 10:41 | 7033 | 211 |
| 10:42 | 7012 | 210 |
| 10:43 | 6997 | 210 |
| 10:44 | 7000 | 210 |
| 10:45 | 6982 | 209 |
| 10:46 | 7024 | 211 |
| 10:47 | 6990 | 210 |
| 10:48 | 7001 | 210 |
| 10:49 | 7007 | 210 |
| 10:50 | 7004 | 210 |
| 10:51 | 6975 | 209 |
| 10:52 | 7037 | 211 |
| 10:53 | 7015 | 210 |
| 10:54 | 7026 | 211 |
| 10:55 | 7042 | 211 |
| 10:56 | 7028 | 211 |
| 10:57 | 7016 | 210 |
| 10:58 | 6992 | 210 |
| 10:59 | 7019 | 210 |
| 11:00 | 7018 | 210 |
| **Run Avg** | **6997** | **210** |

# CALIBRATION

Number 1

| | | | |
|---|---|---|---|
| Client: | **Bowater** | Project Number: | **03917.008.007** |
| Location: | **Catawba, SC** | Operator: | **T. Simpkins** |
| Source: | **No. 3 Recovery** | Date: | **10 Aug 2006** |

Starting Time: 07:31

**NOx**

Method: EPA 7E

Calibration Type: Linear Regression

Calibration Results

| **ppm** | **Cylinder ID** | **Result, mv** |
|---|---|---|
| Zero | - | -34 |
| 136 | CC137926 | 4462 |
| 250 | CC34015 | 8379 |

Curve Coefficients

| **Slope** | **Intercept** | **Corr. Coeff.** |
|---|---|---|
| 33.63 | -58.6 | 0.9999 |

# CALIBRATION ERROR

Number 1

| | | | |
|---|---|---|---|
| Client: | **Bowater** | Project Number: | **03917.008.007** |
| Location: | **Catawba, SC** | Operator: | **T. Simpkins** |
| Source: | **No. 3 Recovery** | Date: | **10 Aug 2006** |

Starting Time: 07:31

**NOx**

Method: EPA 7E

**Slope** 33.63 **Intercept** -58.6

| Standard, ppm | Response, mV | ppm | Error, % |
|---|---|---|---|
| Zero | -34 | 1 | 0.4 |
| 136 | 4462 | 134 | -0.7 |
| 250 | 8379 | 251 | 0.4 |

# APPENDIX F
# PROCESS OPERATING/PRODUCTION DATA

**No. 3 Recovery Boiler**
**Process Data**

| | Steam Load MPPH 51fi317a.pv | Opacity % 51ai321a.pv | Black Liquor GPM 51fi308.pv | Liquor Solids % 51di307a.pv | # BLS/Hr | MMlbs BLS/day | Equv. Pulp Prod ADTP/hr |
|---|---|---|---|---|---|---|---|
| 07/26/06 07:48 AM | 482 | 8 | 325 | 66 | 139,052 | 3.34 | 43 |
| 07/26/06 07:54 AM | 473 | 7 | 324 | 66 | 138,547 | 3.33 | 43 |
| 07/26/06 08:00 AM | 469 | 9 | 324 | 66 | 138,524 | 3.32 | 43 |
| 07/26/06 08:06 AM | 474 | 9 | 326 | 66 | 139,074 | 3.34 | 43 |
| 07/26/06 08:12 AM | 466 | 8 | 326 | 66 | 139,510 | 3.35 | 43 |
| 07/26/06 08:18 AM | 465 | 9 | 325 | 66 | 138,830 | 3.33 | 43 |
| 07/26/06 08:24 AM | 498 | 10 | 324 | 66 | 138,551 | 3.33 | 43 |
| 07/26/06 08:30 AM | 493 | 9 | 326 | 66 | 139,268 | 3.34 | 43 |
| 07/26/06 08:36 AM | 470 | 8 | 327 | 66 | 139,824 | 3.36 | 43 |
| 07/26/06 08:42 AM | 458 | 9 | 327 | 66 | 139,887 | 3.36 | 43 |
| 07/26/06 08:48 AM | 469 | 9 | 325 | 66 | 139,225 | 3.34 | 43 |
| 07/26/06 08:54 AM | 490 | 8 | 324 | 66 | 138,817 | 3.33 | 43 |
| 07/26/06 09:00 AM | 513 | 8 | 324 | 66 | 138,829 | 3.33 | 43 |
| 07/26/06 09:06 AM | 493 | 9 | 326 | 66 | 139,638 | 3.35 | 43 |
| 07/26/06 09:12 AM | 476 | 9 | 328 | 66 | 140,648 | 3.38 | 44 |
| 07/26/06 09:18 AM | 497 | 8 | 326 | 66 | 139,769 | 3.35 | 43 |
| 07/26/06 09:24 AM | 501 | 8 | 324 | 66 | 138,994 | 3.34 | 43 |
| 07/26/06 09:30 AM | 499 | 8 | 325 | 66 | 139,111 | 3.34 | 43 |
| 07/26/06 09:36 AM | 489 | 8 | 325 | 66 | 139,487 | 3.35 | 43 |
| 07/26/06 09:42 AM | 481 | 8 | 328 | 66 | 140,435 | 3.37 | 44 |
| 07/26/06 09:48 AM | 475 | 8 | 327 | 66 | 140,265 | 3.37 | 44 |
| 07/26/06 09:54 AM | 470 | 8 | 325 | 66 | 139,309 | 3.34 | 43 |
| 07/26/06 10:00 AM | 467 | 7 | 325 | 66 | 139,404 | 3.35 | 43 |
| 07/26/06 10:06 AM | 486 | 8 | 325 | 66 | 139,466 | 3.35 | 43 |
| 07/26/06 10:12 AM | 478 | 9 | 325 | 66 | 139,453 | 3.35 | 43 |
| 07/26/06 10:18 AM | 461 | 8 | 324 | 67 | 139,188 | 3.34 | 43 |
| 07/26/06 10:24 AM | 471 | 7 | 324 | 67 | 139,211 | 3.34 | 43 |
| 07/26/06 10:30 AM | 486 | 8 | 327 | 67 | 140,244 | 3.37 | 44 |
| 07/26/06 10:36 AM | 487 | 8 | 327 | 67 | 140,137 | 3.36 | 44 |
| 07/26/06 10:42 AM | 467 | 7 | 325 | 67 | 139,500 | 3.35 | 43 |
| 07/26/06 10:48 AM | 466 | 7 | 324 | 67 | 139,134 | 3.34 | 43 |
| 07/26/06 10:54 AM | 481 | 8 | 324 | 67 | 139,164 | 3.34 | 43 |
| 07/26/06 11:00 AM | 480 | 8 | 325 | 67 | 139,659 | 3.35 | 43 |
| 07/26/06 11:06 AM | 478 | 7 | 326 | 67 | 140,041 | 3.36 | 44 |
| 07/26/06 11:12 AM | 482 | 8 | 326 | 67 | 140,066 | 3.36 | 44 |
| 07/26/06 11:18 AM | 473 | 8 | 325 | 67 | 139,737 | 3.35 | 43 |

**No. 3 Recovery Boiler**
**EP Data**

| | W-I | | W-M | | W-O | | E-I | | E-M | | E-O | |
|---|---|---|---|---|---|---|---|---|---|---|---|---|
| | 51ev233.pv | 51ea233.pv | 51ev234.pv | 51ea234.pv | 51ev235.pv | 51ea235.pv | 51ev230.pv | 51ea230.pv | 51ev231.pv | 51ea231.pv | 51ev232.pv | 51ea232.pv |
| | Kv | Ma | Kv | Ma | Kv | Ma | Kv | Ma | Kv | Ma | Kv | Ma |
| 07/26/06 07:45 AM | 48 | 371 | 39 | 1374 | 40 | 1090 | 46 | 480 | 39 | 1090 | 42 | 1126 |
| 07/26/06 08:00 AM | 46 | 361 | 40 | 1362 | 40 | 1091 | 45 | 430 | 40 | 1073 | 42 | 1128 |
| 07/26/06 08:15 AM | 47 | 338 | 40 | 1399 | 41 | 1093 | 47 | 417 | 41 | 1072 | 42 | 1130 |
| 07/26/06 08:30 AM | 46 | 318 | 41 | 1408 | 41 | 1093 | 49 | 401 | 40 | 1094 | 42 | 1132 |
| 07/26/06 08:45 AM | 47 | 329 | 40 | 1397 | 40 | 1094 | 50 | 413 | 39 | 1075 | 42 | 1131 |
| 07/26/06 09:00 AM | 47 | 322 | 40 | 1407 | 40 | 1092 | 44 | 327 | 40 | 1072 | 42 | 1130 |
| 07/26/06 09:15 AM | 48 | 323 | 40 | 1392 | 40 | 1092 | 45 | 350 | 39 | 1092 | 42 | 1130 |
| 07/26/06 09:30 AM | 48 | 350 | 39 | 1386 | 40 | 1092 | 49 | 380 | 39 | 1092 | 42 | 1130 |
| 07/26/06 09:45 AM | 47 | 343 | 40 | 1386 | 40 | 1091 | 50 | 388 | 40 | 1092 | 42 | 1129 |
| 07/26/06 10:00 AM | 47 | 303 | 40 | 1387 | 40 | 1093 | 49 | 369 | 40 | 1091 | 42 | 1129 |
| 07/26/06 10:15 AM | 47 | 306 | 40 | 1382 | 40 | 1091 | 49 | 359 | 40 | 1091 | 42 | 1129 |
| 07/26/06 10:30 AM | 48 | 349 | 39 | 1378 | 40 | 1091 | 47 | 335 | 40 | 1091 | 42 | 1128 |
| 07/26/06 10:45 AM | 47 | 314 | 40 | 1407 | 40 | 1091 | 48 | 356 | 40 | 1091 | 42 | 1127 |
| 07/26/06 11:00 AM | 47 | 312 | 40 | 1373 | 40 | 1090 | 49 | 309 | 41 | 1072 | 42 | 1130 |
| 07/26/06 11:15 AM | 47 | 313 | 40 | 1381 | 40 | 1091 | 45 | 357 | 41 | 1083 | 42 | 1127 |
| 07/26/06 11:30 AM | 45 | 385 | 40 | 1380 | 40 | 1091 | 41 | 337 | 40 | 1091 | 42 | 1127 |
| 07/26/06 11:45 AM | 49 | 387 | 41 | 1367 | 41 | 1091 | 47 | 329 | 40 | 1092 | 42 | 1128 |