Work Order No. 03917.008.015

No. 1 Combination Boiler, No. 2 Combination Boiler, No. 2 Lime Kiln, No. 2 Recovery Furnace, and No. 3 Recovery Furnace Emission Compliance Test Report

Bowater Incorporated
Catawba, South Carolina
30-31 March and 1, 6-7 April 2010

Prepared For

BOWATER INCORPORATED
5300 Cureton Ferry Road
Catawba, South Carolina 29704

Templeton Simpkins
Project Manager
Approved for Transmittal

Natalie Vaught
Report Coordinator
Approved for Transmittal

Prepared By

WESTON SOLUTIONS, INC.
1625 Pumphrey Ave.
Auburn, Alabama 36832-4303
Phone: (334) 466-5600 Fax: (334) 466-5660

29 April 2010

WESTON SOLUTIONS, INC. (WESTON®)
EMISSION TESTING PRACTICE – AUBURN OPERATIONS
ACCREDITATION STIPULATION

Laboratory:	Weston Solutions, Inc.
Accreditor(s):	Louisiana Environmental Laboratory Accreditation Program (LELAP) – Laboratory and Emission Testing Practice
Accreditation ID:	LELAP – 03024
Scope:	Particulate Matter, Nitrogen Oxides, Total Reduced Sulfur Carbon Monoxide, Sulfur Dioxide, Sampling and Analysis
Effective:	LELAP – 21 December 2001
Expires:	LELAP – 30 June 2010

Data Qualifiers

The following are general reporting notes that are applicable to all WESTON reports, unless otherwise noted.

- **NL** denotes data that was not from a LELAP accredited method.
- **LNL** denotes lab results that are not from an accredited LELAP laboratory.
- **NN** denotes data that was not from a NELAP accredited method.
- **NNL** denotes lab results that are not from an accredited NELAP laboratory.
- **ED** denotes data that is not to be used for compliance purposes and may deviate from approved procedures.
- **Q** denotes data whose QA/QC check did not fall within the specified range. This data is still considered valid.
- **A** denotes data that is anomalously high with no explanation for the outlier.
- **BDL** denotes values that were below the limit of detection of the analyzer and 2% of the span gas was used to calculate an emission rate.
- **DF** denotes a dilution factor.
- **NAP** denotes emission testing performed by personnel from a non-NELAC accredited laboratory.
- **S** denotes analysis that has been subcontracted.

TABLE OF CONTENTS

SECTION 1 INTRODUCTION 5

SECTION 2 RESULTS AND DISCUSSION 6

SECTION 3 SOURCE TESTING METHODOLOGY 13

APPENDIX A SAMPLE CALCULATIONS

APPENDIX B TEST METHODOLOGY

APPENDIX C FIELD DATA – NO. 1 COMBINATION BOILER

APPENDIX D FIELD DATA – NO. 2 COMBINATION BOILER

APPENDIX E FIELD DATA – NO. 2 LIME KILN

APPENDIX F FIELD DATA – NO. 2 RECOVERY FURNACE

APPENDIX G FIELD DATA – NO. 3 RECOVERY FURNACE

APPENDIX H LABORATORY DATA

APPENDIX I QUALITY CONTROL DATA

APPENDIX J PROCESS OPERATING/PRODUCTION DATA

LIST OF TABLES

Table 2-1 Summary of Emission Test Results 6
Table 2-2 No. 1 Combination Boiler Summary of PM Emission Results 7
Table 2-3 No. 2 Combination Boiler Summary of PM Emission Results 8
Table 2-4 No. 2 Lime Kiln Summary of PM and NO_X Emission Results 9
Table 2-5 No. 2 Recovery Furnace Summary of PM Emission Results 10
Table 2-6 No. 2 Recovery Furnace Summary of TRS Emission Results 11
Table 2-7 No. 3 Recovery Furnace Summary of PM, NO_X, CO, and SO_2 Emission Results 12
Table 3-1 Source Testing Methodology 13

SECTION 1
INTRODUCTION

Weston Solutions, Inc. (WESTON®) was retained by Bowater Incorporated (Bowater) to conduct various emission testing on the No. 1 Combination Boiler, No. 2 Combination Boiler, No. 2 Lime Kiln, No. 2 Recovery Furnace, and the No. 3 Recovery Furnace at the mill in Catawba, South Carolina. The purpose of the emission testing was to demonstrate compliance with the South Carolina Department of Health and Environmental Control (DHEC) permit limits.

WESTON performed the emission testing during 30-31 March and 1, 6-7 April 2010. The project team included the following individuals.

Name	Project Role
Temp Simpkins	Project Manager/Test Team Leader
Melanie Wright	Quality Assurance Manager
Robert Griffin	Test Team Member
Logan Waites	Test Team Member
Gregory Sims	Technical Director
Natalie Vaught	Report Coordinator

Mr. Will Hinson of Bowater coordinated the testing with mill operations and served as WESTON's technical contact throughout the effort. A representative of DHEC was not present for testing.

The Louisiana Environmental Laboratory Accreditation Program (LELAP) accredits WESTON's emission testing laboratory. The stipulation associated with this accrediting authority precedes the table of contents of this report.

Table 2-1 presents the mean results of the emission testing with comparison to the permit limits for each source. The results are less than the applicable standard(s) for the sources.

TABLE 2-1
SUMMARY OF EMISSION TEST RESULTS

Source/Parameter	Mean Test Results	Permit Limit
No. 1 Combination Boiler		
PM Emission Factor, lb/MMBtu	0.171	**0.6**
No. 2 Combination Boiler		
PM Emission Factor, lb/MMBtu	0.215	**0.6**
No. 2 Lime Kiln		
PM Concentration, gr/dscf@10% O_2	0.002	**0.030**
NO_X Concentration, ppm@10%O_2	120	**152**
No. 2 Recovery Furnace		
PM Emission Factor, lb/ADTP	0.054	**2.75**
TRS Concentration, ppm@8%O_2	2.9	**20**
No. 3 Recovery Furnace		
PM Concentration, gr/dscf@8% O_2	0.021	**0.025**
NO_X Concentration, ppm@8% O_2	53	**78**
CO Emission Rate, lb/hr	109	**235**
SO_2 Emission Rate, lb/hr	<1.0	**270**

Tables 2-2 through 2-7 provides a detailed summary of the emission results, with comparison to the permit limits. Any differences between the calculated results presented in the appendices and the results reported in the summary table are due to rounding for presentation.

TABLE 2-2
NO. 1 COMBINATION BOILER
SUMMARY OF PM EMISSION RESULTS

	Run 1	Run 2	Run 3	Mean
Date	4/1/10	4/1/10	4/1/10	----
Time Began	1023	1218	1506	----
Time Ended	1127	1347	1609	----
Stack Gas Data				
Temperature, °F	414	414	418	415
Velocity, ft/sec	62	63	62	62
Moisture, %	23.6	15.0	15.1	17.9
CO_2, Concentration, %	9.8	9.5	9.2	9.5
O_2 Concentration, %	9.5	9.9	10.5	10.0
VFR, x 10^5 dscfm	1.31	1.51	1.47	1.43
Particulate Matter				
Isokinetic Sampling Rate, %	106	94	96	99
Concentration, gr/dscf	0.096	0.051	0.051	0.066
Emission Rate, lb/hr	108	66	65	80
Emission Factor, lb/MMBtu	0.240	0.132	0.140	0.171
Permit Limit, lb/MMBtu	**----**	**----**	**----**	**0.6**

TABLE 2-3
NO. 2 COMBINATION BOILER
SUMMARY OF PM EMISSION RESULTS

	Run 1	Run 2	Run 3	Mean
Date	4/6/10	4/6/10	4/6/10	----
Time Began	1124	1341	1527	----
Time Ended	1230	1445	1630	----
Stack Gas Data				
Temperature, °F	389	393	394	392
Velocity, ft/sec	79	76	77	78
Moisture, %	12.5	12.4	11.8	12.2
CO_2, Concentration, %	7.3	8.1	8.8	8.1
O_2 Concentration, %	12.5	11.7	11.1	11.8
VFR, x 10^5 dscfm	2.00	1.91	1.96	1.96
Particulate Matter				
Isokinetic Sampling Rate, %	101	101	100	101
Concentration, gr/dscf	0.100	0.060	0.045	0.068
Emission Rate, lb/hr	171	98	76	115
Emission Factor, lb/MMBtu	0.333	0.183	0.130	0.215
Permit Limit, lb/MMBtu	**----**	**----**	**----**	**0.6**

TABLE 2-4
NO. 2 LIME KILN
SUMMARY OF PM AND NO_x EMISSION RESULTS

	Run 1	Run 2	Run 3	Mean
Date	3/30/10	3/30/10	3/30/10	----
Time Began	1145	1329	1508	----
Time Ended	1250	1433	1631	----
Stack Gas Data				
Temperature, °F	391	378	372	380
Velocity, ft/sec	35	35	35	35
Moisture, %	29.6	29.7	30.6	29.9
CO_2, Concentration, %	19.3	19.0	17.9	18.7
O_2 Concentration, %	6.2	6.4	6.8	6.5
VFR, x 10^4 dscfm	2.49	2.49	2.49	2.49
Particulate Matter				
Isokinetic Sampling Rate, %	101	100	101	101
Concentration, gr/dscf	0.004	0.003	0.003	0.003
Concentration, gr/dscf @ 10% O_2	0.003	0.002	0.002	0.002
Permit Limit, gr/dscf @ 10% O_2	**----**	**----**	**----**	**0.030**
Emission Rate, lb/hr	0.81	0.54	0.65	0.67
Nitrogen Oxides				
Concentration, ppm	180	156	140	159
Concentration, ppm @ 10% O_2	134	117	108	120
Permit Limit, ppm @ 10% O_2	**----**	**----**	**----**	**152**

TABLE 2-5
NO. 2 RECOVERY FURNACE
SUMMARY OF PM EMISSION RESULTS

	Run 1	Run 2	Run 4[a]	Mean
Date	3/31/10	3/31/10	3/31/10	----
Time Began	0922	1125	1516	----
Time Ended	1037	1234	1627	----
Stack Gas Data				
Temperature, °F	347	349	352	349
Velocity, ft/sec	55	55	55	55
Moisture, %	24.6	24.3	24.8	24.6
CO_2, Concentration, %	12.4	12.4	12.7	12.5
O_2 Concentration, %	7.2	7.2	7.0	7.1
VFR, x 10^5 dscfm	1.15	1.15	1.14	1.14
Production Rate, ADTP/hr	26.93	26.80	26.55	26.76
Particulate Matter				
Isokinetic Sampling Rate, %	98	99	101	99
Concentration, gr/dscf	0.002	0.002	0.001	0.001
Emission Rate, gr/dscf@8% O_2	0.002	0.002	0.001	0.001
Emission Rate, lb/hr	2.2	1.6	0.59	1.45
Emission Factor, lb/ADTP	0.080	0.059	0.022	0.054
Permit Limit, lb/ADTP	----	----	----	**2.75**

[a]After completion of Run 3, the filter appeared to have been dislodged during the post-test leak check. A fourth run was conducted and reported in place of Run 3.

TABLE 2-6
NO. 2 RECOVERY FURNACE
SUMMARY OF TRS EMISSION RESULTS

	Run 1	Run 2	Run 3	Mean
Date	3/31/10	3/31/10	3/31/10	----
Time Began	0947	1156	1357	----
Time Ended	1117	1326`	1527	----
Total Reduced Sulfur				
Concentration, ppm	2.9	3.0	3.5	3.1
Concentration, ppm @ 8% O_2	2.7	2.8	3.3	2.9
Permit Limit, ppm @ 8% O_2	**----**	**----**	**----**	**20**

TABLE 2-7
NO. 3 RECOVERY FURNACE
SUMMARY OF PM, NO_x, CO, AND SO_2 EMISSION RESULTS

	Run 1	Run 2	Run 3	Mean
Date	4/7/10	4/7/10	4/7/10	----
Time Began	1413	1541	1718	----
Time Ended	1516	1643	1822	----
Stack Gas Data				
Temperature, °F	364	364	366	365
Velocity, ft/sec	83	82	82	82
Moisture, %	22.0	24.0	23.0	23.0
CO_2, Concentration, %	13.1	13.4	13.3	13.3
O_2 Concentration, %	6.6	6.4	6.6	6.5
VFR, x 10^5 dscfm	2.15	2.07	2.08	2.10
Particulate Matter				
Isokinetic Sampling Rate, %	98	102	99	100
Concentration, gr/dscf	0.023	0.021	0.024	0.023
Emission Rate, gr/dscf @ 8% O_2	0.021	0.019	0.022	0.021
Permit Limit, gr/dscf @ 8% O_2	**----**	**----**	**----**	**0.025**
Nitrogen Oxides				
Concentration, ppm	56	63	59	59
Concentration, ppm @ 8% O_2	51	56	53	53
Permit Limit, ppm @ 8% O_2	**----**	**----**	**----**	**78**
Carbon Monoxide				
Concentration, ppm	77	139	143	120
Concentration, ppm @ 8% O_2	70	124	129	107
Emission Rate, lb/hr	72	125	130	109
Permit Limit, lb/hr	**----**	**----**	**----**	**235**
Sulfur Dioxide				
Concentration, ppm	<0.2	<0.9	<0.3	<0.5
Concentration, ppm @ 8% O_2	<0.2	<0.8	<0.3	<0.4
Emission Rate, lb/hr	<0.4	<1.9	<0.6	<1.0
Permit Limit, lb/hr	**----**	**----**	**----**	**270**

SECTION 3
SOURCE TESTING METHODOLOGY

The emission testing program was conducted in accordance with the U.S. EPA Reference Methods summarized in Table 3-1. Method descriptions and quality assurance data are provided in the referenced appendices.

TABLE 3-1
SOURCE TESTING METHODOLOGY

Parameter	Method Number	Appendix Reference		Data Qualifier	Comments
		Method Description	Quality Control Data		
Volumetric Flow Rate	1,2,3A,4	B.1	H	NN	
Particulate Matter	5	B.2	H	NN	
Total Reduced Sulfur	16	B.3	H	NN	Gas Chromatography
Nitrogen Oxides	7E	B.4	H	NN	Instrumental
Carbon Monoxide	10	B.5	H	NN	Instrumental
Sulfur Dioxide	6C	B.6	H	NN	Instrumental

These results meet all requirements of NELAC unless otherwise specified.

The results within this report relate only to the samples listed in the body of this report.

This report shall not be reproduced by any organization outside of Weston Solutions, Inc. except in full, without the written approval of Weston Solutions, Inc.

APPENDIX A
SAMPLE CALCULATIONS

SAMPLE CALCULATIONS

Meter Pressure (Pm), in. Hg

$$Pm = Pb + \frac{\Delta H}{13.6\ in.\ H_2O/in.\ Hg}$$

where, Pb = barometric pressure, in. Hg
ΔH = Pressure differential of orifice in. H_2O

Absolute Stack Gas Pressure (Ps), in. Hg

$$Ps = Pb + \frac{Pg}{13.6\ in.\ H_2O/in.\ Hg}$$

where, Pb = barometric pressure, in. Hg
Pg = Static Pressure, in. H_2O

Standard Meter Volume (Vmstd), dscf

$$Vmstd = \frac{17.64\,°R/in.\ Hg\ \ x\ Y\ \ x\ Vm\ \ x\ Pm}{Tm}$$

where, Y = meter correction factor
Vm = meter volume, cf
Pm = meter pressure, in. Hg
Tm = meter temperature, °R

Standard Wet Volume (Vwstd), scf

$$Vwstd = 0.04707\ ft^3/mL\ \ x\ Vlc$$

where, Vlc = volume of H_2O collected, mL

Moisture Fraction (Measured), (Bws)

$$Bws = \frac{Vwstd}{(Vwstd + Vmstd)}$$

where, Vwstd = standard wet volume, scf
Vmstd = standard meter volume, dscf

Moisture, % (M%)

$$M\% = Bws\ \ x\ 100$$

where, Bws = moisture fraction, measured or at saturation, whichever is lowest

Molecular Weight (DRY) (Md), lb/lb-mole

$$Md = (0.44 \times \% CO_2) + (0.32 \times \% O_2) + (0.28(100 - \% CO_2 - \% O_2))$$

Molecular Weight (WET) (Ms), lb/lb-mole

$$Ms = Md\ (1 - Bws) + 18(Bws)$$

where, Md = molecular weight (DRY), lb/lb-mole
Bws = moisture fraction, dimensionless

Average Velocity (Vs), ft/sec

$$Vs = 85.49 \frac{ft}{sec} \sqrt{\frac{(lb/lb\text{-}mole)(in.\ Hg)}{(°R)(in.\ H_2O)}}\ x\ Cp\ x\ \sqrt{Delta\ P}\ avg.\ x\ \sqrt{\frac{Ts}{Ps\ x\ Ms}}$$

where, Cp = pitot tube coefficient
Delta P = velocity head of stack gas, in. H_2O
Ts = absolute stack temperature, °R
Ps = absolute stack gas pressure, in. Hg
Ms = molecular weight of stack gas, lb/lb-mole

Average Stack Gas Flow at Stack Conditions (Qa), acfm

$$Qa = 60\ sec/min\ x\ Vs\ x\ As$$

where, Vs = stack gas velocity, ft/sec
As = cross-sectional area of stack, ft^2

Average Stack Gas Flow at Standard Conditions (Qs), dscfm

$$Qs = 17.64 \frac{°R}{in.\ Hg}\ x\ Qa\ x\ (1 - Bws)\ x\ \frac{Ps}{Ts}$$

where, Qa = average stack gas flow at stack conditions, ft^3/min
Bws = moisture content (dimensionless)
Ps = absolute stack gas pressure, in. Hg
Ts = absolute stack temperature, °R

Percent Isokinetic Sampling Rate (%I)

$$\%I = \frac{0.0945(in.\ Hg)(min)/(°R)(sec)\ x\ Ts\ x\ Vmstd}{Ps\ x\ Vs\ x\ An\ x\ \Theta\ x\ (1 - Bws)}$$

where, Ts = avg. stack temperature, °R
Vmstd = standard meter volume, dscf
Ps = absolute stack gas pressure, in. Hg
Vs = stack gas velocity, ft/sec
An = cross-sectional area of nozzle, ft^2
Θ = total sampling time, min
Bws = moisture content (dimensionless)

Particulate Matter Concentration at Standard Conditions (Cs), gr/dscf

$$Cs = 15.43 \frac{gr}{g} \; x \; \frac{Mn}{Vmstd}$$

where, Mn = particulate matter collected, g
Vmstd = std. meter volume, dscf

Particulate Matter Concentration Corrected for O_2, Cs @ 8% O_2

$$Cs, \frac{gr}{dscf} \; x \; \frac{20.9 - 8\% \, O_2}{20.9 - measured \, \% \, O_2}$$

Note: O_2 corrections are based on source category or specific sources, i.e. 10% for Lime Kilns 8 % for Recovery Boilers

Particulate Matter Emission Rate (PMR), lb/hr

$$PMR = \frac{Cs \;\; x \;\; Qs \;\; x \;\; 60 \frac{min}{hr}}{7000 \frac{gr}{lb}}$$

where, Cs = particulate conc. at std. cond., gr/dscf
Qs = avg. stack gas flow at std. cond., dscf/min

NO_x Emission Rate (EMR), lb/hr

$$EMR = \frac{conc. \, x \, Mw \, x \, Qs \, x \, 60 \frac{min}{hr} \, x \, 28.32 \frac{L}{dscf}}{24.04 \frac{L}{g - mole} \, x \, 1.0 \, x \, 10^6 \, \frac{\mu L}{L} \, x \, 454 \frac{s}{lb}}$$

APPENDIX B
TEST METHODOLOGY

B.1 VOLUMETRIC FLOW RATE

B.2 PARTICULATE MATTER

B.3 TOTAL REDUCED SULFUR

B.4 NITROGEN OXIDES

B.5 CARBON MONOXIDE

B.6 SULFUR DIOXIDE

B.1 VOLUMETRIC FLOW RATE

Mass emission rates are calculated by multiplying measured target analyte concentrations by calculated volumetric flow rates. Volumetric flow rates are calculated using measurement data obtained by EPA Reference Methods 1-4.

The ductwork is measured at the sample location to the nearest 0.25 inch using a steel tape measure. Traverse points are selected in accordance with EPA Reference Method 1 on the basis of ductwork dimensions, geometry, and upstream and downstream disturbances. When a sample location does not meet EPA Reference Method 1 criteria, the maximum recommended number of traverse points is used.

Gas Velocity

The velocity of the gas stream is measured in accordance with EPA Reference Method 2 by reading the instantaneous velocity pressure with an inclined manometer at each traverse point using either a standard "P" type or an "S" type pitot tube. The stack pressure is calculated from the measured static pressure of the stack and the ambient barometric pressure. The static pressure is measured by using the static side of the pitot tube, and the barometric pressure is measured using a calibrated aneroid barometer. Magnahelic® gauges with scales of 0 to 5 and 0 to 25 inches of water or an inclined manometer with a scale of 0 to 10 inches of water are used for velocity pressure measurements. Manometer selection is determined by the velocity pressure of the gas stream. A manometer with a 0 to 0.25 inch scale may be used when the velocity pressure of the gas stream is less than 0.02 inches of water. By convention, any measured velocity pressures of less than 0.005 inches of water are recorded and reported as less than 0.005 inches of water. The stack temperature is measured with a calibrated thermocouple and pyrometer.

For low velocity pressure measurements (less than 0.005 inches of water) a hot wire anemometer may be used to measure the velocity of the gas stream. The indicated velocity is used without correction when the gas stream is ambient air with a moisture content of less than 65%. The indicated velocity is corrected in accordance with procedures specified by the manufacturer when the moisture content exceeds 65% or when the dry gas fraction is something other than ambient air.

Gas Composition and Moisture Content

The composition of the gas stream is measured in accordance with EPA Reference Method 3A using an analyzer.

Integrated samples are collected by withdrawing a sample from the source through a moisture condenser into a Tedlar® sample bag. The bag is then analyzed using a calibrated O_2/CO_2 analyzer.

The moisture content of the gas stream is determined using one of the following procedures:

- For sources requiring testing by EPA Reference or Test Methods 5, 8, 12, 13, 17, 23, 26A, 29, 0010, or 0011, moisture is determined by EPA Reference Method 4. At the conclusion of each run the volume of condensed moisture in the impingers of the sampling train is measured and used to calculate the moisture content of the gas stream.

- For sources with temperatures greater than 212 °F, the approximation technique described in EPA Reference Method 4 may be used with midget impingers to condense moisture before dry gas volume measurement.

- For sources with a temperature of less than 212 °F, wet bulb/dry bulb temperature measurements may be made, and the moisture content calculated using vapor pressure tables.

When multiple methods are used for moisture determinations, the lowest moisture value is used for volumetric flow calculations.

The molecular weight of the gas stream is calculated using the measured moisture, oxygen, and carbon dioxide concentrations. The balance of the gas stream is assumed to be nitrogen. The volumetric flow is then calculated at stack and standard conditions using the calculated molecular weight, the measured stack temperature, and measured velocity, stack and barometric pressures. Standard conditions are 68 °F and 29.92 inches of mercury and 0% moisture.

Data Acquisition and Reporting

Data are recorded at the time of collection on preprinted data sheets. Calculations are performed (where possible) with preprogrammed calculators or spreadsheet software.

Quality Control

Quality control procedures for volumetric flow measurements involve leak checks of pitot tubes, pitot tube lines and manometers; periodic analysis of ambient air and duplicate analysis of source gas samples with the Fyrite analyzer; triplicate analysis with the Orsat analyzer; and periodic calibration checks of thermocouples and pyrometers.

Data transfers are minimized. Data sheets are checked for completeness and accuracy. Calculations are verified by a second person.

B.2 PARTICULATE MATTER

Particulate matter (PM) emission testing is conducted using EPA Reference Method 5. EPA Reference Methods 1-4 are used, as appropriate, for traverse point selection, determination of stack gas molecular weight, stack gas moisture determination, and volumetric flow rate.

Sampling Equipment and Procedures

The sampling train utilized to perform the PM sampling is an EPA Reference Method 5 train manufactured by Graseby-Nutech, Graseby-Anderson, or Apex Instruments (see Figure B-1). A measured borosilicate, quartz glass, or stainless steel (316) nozzle is attached to a heated (248 ± 25 °F) borosilicate or quartz glass, or stainless steel probe of appropriate length. The probe is connected to a heated (248 ± 25 °F) borosilicate glass filter holder containing a 9-cm glass fiber filter (preweighed to a constant 0.1 mg weight). The first and second impingers each contain 100 mL of distilled water, the third impinger is empty, and the fourth impinger contains 200 to 300 grams of dry preweighed silica gel. The second impinger is a standard Greenburg-Smith type. The first, third, and fourth impingers are of a modified design. All impingers are maintained in a crushed ice bath. A gas measuring control console with a leak-free vacuum pump, a calibrated dry gas meter, a calibrated orifice, and inclined manometers are connected to the final impinger, probe, heated filter holder, and pitot tube via an umbilical cord to complete the train.

Flue gas velocity is measured with a calibrated S-type pitot tube (provided with extensions) fastened alongside the sampling nozzle. Flue gas temperature is monitored with a calibrated direct readout pyrometer equipped with a chromel-alumel (Type K) thermocouple positioned near the sampling nozzle. The probe, filter box, and impinger exit gas temperatures are monitored with a calibrated direct readout pyrometer equipped with Type K thermocouples positioned in the probe, heated filter chamber, and in the sample gas stream after the last impinger. Stack gas stream composition (carbon dioxide and oxygen content) is determined as previously described. The sampling rate is adjusted, based on stack velocity, at each point to ensure the sample is collected isokinetically.

At the conclusion of each test, the sampling train is leak checked. Upon completion of a successful leak check, the sampling train is dismantled, openings are sealed, and the components recovered as described below.

- The glass fiber filter(s) is/are removed from its holder with tweezers and placed in its original container, along with any particulate and filter fragments (Sample Fraction 1).

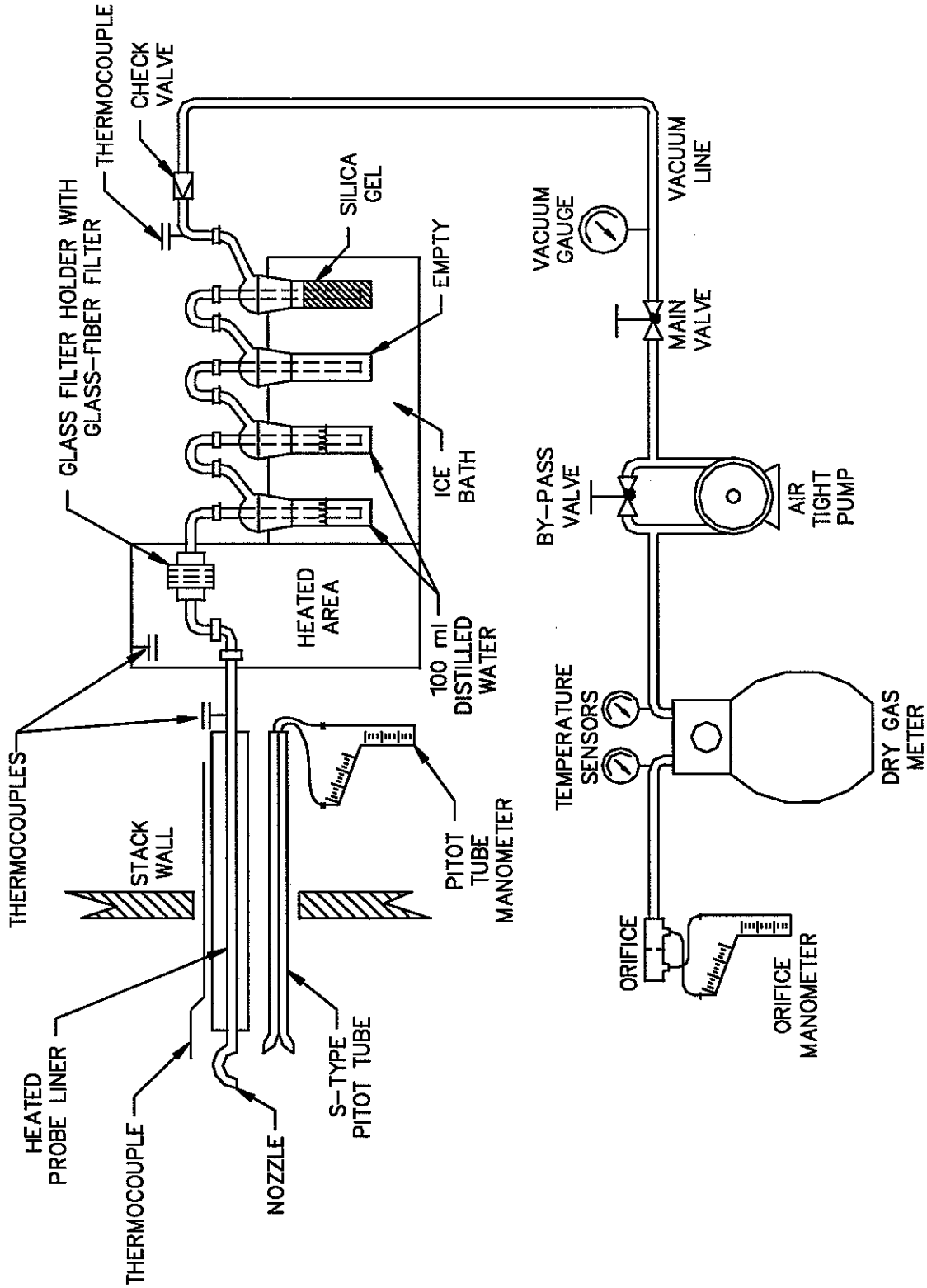

Figure B-1 EPA Reference Method 5 Sampling Train

- The probe and nozzle are separated and the particulate rinsed with distilled water or acetone into a polyethylene container while brushing a minimum of three times. Particulate adhering to the brush is rinsed with the appropriate solvent into the same container. The front half of the filter holder and connecting glassware are also rinsed. These rinses are combined (Sample Fraction 2).

- The total liquid content of impingers one, two, and three are measured volumetrically for stack gas moisture content calculation. This liquid is discarded.

- The silica gel is removed from the last impinger and immediately weighed to the nearest 0.1 g for stack gas moisture content calculation.

- Aliquots of the appropriate solvents and a filter are retained for blank analyses.

Each sample bottle is labeled to clearly identify its contents. The liquid level is marked on each bottle. The samples are then secured for transport to a laboratory for analysis. Sample integrity is assured by maintaining chain-of-custody records.

Sample Analysis

The particulate analysis proceeds as follows:

- The sample filters (Sample Fraction 1) and blank filter are desiccated for 24 hours and weighed to the nearest 0.1 mg to constant (± 0.5 mg) weight.

- The nozzle, probe, and front half of the filter holder wash samples (Sample Fraction 2), along with the solvent blank, are evaporated in tared beakers, then desiccated and weighed to the nearest 0.1 mg to constant (± 0.5 mg) weights.

The total weight of material measured in the front half wash in addition to the weight of material collected on the glass fiber filter represent the total PM catch for each train. Blank corrections are made where appropriate for all sample weights.

Data Acquisition and Reduction

Data are recorded at the time of collection on preprinted data sheets. Calculations are performed with preprogrammed calculators or spreadsheet software. Data transfers are minimized. Field and laboratory data sheets are be checked for completeness and accuracy. Calculations are verified by a second person.

Quality Control

Dry gas meters are calibrated before and after sampling. Thermocouples are calibrated against mercury thermometers, and aneroid barometers are calibrated against a mercury barometer. WESTON participated satisfactorily in the most recent dry gas meter audit supplied by the EPA. Those data are on file at WESTON.

Prior to and following each run, the sampling train is leak checked. An acceptable leak rate does not exceed the lesser of 0.02 actual cubic feet per minute (acfm) or 4% of the actual sampling rate. The isokinetic sampling rate is calculated at the completion of each sample run. If the isokinetic sampling rate is not within 100% ± 10%, the sample run is repeated.

Samples are transported to the laboratory under chain-of-custody. Solvent blanks and filter blanks are analyzed at the same time as the samples. The mass collected on the filters and the mass in the probe wash are corrected by the blank measurements.

WESTON uses Class S weights during each stage of the analysis to verify the accuracy of the balance. The balance is repaired and recalibrated before proceeding if there is a significant difference in the actual mass and measured mass.

B.3 TOTAL REDUCED SULFUR

Total reduced sulfur testing is performed using the procedures described in EPA Reference Method 16. When TRS data must be oxygen corrected, EPA Reference Method 3 using an Orsat analyzer, is performed on an integrated bag sample to measure oxygen concentration.

Sampling Equipment and Procedures

Figure B-2 illustrates the sampling system. A Teflon®-lined, stainless steel probe of sufficient length to monitor the gas stream (without wall effects) is used to extract a gas sample from the emission source. The probe tip is directed away from stack gas flow to minimize particulate and moisture entrainment. The probe is connected directly to the recovery gas line and sample conditioning system.

The sample conditioning system consists of a Teflon® impinger containing 1.5M citrate buffer, adjusted to a pH of 5.4 to 5.8, maintained in an ice bath. Moisture is condensed in the impingers, yielding a dry sample and thus eliminating the need for heated sample lines. Even though the impinger set traps entrained particulate matter, very fine particulate matter is removed by a Balston® AQ Microfiber filter installed at the impinger outlet.

An unheated nylon line is connected from the filter to the sample pump inlet. Sample line length and connections are minimized to reduce surface adsorption of TRS and the possibility of leaks.

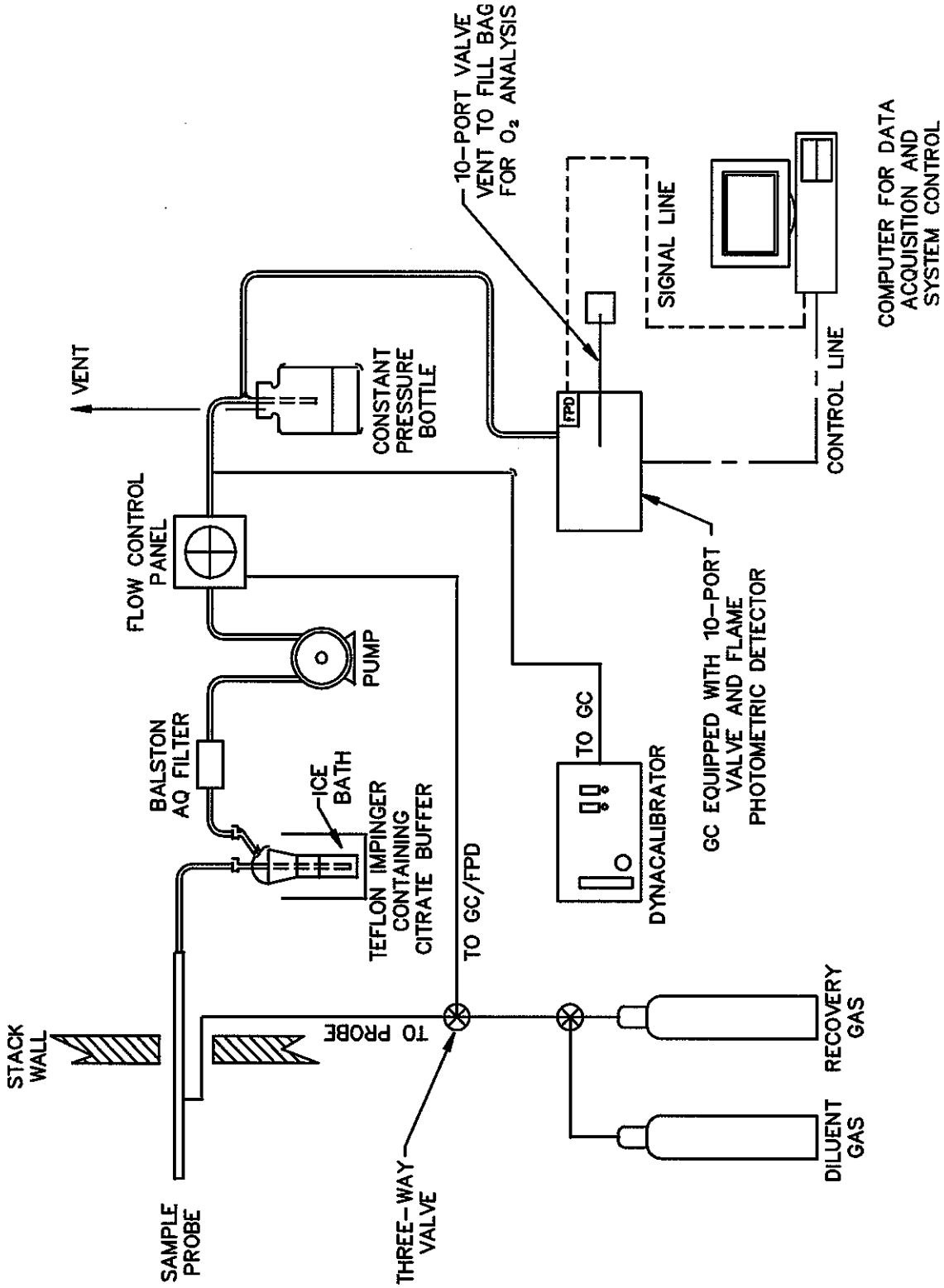

Figure B-2 EPA Reference Method 16 Sampling and Analytical Train

The pump outlet is connected directly to a constant pressure bottle. At this point, a major portion of the sample is vented to the atmosphere, and the remainder is used to charge the gas chromatograph (GC) sample loop. The GC sample loop outlet is connected to a Tedlar® gas collection bag gas sample collection and subsequent analysis using an Orsat apparatus.

Sample Analysis

Separation of hydrogen sulfide (H_2S), methyl mercaptan (MeSH), dimethyl sulfide (DMS), and dimethyl disulfide (DMDS) is accomplished by gas chromatography on a SPB1 Capillary column. After resolution of H_2S, MeSH, and DMS, the Capillary column is backflushed to achieve resolution of DMDS within 2-3 minutes from sample injection. The gas chromatograph is operated on periodic cycle to produce a minimum of ten injections per hour.

Detection of reduced sulfur compounds is accomplished with a flame photometric detector (FPD). The FPD response is calibrated before and after every three hours of testing, using gas phase standards prepared from gravimetrically certified permeation devices.

Data Acquisition and Reduction

The FPD responses are recorded by an IBM compatible computer equipped with software designed by WESTON for reduced sulfur compound analysis. The software controls the timing of the gas-chromatographic cycle, integrates and records peaks, performs calculations, and prints the results. Calibration curves are generated by the software using log-log linear least squares best fit of the data.

Quality Control

Permeation devices certified by the vendor are used to calibrate the FPD response. The temperature of the devices is maintained at a constant value (as certified by vendor) to ensure a constant, accurate permeation rate. The temperature of the permeation chamber is verified at the time of sampling with an National Institute of Standards and Technology (NIST) traceable mercury-in-glass thermometer. The temperature of the permeation chamber is maintained at 50.0 ± 0.1 °C throughout the sampling.

VICI-Metronics, Santa Clara, California, supplied the permeation devices for the testing. The devices are gravimetrically analyzed to measure the emission rate before shipment.

Various concentrations of the permeants are generated by varying the flow of the diluent gas stream over the devices. A calibration curve is constructed of at least three concentrations of each permeant; three successive injections at each concentration yield peak areas that differ from the mean peak area value by less than 5%.

Sampling system integrity is evaluated after every three hours of sampling by injecting a low concentration of H_2S at the probe tip and recovering the sample through the sample conditioning and sample transport subsystems. The same gas stream is then introduced directly to the GC sample loop. The ratio of concentrations corresponds to the system correction factor. This factor is then used to adjust measured reduced sulfur compound concentrations.

A system audit gas (of appropriate H_2S concentration) is used to evaluate the analytical system integrity each test day. Audit gas results will be within 10% of the certified cylinder concentration.

B.4 NITROGEN OXIDES (INSTRUMENTAL)

Nitrogen oxides (NO_x) testing on some sources may be conducted in accordance with EPA Reference Method 7E.

Sampling Equipment and Procedures

Figure B-3 illustrates the sampling system. The sample is withdrawn from the source through a heated probe, filter, and sample line to a sample conditioner, which removes moisture from the gas stream. The sample is then transported to a California Analytical Model 400-CLD Analyzer through a Teflon® line.

Sample Analysis

The analyzer uses an oxidizing converter to produce nitric oxide (NO) molecules. A chemiluminescent reaction of NO and ozone is then used to produce nitrogen dioxide (NO_2), oxygen (O_2), and infrared light. This infrared light is measured using a highly sensitive optical filter/photomultiplier whose output is linearly proportional to the NO concentration.

Data Acquisition and Reduction

Data are acquired electronically using an IBM compatible computer and software designed by WESTON for EPA Reference Method 7E analysis. This system generates a calibration curve, converts electronic signals into concentrations, and provides bias-corrected hourly averages.

Quality Control

At the time of analysis, NO in nitrogen calibration gases, certified according to EPA Protocol-1, are used to calibrate the analyzer and to determine a bias correction factor for the entire system. Calibration and system response is performed in accordance with EPA Reference Method 7E.

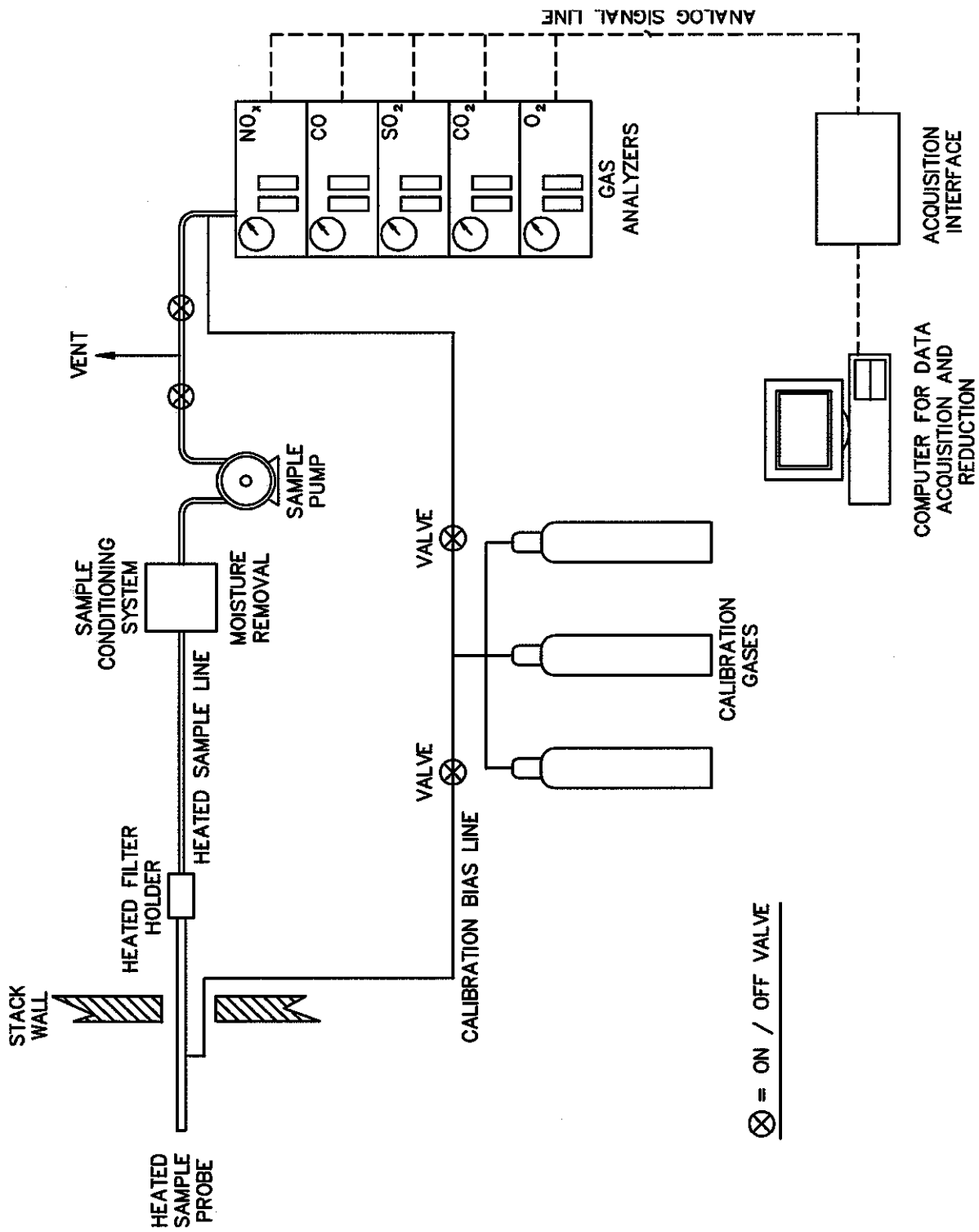

Figure B-3 EPA Reference Method 6C Sampling Train

Calibration gases are introduced directly to the analyzer to generate the calibration curve. A calibration gas is introduced at the probe and recovered through the sampling and analytical system. A bias correction factor is calculated using the ratio of the measured concentration of the bias gas and concentration certified by the vendor. An interference response study was performed by the manufacturer of the analyzer. The data from this study are on file at WESTON.

B.5 CARBON MONOXIDE

Carbon monoxide testing is conducted in accordance with EPA Reference Method 10.

Sampling Equipment and Procedures

Figure B-3 illustrates the sampling system. Sampling is performed by extraction of an integrated stack gas sample collected in a Tedlar® bag, or by continuous sample extraction and analysis. For both sampling procedures the sample is withdrawn from the stack, through a conditioning system for moisture removal, using a leak-tight sample pump. The dry gas sample is then collected at the outlet of the sample pump using a Tedlar® bag or transported through sample lines to the analyzer for continuous on-line monitoring.

Sample Analysis

The California Analytical Model 300 CO Non-Dispersive Infrared (NDIR) analyzer uses gas filter correlation spectroscopy to measure the amount of CO present in the sample. Infrared radiation is chopped and passed through an alternating CO and N_2 correlation filter wheel and the sample stream. Carbon monoxide in the sample absorbs the infrared radiation, leaving the remaining radiation to be measured by a detector producing a linear output signal.

Data Acquisition and Reduction

Data are acquired electronically using an IBM compatible computer and software designed by WESTON for EPA Reference Method 10 analysis or alternatively the analyzer analog signal is recorded using a strip-chart recorder.

For data collection using a computer and acquisition interface, the software generates a calibration curve and continuous calculation of sample concentration. All subsequent calculation procedures required for compliance with EPA Reference Method 10 are performed electronically.

For data collection using a strip chart recorder, the calibration curve and subsequent calibration procedures are performed manually or by using pre-programmed calculators.

Quality Control

At the time of analysis, certified CO in nitrogen calibration gases are used to calibrate the analyzer. Calibration is performed in accordance with EPA Reference Method 10.

A CO_2 interference response study was performed by the manufacturer of the analyzer. The data from this study are on file at WESTON.

B.6 SULFUR DIOXIDE (INSTRUMENTAL)

Sulfur dioxide (SO_2) testing is conducted in accordance with EPA Reference Method 6C.

Sampling Equipment and Procedures

Figure B-3 illustrates the sampling system. The sample is withdrawn from the source through a heated probe, heated filter, and heated sample line to a sample conditioner which removes moisture from the gas stream. The sample is then transported to the analyzer through a Teflon® line.

Sample Analysis

The Ametak Model 721 ATM analyzer measures, at two discrete wavelengths, the absorbtion of ultraviolet radiation by the gas sample. The concentration of the components absorbing the light are then determined from relationships developed through application of the ideal gas law in concert with the laws of Bouguer, Beer, and Lambert.

Data Acquisition and Reduction

Data are acquired electronically using an IBM compatible computer and software designed by WESTON for EPA Reference Method 6C analysis. This system generates a calibration curve, converts electronic signals into concentrations, and provides bias-corrected averages.

Quality Control

At the time of analysis, SO_2 in nitrogen calibration gases (certified according to EPA Protocol-1) are used to calibrate the analyzer and to determine a bias correction factor for the entire system in accordance with EPA Reference Method 6C.

Calibration gases are introduced directly to the analyzer to generate the calibration curve. Zero level and upscale calibration gases are introduced at the probe and recovered through the sampling and analytical system. A bias correction factor is then calculated using the ratio of the measured concentration of the bias gas introduced through the sampling system and the measured concentration of the bias gas introduced directly to the analyzer. Run averages are adjusted for this bias correction factor.

APPENDIX C
FIELD DATA –
NO. 1 COMBINATION BOILER

Bowater
Catawba, SC

03917.008.015
No. 1 Combination Boiler

ISOKINETIC CALCULATIONS

Run Number		1	2	3	Mean
Date		4/1/2010	4/1/2010	4/1/2010	---
Time Began		1023	1218	1506	---
Time Ended		1127	1347	1609	---
	INPUT DATA				
Sampling Time, min	(Theta)	60.0	60	60	60
Stack Diameter, in.	(Dia.)	120.00	120.00	120.00	120.00
Barometric Pressure, in. Hg	(Pb)	29.41	29.41	29.41	29.41
Static Pressure, in. H2O	(Pg)	-0.82	-0.82	-0.82	-0.82
Pitot Tube Coefficient	(Cp)	0.84	0.84	0.84	0.84
Meter Correction Factor	(Y)	0.9770	0.9770	0.9770	0.9770
Orifice Calibration Value	(Delta H@)	1.8830	1.8830	1.8830	1.8830
Nozzle Diameter, in.	(Dn)	0.250	0.250	0.250	0.250
Meter Volume, ft^3	(Vm)	38.557	40.322	40.402	39.760
Meter Temperature, °F	(Tm)	83.1	93.8	98.4	91.8
Meter Temperature, °R	(Tm-R)	543.1	553.8	558.4	551.8
Meter Orifice Pressure, in. H2O	(Delta H)	1.312	1.408	1.422	1.381
Ave Sq Rt Orifice Press, (in. H2O)^½	((Delta H)½)avg)	1.141	1.183	1.187	1.170
Volume H2O Collected, mL	(Vlc)	236.7	138.6	139.3	171.5
CO2 Concentration, %	(CO2)	9.8	9.5	9.2	9.5
O2 Concentration, %	(O2)	9.5	9.9	10.5	10.0
Ave Sq Rt Velo Head, (in. H2O)^½	((Delta P)½)avg)	0.819	0.859	0.842	0.840
Stack Temperature, °F	(Ts)	413.7	414.1	418.4	415.4
Stack Temperature, °R	(Ts-R)	873.7	874.1	878.4	875.4
Particulate Collected, g	(Mn)	0.2249	0.1226	0.1225	0.1567
O2 F Factor, dscf/MMBtu	(Fd)	9535	9514	9522	9524
	CALCULATED DATA				
Nozzle Area, in^2	(An)	4.91E-02	4.91E-02	4.91E-02	4.91E-02
Stack Area, ft^2	(As)	78.54	78.54	78.54	78.54
Stack Pressure, in. Hg	(Ps)	29.35	29.35	29.35	29.35
Meter Pressure, in. Hg	(Pm)	29.51	29.51	29.51	29.51
Standard Meter Volume, ft^3	(Vmstd)	36.102	37.034	36.803	36.647
Standard Water Volume, ft^3	(Vwstd)	11.141	6.524	6.557	8.074
Moisture Fraction (Measured)	(BWS)	0.236	0.150	0.151	0.179
Moisture Fraction (lower sat/meas)	(BWS)	0.236	0.150	0.151	0.179
Mol. Wt. of Dry Gas, lb/lb-mole	(Md)	29.95	29.92	29.89	29.92
Mol. Wt. of Stack Gas, lb/lb-mole	(Ms)	27.13	28.13	28.09	27.79
Average Stack Gas Velocity, ft/sec	(Vs)	61.61	63.47	62.41	62.50
Stack Gas Flow, actual, ft^3/min	(Qa)	290316	299098	294095	294503
Stack Gas Flow, Std , ft^3/min	(Qs)	131462	150622	147127	143071
Isokinetic Sampling Rate, %	(%I)	105.5	94.4	96.1	98.7
Particulate Conc @ Std Cond, gr/ft^3	(Cs)	0.096	0.051	0.051	0.066
Particulate Emission, lb/hr	(PMR)	108.294	65.936	64.757	79.66
Particulate Emission Factor, lb/MMBtu	(Fd)	0.2400	0.1319	0.1404	0.1708
Calibration check	(Yqa)	0.9757	0.9772	0.9830	0.979
Percent difference from Y					0.16%

ISOKINETIC FIELD DATA SHEET

Client	Bowater
W.O.#	03917.008.015
Project ID	NA
Mode/Source ID	NA
Samp. Loc. ID	stack
Run No.ID	ONE
Test Method ID	M5
Filter No.	DA-1482
Source/Location	No. 1 Comb. Boiler
Sample Date	1-Apr-10
Baro. Press (in Hg)	29.41
Operator	LW/ RG

Stack Conditions

	Assumed	Actual
% Moisture	14	
Impinger Vol (ml)		224
Silica gel (g)		12.7
CO2, % by Vol	8.5	
O2, % by Vol	11.5	
Temperature (°F)	411.0	
Meter Temp (°F)		
Static Press (in H_2O)	-.97	-.82
Ambient Temp (°F)		

Meter Box ID	AO 12	
Meter Box Y	0.977	
Meter Box Del H	1.883	
Probe ID / Length	12-C	12
Probe Material	Stainless Steel	
Pitot / Thermocouple ID	P-12	
Pitot Coefficient	0.84	
Nozzle ID	~~.245~~ .250	
Avg Nozzle Dia (in)	~~.245~~ .250	
Area of Stack (ft^2)	78.54	
Sample Time	60	
Total Traverse Pts	24	

K Factor

Leak Checks	Initial	Mid-Point	Final
Sample Train (ft^3)	.012		.009
Leak Check @ (in Hg)	15		11
Pitot good	yes / no	yes / no	yes / no
Orsat good	yes / no	yes / no	yes / no

Temp Check	Pre-Test Set	Post-Test Set
Meter Box Temp		
Reference Temp		
Pass/Fail (+/- 2°)	Pass / Fail	Pass / Fail
Temp Change Response ?	yes / no	yes / no

TRAVERSE POINT No.	SAMPLE TIME (min)	CLOCK TIME (plant time)	VELOCITY PRESSURE Delta P (in H2O)	ORIFICE PRESSURE Delta H (in H2O)	DRY GAS METER READING (ft³)	STACK TEMP (°F)	DGM INLET TEMP (°F)	DGM OUTLET TEMP (°F)	PROBE TEMP (°F)	FILTER BOX TEMP (°F)	IMPINGER EXIT TEMP (°F)	SAMPLE TRAIN VAC (in Hg)		COMMENTS
	0	1023			755.503									
1	2.5		.58	1.10	757.4	411	72	67	260	265	63	5		
2	5		.60	1.14	758.8	412	73	66	261	263	61	5		
3	7.5		.66	1.26	760.3	412	76	67	268	264	58	5		
4	10		.64	1.22	761.8	413	78	68	261	264	57	6		
5	12.5		.64	1.22	763.4	414	80	70	259	266	55	6		
6	15		.67	1.19	764.9	414	82	71	265	265	55	6		
7	17.5		.81	1.56	766.6	414	84	72	269	265	55	6		
8	20		.75	1.44	768.2	417	85	73	260	266	55	7		
9	22.5		.61	1.18	769.9	416	87	75	260	265	55	7		
10	25		.63	1.22	771.5	416	88	76	264	265	56	7		
11	27.5		.51	.99	773.0	415	89	77	257	266	56	7		
12	30	1053	.50	.97	774.380	414	90	78	260	264	57	7		
1	32.5	1057	.57	1.12	775.9	410	93	82	255	263	60	6		
2	35		.57	1.12	777.3	411	92	82	265	264	59	6		
3	37.5		.56	1.10	778.8	410	93	83	257	265	59	6		
4	40		.68	1.34	780.4	411	93	84	269	265	59	6		
5	42.5		.67	1.31	782.0	413	94	85	264	265	59	6		
6	45		.68	1.34	783.6	413	94	85	262	265	59	7		
7	47.5		.88	1.73	785.4	414	94	86	263	266	60	7		
8	50		.80	1.57	787.2	417	93	86	268	265	60	8		
9	52.5		.80	1.57	789.1	416	94	87	266	266	61	8		
10	55		.82	1.61	790.9	415	94	87	259	264	62	8		
11	57.5		.82	1.61	792.6	415	94	88	261	265	63	8		
12	60	1127	.80	1.57	794.460	415	93	88	256	266	64	8		
			Avg Sqrt Delta P .819	Avg Delta H 1.312	Total Volume 38.557	Avg Ts 413.7	Avg Tm 83.1		Min/Max 256/269	Min/Max 263/266	Max Temp 64	Max Vac 8	Max Temp	
				Avg Sqrt Del H 1.141										

WESTON MANAGERS DESIGNERS/CONSULTANTS

.675

Comments: BW 23.8
ISO 104.4

61.6 FPS
290330 ACFM
130990 SCFM

63

33

ISOKINETIC FIELD DATA SHEET

Client	Bowater
W.O.#	03917.008.015
Project ID	NA
Mode/Source ID	NA
Samp. Loc. ID	stack
Run No.ID	TH-0
Test Method ID	M5
Filter No.	DA-1483
Source/Location	No. 1 Comb. Boiler
Sample Date	1-Apr-10
Baro. Press (in Hg)	29.41
Operator	LW/ RG

Stack Conditions

	Assumed	Actual
% Moisture	21	
Impinger Vol (ml)		130
Silica gel (g)		8.6
CO2, % by Vol	8.5	
O2, % by Vol	11.3	
Temperature (°F)		
Meter Temp (°F)		
Static Press (in H_2O)		-.82
Ambient Temp (°F)		

Meter Box ID	AO 12
Meter Box Y	0.977
Meter Box Del H	1.883
Probe ID / Length	12-C / 12
Probe Material	Stainless Steel
Pitot / Thermocouple ID	9-12
Pitot Coefficient	0.84
Nozzle ID	.250
Avg Nozzle Dia (in)	.250
Area of Stack (ft^2)	78.54
Sample Time	60
Total Traverse Pts	24

K Factor

Leak Checks	Initial	Mid-Point	Final
Sample Train (ft^3)	.006		.003
Leak Check @ (in Hg)	15		9
Pitot good	yes / no	yes / no	yes / no
Orsat good	yes / no	yes / no	yes / no

Temp Check	Pre-Test Set	Post-Test Set
Meter Box Temp		
Reference Temp		
Pass/Fail (+/- 2°)	Pass / Fail	Pass / Fail
Temp Change Response ?	yes / no	yes / no

TRAVERSE POINT NO.	SAMPLE TIME (min)	CLOCK TIME (plant time)	VELOCITY PRESSURE Delta P (in H2O)	ORIFICE PRESSURE Delta H (in H2O)	DRY GAS METER READING (ft³)	STACK TEMP (°F)	DGM INLET TEMP (°F)	DGM OUTLET TEMP (°F)	PROBE TEMP (°F)	FILTER BOX TEMP (°F)	IMPINGER EXIT TEMP (°F)	SAMPLE TRAIN VAC (in Hg)		COMMENTS
	0	1215			795.900									
1	2.5		.61	~~.410~~ 1.16	797.5	410	95	91	261	265	63	5		
2	5		.60	1.14	799.1	409	93	91	268	264	59	5		
3	7.5		.63	1.20	800.7	409	93	91	269	265	53	5		
4	10		.65	1.24	802.3	410	93	91	260	264	50	5		
5	12.5		.75	1.43	803.9	411	94	91	270	266	49	5		
6	15		.77	1.46	805.6	412	95	91	260	265	48	6		
7	17.5		.82	1.56	807.3	413	95	91	263	266	48	6		
8	20		.83	1.57	809.1	415	95	91	269	265	48	7		
9	22.5		.80	1.52	810.8	415	96	91	268	266	48	7		
10	25		.84	1.59	812.6	416	96	91	270	265	48	7		
11	27.5		.76	1.44	814.3	416	96	91	259	264	48	7		
12	30	1248	.77	1.46	816.012	415	97	92	257	264	48	7		
1	32.5	1251	.72	1.38	817.7	410	98	92	263	265	53	7		
2	35		.78	1.48	819.5	412	96	92	266	265	50	7		
3	37.5		.90	1.71	821.2	414	96	92	263	265	49	7		
4	40		.85	1.61	823.0	415	97	92	265	265	48	8		
5	42.5		.90	1.71	824.9	416	96	92	270	266	48	8		1302
6	45		.90	1.71	826.7	416	96	93	255	264	52	8		1329
7	47.5		.85	1.61	828.5	417	95	93	261	264	49	8		
8	50		.65	1.23	830.1	417	94	94	260	265	49	8		
9	52.5		.68	1.29	831.7	417	94	94	254	264	48	6		
10	55		.67	1.17	833.3	418	96	94	252	264	48	6		
11	57.5		.60	1.14	834.9	417	97	94	261	266	49	6		
12	60	1347	.51	.97	836.222	418	98	94	261	265	50	6		
			Avg Sqrt Delta P .859	Avg Delta H 1.408	Total Volume 40.322	Avg Ts 414.1	Avg Tm 93.8		Min/Max 252/270	Min/Max 264/266	Max Temp 63	Max Vac 8	Max Temp	

Avg Sqrt Del H 1.183

Comments: BDS 15.0%
Iso 94.3%

WESTON MANAGERS DESIGNERS/CONSULTANTS

.741

63.4 FPS
298583 ACFM
150274 SCFM

63

ISOKINETIC FIELD DATA SHEET

Page 1 of 1

			Stack Conditions								
Client	Bowater		Assumed	Actual	Meter Box ID	AO 12			K Factor		
W.O.#	03917.008.015				Meter Box Y	0.977					
Project ID	NA	% Moisture	14		Meter Box Del H	1.883		Leak Checks	Initial	Mid-Point	Final
Mode/Source ID	NA	Impinger Vol (ml)		130	Probe ID / Length	12-C / 12'		Sample Train (ft³)	.008		.004
Samp. Loc. ID	stack	Silica gel (g)		9.3	Probe Material	Stainless Steel		Leak Check @ (in Hg)	16		10
Run No.ID	THREE	CO2, % by Vol	10		Pitot / Thermocouple ID	P-12		Pitot good	(yes) / no	yes / no	(yes) / no
Test Method ID	M5	O2, % by Vol	10		Pitot Coefficient	0.84		Orsat good	(yes) / no	yes / no	(yes) / no
Filter No.	DA-1484	Temperature (°F)	415		Nozzle ID	.250		Temp Check	Pre-Test Set		Post-Test Set
Source/Location	No. 1 Comb. Boiler	Meter Temp (°F)			Avg Nozzle Dia (in)	.250		Meter Box Temp			
Sample Date	1-Apr-10	Static Press (in H_2O)	-.82	-.82	Area of Stack (ft²)	78.54		Reference Temp			
Baro. Press (in Hg)	29.41				Sample Time	60		Pass/Fail (+/- 2°)	Pass / Fail		Pass / Fail
Operator	LW/RG	Ambient Temp (°F)			Total Traverse Pts	24		Temp Change Response ?	yes / no		yes / no

TRAVERSE POINT NO.	SAMPLE TIME (min)	CLOCK TIME (plant time)	VELOCITY PRESSURE Delta P (in H2O)	ORIFICE PRESSURE Delta H (in H2O)	DRY GAS METER READING (ft³)	STACK TEMP (°F)	DGM INLET TEMP (°F)	DGM OUTLET TEMP (°F)	PROBE TEMP (°F)	FILTER BOX TEMP (°F)	IMPINGER EXIT TEMP (°F)	SAMPLE TRAIN VAC (in Hg)		COMMENTS
	0	1506			838.002									
1	2.5		.70	1.38	839.7	419	93	94	249	266	60	6		
2	5		.68	1.34	841.4	417	94	93	251	265	55	6		
3	7.5		.90	1.78	843.2	417	95	93	251	266	51	6		
4	10		.90	1.78	845.0	419	96	94	258	266	50	6		
5	12.5		.85	1.68	846.9	419	97	94	254	265	50	6		
6	15		.87	1.72	848.7	420	98	94	258	266	51	6		
7	17.5		.76	1.50	850.5	420	98	94	259	265	51	7		
8	20		.70	1.38	852.3	420	99	94	259	266	51	7		
9	22.5		.53	1.05	857.7	419	100	95	257	266	52	7		
10	25		.50	.99	855.2	418	101	95	254	266	52	7		
11	27.5		.48	.95	856.5	418	102	95	252	262	53	7		
12	30	1536	.45	.90	857.866	417	103	95	258	261	54	7		
1	32.5	1539	.56	1.12	859.3	416	107	96	248	263	59	5		
2	35		.60	1.20	860.8	415	103	97	251	262	56	5		
3	37.5		.63	1.26	862.4	416	102	97	257	262	55	5		
4	40		.68	1.36	864.0	416	103	97	261	263	55	6		
5	42.5		.80	1.59	865.7	418	107	97	262	262	55	6		
6	45		.80	1.60	867.6	419	104	98	257	261	54	7		
7	47.5		.85	1.70	869.4	419	104	98	260	262	54	7		
8	50		.82	1.64	871.2	418	104	98	261	263	55	8		
9	52.5		.82	1.63	873.0	421	105	98	261	262	55	8		
10	55		.83	1.65	874.8	420	104	99	253	260	55	8		
11	57.5		.74	1.47	876.6	420	104	98	253	259	56	8		
12	60	1609	.73	1.45	878.402	420	103	99	249	262	55	7		
			Avg Sqrt Delta P	Avg Delta H	Total Volume	Avg Ts	Avg Tm		Min/Max	Min/Max	Max Temp	Max Vac	Max Temp	
			.842	1.422	40.402	418.4	98.4		249/262	259/266	60	8		
				Avg Sqrt Del H	Comments:									
				1.187										

WESTON MANAGERS DESIGNERS/CONSULTANTS

.716

BWS 15.2%

Iso 95.8%

62.3 fps

293670 ACFM

146813 SCFM

63

35

SAMPLE RECOVERY FIELD DATA

Client	Bowater	W.O. #	03917.008.015
Location/Plant	Catawba, SC	Source & Location	No. 1 Comb. Boiler

Run No. ONE Sample Date 1APR10 Recovery Date 1APR10

Sample I.D. DA-1482 Analyst RRD Filter Number DA-1482

	Impinger									
	1	2	3	4	5	6	7	Imp.Total	8	Total
Contents	Di H20	Di H20	Empty	Silica Gel						
Final	314	110	0	357.0						
Initial	100	100	0	344.3						
Gain	214 ✓	10 ✓	0	12.7				224		236.7 ✓

Impinger Color ✓ 23.8% Labeled? Y

Silica Gel Condition ✓ Sealed? Y

Run No. TWO Sample Date 1APR10 Recovery Date 1APR10

Sample I.D. DA-1483 Analyst RRD Filter Number DA 1483

	Impinger									
	1	2	3	4	5	6	7	Imp.Total	8	Total
Contents	Di H20	Di H20	Empty	Silica Gel						
Final	224	106	0	354.7						
Initial	100	100	0	346.1						
Gain	124 ✓	6 ✓	0	8.6				130		138.6 ✓

Impinger Color ✓ Labeled? Y

Silica Gel Condition ✓ Sealed? Y

Run No. THREE Sample Date _____ Recovery Date _____

Sample I.D. _____ Analyst _____ Filter Number _____

	Impinger									
	1	2	3	4	5	6	7	Imp.Total	8	Total
Contents	Di H20	Di H20	Empty	Silica Gel						
Final	220	110	0	353.2						
Initial	100	100	0	343.9						
Gain	120 ✓	10 ✓	0	9.3 ✓				130		139.3 ✓

Impinger Color ✓ Labeled? Y

Silica Gel Condition ✓ Sealed? Y

Check COC for Sample IDs of Media Blanks

WESTON MANAGERS DESIGNERS/CONSULTANTS

✓NV

Sample and Velocity Traverse Point Data Sheet - Method 1

Client	Bowater	Operator	TS/ LW
Loaction/Plant	Catawba, SC	Date	1-Apr-10
Source	No. 1 Combination Boiler	W.0. Number	03917.008.015

Duct Type	☑ Circular	☐ Rectangular Duct	Indicate appropriate type
Traverse Type	☑ Particulate Traverse	☐ Velocity Traverse	

Distance from far wall to outside of port (in.) = C	127.50
Port Depth (in.) = D	7.50
Depth of Duct, diameter (in.) = C-D	120
Area of Duct (ft^2)	78.540
Total Traverse Points	24
Total Traverse Points per Port	12

Rectangular Ducts Only	
Width of Duct, rectangular duct only (in.)	
Total Ports (rectangular duct only)	

Flow Disturbances	
Upstream - A (ft)	45.00
Downstream - B (ft)	32.00
Upstream - A (duct diameters)	4.50
Downstream - B (duct diameters)	3.20

Diagram of Stack

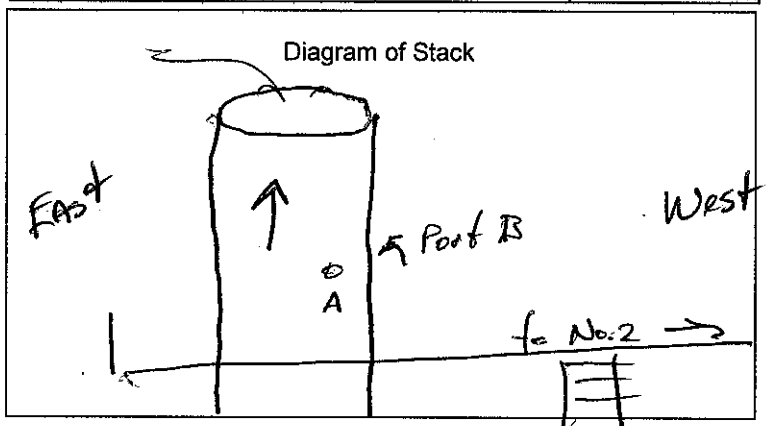

Traverse Point Locations

Traverse Point	% of Duct	Distance from Inside Duct Wall (in)	Distance from Outside of Port (in)
1	2.1	2.5	10.0
2	6.7	8.0	15.5
3	11.8	14.2	21.7
4	17.7	21.2	28.7
5	25.0	30.0	37.5
6	35.6	42.7	50.2
7	64.4	77.3	84.8
8	75.0	90.0	97.5
9	82.3	98.8	106.3
10	88.2	105.8	113.3
11	93.3	112.0	119.5
12	97.9	117.5	125.0

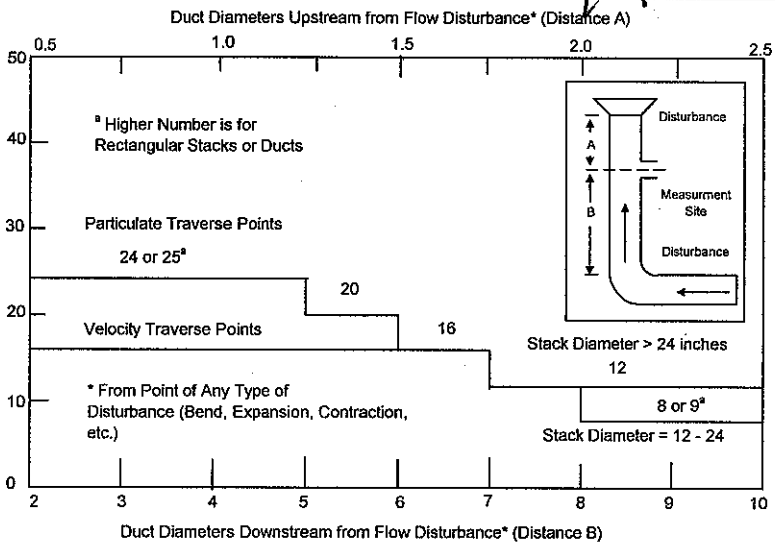

Equivalent Diameter = (2*L*W)/(L+W)

Traverse Point Location Percent of Stack -Circular

Traverse Point Location	Number of Traverse Points: 1	2	3	4	5	6	7	8	9	10	11	12
1		14.6		6.7		4.4		3.2		2.6		2.1
2		85.4		25		14.6		10.5		8.2		6.7
3				75		29.6		19.4		14.6		11.8
4				93.3		70.4		32.3		22.6		17.7
5						85.4		67.7		34.2		25
6						95.6		80.6		65.8		35.6
7								89.5		77.4		64.4
8								96.8		85.4		75
9										91.8		82.3
10										97.4		88.2
11												93.3
12												97.9

Traverse Point Location Percent of Stack -Rectangular

Traverse Point Location	Number of Traverse Points: 1	2	3	4	5	6	7	8	9	10	11	12
1		25.0	16.7	12.5	10.0	8.3	7.1	6.3	5.6	5.0	4.5	4.2
2		75.0	50.0	37.5	30.0	25.0	21.4	18.8	16.7	15.0	13.6	12.5
3			83.3	62.5	50.0	41.7	35.7	31.3	27.8	25.0	22.7	20.8
4				87.5	70.0	58.3	50.0	43.8	38.9	35.0	31.8	29.2
5					90.0	75.0	64.3	56.3	50.0	45.0	40.9	37.5
6						91.7	78.6	68.8	61.1	55.0	50.0	45.8
7							92.9	81.3	72.2	65.0	59.1	54.2
8								93.8	83.3	75.0	68.2	62.5
9									94.4	85.0	77.3	70.8
10										95.0	86.4	79.2
11											95.5	87.5
12												95.8

Rectangular Stack Points & Matrix
9 - 3 x 3
12 - 4 x 3
16 - 4 x 4
20 - 5 x 4
25 - 5 x 5
30 - 6 x 5
36 - 6 x 6
42 - 7 x 6
49 - 7 x 7

WESTON MANAGERS DESIGNERS/CONSULTANTS

Copyright Roy F Weston Inc Oct 1998PV

Determination of Stack Gas Velocity - Method 2 03917.008.015

Client	BOWATER	Operator	ABD/LW	Pitot Coeff (Cp)	1.84
Location/Plant	CATAWBA, SC	Date	6APR10	Stack Area, ft² (As)	
Source	#1 COMB BLR	W.O. Number	03917.	Pitot Tube/Thermo ID	12C-P12

Run Number			
Time			
Barometric Press, in Hg (Pb)			
Static Press, in H_20 (Pstatic)			
Source Moisture, % (BWS)			
O_2, %			
CO_2, %			

Cyclonic Flow Determination		Traverse Location		Leak Check good ? Y / N		Leak Check good ? Y / N		Leak Check good ? Y / N	
Delta P at 0°	Angle yeilding zero Delta P	Port	Point	Delta P	Source Temp, F° (Ts)	Delta P	Source Temp, F° (Ts)	Delta P	Source Temp, F° (Ts)
0	5	A	1						
0	5		2						
0	3		3						
0	3		4						
0	3		5						
0	0		6						
0	0		7						
0	0		8						
0	0		9						
0	5		10						
0	5		11						
0	5		12						
0	5	B	1						
0	5		2						
0	5		3						
0	4		4						
0	0		5						
0	0		6						
0	0		7						
0	5		8						
0	7		9						
0	7		10						
0	10		11						
0	10		12						
Avg Angle		Avg Delta P & Temp							
			Qs						
Average gas stream velocity, ft/sec.									
Vol. flow rate @ actual conditions, wacf/min									
Vol. flow rate at standard conditions, dscf/min									

$$MWd = (0.32 * O_2) + (0.44 * CO_2) + (0.28 * (100 - (CO_2 + O_2)))$$

$$MWs = (MWd * (1 - (BWS/100))) + (18 * (BWS/100))$$

$$Tsa = Ts + 460$$

$$Ps = Pb + (Pstatic/13.6)$$

$$Vs = 85.49 * Cp * avg\sqrt{DeltaP} * \sqrt{Tsa/(Ps * MWs)}$$

$$Qs(act) = 60 * Vs * As$$

$$Qs(std) = 17.64 * (1 - (BWS/100)) * (Ps/Tsa) * Qs(act)$$

where:
MWd = Dry molecular weight source gas, lb/lb-mole.
MWs = Wet molecular weight source gas, lb/lb-mole.
Tsa = Source Temperature, absolute(oR)
Ps = Absolute stack static pressure, inches Hg.
Vs = Average gas stream velocity, ft/sec.
Qs(act) = Volumetric flow rate of wet stack gas at actual, wacf/min
Qs(std) = Volumetric flow rate of dry stack gas at standard conditions, dscf/min

Comments _____

Meth2.xls

Copyright Roy F Weston Inc October 1998

RUN DATA

Number 1

Client: **Bowater**
Location: **Catawba, SC**
Source: **No. 1 Combination Boiler**

Calibration **1**

Project Number: **03917.008.015**
Operator: **T. Simpkins**
Date: **1 Apr 2010**

Time	O_2 mv	O_2 %	CO_2 mv	CO_2 %
12:00	377	9.5	126	9.8
12:01	377	9.5	127	9.9
12:02	377	9.5	126	9.8
Avgs	**377**	**9.5**	**126**	**9.8**

RUN DATA

Number 2

Client: **Bowater**
Location: **Catawba, SC**
Source: **No. 1 Combination Boiler**

Calibration **1**

Project Number: **03917.008.015**
Operator: **T. Simpkins**
Date: **1 Apr 2010**

Time	O_2 mv	O_2 %	CO_2 mv	CO_2 %
14:54	392	9.9	123	9.5
14:55	392	9.9	123	9.5
14:56	392	9.9	124	9.6
Avgs	**392**	**9.9**	**123**	**9.5**

RUN DATA

Number 3

Client: **Bowater**
Location: **Catawba, SC**
Source: **No. 1 Combination Boiler**

Calibration **1**

Project Number: **03917.008.015**
Operator: **T. Simpkins**
Date: **1 Apr 2010**

Time	O_2 mv	O_2 %	CO_2 mv	CO_2 %
16:14	414	10.5	119	9.1
16:15	414	10.5	120	9.2
16:16	414	10.5	120	9.2
Avgs	**414**	**10.5**	**120**	**9.2**

CALIBRATION DATA

Number 1

Client: **Bowater**
Location: **Catawba, SC**
Source: **No. 1 Combination Boiler**

Project Number: **03917.008.015**
Operator: **T. Simpkins**
Date: **1 Apr 2010**

Start Time: 11:39

O_2

Method: EPA 3A

Calibration Type: Linear Regression

Calibration Results

%	Cylinder ID	Result, mv
Zero	-	13
10.2	CC42605	401
20.2	XC025060B	786

Curve Coefficients

Slope	Intercept	Corr. Coeff.
38.27	12	>0.9999

CO_2

Method: EPA 3A

Calibration Type: Linear Regression

Calibration Results

%	Cylinder ID	Result, mv
Zero	-	21
10.2	CC42605	130
20.1	XC025060B	236

Curve Coefficients

Slope	Intercept	Corr. Coeff.
10.72	21	>0.9999

CALIBRATION ERROR DATA

Number 1

Client: **Bowater**
Location: **Catawba, SC**
Source: **No. 1 Combination Boiler**

Calibration **1**

Project Number: **03917.008.015**
Operator: **T. Simpkins**
Date: **1 Apr 2010**

Start Time: 11:39

O_2
Method: EPA 3A
Span Conc. 20.2 %
Slope 38.27 **Intercept** 12.2

Standard %	Response mv	Result %	Difference %	Error %	Status
Zero	13	0.0	0.0	0.0	Pass ✓
10.2	401	10.2	0.0	0.0	Pass ✓
20.2	786	20.2	0.0	0.0	Pass ✓

CO_2
Method: EPA 3A
Span Conc. 20.1 %
Slope 10.72 **Intercept** 20.9

Standard %	Response mv	Result %	Difference %	Error %	Status
Zero	21	0.0	0.0	0.0	Pass ✓
10.2	130	10.2	0.0	0.0	Pass ✓
20.0	236	20.1	0.1	0.5	Pass ✓

APPENDIX D
FIELD DATA –
NO. 2 COMBINATION BOILER

Bowater
Catawba, SC

03917.008.015
No. 2 Combination Boiler

ISOKINETIC CALCULATIONS

Run Number		1	2	3	Mean
Date		4/6/2010	4/6/2010	4/6/2010	---
Time Began		1124	1341	1527	---
Time Ended		1230	1445	1630	---
	INPUT DATA				
Sampling Time, min	(Theta)	60.0	60	60	60
Stack Diameter, in.	(Dia.)	120.00	120.00	120.00	120.00
Barometric Pressure, in. Hg	(Pb)	29.55	29.55	29.55	29.55
Static Pressure, in. H2O	(Pg)	-1.05	-1.05	-1.05	-1.05
Pitot Tube Coefficient	(Cp)	0.84	0.84	0.84	0.84
Meter Correction Factor	(Y)	0.9770	0.9770	0.9770	0.9770
Orifice Calibration Value	(Delta H@)	1.8830	1.8830	1.8830	1.8830
Nozzle Diameter, in.	(Dn)	0.225	0.225	0.225	0.225
Meter Volume, ft^3	(Vm)	45.876	44.152	45.236	45.088
Meter Temperature, °F	(Tm)	92.0	95.7	99.6	95.8
Meter Temperature, °R	(Tm-R)	552.0	555.7	559.6	555.8
Meter Orifice Pressure, in. H2O	(Delta H)	1.827	1.685	1.757	1.756
Ave Sq Rt Orifice Press, (in. H2O)^½	((Delta H)½)avg)	1.349	1.296	1.327	1.324
Volume H2O Collected, mL	(Vlc)	129.6	122.5	117.1	123.1
CO2 Concentration, %	(CO2)	7.3	8.1	8.8	8.1
O2 Concentration, %	(O2)	12.5	11.7	11.1	11.8
Ave Sq Rt Velo Head, (in. H2O)^½	((Delta P)½)avg)	1.092	1.048	1.067	1.069
Stack Temperature, °F	(Ts)	388.7	392.6	394.0	391.8
Stack Temperature, °R	(Ts-R)	848.7	852.6	854.0	851.8
Particulate Collected, g	(Mn)	0.2756	0.1571	0.1218	0.1848
O2 F Factor, dscf/MMBtu	(Fd)	9368	9460	9368	9399
	CALCULATED DATA				
Nozzle Area, in^2	(An)	3.98E-02	3.98E-02	3.98E-02	3.98E-02
Stack Area, ft^2	(As)	78.54	78.54	78.54	78.54
Stack Pressure, in. Hg	(Ps)	29.47	29.47	29.47	29.47
Meter Pressure, in. Hg	(Pm)	29.68	29.67	29.68	29.68
Standard Meter Volume, ft^3	(Vmstd)	42.517	40.633	41.348	41.499
Standard Water Volume, ft^3	(Vwstd)	6.100	5.766	5.512	5.793
Moisture Fraction (Measured)	(BWS)	0.125	0.124	0.118	0.122
Moisture Fraction (lower sat/meas)	(BWS)	0.125	0.124	0.118	0.122
Mol. Wt. of Dry Gas, lb/lb-mole	(Md)	29.67	29.76	29.85	29.76
Mol. Wt. of Stack Gas, lb/lb-mole	(Ms)	28.20	28.30	28.46	28.32
Average Stack Gas Velocity, ft/sec	(Vs)	79.24	76.09	77.32	77.55
Stack Gas Flow, actual, ft^3/min	(Qa)	373396	358550	364349	365432
Stack Gas Flow, Std , ft^3/min	(Qs)	200036	191467	195718	195740
Isokinetic Sampling Rate, %	(%I)	100.8	100.6	100.2	100.5
Particulate Conc @ Std Cond, gr/ft^3	(Cs)	0.100	0.060	0.045	0.068
Particulate Emission, lb/hr	(PMR)	171.462	97.890	76.238	115.20
Particulate Emission Factor, lb/MMBtu	(Fd)	0.3330	0.1832	0.1297	0.2153
Calibration check	(Yqa)	0.9791	0.9792	0.9805	0.980
Percent difference from Y					0.26%

VNV
JS JB

ISOKINETIC FIELD DATA SHEET

EPA Method 5 - Particulate (Pulp & Paper)

Client	Bowater
W.O.#	03917.008.015
Project ID	NA
Mode/Source ID	
Samp. Loc. ID	Catawba, SC
Run No.ID	OPE
Test Method ID	M5
Date ID	NA
Source/Location	No. 2 Comb. Boiler
Sample Date	6-Apr-10
Baro. Press (in Hg)	29.55
Operator	RG/ LW

Stack Conditions

	Assumed	Actual
% Moisture	12	
Impinger Vol (ml)		120
Silica gel (g)		9.6
CO2, % by Vol	8.0	7.3
O2, % by Vol	11.5	12.5
Temperature (°F)	380	
Meter Temp (°F)		
Static Press (in H_2O)	-.75	-1.05
Ambient Temp (°F)		

Meter Box ID	AO 12	
Meter Box Y	0.977	
Meter Box Del H	1.883	
Probe ID / Length	12C	12
Probe Material	ss	
Pitot / Thermocouple ID	P12	
Pitot Coefficient	0.84	
Nozzle ID	.225	
Avg Nozzle Dia (in)	.225	
Area of Stack (ft²)	78.54	
Sample Time	60	
Total Traverse Pts	24	

K Factor

Leak Checks	Initial	Mid-Point	Final
Sample Train (ft³)	.013		
Leak Check @ (in Hg)	15		
Pitot good	yes / no	yes / no	yes / no
Orsat good	yes / no	yes / no	yes / no

Temp Check	Pre-Test Set	Post-Test Set
Meter Box Temp		
Reference Temp		
Pass/Fail (+/- 2°)	Pass / Fail	Pass / Fail
Temp Change Response ?	yes / no	yes / no

TRAVERSE POINT NO.	SAMPLE TIME (min)	CLOCK TIME (plant time)	VELOCITY PRESSURE Delta P (in H2O)	ORIFICE PRESSURE Delta H (in H2O)	DRY GAS METER READING (ft³)	STACK TEMP (°F)	DGM INLET TEMP (°F)	DGM OUTLET TEMP (°F)	PROBE TEMP (°F)	FILTER BOX TEMP (F)	IMPINGER EXIT TEMP (F)	SAMPLE TRAIN VAC (in Hg)		COMMENTS
	0	1124			923.000									
A 1	2.5		1.20	1.83	924.8	388	90	91	250	261	57	7		
2	5		1.20	1.83	926.7	389	89	91	260	263	52	7		
3	7.5		1.20	1.83	928.6	388	89	91	256	262	50	7		
4	10		1.25	1.90	930.6	389	90	91	259	261	50	7		
5	12.5		1.20	1.82	932.5	390	90	91	250	263	50	7		
6	15		1.30	1.98	934.4	390	90	91	254	263	51	7		
7	17.5		1.40	2.13	936.5	390	91	91	261	263	52	7		
8	20		1.30	1.98	938.5	389	91	92	260	263	53	8		
9	22.5		1.15	1.76	940.4	388	92	92	249	262	53	8		
10	25		.97	1.49	942.2	387	93	92	258	263	54	8		
11	27.5		.95	1.46	943.9	386	93	92	255	261	54	8		
12	30	1154	.85	1.30	945.740	386	94	92	256	262	54	7		
B 1	32.5	1200	1.10	1.69	947.4	385	96	92	246	262	58	7		
2	35		1.10	1.69	949.2	387	94	93	256	263	55	7		
3	37.5		1.10	1.68	951.0	387	93	92	258	263	54	7		
4	40		1.20	1.84	953.0	388	93	92	249	263	54	7		
5	42.5		1.40	2.14	954.9	389	93	92	253	263	54	8		
6	45		1.40	2.14	957.0	390	93	92	252	263	54	8		
7	47.5		1.35	2.06	959.0	390	93	92	257	259	55	8		
8	50		1.30	1.98	961.0	391	93	92	250	266	56	8		
9	52.5		1.30	1.98	962.0	391	93	92	248	260	57	9		
10	55		1.20	1.83	965.1	391	93	92	247	262	57	9		
11	57.5		1.20	1.83	967.0	390	93	93	255	260	58	9		
12	60	1230	1.10	1.68	968.876	390	93	93	257	260	58	9		
			Avg Sqrt Delta P 1.092	Avg Delta H 1.827	Total Volume 45.876	Avg Ts 388.7	Avg Tm 92.0		Min/Max 247/261	Min/Max 259/266	Max Temp 58	Max Vac 9	Max Temp	

WESTON MANAGERS DESIGNERS/CONSULTANTS

1.197

Avg Sqrt Del H 1.349

Comments: BWS 12.6 ISO 100.6

79.2 FPS 373245 ACFM 200078 SCFM

DA-1465

ISOKINETIC FIELD DATA SHEET

EPA Method 5 - Particulate (Pulp & Paper)

Page 1 of 1

			Stack Conditions								
Client	Bowater		Assumed	Actual	Meter Box ID	AO 12			K Factor		
W.O.#	03917.008.015				Meter Box Y	0.977					
Project ID	NA	% Moisture	12		Meter Box Del H	1.883		Leak Checks	Initial	Mid-Point	Final
Mode/Source ID		Impinger Vol (ml)		114	Probe ID / Length	12C	12'	Sample Train (ft^3)	.012		.004
Samp. Loc. ID	Catawba, SC	Silica gel (g)		8.5	Probe Material	ss		Leak Check @ (in Hg)	15		9
Run No.ID	TD3	CO2, % by Vol	8	8.1	Pitot / Thermocouple ID	P12		Pitot good	yes / no	yes / no	yes / no
Test Method ID	M5	O2, % by Vol	11.5	11.7	Pitot Coefficient	0.84		Orsat good	yes / no	yes / no	yes / no
Date ID	NA	Temperature (°F)			Nozzle ID	.225		Temp Check	Pre-Test Set		Post-Test Set
Source/Location	No. 2 Comb. Boiler	Meter Temp (°F)			Avg Nozzle Dia (in)	.225		Meter Box Temp			
Sample Date	6-Apr-10	Static Press (in H_2O)		-.75	Area of Stack (ft^2)	78.54		Reference Temp			
Baro. Press (in Hg)	29.55			-1.05	Sample Time	60		Pass/Fail (+/- 2°)	Pass / Fail		Pass / Fail
Operator	RG/ LW	Ambient Temp (°F)			Total Traverse Pts	24		Temp Change Response ?	yes / no		yes / no

TRAVERSE POINT NO.	SAMPLE TIME (min)	CLOCK TIME (plant time)	VELOCITY PRESSURE Delta P (in H2O)	ORIFICE PRESSURE Delta H (in H2O)	DRY GAS METER READING (ft^3)	STACK TEMP (°F)	DGM INLET TEMP (°F)	DGM OUTLET TEMP (°F)	PROBE TEMP (°F)	FILTER BOX TEMP (°F)	IMPINGER EXIT TEMP (°F)	SAMPLE TRAIN VAC (in Hg)		COMMENTS
	0	1341			971.802									
B 1	2.5		1.30	1.98	973.8	393	93	94	259	270	62	7		
2	5		1.20	1.83	975.7	393	93	94	255	258	54	7		
3	7.5		1.25	1.90	977.6	393	93	94	252	259	52	7		
4	10		1.20	1.83	979.6	394	93	94	257	259	51	7		
5	12.5		1.20	1.82	981.5	395	93	94	249	258	51	7		
6	15		1.15	1.75	983.4	395	93	95	251	259	52	7		
7	17.5		1.25	1.90	985.3	395	93	95	253	258	52	7		
8	20		1.10	1.68	987.2	394	93	95	257	258	52	7		
9	22.5		1.10	1.68	989.0	393	93	95	247	258	53	7		
10	25		.89	1.36	990.8	393	94	96	254	259	53	7		
11	27.5		.90	1.38	992.4	391	94	96	246	257	53	7		
12	30	1411	.81	1.24	993.984	391	95	96	254	257	53	6		
A 1	32.5	1415	.97	1.49	995.6	390	99	96	255	261	56	5		
2	35		1.00	1.54	997.3	391	97	97	256	258	53	5		
3	37.5		1.05	1.61	999.0	391	97	97	248	258	53	5		
4	40		1.05	1.61	1000.8	391	97	97	257	256	53	6		
5	42.5		1.20	1.84	1002.7	392	97	97	259	257	53	6		
6	45		1.20	1.84	1004.6	393	97	97	253	258	53	7		
7	47.5		1.10	1.69	1006.6	393	97	97	249	259	54	7		
8	50		1.10	1.69	1008.5	393	97	97	248	258	54	7		
9	52.5		1.10	1.69	1010.3	394	98	98	254	258	55	7		
10	55		1.10	1.69	1012.2	392	98	98	247	256	55	7		
11	57.5		1.10	1.69	1014.1	392	98	98	256	256	55	7		
12	60	1495	1.10	1.70	1015.954	390	98	98	253	260	55	7		
			Avg Sqrt Delta P	Avg Delta H	Total Volume	Avg Ts	Avg Tm		Min/Max	Min/Max	Max Temp	Max Vac	Max Temp	
			1.048	1.685	44.152	392.6	95.7		246/259	256/270	62	7		
				Avg Sqrt Del H	Comments:	BPS 12.6			76.1 FPS		DA-1466			
				1.296		Iso 100.3			358524 ACFM					
									191230 SCFM					

1.101

WESTON MANAGERS DESIGNERS/CONSULTANTS

ISOKINETIC FIELD DATA SHEET

EPA Method 5 - Particulate (Pulp & Paper)

Page 1 of 1

Client	Bowater
W.O.#	03917.008.015
Project ID	NA
Mode/Source ID	
Samp. Loc. ID	Catawba, SC
Run No.ID	THREE
Test Method ID	M5
Date ID	NA
Source/Location	No. 2 Comb. Boiler
Sample Date	6-Apr-10
Baro. Press (in Hg)	29.55
Operator	RG / LW

Stack Conditions

	Assumed	Actual
% Moisture	12	
Impinger Vol (ml)		
Silica gel (g)		
CO2, % by Vol	8	8.8
O2, % by Vol	11.5	11.1
Temperature (°F)		
Meter Temp (°F)		
Static Press (in H_2O)		-1.05
Ambient Temp (°F)		

Meter Box ID	AO 12	
Meter Box Y	0.977	
Meter Box Del H	1.883	
Probe ID / Length	12C	12'
Probe Material	ss	
Pitot / Thermocouple ID	P12	
Pitot Coefficient	0.84	
Nozzle ID	.225	
Avg Nozzle Dia (in)	.225	
Area of Stack (ft^2)	78.54	
Sample Time	60	
Total Traverse Pts	24	

K Factor

Leak Checks	Initial	Mid-Point	Final
Sample Train (ft^3)	.016		
Leak Check @ (in Hg)	12		
Pitot good	yes / no	yes / no	yes / no
Orsat good	yes / no	yes / no	yes / no

Temp Check	Pre-Test Set	Post-Test Set
Meter Box Temp		
Reference Temp		
Pass/Fail (+/- 2°)	Pass / Fail	Pass / Fail
Temp Change Response ?	yes / no	yes / no

TRAVERSE POINT NO.	SAMPLE TIME (min)	CLOCK TIME (plant time)	VELOCITY PRESSURE Delta P (in H2O)	ORIFICE PRESSURE Delta H (in H2O)	DRY GAS METER READING (ft³)	STACK TEMP (°F)	DGM INLET TEMP (°F)	DGM OUTLET TEMP (°F)	PROBE TEMP (°F)	FILTER BOX TEMP (F)	IMPINGER EXIT TEMP (°F)	SAMPLE TRAIN VAC (in Hg)		COMMENTS
	0	1527			17.600									
1	2.5		1.25	1.92	19.5	393	98	97	254	258	57	6		
2	5		1.25	1.92	21.5	392	98	97	248	258	53	6		
3	7.5		1.25	1.91	23.4	394	98	97	256	257	51	6		
4	10		1.25	1.92	25.3	394	99	97	255	257	51	6		
5	12.5		1.25	1.92	27.3	395	100	97	255	258	51	6		
6	15		1.30	1.99	29.3	395	100	97	254	258	52	7		
7	17.5		1.30	1.99	31.3	395	100	97	260	258	54	7		
8	20		1.30	1.99	33.3	394	100	97	258	258	55	7		
9	22.5		1.10	1.69	35.2	393	100	97	248	258	55	7		
10	25		1.10	1.69	37.1	392	100	98	256	258	55	7		
11	27.5		1.05	1.62	38.9	392	101	98	250	256	56	6		
12	30	1557	.97	1.49	40.733	392	101	98	246	256	56	6		
B 1	32.5	1600	1.00	1.55	42.6	390	105	98	256	258	59	6		
2	35		1.00	1.54	44.3	393	102	99	250	258	58	6		
3	37.5		1.10	1.70	46.1	393	102	99	250	258	57	6		
4	40		1.10	1.70	47.9	394	103	99	258	259	57	6		
5	42.5		1.30	2.00	49.9	394	103	99	259	259	57	7		
6	45		1.30	2.00	51.9	395	102	99	260	258	58	7		
7	47.5		1.20	1.84	53.9	396	101	99	255	260	58	7		
8	50		1.20	1.84	55.8	397	102	100	252	258	59	7		
9	52.5		1.10	1.69	57.7	397	102	100	251	259	59	7		
10	55		1.10	1.69	59.5	396	102	100	256	259	59	7		
11	57.5		.82	1.26	61.2	396	102	100	258	259	59	7		
12	60	1630	.84	1.30	62.836	393	103	100	255	258	60	7		
			Avg Sqrt Delta P 1.0671	Avg Delta H 1.7571	Total Volume 45.236	Avg Ts 394.0	Avg Tm 99.6		Min/Max	Min/Max	Max Temp	Max Vac	Max Temp	

WESTON MANAGERS DESIGNERS/CONSULTANTS

1.143

Avg Sqrt Del H 1.323

Comments: BWS 11.5
IS 99.5

77.4 FPS
364770 ACFM
196487 SCFM

DA-1467

SB

SAMPLE RECOVERY FIELD DATA

EPA Method 5 - Particulate (Pulp & Paper)

Client	Bowater	W.O. #	03917.008.015
Location/Plant	Catawba, SC	Source & Location	No. 2 Comb/ Boiler

Run No. ONE **Sample Date** 6APR10 **Recovery Date** 6APR10

Sample I.D. DA-1465 **Analyst** RLD **Filter Number** DA-1465

	Impinger									
	1	2	3	4	5	6	7	Imp.Total	8	Total
Contents	Di H20	Di H20	Empty						Silica Gel	
Final	216	104	0						354.2	
Initial	100	100	0						344.8	
Gain	116	4	0					120	9.6	129.6

Impinger Color ✓ Labeled? Y

Silica Gel Condition ✓ Sealed? Y

Run No. TWO **Sample Date** 6APR10 **Recovery Date**

Sample I.D. DA-~~12~~ 1466 **Analyst** RLD **Filter Number** DA-1466

	Impinger									
	1	2	3	4	5	6	7	Imp.Total	8	Total
Contents	Di H20	Di H20	Empty						Silica Gel	
Final	206	108	0						323.7	
Initial	100	100	0						314.8	
Gain	106	8	0					114	8.5	

Impinger Color ✓ Labeled? Y

Silica Gel Condition ✓ Sealed? Y

Run No. THREE **Sample Date** 6APR10 **Recovery Date** 6APR10

Sample I.D. DA-1467 **Analyst** RLD **Filter Number** DA-1467

	Impinger									
	1	2	3	4	5	6	7	Imp.Total	8	Total
Contents	Di H20	Di H20	Empty						Silica Gel	
Final	200	106	0						318.1	
Initial	100	100	0						307.0	
Gain	100	6	0					106	11.1	117.1

Impinger Color ✓ Labeled? Y

Silica Gel Condition ✓ Sealed? Y

Check COC for Sample IDs of Media Blanks

WESTON MANAGERS DESIGNERS/CONSULTANTS

Sample and Velocity Traverse Point Data Sheet - Method 1

Client	Bowater	Operator	TS/ LW
Loaction/Plant	Catawba, SC	Date	1-Apr-10
Source	No. 2 Combination Boiler	W.O. Number	03917.008.015

Duct Type	☑ Circular	☐ Rectangular Duct	Indicate appropriate type
Traverse Type	☑ Particulate Traverse	☐ Velocity Traverse	

Distance from far wall to outside of port (in.) = C	127.50
Port Depth (in.) = D	7.50
Depth of Duct, diameter (in.) = C-D	120
Area of Duct (ft^2)	78.540
Total Traverse Points	24
Total Traverse Points per Port	12

Rectangular Ducts Only	
Width of Duct, rectangular duct only (in.)	
Total Ports (rectangular duct only)	

Flow Disturbances	
Upstream - A (ft)	45.00
Downstream - B (ft)	32.00
Upstream - A (duct diameters)	4.50
Downstream - B (duct diameters)	3.20

Diagram of Stack

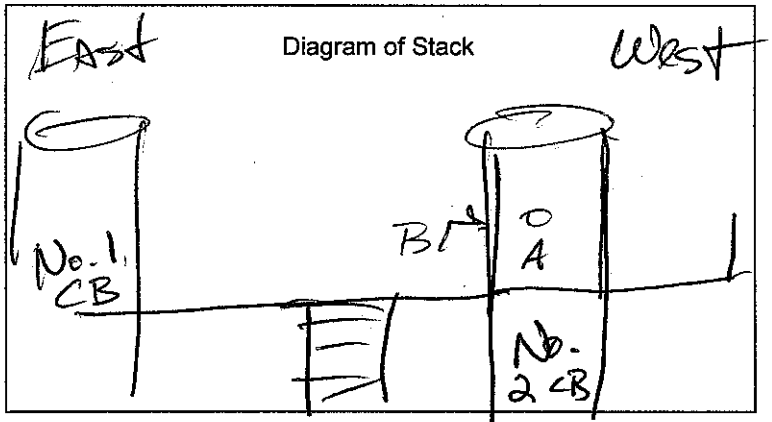

Traverse Point Locations

Traverse Point	% of Duct	Distance from Inside Duct Wall (in)	Distance from Outside of Port (in)
1	2.1	2.5	10.0
2	6.7	8.0	15.5
3	11.8	14.2	21.7
4	17.7	21.2	28.7
5	25.0	30.0	37.5
6	35.6	42.7	50.2
7	64.4	77.3	84.8
8	75.0	90.0	97.5
9	82.3	98.8	106.3
10	88.2	105.8	113.3
11	93.3	112.0	119.5
12	97.9	117.5	125.0

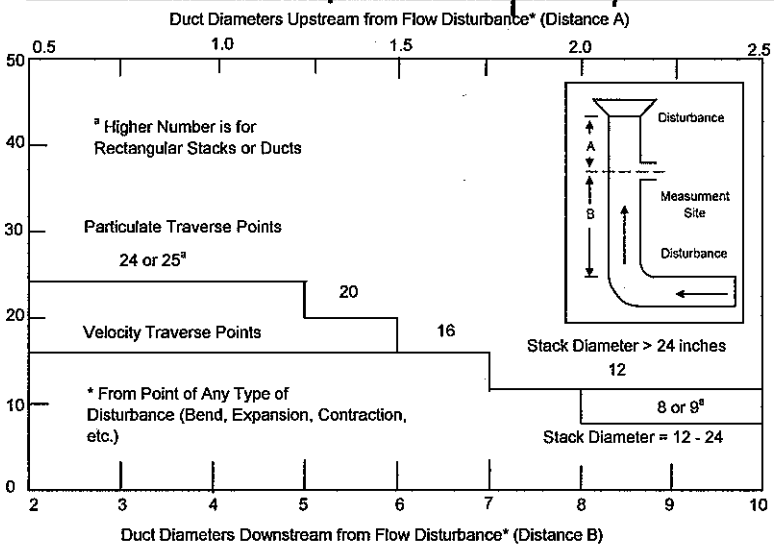

Equivalent Diameter = (2*L*W)/(L+W)

Traverse Point Location Percent of Stack -Circular

Traverse Point Location	Number of Traverse Points: 1	2	3	4	5	6	7	8	9	10	11	12
1		14.6		6.7		4.4		3.2		2.6		2.1
2		85.4		25		14.6		10.5		8.2		6.7
3				75		29.6		19.4		14.6		11.8
4				93.3		70.4		32.3		22.6		17.7
5						85.4		67.7		34.2		25
6						95.6		80.6		65.8		35.6
7								89.5		77.4		64.4
8								96.8		85.4		75
9										91.8		82.3
10										97.4		88.2
11												93.3
12												97.9

Traverse Point Location Percent of Stack -Rectangular

Traverse Point Location	Number of Traverse Points: 1	2	3	4	5	6	7	8	9	10	11	12
1		25.0	16.7	12.5	10.0	8.3	7.1	6.3	5.6	5.0	4.5	4.2
2		75.0	50.0	37.5	30.0	25.0	21.4	18.8	16.7	15.0	13.6	12.5
3			83.3	62.5	50.0	41.7	35.7	31.3	27.8	25.0	22.7	20.8
4				87.5	70.0	58.3	50.0	43.8	38.9	35.0	31.8	29.2
5					90.0	75.0	64.3	56.3	50.0	45.0	40.9	37.5
6						91.7	78.6	68.8	61.1	55.0	50.0	45.8
7							92.9	81.3	72.2	65.0	59.1	54.2
8								93.8	83.3	75.0	68.2	62.5
9									94.4	85.0	77.3	70.8
10										95.0	86.4	79.2
11											95.5	87.5
12												95.8

Rectangular Stack Points & Matrix
9 - 3 x 3
12 - 4 x 3
16 - 4 x 4
20 - 5 x 4
25 - 5 x 5
30 - 6 x 5
36 - 6 x 6
42 - 7 x 6
49 - 7 x 7

WESTON MANAGERS DESIGNERS/CONSULTANTS

Copyright Roy F Weston Inc Oct 1998PV

Determination of Stack Gas Velocity - Method 2

Client: BOWATER
Location/Plant: CATAWBA, SC
Source: #2 COMB BLR
Operator: RLD/LW
Date: 6APR10
W.O. Number: 03881.008.015
Pitot Coeff (Cp): .84
Stack Area, ft² (As): 12.6
Pitot Tube/Thermo ID: 12-C P-12

Run Number			
Time			
Barometric Press, in Hg (Pb)			
Static Press, in H_2O (Pstatic)			
Source Moisture, % (BWS)			
O_2, %			
CO_2, %			

Cyclonic Flow Determination		Traverse Location		Leak Check good ? Y / N		Leak Check good ? Y / N		Leak Check good ? Y / N	
Delta P at 0°	Angle yeilding zero Delta P	Port	Point	Delta P	Source Temp, F° (Ts)	Delta P	Source Temp, F° (Ts)	Delta P	Source Temp, F° (Ts)
~~0.75~~	10	A	1						
~~0.75~~	5		2						
0	5		3						
0	5		4						
0	5		5						
0	5		6						
0	0		7						
0	0		8						
0	0		9						
0	0		10						
0	5		11						
0	5		12						
0	10	B	1						
0	5		2						
0	5		3						
0	5		4						
0	0		5						
0	0		6						
0	0		7						
0	0		8						
0	0		9						
0	0		10						
0	5		11						
0	5		12						
0									
Avg Angle		Avg Delta P & Temp							
		avg √DeltaP							
Average gas stream velocity, ft/sec.									
Vol. flow rate @ actual conditions, wacf/min									
Vol. flow rate at standard conditions, dscf/min									

$$MWd = (0.32 * O_2) + (0.44 * CO_2) + (0.28 * (100 - (CO_2 + O_2)))$$

$$MWs = (MWd * (1 - (BWS/100))) + (18 * (BWS/100))$$

$$Tsa = Ts + 460$$

$$Ps = Pb + (Pstatic/13.6)$$

$$Vs = 85.49 * Cp * avg\sqrt{DeltaP} * \sqrt{Tsa/(Ps * MWs)}$$

$$Qs(act) = 60 * Vs * As$$

$$Qs(std) = 17.64 * (1 - (BWS/100)) * (Ps/Tsa) * Qs(act)$$

where:
MWd = Dry molecular weight source gas, lb/lb-mole.
MWs = Wet molecular weight source gas, lb/lb-mole.
Tsa = Source Temperature, absolute(oR)
Ps = Absolute stack static pressure, inches Hg.
Vs = Average gas stream velocity, ft/sec.
Qs(act) = Volumetric flow rate of wet stack gas at actual, wacf/min
Qs(std) = Volumetric flow rate of dry stack gas at standard conditions, dscf/min

Comments _____

Meth2.xls

Copyright Roy F Weston Inc October 1998

RUN DATA

Number 1

Client: **Bowater**
Location: **Catawba, SC**
Source: **No. 2 Combination Boiler** Calibration **1**

Project Number: **03917.008.015**
Operator: **T. Simpkins**
Date: **6 Apr 2010**

Time	O_2 mv	O_2 %	CO_2 mv	CO_2 %
12:53:22	502	12.5	97	7.5
12:53:37	502	12.5	97	7.5
12:53:52	502	12.5	97	7.5
12:54:07	501	12.5	95	7.3
12:54:22	501	12.5	95	7.3
12:54:37	501	12.5	95	7.3
12:54:52	501	12.5	95	7.3
12:55:07	501	12.5	95	7.3
12:55:22	501	12.5	95	7.3
Avgs	**501**	**12.5**	**96**	**7.4**

RUN DATA

Number 2

Client: **Bowater**
Location: **Catawba, SC**
Source: **No. 2 Combination Boiler**

Calibration **1**

Project Number: **03917.008.015**
Operator: **T. Simpkins**
Date: **6 Apr 2010**

Time	O_2 mv	O_2 %	CO_2 mv	CO_2 %
14:48:59	469	11.7	104	8.1
14:49:14	469	11.7	105	8.2
14:49:29	469	11.7	107	8.4
14:49:44	469	11.7	106	8.3
14:49:59	469	11.7	106	8.3
14:50:14	468	11.7	102	7.9
14:50:29	467	11.6	103	8.0
14:50:44	468	11.7	103	8.0
Avgs	**469**	**11.7**	**105**	**8.1**

RUN DATA

Number 3

Client: **Bowater**
Location: **Catawba, SC**
Source: **No. 2 Combination Boiler** Calibration **1**

Project Number: **03917.008.015**
Operator: **T. Simpkins**
Date: **6 Apr 2010**

Time	O_2 mv	O_2 %	CO_2 mv	CO_2 %
16:43:42	448	11.2	113	8.9
16:43:57	447	11.1	113	8.9
16:44:12	447	11.1	112	8.8
16:44:27	447	11.1	111	8.7
16:44:42	447	11.1	111	8.7
16:44:57	447	11.1	112	8.8
16:45:12	447	11.1	111	8.7
16:45:27	447	11.1	111	8.7
Avgs	**447**	**11.1**	**112**	**8.8**

CALIBRATION DATA

Number 1

Client: **Bowater**
Location: **Catawba, SC**
Source: **No. 2 Combination Boiler**

Project Number: **03917.008.015**
Operator: **T. Simpkins**
Date: **6 Apr 2010**

Start Time: 10:16

O_2
Method: EPA 3A
Calibration Type: Linear Regression

Calibration Results

%	Cylinder ID	Result, mv
Zero	-	6
10.2	CC42605	408
20.2	XC025060B	808

Curve Coefficients

Slope	Intercept	Corr. Coeff.
39.70	5	>0.9999

CO_2
Method: EPA 3A
Calibration Type: Linear Regression

Calibration Results

%	Cylinder ID	Result, mv
Zero	-	14
10.2	CC42605	127
20.1	XC025060B	238

Curve Coefficients

Slope	Intercept	Corr. Coeff.
11.17	14	>0.9999

CALIBRATION ERROR DATA

Number 1

Client: **Bowater**
Location: **Catawba, SC**
Source: **No. 2 Combination Boiler**

Calibration **1**

Project Number: **03917.008.015**
Operator: **T. Simpkins**
Date: **6 Apr 2010**

Start Time: 10:16

O_2
Method: EPA 3A
Span Conc. 20.2 %
Slope 39.70 **Intercept** 5.0

Standard %	Response mv	Result %	Difference %	Error %	Status
Zero	6	0.0	0.0	0.0	Pass ✓
10.2	408	10.2	0.0	0.0	Pass ✓
20.2	808	20.2	0.0	0.0	Pass ✓

CO_2
Method: EPA 3A
Span Conc. 20.1 %
Slope 11.17 **Intercept** 13.7

Standard %	Response mv	Result %	Difference %	Error %	Status
Zero	14	0.0	0.0	0.0	Pass ✓
10.2	127	10.1	-0.1	-0.5	Pass ✓
20.0	238	20.1	0.1	0.5	Pass ✓

✓ JB

APPENDIX E
FIELD DATA – NO. 2 LIME KILN

PARTICULATE MATTER

Bowater
Catawba, SC

03917.008.015
No. 2 Lime Kiln

ISOKINETIC CALCULATIONS

Run Number		1	2	3	Mean
Date		3/30/2010	3/30/2010	3/30/2010	---
Time Began		1145	1329	1508	---
Time Ended		1250	1433	1631	---
		INPUT DATA			
Sampling Time, min	(Theta)	60.0	60	60	60
Stack Diameter, in.	(Dia.)	71.00	71.00	71.00	71.00
Barometric Pressure, in. Hg	(Pb)	29.40	29.40	29.40	29.40
Static Pressure, in. H2O	(Pg)	-0.20	-0.20	-0.20	-0.20
Pitot Tube Coefficient	(Cp)	0.84	0.84	0.84	0.84
Meter Correction Factor	(Y)	0.9960	0.9960	0.9960	0.9960
Orifice Calibration Value	(Delta H@)	1.8080	1.8080	1.8080	1.8080
Nozzle Diameter, in.	(Dn)	0.370	0.370	0.370	0.370
Meter Volume, ft^3	(Vm)	44.174	43.160	43.894	43.743
Meter Temperature, °F	(Tm)	96.6	91.8	95.9	94.8
Meter Temperature, °R	(Tm-R)	556.6	551.8	555.9	554.8
Meter Orifice Pressure, in. H2O	(Delta H)	1.763	1.703	1.744	1.737
Ave Sq Rt Orifice Press, (in. H2O)^½	((Delta H)½)avg)	1.325	1.303	1.318	1.315
Volume H2O Collected, mL	(Vlc)	367.1	364.3	383.3	371.6
CO2 Concentration, %	(CO2)	19.3	19.0	17.9	18.7
O2 Concentration, %	(O2)	6.2	6.4	6.8	6.5
Ave Sq Rt Velo Head, (in. H2O)^½	((Delta P)½)avg)	0.477	0.473	0.476	0.475
Stack Temperature, °F	(Ts)	391.3	377.5	372.4	380.4
Stack Temperature, °R	(Ts-R)	851.3	837.5	832.4	840.4
Particulate Collected, g	(Mn)	0.0101	0.0067	0.0081	0.0083
		CALCULATED DATA			
Nozzle Area, in^2	(An)	1.08E-01	1.08E-01	1.08E-01	1.08E-01
Stack Area, ft^2	(As)	27.49	27.49	27.49	27.49
Stack Pressure, in. Hg	(Ps)	29.39	29.39	29.39	29.39
Meter Pressure, in. Hg	(Pm)	29.53	29.53	29.53	29.53
Standard Meter Volume, ft^3	(Vmstd)	41.176	40.574	40.964	40.905
Standard Water Volume, ft^3	(Vwstd)	17.279	17.148	18.042	17.490
Moisture Fraction (Measured)	(BWS)	0.296	0.297	0.306	0.299
Moisture Fraction (lower sat/meas)	(BWS)	0.296	0.297	0.306	0.299
Mol. Wt. of Dry Gas, lb/lb-mole	(Md)	31.34	31.30	31.14	31.26
Mol. Wt. of Stack Gas, lb/lb-mole	(Ms)	27.39	27.35	27.12	27.29
Average Stack Gas Velocity, ft/sec	(Vs)	35.23	34.68	34.94	34.95
Stack Gas Flow, actual, ft^3/min	(Qa)	58111	57205	57631	57649
Stack Gas Flow, Std , ft^3/min	(Qs)	24924	24888	24915	24909
Isokinetic Sampling Rate, %	(%I)	101.4	100.1	100.9	100.8
Particulate Conc @ Std Cond, gr/ft^3	(Cs)	0.004	0.003	0.003	0.003
Particulate Conc @ % O2, gr/ft^3 10	(Cs @ 10%)	0.003	0.002	0.002	0.002
Particulate Emission, lb/hr	(PMR)	0.808	0.543	0.651	0.67
Calibration check	(Yqa)	0.9984	1.0013	1.0021	1.001
Percent difference from Y					0.46%

VNV
5-9 JB

ISOKINETIC FIELD DATA SHEET

EPA Method 5 - Particulate (Pulp & Paper)

Client	Bowater
W.O.#	03917.008.015
Project ID	NA
Mode/Source ID	
Samp. Loc. ID	Catawba, SC
Run No.ID	ONE
Test Method ID	M5
Date ID	NA
Source/Location	No. 2 Lime Kiln
Sample Date	30-Mar-10
Baro. Press (in Hg)	~~29.95~~ 29.40
Operator	RG/LW

Stack Conditions

	Assumed	Actual
% Moisture	28.525	
Impinger Vol (ml)		356
Silica gel (g)		11.1
CO2, % by Vol	8.5 / 20.614	19.3
O2, % by Vol	6.5 / ~~5~~ 5	6.2
Temperature (°F)	~~340~~	
Meter Temp (°F)		
Static Press (in H_2O)	-0.2	-.20
Ambient Temp (°F)		

Meter Box ID	AO 20
Meter Box Y	0.996
Meter Box Del H	1.808
Probe ID / Length	7
Probe Material	SS
Pitot / Thermocouple ID	
Pitot Coefficient	0.84
Nozzle ID	.370
Avg Nozzle Dia (in)	.370
Area of Stack (ft²)	27.49
Sample Time	60
Total Traverse Pts	12

K Factor

Leak Checks	Initial	Mid-Point	Final
Sample Train (ft³)	.016		.006
Leak Check @ (in Hg)	15		9
Pitot good	yes / no	yes / no	yes / no
Orsat good	yes / no	yes / no	yes / no

Temp Check	Pre-Test Set	Post-Test Set
Meter Box Temp		
Reference Temp		
Pass/Fail (+/- 2°)	Pass / Fail	Pass / Fail
Temp Change Response ?	yes / no	yes / no

TRAVERSE POINT NO.	SAMPLE TIME (min)	CLOCK TIME (plant time)	VELOCITY PRESSURE Delta P (in H2O)	ORIFICE PRESSURE Delta H (in H2O)	DRY GAS METER READING (ft³)	STACK TEMP (°F)	DGM INLET TEMP (°F)	DGM OUTLET TEMP (°F)	PROBE TEMP (°F)	FILTER BOX TEMP (F)	IMPINGER EXIT TEMP (°F)	SAMPLE TRAIN VAC (in Hg)		COMMENTS
	0	11-15			701.008									
1	5		.16	1.23	704.2	389	91	91	243	243	50	4		
2	10		.23	1.78	707.7	385	94	95	255	253	49	4		
3	15		.25	1.92	711.5	396	96	95	260	253	48	5		
4	20		.22	1.69	715.2	397	98	95	262	253	51	5		
5	25		.21	1.61	718.7	396	99	95	263	252	55	5		
6	30	1215	.22	1.70	722.359	394	100	95	255	252	58	5		
1	35	1220	.23	1.77	726.0	392	96	95	253	256	61	5		
2	40		.25	1.94	729.8	389	99	95	266	251	62	5		
3	45		.27	2.08	733.8	393	100	96	270	250	60	5		
4	50		.27	2.09	737.8	393	101	96	268	249	60	6		
5	55		.22	1.70	741.5	392	101	97	262	251	59	6		
6	60	1250	.21	1.65	745.182	379	101	97	257	249	58	5		

Avg Sqrt Delta P	Avg Delta H	Total Volume	Avg Ts	Avg Tm	Min/Max	Min/Max	Max Temp	Max Vac	Max Temp
.4777	1.763	44.174	391.3	96.6	243/270	243/256	62	6	
.228	Avg Sqrt Del H 1.325								

Comments: BPS 29.7
Iso 101.0%
35.27 fps
58189 ACFM
24927 SCFM

DA-1475

WESTON MANAGERS DESIGNERS/CONSULTANTS

60

ISOKINETIC FIELD DATA SHEET

EPA Method 5 - Particulate (Pulp & Paper)

Client	Bowater
W.O.#	03917.008.015
Project ID	NA
Mode/Source ID	
Samp. Loc. ID	Catawba, SC
Run No.ID	TW 0
Test Method ID	M5
Date ID	NA
Source/Location	No. 2 Lime Kiln
Sample Date	30-Mar-10
Baro. Press (in Hg)	29.40 ~~30.95~~
Operator	RG/ LW

Stack Conditions

	Assumed	Actual
% Moisture	~~29.725~~	
Impinger Vol (ml)		354
Silica gel (g)		10.3
CO2, % by Vol	19.0 ~~14~~	19.0
O2, % by Vol	6.2 ~~5~~	6.4
Temperature (°F)	~~240~~	
Meter Temp (°F)		
Static Press (in H_2O)	-0.2	-.2
Ambient Temp (°F)		

Meter Box ID	AO 20
Meter Box Y	0.996
Meter Box Del H	1.808
Probe ID / Length	7
Probe Material	ss
Pitot / Thermocouple ID	
Pitot Coefficient	0.84
Nozzle ID	.370
Avg Nozzle Dia (in)	.370
Area of Stack (ft^2)	27.49
Sample Time	60
Total Traverse Pts	12

K Factor

Leak Checks	Initial	Mid-Point	Final
Sample Train (ft^3)	.008		.007
Leak Check @ (in Hg)	15		7
Pitot good	yes / no	yes / no	yes / no
Orsat good	yes / no	yes / no	yes / no

Temp Check	Pre-Test Set	Post-Test Set
Meter Box Temp		
Reference Temp		
Pass/Fail (+/- 2°)	Pass / Fail	Pass / Fail
Temp Change Response ?	yes / no	yes / no

TRAVERSE POINT NO.	SAMPLE TIME (min)	CLOCK TIME (plant time)	VELOCITY PRESSURE Delta P (in H_2O)	ORIFICE PRESSURE Delta H (in H_2O)	DRY GAS METER READING (ft^3)	STACK TEMP (°F)	DGM INLET TEMP (°F)	DGM OUTLET TEMP (°F)	PROBE TEMP (°F)	FILTER BOX TEMP (F)	IMPINGER EXIT TEMP (°F)	SAMPLE TRAIN VAC (in Hg)		COMMENTS
	0	1329			746.002									
1	5		.21	1.60	749.5	377	93	93	252	249	60	4		
2	10		.24	1.82	753.2	378	92	92	255	250	52	5		
3	15		.25	1.89	756.9	382	93	91	258	250	47	5		
4	20		.23	1.74	760.7	383	94	91	263	251	48	5		
5	25		.22	1.68	764.4	376	95	91	254	251	48	5		
6	30	1359	.20	1.53	767.983	375	95	90	255	249	48	5		
1	35	1403	.16	1.21	770.9	376	90	90	254	251	54	4		
2	40		.23	1.78	774.5	363	93	90	261	251	48	4		
3	45		.25	1.89	778.2	379	93	89	267	252	47	5		
4	50		.26	1.96	782.0	382	93	89	266	251	49	5		
5	55		.22	1.66	785.6	381	94	89	258	252	50	6		
6	60	1433	.22	1.67	789.162	378	95	89	257	251	51	5		

Avg Sqrt Delta P	Avg Delta H	Total Volume	Avg Ts	Avg Tm	Min/Max	Min/Max	Max Temp	Max Vac	Max Temp
.473	1.703	43.160	377.5	91.8	252/267	249/252	60	6	
.224	Avg Sqrt Del H 1.303								

Comments: Bws 29.7%
Iso 100.1%
34.65 FPS
57167 ACFM
24868 SCFM

DA-1476

WESTON MANAGERS DESIGNERS/CONSULTANTS

ISOKINETIC FIELD DATA SHEET

EPA Method 5 - Particulate (Pulp & Paper)

Client	Bowater
W.O.#	03917.008.015
Project ID	NA
Mode/Source ID	
Samp. Loc. ID	Catawba, SC
Run No.ID	THREE
Test Method ID	M5
Date ID	NA
Source/Location	No. 2 Lime Kiln
Sample Date	30-Mar-10
Baro. Press (in Hg)	29.40 ~~30.95~~
Operator	RG/ LW

Stack Conditions

	Assumed	Actual
% Moisture	29.7 ~~25~~	
Impinger Vol (ml)		372
Silica gel (g)		11.3
CO2, % by Vol	19 ~~14~~	17.9
O2, % by Vol	6.2 ~~5~~	6.8
Temperature (°F)	~~340~~	
Meter Temp (°F)		
Static Press (in H_2O)	-0.2	-.20
Ambient Temp (°F)		

Meter Box ID	AO 20
Meter Box Y	0.996
Meter Box Del H	1.808
Probe ID / Length	7J / 7'
Probe Material	ss
Pitot / Thermocouple ID	P7
Pitot Coefficient	0.84
Nozzle ID	.370
Avg Nozzle Dia (in)	.370
Area of Stack (ft²)	27.49
Sample Time	60
Total Traverse Pts	12

K Factor

Leak Checks	Initial	Mid-Point	Final
Sample Train (ft³)	.014		
Leak Check @ (in Hg)	14		10
Pitot good	(yes) / no	yes / no	(yes) / no
Orsat good	(yes) / no	yes / no	(yes) / no
Temp Check	Pre-Test Set		Post-Test Set
Meter Box Temp			
Reference Temp			
Pass/Fail (+/- 2°)	Pass / Fail		Pass / Fail
Temp Change Response ?	yes / no		yes / no

TRAVERSE POINT NO.	SAMPLE TIME (min)	CLOCK TIME (plant time)	VELOCITY PRESSURE Delta P (in H2O)	ORIFICE PRESSURE Delta H (in H2O)	DRY GAS METER READING (ft³)	STACK TEMP (°F)	DGM INLET TEMP (°F)	DGM OUTLET TEMP (°F)	PROBE TEMP (°F)	FILTER BOX TEMP (°F)	IMPINGER EXIT TEMP (°F)	SAMPLE TRAIN VAC (in Hg)		COMMENTS
	0	1508			789.502									
1	5		.16	1.23	792.6	362	90	90	240	249	57	4		
2	10		.23	1.77	796.2	363	91	91	254	250	49	4		
3	15		.26	1.96	800.1	381	94	91	265	251	49	4		
4	20		.25	1.90	803.9	379	96	92	270	251	49	6		
5	25		.24	1.82	807.7	380	98	93	258	252	49	6		
6	30	1538	.21	1.61	811.180	375	99	94	256	252	49	6		
1	35	1541	.19	1.45	814.5	377	97	96	251	251	49	5		
2	40		.25	1.94	818.3	367	100	97	262	251	49	5		
3	45	1556 ↓	.26	2.00	822.3	374 ~~377~~	102	98	266	251	47	6		Kiln ↓
4	50	1615 ↑	.23	1.77	826.0	~~377~~ 372	98	99	252	251	50	6		
5	55		.23	1.78	829.8	370	99	98	255	250	45	6		
6	60	1631	.22	1.70	833.396	369	100	98	253	252	44	6		

Avg Sqrt Delta P	Avg Delta H	Total Volume	Avg Ts	Avg Tm	Min/Max	Min/Max	Max Temp	Max Vac	Max Temp
.476	1.744	43.894	372.41	95.9	240/270	249/252	57	6	
.228	Avg Sqrt Del H 1.318								

Comments: BDS 30.7%
Eso 100.7%
34.88 fps
57533 ACFM
24829 SCFM

DA-1477

WESTON MANAGERS DESIGNERS/CONSULTANTS

62

SAMPLE RECOVERY FIELD DATA

EPA Method 5 - Particulate (Pulp & Paper)

Client	Bowater	W.O. #	03917.008.015
Location/Plant	Catawba, SC	Source & Location	No. 2 Lime Kiln

Run No. ONE Sample Date 30 MAR 10 Recovery Date 30 MAR 10

Sample I.D. DA-1475 Analyst RLJ Filter Number DA-1475

	Impinger									
	1	2	3	4	5	6	7	Imp.Total	8	Total
Contents	Di H20	Di H20	Empty						Silica Gel	
Final	300	232	24						354.7	
Initial	100	100	0						343.6	
Gain	200	132	24					356	11.1	367.1

Impinger Color ✓ Labeled? Y

Silica Gel Condition ✓ Sealed? Y

Run No. TWO Sample Date 30 MAR 10 Recovery Date 30 MAR 10

Sample I.D. DA-1476 Analyst RRJ Filter Number DA-1476

	Impinger									
	1	2	3	4	5	6	7	Imp.Total	8	Total
Contents	Di H20	Di H20	Empty						Silica Gel	
Final	324	230	0						356.0	
Initial	100	100	0						345.7	
Gain	224	130	0					354	10.3	364.3

Impinger Color ✓ Labeled? Y

Silica Gel Condition ✓ Sealed? Y

Run No. THREE Sample Date 30 MAR 10 Recovery Date 30 MAR 10

Sample I.D. DA-1477 Analyst RLJ Filter Number DA-1477

	Impinger									
	1	2	3	4	5	6	7	Imp.Total	8	Total
Contents	Di H20	Di H20	Empty						Silica Gel	
Final	340	232	0						357.2	
Initial	100	100	0						345.9	
Gain	240	132	0					372	11.3	383.3

Impinger Color ✓ Labeled? Y

Silica Gel Condition ✓ Sealed? Y

Check COC for Sample IDs of Media Blanks

WESTON MANAGERS DESIGNERS/CONSULTANTS

Sample and Velocity Traverse Point Data Sheet - Method 1

Client Bowater
Loaction/Plant Catawba, SC
Source No. 2 Lime Kiln

Operator TS
Date 3/30/2010
W.O. Number 03917.008.015

Duct Type	☒ Circular	☐ Rectangular Duct		Indicate appropriate type
Traverse Type	☐ Particulate Traverse	☒ Velocity Traverse		

Distance from far wall to outside of port (in.) = C	77.0
Port Depth (in.) = D	6.0
Depth of Duct, diameter (in.) = C-D 71	~~27.49~~
Area of Duct (ft^2)	27.49
Total Traverse Points	12
Total Traverse Points per Port	6

Rectangular Ducts Only	
Width of Duct, rectangular duct only (in.)	
Total Ports (rectangular duct only)	

Flow Disturbances	
Upstream - A (ft)	15
Downstream - B (ft)	75
Upstream - A (duct diameters)	2.54
Downstream - B (duct diameters)	12.7

Diagram of Stack

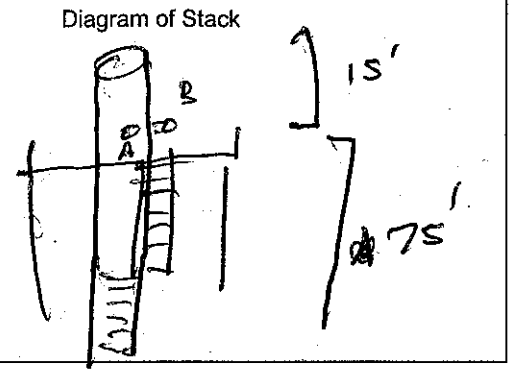

Traverse Point Locations

Traverse Point	% of Duct	Distance from Inside Duct Wall (in)	Distance from Outside of Port (in)
1		3.1	9.1
2		10.4	16.4
3		21.0	27.0
4		50.0	56.0
5		60.6	66.6
6		67.9	73.9
7			
8			
9			
10			
11			
12			

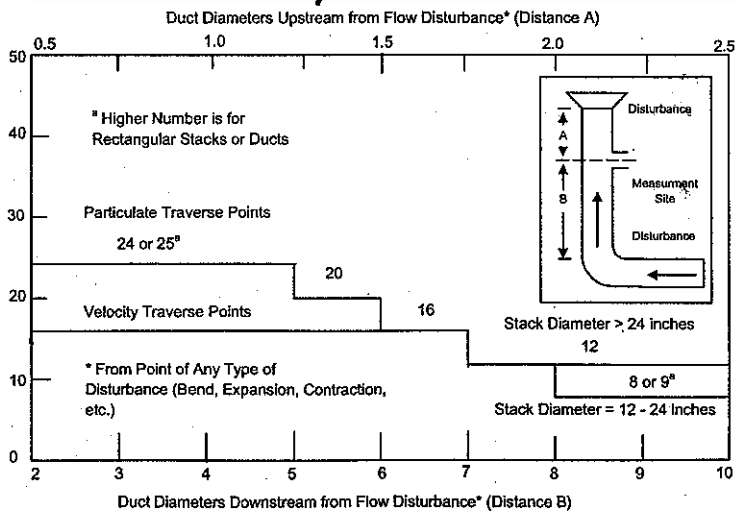

Equivalent Diameter = (2*L*W)/(L+W)

Traverse Point Location Percent of Stack -Circular

Traverse Point	Number of Traverse Points 1	2	3	4	5	6	7	8	9	10	11	12
1		14.6		6.7		4.4		3.2		2.6		2.1
2		85.4		25		14.6		10.5		8.2		6.7
3				75		29.6		19.4		14.6		11.8
4				93.3		70.4		32.3		22.6		17.7
5						85.4		67.7		34.2		25
6						95.6		80.6		65.8		35.6
7								89.5		77.4		64.4
8								96.8		85.4		75
9										91.8		82.3
10										97.4		88.2
11												93.3
12												97.9

Traverse Point Location Percent of Stack -Rectangular

Traverse Point	Number of Traverse Points 1	2	3	4	5	6	7	8	9	10	11	12
1		25.0	16.7	12.5	10.0	8.3	7.1	6.3	5.6	5.0	4.5	4.2
2		75.0	50.0	37.5	30.0	25.0	21.4	18.8	16.7	15.0	13.6	12.5
3			83.3	62.5	50.0	41.7	35.7	31.3	27.8	25.0	22.7	20.8
4				87.5	70.0	58.3	50.0	43.8	38.9	35.0	31.8	29.2
5					90.0	75.0	64.3	56.3	50.0	45.0	40.9	37.5
6						91.7	78.6	68.8	61.1	55.0	50.0	45.8
7							92.9	81.3	72.2	65.0	59.1	54.2
8								93.8	83.3	75.0	68.2	62.5
9									94.4	85.0	77.3	70.8
10										95.0	86.4	79.2
11											95.5	87.5
12												95.8

Rectangular Stack Points & Matrix
9 - 3 x 3
12 - 4 x 3
16 - 4 x 4
20 - 5 x 4
25 - 5 x 5
30 - 6 x 5
36 - 6 x 6
42 - 7 x 6
49 - 7 x 7

WESTON MANAGERS DESIGNERS/CONSULTANTS

Copyright Roy F Weston Inc Oct 1998PV

NITROGEN OXIDES, OXYGEN, AND CARBON DIOXIDE

Bowater
Catawba, South Carolina

03917.008.015
No. 2 Lime Kiln

EMISSION CALCULATIONS

	Run 1	Run 2	Run 3	Mean
Date	3/30/10	3/30/10	3/30/10	---
Time Began	1155	1329	1508	---
Time Ended	1259	1433	1636	---
% Oxygen	6.2	6.4	6.8	6.5
Oxygen Reference Concentration, %	10.0	10.0	10.0	10.0
Nitrogen Oxides MW= 46.01				
Concentration, ppm	180.0	156.0	140.0	158.7
Concentration, ppm @10%O2	133.5	117.3	108.2	119.7

√NV
for JB

RUN SUMMARY

Number 1

Client: **Bowater**
Location: **Catawba, SC**
Source: **No. 2 Lime Kiln**

Calibration **1**

Project Number: **03917.008.015**
Operator: **T. Simpkins**
Date: **30 Mar 2010**

	O_2	CO_2	NO_x
Method	EPA 3A	EPA 3A	EPA 7E
Conc. Units	%	%	ppm

Time: 11:55 to 12:59

Run Averages

	6.3	18.7	176

Pre-run Bias at 10:33

Zero Bias	0.3	0.0	-1
Span Bias	10.1	9.9	120
Span Gas	10.2	10.2	125

Post-run Bias at 13:01

Zero Bias	0.3	0.1	-1
Span Bias	10.2	9.9	124
Span Gas	10.2	10.2	125

Averages corrected for the average of the pre-run and post-run bias

	6.2	19.3	180

RUN SUMMARY

Number 2

Client: **Bowater**
Location: **Catawba, SC**
Source: **No. 2 Lime Kiln**

Calibration **1**

Project Number: **03917.008.015**
Operator: **T. Simpkins**
Date: **30 Mar 2010**

	O_2	CO_2	NO_x
Method	EPA 3A	EPA 3A	EPA 7E
Conc. Units	%	%	ppm

Time: 13:29 to 14:33

Run Averages

	6.5	18.6	155

Pre-run Bias at 13:01

Zero Bias	0.3	0.1	-1
Span Bias	10.2	9.9	124
Span Gas	10.2	10.2	125

Post-run Bias at 14:35

Zero Bias	0.3	0.0	-0
Span Bias	10.1	10.0	124
Span Gas	10.2	10.2	125

Averages corrected for the average of the pre-run and post-run bias

	6.4	19.0	156

RUN SUMMARY

Number 3

Client: **Bowater**
Location: **Catawba, SC**
Source: **No. 2 Lime Kiln**

Calibration **1**

Project Number: **03917.008.015**
Operator: **T. Simpkins**
Date: **30 Mar 2010**

	O_2	CO_2	NO_x
Method	EPA 3A	EPA 3A	EPA 7E
Conc. Units	%	%	ppm

Time: 15:08 to 16:36

Run Averages

	6.8	17.5	139

Pre-run Bias at 14:35

Zero Bias	0.3	0.0	-0
Span Bias	10.1	10.0	124
Span Gas	10.2	10.2	125

Post-run Bias at 16:37

Zero Bias	0.3	0.0	0
Span Bias	10.1	9.9	124
Span Gas	10.2	10.2	125

Averages corrected for the average of the pre-run and post-run bias

	6.8	17.9	140

153

RUN DATA

Number 1

Client: **Bowater**
Location: **Catawba, SC**
Source: **No. 2 Lime Kiln**

Calibration **1**

Project Number: **03917.008.015**
Operator: **T. Simpkins**
Date: **30 Mar 2010**

Time	O_2 mv	O_2 %	CO_2 mv	CO_2 %	NO_x mv	NO_x ppm
		Port A- point 1				
11:56	257	6.2	220	18.9	5660	177
11:57	256	6.2	222	19.1	5656	177
11:58	255	6.2	220	18.9	5633	176
11:59	257	6.2	219	18.8	5545	173
12:00	256	6.2	218	18.7	5559	174
			point 2			
12:01	259	6.3	219	18.8	5595	175
12:02	259	6.3	216	18.5	5637	176
12:03	259	6.3	218	18.7	5627	176
12:04	256	6.2	217	18.6	5666	177
12:05	251	6.1	219	18.8	5744	179
			point 3			
12:06	255	6.2	218	18.7	5746	179
12:07	257	6.2	219	18.8	5809	181
12:08	256	6.2	217	18.6	5803	181
12:09	257	6.2	219	18.8	5682	177
12:10	254	6.2	220	18.9	5641	176
			point 4			
12:11	255	6.2	220	18.9	5583	174
12:12	251	6.1	221	19.0	5637	176
12:13	253	6.1	222	19.1	5623	176
12:14	256	6.2	220	18.9	5643	176
12:15	257	6.2	220	18.9	5583	174
			point 5			
12:16	258	6.3	219	18.8	5549	173
12:17	257	6.2	219	18.8	5568	174
12:18	258	6.3	218	18.7	5625	176
12:19	256	6.2	219	18.8	5708	178
12:20	257	6.2	217	18.6	5721	179
12:21	257	6.2	218	18.7	5728	179
			point 6			
12:22	256	6.2	218	18.7	5722	179
12:23	256	6.2	217	18.6	5711	178
12:24	253	6.1	219	18.8	5720	179
12:25	252	6.1	221	19.0	5715	178
12:26	253	6.1	219	18.8	5728	179
		Port B- point 1				
12:29	258	6.3	219	18.8	5699	178
12:30	261	6.3	218	18.7	5662	177
12:31	256	6.2	221	19.0	5640	176
12:32	256	6.2	220	18.9	5657	177

RUN DATA

Number 1

Client: **Bowater**
Location: **Catawba, SC**
Source: **No. 2 Lime Kiln**

Calibration **1**

Project Number: **03917.008.015**
Operator: **T. Simpkins**
Date: **30 Mar 2010**

Time	O_2 mv	O_2 %	CO_2 mv	CO_2 %	NO_x mv	NO_x ppm
12:33	256	6.2	221	19.0	5595	175
			point 2			
12:34	258	6.3	220	18.9	5596	175
12:35	265	6.4	217	18.6	5675	177
12:36	264	6.4	217	18.6	5574	174
12:37	264	6.4	218	18.7	5582	174
12:38	262	6.4	218	18.7	5611	175
			point 3			
12:39	261	6.3	216	18.5	5628	176
12:40	260	6.3	216	18.5	5634	176
12:41	261	6.3	215	18.5	5587	174
12:42	266	6.5	214	18.4	5550	173
12:43	264	6.4	214	18.4	5664	177
			point 4			
12:44	265	6.4	214	18.4	5644	176
12:45	261	6.3	215	18.5	5619	175
12:46	263	6.4	216	18.5	5546	173
12:47	262	6.4	214	18.4	5532	173
12:48	264	6.4	214	18.4	5598	175
			point 5			
12:49	267	6.5	216	18.5	5521	172
12:50	266	6.5	216	18.5	5636	176
12:51	267	6.5	215	18.5	5624	176
12:52	264	6.4	217	18.6	5646	176
12:53	263	6.4	216	18.5	5599	175
			point 6			
12:54	263	6.4	216	18.5	5549	173
12:55	264	6.4	217	18.6	5621	175
12:56	265	6.4	216	18.5	5640	176
12:57	264	6.4	216	18.5	5641	176
12:58	265	6.4	217	18.6	5564	174
12:59	263	6.4	213	18.3	5528	173
Avgs	**259**	**6.3**	**218**	**18.7**	**5636**	**176**

RUN DATA
Number 2

Client: **Bowater**
Location: **Catawba, SC**
Source: **No. 2 Lime Kiln**

Calibration **1**

Project Number: **03917.008.015**
Operator: **T. Simpkins**
Date: **30 Mar 2010**

Time	O_2 mv	O_2 %	CO_2 mv	CO_2 %	NO_x mv	NO_x ppm
		Port B- point 1				
13:30	260	6.3	219	18.8	4892	153
13:31	260	6.3	219	18.8	4810	150
13:32	263	6.4	219	18.8	4837	151
13:33	261	6.3	220	18.9	4864	152
13:34	260	6.3	220	18.9	4947	154
			point 2			
13:35	257	6.2	222	19.1	4929	154
13:36	254	6.2	222	19.1	4922	153
13:37	259	6.3	221	19.0	5147	161
13:38	261	6.3	218	18.7	5206	162
13:39	265	6.4	217	18.6	5098	159
			point 3			
13:40	264	6.4	216	18.5	5052	158
13:41	267	6.5	216	18.5	5077	158
13:42	266	6.5	216	18.5	5157	161
13:43	265	6.4	216	18.5	5261	164
13:44	266	6.5	216	18.5	5274	165
			point 4			
13:45	267	6.5	217	18.6	5254	164
13:46	272	6.6	214	18.4	5205	162
13:47	274	6.7	214	18.4	5309	166
13:48	272	6.6	215	18.5	5365	167
13:49	270	6.6	216	18.5	5381	168
			point 5			
13:50	270	6.6	216	18.5	5460	170
13:51	273	6.6	217	18.6	5319	166
13:52	275	6.7	215	18.5	5210	163
13:53	275	6.7	216	18.5	5180	162
13:54	271	6.6	217	18.6	5207	162
			point 6			
13:55	272	6.6	216	18.5	5148	161
13:56	269	6.5	217	18.6	5205	162
13:57	266	6.5	218	18.7	5202	162
13:58	267	6.5	216	18.5	5239	163
13:59	269	6.5	216	18.5	5269	164
		Port A- point 1				
14:02	269	6.5	215	18.5	5129	160
14:03	267	6.5	217	18.6	5173	161
14:04	269	6.5	216	18.5	5192	162
14:05	266	6.5	216	18.5	5222	163
14:06	266	6.5	217	18.6	5209	163

RUN DATA

Number 2

Client: **Bowater**
Location: **Catawba, SC**
Source: **No. 2 Lime Kiln**

Calibration **1**

Project Number: **03917.008.015**
Operator: **T. Simpkins**
Date: **30 Mar 2010**

Time	O_2 mv	O_2 %	CO_2 mv	CO_2 %	NO_x mv	NO_x ppm
			point 2			
14:07	268	6.5	217	18.6	5129	160
14:08	271	6.6	216	18.5	5021	157
14:09	270	6.6	218	18.7	5000	156
14:10	268	6.5	218	18.7	5027	157
14:11	266	6.5	219	18.8	4989	156
			point 3			
14:12	269	6.5	218	18.7	4902	153
14:13	266	6.5	216	18.5	4921	153
14:14	267	6.5	217	18.6	4854	151
14:15	271	6.6	216	18.5	4735	148
14:16	269	6.5	217	18.6	4577	143
			point 4			
14:17	266	6.5	215	18.5	4574	143
14:18	265	6.4	215	18.5	4492	140
14:19	266	6.5	214	18.4	4391	137
14:20	268	6.5	212	18.2	4386	137
14:21	267	6.5	212	18.2	4440	138
			point 5			
14:22	269	6.5	214	18.4	4345	135
14:23	268	6.5	213	18.3	4362	136
14:24	265	6.4	215	18.5	4437	138
14:25	264	6.4	214	18.4	4532	141
14:26	265	6.4	214	18.4	4628	144
			point 6			
14:27	267	6.5	215	18.5	4692	146
14:28	268	6.5	217	18.6	4584	143
14:29	270	6.6	214	18.4	4556	142
14:30	271	6.6	216	18.5	4799	150
14:31	268	6.5	216	18.5	4977	155
14:32	267	6.5	216	18.5	4932	154
14:33	268	6.5	215	18.5	4774	149
Avgs	**267**	**6.5**	**216**	**18.6**	**4958**	**155**

RUN DATA

Number 3

Client: **Bowater**
Location: **Catawba, SC**
Source: **No. 2 Lime Kiln**

Calibration **1**

Project Number: **03917.008.015**
Operator: **T. Simpkins**
Date: **30 Mar 2010**

Time	O_2 mv	O_2 %	CO_2 mv	CO_2 %	NO_x mv	NO_x ppm
		Port A- point 1				
15:09	282	6.9	203	17.3	4227	132
15:10	280	6.8	205	17.5	4318	135
15:11	280	6.8	204	17.4	4328	135
15:12	277	6.8	206	17.6	4435	138
15:13	276	6.7	206	17.6	4467	139
		point 2				
15:14	275	6.7	207	17.7	4447	139
15:15	277	6.8	205	17.5	4507	140
15:16	276	6.7	205	17.5	4482	140
15:17	278	6.8	204	17.4	4505	140
15:18	279	6.8	204	17.4	4602	143
		point 3				
15:19	273	6.6	207	17.7	4659	145
15:20	274	6.7	206	17.6	4583	143
15:21	274	6.7	206	17.6	4531	141
15:22	273	6.6	207	17.7	4502	140
15:23	272	6.6	207	17.7	4476	139
		point 4				
15:24	273	6.6	206	17.6	4410	137
15:25	273	6.6	209	17.9	4410	137
15:26	269	6.5	210	18.0	4414	138
15:27	267	6.5	211	18.1	4375	136
15:28	270	6.6	211	18.1	4318	135
		point 5				
15:29	272	6.6	210	18.0	4267	133
15:30	273	6.6	209	17.9	4240	132
15:31	270	6.6	212	18.2	4293	134
15:32	270	6.6	211	18.1	4329	135
15:33	267	6.5	212	18.2	4366	136
		point 6				
15:34	268	6.5	211	18.1	4438	138
15:35	265	6.4	212	18.2	4465	139
15:36	268	6.5	209	17.9	4484	140
15:37	270	6.6	210	18.0	4488	140
15:38	271	6.6	208	17.8	4475	139
		Port B- point 1				
15:41	270	6.6	211	18.1	4708	147
15:42	270	6.6	209	17.9	4675	146
15:43	271	6.6	210	18.0	4624	144
15:44	272	6.6	209	17.9	4542	142
15:45	272	6.6	210	18.0	4531	141

RUN DATA

Number 3

Client: **Bowater**
Location: **Catawba, SC**
Source: **No. 2 Lime Kiln**

Calibration **1**

Project Number: **03917.008.015**
Operator: **T. Simpkins**
Date: **30 Mar 2010**

Time	O_2 mv	O_2 %	CO_2 mv	CO_2 %	NO_x mv	NO_x ppm
			point 2			
15:46	273	6.6	209	17.9	4526	141
15:47	270	6.6	213	18.3	4515	141
15:48	272	6.6	211	18.1	4592	143
15:49	272	6.6	212	18.2	4675	146
15:50	273	6.6	211	18.1	4673	146
			point 3			
15:51	273	6.6	210	18.0	4672	146
15:52	278	6.8	208	17.8	4683	146
15:53	277	6.8	209	17.9	4680	146
15:54	342	8.5	186	15.7	3847	120
15:55	473	11.9	146	12.0	2331	72
			point 4			
16:16	290	7.1	193	16.4	4318	135
16:17	287	7.0	195	16.6	4352	136
16:18	287	7.0	195	16.6	4406	137
16:19	291	7.1	195	16.6	4243	132
16:20	287	7.0	195	16.6	4330	135
			point 5			
16:21	287	7.0	198	16.9	4398	137
16:22	287	7.0	197	16.8	4461	139
16:23	286	7.0	198	16.9	4501	140
16:24	283	6.9	199	16.9	4605	144
16:25	287	7.0	202	17.2	4456	139
			point 6			
16:26	285	7.0	201	17.1	4513	141
16:27	284	6.9	203	17.3	4522	141
16:28	286	7.0	202	17.2	4501	140
16:29	285	7.0	202	17.2	4624	144
16:30	284	6.9	202	17.2	4667	145
16:31	280	6.8	204	17.4	4719	147
16:32	282	6.9	203	17.3	4725	147
16:33	284	6.9	203	17.3	4733	148
16:34	283	6.9	204	17.4	4782	149
16:35	284	6.9	201	17.1	4710	147
16:36	281	6.9	201	17.1	4743	148
Avgs	**281**	**6.8**	**204**	**17.5**	**4461**	**139**

BIAS
Number 1

Client: **Bowater**
Location: **Catawba, SC**
Source: **No. 2 Lime Kiln**

Calibration **1**

Project Number: **03917.008.015**
Operator: **T. Simpkins**
Date: **30 Mar 2010**

Start Time: 10:33

O_2
Method: EPA 3A
Span Conc. 20.2 %

Bias Results

Standard Gas	Cal. %	Response mv	Bias %	Difference %	Error %	Status
Zero	0.1	32	0.3	0.2	1.1	Pass ✓
Span	10.1	406	10.1	0.0	0.2	Pass ✓

CO_2
Method: EPA 3A
Span Conc. 20.1 %

Bias Results

Standard Gas	Cal. %	Response mv	Bias %	Difference %	Error %	Status
Zero	0.1	19	0.0	-0.1	-0.5	Pass ✓
Span	10.0	124	9.9	-0.1	-0.4	Pass ✓

NO_x
Method: EPA 7E
Span Conc. 253 ppm

Bias Results

Standard Gas	Cal. ppm	Response mv	Bias ppm	Difference ppm	Error %	Status
Zero	-1	17	-1	0	0.0	Pass ✓
Span	127	3845	120	-7	-2.8	Pass ✓

✓ gb

BIAS AND CALIBRATION DRIFT

Number 2

Client: **Bowater**
Location: **Catawba, SC**
Source: **No. 2 Lime Kiln**

Calibration **1**

Project Number: **03917.008.015**
Operator: **T. Simpkins**
Date: **30 Mar 2010**

Start Time: 13:01

O_2
Method: EPA 3A
Span Conc. 20.2 %

Bias Results

Standard Gas	Cal. %	Response mv	Bias %	Difference %	Error %	Status
Zero	0.1	32	0.3	0.2	1.1	Pass ✓
Span	10.1	410	10.2	0.1	0.7	Pass ✓

Calibration Drift

Standard Gas	Initial* %	mv	Final %	Difference %	Drift %	Status
Zero	0.3	32	0.3	0.0	0.0	Pass ✓
Span	10.1	410	10.2	0.1	0.5	Pass ✓

*Bias No. 1

CO_2
Method: EPA 3A
Span Conc. 20.1 %

Bias Results

Standard Gas	Cal. %	Response mv	Bias %	Difference %	Error %	Status
Zero	0.1	20	0.1	0.0	0.0	Pass ✓
Span	10.0	124	9.9	-0.1	-0.4	Pass ✓

Calibration Drift

Standard Gas	Initial* %	mv	Final %	Difference %	Drift %	Status
Zero	0.0	20	0.1	0.1	0.5	Pass ✓
Span	9.9	124	9.9	0.0	0.0	Pass ✓

*Bias No. 1

BIAS AND CALIBRATION DRIFT

Number 2

Client: **Bowater**
Location: **Catawba, SC**
Source: **No. 2 Lime Kiln**

Calibration **1**

Project Number: **03917.008.015**
Operator: **T. Simpkins**
Date: **30 Mar 2010**

Start Time: 13:01

NO_x
Method: EPA 7E
Span Conc. 253 ppm

Bias Results

Standard Gas	Cal. ppm	Response mv	Bias ppm	Difference ppm	Error %	Status
Zero	-1	25	-1	0	0.0	Pass ✓
Span	127	3992	124	-3	-1.2	Pass ✓

Calibration Drift

Standard Gas	Initial* ppm	Final mv	Final ppm	Difference ppm	Drift %	Status
Zero	-1	25	-1	0	0.0	Pass ✓
Span	120	3992	124	4	1.6	Pass ✓

*Bias No. 1

BIAS AND CALIBRATION DRIFT

Number 3

Client: **Bowater**
Location: **Catawba, SC**
Source: **No. 2 Lime Kiln**

Calibration **1**

Project Number: **03917.008.015**
Operator: **T. Simpkins**
Date: **30 Mar 2010**

Start Time: 14:35

O_2
Method: EPA 3A
Span Conc. 20.2 %

Bias Results

Standard Gas	Cal. %	Response mv	Bias %	Difference %	Error %	Status
Zero	0.1	31	0.3	0.2	1.1	Pass ✓
Span	10.1	404	10.1	0.0	0.2	Pass ✓

Calibration Drift

Standard Gas	Initial* %	Final mv	Final %	Difference %	Drift %	Status
Zero	0.3	31	0.3	0.0	0.0	Pass ✓
Span	10.2	404	10.1	-0.1	-0.5	Pass ✓

*Bias No. 2

CO_2
Method: EPA 3A
Span Conc. 20.1 %

Bias Results

Standard Gas	Cal. %	Response mv	Bias %	Difference %	Error %	Status
Zero	0.1	19	0.0	-0.1	-0.5	Pass ✓
Span	10.0	125	10.0	0.0	0.1	Pass ✓

Calibration Drift

Standard Gas	Initial* %	Final mv	Final %	Difference %	Drift %	Status
Zero	0.1	19	0.0	-0.1	-0.5	Pass ✓
Span	9.9	125	10.0	0.1	0.5	Pass ✓

*Bias No. 2

TSB

BIAS AND CALIBRATION DRIFT

Number 3

Client: **Bowater**
Location: **Catawba, SC**
Source: **No. 2 Lime Kiln**

Calibration **1**

Project Number: **03917.008.015**
Operator: **T. Simpkins**
Date: **30 Mar 2010**

Start Time: 14:35

NO_x
Method: EPA 7E
Span Conc. 253 ppm

Bias Results

Standard Gas	Cal. ppm	Response mv	Bias ppm	Difference ppm	Error %	Status
Zero	-1	31	-0	1	0.4	Pass
Span	127	3992	124	-3	-1.2	Pass

Calibration Drift

Standard Gas	Initial* ppm	Final mv	Final ppm	Difference ppm	Drift %	Status
Zero	-1	31	-0	1	0.4	Pass
Span	124	3992	124	0	0.0	Pass

*Bias No. 2

BIAS AND CALIBRATION DRIFT

Number 4

Client: **Bowater**
Location: **Catawba, SC**
Source: **No. 2 Lime Kiln**

Calibration **1**

Project Number: **03917.008.015**
Operator: **T. Simpkins**
Date: **30 Mar 2010**

Start Time: 16:37

O_2
Method: EPA 3A
Span Conc. 20.2 %

Bias Results

Standard Gas	Cal. %	Response mv	Bias %	Difference %	Error %	Status
Zero	0.1	32	0.3	0.2	1.1	Pass ✓
Span	10.1	403	10.1	0.0	0.2	Pass ✓

Calibration Drift

Standard Gas	Initial* %	mv	Final %	Difference %	Drift %	Status
Zero	0.3	32	0.3	0.0	0.0	Pass ✓
Span	10.1	403	10.1	0.0	0.0	Pass ✓

*Bias No. 3

CO_2
Method: EPA 3A
Span Conc. 20.1 %

Bias Results

Standard Gas	Cal. %	Response mv	Bias %	Difference %	Error %	Status
Zero	0.1	19	0.0	-0.1	-0.5	Pass ✓
Span	10.0	124	9.9	-0.1	-0.4	Pass ✓

Calibration Drift

Standard Gas	Initial* %	mv	Final %	Difference %	Drift %	Status
Zero	0.0	19	0.0	0.0	0.0	Pass ✓
Span	10.0	124	9.9	-0.1	-0.5	Pass ✓

*Bias No. 3

153

BIAS AND CALIBRATION DRIFT

Number 4

Client: **Bowater**
Location: **Catawba, SC**
Source: **No. 2 Lime Kiln**

Calibration **1**

Project Number: **03917.008.015**
Operator: **T. Simpkins**
Date: **30 Mar 2010**

Start Time: 16:37

NO_x
Method: EPA 7E
Span Conc. 253 ppm

Bias Results

Standard Gas	Cal. ppm	Response mv	Bias ppm	Difference ppm	Error %	Status
Zero	-1	47	0	1	0.4	Pass
Span	127	3984	124	-3	-1.2	Pass

Calibration Drift

Standard Gas	Initial* ppm	Final mv	Final ppm	Difference ppm	Drift %	Status
Zero	-0	47	0	0	0.0	Pass
Span	124	3984	124	0	0.0	Pass

*Bias No. 3

CALIBRATION DATA

Number 1

Client: **Bowater**
Location: **Catawba, SC**
Source: **No. 2 Lime Kiln**

Project Number: **03917.008.015**
Operator: **T. Simpkins**
Date: **30 Mar 2010**

Start Time: 10:25

O_2

Method: EPA 3A

Calibration Type: Linear Regression

Calibration Results

%	Cylinder ID	Result, mv
Zero	-	22
10.2	CC42605	403
20.2	XC025060B	793

Curve Coefficients

Slope	Intercept	Corr. Coeff.
38.17	19	0.9999

CO_2

Method: EPA 3A

Calibration Type: Linear Regression

Calibration Results

%	Cylinder ID	Result, mv
Zero	-	20
10.2	CC42605	125
20.1	XC025060B	233

Curve Coefficients

Slope	Intercept	Corr. Coeff.
10.62	19	0.9999

CALIBRATION DATA

Number 1

Client: **Bowater**
Location: **Catawba, SC**
Source: **No. 2 Lime Kiln**

Project Number: **03917.008.015**
Operator: **T. Simpkins**
Date: **30 Mar 2010**

Start Time: 10:25

NO_x
Method: EPA 7E
Calibration Type: Linear Regression

Calibration Results

ppm	Cylinder ID	Result, mv
Zero	-	7
125	CC244787	4084
253	CC259032	8052

Curve Coefficients

Slope	Intercept	Corr. Coeff.
31.80	41	0.9999

CALIBRATION ERROR DATA

Number 1

Client: **Bowater**
Location: **Catawba, SC**
Source: **No. 2 Lime Kiln**

Calibration **1**

Project Number: **03917.008.015**
Operator: **T. Simpkins**
Date: **30 Mar 2010**

Start Time: 10:25

O_2
Method: EPA 3A
Span Conc. 20.2 %
Slope 38.17 **Intercept** 19.3

Standard %	Response mv	Result %	Difference %	Error %	Status
Zero	22	0.1	0.1	0.5	Pass ✓
10.2	403	10.1	-0.1	-0.5	Pass ✓
20.2	793	20.3	0.1	0.5	Pass ✓

CO_2
Method: EPA 3A
Span Conc. 20.1 %
Slope 10.62 **Intercept** 19.0

Standard %	Response mv	Result %	Difference %	Error %	Status
Zero	20	0.1	0.1	0.5	Pass ✓
10.2	125	10.0	-0.2	-1.0	Pass ✓
20.0	233	20.2	0.2	1.0	Pass ✓

NO_x
Method: EPA 7E
Span Conc. 253 ppm
Slope 31.80 **Intercept** 41

Standard ppm	Response mv	Result ppm	Difference ppm	Error %	Status
Zero	7	-1	-1	-0.4	Pass ✓
125	4084	127	2	0.8	Pass ✓
253	8052	252	-1	-0.4	Pass ✓

METHODS AND ANALYZERS

Client: **Bowater**
Location: **Catawba, SC**
Source: **No. 2 Lime Kiln**

Project Number: **03917.008.015**
Operator: **T. Simpkins**
Date: **30 Mar 2010**

File: C:\Data\Bowater- Catawba, SC\2010 Compliance CEM files\No. 2 LK 30 March 2010 a.cem
Computer: WSAUB60 **Trailer:** 261
Analog Input Device: Keithley KPCMCIA 16AI

Channel 1

Analyte	**O_2**
Method	**EPA 3A**, Using Bias
Analyzer Make, Model & Serial No.	**Servomex 1440; SN 0144001/4303**
Full-Scale Output, mv	**1000**
Analyzer Range, %	**25.0**
Span Concentration, %	**20.2**

Channel 2

Analyte	**CO_2**
Method	**EPA 3A**, Using Bias
Analyzer Make, Model & Serial No.	**Servomex 1440; SN 0144001/4303**
Full-Scale Output, mv	**1000**
Analyzer Range, %	**25.0**
Span Concentration, %	**20.1**

Channel 4

Analyte	**NO_x**
Method	**EPA 7E**, Using Bias
Analyzer Make, Model & Serial No.	**CAI 400CLD S/N 6N06002**
Full-Scale Output, mv	**10000**
Analyzer Range, ppm	**300**
Span Concentration, ppm	**253**

APPENDIX F
FIELD DATA –
NO. 2 RECOVERY FURNACE

PARTICULATE MATTER

Bowater
Catawba, SC

03917.008.015
No. 2 Recovery

ISOKINETIC CALCULATIONS

Run Number		1	2	4	Mean
Date		3/31/2010	3/31/2010	3/31/2010	---
Time Began		922	1125	1516	---
Time Ended		1037	1234	1627	---
INPUT DATA					
Sampling Time, min	(Theta)	64.0	64	64.0	64
Stack Diameter, in.	(Dia.)	114.75	114.75	114.75	114.75
Barometric Pressure, in. Hg	(Pb)	29.41	29.41	29.41	29.41
Static Pressure, in. H2O	(Pg)	-0.33	-0.33	-0.33	-0.33
Pitot Tube Coefficient	(Cp)	0.84	0.84	0.84	0.84
Meter Correction Factor	(Y)	0.9960	0.9960	0.9960	0.9960
Orifice Calibration Value	(Delta H@)	1.8080	1.8080	1.8080	1.8080
Nozzle Diameter, in.	(Dn)	0.270	0.270	0.270	0.270
Meter Volume, ft^3	(Vm)	40.732	41.896	43.639	42.089
Meter Temperature, °F	(Tm)	68.2	79.5	96.3	81.3
Meter Temperature, °R	(Tm-R)	528.2	539.5	556.3	541.3
Meter Orifice Pressure, in. H2O	(Delta H)	1.351	1.394	1.466	1.404
Ave Sq Rt Orifice Press, (in. H2O)^½	((Delta H)½)avg)	1.161	1.180	1.210	1.184
Volume H2O Collected, mL	(Vlc)	277.2	275.0	285.0	279.1
CO2 Concentration, %	(CO2)	12.4	12.4	12.7	12.5
O2 Concentration, %	(O2)	7.2	7.2	7.0	7.1
Ave Sq Rt Velo Head, (in. H2O)^½	((Delta P)½)avg)	0.764	0.761	0.761	0.762
Stack Temperature, °F	(Ts)	347.0	348.9	351.6	349.2
Stack Temperature, °R	(Ts-R)	807.0	808.9	811.6	809.2
Particulate Collected, g	(Mn)	0.0057	0.0042	0.0016	0.0038
Moisture Fraction (at Saturation)	(BWS)	NA	NA	NA	NA
Production Rate, ADTP/hr	(Pr)	26.93	26.80	26.55	26.76
CALCULATED DATA					
Nozzle Area, in^2	(An)	5.73E-02	5.73E-02	5.73E-02	5.73E-02
Stack Area, ft^2	(As)	71.82	71.82	71.82	71.82
Stack Pressure, in. Hg	(Ps)	29.39	29.39	29.39	29.39
Meter Pressure, in. Hg	(Pm)	29.51	29.51	29.5	29.51
Standard Meter Volume, ft^3	(Vmstd)	39.981	40.267	40.682	40.310
Standard Water Volume, ft^3	(Vwstd)	13.048	12.944	13.415	13.136
Moisture Fraction (Measured)	(BWS)	0.246	0.243	0.248	0.246
Moisture Fraction (lower sat/meas)	(BWS)	0.246	0.243	0.248	0.246
Mol. Wt. of Dry Gas, lb/lb-mole	(Md)	30.27	30.27	30.31	30.29
Mol. Wt. of Stack Gas, lb/lb-mole	(Ms)	27.25	27.29	27.26	27.27
Average Stack Gas Velocity, ft/sec	(Vs)	55.07	54.89	55.01	54.99
Stack Gas Flow, actual, ft^3/min	(Qa)	237322	236520	237035	236959
Stack Gas Flow, Std , ft^3/min	(Qs)	114932	114697	113851	114493
Isokinetic Sampling Rate, %	(%I)	98.2	99.1	100.9	99.4
Particulate Conc @ Std Cond, gr/ft^3	(Cs)	0.002	0.002	0.001	0.001
Particulate Conc @ % O2, gr/ft^3 8	(Cs @ 8%)	0.002	0.002	0.001	0.001
Particulate Emission, lb/hr	(PMR)	2.167	1.582	0.59	1.45
Particulate Emission Factor, lb/ADTP	(Pr)	0.080	0.059	0.022	0.054
Calibration check	(Yqa)	1.0034	1.0020	1.0009	1.001
Percent difference from Y					0.53%

JW for GB

ISOKINETIC FIELD DATA SHEET

Client	Bowater
W.O.#	03917.008.015
Project ID	NA
Mode/Source ID	NA
Samp. Loc. ID	stack
Run No.ID	ONE
Test Method ID	M5
Filter No.	DA-1478
Source/Location	No. 2 Recovery
Sample Date	31-Mar-10
Baro. Press (in Hg)	29.41
Operator	LW/RG

Stack Conditions

	Assumed	Actual
% Moisture	26	
Impinger Vol (ml)		268
Silica gel (g)		9.2
CO2, % by Vol	14	12.4
O2, % by Vol	5	7.2
Temperature (°F)	340	
Meter Temp (°F)		
Static Press (in H_2O)	-0.4	-0.33
Ambient Temp (°F)		

Meter Box ID	AO 20
Meter Box Y	0.996
Meter Box Del H	1.808
Probe ID / Length	12C / 12
Probe Material	Stainless Steel
Pitot / Thermocouple ID	P-12
Pitot Coefficient	0.84
Nozzle ID	.270
Avg Nozzle Dia (in)	.270
Area of Stack (ft^2)	71.82
Sample Time	64
Total Traverse Pts	16

K Factor

Leak Checks	Initial	Mid-Point	Final
Sample Train (ft^3)	.014		.003
Leak Check @ (in Hg)	15		6
Pitot good	yes / no	yes / no	yes / no
Orsat good	yes / no	yes / no	yes / no

Temp Check	Pre-Test Set	Post-Test Set
Meter Box Temp		
Reference Temp		
Pass/Fail (+/- 2°)	Pass / Fail	Pass / Fail
Temp Change Response ?	yes / no	yes / no

TRAVERSE POINT NO.	SAMPLE TIME (min)	CLOCK TIME (plant time)	VELOCITY PRESSURE Delta P (in H2O)	ORIFICE PRESSURE Delta H (in H2O)	DRY GAS METER READING (ft³)	STACK TEMP (°F)	DGM INLET TEMP (°F)	DGM OUTLET TEMP (°F)	PROBE TEMP (°F)	FILTER BOX TEMP (°F)	IMPINGER EXIT TEMP (°F)	SAMPLE TRAIN VAC (in Hg)		COMMENTS
	0	0922			834.000									
B- 1	4		.57	1.29	836.5	345	58	59	255	260	53	4		
2	8		.62	1.41	839.1	346	59	59	262	260	45	4		
3	12		.65	1.48	841.7	346	61	60	267	261	44	4		
4	16		.65	1.49	844.3	346	64	61	263	262	43	4		
5	20		.63	1.44	846.9	347	66	62	257	260	43	4		
6	24		.63	1.45	849.6	347	68	63	256	263	43	4		
7	28		.58	1.34	852.3	347	70	64	255	263	42	4		
8	32	0954	.45	1.04	854.542	346	71	65	258	263	42	4		
A- 1	36	1005	.52	1.21	857.0	345	69	70	265	264	42	4		
2	40		.60	1.39	859.5	347	73	70	260	262	40	4		
3	44		.62	1.44	862.0	348	74	70	266	262	40	5		
4	48		.61	1.42	864.5	348	76	71	266	262	40	5		
5	52		.61	1.42	867.1	349	76	71	259	263	41	5		
6	56		.60	1.40	869.7	349	77	72	265	263	42	5		
7	60		.61	1.42	872.4	349	78	73	258	263	42	5		
8	64	1037	.42	.98	874.732	347	79	73	256	262	41	5		
			Avg Sqrt Delta P .764	Avg Delta H 1.351	Total Volume 40.732	Avg Ts 347.0		Avg Tm 68.2	Min/Max 255/267	Min/Max 260/264	Max Temp 53	Max Vac 5	Max Temp	

.586 ✓ Avg Sqrt Del H 1.161 ✓

Comments: BPS 24.9% Iso 97.3%

54.98 fps
236911 ACFm
114316 SCFm

WESTON MANAGERS DESIGNERS/CONSULTANTS

90

ISOKINETIC FIELD DATA SHEET

Client	Bowater
W.O.#	03917.008.015
Project ID	NA
Mode/Source ID	NA
Samp. Loc. ID	stack
Run No.ID	TW 3
Test Method ID	M5
Filter No.	DA-1479
Source/Location	No. 2 Recovery
Sample Date	31-Mar-10
Baro. Press (in Hg)	29.41
Operator	LW/ RG

Stack Conditions

	Assumed	Actual
% Moisture	25 ~~26~~	
Impinger Vol (ml)		266
Silica gel (g)		9.0
CO2, % by Vol	14	12.4
O2, % by Vol	5	7.2
Temperature (°F)		
Meter Temp (°F)		
Static Press (in H_2O)	-0.4	-.33
Ambient Temp (°F)		

Meter Box ID	AO 20
Meter Box Y	0.996
Meter Box Del H	1.808
Probe ID / Length	12-C / 12'
Probe Material	Stainless Steel
Pitot / Thermocouple ID	P-12
Pitot Coefficient	0.84
Nozzle ID	.270
Avg Nozzle Dia (in)	.270
Area of Stack (ft²)	71.82
Sample Time	64
Total Traverse Pts	16

K Factor

Leak Checks	Initial	Mid-Point	Final
Sample Train (ft³)	.010		.005
Leak Check @ (in Hg)	11		7
Pitot good	yes / no	yes / no	yes / no
Orsat good	yes / no	yes / no	yes / no

Temp Check	Pre-Test Set	Post-Test Set
Meter Box Temp		
Reference Temp		
Pass/Fail (+/- 2°)	Pass / Fail	Pass / Fail
Temp Change Response ?	yes / no	yes / no

TRAVERSE POINT NO.	SAMPLE TIME (min)	CLOCK TIME (plant time)	VELOCITY PRESSURE Delta P (in H2O)	ORIFICE PRESSURE Delta H (in H2O)	DRY GAS METER READING (ft³)	STACK TEMP (°F)	DGM INLET TEMP (°F)	DGM OUTLET TEMP (°F)	PROBE TEMP (°F)	FILTER BOX TEMP (°F)	IMPINGER EXIT TEMP (°F)	SAMPLE TRAIN VAC (in Hg)		COMMENTS
	0	1125			876.410									
A 1	4		.57	1.36	879.0	346	64 74	73	250	262	49	4		
2	8		.61	1.46	881.7	347	77	74	254	262	45	4		
3	12		.61	1.46	884.4	347	79	74	261	261	44	4		
4	16		.61	1.46	887.0	348	80	74	267	257	44	4		
5	20		.61	1.47	889.7	348	82	75	262	258	44	4		
6	24		.61	1.46	892.3	349	82	75	252	257	43	4		
7	28		.59	1.42	895.0	350	83	75	254	258	44	5		
8	32	1157	.47	1.13	897.306	349	83	76	263	258	44	5		
B 1	36	1202	.55	1.32	899.9	347	78	76	262	257	45	5		
2	40		.63	1.51	902.5	351	84	77	268	258	44	5		
3	44		.62	1.49	905.2	351	85	78	268	258	43	5		
4	48		.59	1.42	907.9	351	86	78	267	259	44	5		
5	52		.59	1.42	910.6	350	86	79	265	257	46	5		
6	56		.61	1.48	913.3	349	87	79	265	258	46	5		
7	60		.53	1.28	915.8	350	87	80	263	257	46	5		
8	64	1234	.48	1.16	918.296	349	87	80	262	258	46	5		
			Avg Sqrt Delta P	Avg Delta H	Total Volume	Avg Ts		Avg Tm	Min/Max	Min/Max	Max Temp	Max Vac	Max Temp	
			.761 ✓	1.394 ✓	41.896 ✓	348.9 ✓		79.5 ✓	250/268	257/262	49	5		
			.580 ✓	Avg Sqrt Del H 1.180 ✓	Comments:	BWS 24.5%								
						I > 98.8%								

54.77 scf
236014 ACFM
114248 SCFM ✓ JB

WESTON MANAGERS DESIGNERS/CONSULTANTS

ISOKINETIC FIELD DATA SHEET

Client	Bowater
W.O.#	03917.008.015
Project ID	NA
Mode/Source ID	NA
Samp. Loc. ID	stack
Run No.ID	THREE
Test Method ID	M5
Filter No.	PA-1480
Source/Location	No. 2 Recovery
Sample Date	31-Mar-10
Baro. Press (in Hg)	29.41
Operator	LW/RG

Stack Conditions

	Assumed	Actual
% Moisture	24.5 ~~28~~	
Impinger Vol (ml)		270
Silica gel (g)		10.8
CO2, % by Vol	14	12.4
O2, % by Vol	5	7.2
Temperature (°F)		
Meter Temp (°F)		
Static Press (in H_2O)	-0.4	-.33
Ambient Temp (°F)		

Meter Box ID	AO 20		
Meter Box Y	0.996		
Meter Box Del H	1.808		
Probe ID / Length	12-C	12'	
Probe Material	Stainless Steel		
Pitot / Thermocouple ID	P-12		
Pitot Coefficient	0.84		
Nozzle ID	.270		
Avg Nozzle Dia (in)	.270		
Area of Stack (ft^2)	71.82		
Sample Time	64		
Total Traverse Pts	16		

Leak Checks

	Initial	Mid-Point	Final
Sample Train (ft^3)	.012		.004
Leak Check @ (in Hg)	11		6
Pitot good	yes / no	yes / no	yes / no
Orsat good	yes / no	yes / no	yes / no

Temp Check

	Pre-Test Set	Post-Test Set
Meter Box Temp		
Reference Temp		
Pass/Fail (+/- 2°)	Pass / Fail	Pass / Fail
Temp Change Response ?	yes / no	yes / no

K Factor

TRAVERSE POINT No.	SAMPLE TIME (min)	CLOCK TIME (plant time)	VELOCITY PRESSURE Delta P (in H2O)	ORIFICE PRESSURE Delta H (in H2O)	DRY GAS METER READING (ft³)	STACK TEMP (°F)	DGM INLET TEMP (°F)	DGM OUTLET TEMP (°F)	PROBE TEMP (°F)	FILTER BOX TEMP (°F)	IMPINGER EXIT TEMP (°F)	SAMPLE TRAIN VAC (in Hg)		COMMENTS
	0	1309			915.600									
B- 1	4		.56	1.36	922.2	349	79	78	266	269	50	4		
2	8		.65	1.59	924.9	350	83	79	269	254	48	4		
3	12		.62	1.51	927.7	350	84	79	267	253	47	4		
4	16		.65	1.59	930.4	351	86	80	264	253	49	4		
5	20		.60	1.47	933.1	351	87	80	265	254	48	4		
6	24		.63	1.54	935.9	352	88	81	262	253	52	4		
7	28		.61	1.50	938.7	351	90	82	264	255	50	4		
8	32	1341	.50	1.23	941.258	351	91	83	262	255	49	4		
A- 1	36	1347	.58	1.43	943.9	350	89	86	258	253	50	4		
2	40		.61	1.51	946.6	352	94	87	267	~~267~~ 255	50	4		
3	44		.60	1.49	949.2	352	96	90	269	254	50	4		
4	48		.54	1.34	951.9	352	97	89	270	255	51	5		
5	52		.58	1.44	954.6	353	99	90	270	255	52	5		
6	56		.56	1.40	957.3	351	100	91	267	256	53	5		
7	60		.53	1.33	960.0	351	101	95	267	256	53	5		
8	64	1419	.42	1.06	962.421	348	101	94	265	255	54	5		
			Avg Sqrt Delta P	Avg Delta H	Total Volume	Avg Ts		Avg Tm	Min/Max	Min/Max	Max Temp	Max Vac	Max Temp	
			.759 ✓	1.424 ✓	42.821 ✓	350.9 ✓		88.4 ✓	258/270	253/269	54	5		

WESTON MANAGERS DESIGNERS/CONSULTANTS

.578 ✓

Avg Sqrt Del H 1.192 ✓

Comments: BWS 24.9%
Iso 99.2%

54.71 lbs
235734 ACFM
113334 SCFM

63

92

ISOKINETIC FIELD DATA SHEET

			Stack Conditions Assumed	Stack Conditions Actual							
Client	Bowater				Meter Box ID	AO 20				K Factor	
W.O.#	0391.7.008.015				Meter Box Y	0.996					
Project ID	NA	% Moisture	24 ~~28~~		Meter Box Del H	1.808		**Leak Checks**	Initial	Mid-Point	Final
Mode/Source ID	NA	Impinger Vol (ml)		274	Probe ID / Length	K-12-C	12'	Sample Train (ft^3)	.010		.003
Samp. Loc. ID	stack	Silica gel (g)		11	Probe Material	Stainless Steel		Leak Check @ (in Hg)	12		6
Run No.ID	Four	CO2, % by Vol	14	12.7	Pitot / Thermocouple ID	P-12		Pitot good	yes / no	yes / no	yes / no
Test Method ID	M5	O2, % by Vol	5	7.0	Pitot Coefficient	0.84		Orsat good	yes / no	yes / no	yes / no
Filter No.	PA-1481	Temperature (°F)			Nozzle ID	.270		**Temp Check**	Pre-Test Set		Post-Test Set
Source/Location	No. 2 Recovery	Meter Temp (°F)			Avg Nozzle Dia (in)	.270		Meter Box Temp			
Sample Date	31-Mar-10	Static Press (in H_2O)	-0.4	-.33	Area of Stack (ft^2)	71.82		Reference Temp			
Baro. Press (in Hg)	29.41				Sample Time	64		Pass/Fail (+/- 2°)	Pass / Fail		Pass / Fail
Operator	LW/ RG	Ambient Temp (°F)			Total Traverse Pts	16		Temp Change Response ?	yes / no		yes / no

TRAVERSE POINT NO.	SAMPLE TIME (min)	CLOCK TIME (plant time)	VELOCITY PRESSURE Delta P (in H2O)	ORIFICE PRESSURE Delta H (in H2O)	DRY GAS METER READING (ft³)	STACK TEMP (°F)	DGM INLET TEMP (°F)	DGM OUTLET TEMP (°F)	PROBE TEMP (°F)	FILTER BOX TEMP (°F)	IMPINGER EXIT TEMP (°F)	SAMPLE TRAIN VAC (in Hg)		COMMENTS
	0	1516			963.600									
1	4		.51	1.28	966.7	353	95	93	259	253	56	4		
2	8		.59	1.49	968.9	354	97	96	268	254	54	4		
3	12		.57	1.43	971.6	354	96	93	261	256	55	4		
4	16		.60	1.51	974.5	353	96	93	263	255	54	4		
5	20		.59	1.49	977.1	352	97	93	265	256	54	4		
6	24		.62	1.57	979.8	351	98	93	269	256	54	4		
7	28		.61	1.54	982.5	351	99	94	262	255	55	4		
8	32	1548	.53	1.34	985.319	350	100	94	262	257	54	4		
1	36	1555	.47	1.19	987.7	349	97	97	258	248	57	4		
2	40		.57	1.44	990.3	352	100	96	258	244	54	4		
3	44		.63	1.59	993.1	352	99	96	258	244	54	4		
4	48		.62	1.57	995.9	352	99	96	257	242	54	4		
5	52		.61	1.54	998.7	351	99	95	257	244	54	5		
6	56		.61	1.54	1001.5	351	99	95	261	244	55	5		
7	60		.61	1.55	1004.4	350	99	95	261	244	55	5		
8	64	1627	.55	1.39	1007.239	350	98	95	261	244	55	5		
			Avg Sqrt Delta P .761 ✓	Avg Delta H 1.466 ✓	Total Volume 43.639 ✓	Avg Ts 351.6 ✓		Avg Tm 96.3 ✓	Min/Max	Min/Max	Max Temp	Max Vac 5	Max Temp	

WESTON MANAGERS DESIGNERS/CONSULTANTS

.581 ✓

Avg Sqrt Del H 1.210 ✓

Comments: BDS 24.81%
Iso 100.96%

54.94 FPS
236747 ACFM
113706 SCFM

✓ gB

SAMPLE RECOVERY FIELD DATA

Client	Bowater	W.O. #	03917.008.015
Location/Plant	Catawba, SC	Source & Location	No. 2 Recovery

Run No. ONE Sample Date 31MAR10 Recovery Date 31MAR10

Sample I.D. DA-1478 Analyst RRJ Filter Number DA 1478

	Impinger									
	1	2	3	4	5	6	7	Imp.Total	8	Total
Contents	Di H20	Di H20	Empty	Silica Gel						
Final	328	140	0	314.2						
Initial	100	100	0	305.0						
Gain	228	40	0	9.2				268		277.2

Impinger Color ✓ Labeled? Y

Silica Gel Condition ✓ Sealed? Y

Run No. TWO Sample Date 31MAR10 Recovery Date 31MAR10

Sample I.D. DA-1479 Analyst RRJ Filter Number DA-1479

	Impinger									
	1	2	3	4	5	6	7	Imp.Total	8	Total
Contents	Di H20	Di H20	Empty	Silica Gel						
Final	308	158	0	353.7						
Initial	100	100	0	344.7						
Gain	208	58	0	9.0				266		275.0

Impinger Color ✓ Labeled? Y

Silica Gel Condition ✓ Sealed? Y

Run No. THREE Sample Date 31MAR10 Recovery Date 31MAR10

Sample I.D. DA-1480 Analyst RRJ Filter Number DA-1480

	Impinger									
	1	2	3	4	5	6	7	Imp.Total	8	Total
Contents	Di H20	Di H20	Empty	Silica Gel						
Final	330	140	0	356.7						
Initial	100	100	0	345.9						
Gain	230	40	0	10.8				270		280.8

Impinger Color ✓ Labeled? Y

Silica Gel Condition ✓ Sealed? Y

Check COC for Sample IDs of Media Blanks

WESTON MANAGERS DESIGNERS/CONSULTANTS

SAMPLE RECOVERY FIELD DATA

Client	Bowater	W.O. #	03917.008.015
Location/Plant	Catawba, SC	Source & Location	No. 2 Recovery

Run No. Four Sample Date 31 MAR 10 Recovery Date 31 MAR 10

Sample I.D. PA-1481 Analyst RBD Filter Number PA-1481

	Impinger									
	1	2	3	4	5	6	7	Imp.Total	8	Total
Contents	Di H20	Di H20	Empty	Silica Gel						
Final	324	150	0	324.6						
Initial	100	100	0	313.6						
Gain	224	50	0	11.0				274		285.0

Impinger Color ✓ Labeled? Y

Silica Gel Condition ✓ Sealed? Y

Run No. ___ Sample Date ___ Recovery Date ___

Sample I.D. ___ Analyst ___ Filter Number ___

	Impinger									
	1	2	3	4	5	6	7	Imp.Total	8	Total
Contents	Di H20	Di H20	Empty	Silica Gel						
Final										
Initial	100	100								
Gain										

Impinger Color ___ Labeled? ___

Silica Gel Condition ___ Sealed? ___

Run No. ___ Sample Date ___ Recovery Date ___

Sample I.D. ___ Analyst ___ Filter Number ___

	Impinger									
	1	2	3	4	5	6	7	Imp.Total	8	Total
Contents	Di H20	Di H20	Empty	Silica Gel						
Final										
Initial	100	100								
Gain										

Impinger Color ___ Labeled? ___

Silica Gel Condition ___ Sealed? ___

Check COC for Sample IDs of Media Blanks

WESTON MANAGERS DESIGNERS/CONSULTANTS

Sample and Velocity Traverse Point Data Sheet - Method 1

Client: Bowater
Loaction/Plant: Catawba, SC
Source: No. 2 Recovery

Operator: TS
Date: 8/21/2010
W.O. Number: 03917.008-015

Duct Type	☒ Circular	☐ Rectangular Duct	Indicate appropriate type
Traverse Type	☒ Particulate Traverse	☐ Velocity Traverse	

Distance from far wall to outside of port (in.) = C	126.8
Port Depth (in.) = D	12.0
Depth of Duct, diameter (in.) = C-D	114.75
Area of Duct (ft^2)	71.82
Total Traverse Points	16
Total Traverse Points per Port	8

Rectangular Ducts Only	
Width of Duct, rectangular duct only (in.)	
Total Ports (rectangular duct only)	

Flow Disturbances	
Upstream - A (ft)	50
Downstream - B (ft)	58
Upstream - A (duct diameters)	5.23
Downstream - B (duct diameters)	6.07

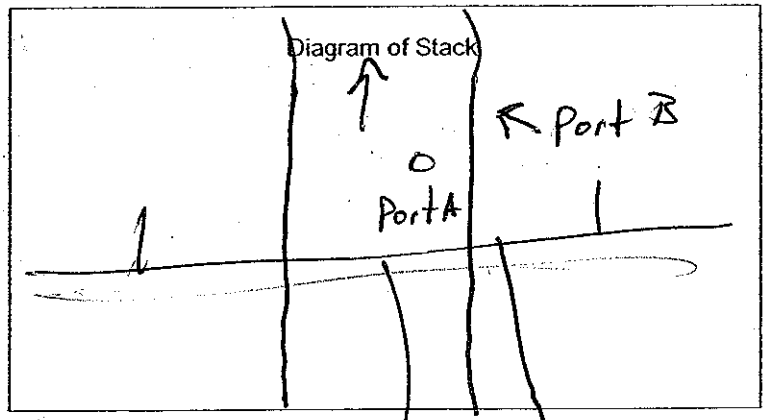

Traverse Point Locations

Traverse Point	% of Duct	Distance from Inside Duct Wall (in)	Distance from Outside of Port (in)
1	3.2	~~3.5~~ 3.7	15.7
2	10.5	~~12.0~~ 12	24.0
3	19.4	~~22.5~~ 22.3	34.3
4	32.3	37.1	49.1
5	67.7	77.7	89.7
6	80.6	92.5	104.5
7	89.5	102.7	114.7
8	96.8	111.1	123.1
9			
10			
11			
12			

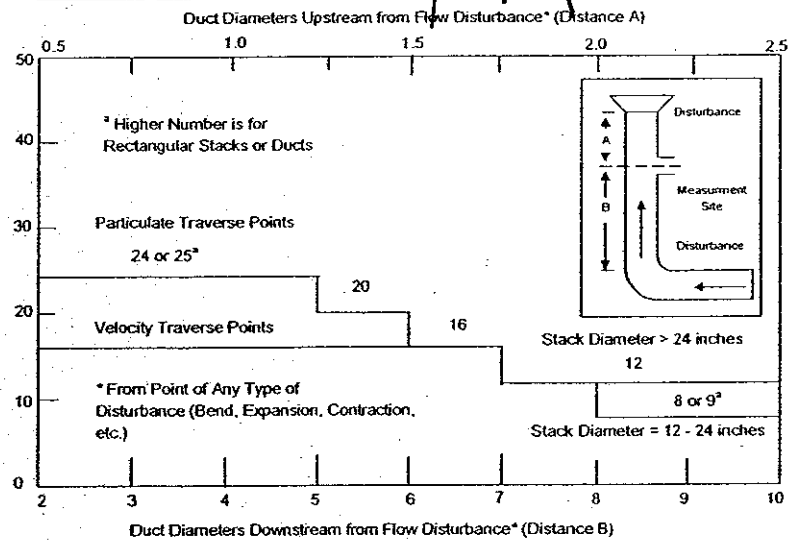

Equivalent Diameter = (2*L*W)/(L+W)

Traverse Point Location Percent of Stack -Circular

Traverse Point Location	Number of Traverse Points: 1	2	3	4	5	6	7	8	9	10	11	12
1		14.6		6.7		4.4		3.2		2.6		2.1
2		85.4		25		14.6		10.5		8.2		6.7
3				75		29.6		19.4		14.6		11.8
4				93.3		70.4		32.3		22.6		17.7
5						85.4		67.7		34.2		25
6						95.6		80.6		65.8		35.6
7								89.5		77.4		64.4
8								96.8		85.4		75
9										91.8		82.3
10										97.4		88.2
11												93.3
12												97.9

Traverse Point Location Percent of Stack -Rectangular

Traverse Point Location	Number of Traverse Points: 1	2	3	4	5	6	7	8	9	10	11	12
1		25.0	16.7	12.5	10.0	8.3	7.1	6.3	5.6	5.0	4.5	4.2
2		75.0	50.0	37.5	30.0	25.0	21.4	18.8	16.7	15.0	13.6	12.5
3			83.3	62.5	50.0	41.7	35.7	31.3	27.8	25.0	22.7	20.8
4				87.5	70.0	58.3	50.0	43.8	38.9	35.0	31.8	29.2
5					90.0	75.0	64.3	56.3	50.0	45.0	40.9	37.5
6						91.7	78.6	68.8	61.1	55.0	50.0	45.8
7							92.9	81.3	72.2	65.0	59.1	54.2
8								93.8	83.3	75.0	68.2	62.5
9									94.4	85.0	77.3	70.8
10										95.0	86.4	79.2
11											95.5	87.5
12												95.8

Rectangular Stack Points & Matrix
9 - 3 x 3
12 - 4 x 3
16 - 4 x 4
20 - 5 x 4
25 - 5 x 5
30 - 6 x 5
36 - 6 x 6
42 - 7 x 6
49 - 7 x 7

WESTON MANAGERS DESIGNERS/CONSULTANTS

Copyright Roy F Weston Inc Oct 1998PV

RUN DATA

Number 1

Client: **Bowater**
Location: **Catawba, SC**
Source: **No. 2 Recovery**

Calibration **1**

Project Number: **03917.008.015**
Operator: **T. Simpkins**
Date: **31 Mar 2010**

Time	O_2 mv	O_2 %	CO_2 mv	CO_2 %
M-5 Run 1				
11:19:42	288	7.2	151	12.3
11:19:57	289	7.2	152	12.4
11:20:12	288	7.2	153	12.5
11:20:27	288	7.2	153	12.5
11:20:42	288	7.2	151	12.3
11:20:57	288	7.2	151	12.3
11:21:12	287	7.2	150	12.2
11:21:27	288	7.2	151	12.3
Avgs	**288**	**7.2**	**152**	**12.4**

RUN DATA

Number 2

Client: **Bowater**
Location: **Catawba, SC**
Source: **No. 2 Recovery**

Calibration **1**

Project Number: **03917.008.015**
Operator: **T. Simpkins**
Date: **31 Mar 2010**

Time	O_2 mv	O_2 %	CO_2 mv	CO_2 %
M-5 Run 2				
13:12:28	284	7.1	152	12.4
13:12:43	285	7.1	152	12.4
13:12:58	285	7.1	152	12.4
13:13:13	286	7.2	152	12.4
13:13:28	288	7.2	151	12.3
13:13:43	288	7.2	151	12.3
13:13:58	288	7.2	151	12.3
13:14:13	289	7.2	153	12.5
Avgs	**287**	**7.2**	**152**	**12.4**

RUN DATA

Number 3

Client: **Bowater**
Location: **Catawba, SC**
Source: **No. 2 Recovery**

Calibration **1**

Project Number: **03917.008.015**
Operator: **T. Simpkins**
Date: **31 Mar 2010**

Time	O_2 mv	O_2 %	CO_2 mv	CO_2 %
	M-5 Run 3			
14:51:54	285	7.1	151	12.3
14:52:09	286	7.2	153	12.5
14:52:24	286	7.2	154	12.6
14:52:39	286	7.2	153	12.5
14:52:54	286	7.2	152	12.4
14:53:09	286	7.2	151	12.3
14:53:24	286	7.2	151	12.3
14:53:39	287	7.2	151	12.3
Avgs	**286**	**7.2**	**152**	**12.4**

RUN DATA

Number 4

Client: **Bowater**
Location: **Catawba, SC**
Source: **No. 2 Recovery**

Calibration **1**

Project Number: **03917.008.015**
Operator: **T. Simpkins**
Date: **31 Mar 2010**

Time	O_2 mv	O_2 %	CO_2 mv	CO_2 %
	M-5 Run 4			
17:18:02	280	7.0	155	12.7
17:18:17	280	7.0	155	12.7
17:18:32	280	7.0	155	12.7
17:18:47	280	7.0	155	12.7
17:19:02	280	7.0	154	12.6
17:19:17	280	7.0	155	12.7
17:19:32	280	7.0	155	12.7
17:19:47	281	7.0	156	12.8
Avgs	**280**	**7.0**	**155**	**12.7**

CALIBRATION DATA

Number 1

Client: **Bowater**
Location: **Catawba, SC**
Source: **No. 2 Recovery**

Project Number: **03917.008.015**
Operator: **T. Simpkins**
Date: **31 Mar 2010**

Start Time: 10:33

O_2
Method: EPA 3A
Calibration Type: Linear Regression

Calibration Results

%	Cylinder ID	Result, mv
Zero	-	11
10.2	CC42605	401
20.2	XC025060B	788

Curve Coefficients

Slope	Intercept	Corr. Coeff.
38.46	10	>0.9999

CO_2
Method: EPA 3A
Calibration Type: Linear Regression

Calibration Results

%	Cylinder ID	Result, mv
Zero	-	18
10.2	CC42605	128
20.1	XC025060B	234

Curve Coefficients

Slope	Intercept	Corr. Coeff.
10.77	18	>0.9999

/98

CALIBRATION ERROR DATA

Number 1

Client: **Bowater**
Location: **Catawba, SC**
Source: **No. 2 Recovery**

Calibration **1**

Project Number: **03917.008.015**
Operator: **T. Simpkins**
Date: **31 Mar 2010**

Start Time: 10:33

O_2
Method: EPA 3A
Span Conc. 20.2 %
Slope 38.46 **Intercept** 10.2

Standard %	Response mv	Result %	Difference %	Error %	Status
Zero	11	0.0	0.0	0.0	Pass ✓
10.2	401	10.2	0.0	0.0	Pass ✓
20.2	788	20.2	0.0	0.0	Pass ✓

CO_2
Method: EPA 3A
Span Conc. 20.1 %
Slope 10.77 **Intercept** 18.1

Standard %	Response mv	Result %	Difference %	Error %	Status
Zero	18	-0.0	-0.0	-0.0	Pass ✓
10.2	128	10.2	0.0	0.0	Pass ✓
20.0	234	20.0	0.0	0.0	Pass ✓

✓ gB

METHODS AND ANALYZERS

Client: **Bowater**
Location: **Catawba, SC**
Source: **No. 2 Recovery**

Project Number: **03917.008.015**
Operator: **T. Simpkins**
Date: **31 Mar 2010**

File: C:\Data\Bowater- Catawba, SC\2010 Compliance CEM files\No. 2 recovery bag samples.cem
Computer: WSAUB60 **Trailer:** 261
Analog Input Device: Keithley KPCMCIA 16AI

Channel 1

Analyte	**O_2**
Method	**EPA 3A**, Using Bias
Analyzer Make, Model & Serial No.	**Servomex 1440; SN 0144001/4303**
Full-Scale Output, mv	**1000**
Analyzer Range, %	**25.0**
Span Concentration, %	**20.2**

Channel 2

Analyte	**CO_2**
Method	**EPA 3A**, Using Bias
Analyzer Make, Model & Serial No.	**Servomex 1440; SN 0144001/4303**
Full-Scale Output, mv	**1000**
Analyzer Range, %	**25.0**
Span Concentration, %	**20.1**

TOTAL REDUCED SULFUR

EMISSION CALCULATIONS

	Run 1	Run 2	Run 3	Mean
Date	**3/31/2010**	**3/31/2010**	**3/31/2010**	---
Time Began	**947**	**1156**	**1357**	---
Time Ended	**1117**	**1326**	**1527**	---
% Oxygen	7.1	7.1	7.1	7.1
Oxygen Reference Concentration, %	8.0	8.0	8.0	8.0
Total Reduced Sulfur MW= 34.08				
Concentration, ppm	2.86	3.02	3.52	3.13
Concentration, ppm @8%O2	2.67	2.82	3.29	2.93

RUN SUMMARY

Number 1

Client:	**Bowater**	Project Number:	**03917.008.015**
Location:	**Catawba, SC**	Operator:	**T. Simpkins**
Source:	**No. 2 Recovery**	Date:	**31 Mar 2010**
Method:	**16**	**Calibration Number** 1	

Start Time 09:47 **End Time** 11:17

Average Measured TRS Conc.	2.82	**ppm**
Recovery No. 2	98.4	**%**
TRS Corrected for Recovery	2.86	**ppm**
Oxygen Conc.	7.1	**%**
Oxygen Reference Conc.	8.0	**%**
Oxygen Correction Factor	0.935	
TRS Corrected for Oxygen	2.68	**ppm**

WESTON SOLUTIONS

RUN SUMMARY

Number 2

Client:	**Bowater**	Project Number:	**03917.008.015**
Location:	**Catawba, SC**	Operator:	**T. Simpkins**
Source:	**No. 2 Recovery**	Date:	**31 Mar 2010**
Method:	**16** **Calibration Number** 1		

Start Time 11:56 **End Time** 13:26

Average Measured TRS Conc.	3.00	**ppm**
Recovery No. 3	99.3	**%**
TRS Corrected for Recovery	3.02	**ppm**
Oxygen Conc.	7.1	**%**
Oxygen Reference Conc.	8.0	**%**
Oxygen Correction Factor	0.935	
TRS Corrected for Oxygen	2.83	**ppm**

WESTON SOLUTIONS

RUN SUMMARY

Number 3

Client:	**Bowater**	Project Number:	**03917.008.015**
Location:	**Catawba, SC**	Operator:	**T. Simpkins**
Source:	**No. 2 Recovery**	Date:	**31 Mar 2010**
Method:	**16** **Calibration Number** 1		

Start Time 13:57 **End Time** 15:27

Average Measured TRS Conc.	3.45	**ppm**
Recovery No. 4	98.0	**%**
TRS Corrected for Recovery	3.52	**ppm**
Oxygen Conc.	7.1	**%**
Oxygen Reference Conc.	8.0	**%**
Oxygen Correction Factor	0.935	
TRS Corrected for Oxygen	3.30	**ppm**

WESTON SOLUTIONS

REDUCED SULFUR FIELD DATA

Run 1

Client: **Bowater**
Location: **Catawba, SC**
Source: **No. 2 Recovery**
Method: **16** **Calibration Number** 1

Project Number: **03917.008.015**
Operator: **T. Simpkins**
Date: **31 Mar 2010**

Time	H_2S		MeSH		DMS		DMDS		TRS
	area	ppm	area	ppm	area	ppm	area	ppm	ppm
09:47	12	1.34	<2	<1.16	12	1.20	15	0.75	4.05
09:50	16	1.50	<2	<1.16	3	0.70	30	1.00	4.20
09:53	<2	<0.65	<2	<1.16	7	0.94	<2	<0.33	0.94
09:56	7	1.09	<2	<1.16	4	0.74	26	0.95	3.73
09:59	19	1.62	<2	<1.16	5	0.87	13	0.70	3.90
10:02	11	1.28	<2	<1.16	16	1.36	28	0.98	4.60
10:05	7	1.10	<2	<1.16	<2	<0.58	39	1.12	3.33
10:08	2	0.70	<2	<1.16	<2	<0.58	9	0.59	1.89
10:11	11	1.32	<2	<1.16	7	0.96	36	1.08	4.45
10:14	11	1.31	<2	<1.16	12	1.20	8	0.58	3.67
10:17	<2	<0.65	<2	<1.16	7	0.94	5	0.48	1.91
10:20	10	1.23	<2	<1.16	10	1.09	19	0.84	3.99
10:23	12	1.35	<2	<1.16	9	1.06	16	0.77	3.95
10:26	4	0.84	<2	<1.16	<2	<0.58	18	0.82	2.47
10:29	4	0.83	<2	<1.16	7	0.95	14	0.73	3.25
10:32	3	0.74	<2	<1.16	<2	<0.58	6	0.52	1.78
10:35	2	0.71	<2	<1.16	<2	<0.58	<2	<0.33	0.71
10:38	3	0.75	<2	<1.16	5	0.84	11	0.66	2.91
10:41	3	0.75	<2	<1.16	9	1.06	<2	<0.33	1.81
10:44	7	1.08	<2	<1.16	<2	<0.58	<2	<0.33	1.08
10:47	<2	<0.65	<2	<1.16	35	1.85	<2	<0.33	1.85
10:50	3	0.78	<2	<1.16	11	1.18	20	0.84	3.64
10:53	13	1.41	<2	<1.16	6	0.88	10	0.64	3.56
10:56	<2	<0.65	<2	<1.16	<2	<0.58	27	0.96	1.92
10:59	<2	<0.65	<2	<1.16	<2	<0.58	17	0.78	1.57
11:02	12	1.36	<2	<1.16	<2	<0.58	17	0.78	2.93
11:05	18	1.58	<2	<1.16	5	0.83	21	0.86	4.14
11:08	7	1.08	<2	<1.16	<2	<0.58	18	0.82	2.72
11:11	4	0.90	<2	<1.16	10	1.11	17	0.80	3.61
11:14	<2	<0.65	<2	<1.16	<2	<0.58	<2	<0.33	-
Averages:		**0.89**		**-**		**0.66**		**0.63**	**2.82**

WESTON SOLUTIONS

REDUCED SULFUR FIELD DATA

Run 2

Client: **Bowater**
Location: **Catawba, SC**
Source: **No. 2 Recovery**
Method: **16** **Calibration Number** 1

Project Number: **03917.008.015**
Operator: **T. Simpkins**
Date: **31 Mar 2010**

Time	H_2S		MeSH		DMS		DMDS		TRS
	area	ppm	area	ppm	area	ppm	area	ppm	ppm
11:56	9	1.23	<2	<1.16	<2	<0.58	<2	<0.33	1.23
11:59	12	1.33	<2	<1.16	7	0.95	<2	<0.33	2.28
12:02	16	1.52	<2	<1.16	22	1.53	9	0.61	4.26
12:05	21	1.68	<2	<1.16	9	1.06	<2	<0.33	2.75
12:08	21	1.68	<2	<1.16	4	0.76	<2	<0.33	2.44
12:11	7	1.11	<2	<1.16	8	1.04	<2	<0.33	2.15
12:14	6	1.04	<2	<1.16	<2	<0.58	<2	<0.33	1.04
12:17	11	1.31	<2	<1.16	6	0.92	25	0.93	4.08
12:20	22	1.73	<2	<1.16	8	1.02	9	0.60	3.94
12:23	7	1.07	<2	<1.16	22	1.53	17	0.79	4.17
12:26	63	2.64	<2	<1.16	6	0.93	<2	<0.33	3.57
12:29	112	3.34	<2	<1.16	14	1.27	21	0.87	6.35
12:32	19	1.63	<2	<1.16	6	0.88	<2	<0.33	2.52
12:35	5	0.91	<2	<1.16	<2	<0.58	10	0.64	2.19
12:38	5	0.96	<2	<1.16	10	1.11	<2	<0.33	2.07
12:41	17	1.56	<2	<1.16	14	1.27	24	0.92	4.67
12:44	5	0.94	<2	<1.16	6	0.93	12	0.68	3.22
12:47	4	0.84	<2	<1.16	13	1.24	16	0.76	3.60
12:50	<2	<0.65	<2	<1.16	11	1.18	<2	<0.33	1.18
12:53	<2	<0.65	<2	<1.16	6	0.90	<2	<0.33	0.90
12:56	7	1.06	<2	<1.16	17	1.37	26	0.95	4.33
12:59	13	1.40	<2	<1.16	7	0.98	<2	<0.33	2.38
13:02	6	1.02	<2	<1.16	<2	<0.58	<2	<0.33	1.02
13:05	<2	<0.65	<2	<1.16	5	0.83	10	0.64	2.10
13:08	4	0.84	<2	<1.16	90	2.73	9	0.60	4.77
13:11	13	1.40	<2	<1.16	11	1.17	21	0.87	4.32
13:14	6	1.04	<2	<1.16	6	0.89	9	0.62	3.17
13:17	5	0.96	<2	<1.16	29	1.71	7	0.56	3.78
13:20	7	1.05	<2	<1.16	25	1.62	<2	<0.33	2.67
13:23	15	1.48	<2	<1.16	19	1.44	<2	<0.33	2.92
Averages:		**1.23**		**-**		**1.04**		**0.37**	**3.00**

WESTON SOLUTIONS

REDUCED SULFUR FIELD DATA

Run 3

Client: **Bowater**
Location: **Catawba, SC**
Source: **No. 2 Recovery**
Method: **16** **Calibration Number** 1

Project Number: **03917.008.015**
Operator: **T. Simpkins**
Date: **31 Mar 2010**

Time	H_2S		MeSH		DMS		DMDS		TRS
	area	ppm	area	ppm	area	ppm	area	ppm	ppm
13:57	5	0.94	6	1.74	4	0.80	<2	<0.33	3.48
14:00	3	0.80	15	2.57	<2	<0.58	28	0.97	5.31
14:03	17	1.55	<2	<1.16	<2	<0.58	<2	<0.33	1.55
14:06	17	1.54	17	2.71	9	1.05	20	0.84	6.97
14:09	3	0.78	<2	<1.16	16	1.34	<2	<0.33	2.12
14:12	6	0.99	<2	<1.16	7	0.96	12	0.69	3.33
14:15	<2	<0.65	<2	<1.16	<2	<0.58	15	0.76	1.52
14:18	17	1.54	17	2.72	280	4.34	8	0.57	9.75
14:21	3	0.75	<2	<1.16	10	1.13	<2	<0.33	1.88
14:24	11	1.28	11	2.26	<2	<0.58	13	0.71	4.96
14:27	<2	<0.65	<2	<1.16	58	2.29	11	0.65	3.59
14:30	13	1.39	<2	<1.16	8	1.02	32	1.03	4.47
14:33	9	1.18	<2	<1.16	6	0.90	14	0.72	3.52
14:36	723	7.14	<2	<1.16	<2	<0.58	<2	<0.33	7.14
14:39	102	3.21	<2	<1.16	3	0.66	9	0.61	5.10
14:42	13	1.41	<2	<1.16	<2	<0.58	<2	<0.33	1.41
14:45	6	1.05	8	2.02	14	1.27	17	0.79	5.91
14:48	3	0.76	<2	<1.16	26	1.65	12	0.70	3.80
14:51	5	0.94	<2	<1.16	15	1.31	10	0.62	3.50
14:54	10	1.27	<2	<1.16	26	1.64	<2	<0.33	2.91
14:57	5	0.90	<2	<1.16	<2	<0.58	24	0.92	2.75
15:00	2	0.71	<2	<1.16	<2	<0.58	<2	<0.33	0.71
15:03	6	1.03	3	1.37	<2	<0.58	<2	<0.33	2.40
15:06	4	0.88	8	1.99	<2	<0.58	4	0.43	3.72
15:09	4	0.84	7	1.91	<2	<0.58	<2	<0.33	2.75
15:12	10	1.26	10	2.23	<2	<0.58	5	0.49	4.47
15:15	<2	<0.65	<2	<1.16	<2	<0.58	<2	<0.33	-
15:18	3	0.74	4	1.59	<2	<0.58	<2	<0.33	2.34
15:21	10	1.24	<2	<1.16	<2	<0.58	6	0.52	2.28
15:24	<2	<0.65	<2	<1.16	<2	<0.58	<2	<0.33	-
Averages:		**1.20**		**0.77**		**0.68**		**0.40**	**3.45**

WESTON SOLUTIONS

RECOVERY DATA

Number 1

Client: **Bowater**
Location: **Catawba, SC**
Source: **No. 2 Recovery**
Method: **16**

Project Number: **03917.008.015**
Operator: **T. Simpkins**
Date: **31 Mar 2010**

Calibration Number 1 **Before Run** 1
Start Time 07:46 **End Time** 09:30

Recovery was run using H_2S

Recovery Gas to Probe, Time: 07:46

Peak Areas, mv-sec			Average	ppm
1003	1176	1184	1121	8.53

Recovery Gas to GC, Time: 08:26

Peak Areas, mv-sec			Average	ppm
1208	1206	1181	1198	8.77

Recovery 97.3%

WESTON SOLUTIONS

RECOVERY DATA

Number 2

Client: **Bowater**
Location: **Catawba, SC**
Source: **No. 2 Recovery**
Method: **16**

Project Number: **03917.008.015**
Operator: **T. Simpkins**
Date: **31 Mar 2010**

Calibration Number 1 **After Run** 1 **Before Run** 2
Start Time 11:24 **End Time** 11:55

Recovery was run using H_2S

Recovery Gas to Probe, Time: 11:24

Peak Areas, mv-sec			Average	ppm
1091	1124	1099	1105	8.48

Recovery Gas to GC, Time: 11:51

Peak Areas, mv-sec			Average	ppm
1180	1136	1133	1150	8.62

Recovery 98.4%

WESTON SOLUTIONS

RECOVERY DATA

Number 3

Client: **Bowater**
Location: **Catawba, SC**
Source: **No. 2 Recovery**
Method: **16**

Project Number: **03917.008.015**
Operator: **T. Simpkins**
Date: **31 Mar 2010**

Calibration Number 1 **After Run** 2 **Before Run** 3
Start Time 13:28 **End Time** 13:53

Recovery was run using H_2S

Recovery Gas to Probe, Time: 13:28

Peak Areas, mv-sec			Average	ppm
1085	1148	1119	1117	8.52

Recovery Gas to GC, Time: 13:49

Peak Areas, mv-sec			Average	ppm
1151	1151	1111	1138	8.58

Recovery 99.3%

WESTON SOLUTIONS

RECOVERY DATA

Number 4

Client: **Bowater**
Location: **Catawba, SC**
Source: **No. 2 Recovery**
Method: **16**

Project Number: **03917.008.015**
Operator: **T. Simpkins**
Date: **31 Mar 2010**

Calibration Number 1 **After Run** 3 **Before Run** 4
Start Time 15:31 **End Time** 16:08

Recovery was run using H_2S

Recovery Gas to Probe, Time: 15:31

Peak Areas, mv-sec			Average	ppm
1062	1069	1058	1063	8.35

Recovery Gas to GC, Time: 16:01

Peak Areas, mv-sec			Average	ppm
1117	1116	1119	1117	8.52

Recovery 98.0%

WESTON SOLUTIONS

CALIBRATION DATA

Number 1

Client: **Bowater**
Location: **Catawba, SC**
Source: **No. 2 Recovery**
Method: **16**

Project Number: **03917.008.015**
Operator: **T. Simpkins**
Date: **31 Mar 2010**

Ambient Temp 70°F **Baro. Press.** 29.40 in. Hg

Compound	**H_2S**	**MeSH**	**DMS**	**DMDS**
Perm. Device ID	T-35258	33-35269	19-35275	89-35285
Perm. Rate, nL/min	445	382	294	216
Ret. Time, sec	17.0	31.0	73.0	129.0
1 Flow 85.7 **mL/min**	**5.19** ppm	**4.46** ppm	**3.43** ppm	**2.52** ppm
Time: 07:25		**Peak Areas, mv-sec**		
	332	60	150	273
	331	57	162	282
	327	61	158	271
Average Area	**330**	**59**	**157**	**275**
2 Flow 31.2 **mL/min**	**14.2** ppm	**12.2** ppm	**9.41** ppm	**6.92** ppm
Time: 07:11		**Peak Areas, mv-sec**		
	3781	642	1837	3020
	3993	685	1840	3116
	4091	698	1864	3140
Average Area	**3955**	**675**	**1847**	**3092**
3 Flow 17.4 **mL/min**	**25.6** ppm	**21.9** ppm	**16.9** ppm	**12.4** ppm
Time: 06:51		**Peak Areas, mv-sec**		
	16380	3273	7645	12556
	16701	3312	7764	12657
	16787	3274	7899	13050
Average Area	**16623**	**3286**	**7769**	**12754**

WESTON SOLUTIONS

CALIBRATION SUMMARY

Number 1

Client: **Bowater**
Location: **Catawba, SC**
Source: **No. 2 Recovery**
Method: **16**

Project Number: **03917.008.015**
Operator: **T. Simpkins**
Date: **31 Mar 2010**

H_2S	1	2	3		
Time	07:25	07:11	06:51		
Conc.	5.19	14.2	25.6		
Response	330	3955	16623		
Calc. Conc.	5.19	14.2	25.6		
% Error	+0.0	-0.0	+0.0		
Calibration Curve:	Slope	Intercept	Corr Coeff	Min Area	Det Lim
	2.4584	0.7607	>0.9999	2	0.65

MeSH	1	2	3		
Time	07:25	07:11	06:51		
Conc.	4.46	12.2	21.9		
Response	59	675	3286		
Calc. Conc.	4.50	11.9	22.4		
% Error	+1.1	-2.9	+1.9		
Calibration Curve:	Slope	Intercept	Corr Coeff	Min Area	Det Lim
	2.5047	0.1369	0.9995	2	1.16

DMS	1	2	3		
Time	07:25	07:11	06:51		
Conc.	3.43	9.41	16.9		
Response	157	1847	7769		
Calc. Conc.	3.43	9.39	16.9		
% Error	+0.1	-0.2	+0.1		
Calibration Curve:	Slope	Intercept	Corr Coeff	Min Area	Det Lim
	2.4475	0.8854	>0.9999	2	0.58

DMDS	1	2	3		
Time	07:25	07:11	06:51		
Conc.	2.52	6.92	12.4		
Response	275	3092	12754		
Calc. Conc.	2.52	6.90	12.4		
% Error	+0.1	-0.3	+0.2		
Calibration Curve:	Slope	Intercept	Corr Coeff	Min Area	Det Lim
	2.4045	1.4739	>0.9999	2	0.33

WESTON SOLUTIONS

CALIBRATION DATA

Number 2

Client: **Bowater**
Location: **Catawba, SC**
Source: **No. 2 Recovery**
Method: **16**

Project Number: **03917.008.015**
Operator: **T. Simpkins**
Date: **31 Mar 2010**

Ambient Temp 70°F **Baro. Press.** 29.40 in. Hg

Compound	**H_2S**	**MeSH**	**DMS**	**DMDS**
Perm. Device ID	T-35258	33-35269	19-35275	89-35285
Perm. Rate, nL/min	445	382	294	216
Ret. Time, sec	17.0	31.0	73.0	129.0
1 Flow 75.0 **mL/min**	**5.93** ppm	**5.09** ppm	**3.91** ppm	**2.88** ppm
Time: 17:18		**Peak Areas, mv-sec**		
	505	96	165	357
	502	94	159	355
	503	102	164	354
Average Area	**503**	**97**	**163**	**355**
2 Flow 28.5 **mL/min**	**15.6** ppm	**13.4** ppm	**10.3** ppm	**7.57** ppm
Time: 16:39		**Peak Areas, mv-sec**		
	4455	673	1848	3605
	5049	717	1858	3612
	4889	702	1843	3617
Average Area	**4798**	**697**	**1850**	**3611**
3 Flow 17.4 **mL/min**	**25.6** ppm	**21.9** ppm	**16.9** ppm	**12.4** ppm
Time: 16:09		**Peak Areas, mv-sec**		
	15784	1574	8533	12680
	16302	1582	8501	13119
	16229	1511	8550	13203
Average Area	**16105**	**1556**	**8528**	**13000**

WESTON SOLUTIONS

CALIBRATION SUMMARY

Number 2

Client: **Bowater**
Location: **Catawba, SC**
Source: **No. 2 Recovery**
Method: **16**

Project Number: **03917.008.015**
Operator: **T. Simpkins**
Date: **31 Mar 2010**

H_2S	1	2	3		
Time	17:18	16:39	16:09		
Conc.	5.93	15.6	25.6		
Response	503	4798	16105		
Calc. Conc.	5.95	15.4	25.7		
% Error	+0.4	-1.1	+0.7		
Calibration Curve:	Slope	Intercept	Corr Coeff	Min Area	Det Lim
	2.3663	0.8692	0.9999	2	0.58

MeSH	1	2	3		
Time	17:18	16:39	16:09		
Conc.	5.09	13.4	21.9		
Response	97	697	1556		
Calc. Conc.	5.01	14.0	21.3		
% Error	-1.5	+4.6	-2.9		
Calibration Curve:	Slope	Intercept	Corr Coeff	Min Area	Det Lim
	1.9170	0.6454	0.9986	2	0.66

DMS	1	2	3		
Time	17:18	16:39	16:09		
Conc.	3.91	10.3	16.9		
Response	163	1850	8528		
Calc. Conc.	3.98	9.84	17.4		
% Error	+1.6	-4.5	+3.1		
Calibration Curve:	Slope	Intercept	Corr Coeff	Min Area	Det Lim
	2.6823	0.6036	0.9985	2	0.77

DMDS	1	2	3		
Time	17:18	16:39	16:09		
Conc.	2.88	7.57	12.4		
Response	355	3611	13000		
Calc. Conc.	2.89	7.45	12.5		
% Error	+0.6	-1.7	+1.1		
Calibration Curve:	Slope	Intercept	Corr Coeff	Min Area	Det Lim
	2.4543	1.4178	0.9998	2	0.35

WESTON SOLUTIONS

PERMEATION RATE CALCULATIONS

Client:	**Bowater**	Project Number:	**03917.008.015**
Location:	**Catawba, SC**	Operator:	**T. Simpkins**
Source:	**No. 2 Recovery**	Date:	**31 Mar 2010**
Method:	**16**		

To calculate the permeation rate in volume units:

$$PR_{nl} = PR_{ng} \times (V_{mol} / W_{mol}) \times [(460° + T_a) / T_s] \times (P_s / P_a)$$

Where:

- PR_{nl} = Permeation Rate, nL/min
- PR_{ng} = Permeation Rate, ng/min
- V_{mol} = Molar Volume of any gas @32°F & 29.92 mm Hg = 22.4 L/mole
- W_{mol} = Molecular Weight of compound
- T_a = Ambient Temperature, °F
- T_s = Standard Temperature = 492°R
- P_s = Standard Pressure = 29.92 in Hg
- P_a = Ambient Pressure, in Hg

To calculate concentration: $C = PR_{nl} / F_d$

Where:

- C = Concentration, ppmv
- PR_{nl} = Permeation Rate, nL/min
- F_d = Diluent Flow Rate, mL/min

T_a = 70°F P_a= 29.40

H_2S: Device T-35258 PR_{ng} = 617 ng/min W_{mol} = 34.08

PR_{nl} = 617 x (22.4 / 34.08) x [(460 + 70) / 492] x (29.92 / 29.40)

= **445** nL/min

MeSH: Device 33-35269 PR_{ng} = 748 ng/min W_{mol} = 48.11

PR_{nl} = 748 x (22.4 / 48.11) x [(460 + 70) / 492] x (29.92 / 29.40)

= **382** nL/min

DMS: Device 19-35275 PR_{ng} = 743 ng/min W_{mol} = 62.14

PR_{nl} = 743 x (22.4 / 62.14) x [(460 + 70) / 492] x (29.92 / 29.40)

= **294** nL/min

DMDS: Device 89-35285 PR_{ng} = 828 ng/min W_{mol} = 94.20

PR_{nl} = 828 x (22.4 / 94.20) x [(460 + 70) / 492] x (29.92 / 29.40)

= **216** nL/min

	H_2S	MeSH	DMS	DMDS
Permeation Device ID	T-35258	33-35269	19-35275	89-35285
Permeation Rate, ng/min	617	748	743	828
Permeation Rate, nL/min	445	382	294	216

WESTON SOLUTIONS

INSTRUMENT DATA

Client: **Bowater**
Location: **Catawba, SC**
Source: **No. 2 Recovery**
Method: **16**

Project Number: **03917.008.015**
Operator: **T. Simpkins**
Date: **31 Mar 2010**

File: C:\DATA\Bowater- Catawba, SC\Compliance 2010\No. 2 RB 033110.trw
Computer: WSAUB61 **Trailer:** 261

Analog Input Device Keithley KPCMCIA 16AI Card

Sampling Rate $^{50}/_{1024}$ sec **Data Interval** 0.5 sec

Gas Chromatograph Shimadzu GC-8a

Gases	Pressure psig	Flow mL/min
H_2	30	50
Air	30	60
Carrier	50	30

Temperatures	
Column	100°C
Detector	120°C

Sample Loop	5"
Column 1	Packed
Column 2	none
Detector Range	10

Injection Cycle

Length 180 sec

Valve Timing	Time, sec
Inject	0
Load/Backflush	90

Injection is triggered by **internal** clock

Integration Parameters

Signal threshold 0.67 mv
Peak detection window ±15 sec
Minimum peak area 2 mv-sec **Minimum peak height** 1 mv above baseline

Dynacalibrator

Chamber Temperature 50.0°C
Ambient Temperature 70°F
Barometric Pressure 29.40 in. Hg

WESTON SOLUTIONS

RUN DATA

Number 1

Client: **Bowater**
Location: **Catawba, SC**
Source: **No. 2 Recovery**

Calibration **1**

Project Number: **03917.008.015**
Operator: **T. Simpkins**
Date: **31 Mar 2010**

Time	O_2 mv	O_2 %	CO_2 mv	CO_2 %
TRS Run 1				
11:25:57	282	7.1	155	12.7
11:26:12	281	7.0	153	12.5
11:26:27	281	7.0	153	12.5
11:26:42	281	7.0	152	12.4
11:26:57	282	7.1	155	12.7
11:27:12	282	7.1	155	12.7
11:27:27	282	7.1	155	12.7
11:27:42	282	7.1	156	12.8
Avgs	**282**	**7.1**	**154**	**12.6**

RUN DATA

Number 2

Client: **Bowater**
Location: **Catawba, SC**
Source: **No. 2 Recovery**

Calibration **1**

Project Number: **03917.008.015**
Operator: **T. Simpkins**
Date: **31 Mar 2010**

Time	O_2 mv	O_2 %	CO_2 mv	CO_2 %
TRS Run 2				
13:26:40	282	7.1	154	12.6
13:26:55	282	7.1	154	12.6
13:27:10	282	7.1	152	12.4
13:27:25	282	7.1	152	12.4
13:27:40	282	7.1	152	12.4
13:27:55	282	7.1	152	12.4
13:28:10	282	7.1	152	12.4
13:28:25	283	7.1	152	12.4
Avgs	**282**	**7.1**	**153**	**12.5**

RUN DATA

Number 3

Client: **Bowater**
Location: **Catawba, SC**
Source: **No. 2 Recovery**

Calibration **1**

Project Number: **03917.008.015**
Operator: **T. Simpkins**
Date: **31 Mar 2010**

Time	O_2 mv	O_2 %	CO_2 mv	CO_2 %
TRS- Run 3				
15:31:39	285	7.1	154	12.6
15:31:54	285	7.1	153	12.5
15:32:09	284	7.1	152	12.4
15:32:24	285	7.1	152	12.4
15:32:39	285	7.1	152	12.4
15:32:54	285	7.1	152	12.4
15:33:09	285	7.1	152	12.4
15:33:24	285	7.1	152	12.4
Avgs	**285**	**7.1**	**152**	**12.4**

CALIBRATION DATA

Number 1

Client: **Bowater**
Location: **Catawba, SC**
Source: **No. 2 Recovery**

Project Number: **03917.008.015**
Operator: **T. Simpkins**
Date: **31 Mar 2010**

Start Time: 10:33

O_2
Method: EPA 3A
Calibration Type: Linear Regression

Calibration Results

%	Cylinder ID	Result, mv
Zero	-	11
10.2	CC42605	401
20.2	XC025060B	788

Curve Coefficients

Slope	Intercept	Corr. Coeff.
38.46	10	>0.9999

CO_2
Method: EPA 3A
Calibration Type: Linear Regression

Calibration Results

%	Cylinder ID	Result, mv
Zero	-	18
10.2	CC42605	128
20.1	XC025060B	234

Curve Coefficients

Slope	Intercept	Corr. Coeff.
10.77	18	>0.9999

✓

CALIBRATION ERROR DATA

Number 1

Client: **Bowater**
Location: **Catawba, SC**
Source: **No. 2 Recovery**

Calibration **1**

Project Number: **03917.008.015**
Operator: **T. Simpkins**
Date: **31 Mar 2010**

Start Time: 10:33

O_2
Method: EPA 3A
Span Conc. 20.2 %
Slope 38.46 **Intercept** 10.2

Standard %	Response mv	Result %	Difference %	Error %	Status
Zero	11	0.0	0.0	0.0	Pass ✓
10.2	401	10.2	0.0	0.0	Pass ✓
20.2	788	20.2	0.0	0.0	Pass ✓

CO_2
Method: EPA 3A
Span Conc. 20.1 %
Slope 10.77 **Intercept** 18.1

Standard %	Response mv	Result %	Difference %	Error %	Status
Zero	18	-0.0	-0.0	-0.0	Pass ✓
10.2	128	10.2	0.0	0.0	Pass ✓
20.0	234	20.0	0.0	0.0	Pass ✓

✓ op

METHODS AND ANALYZERS

Client: **Bowater**
Location: **Catawba, SC**
Source: **No. 2 Recovery**

Project Number: **03917.008.015**
Operator: **T. Simpkins**
Date: **31 Mar 2010**

File: C:\Data\Bowater- Catawba, SC\2010 Compliance CEM files\No. 2 recovery bag samples.cem
Computer: WSAUB60 **Trailer:** 261
Analog Input Device: Keithley KPCMCIA 16AI

Channel 1

Analyte	**O_2**
Method	**EPA 3A**, Using Bias
Analyzer Make, Model & Serial No.	**Servomex 1440; SN 0144001/4303**
Full-Scale Output, mv	**1000**
Analyzer Range, %	**25.0**
Span Concentration, %	**20.2**

Channel 2

Analyte	**CO_2**
Method	**EPA 3A**, Using Bias
Analyzer Make, Model & Serial No.	**Servomex 1440; SN 0144001/4303**
Full-Scale Output, mv	**1000**
Analyzer Range, %	**25.0**
Span Concentration, %	**20.1**

APPENDIX G
FIELD DATA –
NO. 3 RECOVERY FURNACE

PARTICULATE MATTER

Bowater
Catawba, SC

03917.008.015
No. 3 Recovery Furnace

ISOKINETIC CALCULATIONS

Run Number		1	2	3	Mean
Date		4/7/2010	4/7/2010	4/7/2010	---
Time Began		1413	1541	1718	---
Time Ended		1516	1643	1822	---
INPUT DATA					
Sampling Time, min	(Theta)	60.0	60	60	60
Stack Diameter, in.	(Dia.)	127.00	127.00	127.00	127.00
Barometric Pressure, in. Hg	(Pb)	29.46	29.46	29.46	29.46
Static Pressure, in. H2O	(Pg)	-1.25	-1.25	-1.25	-1.25
Pitot Tube Coefficient	(Cp)	0.84	0.84	0.84	0.84
Meter Correction Factor	(Y)	0.9770	0.9770	0.9770	0.9770
Orifice Calibration Value	(Delta H@)	1.8830	1.8830	1.8830	1.8830
Nozzle Diameter, in.	(Dn)	0.215	0.215	0.215	0.215
Meter Volume, ft^3	(Vm)	38.959	39.077	38.365	38.800
Meter Temperature, °F	(Tm)	88.4	92.6	91.2	90.7
Meter Temperature, °R	(Tm-R)	548.4	552.6	551.2	550.7
Meter Orifice Pressure, in. H2O	(Delta H)	1.353	1.346	1.306	1.335
Ave Sq Rt Orifice Press, (in. H2O)^½	((Delta H)½)avg)	1.161	1.158	1.140	1.153
Volume H2O Collected, mL	(Vlc)	217.0	242.1	225.1	228.1
CO2 Concentration, %	(CO2)	13.1	13.4	13.3	13.3
O2 Concentration, %	(O2)	6.6	6.4	6.6	6.5
Ave Sq Rt Velo Head, (in. H2O)^½	((Delta P)½)avg)	1.147	1.128	1.126	1.134
Stack Temperature, °F	(Ts)	363.9	364.4	366.3	364.9
Stack Temperature, °R	(Ts-R)	823.9	824.4	826.3	824.9
Particulate Collected, g	(Mn)	0.0543	0.0497	0.0557	0.0532
CALCULATED DATA					
Nozzle Area, in^2	(An)	3.63E-02	3.63E-02	3.63E-02	0.04
Stack Area, ft^2	(As)	87.97	87.97	87.97	87.97
Stack Pressure, in. Hg	(Ps)	29.37	29.37	29.37	29.37
Meter Pressure, in. Hg	(Pm)	29.56	29.56	29.56	29.56
Standard Meter Volume, ft^3	(Vmstd)	36.191	36.024	35.454	35.890
Standard Water Volume, ft^3	(Vwstd)	10.214	11.396	10.595	10.735
Moisture Fraction (Measured)	(BWS)	0.220	0.240	0.230	0.230
Moisture Fraction (lower sat/meas)	(BWS)	0.220	0.240	0.230	0.230
Mol. Wt. of Dry Gas, lb/lb-mole	(Md)	30.36	30.40	30.39	30.38
Mol. Wt. of Stack Gas, lb/lb-mole	(Ms)	27.64	27.42	27.54	27.53
Average Stack Gas Velocity, ft/sec	(Vs)	82.98	81.96	81.73	82.22
Stack Gas Flow, actual, ft^3/min	(Qa)	438005	432600	431382	433996
Stack Gas Flow, Std , ft^3/min	(Qs)	214789	206517	208228	209845
Isokinetic Sampling Rate, %	(%I)	98.0	101.5	99.0	99.5
Particulate Conc @ Std Cond, gr/ft^3	(Cs)	0.023	0.021	0.024	0.023
Particulate Conc @ % O2, gr/ft^3 8	(Cs__)	0.021	0.019	0.022	0.021
Particulate Emission, lb/hr	(PMR)	42.615	37.676	43.259	41.18
Calibration check	(Yqa)	0.9797	0.9773	0.9789	0.979
Percent difference from Y					0.17%

✓ YB

ISOKINETIC FIELD DATA SHEET

EPA Method 5 - Particulate (Pulp & Paper)

Client	Bowater
W.O.#	03917.008.015
Project ID	NA
Mode/Source ID	
Samp. Loc. ID	Catawba, SC
Run No.ID	OPB
Test Method ID	M5
Date ID	NA
Source/Location	No. 3 Recovery
Sample Date	April 7, 2010
Baro. Press (in Hg)	29.46
Operator	RG/ LW

Stack Conditions

	Assumed	Actual
% Moisture	24	
Impinger Vol (ml)		208
Silica gel (g)		9.0
CO2, % by Vol	13.6	13.1
O2, % by Vol	6.1	6.6
Temperature (°F)	342	
Meter Temp (°F)	85	
Static Press (in H_2O)	-.95	-1.25
Ambient Temp (°F)		

Meter Box ID	AO 12
Meter Box Y	0.977
Meter Box Del H	1.883
Probe ID / Length	12C / 12'
Probe Material	ss
Pitot / Thermocouple ID	P12
Pitot Coefficient	0.84
Nozzle ID	.215
Avg Nozzle Dia (in)	.215
Area of Stack (ft²)	88.0
Sample Time	60
Total Traverse Pts	24

K Factor

Leak Checks	Initial	Mid-Point	Final
Sample Train (ft³)	.008		.003
Leak Check @ (in Hg)	15		10
Pitot good	yes / no	yes / no	yes / no
Orsat good	yes / no	yes / no	yes / no

Temp Check	Pre-Test Set	Post-Test Set
Meter Box Temp		
Reference Temp		
Pass/Fail (+/- 2°)	Pass / Fail	Pass / Fail
Temp Change Response ?	yes / no	yes / no

TRAVERSE POINT NO.	SAMPLE TIME (min)	CLOCK TIME (plant time)	VELOCITY PRESSURE Delta P (in H2O)	ORIFICE PRESSURE Delta H (in H2O)	DRY GAS METER READING (ft³)	STACK TEMP (°F)	DGM INLET TEMP (°F)	DGM OUTLET TEMP (°F)	PROBE TEMP (°F)	FILTER BOX TEMP (°F)	IMPINGER EXIT TEMP (°F)	SAMPLE TRAIN VAC (in Hg)		COMMENTS
	0	1413			64.201									
A 1	2.5		1.40	1.43	65.9	362	86	85	251	259	66	6		
2	5		1.40	1.43	67.5	364	85	85	260	256	62	6		
3	7.5		1.40	1.43	69.2	365	86	85	252	257	61	6		
4	10		1.45	1.48	70.9	365	87	85	261	257	60	6		
5	12.5		1.45	1.48	72.5	365	88	85	251	254	60	6		
6	15		1.20	1.22	74.1	365	88	85	260	250	59	6		
7	17.5		1.25	1.28	75.6	365	89	85	260	250	58	6		
8	20		1.30	1.33	77.2	365	90	86	248	262	57	6		
9	22.5		1.40	1.43	78.9	365	91	86	258	264	57	6		
10	25		1.30	1.33	80.5	364	91	86	259	261	57	6		
11	27.5		1.20	1.23	82.1	364	92	87	250	259	56	6		
12	30	1443	1.05	1.08	83.630	363	92	87	257	263	56	6		
B 1	32.5	1446	1.20	1.24	85.2	364	96	87	254	262	59	6		
2	35		1.10	1.13	86.7	363	93	88	259	262	57	6		
3	37.5		1.20	1.24	88.2	362	92	88	251	262	56	6		
4	40		1.10	1.13	89.7	362	91	88	260	262	55	6		
5	42.5		1.10	1.13	91.2	364	90	89	257	262	55	6		
6	45		1.15	1.18	92.7	364	90	89	258	262	55	6		
7	47.5		1.30	1.33	94.3	364	90	89	254	260	56	6		
8	50		1.55	1.59	96.1	364	89	89	250	263	56	6		
9	52.5		1.60	1.64	97.8	364	89	89	257	262	56	7		
10	55		1.60	1.64	99.6	364	88	89	263	263	56	7		
11	57.5		1.60	1.64	101.4	364	89	89	254	262	56	7		
12	60	1516	1.40	1.44	103.160	363	90	90	260	263	56	8		
			Avg Sqrt Delta P 1.147	Avg Delta H 1.353	Total Volume 38.959	Avg Ts 363.9	Avg Tm 88.4		Min/Max 251/263	Min/Max 250/264	Max Temp 66	Max Vac 8	Max Temp	
				Avg Sqrt Del H 1.161										

Comments: BWS 22.1
ISO 97.9

82.94 FPS
437766 ACFM
214309 SCFM

DA-14185

1.321

WESTON MANAGERS DESIGNERS/CONSULTANTS

ISOKINETIC FIELD DATA SHEET

EPA Method 5 - Particulate (Pulp & Paper)

Client	Bowater
W.O.#	03917.008.015
Project ID	NA
Mode/Source ID	
Samp. Loc. ID	Catawba, SC
Run No.ID	TD0
Test Method ID	M5
Date ID	NA
Source/Location	No. 3 Recovery
Sample Date	April 7, 2010
Baro. Press (in Hg)	29.46
Operator	RG/ LW

Stack Conditions

	Assumed	Actual
% Moisture	23	
Impinger Vol (ml)		
Silica gel (g)		
CO2, % by Vol	13.6	13.4
O2, % by Vol	6.1	6.4
Temperature (°F)		
Meter Temp (°F)		
Static Press (in H_2O)	-1.25	
Ambient Temp (°F)		

Meter Box ID	AO 12
Meter Box Y	0.977
Meter Box Del H	1.883
Probe ID / Length	12C / 12'
Probe Material	ss
Pitot / Thermocouple ID	P12
Pitot Coefficient	0.84
Nozzle ID	.215
Avg Nozzle Dia (in)	.215
Area of Stack (ft²)	88.0
Sample Time	60
Total Traverse Pts	24

Leak Checks

	Initial	Mid-Point	Final
Sample Train (ft³)	.006		0.005
Leak Check @ (in Hg)	12		8
Pitot good	yes / no	yes / no	yes / no
Orsat good	yes / no	yes / no	yes / no

K Factor: 0.005

Temp Check

	Pre-Test Set	Post-Test Set
Meter Box Temp		
Reference Temp		
Pass/Fail (+/- 2°)	Pass / Fail	Pass / Fail
Temp Change Response ?	yes / no	yes / no

TRAVERSE POINT NO.	SAMPLE TIME (min)	CLOCK TIME (plant time)	VELOCITY PRESSURE Delta P (in H2O)	ORIFICE PRESSURE Delta H (in H2O)	DRY GAS METER READING (ft³)	STACK TEMP (°F)	DGM INLET TEMP (°F)	DGM OUTLET TEMP (°F)	PROBE TEMP (°F)	FILTER BOX TEMP (F)	IMPINGER EXIT TEMP (°F)	SAMPLE TRAIN VAC (in Hg)	COMMENTS
	0	1541			104.901								
B 1	2.5		1.10	1.16	106.5	360	91	89	248	263	65	6	
2	5		1.10	1.16	108.0	361	90	90	262	259	62	6	
3	7.5		1.15	1.21	109.6	361	91	90	263	260	60	6	
4	10		1.15	1.21	111.1	361	92	90	263	261	58	6	
5	12.5		1.10	1.16	112.6	362	93	90	263	260	58	6	
6	15		1.10	1.16	114.1	362	93	90	259	262	58	6	
7	17.5		1.30	1.37	115.7	362	94	90	254	262	58	6	
8	20		1.40	1.48	117.4	363	94	90	260	261	58	6	
9	22.5		1.60	1.69	119.2	363	94	90	262	261	57	7	
10	25		1.60	1.69	121.0	364	94	90	249	260	57	7	
11	27.5		1.40	1.48	122.7	364	94	90	252	263	57	7	
12	30	1611	1.30	1.37	124.381	365	95	91	261	261	57	7	
A 1	32.5	1613	1.40	1.48	126.1	364	98	91	260	261	61	7	
2	35		1.40	1.47	127.7	366	95	91	260	262	59	7	
3	37.5		1.45	1.53	129.4	366	95	91	249	262	58	7	
4	40		1.40	1.47	131.1	367	95	91	260	262	57	7	
5	42.5		1.30	1.37	132.9	367	96	91	257	261	57	7	
6	45		1.20	1.26	134.4	367	96	91	256	262	58	7	
7	47.5		1.20	1.26	136.0	367	96	91	259	261	58	7	
8	50		1.20	1.26	137.6	367	96	92	250	261	58	7	
9	52.5		1.40	1.48	139.2	367	96	92	259	259	59	7	
10	55		1.30	1.37	140.9	367	96	92	250	262	59	7	
11	57.5		1.10	1.16	142.4	367	96	92	259	260	59	7	
12	60	1643	1.00	1.06	143.978	366	97	92	261	262	59	7	
			Avg Sqrt Delta P	Avg Delta H	Total Volume	Avg Ts	Avg Tm		Min/Max	Min/Max	Max Temp	Max Vac	Max Temp
			1.128	1.346	39.077	364.4	92.6						
			1.277	Avg Sqrt Del H 1.158									

Comments: BWS 24.1
ISO 101.2

81.94 Ft³
432494 ACFM
206309 SCFM

DA-1469

15B

WESTON MANAGERS DESIGNERS/CONSULTANTS

ISOKINETIC FIELD DATA SHEET

EPA Method 5 - Particulate (Pulp & Paper)

Client	Bowater
W.O.#	03917.008.015
Project ID	NA
Mode/Source ID	
Samp. Loc. ID	Catawba, SC
Run No.ID	THREE
Test Method ID	M5
Date ID	NA
Source/Location	No. 3 Recovery
Sample Date	April 7, 2010
Baro. Press (in Hg)	29.46
Operator	RG/ LW

Stack Conditions

	Assumed	Actual
% Moisture	24	
Impinger Vol (ml)		
Silica gel (g)		
CO2, % by Vol	13.6	13.3
O2, % by Vol	6.1	6.6
Temperature (°F)		
Meter Temp (°F)		
Static Press (in H_2O)		-1.25
Ambient Temp (°F)		

Meter Box ID	AO 12
Meter Box Y	0.977
Meter Box Del H	1.883
Probe ID / Length	12C / 12'
Probe Material	ss
Pitot / Thermocouple ID	P12
Pitot Coefficient	0.84
Nozzle ID	.215
Avg Nozzle Dia (in)	.215
Area of Stack (ft^2)	88.0
Sample Time	60
Total Traverse Pts	24

K Factor

Leak Checks	Initial	Mid-Point	Final
Sample Train (ft^3)	.009		.004
Leak Check @ (in Hg)	12		10
Pitot good	yes / no	yes / no	yes / no
Orsat good	yes / no	yes / no	yes / no

Temp Check	Pre-Test Set	Post-Test Set
Meter Box Temp		
Reference Temp		
Pass/Fail (+/- 2°)	Pass / Fail	Pass / Fail
Temp Change Response ?	yes / no	yes / no

TRAVERSE POINT NO.	SAMPLE TIME (min)	CLOCK TIME (plant time)	VELOCITY PRESSURE Delta P (in H2O)	ORIFICE PRESSURE Delta H (in H2O)	DRY GAS METER READING (ft^3)	STACK TEMP (°F)	DGM INLET TEMP (°F)	DGM OUTLET TEMP (°F)	PROBE TEMP (°F)	FILTER BOX TEMP (F)	IMPINGER EXIT TEMP (°F)	SAMPLE TRAIN VAC (in Hg)		COMMENTS
	0	1718			145.900									
A1	2.5		1.45	1.49	147.7	364	92	90	261	259	61	6		
2	5		1.45	1.48	149.4	369	91	90	252	260	54	6		
3	7.5		1.40	1.43	151.1	369	90	90	258	262	52	6		
4	10		1.35	1.38	152.8	369	89	90	258	262	52	6		
5	12.5		1.20	1.22	154.3	369	89	90	250	261	52	6		
6	15		1.10	1.13	155.7	368	90	90	261	263	52	6		
7	17.5		1.20	1.23	157.1	368	91	90	259	260	52	6		
8	20		1.30	1.33	158.7	368	92	90	252	262	52	6		
9	22.5		1.30	1.33	160.4	367	93	90	258	260	52	6		
10	25		1.10	1.13	161.9	366	93	90	247	263	52	6		
11	27.5		1.10	1.13	163.4	365	94	90	247	260	52	6		
12	30	1748	1.00	1.03	164.815	365	94	90	260	261	52	6		
B1	32.5	1752	1.15	1.19	166.3	365	97	90	258	261	62	6		
2	35		1.15	1.19	167.8	364	94	90	262	261	56	6		
3	37.5		1.10	1.13	169.3	364	94	90	263	262	53	6		
4	40		~~1.10~~ 1.10	1.13	170.8	365	94	91	260	262	52	6		
5	42.5		1.10	1.13	172.3	365	94	91	253	260	52	6		
6	45		1.10	1.13	173.8	365	94	91	254	261	52	6		
7	47.5		1.40	1.44	175.4	365	93	91	251	262	53	7		
8	50		1.40	1.44	177.1	365	92	91	250	262	53	7		
9	52.5		1.60	1.64	178.9	366	91	91	261	262	53	7		
10	55		1.60	1.64	180.7	367	90	91	262	262	53	7		
11	57.5		1.50	1.54	182.5	367	89	91	261	263	53	8		
12	60	1822	1.40	1.44	184.265	366	89	91	260	262	53	8		
			Avg Sqrt Delta P 1.126	Avg Delta H 1.306	Total Volume 38.365	Avg Ts 366.3	Avg Tm 91.2		Min/Max 247/263	Min/Max 259/263	Max Temp 62	Max Vac 8	Max Temp	
				Avg Sqrt Del H 1.140										

WESTON MANAGERS DESIGNERS/CONSULTANTS

1.273

Comments: BAR 23.09

ISO 99.4%

81.68 FPS

431105 ACFM

208006 SCFM

DA-1470

SBB

SAMPLE RECOVERY FIELD DATA

EPA Method 5 - Particulate (Pulp & Paper)

Client	Bowater	W.O. #	03917.008.015
Location/Plant	Catawba, SC	Source & Location	No. 3 Recovery

Run No. ONE Sample Date 7APR10 Recovery Date 7APR10

Sample I.D. DA-1485 Analyst RR2 Filter Number DA-1485

	Impinger									
	1	2	3	4	5	6	7	Imp.Total	8	Total
Contents	Di H20	Di H20	Empty						Silica Gel	
Final	300	108	0						358.9	
Initial	100	100	0						349.9	
Gain	200	8	0					208	9.0	217

Impinger Color ✓ Labeled? Y

Silica Gel Condition ✓ Sealed? Y

Run No. TWO Sample Date 7APR10 Recovery Date 7APR10

Sample I.D. DA-1468 Analyst RR2 Filter Number DA-1468

	Impinger									
	1	2	3	4	5	6	7	Imp.Total	8	Total
Contents	Di H20	Di H20	Empty						Silica Gel	
Final	326	106	0						359.1	
Initial	100	100	0						349.0	242.1
Gain	226	6	0					232	10.1	23 RR

Impinger Color ✓ Labeled? Y

Silica Gel Condition ✓ Sealed? Y

Run No. THREE Sample Date 7APR10 Recovery Date 7APR10

Sample I.D. DA-1470 Analyst RR2 Filter Number DA-1470

	Impinger									
	1	2	3	4	5	6	7	Imp.Total	8	Total
Contents	Di H20	Di H20	Empty						Silica Gel	
Final	308	108	0						332.4	
Initial	100	100	0						323.3	
Gain	208	8	0					216	9.1	225.1

Impinger Color ✓ Labeled? Y

Silica Gel Condition ✓ Sealed? Y

Check COC for Sample IDs of Media Blanks

WESTON MANAGERS DESIGNERS/CONSULTANTS

03917.008.015

Determination of Stack Gas Velocity - Method 2

Client: BOWATER
Location/Plant: CATAWBA, SC
Source: #3 Rec
Operator: RRA / LW
Date: 7 APR 10
W.O. Number:
Pitot Coeff (Cp): .84
Stack Area, ft² (As):
Pitot Tube/Thermo ID: P-12

Run Number	PRE LEN		
Time	1210		
Barometric Press, in Hg (Pb)	29.46		
Static Press, in H_2O (Pstatic)	-1.25		
Source Moisture, % (BWS)	24		
O_2, %			
CO_2, %			

Cyclonic Flow Determination		Traverse Location		Leak Check good ? (Y) N		Leak Check good ? Y / N		Leak Check good ? Y / N	
Delta P at 0°	Angle yeilding zero Delta P	Port	Point	Delta P	Source Temp, F° (Ts)	Delta P	Source Temp, F° (Ts)	Delta P	Source Temp, F° (Ts)
		A	1	1.10	361				
			2	1.15	362				
			3	1.15	362				
			4	1.15	362				
			5	1.15	362				
			6	1.10	362				
			7	1.35	362				
			8	1.40	362				
			9	1.60	362				
			10	1.60	362				
			11	1.40	362				
			12	1.30	362				
		B	1	1.40	362				
			2	1.35	362				
			3	1.40	362				
			4	1.35	362				
			5	1.30	362				
			6	1.10	362				
			7	1.20	362				
			8	1.20	362				
			9	1.25	362				
			10	1.20	362				
			11	1.10	361				
			12	0.95	361				
Avg Angle		Avg Delta P & Temp		1.26	362				
		avg $\sqrt{DeltaP}$		1.121					
Average gas stream velocity, ft/sec.				81.44					
Vol. flow rate @ actual conditions, wacf/min				429832					
Vol. flow rate at standard conditions, dscf/min				205997					

$$MWd = (0.32 * O_2) + (0.44 * CO_2) + (0.28 * (100 - (CO_2 + O_2)))$$

$$MWs = (MWd * (1 - (BWS/100))) + (18 * (BWS/100))$$

$$Tsa = Ts + 460$$

$$Ps = Pb + (Pstatic/13.6)$$

$$Vs = 85.49 * Cp * avg\sqrt{DeltaP} * \sqrt{Tsa/(Ps * MWs)}$$

$$Qs(act) = 60 * Vs * As$$

$$Qs(std) = 17.64 * (1 - (BWS/100)) * (Ps/Tsa) * Qs(act)$$

where:
MWd = Dry molecular weight source gas, lb/lb-mole.
MWs = Wet molecular weight source gas, lb/lb-mole.
Tsa = Source Temperature, absolute(oR)
Ps = Absolute stack static pressure, inches Hg.
Vs = Average gas stream velocity, ft/sec.
Qs(act) = Volumetric flow rate of wet stack gas at actual,
Qs(std) = Volumetric flow rate of dry stack gas at standard conditions, dscf/min

Comments

WESTON MANAGERS DESIGNERS/CONSULTANTS

Method2

Copyright Roy F Weston Inc October 1998

Sample and Velocity Traverse Point Data Sheet - Method 1

Client	Bowater	Operator	TS
Loaction/Plant	Catawba, SC	Date	7-Apr-10
Source	Nos. 3 Recovery	W.O. Number	03917.008.015

Duct Type	☑ Circular	☐ Rectangular Duct	Indicate appropriate type
Traverse Type	☑ Particulate Traverse	☐ Velocity Traverse	

Distance from far wall to outside of port (in.) = C	139.00
Port Depth (in.) = D	12.00
Depth of Duct, diameter (in.) = C-D	127
Area of Duct (ft^2)	87.97
Total Traverse Points	24
Total Traverse Points per Port	12

Rectangular Ducts Only	
Width of Duct, rectangular duct only (in.)	
Total Ports (rectangular duct only)	

Flow Disturbances	
Upstream - A (ft)	100.0
Downstream - B (ft)	40.0
Upstream - A (duct diameters)	9.45
Downstream - B (duct diameters)	3.78

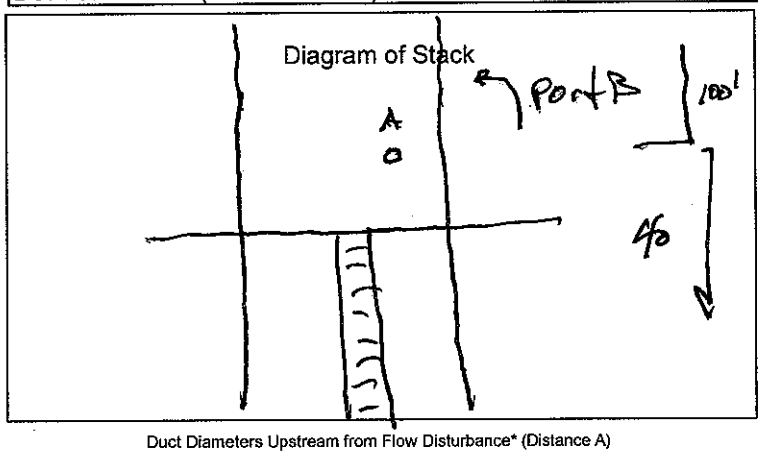

Traverse Point Locations

Traverse Point	% of Duct	Distance from Inside Duct Wall (in)	Distance from Outside of Port (in)
1	2.1	2.7	14.7
2	6.7	8.5	20.5
3	11.8	15.0	27.0
4	17.7	22.5	34.5
5	25.0	31.8	43.8
6	35.6	45.2	57.2
7	64.4	81.8	93.8
8	75.0	95.3	107.3
9	82.3	104.5	116.5
10	88.2	112.0	124.0
11	93.3	118.5	130.5
12	97.9	124.3	136.3

Equivalent Diameter = (2*L*W)/(L+W)

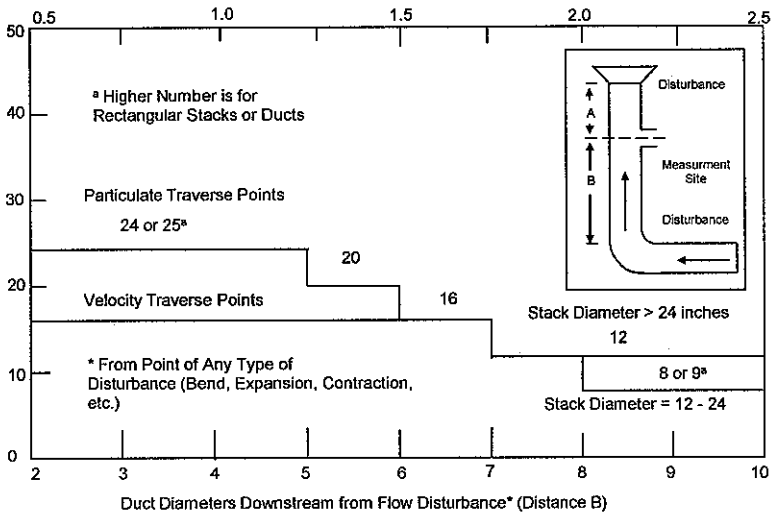

Traverse Point Location Percent of Stack -Circular

Traverse Point Location	Number of Traverse Points: 1	2	3	4	5	6	7	8	9	10	11	12
1		14.6		6.7		4.4		3.2		2.6		2.1
2		85.4		25		14.6		10.5		8.2		6.7
3				75		29.6		19.4		14.6		11.8
4				93.3		70.4		32.3		22.6		17.7
5						85.4		67.7		34.2		25
6						95.6		80.6		65.8		35.6
7								89.5		77.4		64.4
8								96.8		85.4		75
9										91.8		82.3
10										97.4		88.2
11												93.3
12												97.9

Traverse Point Location Percent of Stack -Rectangular

Traverse Point Location	Number of Traverse Points: 1	2	3	4	5	6	7	8	9	10	11	12
1		25.0	16.7	12.5	10.0	8.3	7.1	6.3	5.6	5.0	4.5	4.2
2		75.0	50.0	37.5	30.0	25.0	21.4	18.8	16.7	15.0	13.6	12.5
3			83.3	62.5	50.0	41.7	35.7	31.3	27.8	25.0	22.7	20.8
4				87.5	70.0	58.3	50.0	43.8	38.9	35.0	31.8	29.2
5					90.0	75.0	64.3	56.3	50.0	45.0	40.9	37.5
6						91.7	78.6	68.8	61.1	55.0	50.0	45.8
7							92.9	81.3	72.2	65.0	59.1	54.2
8								93.8	83.3	75.0	68.2	62.5
9									94.4	85.0	77.3	70.8
10										95.0	86.4	79.2
11											95.5	87.5
12												95.8

Rectangular Stack Points & Matrix
9 - 3 x 3
12 - 4 x 3
16 - 4 x 4
20 - 5 x 4
25 - 5 x 5
30 - 6 x 5
36 - 6 x 6
42 - 7 x 6
49 - 7 x 7

WESTON MANAGERS DESIGNERS/CONSULTANTS

Copyright Roy F Weston Inc Oct 1998PV

03917.008.015

Determination of Stack Gas Velocity - Method 2

Client: BOWATER
Location/Plant: CATAWBA, SC
Source: #3 Rec BLR

Operator: BRD/LU
Date: 7APR10
W.O. Number: 03917

Pitot Coeff (Cp): .84
Stack Area, ft² (As):
Pitot Tube/Thermo ID: P-12

Run Number	PRE-LSA		
Time			
Barometric Press, in Hg (Pb)			
Static Press, in H_20 (Pstatic)			
Source Moisture, % (BWS)			
O_2, %			
CO_2, %			

Cyclonic Flow Determination		Traverse Location		Leak Check good ? Y / N		Leak Check good ? Y / N		Leak Check good ? Y / N	
Delta P at 0°	Angle yeilding zero Delta P	Port	Point	Delta P	Source Temp, F° (Ts)	Delta P	Source Temp, F° (Ts)	Delta P.	Source Temp, F° (Ts)
0	5	A	1						
0	5		2						
0	5		3						
0	0		4						
0	0		5						
0	0		6						
0	0		7						
0	0		8						
0	0		9						
0	0		10						
0	3		11						
0	7		12						
0	5	B	1						
0	5		2						
0	3		3						
0	0		4						
0	0		5						
0	0		6						
0	0		7						
0	0		8						
0	0		9						
0	5		10						
0	5		11						
0	5		12						
Avg Angle		Avg Delta P & Temp							
		avg $\sqrt{DeltaP}$							
Average gas stream velocity, ft/sec.									
Vol. flow rate @ actual conditions, wacf/min									
Vol. flow rate at standard conditions, dscf/min									

$$MWd = (0.32 * O_2) + (0.44 * CO_2) + (0.28 * (100 - (CO_2 + O_2)))$$

$$MWs = (MWd * (1 - (BWS/100))) + (18 * (BWS/100))$$

$$Tsa = Ts + 460$$

$$Ps = Pb + (Pstatic/13.6)$$

$$Vs = 85.49 * Cp * avg\sqrt{DeltaP} * \sqrt{Tsa/(Ps * MWs)}$$

$$Qs(act) = 60 * Vs * As$$

$$Qs(std) = 17.64 * (1 - (BWS/100)) * (Ps/Tsa) * Qs(act)$$

where:
MWd = Dry molecular weight source gas, lb/lb-mole.
MWs = Wet molecular weight source gas, lb/lb-mole.
Tsa = Source Temperature, absolute(oR)
Ps = Absolute stack static pressure, inches Hg.
Vs = Average gas stream velocity, ft/sec.
Qs(act) = Volumetric flow rate of wet stack gas at actual,
Qs(std) = Volumetric flow rate of dry stack gas at standard conditions, dscf/min

Comments _____

WESTON MANAGERS DESIGNERS/CONSULTANTS

Copyright Roy F Weston Inc October 1998

NITROGEN DIOXIDE, CARBON MONOXIDE, AND SULFUR DIOXIDE

EMISSION CALCULATIONS

	Run 1	Run 2	Run 3	Mean
Date	**4/7/2010**	**4/7/2010**	**4/7/2010**	---
Time Began	**1413**	**1541**	**1718**	---
Time Ended	**1516**	**1646**	**1823**	---
Volumetric Flow Rate, (Qs), DSCFM	2.15E+05	2.07E+05	2.08E+05	2.10E+05
BWS	0.220	0.240	0.230	0.230
% Oxygen	6.6	6.4	6.6	6.5
Oxygen Reference Concentration, %	8.0	8.0	8.0	8.0
Nitrogen Oxides MW= 46.01				
Concentration, ppm	56.0	63.0	59.0	59.3
Concentration, ppm @8%O2	50.5	56.0	53.2	53.3
Emission Rate, lb/hr	86.2	93.2	88.0	89.1
Sulfur Dioxide MW= 64.06				
Concentration, ppm	< 0.2	< 0.9	< 0.3	< 0.5
Concentration, ppm @8%O2	< 0.2	< 0.8	< 0.3	< 0.4
Emission Rate, lb/hr	< 0.4	< 1.9	< 0.6	< 1.0
Carbon Monoxide MW= 28.00				
Concentration, ppm	77.0	139.0	143.0	119.7
Concentration, ppm @8%O2	69.5	123.7	129.0	107.4
Emission Rate, lb/hr	72.1	125.1	129.8	109.0

RUN SUMMARY

Number 1

Client: **Bowater**
Location: **Catawba, SC**
Source: **No. 3 Recovery**

Calibration **1**

Project Number: **03917.008.015**
Operator: **T. Simpkins**
Date: **7 Apr 2010**

	O_2	CO_2	CO	NO_x	SO_2
Method	EPA 3A	EPA 3A	EPA 10	EPA 7E	EPA 6C
Conc. Units	%	%	ppm	ppm	ppm
		Time: 14:13 to 15:16			
		Run Averages			
	6.7	13.1	75	55	0.4
		Pre-run Bias at 11:19			
Zero Bias	0.2	-0.1	1	-1	0.1
Span Bias	10.2	10.1	431	121	45.1
Span Gas	10.2	10.2	456	125	47.2
		Post-run Bias at 15:16			
Zero Bias	0.2	0.0	5	-1	0.4
Span Bias	10.1	10.2	430	123	45.1
Span Gas	10.2	10.2	456	125	47.2
		Averages corrected for the average of the pre-run and post-run bias			
	6.6	13.1	77	56	0.2

JSB

RUN SUMMARY

Number 2

Client: **Bowater**
Location: **Catawba, SC**
Source: **No. 3 Recovery**

Calibration **1**

Project Number: **03917.008.015**
Operator: **T. Simpkins**
Date: **7 Apr 2010**

	O_2	CO_2	CO	NO_x	SO_2
Method	EPA 3A	EPA 3A	EPA 10	EPA 7E	EPA 6C
Conc. Units	%	%	ppm	ppm	ppm
		Time: 15:41 to 16:46			
		Run Averages			
	6.4	13.3	136	61	1.3
		Pre-run Bias at 15:16			
Zero Bias	0.2	0.0	5	-1	0.4
Span Bias	10.1	10.2	430	123	45.1
Span Gas	10.2	10.2	456	125	47.2
		Post-run Bias at 16:47			
Zero Bias	0.2	0.0	7	-2	0.4
Span Bias	10.0	10.0	431	124	44.5
Span Gas	10.2	10.2	456	125	47.2
		Averages corrected for the average of the pre-run and post-run bias			
	6.4	13.4	139	63	0.9

158

RUN SUMMARY

Number 3

Client: **Bowater**
Location: **Catawba, SC**
Source: **No. 3 Recovery**

Calibration **1**

Project Number: **03917.008.015**
Operator: **T. Simpkins**
Date: **7 Apr 2010**

	O_2	CO_2	CO	NO_x	SO_2
Method	EPA 3A	EPA 3A	EPA 10	EPA 7E	EPA 6C
Conc. Units	%	%	ppm	ppm	ppm

Time: 17:18 to 18:23

Run Averages

	6.6	13.1	139	58	0.7

Pre-run Bias at 16:47

Zero Bias	0.2	0.0	7	-2	0.4
Span Bias	10.0	10.0	431	124	44.5
Span Gas	10.2	10.2	456	125	47.2

Post-run Bias at 18:24

Zero Bias	0.2	0.4	5	-1	0.5
Span Bias	10.1	10.2	431	123	46.3
Span Gas	10.2	10.2	456	125	47.2

Averages corrected for the average of the pre-run and post-run bias

	6.6	13.3	143	59	0.3

RUN DATA

Number 1

Client: **Bowater**
Location: **Catawba, SC**
Source: **No. 3 Recovery**

Calibration **1**

Project Number: **03917.008.015**
Operator: **T. Simpkins**
Date: **7 Apr 2010**

Time	O_2		CO_2		CO		NO_x		SO_2	
	mv	%	mv	%	mv	ppm	mv	ppm	mv	ppm
					Port B- pt 1					
14:14	278	6.7	158	13.1	153	99	1785	52	88	0.4
14:15	275	6.6	158	13.1	135	82	1803	53	88	0.4
14:16	280	6.8	157	13.0	142	89	1773	52	92	0.4
14:17	278	6.7	159	13.1	149	95	1790	53	80	0.3
14:18	282	6.8	157	13.0	115	63	1808	53	90	0.4
					pt 2					
14:19	281	6.8	158	13.1	141	88	1820	53	88	0.4
14:20	280	6.8	157	13.0	146	92	1766	52	89	0.4
14:21	277	6.7	158	13.1	170	115	1796	53	87	0.4
14:22	281	6.8	157	13.0	105	53	1771	52	85	0.4
14:23	280	6.8	157	13.0	134	81	1753	51	85	0.4
					pt 3					
14:24	277	6.7	156	12.9	132	79	1790	53	91	0.4
14:25	277	6.7	157	13.0	150	96	1829	54	86	0.4
14:26	277	6.7	155	12.8	136	83	1804	53	84	0.4
14:27	283	6.9	154	12.7	104	52	1822	53	86	0.4
14:28	279	6.7	157	13.0	106	54	1820	53	85	0.4
					pt 4					
14:29	285	6.9	154	12.7	98	46	1826	54	85	0.4
14:30	285	6.9	154	12.7	85	34	1828	54	87	0.4
14:31	278	6.7	156	12.9	138	85	1788	52	82	0.3
14:32	283	6.9	157	13.0	125	72	1788	52	83	0.3
14:33	281	6.8	157	13.0	174	119	1796	53	81	0.3
					pt 5					
14:34	276	6.7	160	13.2	287	228	1829	54	85	0.4
14:35	278	6.7	158	13.1	157	103	1798	53	82	0.3
14:36	278	6.7	160	13.2	139	86	1823	54	86	0.4
14:37	278	6.7	158	13.1	133	80	1854	54	83	0.3
14:38	276	6.7	159	13.1	136	83	1860	55	87	0.4
					pt 6					
14:39	275	6.6	159	13.1	171	116	1894	56	86	0.4
14:40	280	6.8	159	13.1	113	61	1922	57	89	0.4
14:41	276	6.7	157	13.0	181	126	1868	55	85	0.4
14:42	279	6.7	157	13.0	158	104	1831	54	87	0.4
14:43	275	6.6	156	12.9	218	161	1876	55	84	0.4
					Port A- pt 1					
14:46	279	6.7	155	12.8	126	73	1899	56	81	0.3
14:47	272	6.6	159	13.1	231	174	1894	56	90	0.4
14:48	278	6.7	157	13.0	158	104	1868	55	86	0.4
14:49	274	6.6	157	13.0	244	186	1874	55	87	0.4
14:50	278	6.7	157	13.0	121	68	1892	56	88	0.4

RUN DATA

Number 1

Client: **Bowater**
Location: **Catawba, SC**
Source: **No. 3 Recovery**

Calibration **1**

Project Number: **03917.008.015**
Operator: **T. Simpkins**
Date: **7 Apr 2010**

Time	O_2		CO_2		CO		NO_x		SO_2	
	mv	%	mv	%	mv	ppm	mv	ppm	mv	ppm
					pt 2					
14:51	274	6.6	160	13.2	106	54	1883	55	88	0.4
14:52	275	6.6	159	13.1	100	48	1873	55	88	0.4
14:53	276	6.7	160	13.2	94	43	1891	56	89	0.4
14:54	273	6.6	160	13.2	101	49	1886	55	90	0.4
14:55	273	6.6	160	13.2	89	38	1927	57	84	0.4
					pt 3					
14:56	272	6.6	161	13.3	81	30	1911	56	86	0.4
14:57	273	6.6	161	13.3	76	25	1907	56	83	0.3
14:58	269	6.5	161	13.3	99	47	1924	57	84	0.4
14:59	269	6.5	161	13.3	87	36	1885	55	84	0.4
15:00	268	6.5	159	13.1	94	43	1875	55	78	0.3
					pt 4					
15:01	271	6.5	158	13.1	86	35	1938	57	84	0.4
15:02	273	6.6	159	13.1	75	24	1920	56	94	0.5
15:03	276	6.7	156	12.9	77	26	1902	56	89	0.4
15:04	273	6.6	159	13.1	81	30	1901	56	92	0.4
15:05	274	6.6	157	13.0	70	20	1929	57	99	0.5
					pt 5					
15:06	267	6.4	159	13.1	93	42	1888	56	97	0.5
15:07	271	6.5	158	13.1	76	25	1890	56	94	0.5
15:08	275	6.6	160	13.2	77	26	1880	55	95	0.5
15:09	272	6.6	160	13.2	129	76	1845	54	90	0.4
15:10	275	6.6	161	13.3	133	80	1853	54	91	0.4
					pt 6					
15:11	265	6.4	162	13.4	113	61	1881	55	86	0.4
15:12	269	6.5	161	13.3	133	80	1847	54	86	0.4
15:13	270	6.5	161	13.3	130	77	1858	55	91	0.4
15:14	273	6.6	159	13.1	126	73	1903	56	88	0.4
15:15	266	6.4	162	13.4	143	90	1924	57	91	0.4
15:16	266	6.4	162	13.4	116	64	1908	56	87	0.4
Avgs	**276**	**6.7**	**158**	**13.1**	**128**	**75**	**1855**	**55**	**87**	**0.4**

158

RUN DATA

Number 2

Client: **Bowater**
Location: **Catawba, SC**
Source: **No. 3 Recovery**

Calibration **1**

Project Number: **03917.008.015**
Operator: **T. Simpkins**
Date: **7 Apr 2010**

Time	O_2		CO_2		CO		NO_x		SO_2	
	mv	%	mv	%	mv	ppm	mv	ppm	mv	ppm
					Port A- pt 1					
15:42	264	6.4	161	13.3	148	94	2236	66	219	1.7
15:43	267	6.4	159	13.1	106	54	2208	65	204	1.6
15:44	267	6.4	161	13.3	130	77	2183	64	184	1.4
15:45	265	6.4	162	13.4	152	98	2182	64	191	1.4
15:46	263	6.3	163	13.5	181	126	2114	62	173	1.2
					pt 2					
15:47	265	6.4	162	13.4	240	183	2131	63	183	1.3
15:48	264	6.4	163	13.5	214	158	2101	62	176	1.3
15:49	263	6.3	162	13.4	195	139	2092	62	175	1.3
15:50	266	6.4	163	13.5	180	125	2072	61	171	1.2
15:51	266	6.4	162	13.4	119	66	2118	62	183	1.3
					pt 3					
15:52	266	6.4	162	13.4	105	53	2105	62	177	1.3
15:53	271	6.5	160	13.2	113	61	2076	61	176	1.3
15:54	269	6.5	158	13.1	154	100	2070	61	185	1.4
15:55	270	6.5	159	13.1	193	137	2065	61	176	1.3
15:56	268	6.5	158	13.1	170	115	2078	61	189	1.4
					pt 4					
15:57	264	6.4	160	13.2	185	130	2064	61	176	1.3
15:58	267	6.4	159	13.1	162	108	2073	61	182	1.3
15:59	265	6.4	161	13.3	163	109	2069	61	170	1.2
16:00	265	6.4	160	13.2	161	107	2122	63	171	1.2
16:01	259	6.2	162	13.4	203	147	2150	63	170	1.2
					pt 5					
16:02	264	6.4	161	13.3	177	122	2089	62	174	1.3
16:03	266	6.4	162	13.4	232	175	2064	61	175	1.3
16:04	269	6.5	163	13.5	175	120	2062	61	164	1.2
16:05	264	6.4	163	13.5	134	81	2072	61	164	1.2
16:06	265	6.4	163	13.5	155	101	2035	60	168	1.2
					pt 6					
16:07	268	6.5	162	13.4	150	96	2039	60	168	1.2
16:08	264	6.4	162	13.4	174	119	2037	60	167	1.2
16:09	265	6.4	162	13.4	176	121	2055	61	181	1.3
16:10	271	6.5	162	13.4	171	116	2035	60	175	1.3
16:11	268	6.5	160	13.2	226	169	2063	61	191	1.4
					Port B pt 1					
16:14	266	6.4	159	13.1	178	123	2021	60	179	1.3
16:15	262	6.3	160	13.2	223	166	2008	59	178	1.3
16:16	268	6.5	160	13.2	250	192	2019	59	176	1.3
16:17	268	6.5	158	13.1	126	73	2016	59	167	1.2
16:18	263	6.3	161	13.3	260	202	2015	59	171	1.2

RUN DATA

Number 2

Client: **Bowater**
Location: **Catawba, SC**
Source: **No. 3 Recovery**

Calibration **1**

Project Number: **03917.008.015**
Operator: **T. Simpkins**
Date: **7 Apr 2010**

Time	O_2		CO_2		CO		NO_x		SO_2	
	mv	%	mv	%	mv	ppm	mv	ppm	mv	ppm
					pt 2					
16:19	264	6.4	159	13.1	243	185	1982	58	157	1.1
16:20	265	6.4	160	13.2	163	109	1991	59	168	1.2
16:21	268	6.5	162	13.4	116	64	2021	60	164	1.2
16:22	264	6.4	162	13.4	176	121	2011	59	174	1.3
16:23	262	6.3	163	13.5	357	295	2059	61	160	1.1
					pt 3					
16:24	264	6.4	163	13.5	210	154	2081	61	169	1.2
16:25	273	6.6	159	13.1	231	174	2036	60	157	1.1
16:26	271	6.5	160	13.2	283	224	2023	60	157	1.1
16:27	268	6.5	162	13.4	210	154	2074	61	155	1.1
16:28	269	6.5	160	13.2	159	105	2052	60	164	1.2
					pt 4					
16:29	273	6.6	160	13.2	151	97	2051	60	163	1.1
16:30	266	6.4	159	13.1	237	180	2107	62	159	1.1
16:31	264	6.4	160	13.2	211	155	2127	63	153	1.0
16:32	270	6.5	158	13.1	150	96	2093	62	156	1.1
16:33	269	6.5	160	13.2	172	117	2125	63	151	1.0
					pt 5					
16:34	265	6.4	159	13.1	132	79	2097	62	152	1.0
16:35	269	6.5	159	13.1	141	88	2137	63	162	1.1
16:36	264	6.4	160	13.2	193	137	2086	62	156	1.1
16:37	266	6.4	159	13.1	243	185	2082	61	170	1.2
16:38	262	6.3	163	13.5	477	410	2113	62	173	1.2
					pt 6					
16:39	262	6.3	163	13.5	278	219	2097	62	189	1.4
16:40	268	6.5	163	13.5	327	266	2110	62	167	1.2
16:41	264	6.4	163	13.5	255	197	2093	62	183	1.3
16:42	267	6.4	162	13.4	140	87	2111	62	178	1.3
16:43	268	6.5	161	13.3	180	125	2124	63	198	1.5
16:44	267	6.4	163	13.5	122	69	2151	63	191	1.4
16:45	263	6.3	162	13.4	245	187	2148	63	213	1.6
16:46	271	6.5	162	13.4	156	102	2125	63	203	1.5
Avgs	**266**	**6.4**	**161**	**13.3**	**191**	**136**	**2083**	**61**	**174**	**1.3**

RUN DATA

Number 3

Client: **Bowater**
Location: **Catawba, SC**
Source: **No. 3 Recovery**

Calibration **1**

Project Number: **03917.008.015**
Operator: **T. Simpkins**
Date: **7 Apr 2010**

Time	O_2		CO_2		CO		NO_x		SO_2	
	mv	%	mv	%	mv	ppm	mv	ppm	mv	ppm
					Port B- pt 1					
17:19	277	6.7	158	13.1	167	113	1976	58	124	0.8
17:20	269	6.5	162	13.4	270	211	1987	59	128	0.8
17:21	270	6.5	160	13.2	250	192	1975	58	123	0.7
17:22	270	6.5	160	13.2	294	234	1973	58	128	0.8
17:23	275	6.6	159	13.1	262	204	1921	57	119	0.7
					pt 2					
17:24	275	6.6	157	13.0	247	189	1936	57	115	0.7
17:25	272	6.6	157	13.0	359	297	1907	56	119	0.7
17:26	270	6.5	158	13.1	337	276	1974	58	120	0.7
17:27	272	6.6	157	13.0	224	167	1987	59	122	0.7
17:28	274	6.6	156	12.9	214	158	1970	58	111	0.6
					pt 3					
17:29	266	6.4	161	13.3	195	139	2008	59	115	0.7
17:30	275	6.6	157	13.0	194	138	1981	58	115	0.7
17:31	274	6.6	158	13.1	239	182	1946	57	111	0.6
17:32	272	6.6	158	13.1	250	192	2006	59	114	0.7
17:33	273	6.6	159	13.1	239	182	1963	58	118	0.7
					pt 4					
17:34	278	6.7	158	13.1	199	143	1978	58	119	0.7
17:35	275	6.6	160	13.2	204	148	2024	60	120	0.7
17:36	275	6.6	159	13.1	211	155	1936	57	120	0.7
17:37	280	6.8	159	13.1	187	132	1969	58	119	0.7
17:38	275	6.6	158	13.1	153	99	1925	57	123	0.7
					pt 5					
17:39	274	6.6	159	13.1	182	127	1947	57	115	0.7
17:40	277	6.7	159	13.1	170	115	1889	56	112	0.6
17:41	271	6.5	159	13.1	250	192	1909	56	109	0.6
17:42	273	6.6	158	13.1	273	214	1887	55	115	0.7
17:43	278	6.7	156	12.9	256	198	1871	55	113	0.6
					pt 6					
17:44	273	6.6	157	13.0	205	149	1891	56	119	0.7
17:45	276	6.7	156	12.9	240	183	1933	57	122	0.7
17:46	276	6.7	157	13.0	146	92	1947	57	119	0.7
17:47	279	6.7	155	12.8	128	75	1958	58	114	0.7
17:48	271	6.5	159	13.1	185	130	1942	57	118	0.7
					Port A- pt 1					
17:51	275	6.6	159	13.1	183	128	1976	58	122	0.7
17:52	272	6.6	160	13.2	170	115	1964	58	118	0.7
17:53	274	6.6	159	13.1	142	89	1990	59	119	0.7
17:54	272	6.6	161	13.3	160	106	2030	60	116	0.7
17:55	271	6.5	160	13.2	133	80	2013	59	117	0.7

RUN DATA

Number 3

Client: **Bowater**
Location: **Catawba, SC**
Source: **No. 3 Recovery**

Calibration **1**

Project Number: **03917.008.015**
Operator: **T. Simpkins**
Date: **7 Apr 2010**

Time	O_2		CO_2		CO		NO_x		SO_2	
	mv	%	mv	%	mv	ppm	mv	ppm	mv	ppm
					pt 2					
17:56	276	6.7	158	13.1	106	54	2011	59	113	0.6
17:57	272	6.6	161	13.3	142	89	2022	60	119	0.7
17:58	269	6.5	160	13.2	176	121	1977	58	122	0.7
17:59	271	6.5	161	13.3	120	67	1976	58	128	0.8
18:00	268	6.5	158	13.1	121	68	1929	57	118	0.7
					pt 3					
18:01	270	6.5	158	13.1	133	80	1913	56	128	0.8
18:02	266	6.4	159	13.1	180	125	1921	57	123	0.7
18:03	271	6.5	158	13.1	212	156	1951	57	118	0.7
18:04	270	6.5	157	13.0	209	153	1951	57	122	0.7
18:05	273	6.6	158	13.1	215	159	1963	58	126	0.8
					pt 4					
18:06	275	6.6	156	12.9	108	56	1974	58	128	0.8
18:07	272	6.6	157	13.0	145	91	1952	57	125	0.8
18:08	272	6.6	160	13.2	175	120	1965	58	128	0.8
18:09	271	6.5	160	13.2	136	83	1936	57	124	0.8
18:10	272	6.6	161	13.3	177	122	1931	57	129	0.8
					pt 5					
18:11	273	6.6	160	13.2	171	116	1952	57	127	0.8
18:12	272	6.6	159	13.1	165	111	1980	58	132	0.8
18:13	274	6.6	159	13.1	150	96	1979	58	131	0.8
18:14	267	6.4	162	13.4	118	66	2011	59	126	0.8
18:15	269	6.5	160	13.2	103	51	2027	60	131	0.8
					pt 6					
18:16	273	6.6	161	13.3	95	43	2043	60	130	0.8
18:17	268	6.5	159	13.1	152	98	1974	58	135	0.9
18:18	268	6.5	158	13.1	240	183	1991	59	131	0.8
18:19	266	6.4	160	13.2	213	157	2001	59	131	0.8
18:20	266	6.4	158	13.1	242	184	2021	60	130	0.8
18:21	265	6.4	161	13.3	165	111	2008	59	130	0.8
18:22	266	6.4	159	13.1	140	87	1975	58	132	0.8
18:23	274	6.6	156	12.9	429	364	1854	54	135	0.9
Avgs	**272**	**6.6**	**159**	**13.1**	**195**	**139**	**1963**	**58**	**122**	**0.7**

BIAS
Number 1

Client: **Bowater**
Location: **Catawba, SC**
Source: **No. 3 Recovery**

Calibration **1**

Project Number: **03917.008.015**
Operator: **T. Simpkins**
Date: **7 Apr 2010**

Start Time: 11:19

O_2
Method: EPA 3A
Span Conc. 20.2 %

Bias Results

Standard Gas	Cal. %	Response mv	Bias %	Difference %	Error %	Status
Zero	0.0	19	0.2	0.2	1.0	Pass
Span	10.2	416	10.2	0.0	0.0	Pass

CO_2
Method: EPA 3A
Span Conc. 20.1 %

Bias Results

Standard Gas	Cal. %	Response mv	Bias %	Difference %	Error %	Status
Zero	0.0	10	-0.1	-0.1	-0.5	Pass
Span	10.1	125	10.1	0.0	0.0	Pass

CO
Method: EPA 10
Span Conc. 852 ppm

Bias Results

Standard Gas	Cal. ppm	Response mv	Bias ppm	Difference ppm	Error %	Status
Zero	4	51	1	-3	-0.4	Pass
Span	447	499	431	-16	-1.9	Pass

BIAS
Number 1

Client: **Bowater**
Location: **Catawba, SC**
Source: **No. 3 Recovery**

Calibration **1**

Project Number: **03917.008.015**
Operator: **T. Simpkins**
Date: **7 Apr 2010**

Start Time: 11:19

NO_x
Method: EPA 7E
Span Conc. 253 ppm

Bias Results

Standard Gas	Cal. ppm	Response mv	Bias ppm	Difference ppm	Error %	Status
Zero	-2	11	-1	1	0.4	Pass
Span	128	4032	121	-7	-2.8	Pass

SO_2
Method: EPA 6C
Span Conc. 92.3 ppm

Bias Results

Standard Gas	Cal. ppm	Response mv	Bias ppm	Difference ppm	Error %	Status
Zero	-0.4	54	0.1	0.5	0.5	Pass
Span	46.8	4575	45.1	-1.7	-1.8	Pass

BIAS AND CALIBRATION DRIFT

Number 2

Client: **Bowater**
Location: **Catawba, SC**
Source: **No. 3 Recovery**

Calibration **1**

Project Number: **03917.008.015**
Operator: **T. Simpkins**
Date: **7 Apr 2010**

Start Time: 15:16

O_2
Method: EPA 3A
Span Conc. 20.2 %

Bias Results

Standard Gas	Cal. %	Response mv	Bias %	Difference %	Error %	Status
Zero	0.0	21	0.2	0.2	1.0	Pass
Span	10.2	410	10.1	-0.1	-0.5	Pass

Calibration Drift

Standard Gas	Initial* %	Final mv	Final %	Difference %	Drift %	Status
Zero	0.2	21	0.2	0.0	0.0	Pass
Span	10.2	410	10.1	-0.1	-0.5	Pass

*Bias No. 1

CO_2
Method: EPA 3A
Span Conc. 20.1 %

Bias Results

Standard Gas	Cal. %	Response mv	Bias %	Difference %	Error %	Status
Zero	0.0	12	0.0	0.0	0.0	Pass
Span	10.1	126	10.2	0.1	0.5	Pass

Calibration Drift

Standard Gas	Initial* %	Final mv	Final %	Difference %	Drift %	Status
Zero	-0.1	12	0.0	0.1	0.5	Pass
Span	10.1	126	10.2	0.1	0.5	Pass

*Bias No. 1

BIAS AND CALIBRATION DRIFT

Number 2

Client: **Bowater**
Location: **Catawba, SC**
Source: **No. 3 Recovery**

Calibration **1**

Project Number: **03917.008.015**
Operator: **T. Simpkins**
Date: **7 Apr 2010**

Start Time: 15:16

CO
Method: EPA 10
Span Conc. 852 ppm

Bias Results

Standard Gas	Cal. ppm	Response mv	Bias ppm	Difference ppm	Error %	Status
Zero	4	55	5	1	0.1	Pass
Span	447	498	430	-17	-2.0	Pass

Calibration Drift

Standard Gas	Initial* ppm	Final mv	Final ppm	Difference ppm	Drift %	Status
Zero	1	55	5	4	0.5	Pass
Span	431	498	430	-1	-0.1	Pass

*Bias No. 1

NO_x
Method: EPA 7E
Span Conc. 253 ppm

Bias Results

Standard Gas	Cal. ppm	Response mv	Bias ppm	Difference ppm	Error %	Status
Zero	-2	33	-1	1	0.4	Pass
Span	128	4111	123	-5	-2.0	Pass

Calibration Drift

Standard Gas	Initial* ppm	Final mv	Final ppm	Difference ppm	Drift %	Status
Zero	-1	33	-1	0	0.0	Pass
Span	121	4111	123	2	0.8	Pass

*Bias No. 1

BIAS AND CALIBRATION DRIFT

Number 2

Client: **Bowater**
Location: **Catawba, SC**
Source: **No. 3 Recovery**

Calibration **1**

Project Number: **03917.008.015**
Operator: **T. Simpkins**
Date: **7 Apr 2010**

Start Time: 15:16

SO_2
Method: EPA 6C
Span Conc. 92.3 ppm

Bias Results

Standard Gas	Cal. ppm	Response mv	Bias ppm	Difference ppm	Error %	Status
Zero	-0.4	92	0.4	0.8	0.9 ✓	Pass
Span	46.8	4579	45.1	-1.7	-1.8 ✓	Pass

Calibration Drift

Standard Gas	Initial* ppm	Final mv	Final ppm	Difference ppm	Drift %	Status
Zero	0.1	92	0.4	0.3	0.3 ✓	Pass
Span	45.1	4579	45.1	0.0	0.0 ✓	Pass

*Bias No. 1

BIAS AND CALIBRATION DRIFT

Number 3

Client: **Bowater**
Location: **Catawba, SC**
Source: **No. 3 Recovery**

Calibration **1**

Project Number: **03917.008.015**
Operator: **T. Simpkins**
Date: **7 Apr 2010**

Start Time: 16:47

O_2
Method: EPA 3A
Span Conc. 20.2 %

Bias Results

Standard Gas	Cal. %	Response mv	Bias %	Difference %	Error %	Status
Zero	0.0	20	0.2	0.2	1.0 ✓	Pass
Span	10.2	409	10.0	-0.2	-1.0 ✓	Pass

Calibration Drift

Standard Gas	Initial* %	Final mv	Final %	Difference %	Drift %	Status
Zero	0.2	20	0.2	0.0	0.0 ✓	Pass
Span	10.1	409	10.0	-0.1	-0.5 ✓	Pass

*Bias No. 2

CO_2
Method: EPA 3A
Span Conc. 20.1 %

Bias Results

Standard Gas	Cal. %	Response mv	Bias %	Difference %	Error %	Status
Zero	0.0	12	0.0	0.0	0.0 ✓	Pass
Span	10.1	124	10.0	-0.1	-0.5 ✓	Pass

Calibration Drift

Standard Gas	Initial* %	Final mv	Final %	Difference %	Drift %	Status
Zero	0.0	12	0.0	0.0	0.0 ✓	Pass
Span	10.2	124	10.0	-0.2	-1.0 ✓	Pass

*Bias No. 2

✓✓✓

BIAS AND CALIBRATION DRIFT

Number 3

Client: **Bowater**
Location: **Catawba, SC**
Source: **No. 3 Recovery**

Calibration **1**

Project Number: **03917.008.015**
Operator: **T. Simpkins**
Date: **7 Apr 2010**

Start Time: 16:47

CO
Method: EPA 10
Span Conc. 852 ppm

Bias Results

Standard Gas	Cal. ppm	Response mv	Bias ppm	Difference ppm	Error %	Status
Zero	4	57	7	3	0.4	Pass
Span	447	499	431	-16	-1.9	Pass

Calibration Drift

Standard Gas	Initial* ppm	Final mv	Final ppm	Difference ppm	Drift %	Status
Zero	5	57	7	2	0.2	Pass
Span	430	499	431	1	0.1	Pass

*Bias No. 2

NO_x
Method: EPA 7E
Span Conc. 253 ppm

Bias Results

Standard Gas	Cal. ppm	Response mv	Bias ppm	Difference ppm	Error %	Status
Zero	-2	6	-2	0	0.0	Pass
Span	128	4134	124	-4	-1.6	Pass

Calibration Drift

Standard Gas	Initial* ppm	Final mv	Final ppm	Difference ppm	Drift %	Status
Zero	-1	6	-2	-1	-0.4	Pass
Span	123	4134	124	1	0.4	Pass

*Bias No. 2

BIAS AND CALIBRATION DRIFT

Number 3

Client: **Bowater**
Location: **Catawba, SC**
Source: **No. 3 Recovery**

Calibration **1**

Project Number: **03917.008.015**
Operator: **T. Simpkins**
Date: **7 Apr 2010**

Start Time: 16:47

SO_2
Method: EPA 6C
Span Conc. 92.3 ppm

Bias Results

Standard Gas	Cal. ppm	Response mv	Bias ppm	Difference ppm	Error %	Status
Zero	-0.4	93	0.4	0.8	0.9 ✓	Pass
Span	46.8	4516	44.5	-2.3	-2.5 ✓	Pass

Calibration Drift

Standard Gas	Initial* ppm	Final mv	Final ppm	Difference ppm	Drift %	Status
Zero	0.4	93	0.4	0.0	0.0	Pass
Span	45.1	4516	44.5	-0.6	-0.7 ✓	Pass

*Bias No. 2

BIAS AND CALIBRATION DRIFT

Number 4

Client: **Bowater**
Location: **Catawba, SC**
Source: **No. 3 Recovery**

Calibration **1**

Project Number: **03917.008.015**
Operator: **T. Simpkins**
Date: **7 Apr 2010**

Start Time: 18:24

O_2
Method: EPA 3A
Span Conc. 20.2 %

Bias Results

Standard Gas	Cal. %	Response mv	Bias %	Difference %	Error %	Status
Zero	0.0	22	0.2	0.2	1.0	Pass
Span	10.2	410	10.1	-0.1	-0.5	Pass

Calibration Drift

Standard Gas	Initial* %	mv	Final %	Difference %	Drift %	Status
Zero	0.2	22	0.2	0.0	0.0	Pass
Span	10.0	410	10.1	0.1	0.5	Pass

*Bias No. 3

CO_2
Method: EPA 3A
Span Conc. 20.1 %

Bias Results

Standard Gas	Cal. %	Response mv	Bias %	Difference %	Error %	Status
Zero	0.0	16	0.4	0.4	2.0	Pass
Span	10.1	126	10.2	0.1	0.5	Pass

Calibration Drift

Standard Gas	Initial* %	mv	Final %	Difference %	Drift %	Status
Zero	0.0	16	0.4	0.4	2.0	Pass
Span	10.0	126	10.2	0.2	1.0	Pass

*Bias No. 3

✓N✓

BIAS AND CALIBRATION DRIFT

Number 4

Client: **Bowater**
Location: **Catawba, SC**
Source: **No. 3 Recovery**

Calibration **1**

Project Number: **03917.008.015**
Operator: **T. Simpkins**
Date: **7 Apr 2010**

Start Time: 18:24

CO
Method: EPA 10
Span Conc. 852 ppm

Bias Results

Standard Gas	Cal. ppm	Response mv	Bias ppm	Difference ppm	Error %	Status
Zero	4	55	5	1	0.1	Pass
Span	447	499	431	-16	-1.9	Pass

Calibration Drift

Standard Gas	Initial* ppm	mv	Final ppm	Difference ppm	Drift %	Status
Zero	7	55	5	-2	-0.2	Pass
Span	431	499	431	0	0.0	Pass

*Bias No. 3

NO_x
Method: EPA 7E
Span Conc. 253 ppm

Bias Results

Standard Gas	Cal. ppm	Response mv	Bias ppm	Difference ppm	Error %	Status
Zero	-2	15	-1	1	0.4	Pass
Span	128	4106	123	-5	-2.0	Pass

Calibration Drift

Standard Gas	Initial* ppm	mv	Final ppm	Difference ppm	Drift %	Status
Zero	-2	15	-1	1	0.4	Pass
Span	124	4106	123	-1	-0.4	Pass

*Bias No. 3

BIAS AND CALIBRATION DRIFT

Number 4

Client: **Bowater**
Location: **Catawba, SC**
Source: **No. 3 Recovery**

Calibration **1**

Project Number: **03917.008.015**
Operator: **T. Simpkins**
Date: **7 Apr 2010**

Start Time: 18:24

SO_2
Method: EPA 6C
Span Conc. 92.3 ppm

Bias Results

Standard Gas	Cal. ppm	Response mv	Bias ppm	Difference ppm	Error %	Status
Zero	-0.4	103	0.5	0.9	1.0	Pass
Span	46.8	4693	46.3	-0.5	-0.5	Pass

Calibration Drift

Standard Gas	Initial* ppm	Final mv	Final ppm	Difference ppm	Drift %	Status
Zero	0.4	103	0.5	0.1	0.1	Pass
Span	44.5	4693	46.3	1.8	2.0	Pass

*Bias No. 3

JNV

CALIBRATION DATA

Number 1

Client: **Bowater**
Location: **Catawba, SC**
Source: **No. 3 Recovery**

Project Number: **03917.008.015**
Operator: **T. Simpkins**
Date: **7 Apr 2010**

Start Time: 10:49

O_2
Method: EPA 3A
Calibration Type: Linear Regression

Calibration Results

%	Cylinder ID	Result, mv
Zero	-	14
10.2	CC42605	413
20.2	XC025060B	810

Curve Coefficients

Slope	Intercept	Corr. Coeff.
39.40	13	>0.9999

CO_2
Method: EPA 3A
Calibration Type: Linear Regression

Calibration Results

%	Cylinder ID	Result, mv
Zero	-	12
10.2	CC42605	125
20.1	XC025060B	237

Curve Coefficients

Slope	Intercept	Corr. Coeff.
11.22	12	>0.9999

CALIBRATION DATA

Number 1

Client: **Bowater**
Location: **Catawba, SC**
Source: **No. 3 Recovery**

Project Number: **03917.008.015**
Operator: **T. Simpkins**
Date: **7 Apr 2010**

Start Time: 10:49

CO

Method: EPA 10
Calibration Type: Linear Regression

Calibration Results

ppm	Cylinder ID	Result, mv
Zero	-	54
456	CC125113	516
852	XC029560B	943

Curve Coefficients

Slope	Intercept	Corr. Coeff.
1.043 ✓	50 ✓	0.9998 ✓

NO_x

Method: EPA 7E
Calibration Type: Linear Regression

Calibration Results

ppm	Cylinder ID	Result, mv
Zero	-	3
125	CC244787	4288
253	CC259032	8348

Curve Coefficients

Slope	Intercept	Corr. Coeff.
32.98 ✓	58 ✓	0.9997 ✓

✓✓✓

WESTON SOLUTIONS

CALIBRATION DATA

Number 1

Client: **Bowater**
Location: **Catawba, SC**
Source: **No. 3 Recovery**

Project Number: **03917.008.015**
Operator: **T. Simpkins**
Date: **7 Apr 2010**

Start Time: 10:49

SO_2
Method: EPA 6C
Calibration Type: Linear Regression

Calibration Results

ppm	Cylinder ID	Result, mv
Zero	-	6
47.2	CC156791	4747
92.3	SG9112476BAL	9267

Curve Coefficients

Slope	Intercept	Corr. Coeff.
100.3 ✓	8 ✓	>0.9999 ✓

CALIBRATION ERROR DATA

Number 1

Client: **Bowater**
Location: **Catawba, SC**
Source: **No. 3 Recovery**

Calibration **1**

Project Number: **03917.008.015**
Operator: **T. Simpkins**
Date: **7 Apr 2010**

Start Time: 10:49

O_2
Method: EPA 3A
Span Conc. 20.2 %
Slope 39.40 **Intercept** 13.0

Standard %	Response mv	Result %	Difference %	Error %	Status
Zero	14	0.0	0.0	0.0	Pass
10.2	413	10.2	0.0	0.0	Pass
20.2	810	20.2	0.0	0.0	Pass

CO_2
Method: EPA 3A
Span Conc. 20.1 %
Slope 11.22 **Intercept** 11.5

Standard %	Response mv	Result %	Difference %	Error %	Status
Zero	12	0.0	0.0	0.0	Pass
10.2	125	10.1	-0.1	-0.5	Pass
20.0	237	20.1	0.1	0.5	Pass

CO
Method: EPA 10
Span Conc. 852 ppm
Slope 1.043 **Intercept** 50

Standard ppm	Response mv	Result ppm	Difference ppm	Error %	Status
Zero	54	4	4	0.5	Pass
456	516	447	-9	-1.1	Pass
852	943	857	5	0.6	Pass

CALIBRATION ERROR DATA

Number 1

Client: **Bowater**
Location: **Catawba, SC**
Source: **No. 3 Recovery**

Calibration **1**

Project Number: **03917.008.015**
Operator: **T. Simpkins**
Date: **7 Apr 2010**

Start Time: 10:49

NO_x
Method: EPA 7E
Span Conc. 253 ppm
Slope 32.98 **Intercept** 58

Standard ppm	Response mv	Result ppm	Difference ppm	Error %	Status
Zero	3	-2	-2	-0.8	Pass
125	4288	128	3	1.2	Pass
253	8348	251	-2	-0.8	Pass

SO_2
Method: EPA 6C
Span Conc. 92.3 ppm
Slope 100.4 **Intercept** 48.4

Standard ppm	Response mv	Result ppm	Difference ppm	Error %	Status
Zero	6	-0.4	-0.4	-0.4	Pass
47.2	4747	46.8	-0.4	-0.4	Pass
92.3	9267	91.9	-0.4	-0.4	Pass

METHODS AND ANALYZERS

Client: **Bowater**
Location: **Catawba, SC**
Source: **No. 3 Recovery**

Project Number: **03917.008.015**
Operator: **T. Simpkins**
Date: **7 Apr 2010**

File: C:\Data\Bowater- Catawba, SC\2010 Compliance CEM files\No. 3 Recovery.cem
Computer: WSAUB60 **Trailer:** 261
Analog Input Device: Keithley KPCMCIA 16AI

Channel 1

Analyte	**O_2**
Method	**EPA 3A**, Using Bias
Analyzer Make, Model & Serial No.	**Servomex 1440; SN 0144001/4303**
Full-Scale Output, mv	**1000**
Analyzer Range, %	**25.0**
Span Concentration, %	**20.2**

Channel 2

Analyte	**CO_2**
Method	**EPA 3A**, Using Bias
Analyzer Make, Model & Serial No.	**Servomex 1440; SN 0144001/4303**
Full-Scale Output, mv	**1000**
Analyzer Range, %	**25.0**
Span Concentration, %	**20.1**

Channel 3

Analyte	**CO**
Method	**EPA 10**, Using Bias
Analyzer Make, Model & Serial No.	**FUJI 3300 S/N N1A5121T**
Full-Scale Output, mv	**1000**
Analyzer Range, ppm	**1000**
Span Concentration, ppm	**852**

Channel 4

Analyte	**NO_x**
Method	**EPA 7E**, Using Bias
Analyzer Make, Model & Serial No.	**CAI 400CLD S/N 6N06002**
Full-Scale Output, mv	**10000**
Analyzer Range, ppm	**300**
Span Concentration, ppm	**253**

Channel 5

Analyte	**SO_2**
Method	**EPA 6C**, Using Bias
Analyzer Make, Model & Serial No.	**Ametak 721M; AZ 721 M 9011-1**
Full-Scale Output, mv	**10000**
Analyzer Range, ppm	**100**
Span Concentration, ppm	**92.3**

APPENDIX H
LABORATORY DATA

CLIENT	: Bowater	Balance ID:	Hans
WESTON W.O. No.	: 03917.008.015	Density of Acetone (g/mL):	0.7848
Date Received	: 1 April 2010	Lab Ambient Temp (F):	68.7
Analyst	: TS	Lab Rel Humidity (%):	48
		Barometric Pressure (Hg):	29.41

Source	**No. 1 Combination Boiler**			
Field Run No.	**ONE**	**TWO**	**THREE**	**FIELD BLANK**
LIQUID FRACTION				
Probe Wash ID	**DA 1482**	**DA 1483**	**DA 1484**	**DA 1486**
Beaker ID	33-03	34-03	35-03	36-03
Liquid Volume (mL)	150	150	125	200
Initial Beaker Weights (g)				
Weight #1	100.9905	104.2726	100.3455	119.9097
Weight #2	100.9904	104.2722	100.3450	119.9095
Average Initial Weight (g)	**100.9905**	**104.2724**	**100.3453**	**119.9096**
Final Beaker Weights (g)				
Weight #1	101.0657	104.3091	100.3638	119.9075
Weight #2	101.0656	104.3091	100.3642	119.9078
Average Final Weight (g)	**101.0657**	**104.3091**	**100.3640**	**119.9077**
Final-Initial Beaker Wts. (g)	0.0752	0.0367	0.0187	-0.0019
Sample/Blank Volume Ratio	0.7500	0.7500	0.6250	
Liquid Blank Correction (g)	-0.0019	-0.0019	-0.0019	
Liquid Particulate Weight (g)	**0.0771**	**0.0386**	**0.0206**	**-0.0019**
FILTER FRACTION				
Filter ID	**DA 1482**	**DA 1483**	**DA 1484**	**DA 1486**
Initial Filter Weights (g)				
Weight #1	0.3961	0.3947	0.3950	0.4332
Weight #2	0.3957	0.3944	0.3950	0.4333
Average Initial Weight (g)	**0.3959**	**0.3946**	**0.3950**	**0.4333**
Final Filter Weights (g)				
Weight #1	0.5435	0.4785	0.4968	0.4332
Weight #2	0.5438	0.4786	0.4970	0.4333
Average Final Weight (g)	**0.5437**	**0.4786**	**0.4969**	**0.4333**
Final-Initial Filter Wts. (g)	0.1478	0.0840	0.1019	0.0000
Filter Blank (g)	0.0000	0.0000	0.0000	
Filter Particulate Weight (g)	**0.1478**	**0.0840**	**0.1019**	
SUMMARY				
Filter Particulate Weight (g)	**0.1478**	**0.0840**	**0.1019**	
Liquid Particulate Weight (g)	**0.0771**	**0.0386**	**0.0206**	
Net Particulate Weight (g)	**0.2249**	**0.1226**	**0.1225**	

Sample Recovery Solution **Acetone**

Weight Percent of Blank **-0.0012%**

Liquid Fraction

Note: If the blank liquid fraction has a residue weight percent of greater than 0.001 percent, then the samples are not blank corrected.

CLIENT	: Bowater	Balance ID:	Hans
WESTON W.O. No.	: 03917.008.015	Density of Acetone (g/mL):	0.7848
Date Received	: 6 April 2010	Lab Ambient Temp (F):	68.7
Analyst	: TS	Lab Rel Humidity (%):	48
		Barometric Pressure (Hg):	29.55

Source	**No. 2 Combination Boiler**			
Field Run No.	**ONE**	**TWO**	**THREE**	**FIELD BLANK**
LIQUID FRACTION				
Probe Wash ID	**DA 1465**	**DA 1466**	**DA 1467**	**DA 1486**
Beaker ID	14-03	15-03	16-03	36-03
Liquid Volume (mL)	150	150	125	200
Initial Beaker Weights (g)				
Weight #1	106.8528	103.9727	101.2795	119.9097
Weight #2	106.8526	103.9730	101.2798	119.9095
Average Initial Weight (g)	**106.8527**	**103.9729**	**101.2797**	**119.9096**
Final Beaker Weights (g)				
Weight #1	106.9409	104.0053	101.3089	119.9075
Weight #2	106.9409	104.0054	101.3090	119.9078
Average Final Weight (g)	**106.9409**	**104.0054**	**101.3090**	**119.9077**
Final-Initial Beaker Wts. (g)	0.0882	0.0325	0.0293	-0.0019
Sample/Blank Volume Ratio	0.7500	0.7500	0.6250	
Liquid Blank Correction (g)	-0.0019	-0.0019	-0.0019	
Liquid Particulate Weight (g)	**0.0901**	**0.0344**	**0.0312**	**-0.0019**
FILTER FRACTION				
Filter ID	**DA 1465**	**DA 1466**	**DA 1467**	**DA 1486**
Initial Filter Weights (g)				
Weight #1	0.4429	0.4437	0.4414	0.4332
Weight #2	0.4428	0.4437	0.4413	0.4333
Average Initial Weight (g)	**0.4429**	**0.4437**	**0.4414**	**0.4333**
Final Filter Weights (g)				
Weight #1	0.6282	0.5662	0.5319	0.4332
Weight #2	0.6285	0.5665	0.5320	0.4333
Average Final Weight (g)	**0.6284**	**0.5664**	**0.5320**	**0.4333**
Final-Initial Filter Wts. (g)	0.1855	0.1227	0.0906	0.0000
Filter Blank (g)	0.0000	0.0000	0.0000	
Filter Particulate Weight (g)	**0.1855**	**0.1227**	**0.0906**	
SUMMARY				
Filter Particulate Weight (g)	**0.1855**	**0.1227**	**0.0906**	
Liquid Particulate Weight (g)	**0.0901**	**0.0344**	**0.0312**	
Net Particulate Weight (g)	**0.2756**	**0.1571**	**0.1218**	

Sample Recovery Solution **Acetone**

Weight Percent of Blank **-0.0012%**

Liquid Fraction

Note: If the blank liquid fraction has a residue weight percent of greater than 0.001 percent, then the samples are not blank corrected.

CLIENT	: Bowater	Balance ID:	Hans
WESTON W.O. No.	: 03917.008.0015	Density of Acetone (g/mL):	0.7848
Date Received	: 30 March 2010	Lab Ambient Temp (F):	68.7
Analyst	: TS	Lab Rel Humidity (%):	48
		Barometric Pressure (Hg):	29.40

Source	**No. 2 Lime Kiln**			
Field Run No.	**ONE**	**TWO**	**THREE**	**FIELD BLANK**
LIQUID FRACTION				
Probe Wash ID	**DA 1475**	**DA 1476**	**DA 1477**	**DA 1486**
Beaker ID	25-03	26-03	27-03	32-03
Liquid Volume (mL)	80	65	85	200
Initial Beaker Weights (g)				
Weight #1	101.8573	118.8986	104.5934	112.7378
Weight #2	101.8568	118.8981	104.5934	112.7379
Average Initial Weight (g)	**101.8571**	**118.8984**	**104.5934**	**112.7379**
Final Beaker Weights (g)				
Weight #1	101.8646	118.9028	104.5997	112.7383
Weight #2	101.8646	118.9027	104.5995	112.7387
Average Final Weight (g)	**101.8646**	**118.9028**	**104.5996**	**112.7385**
Final-Initial Beaker Wts. (g)	0.0075	0.0044	0.0062	0.0006
Sample/Blank Volume Ratio	0.4000	0.3250	0.4250	
Liquid Blank Correction (g)	0.0002	0.0002	0.0003	
Liquid Particulate Weight (g)	**0.0073**	**0.0042**	**0.0059**	**0.0006**
FILTER FRACTION				
Filter ID	**DA 1475**	**DA 1476**	**DA 1477**	**DA 1486**
Initial Filter Weights (g)				
Weight #1	0.4438	0.4400	0.4429	0.4330
Weight #2	0.4436	0.4400	0.4430	0.4333
Average Initial Weight (g)	**0.4437**	**0.4400**	**0.4430**	**0.4332**
Final Filter Weights (g)				
Weight #1	0.4464	0.4424	0.4451	0.4332
Weight #2	0.4465	0.4426	0.4452	0.4333
Average Final Weight (g)	**0.4465**	**0.4425**	**0.4452**	**0.4333**
Final-Initial Filter Wts. (g)	0.0028	0.0025	0.0022	0.0001
Filter Blank (g)	0.0001	0.0001	0.0001	
Filter Particulate Weight (g)	**0.0028**	**0.0025**	**0.0022**	
SUMMARY				
Filter Particulate Weight (g)	**0.0028**	**0.0025**	**0.0022**	
Liquid Particulate Weight (g)	**0.0073**	**0.0042**	**0.0059**	
Net Particulate Weight (g)	**0.0101**	**0.0067**	**0.0081**	

Sample Recovery Solution **Water**

Weight Percent of Blank **0.0003%**

Liquid Fraction

Note: If the blank liquid fraction has a residue weight percent of greater than 0.001 percent, then the samples are not blank corrected.

CLIENT	: Bowater	Balance ID:	Hans
WESTON W.O. No.	: 03917.008.015	Density of Acetone (g/mL):	0.7848
Date Received	: 31 March 2010	Lab Ambient Temp (F):	68.7
Analyst	: TS	Lab Rel Humidity (%):	48
		Barometric Pressure (Hg):	29.41

Source	**No. 2 Recovery**			
Field Run No.	**ONE**	**TWO**	**THREE**	**FIELD BLANK**
LIQUID FRACTION				
Probe Wash ID	**DA 1478**	**DA 1479**	**DA 1480**	**DA 1486**
Beaker ID	28-03	29-03	30-03	32-03
Liquid Volume (mL)	100	120	125	200
Initial Beaker Weights (g)				
Weight #1	109.9709	108.3867	102.5345	112.7378
Weight #2	109.9711	108.3864	102.5340	112.7379
Average Initial Weight (g)	**109.9710**	**108.3866**	**102.5343**	**112.7379**
Final Beaker Weights (g)				
Weight #1	109.9733	108.3883	102.5429	112.7383
Weight #2	109.9737	108.3888	102.5428	112.7387
Average Final Weight (g)	**109.9735**	**108.3886**	**102.5429**	**112.7385**
Final-Initial Beaker Wts. (g)	0.0025	0.0020	0.0086	0.0006
Sample/Blank Volume Ratio	0.5000	0.6000	0.6250	
Liquid Blank Correction (g)	0.0003	0.0004	0.0004	
Liquid Particulate Weight (g)	**0.0022**	**0.0016**	**0.0082**	**0.0006**
FILTER FRACTION				
Filter ID	**DA 1478**	**DA 1479**	**DA 1480**	**DA 1486**
Initial Filter Weights (g)				
Weight #1	0.4412	0.3957	0.3944	0.4330
Weight #2	0.4408	0.3955	0.3942	0.4333
Average Initial Weight (g)	**0.4410**	**0.3956**	**0.3943**	**0.4332**
Final Filter Weights (g)				
Weight #1	0.4448	0.3980	0.3950	0.4332
Weight #2	0.4442	0.3984	0.3952	0.4333
Average Final Weight (g)	**0.4445**	**0.3982**	**0.3951**	**0.4333**
Final-Initial Filter Wts. (g)	0.0035	0.0026	0.0008	0.0001
Filter Blank (g)	0.0001	0.0001	0.0001	
Filter Particulate Weight (g)	**0.0035**	**0.0026**	**0.0008**	
SUMMARY				
Filter Particulate Weight (g)	**0.0035**	**0.0026**	**0.0008**	
Liquid Particulate Weight (g)	**0.0022**	**0.0016**	**0.0082**	
Net Particulate Weight (g)	**0.0057**	**0.0042**	**0.0090**	

Sample Recovery Solution **Water**

Weight Percent of Blank **0.0003%**

Liquid Fraction

Note: If the blank liquid fraction has a residue weight percent of greater than 0.001 percent, then the samples are not blank corrected.

CLIENT	: Bowater	Balance ID:	Hans
WESTON W.O. No.	: 03917.008.015	Density of Acetone (g/mL):	0.7848
Date Received	: 31 March 2010	Lab Ambient Temp (F):	68.7
Analyst	: TS	Lab Rel Humidity (%):	48
		Barometric Pressure (Hg):	29.41

Source	**No. 2 Recovery**			
Field Run No.	**FOUR**	**TWO**	**THREE**	**FIELD BLANK**
LIQUID FRACTION				
Probe Wash ID	**DA 1481**			**DA 1486**
Beaker ID	31-03			32-03
Liquid Volume (mL)	125			200
Initial Beaker Weights (g)				
Weight #1	106.5066			112.7378
Weight #2	106.5062			112.7379
Average Initial Weight (g)	**106.5064**	**0.0000**	**0.0000**	**112.7379**
Final Beaker Weights (g)				
Weight #1	106.5066			112.7383
Weight #2	106.5062			112.7387
Average Final Weight (g)	**106.5064**	**0.0000**	**0.0000**	**112.7385**
Final-Initial Beaker Wts. (g)	0.0000	0.0000	0.0000	0.0006
Sample/Blank Volume Ratio	0.6250	0.0000	0.0000	
Liquid Blank Correction (g)	0.0004	0.0000	0.0000	
Liquid Particulate Weight (g)	**-0.0004**	**0.0000**	**0.0000**	**0.0006**
FILTER FRACTION				
Filter ID	**DA 1481**	**0**	**0**	**DA 1486**
Initial Filter Weights (g)				
Weight #1	0.3954			0.4330
Weight #2	0.3953			0.4333
Average Initial Weight (g)	**0.3954**	**0.0000**	**0.0000**	**0.4332**
Final Filter Weights (g)				
Weight #1	0.3975			0.4332
Weight #2	0.3972			0.4333
Average Final Weight (g)	**0.3974**	**0.0000**	**0.0000**	**0.4333**
Final-Initial Filter Wts. (g)	0.0020	0.0000	0.0000	0.0001
Filter Blank (g)	0.0001	0.0001	0.0001	
Filter Particulate Weight (g)	**0.0020**	**0.0000**	**0.0000**	
SUMMARY				
Filter Particulate Weight (g)	**0.0020**	**0.0000**	**0.0000**	
Liquid Particulate Weight (g)	**-0.0004**	**0.0000**	**0.0000**	
Net Particulate Weight (g)	**0.0016**	**0.0000**	**0.0000**	

Sample Recovery Solution **Water**

Weight Percent of Blank **0.0003%**

Liquid Fraction

Note: If the blank liquid fraction has a residue weight percent of greater than 0.001 percent, then the samples are not blank corrected.

CLIENT	: Bowater	Balance ID:	Mettler AE163
WESTON W.O. No.	: 03917.008.015	Density of Acetone (g/mL):	0.7848
Date Received	: 7 April 2010	Lab Ambient Temp (F):	68.7
Analyst	: TS	Lab Rel Humidity (%):	48
		Barometric Pressure (Hg):	29.46

Source	**No. 3 Recovery**			
Field Run No.	**ONE**	**TWO**	**THREE**	**FIELD BLANK**
LIQUID FRACTION				
Probe Wash ID	**DA 1485**	**DA 1469**	**DA 1470**	**DA 1486**
Beaker ID	17-03	18-03	19-03	32-03
Liquid Volume (mL)	125	125	120	200
Initial Beaker Weights (g)				
Weight #1	101.9771	106.3348	101.5152	112.7378
Weight #2	101.9772	106.3352	101.5155	112.7379
Average Initial Weight (g)	**101.9772**	**106.3350**	**101.5154**	**112.7379**
Final Beaker Weights (g)				
Weight #1	101.9926	106.3490	101.5274	112.7383
Weight #2	101.9923	106.3492	101.5270	112.7387
Average Final Weight (g)	**101.9925**	**106.3491**	**101.5272**	**112.7385**
Final-Initial Beaker Wts. (g)	0.0153	0.0141	0.0118	0.0006
Sample/Blank Volume Ratio	0.6250	0.6250	0.6000	
Liquid Blank Correction (g)	0.0004	0.0004	0.0004	
Liquid Particulate Weight (g)	**0.0149**	**0.0137**	**0.0114**	**0.0006**
FILTER FRACTION				
Filter ID	**DA 1485**	**DA 1469**	**DA 1470**	**DA 1486**
Initial Filter Weights (g)				
Weight #1	0.3980	0.4426	0.4268	0.4330
Weight #2	0.3982	0.4423	0.4263	0.4333
Average Initial Weight (g)	**0.3981**	**0.4425**	**0.4266**	**0.4332**
Final Filter Weights (g)				
Weight #1	0.4374	0.4784	0.4710	0.4332
Weight #2	0.4376	0.4785	0.4707	0.4333
Average Final Weight (g)	**0.4375**	**0.4785**	**0.4709**	**0.4333**
Final-Initial Filter Wts. (g)	0.0394	0.0360	0.0443	0.0001
Filter Blank (g)	0.0001	0.0001	0.0001	
Filter Particulate Weight (g)	**0.0394**	**0.0360**	**0.0443**	
SUMMARY				
Filter Particulate Weight (g)	**0.0394**	**0.0360**	**0.0443**	
Liquid Particulate Weight (g)	**0.0149**	**0.0137**	**0.0114**	
Net Particulate Weight (g)	**0.0543**	**0.0497**	**0.0557**	

Sample Recovery Solution **Water**

Weight Percent of Blank **0.0003%**

Liquid Fraction

Note: If the blank liquid fraction has a residue weight percent of greater than 0.001 percent, then the samples are not blank corrected.

APPENDIX I
QUALITY CONTROL DATA

EQUIPMENT CALIBRATIONS

03917.008.015

Equipment calibrations will be maintained on file at WESTON.

NO_x CONVERTER EFFICIENCY

NOx CONVERTER EFFICIENCY

Number 1

Client: **Bowater**
Location: **Catawba, SC**
Source: **No. 2 Lime Kiln**

Calibration **1**

Project Number: **03917.008.015**
Operator: **T. Simpkins**
Date: **30 Mar 2010**

Start Time: 11:00

NO_2 Standard: 98.4 ppm, Cylinder CC162262, Expires 3-15-2012

NO_x
Analyzer: CAI 400CLD S/N 6N06002

Time	mv	ppm	Status
11:01	3046	94.5	Pass
11:02	3058	94.9	Pass
11:03	3073	95.4	Pass
Avg		**94.9**	**Pass**

NOx CONVERTER EFFICIENCY

Number 1

Client: **Bowater**
Location: **Catawba, SC**
Source: **No. 3 Recovery**

Calibration **1**

Project Number: **03917.008.015**
Operator: **T. Simpkins**
Date: **7 Apr 2010**

Start Time: 19:21

NO_2 Standard: 98.4 ppm, Cylinder CC162262, Expires 3-15-2012

NO_x
Analyzer: CAI 400CLD S/N 6N06002

Time	mv	ppm	Status
19:22	3168	94.3	Pass
19:23	3224	96.0	Pass
19:24	3254	96.9	Pass
Avg		**95.8**	**Pass**

CALIBRATION GAS CERTIFICATES

Airgas

Airgas Specialty Gases
1075 Cinclare Drive
Port Allen, LA 70767
225.388.0900
FAX: 225.388.0959
www.airgas.com

CERTIFICATE OF ANALYSIS
Grade of Product: EPA Protocol

Part Number:	E03NI80E15A0138	Reference Number:	83-124201237-4
Cylinder Number:	CC42605	Cylinder Volume:	151 Cu.Ft.
Laboratory:	ASG - Port Allen - LA	Cylinder Pressure:	2015 PSIG
Analysis Date:	Dec 18, 2009	Valve Outlet:	590

Expiration Date: Dec 18, 2012

Certification performed in accordance with "EPA Traceability Protocol (Sept. 1997)" using the assay procedures listed. Analytical Methodology does not require correction for analytical interferences. This cylinder has a total analytical uncertainty as stated below with a confidence level of 95%. There are no significant impurities which affect the use of this calibration mixture. All concentrations are on a volume/volume basis unless otherwise noted.
Do Not Use This Cylinder below 150 psig.i.e. 1 Mega Pascal

ANALYTICAL RESULTS

Component	Requested Concentration	Actual Concentration	Protocol Method	Total Relative Uncertainty
CARBON DIOXIDE	10.00 %	10.18 %	G1	+/- 1% NIST Traceable
OXYGEN	10.00 %	10.19 %	G1	+/- 1% NIST Traceable
NITROGEN	Balance			

CALIBRATION STANDARDS

Type	Lot ID	Cylinder No	Concentration	Expiration Date
NTRM	06060821	CC207958	22.51% OXYGEN/NITROGEN	May 01, 2010
NTRM	97051008	SG9199013BAL	10.818% CARBON DIOXIDE/NITROGEN	May 15, 2012

ANALYTICAL EQUIPMENT

Instrument/Make/Model	Analytical Principle	Last Multipoint Calibration
SCO2GM	NonDispersive Infrared	Dec 10, 2009
HO2GH	PMO2	Dec 09, 2009

Triad Data Available Upon Request

Notes:

MLB 12/18/09

QA Approval

Airgas

CERTIFICATE OF ANALYSIS
Grade of Product: EPA Protocol

Airgas Specialty Gases
1075 Cinclare Drive
Port Allen, LA 70767
225.388.0900
FAX: 225.388.0959
www.airgas.com

Part Number:	E03NI60E15A0286	Reference Number:	83-124191025-21
Cylinder Number:	XC025060B	Cylinder Volume:	160 Cu.Ft.
Laboratory:	ASG - Port Allen - LA	Cylinder Pressure:	2015 PSIG
Analysis Date:	Sep 18, 2009	Valve Outlet:	590

Expiration Date: Sep 18, 2012

Certification performed in accordance with "EPA Traceability Protocol (Sept. 1997)" using the assay procedures listed. Analytical Methodology does not require correction for analytical interferences. This cylinder has a total analytical uncertainty as stated below with a confidence level of 95%. There are no significant impurities which affect the use of this calibration mixture. All concentrations are on a volume/volume basis unless otherwise noted.
Do Not Use This Cylinder below 150 psig.i.e. 1 Mega Pascal

ANALYTICAL RESULTS

Component	Requested Concentration	Actual Concentration	Protocol Method	Total Relative Uncertainty
CARBON DIOXIDE	20.00 %	20.05 %	G1	+/- 1% NIST Traceable
OXYGEN	20.00 %	20.20 %	G1	+/- 1% NIST Traceable
NITROGEN	Balance			

CALIBRATION STANDARDS

Type	Lot ID	Cylinder No	Concentration	Expiration Date
NTRM	06060821	CC207958	22.51% OXYGEN/NITROGEN	May 01, 2010
NTRM	080613	cc255545	20.09% CARBON DIOXIDE/NITROGEN	Jul 15, 2012

ANALYTICAL EQUIPMENT

Instrument/Make/Model	Analytical Principle	Last Multipoint Calibration
SCO2GM	NonDispersive Infrared	Aug 21, 2009
HO2GH	PMO2	Aug 19, 2009

Triad Data Available Upon Request

Notes:

QA Approval

Airgas

Airgas Specialty Gases
1075 Cinclare Drive
Port Allen, LA 70767
225.388.0900
FAX: 225.388.0959
www.airgas.com

CERTIFICATE OF ANALYSIS
Grade of Product: EPA Protocol

Part Number:	E02NI99E15A0499	Reference Number:	83-124170019-2
Cylinder Number:	CC125113	Cylinder Volume:	144 Cu.Ft.
Laboratory:	ASG - Port Allen - LA	Cylinder Pressure:	2015 PSIG
Analysis Date:	Mar 23, 2009	Valve Outlet:	350

Expiration Date: Mar 23, 2012

Certification performed in accordance with "EPA Traceability Protocol (Sept. 1997)" using the assay procedures listed. Analytical Methodology does not require correction for analytical interferences. This cylinder has a total analytical uncertainty as stated below with a confidence level of 95%. There are no significant impurities which affect the use of this calibration mixture. All concentrations are on a volume/volume basis unless otherwise noted.
Do Not Use This Cylinder below 150 psig,i.e. 1 Mega Pascal

ANALYTICAL RESULTS

Component	Requested Concentration	Actual Concentration	Protocol Method	Total Relative Uncertainty
CARBON MONOXIDE	450.0 PPM	456.2 PPM	G1	+/- 1% NIST Traceable
NITROGEN	Balance			

CALIBRATION STANDARDS

Type	Lot ID	Cylinder No	Concentration	Expiration Date
NTRM	08060423	CC255481	1002.4PPM CARBON MONOXIDE/NITROGEN	Apr 15, 2012

ANALYTICAL EQUIPMENT

Instrument/Make/Model	Analytical Principle	Last Multipoint Calibration
FTIRHCO	FTIR	Mar 18, 2009

Triad Data Available Upon Request

Notes:

QA Approval

Airgas

Airgas Specialty Gases
1075 Cinclare Drive
Port Allen, LA 70767
225.388.0900
FAX: 225.388.0959
www.airgas.com

CERTIFICATE OF ANALYSIS
Grade of Product: EPA Protocol

Part Number:	E02NI99E15A0612	Reference Number:	83-124191647-7A
Cylinder Number:	XC029560B	Cylinder Volume:	144 Cu.Ft.
Laboratory:	ASG - Port Allen - LA	Cylinder Pressure:	2015 PSIG
Analysis Date:	Oct 09, 2009	Valve Outlet:	350

Expiration Date: Oct 09, 2012

Certification performed in accordance with "EPA Traceability Protocol (Sept. 1997)" using the assay procedures listed. Analytical Methodology does not require correction for analytical interferences. This cylinder has a total analytical uncertainty as stated below with a confidence level of 95%. There are no significant impurities which affect the use of this calibration mixture. All concentrations are on a volume/volume basis unless otherwise noted.
Do Not Use This Cylinder below 150 psig.i.e. 1 Mega Pascal

ANALYTICAL RESULTS

Component	Requested Concentration	Actual Concentration	Protocol Method	Total Relative Uncertainty
CARBON MONOXIDE	900.0 PPM	852.0 PPM	G1	+/- 1% NIST Traceable
NITROGEN	Balance			

CALIBRATION STANDARDS

Type	Lot ID	Cylinder No	Concentration	Expiration Date
NTRM	080604	cc255365	1002.4PPM CARBON MONOXIDE/NITROGEN	Apr 15, 2012

ANALYTICAL EQUIPMENT

Instrument/Make/Model	Analytical Principle	Last Multipoint Calibration
FTIR2HCO	FTIR	Oct 01, 2009

Triad Data Available Upon Request

Notes:

QA Approval

PRAXAIR

Praxair
5700 South Alameda Street
Los Angeles, CA 90058
Telephone: (323) 585-2154
Facsimile: (714) 542-6689

DocNumber: 00000008807

CERTIFICATE OF ANALYSIS / EPA PROTOCOL GAS

Customer & Order Information:

CHEROKEE INSTRUMENTS

Praxair Order Number: 07608243-00
Customer P. O. Number: 01610850
Customer Reference Number: WRAS

Fill Date:
Part Number: M NO125E-AS
Lot Number: 108826705
Cylinder Style & Outlet: AS 580
Cylinder Pressure & Volume: 2000 psi 140 cu ft

Certified Concentration:

Expiration Date:	10/9/2010		
Cylinder Number:	CC 204797		Analytical Uncertainty:
124	ppm	NITRIC OXIDE	± 1 %
Balance		NITROGEN	

NOx ppm = 125 ppm NOX Values for Reference Only

Certification Information: *Certification Date:* 10/9/2008 *Term:* 24 Months *Expiration Date:* 10/9/2010

This cylinder was certified according to the 1997 EPA Traceability Protocol, Document #EPA-600/R-97/121, using Procedure G1

Do Not Use this Standard if Pressure is less than 150 PSIG

Analytical Data: (R=Reference Standard, Z=Zero Gas, C=Gas Candidate)

1. Component: NITRIC OXIDE

Requested Concentration: 125 ppm
Certified Concentration: 124 ppm
Instrument Used: Thermo Electron 42 S/N 0726420412C
Analytical Method: Chemiluminescence
Last Multipoint Calibration: 9/12/2008

Reference Standard Type: GMS
Ref. Std. Cylinder #: CC 211769
Ref. Std. Conc: 249.2 ppm
Ref. Std. Traceable to SRM #: 1683b
SRM Sample #: 43-6-57
SRM Cylinder #: RF 2040

First Analysis Data:						Date: 9/30/2008
Z:	0	R:	249	C:	123.6	Conc: 124
R:	249	Z:	0	C:	123.8	Conc: 124
Z:	0	C:	123.8	R:	249	Conc: 124
MDL:	ppm			Mean Test Assay:		124 ppm

Second Analysis Data:						Date: 10/7/2008
Z:	0	R:	249	C:	123.7	Conc: 124
R:	249	Z:	0	C:	123.8	Conc: 124
Z:	0	C:	123.7	R:	249	Conc: 124
MDL:	ppm			Mean Test Assay:		124 ppm

Analyzed by: [illegible] Certified by: Jack [illegible]

Information contained herein has been prepared at your request by qualified experts within Praxair Distribution, Inc. While we believe that the information is accurate within the limits of the analytical methods employed and is complete to the extent of the specific analyses performed, we make no warranty or representation as to the suitability of the use of the information for any purpose. The information is offered with the understanding that any use of the information is at the sole discretion and risk of the user. In no event shall the liability of Praxair Distribution, Inc., arising out of the use of the information can listed herein exceed the fee established for providing such information.

Making Our Planet More Productive

Airgas

Airgas Specialty Gases
1075 Cinclare Drive
Port Allen, LA 70767
225.388.0900
FAX: 225.388.0959
www.airgas.com

CERTIFICATE OF ANALYSIS
Grade of Product: EPA Protocol

Part Number:	E02NI99E15A3614	Reference Number:	83-124170019-3
Cylinder Number:	CC259032	Cylinder Volume:	144 Cu.Ft.
Laboratory:	ASG - Port Allen - LA	Cylinder Pressure:	2015 PSIG
Analysis Date:	Mar 24, 2009	Valve Outlet:	660

Expiration Date: Mar 24, 2011

Certification performed in accordance with "EPA Traceability Protocol (Sept. 1997)" using the assay procedures listed. Analytical Methodology does not require correction for analytical interferences. This cylinder has a total analytical uncertainty as stated below with a confidence level of 95%. There are no significant impurities which affect the use of this calibration mixture. All concentrations are on a volume/volume basis unless otherwise noted.
Do Not Use This Cylinder below 150 psig.i.e. 1 Mega Pascal

ANALYTICAL RESULTS

Component	Requested Concentration	Actual Concentration	Protocol Method	Total Relative Uncertainty
NITRIC OXIDE	250.0 PPM	250.4 PPM	G1	+/- 1% NIST Traceable
NITROGEN	Balance			
Total oxides of nitrogen		253.0 PPM		For Reference Only

CALIBRATION STANDARDS

Type	Lot ID	Cylinder No	Concentration	Expiration Date
NTRM	060603	CC206072	490PPM NITRIC OXIDE/NITROGEN	Jan 01, 2010

ANALYTICAL EQUIPMENT

Instrument/Make/Model	Analytical Principle	Last Multipoint Calibration
FTIRMNO	FTIR	Mar 04, 2009

Triad Data Available Upon Request

Notes:

QA Approval

Airgas

Airgas Specialty Gases
1075 Cinclare Drive
Port Allen, LA 70767
225.388.0900
FAX: 225.388.0959
www.airgas.com

CERTIFICATE OF ANALYSIS
Grade of Product: EPA Protocol

Part Number:	E02NI99E15A0154	Reference Number:	83-124175924-2
Cylinder Number:	CC156791	Cylinder Volume:	144 Cu.Ft.
Laboratory:	ASG - Port Allen - LA	Cylinder Pressure:	2015 PSIG
Analysis Date:	May 13, 2009	Valve Outlet:	660

Expiration Date: May 13, 2011

Certification performed in accordance with "EPA Traceability Protocol (Sept. 1997)" using the assay procedures listed. Analytical Methodology does not require correction for analytical interferences. This cylinder has a total analytical uncertainty as stated below with a confidence level of 95%. There are no significant impurities which affect the use of this calibration mixture. All concentrations are on a volume/volume basis unless otherwise noted.
Do Not Use This Cylinder below 150 psig.i.e. 1 Mega Pascal

ANALYTICAL RESULTS

Component	Requested Concentration	Actual Concentration	Protocol Method	Total Relative Uncertainty
SULFUR DIOXIDE	45.00 PPM	47.20 PPM	G1	+/- 1% NIST Traceable
NITROGEN	Balance			

CALIBRATION STANDARDS

Type	Lot ID	Cylinder No	Concentration	Expiration Date
NTRM	060613	CC207437	45.91PPM SULFUR DIOXIDE/NITROGEN	Sep 01, 2010

ANALYTICAL EQUIPMENT

Instrument/Make/Model	Analytical Principle	Last Multipoint Calibration
FTIR2LSO2	FTIR	Apr 22, 2009

Triad Data Available Upon Request

Notes:

QA Approval

Airgas

Airgas Specialty Gases
1075 Cinclare Drive
Port Allen, LA 70767
225.388.0900
FAX: 225.388.0959
www.airgas.com

CERTIFICATE OF ANALYSIS
Grade of Product: EPA Protocol

Part Number:	E02NI99E15A0239	Reference Number:	83-124180692-4
Cylinder Number:	SG9112476BAL	Cylinder Volume:	144 Cu.Ft.
Laboratory:	ASG - Port Allen - LA	Cylinder Pressure:	2015 PSIG
Analysis Date:	Jun 22, 2009	Valve Outlet:	660

Expiration Date: Jun 22, 2011

Certification performed in accordance with "EPA Traceability Protocol (Sept. 1997)" using the assay procedures listed. Analytical Methodology does not require correction for analytical interferences. This cylinder has a total analytical uncertainty as stated below with a confidence level of 95%. There are no significant impurities which affect the use of this calibration mixture. All concentrations are on a volume/volume basis unless otherwise noted.
Do Not Use This Cylinder below 150 psig.i.e. 1 Mega Pascal

ANALYTICAL RESULTS

Component	Requested Concentration	Actual Concentration	Protocol Method	Total Relative Uncertainty
SULFUR DIOXIDE	90.00 PPM	92.30 PPM	G1	+/- 1% NIST Traceable
NITROGEN	Balance			

CALIBRATION STANDARDS

Type	Lot ID	Cylinder No	Concentration	Expiration Date
NTRM	06061314	CC207604	45.91PPM SULFUR DIOXIDE/NITROGEN	Sep 01, 2010

ANALYTICAL EQUIPMENT

Instrument/Make/Model	Analytical Principle	Last Multipoint Calibration
FTIRLSO2	FTIR	May 27, 2009

Triad Data Available Upon Request

Notes:

QA Approval

Airgas

Airgas Specialty Gases
12722 S. Wentworth Avenue
Chicago IL 60628
1-773-785-3000
FAX 1-773-785-1928
http://www.airgas.com

CERTIFICATE OF ANALYSIS
Grade of Product: EPA Protocol

Part Number:	E02AI99E15A0218	Reference Number:	54-124209501-1
Cylinder Number:	CC162262	Cylinder Volume:	146 Cu.Ft.
Laboratory:	ASG - Chicago - IL	Cylinder Pressure:	2015 PSIG
Analysis Date:	Mar 15, 2010	Valve Outlet:	660

Expiration Date: Mar 15, 2012

Certification performed in accordance with "EPA Traceability Protocol (Sept. 1997)" using the assay procedures listed. Analytical Methodology does not require correction for analytical interferences. This cylinder has a total analytical uncertainty as stated below with a confidence level of 95%. There are no significant impurities which affect the use of this calibration mixture. All concentrations are on a volume/volume basis unless otherwise noted.
Do Not Use This Cylinder below 150 psig.i.e. 1 Mega Pascal

ANALYTICAL RESULTS

Component	Requested Concentration	Actual Concentration	Protocol Method	Total Relative Uncertainty
NITROGEN DIOXIDE	100.0 PPM	98.38 PPM	G1	+/- 1% NIST Traceable
Air	Balance			

CALIBRATION STANDARDS

Type	Lot ID	Cylinder No	Concentration	Expiration Date
GMIS/NO2	1	CC278297	101.8PPM NITROGEN DIOXIDE/NITROGEN	Nov 25, 2011

ANALYTICAL EQUIPMENT

Instrument/Make/Model	Analytical Principle	Last Multipoint Calibration
Nicolet Magna	FTIR	Mar 01, 2010

Triad Data Available Upon Request

Notes:

Approved for Release

RESPONSE TIME CHECKS

NO. 2 LIME KILN

RUN DATA

Number 13

Client: **Bowater**
Location: **Catawba, SC**
Source: **No. 2 Lime Kiln**

Calibration **1**

Project Number: **03917.008.015**
Operator: **T. Simpkins**
Date: **30 Mar 2010**

Time	O_2 mv	O_2 %	CO_2 mv	CO_2 %	NO_x mv	NO_x ppm
11:08:06	254	6.2	216	18.5	5130	160
11:08:16	255	6.2	216	18.5	5104	159
11:08:26	254	6.2	216	18.5	4994	156
11:08:36	252	6.1	217	18.6	4971	155
11:08:46	254	6.2	216	18.5	5058	158
11:08:56	258	6.3	215	18.5	5097	159
11:09:06	258	6.3	215	18.5	5076	158
11:09:16	254	6.2	216	18.5	5012	156
			gas on			
11:09:26	254	6.2	218	18.7	5498	172
11:09:36	256	6.2	219	18.8	5636	176
11:09:46	259	6.3	218	18.7	5635	176
11:09:56	256	6.2	217	18.6	4835	151
11:10:06	258	6.3	218	18.7	7214	226
11:10:16	192	4.5	174	14.6	8217	257
11:10:26	66	1.2	38	1.8	8150	255
			gas off			
11:10:36	47	0.7	22	0.3	8129	254
11:10:46	45	0.7	19	0.0	8092	253
11:10:56	45	0.7	18	-0.1	8023	251
11:11:06	44	0.6	19	0.0	7913	248
11:11:16	39	0.5	19	0.0	6100	191
11:11:26	38	0.5	19	0.0	5621	175
11:11:36	124	2.7	75	5.3	5551	173
11:11:46	237	5.7	201	17.1	5581	174
11:11:56	252	6.1	212	18.2	5623	176
11:12:06	258	6.3	212	18.2	5595	175
11:12:16	256	6.2	212	18.2	5527	173
11:12:26	254	6.2	217	18.6	5497	172
11:12:36	254	6.2	219	18.8	5524	172
11:12:46	257	6.2	218	18.7	5591	175
			gas on			
11:12:56	262	6.4	217	18.6	5699	178
11:13:06	258	6.3	218	18.7	4553	142
11:13:16	244	5.9	220	18.9	213	5
11:13:26	186	4.4	166	13.8	121	3
11:13:36	629	16.0	171	14.3	96	2
11:13:46	771	19.7	225	19.4	79	1
11:13:56	780	19.9	227	19.6	67	1
11:14:06	782	20.0	228	19.7	59	1
11:14:16	784	20.0	229	19.8	55	0
Avgs	**274**	**6.7**	**174**	**14.6**	**4867**	**152**

NO. 3 RECOVERY FURNACE

RUN DATA

Number 13

Client: **Bowater**
Location: **Catawba, SC**
Source: **No. 3 Recovery**

Calibration **1**

Project Number: **03917.008.015**
Operator: **T. Simpkins**
Date: **7 Apr 2010**

Time	O_2 mv	O_2 %	CO_2 mv	CO_2 %	CO mv	CO ppm	NO_x mv	NO_x ppm	SO_2 mv	SO_2 ppm	
11:49:46	266	6.4	159	13.1	299	239	1934	57	141	0.9	
11:49:56	265	6.4	157	13.0	276	217	1934	57	146	1.0	
11:50:06	265	6.4	159	13.1	276	217	1928	57	143	0.9	
11:50:16	266	6.4	159	13.1	263	205	1939	57	135	0.9	
11:50:26	265	6.4	159	13.1	276	217	1976	58	129	0.8	gas
11:50:36	258	6.2	161	13.3	302	242	1976	58	130	0.8	on
11:50:46	260	6.3	161	13.3	332	271	719	20	130	0.8	
11:50:56	259	6.2	162	13.4	294	234	63	0	126	0.8	
11:51:06	136	3.1	96	7.5	260	202	26	-1	121	0.7	
11:51:16	215	5.1	56	4.0	92	41	22	-1	125	0.8	
11:51:26	397	9.7	120	9.7	63	13	23	-1	123	0.7	
11:51:36	410	10.1	126	10.2	56	6	22	-1	118	0.7	
11:51:46	412	10.1	126	10.2	55	5	21	-1	111	0.6	
					gas off						
11:51:56	412	10.1	126	10.2	55	5	20	-1	113	0.6	
11:52:06	413	10.2	128	10.4	55	5	20	-1	110	0.6	
11:52:16	413	10.2	129	10.5	55	5	19	-1	109	0.6	
11:52:26	413	10.2	129	10.5	55	5	18	-1	105	0.6	
11:52:36	413	10.2	128	10.4	55	5	376	10	108	0.6	
11:52:46	413	10.2	127	10.3	54	4	1559	46	112	0.6	
11:52:56	398	9.8	128	10.4	56	6	1823	54	110	0.6	
11:53:06	307	7.5	150	12.3	157	103	1899	56	116	0.7	
11:53:16	277	6.7	158	13.1	238	181	1888	56	125	0.8	
11:53:26	271	6.5	158	13.1	235	178	1866	55	124	0.8	
11:53:36	270	6.5	161	13.3	233	176	1864	55	127	0.8	
11:53:46	272	6.6	160	13.2	253	195	1890	56	130	0.8	
					gas on						
11:53:56	269	6.5	161	13.3	316	255	1927	57	123	0.7	
11:54:06	266	6.4	162	13.4	346	284	1926	57	120	0.7	
11:54:16	269	6.5	163	13.5	310	250	962	27	122	0.7	
11:54:26	268	6.5	163	13.5	239	182	1604	47	116	0.7	
11:54:36	326	7.9	153	12.6	251	193	3420	102	110	0.6	
11:54:46	256	6.2	98	7.7	106	54	3958	118	110	0.6	
11:54:56	35	0.6	24	1.1	68	18	3969	119	106	0.6	
11:55:06	24	0.3	18	0.6	56	6	3978	119	100	0.5	
					gas off						
11:55:16	23	0.3	18	0.6	56	6	3970	119	95	0.5	
11:55:26	22	0.2	16	0.4	55	5	3971	119	98	0.5	
11:55:36	22	0.2	16	0.4	55	5	3971	119	95	0.5	
11:55:46	22	0.2	17	0.5	55	5	2594	77	92	0.4	
11:55:56	22	0.2	16	0.4	55	5	3660	109	108	0.6	
11:56:06	420	10.3	19	0.7	55	5	4050	121	119	0.7	

RUN DATA
Number 13

Client: **Bowater**
Location: **Catawba, SC**
Source: **No. 3 Recovery**

Calibration **1**

Project Number: **03917.008.015**
Operator: **T. Simpkins**
Date: **7 Apr 2010**

Time	O_2		CO_2		CO		NO_x		SO_2		
	mv	%	mv	%	mv	ppm	mv	ppm	mv	ppm	
11:56:16	218	5.2	16	0.4	55	5	3982	119	106	0.6	
11:56:26	25	0.3	15	0.3	55	5	3947	118	98	0.5	
11:56:36	23	0.3	16	0.4	55	5	3081	92	94	0.5	
11:56:46	23	0.3	14	0.2	54	4	2031	60	100	0.5	
11:56:56	112	2.5	48	3.3	80	29	1900	56	110	0.6	
11:57:06	240	5.8	135	11.0	318	257	1875	55	112	0.6	
11:57:16	269	6.5	154	12.7	434	369	1886	55	105	0.6	gas on
11:57:26	276	6.7	156	12.9	374	311	1906	56	98	0.5	
11:57:36	274	6.6	159	13.1	332	271	1902	56	98	0.5	
11:57:46	273	6.6	161	13.3	418	353	1914	56	108	0.6	
11:57:56	274	6.6	160	13.2	450	384	1937	57	110	0.6	
11:58:06	270	6.5	159	13.1	360	298	1369	40	200	1.5	
11:58:16	274	6.6	160	13.2	378	315	30	-1	1965	19.1	
11:58:26	235	5.6	147	12.1	405	341	12	-1	3900	38.4	
11:58:36	37	0.6	24	1.1	200	144	3	-2	4657	45.9	
11:58:46	25	0.3	16	0.4	59	9	2	-2	4881	48.2	
11:58:56	24	0.3	14	0.2	56	6	3	-2	4935	48.7	
11:59:06	24	0.3	16	0.4	56	6	906	26	4662	46.0	
					gas off						
11:59:16	17	0.1	15	0.3	55	5	1965	58	2521	24.6	
11:59:26	102	2.3	50	3.4	69	19	1897	56	838	7.9	
11:59:36	255	6.1	157	13.0	346	284	1905	56	285	2.4	
11:59:46	268	6.5	160	13.2	400	336	1860	55	146	1.0	
11:59:56	272	6.6	160	13.2	372	309	1788	52	109	0.6	
12:00:06	276	6.7	160	13.2	335	274	1933	57	106	0.6	
12:00:16	291	7.1	150	12.3	377	314	1902	56	112	0.6	
12:00:26	262	6.3	149	12.3	434	369	1923	57	115	0.7	
					gas on						
12:00:36	263	6.3	157	13.0	448	382	1929	57	113	0.6	
12:00:46	266	6.4	159	13.1	465	398	1930	57	112	0.6	
12:00:56	271	6.5	155	12.8	347	285	2348	69	114	0.7	
12:01:06	271	6.5	156	12.9	277	218	3143	94	110	0.6	
12:01:16	228	5.5	146	12.0	289	230	202	4	100	0.5	
12:01:26	50	0.9	36	2.2	167	113	34	-1	99	0.5	
12:01:36	24	0.3	17	0.5	287	228	21	-1	90	0.4	
12:01:46	22	0.2	15	0.3	486	418	17	-1	90	0.4	
12:01:56	21	0.2	15	0.3	496	428	16	-1	92	0.4	
12:02:06	21	0.2	14	0.2	497	429	14	-1	95	0.5	gas off
12:02:16	20	0.2	12	0.0	497	429	12	-1	93	0.4	
12:02:26	20	0.2	12	0.0	496	428	12	-1	88	0.4	
12:02:36	21	0.2	13	0.1	497	429	11	-1	85	0.4	
12:02:46	21	0.2	13	0.1	498	430	9	-1	90	0.4	

RUN DATA

Number 13

Client: **Bowater**
Location: **Catawba, SC**
Source: **No. 3 Recovery**

Calibration **1**

Project Number: **03917.008.015**
Operator: **T. Simpkins**
Date: **7 Apr 2010**

Time	O_2		CO_2		CO		NO_x		SO_2	
	mv	%	mv	%	mv	ppm	mv	ppm	mv	ppm
12:02:56	21	0.2	13	0.1	498	430	10	-1	92	0.4
12:03:06	21	0.2	14	0.2	498	430	435	11	87	0.4
12:03:16	22	0.2	16	0.4	499	431	1617	47	85	0.4
12:03:26	74	1.5	31	1.7	495	427	1850	54	91	0.4
12:03:36	214	5.1	122	9.8	470	403	1922	57	92	0.4
Avgs	**199**	**4.7**	**98**	**7.7**	**251**	**193**	**1538**	**45**	**440**	**3.9**

PERMEATION DEVICE CERTIFICATES

CERTIFICATE

The permeation rate of the DYNACAL® PERMEATION DEVICE listed below is certified traceable to N.I.S.T. standards.

Serial Number: 89-35285

Certification Date: Jan 20, 2010
Certificate Expires: Jan 20, 2011
Chemical: Dimethyl Disulfide
Part Number: 107-200-6301-C50S
Device Type: Dynacal Tube
Length: 20.00
Permeation Rate: 828.44 ng/min
Temperature: 50 C
True Accuracy: +/- 1.08 %
Max Allowed Accuracy: +/- 2.00 %
Certification Method: Gravimetric
Order No: 102022
Customer: WESTON SOLUTIONS, INC.

Approved By: _____

VICI

VICI Metronics, Inc.
26295 Twelve Trees Lane NW
Poulsbo, WA 98370
(360) 697-9199 Fax: (360) 697-6682

Nos. 1&2 CB No. 2 LK Nos. 2-3 RF
03817.005.015

CERTIFICATE

The permeation rate of the DYNACAL® PERMEATION DEVICE listed below is certified traceable to N.I.S.T. standards.

Serial Number: 19-35275

Certification Date: Feb 10, 2010
Certificate Expires: Jun 7, 2010
Chemical: Dimethyl Sulfide
Part Number: 117-033-6200-T33-C50S
Device Type: Dynacal Tube
Length: 3.30
Permeation Rate: 743.42 ng/min
Temperature: 50 C
True Accuracy: +/- 0.48 %
Max Allowed Accuracy: +/- 2.00 %
Certification Method: Gravimetric
Order No: 102022
Customer: WESTON SOLUTIONS, INC.

Approved By: _____

VICI

VICI Metronics, Inc.
26295 Twelve Trees Lane NW
Poulsbo, WA 98370
(360) 697-9199 Fax: (360) 697-6682

Nos. 1&2 CB, No. 2 LK, Nos. 2-3 RF
03817.005.015

CERTIFICATE

The permeation rate of the DYNACAL® PERMEATION DEVICE listed below is certified traceable to N.I.S.T. standards.

Serial Number: 33-35269

Certification Date: Feb 10, 2010
Chemical: Methyl Mercaptan
Device Type: Dynacal Tube
Permeation Rate: 747.75 ng/min
True Accuracy: +/- 0.53 %
Certification Method: Gravimetric
Customer: WESTON SOLUTIONS, INC.

Certificate Expires: Sep 3, 2010
Part Number: 117-041-6000-C50S
Length: 4.10
Temperature: 50 C
Max Allowed Accuracy: +/- 2.00 %
Order No: 102022

Approved By: _____

VICI

VICI Metronics, Inc.
26295 Twelve Trees Lane NW
Poulsbo, WA 98370
(360) 697-9199 Fax: (360) 697-6682

03817.005.015
No. 1&2 CB, No. 2 LK, Nos. 2-3 RF

CERTIFICATE

The permeation rate of the DYNACAL® PERMEATION DEVICE listed below is certified traceable to N.I.S.T. standards.

Serial Number: T-35258

Certification Date: Jan 18, 2010
Certificate Expires: Jan 18, 2011
Chemical: Hydrogen Sulfide
Part Number: 147-543-0110-C505
Device Type: Dynacal Wafer
Geometry: 40T3
Permeation Rate: 617.24 ng/min
Temperature: 50 C
True Accuracy: +/- 0.58 %
Max Allowed Accuracy: +/- 2.00 %
Certification Method: Gravimetric
Order No: 102022
Customer: WESTON SOLUTIONS, INC.

Approved By: _____

VICI

VICI Metronics, Inc.
26295 Twelve Trees Lane NW
Poulsbo, WA 98370
(360) 697-9199 Fax: (360) 697-6682

03817.005.015
Nos. 1&2 CB No. 2 LK Nos. 2-3.RF

APPENDIX J
PROCESS OPERATING/PRODUCTION DATA

No. 1 Combination Boiler
Process Data

Combination Boiler No. 1

Start Time 04/01/10 10:23 AM
End Time 04/01/10 11:27 AM

RUN NO. 1	% opacity % 26AI148.pv	Steam Load mpph 26cf142.pv	Bark tph c1bf_n.pv	Oil gpm 26fc143.pv	Gas mcfh 26fc144.pv	TDF tph 13sc001.pv
01-Apr-10 10:23:00	15.2	279.3	33.1	12.8	0.0	1.3
01-Apr-10 10:29:00	13.6	285.7	34.0	12.8	0.0	1.3
01-Apr-10 10:35:00	14.1	288.8	35.4	12.3	0.0	1.3
01-Apr-10 10:41:00	17.1	285.6	35.1	12.3	0.0	1.3
01-Apr-10 10:47:00	16.5	265.4	32.6	11.4	0.0	1.3
01-Apr-10 10:53:00	18.4	258.7	33.1	10.5	0.0	1.3
01-Apr-10 10:59:00	18.1	254.6	32.4	10.5	0.0	1.3
01-Apr-10 11:05:00	16.2	279.2	36.5	10.6	0.0	1.3
01-Apr-10 11:11:00	18.8	265.6	34.6	10.7	0.0	1.3
01-Apr-10 11:17:00	16.0	271.2	34.7	11.3	0.0	1.3
Average	16	273	34.1	11.5	0	1.3

			btu/hr	% of heat input
Bark	34.1 TPH	4350 btu / lb	297,018,371	0.71
Oil	11.5 GPM	148000 btu / gal	102,438,593	0.24
Gas	0 MCFH	1031 btu / cf	0	0.00
TDF	0.7 tph	15500 btu / lb	20,849,571	0.05
			420,306,534 total heat input	107%

6816
2206
513
9535

Start Time 04/01/10 12:18 PM
End Time 04/01/10 01:47 PM

RUN NO. 2	% opacity % car195b.pv	Steam Load mpph ccf110.pv	Bark tph c1bf_n.pv	Oil gpm cfc117.pv	Gas mcfh cfc127.pv	TDF tph 13sc001.pv
01-Apr-10 12:18:00	9.4	259.6	31.4	12.9	0	1.3
01-Apr-10 12:24:00	10.1	277.5	31.9	14.1	0	1.3
01-Apr-10 12:30:00	9.6	265.8	32.6	12.4	0	1.3
01-Apr-10 12:36:00	8.6	278.3	33.3	13.8	0	1.3
01-Apr-10 12:42:00	9.0	268.2	31.0	13.8	0	1.3
01-Apr-10 12:48:00	8.9	265.5	30.6	13.9	0	1.3
01-Apr-10 12:54:00	8.9	272.6	31.7	13.8	0	1.3
01-Apr-10 13:00:00	8.7	274.5	32.2	13.8	0	1.3
01-Apr-10 13:06:00	7.2	264.2	30.4	13.8	0	1.3
01-Apr-10 13:12:00	6.6	257.6	29.4	13.8	0	1.3
01-Apr-10 13:18:00	5.8	263.0	30.1	13.8	0	1.3
Average	8	267.9	31.3	13.6	0	1.3

			btu/hr	% of heat input
Bark	31.3 TPH	4350 btu / lb	272,576,475	0.66
Oil	13.6 GPM	148000 btu / gal	121,096,689	0.29
Gas	0 MCFH	1031 btu / cf	0	0.00
TDF	0.7 tph	15500 btu / lb	20,838,214	0.05
			414,511,377 total heat input	106%

6336
2665
513
9514

Start Time 04/01/10 03:05 PM
End Time 04/01/10 04:05 PM

RUN NO. 3	% opacity % car195b.pv	Steam Load mpph ccf110.pv	Bark tph c1bf_n.pv	Oil gpm cfc117.pv	Gas mcfh cfc127.pv	TDF tph 13sc001.pv
01-Apr-10 15:05:00	9.2	251.02	31.4	11.3	0	1.3
01-Apr-10 15:11:00	8.7	261.51	32.7	11.6	0	1.3
01-Apr-10 15:17:00	10.0	271.98	35.1	11.2	0	1.3
01-Apr-10 15:23:00	13.8	265.94	34.3	11.2	0	1.3
01-Apr-10 15:29:00	14.5	258.99	33.6	11.4	0	1.3
01-Apr-10 15:35:00	11.7	255.78	30.2	13.5	0	1.3
01-Apr-10 15:41:00	11.9	265.51	31.1	13.7	0	1.3
01-Apr-10 15:47:00	14.6	263.60	31.0	13.7	0	1.3
01-Apr-10 15:53:00	11.8	262.29	30.4	13.7	0	1.3
01-Apr-10 15:59:00	7.7	260.36	29.9	13.7	0	1.3
Average	11	261.7	32.0	12.5	0	1.3

			btu/hr	% of heat input
Bark	32.0 TPH	4350 btu / lb	278,077,223	0.68
Oil	12.5 GPM	148000 btu / gal	111,125,637	0.27
Gas	0.0 MCFH	1031 btu / cf	0	0.00
TDF	0.7 tph	15500 btu / lb	20,861,445	0.05
			410,064,304 total heat input	105%

6528
2481
513
9522

TDF is for both No. 1 and No. 2 Combination Boilers.

No. 2 Combination Boiler
Process Data

Combination Boiler No. 2

Start Time 04/06/10 11:45 AM
End Time 04/06/10 12:45 PM

RUN NO. 1	% opacity % 37ai293b.p	Steam Load mpph 37cf278.pv	Bark tph c2bf.pv	Oil gpm 37fc280.pv	Gas mcfh 37fc281.pv	TDF tph 13sc001.pv
06-Apr-10 11:45:00	18.2	320.4	38.1	26.6	0.0	1.3
06-Apr-10 11:51:00	19.1	329.5	39.0	27.2	0.0	1.3
06-Apr-10 11:57:00	14.0	334.1	41.1	26.6	0.0	1.3
06-Apr-10 12:03:00	16.0	333.8	41.3	25.9	0.0	1.3
06-Apr-10 12:09:00	17.0	339.7	42.3	26.5	0.0	1.3
06-Apr-10 12:15:00	24.7	353.2	43.5	26.4	0.0	1.3
06-Apr-10 12:21:00	13.3	338.6	42.0	26.4	0.0	1.3
06-Apr-10 12:27:00	21.1	336.5	41.5	26.5	0.0	1.3
06-Apr-10 12:33:00	17.1	333.2	40.8	26.6	0.0	1.3
06-Apr-10 12:39:00	15.2	333.3	40.8	26.6	0.0	1.3
Average	18	335.2	41.0	27	0.0	1.3

			btu/hr	% of heat input
Bark	41.0 TPH	4350 btu / lb	356,909,127	0.58
Oil	27 GPM	148000 btu / gal	235,463,675	0.38
Gas	0.0 MCFH	1031 btu / cf	0	0.00
TDF	0.7 tph	15500 btu / lb	20,853,851	0.03
			613,226,652 total heat input	146%

99

Start Time 04/06/10 01:41 PM
End Time 04/06/10 02:44 PM

9600 = 5568
9190 = 3492
10261 = 308
9368

RUN NO. 2	% opacity % 37ai293b.p	Steam Load mpph 37cf278.pv	Bark tph c2bf.pv	Oil gpm 37fc280.pv	Gas mcfh 37fc281.pv	TDF tph 13sc001.pv
06-Apr-10 13:41:00	18.4	377.0	41.7	28.0	0.0	1.3
06-Apr-10 13:47:00	13.1	370.0	42.6	27.6	0.0	1.3
06-Apr-10 13:53:00	12.4	361.9	42.6	27.7	0.0	1.3
06-Apr-10 13:59:00	10.4	357.6	42.7	27.7	0.0	1.3
06-Apr-10 14:05:00	12.1	355.1	42.7	27.7	0.0	1.3
06-Apr-10 14:11:00	12.7	348.4	41.7	27.7	0.0	1.3
06-Apr-10 14:17:00	10.2	348.6	41.6	28.0	0.0	1.3
06-Apr-10 14:23:00	12.0	349.2	41.4	28.0	0.0	1.3
06-Apr-10 14:29:00	16.3	352.6	41.5	28.1	0.0	1.3
06-Apr-10 14:35:00	12.7	346.7	40.7	28.0	0.0	1.3
Average	13	356.7	41.9	28	0.0	1.3

			btu/hr	% of heat input
Bark	41.9 TPH	4350 btu / lb	364,764,504	0.58
Oil	28 GPM	148000 btu / gal	247,370,527	0.39
Gas	0.0 MCFH	1031 btu / cf	0	0.00
TDF	0.7 tph	15500 btu / lb	20,863,363	0.03
			632,998,395 total heat input	151%

100

Start Time 04/06/10 03:27 PM
End Time 04/06/10 04:27 PM

5568
3584
308
9460

RUN NO. 3	% opacity % 37ai293b.p	Steam Load mpph 37cf278.pv	Bark tph c2bf.pv	Oil gpm 37fc280.pv	Gas mcfh 37fc281.pv	TDF tph 13sc001.pv
06-Apr-10 15:27:00	12.0	359.2	42.5	27.6	0.0	1.3
06-Apr-10 15:33:00	15.5	366.8	42.2	27.7	0.0	1.3
06-Apr-10 15:39:00	9.8	353.1	42.3	27.7	0.0	1.3
06-Apr-10 15:45:00	14.9	368.7	42.4	27.6	0.0	1.3
06-Apr-10 15:51:00	10.5	367.0	42.7	27.2	0.0	1.3
06-Apr-10 15:57:00	11.4	363.3	42.9	27.1	0.0	1.3
06-Apr-10 16:03:00	9.1	359.6	42.8	27.6	0.0	1.3
06-Apr-10 16:09:00	17.8	375.2	42.2	27.7	0.0	1.3
06-Apr-10 16:15:00	26.1	380.5	42.4	27.5	0.0	0.9
06-Apr-10 16:21:00	12.8	362.9	43.3	26.9	0.0	1.3
Average	14	365.6	42.6	27	0.0	1.3

			btu/hr	% of heat input
Bark	42.6 TPH	4350 btu / lb	370,428,121	0.58
Oil	27 GPM	148000 btu / gal	243,971,679	0.38
Gas	0.0 MCFH	1031 btu / cf	0	0.00
TDF	0.7 tph	15500 btu / lb	20,241,628	0.03
			634,641,428 total heat input	151%

5568
3492
308
9368

Bowater Incorporated
No. 2 Lime Kiln
Process Data

	East Pre-Coat Filter		West Pre-Coat Filter		Natural Gas	Oil	Instantaneous Opacity	Calculated Lime Production
	gpm mud	solids %	gpm mud	solids %	KCFH	Gallons	%	tpd CaCO
	27fc295a.pv	27dc296a.pv	27fc295b.pv	27dc296b.pv	27fc576.pv	27fc584.pv	27ai529i.pv	27tpd03.pv
30-Mar-10 11:45:00	145	1.259	136	1.260	68	0	5	390
30-Mar-10 11:51:00	146	1.258	134	1.260	68	0	5	387
30-Mar-10 11:57:00	145	1.262	134	1.261	68	0	5	392
30-Mar-10 12:03:00	145	1.263	136	1.260	68	0	6	393
30-Mar-10 12:09:00	145	1.259	136	1.259	68	0	6	396
30-Mar-10 12:15:00	145	1.257	135	1.259	68	0	6	389
30-Mar-10 12:21:00	145	1.257	135	1.259	68	0	5	388
30-Mar-10 12:27:00	145	1.258	135	1.259	68	0	5	386
30-Mar-10 12:33:00	145	1.259	136	1.260	68	0	5	384
30-Mar-10 12:39:00	144	1.260	134	1.260	68	0	5	386
30-Mar-10 12:45:00	144	1.260	135	1.260	68	0	6	386
30-Mar-10 12:51:00	145	1.259	135	1.260	68	0	6	391
30-Mar-10 12:57:00	145	1.261	136	1.260	68	0	6	393
30-Mar-10 13:03:00	145	1.260	136	1.260	68	0	6	394
30-Mar-10 13:09:00	145	1.260	135	1.260	68	0	5	392
30-Mar-10 13:15:00	144	1.260	135	1.260	68	0	5	391
30-Mar-10 13:21:00	145	1.260	135	1.260	68	0	6	389
30-Mar-10 13:27:00	145	1.260	134	1.260	68	0	6	393
30-Mar-10 13:33:00	145	1.259	134	1.261	68	0	6	393
30-Mar-10 13:39:00	146	1.260	134	1.261	68	0	6	390
30-Mar-10 13:45:00	146	1.259	136	1.260	68	0	6	396
30-Mar-10 13:51:00	146	1.260	135	1.259	68	0	6	389
30-Mar-10 13:57:00	145	1.260	136	1.259	68	0	6	392
30-Mar-10 14:03:00	145	1.259	135	1.260	68	0	6	389
30-Mar-10 14:09:00	146	1.259	135	1.260	68	0	6	390
30-Mar-10 14:15:00	145	1.259	134	1.260	68	0	6	395
30-Mar-10 14:21:00	145	1.261	134	1.261	68	0	6	391
30-Mar-10 14:27:00	145	1.259	135	1.260	68	0	6	393
30-Mar-10 14:33:00	146	1.260	136	1.260	9	0	8	390
30-Mar-10 14:39:00	145	1.260	135	1.260	32	0	6	394
30-Mar-10 14:45:00	145	1.259	135	1.260	68	0	6	391
30-Mar-10 14:51:00	145	1.259	135	1.259	68	0	6	393
30-Mar-10 14:57:00	146	1.257	135	1.260	68	0	6	385
30-Mar-10 15:03:00	146	1.260	135	1.261	68	0	6	393
30-Mar-10 15:09:00	145	1.259	134	1.260	68	0	6	394
30-Mar-10 15:15:00	145	1.258	135	1.259	68	0	6	393
30-Mar-10 15:21:00	145	1.261	135	1.260	68	0	6	393
30-Mar-10 15:27:00	145	1.260	136	1.259	68	0	6	
30-Mar-10 15:33:00	145	1.262	135	1.261	68	0	6	
30-Mar-10 15:39:00	145	1.262	137	1.260	68	0	6	
30-Mar-10 15:45:00	145	1.263	135	1.260	64	0	6	
30-Mar-10 15:51:00	146	1.261	136	1.261	7	0	7	
30-Mar-10 15:57:00	145	1.260	135	1.261	62	0	6	

Bowater Incorporated
No. 2 Lime Kiln
Precipitator Data

	Field 2 DC Ma 27ea532a.pv	Field 3 DC Ma 27ea533a.pv	Field 2 DC Kv 27ea532b.pv	Field 3 DC amp 27ea533b.pv	Field 2 AC amp 27ea532c.pv	Field 3 AC amp 27ea533c.pv	Field 2 AC volt 27ea532d.pv	Field 3 AC volt 27ea533d.pv	Field 2 Spark/mn 27qi532.pv	Field 3 Spark/mn 27qi533.pv
03/30/10 11:45 AM	Good Data For	226	Good Data For	50	31	35	Good Data For	Good Data For	0	0
03/30/10 12:00 PM	Good Data For	226	Good Data For	50	31	35	Good Data For	Good Data For	0	0
03/30/10 12:15 PM	Good Data For	226	Good Data For	51	31	35	Good Data For	Good Data For	0	0
03/30/10 12:30 PM	Good Data For	226	Good Data For	51	31	35	Good Data For	Good Data For	0	0
03/30/10 12:45 PM	Good Data For	226	Good Data For	51	31	35	Good Data For	Good Data For	0	0
03/30/10 01:00 PM	Good Data For	226	Good Data For	51	31	35	Good Data For	Good Data For	0	0
03/30/10 01:15 PM	Good Data For	226	Good Data For	51	31	35	Good Data For	Good Data For	0	0
03/30/10 01:30 PM	Good Data For	226	Good Data For	51	31	35	Good Data For	Good Data For	0	0
03/30/10 01:45 PM	Good Data For	226	Good Data For	51	31	35	Good Data For	Good Data For	0	0
03/30/10 02:00 PM	Good Data For	226	Good Data For	51	31	35	Good Data For	Good Data For	0	0
03/30/10 02:15 PM	Good Data For	226	Good Data For	51	31	35	Good Data For	Good Data For	0	0
03/30/10 02:30 PM	Good Data For	226	Good Data For	48	20	35	Good Data For	Good Data For	10	0
03/30/10 02:45 PM	Good Data For	226	Good Data For	51	31	35	Good Data For	Good Data For	0	0
03/30/10 03:00 PM	Good Data For	226	Good Data For	51	30	35	Good Data For	Good Data For	0	0
03/30/10 03:15 PM	Good Data For	226	Good Data For	52	31	35	Good Data For	Good Data For	0	0
03/30/10 03:30 PM	Good Data For	226	Good Data For	52	31	35	Good Data For	Good Data For	0	0
03/30/10 03:45 PM	Good Data For	226	Good Data For	49	23	35	Good Data For	Good Data For	7	0
03/30/10 04:00 PM	Good Data For	226	Good Data For	52	31	35	Good Data For	Good Data For	0	0
03/30/10 04:15 PM	Good Data For	226	Good Data For	52	31	35	Good Data For	Good Data For	0	0

No. 2 Recovery Boiler
Process Data

Start Time 03/31/10 09:22 AM
End Time 03/31/10 04:27 PM

	Steam Load MPPH 25fi317a.pv	Opacity % 25ai321a.pv	Black Liquor GPM 25fc308.pv	Liquor Solids % 25di307.pv	Oxygen % O2 25AI131A.pv	TRS PPM 25AI131B.pv	TRS/O_2 PPM 25AI131C.pv	# BLS/Hr	MMlbs BLS / day	Equv. Pulp Prod ADTP/hr
31-Mar-10 09:22:00	289.40	6.42	189.39	67.44	6.20	3.17	3.17	82403.33	1.98	26.98
31-Mar-10 09:28:00	293.92	6.23	189.16	67.46	6.18	3.25	2.80	82320.88	1.98	26.95
31-Mar-10 09:34:00	286.16	6.01	189.01	67.47	6.09	3.90	4.33	82269.98	1.97	26.93
31-Mar-10 09:40:00	289.01	5.85	189.49	67.49	6.28	3.94	2.95	82497.36	1.98	27.01
31-Mar-10 09:46:00	297.49	5.69	189.12	67.50	6.13	3.42	2.94	82356.21	1.98	26.96
31-Mar-10 09:52:00	297.20	5.62	188.05	67.53	7.62	3.86	3.85	81922.58	1.97	26.82
31-Mar-10 09:58:00	293.75	5.51	188.58	67.54	6.29	3.62	3.12	82161.64	1.97	26.90
31-Mar-10 10:04:00	292.14	5.48	188.57	67.54	6.04	4.31	4.65	82156.23	1.97	26.89
31-Mar-10 10:10:00	297.45	5.44	189.37	67.54	6.31	2.94	2.00	82508.03	1.98	27.01
31-Mar-10 10:16:00	289.73	5.38	188.06	67.54	6.47	2.93	2.59	81937.72	1.97	26.82
31-Mar-10 10:22:00	280.84	5.39	188.76	67.54	6.20	2.90	2.81	82245.18	1.97	26.92
31-Mar-10 10:28:00	280.60	5.63	189.25	67.54	6.28	2.69	2.33	82460.83	1.98	26.99
31-Mar-10 10:34:00	271.72	5.95	188.58	67.54	6.10	2.98	3.32	82168.12	1.97	26.90
31-Mar-10 10:40:00	272.28	6.49	188.49	67.54	6.38	2.77	2.17	82132.24	1.97	26.89
31-Mar-10 10:46:00	285.85	6.93	188.60	67.54	6.27	3.08	2.66	82183.13	1.97	26.90
31-Mar-10 10:52:00	297.77	7.15	188.33	67.55	6.30	2.97	3.10	82063.74	1.97	26.86
31-Mar-10 10:58:00	276.63	7.33	188.27	67.55	6.05	3.35	2.86	82042.32	1.97	26.86
31-Mar-10 11:04:00	268.60	7.66	187.77	67.55	6.01	3.19	3.49	81824.50	1.96	26.79
31-Mar-10 11:10:00	278.41	7.88	187.81	67.55	6.18	2.70	2.06	81841.40	1.96	26.79
31-Mar-10 11:16:00	281.69	8.17	188.21	67.55	6.18	2.89	2.49	82020.48	1.97	26.85
31-Mar-10 11:22:00	279.58	8.65	186.71	67.55	6.19	2.73	2.87	81365.51	1.95	26.64
31-Mar-10 11:28:00	271.71	9.34	187.90	67.55	6.23	2.71	2.34	81885.67	1.97	26.81
31-Mar-10 11:34:00	269.68	9.77	187.29	67.55	6.12	2.95	3.39	81621.63	1.96	26.72
31-Mar-10 11:40:00	287.92	10.17	187.76	67.56	6.12	2.71	2.09	81829.33	1.96	26.79
31-Mar-10 11:46:00	273.98	10.72	187.75	67.56	6.09	3.29	2.83	81827.78	1.96	26.79
31-Mar-10 11:52:00	288.49	10.93	187.44	67.56	6.07	3.06	3.12	81694.27	1.96	26.74
31-Mar-10 11:58:00	292.99	11.40	188.28	67.56	6.43	3.76	3.32	82060.62	1.97	26.86
31-Mar-10 12:04:00	282.44	11.27	188.69	67.56	6.03	3.78	4.04	82238.62	1.97	26.92
31-Mar-10 12:10:00	271.64	10.96	188.69	67.56	6.25	3.42	2.51	82242.64	1.97	26.92
31-Mar-10 12:16:00	291.66	10.81	188.20	67.56	6.05	3.13	2.69	82028.26	1.97	26.85
31-Mar-10 12:22:00	294.24	10.39	187.46	67.56	6.10	3.95	5.31	81707.63	1.96	26.75
31-Mar-10 12:28:00	282.56	10.36	187.83	67.57	6.26	3.65	3.17	81868.83	1.96	26.80
31-Mar-10 12:34:00	276.57	10.04	186.66	67.57	6.28	2.97	3.40	81363.58	1.95	26.64
31-Mar-10 12:40:00	282.78	9.73	188.48	67.57	6.46	2.60	2.09	82158.31	1.97	26.90
31-Mar-10 12:46:00	273.98	9.21	187.11	67.57	6.31	2.81	2.45	81563.56	1.96	26.70
31-Mar-10 12:52:00	291.61	9.03	186.99	67.57	6.32	2.76	3.08	81512.32	1.96	26.68

R1
26.93

Nos. 1&2 CB, No. 2 LK, Nos. 2-3 RF
03817.005.015

No. 2 Recovery Boiler
Process Data

31-Mar-10 12:58:00	302.39	9.01	186.96	67.57	6.37	2.59	2.27	81497.39	1.96	26.68
31-Mar-10 13:04:00	288.18	8.46	187.38	67.57	6.24	3.41	4.02	81682.37	1.96	26.74
31-Mar-10 13:10:00	265.04	8.18	187.43	67.57	6.38	3.55	2.84	81708.10	1.96	26.75
31-Mar-10 13:16:00	289.82	8.08	188.65	67.57	6.27	2.85	2.47	82239.58	1.97	26.92
31-Mar-10 13:22:00	298.40	8.13	188.22	67.58	6.17	2.88	2.98	82055.49	1.97	26.86
31-Mar-10 13:28:00	283.62	8.20	188.03	67.58	6.68	2.78	2.47	81972.80	1.97	26.83
31-Mar-10 13:34:00	273.99	7.81	186.25	67.61	6.13	3.02	3.73	81235.38	1.95	26.59
31-Mar-10 13:40:00	274.09	7.49	186.76	67.63	6.35	2.51	2.02	81474.82	1.96	26.67
31-Mar-10 13:46:00	277.15	7.38	187.33	67.62	6.13	2.71	2.33	81714.07	1.96	26.75
31-Mar-10 13:52:00	292.95	7.43	187.58	67.61	6.61	2.62	2.79	81813.16	1.96	26.78
31-Mar-10 13:58:00	295.89	7.19	187.50	67.60	6.73	2.38	2.15	81767.11	1.96	26.77
31-Mar-10 14:04:00	282.76	7.11	185.89	67.59	6.42	2.54	3.03	81052.87	1.95	26.53
31-Mar-10 14:10:00	272.79	6.93	187.30	67.58	6.13	2.26	1.77	81655.11	1.96	26.73
31-Mar-10 14:16:00	282.16	6.88	186.70	67.57	5.99	2.55	2.18	81382.28	1.95	26.64
31-Mar-10 14:22:00	291.36	6.68	186.58	67.56	5.93	2.47	2.58	81322.12	1.95	26.62
31-Mar-10 14:28:00	282.07	6.65	186.89	67.55	6.09	7.97	6.83	81443.32	1.95	26.66
31-Mar-10 14:34:00	276.69	6.56	187.07	67.53	6.14	5.61	7.03	81499.42	1.96	26.68
31-Mar-10 14:40:00	266.44	6.59	187.64	67.53	6.36	2.68	2.05	81748.31	1.96	26.76
31-Mar-10 14:46:00	295.51	6.35	186.73	67.53	6.30	2.56	2.23	81347.45	1.95	26.63
31-Mar-10 14:52:00	299.50	6.30	186.56	67.53	7.91	2.71	2.87	81274.53	1.95	26.61
31-Mar-10 14:58:00	283.47	6.19	187.09	67.53	6.37	2.37	2.07	81501.34	1.96	26.68
31-Mar-10 15:04:00	273.96	6.13	186.05	67.53	6.20	2.89	3.23	81047.58	1.95	26.53
31-Mar-10 15:10:00	289.65	6.06	186.13	67.53	6.29	2.47	1.88	81080.77	1.95	26.54
31-Mar-10 15:16:00	292.94	6.11	186.90	67.52	6.50	2.57	2.29	81416.98	1.95	26.65
31-Mar-10 15:22:00	292.07	6.15	185.63	67.52	6.31	2.44	2.54	80860.55	1.94	26.47
31-Mar-10 15:28:00	279.63	6.07	186.08	67.52	6.32	2.29	2.00	81053.58	1.95	26.53
31-Mar-10 15:34:00	260.96	5.90	187.45	67.52	6.39	2.52	3.02	81650.60	1.96	26.73
31-Mar-10 15:40:00	286.95	5.87	186.45	67.52	6.14	2.27	1.85	81214.50	1.95	26.59
31-Mar-10 15:46:00	300.52	5.80	185.98	67.52	5.87	2.67	2.26	81007.75	1.94	26.52
31-Mar-10 15:52:00	283.19	5.80	185.06	67.52	6.08	2.52	2.59	80603.60	1.93	26.39
31-Mar-10 15:58:00	277.79	5.80	184.94	67.51	6.17	2.21	1.91	80549.52	1.93	26.37
31-Mar-10 16:04:00	285.68	5.79	186.48	67.51	6.06	2.42	2.78	81221.28	1.95	26.59
31-Mar-10 16:10:00	294.82	5.79	186.54	67.51	5.99	3.74	3.25	81246.02	1.95	26.60
31-Mar-10 16:16:00	293.783519	5.787428595	186.7701709	67.51107718	5.876317458	3.278855641	2.77308406	81343.54	1.95	26.63
								0.00	0.00	**26.75**

Run 4
26.55

03817.005.015
Nos. 1&2 CB, No. 2 LK, Nos. 2-3 RF

No. 2 Recovery Boiler
EP Data

	N-1		N-2		N-3		S-1		S-2		S-3	
	25ev109b.pv Kv	25ea109a.pv Ma	25ev110b.pv Kv	25ea110a.pv Ma	25ev111b.pv Kv	25ea111a.pv Ma	25ev112b.pv Kv	25ea112a.pv Ma	25ev113b.pv Kv	25ea113a.pv Ma	25ev114b.pv Kv	25ea114a.pv Ma
31-Mar-10 09:22:00	28.87	1607.29	Good Data For	1662.88	35.06	1549.49	37.38	1004.72	46.61	1599.18	45.48	1492.53
31-Mar-10 09:37:00	29.14	1603.09	Good Data For	1663.75	35.09	1551.32	37.25	1001.75	46.56	1599.36	45.39	1492.65
31-Mar-10 09:52:00	29.23	1600.06	Good Data For	1673.92	35.11	1552.38	36.96	1005.76	46.53	1597.34	45.37	1492.49
31-Mar-10 10:07:00	28.78	1605.10	Good Data For	1851.66	35.50	1672.03	38.13	1203.36	46.58	1666.64	46.30	1632.47
31-Mar-10 10:22:00	28.55	1610.10	Good Data For	1858.57	35.60	1682.81	38.16	1213.15	46.61	1670.04	46.39	1638.71
31-Mar-10 10:37:00	29.40	1593.44	Good Data For	1852.42	35.52	1680.30	37.76	1210.09	46.50	1673.96	46.25	1639.44
31-Mar-10 10:52:00	30.06	1579.53	Good Data For	1841.84	35.64	1677.66	37.33	1214.59	46.83	1672.94	46.44	1638.96
31-Mar-10 11:07:00	29.93	1594.87	Good Data For	1844.76	35.77	1676.54	37.80	1212.72	46.84	1669.67	46.67	1640.43
31-Mar-10 11:22:00	29.20	1613.49	Good Data For	1847.11	35.78	1681.34	38.28	1210.27	46.74	1668.92	46.55	1641.93
31-Mar-10 11:37:00	29.11	1613.37	Good Data For	1846.42	35.64	1678.02	38.25	1212.43	46.64	1669.83	46.29	1635.40
31-Mar-10 11:52:00	29.53	1591.11	Good Data For	1849.47	35.53	1675.57	37.76	1210.48	46.42	1670.88	46.19	1634.79
31-Mar-10 12:07:00	30.08	1591.30	Good Data For	1850.76	35.59	1677.62	37.62	1210.12	46.52	1670.27	46.37	1636.54
31-Mar-10 12:22:00	29.52	1604.66	Good Data For	1852.92	35.60	1673.97	37.87	1211.95	46.54	1670.36	46.34	1635.66
31-Mar-10 12:37:00	29.43	1608.58	Good Data For	1856.26	35.67	1676.30	37.95	1213.27	46.61	1670.71	46.30	1635.93
31-Mar-10 12:52:00	29.76	1603.62	Good Data For	1860.26	35.74	1676.07	37.75	1209.08	46.62	1669.65	46.27	1633.59
31-Mar-10 13:07:00	29.60	1606.30	Good Data For	1867.02	35.69	1677.85	37.93	1208.84	46.63	1668.71	46.25	1636.24
31-Mar-10 13:22:00	29.05	1613.87	Good Data For	1877.17	35.69	1676.35	38.24	1209.17	46.63	1670.12	46.24	1634.11
31-Mar-10 13:37:00	29.50	1606.90	Good Data For	1876.55	35.69	1678.87	37.84	1208.10	46.59	1671.30	46.15	1634.04
31-Mar-10 13:52:00	30.51	1577.56	Good Data For	1873.31	35.73	1678.86	37.08	1215.58	46.65	1669.38	46.19	1635.58
31-Mar-10 14:07:00	30.33	1587.54	Good Data For	1863.77	36.04	1685.06	37.17	1213.61	47.04	1670.02	46.64	1640.61
31-Mar-10 14:22:00	29.64	1604.68	Good Data For	1862.60	35.93	1679.57	37.42	1211.33	46.89	1670.54	46.49	1637.54
31-Mar-10 14:37:00	29.24	1608.95	Good Data For	1872.61	35.78	1677.44	37.35	1208.48	46.68	1669.31	46.23	1633.43
31-Mar-10 14:52:00	29.70	1604.41	Good Data For	1870.67	35.70	1678.02	37.48	1210.28	46.56	1670.85	46.09	1633.22
31-Mar-10 15:07:00	30.21	1595.28	Good Data For	1866.06	35.73	1681.66	37.55	1207.40	46.68	1672.69	46.24	1633.64
31-Mar-10 15:22:00	29.76	1598.23	Good Data For	1858.44	35.81	1681.36	38.00	1209.57	46.68	1669.62	46.31	1635.78
31-Mar-10 15:37:00	29.43	1606.37	Good Data For	1854.11	35.88	1680.95	38.46	1209.27	46.76	1669.36	46.31	1635.89
31-Mar-10 15:52:00	29.96	1587.71	Good Data For	1839.94	35.88	1683.19	38.16	1209.37	46.65	1668.75	46.33	1637.27
31-Mar-10 16:07:00	30.10937538	1594.044685	Good Data For	1840.446804	35.86088863	1685.779927	38.19834738	1210.62137	46.7097704	1668.008479	46.3367034	1638.308517

No. 3 Recovery Boiler
Process Data

	Steam Load MPPH 51fi317a.pv	Opacity % 51ai321a.pv	Black Liquor GPM 51fi308.pv	Liquor Solids % 51di307a.pv	# BLS/Hr	MMlbs BLS/day	Equv. Pulp Prod ADTP/hr
07-Apr-10 14:10:00	525	7	358	67	155,928	3.74	48
07-Apr-10 14:16:00	529	8	359	67	155,958	3.74	48
07-Apr-10 14:22:00	532	8	358	67	155,834	3.74	48
07-Apr-10 14:28:00	541	8	358	67	155,993	3.74	49
07-Apr-10 14:34:00	532	7	358	67	155,950	3.74	48
07-Apr-10 14:40:00	533	7	359	67	156,052	3.75	49
07-Apr-10 14:46:00	528	7	361	67	156,933	3.77	49
07-Apr-10 14:52:00	514	6	361	67	157,192	3.77	49
07-Apr-10 14:58:00	519	7	361	67	157,095	3.77	49
07-Apr-10 15:04:00	521	7	361	67	157,107	3.77	49
07-Apr-10 15:10:00	528	6	361	67	157,320	3.78	49
07-Apr-10 15:16:00	518	6	362	67	157,446	3.78	49
07-Apr-10 15:22:00	538	6	361	67	157,244	3.77	49
07-Apr-10 15:28:00	535	6	361	67	157,096	3.77	49
07-Apr-10 15:34:00	552	6	361	67	157,074	3.77	49
07-Apr-10 15:40:00	522	7	361	67	157,018	3.77	49
07-Apr-10 15:46:00	526	7	361	67	157,116	3.77	49
07-Apr-10 15:52:00	516	6	361	67	157,157	3.77	49
07-Apr-10 15:58:00	515	6	361	67	157,351	3.78	49
07-Apr-10 16:04:00	537	7	362	67	157,316	3.78	49
07-Apr-10 16:10:00	551	7	361	67	157,376	3.78	49
07-Apr-10 16:16:00	550	7	362	67	157,454	3.78	49
07-Apr-10 16:22:00	536	7	361	67	157,239	3.77	49
07-Apr-10 16:28:00	530	7	362	68	157,492	3.78	49
07-Apr-10 16:34:00	524	7	362	68	157,467	3.78	49
07-Apr-10 16:40:00	517	7	361	67	157,328	3.78	49
07-Apr-10 16:46:00	521	7	362	68	157,474	3.78	49
07-Apr-10 16:52:00	535	7	361	68	157,368	3.78	49
07-Apr-10 16:58:00	538	7	359	68	156,535	3.76	49
07-Apr-10 17:04:00	532	7	360	67	156,581	3.76	49
07-Apr-10 17:10:00	530	7	360	68	157,019	3.77	49
07-Apr-10 17:16:00	531	8	360	68	156,808	3.76	49
07-Apr-10 17:22:00	525	8	360	68	156,729	3.76	49
07-Apr-10 17:28:00	523	7	359	68	156,574	3.76	49
07-Apr-10 17:34:00	521	7	358	68	156,224	3.75	49
07-Apr-10 17:40:00	519	7	358	68	156,011	3.74	49
07-Apr-10 17:46:00	517	7	358	68	156,067	3.75	49
07-Apr-10 17:52:00	517	7	358	68	156,091	3.75	49
07-Apr-10 17:58:00	510	8	359	68	156,368	3.75	49
07-Apr-10 18:04:00	531	9	359	68	156,342	3.75	49
07-Apr-10 18:10:00	556	7	360	68	156,931	3.77	49
07-Apr-10 18:16:00	552	7	360	68	157,164	3.77	49
07-Apr-10 18:22:00	525	7	362	68	157,699	3.78	49
AVERAGE	529	7	360	67	156,829	3.76	49

No. 3 Recovery Boiler
EP Data

Start Time 04/07/10 02:10 PM
End Time 4/7/2010 6:30PM

	W-I 51ev233.pv Kv	51ea233.pv Ma	W-M 51ev234.pv Kv	51ea234.pv Ma	W-O 51ev235.pv Kv	51ea235.pv Ma	E-I 51ev230.pv Kv	51ea230.pv Ma	E-M 51ev231.pv Kv	51ea231.pv Ma	E-O 51ev232.pv Kv	51ea232.pv Ma
07-Apr-10 14:10:00	35.4780741	474.924148	33.2668148	825.5751111	42.2668148	1092.28385	43.9211852	427.291852	42.9333333	1090.41719	38.0668148	1097.46726
07-Apr-10 14:25:00	35.133037	472.384741	33.0957037	829.1994074	42.0666667	1091.44948	44.3740741	440.352593	42.570963	1089.15052	38.029037	1095.86607
07-Apr-10 14:40:00	36.0174815	486.425481	33.170963	828.0171852	41.9333333	1075.41719	44.6835556	438.688148	42.629037	1089.31615	38.1041481	1096.66667
07-Apr-10 14:55:00	35.9164444	491.508148	33.0666667	827.9834074	42.0666667	1091.06667	42.9420741	448.248741	42.5711111	1090	38.0668148	1095.48385
07-Apr-10 15:10:00	36.333037	470.360593	33.2666667	828.8171852	42	1091.06667	43.82	436.79037	42.8288889	1090.06667	38.4665185	1098.11615
07-Apr-10 15:25:00	36.18	523.757333	33.2	827.9822222	42.1623704	1090.53333	42.5303704	383.669037	43	1090.14993	38.4957037	1096.4
07-Apr-10 15:40:00	35.4385185	497.659852	33.3998519	829.6	41.6374815	1063.39941	43.9365926	420.016593	42.9333333	1089.31674	38.6001481	1096.13393
07-Apr-10 15:55:00	36.7813333	447.401778	33.8957037	830.2	42.6957037	1091.98281	43.8	343.191704	43.2666667	1090.26667	38.3042963	1097.46607
07-Apr-10 16:10:00	35.2302222	408.418667	33.6376296	829.6171852	42.3042963	1090.95052	44.2868148	362.374667	43	1087.13333	38.1333333	1095.63496
07-Apr-10 16:25:00	35.3791111	414.075852	33.2668148	828.9333333	42.0668148	1090.00059	44.7712593	389.530074	42.8376296	1089.61719	38	1095.71556
07-Apr-10 16:40:00	35.4202963	434.548148	32.6666667	829.2500741	41.9333333	1090.53333	45.0379259	395.233926	42.629037	1089.84948	37.9333333	1094
07-Apr-10 16:55:00	35.0668148	439.384889	33.1333333	829.2832593	42	1091.29896	44.5703704	423.016148	42.5042963	1089.84948	38	1094.00059
07-Apr-10 17:10:00	35.1122963	434.971259	33.3333333	827.6005926	42.2	1092.16593	44.9333333	433.776444	42.3623704	1089.08385	38	1095.18281
07-Apr-10 17:25:00	36.7505185	530.877185	32.9334815	829.0494815	41.9333333	1072.51793	45.4204444	448.349926	42.5044444	1089.73333	38	1095.21659
07-Apr-10 17:40:00	36.7162963	523.239259	33.0665185	827.8666667	42	1092.01659	44.1334815	453.640148	42.6955556	1089.73333	38	1094.38341
07-Apr-10 17:55:00	36.4211852	499.453778	33	828.6660741	42.0666667	1092.66726	44.0093333	373.137926	42.8666667	1089.91615	38	1092.81778
07-Apr-10 18:10:00	36.5994074	474.570963	33.170963	828.5505185	42.1333333	1090.8	44.5580741	389.837778	42.6668148	1089.61778	38	1092.66548

END
OF
DOCUMENT