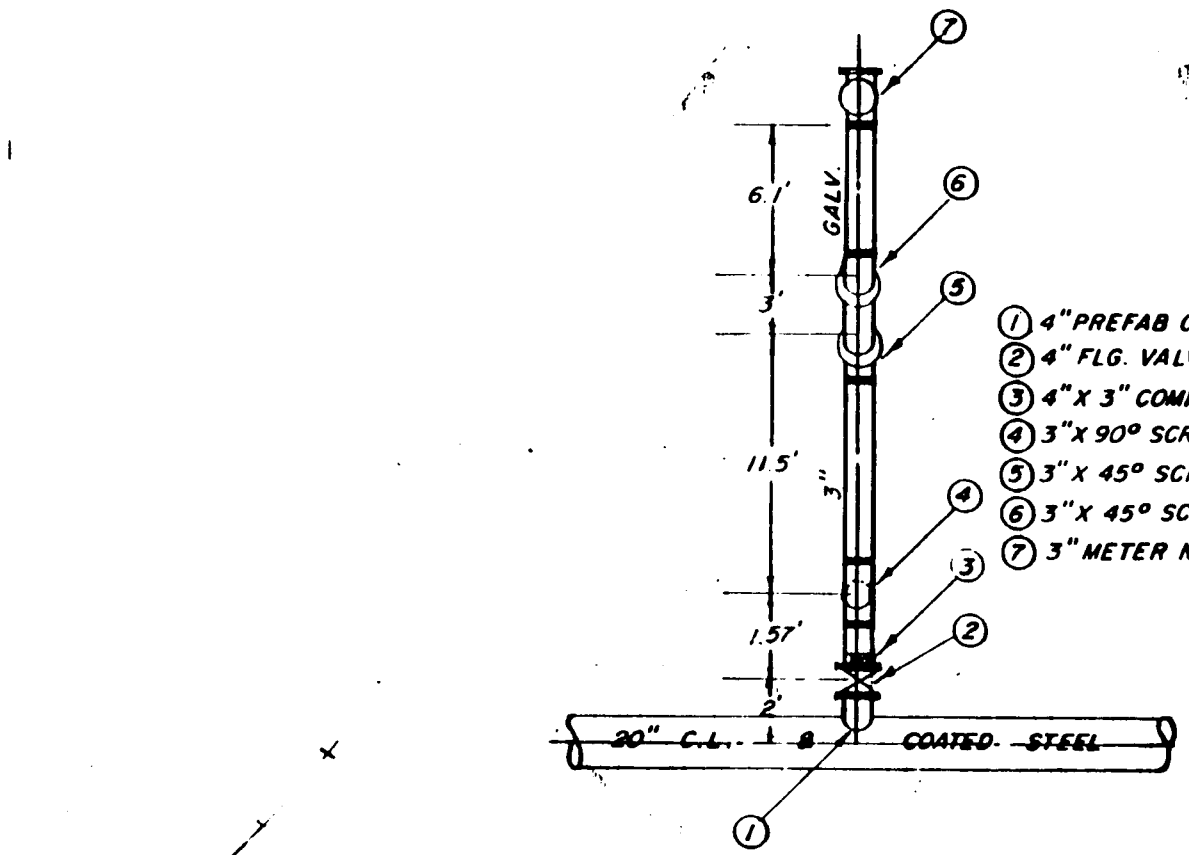

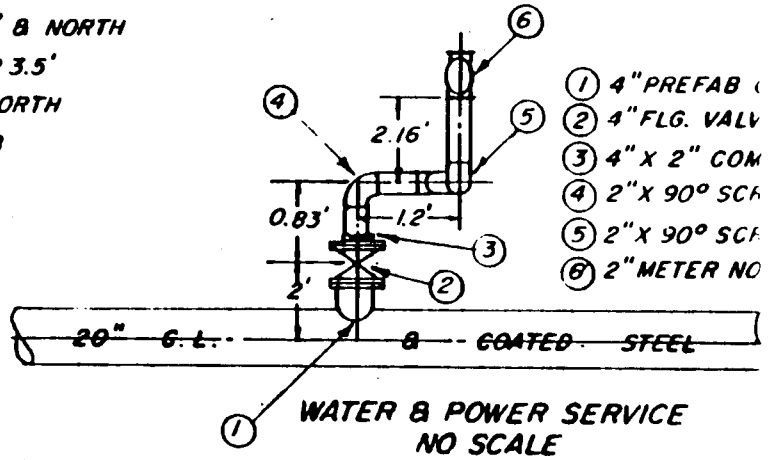

WATER & POWER SERVICE
NO SCALE

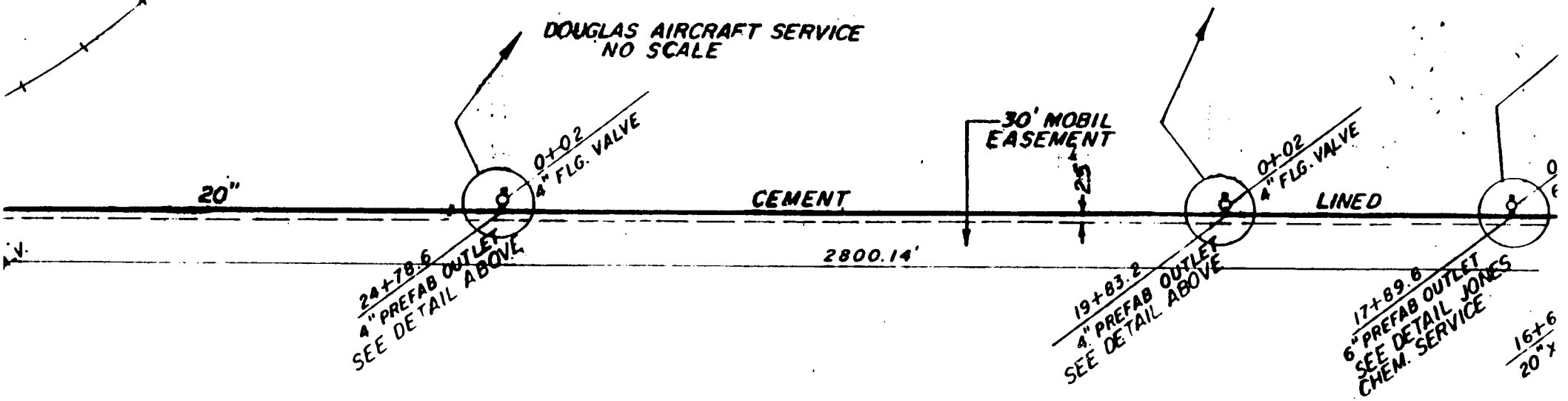

BOE-C6-0112554