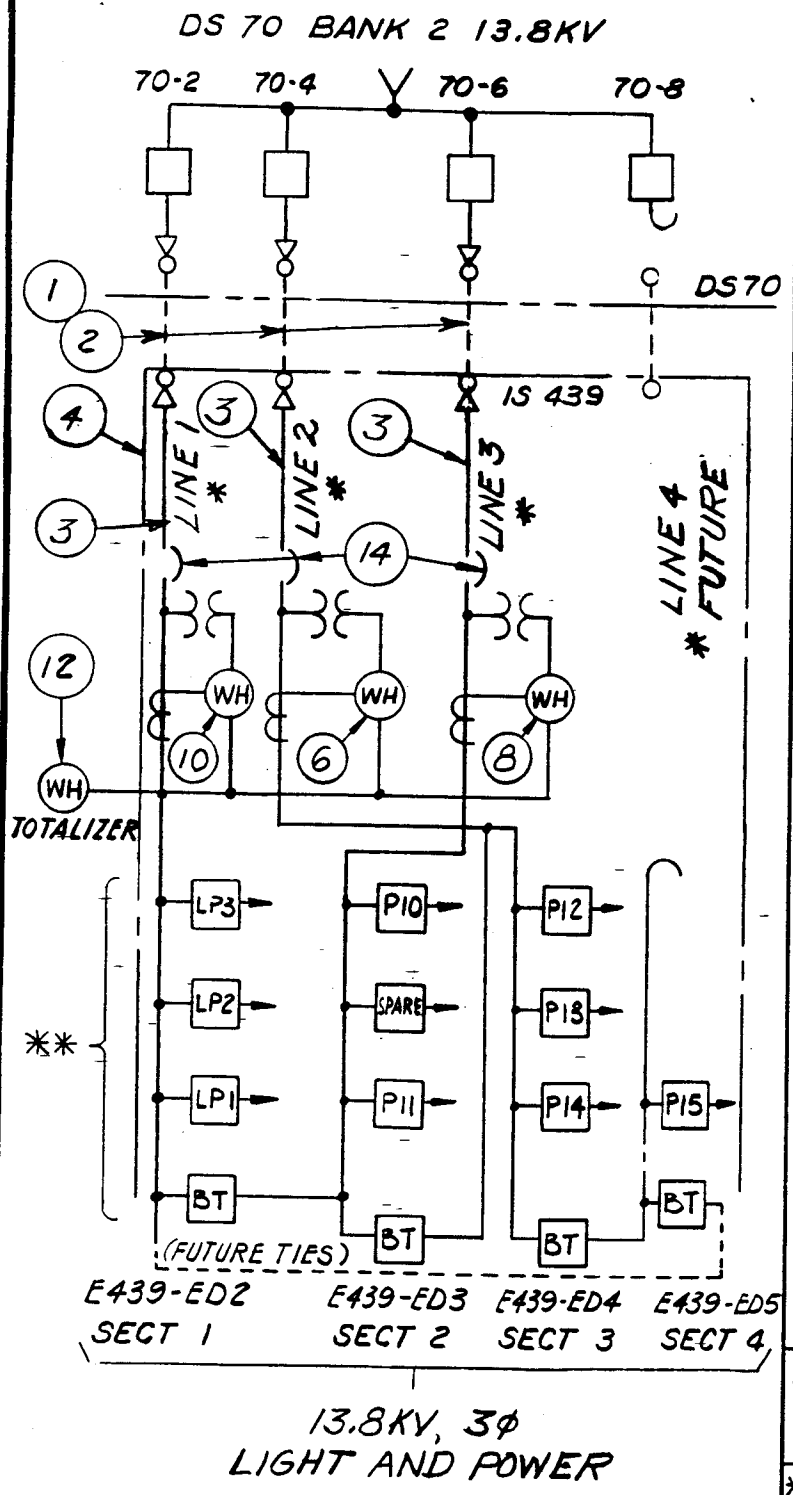

EQUIPMENT LIST

NO.	DESCRIPTION
1	CABLE, COPPER, 1000 MCM, 3/c, P/L, 23KV
2	CONDUIT, 5" NON-METALLIC CUST.
3	CABLE, COPPER, 1000 MCM, TAPED
4	ALL GENERAL ELECTRIC METAL-CLAD SWGR. & BUSWAYS CUST.
6	WHM, 600A, 13.8KV REC P12025-1 SERV 2-58740 K=14400
8	WHM, 600A, 13.8KV REC P12025-2 SERV 2-59141 K=14400
10	WHM, 600A, 13.8KV REC P12025-3 SERV 2-59142 K=14400
12	WHM, TOTALIZER, REC M3T-18225 SERV 2-58740, TAPE K=96, COUNTER K=24
14	AIR CIRCUIT BREAKER, 1200A GENERAL ELECTRIC CUST.

* NOTE: ALL LINE & CIRCUIT BREAKER NUMBERS WITHIN IS 439 ARE CUSTOMER'S DESIGNATION.

** ALL STATION EQUIPMENT EXCEPT METERING OWNED BY CUSTOMER.

LOCATION: McDONNELL-DOUGLAS BLDG 4

REV. NO.
TYPE OF STATION: INDOOR

DRAWN	CKK	8-20-70
CHECKED	R. Hoke	9-11-70
REVISED		
DESIGN ENGINEERS		

RECOMMENDED FOR APPROVAL

APPROVED

ONE LINE OPERATING DIAGRAM
MCDONNELL-DOUGLAS CORP
IS 439 19503 S. NORMANDIE AVE.

POWER SYSTEM
DEPARTMENT OF WATER & POWER – CITY OF LOS ANGELES

PROJECT	DRAWING
E439	EDI

BOE-C6-0090036

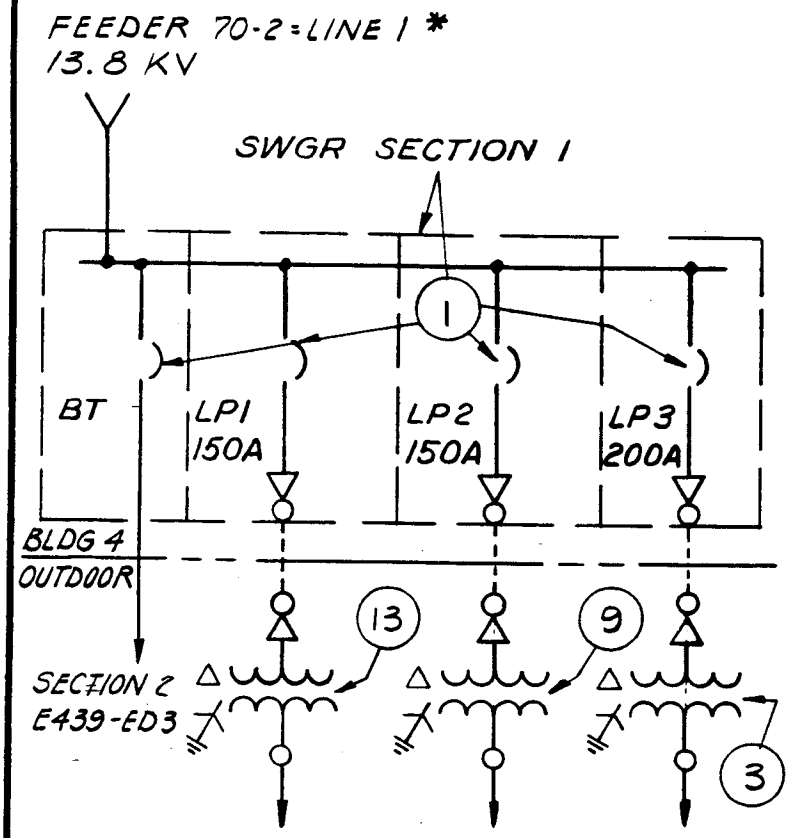

EQUIPMENT LIST

NO.	DESCRIPTION
1	AIR CIRCUIT BREAKER, MET-ENCL
	GENERAL ELECTRIC CUST
3	TRANS, 3-1250 KVA, CONN 13 800-2300V
	14142/13800/13455/13110/12765-2300/2000V
	WESTINGHOUSE TYPE 21 TRB
	SER 3171730, Z(AVG)=6.4% CUST
	SER 3171731 CUST
	SER 3171732 CUST
9	TRANS, 1-3000 KVA, 3φ, CONN 13800-4000Y/2300V
	14142/13800/13455/13110/12765-4000Y/2300V
	WAGNER TYPE 21 TRB
	SER 362275 Z=6.4% CUST
13	TRANS, 1-3000 KVA, 3φ, CONN 13800-4000Y/2300V
	14142/13800/13455/13110/12765-4000Y/2300V
	WAGNER TYPE 21TRB
	SER 362269 Z=6.4% CUST

* CUSTOMER DESIGNATION
ALL EQUIPMENT PROPERTY OF CUSTOMER

REV. NO.
TYPE OF STATION:

DRAWN	KY	8-20-70
CHECKED	R Hoke	9-11-70
REVISED		
DESIGN ENGINEERS	CEP	

RECOMMENDED FOR APPROVAL

APPROVED W. Sellsgh

ONE LINE OPERATING DIAGRAM
MCDONNELL-DOUGLAS CORP
IS439 19503 S. NORMANDIE AVE

POWER SYSTEM
DEPARTMENT OF WATER & POWER - CITY OF LOS ANGELES

PROJECT	DRAWING
E439	ED2

BOE-C6-0090037

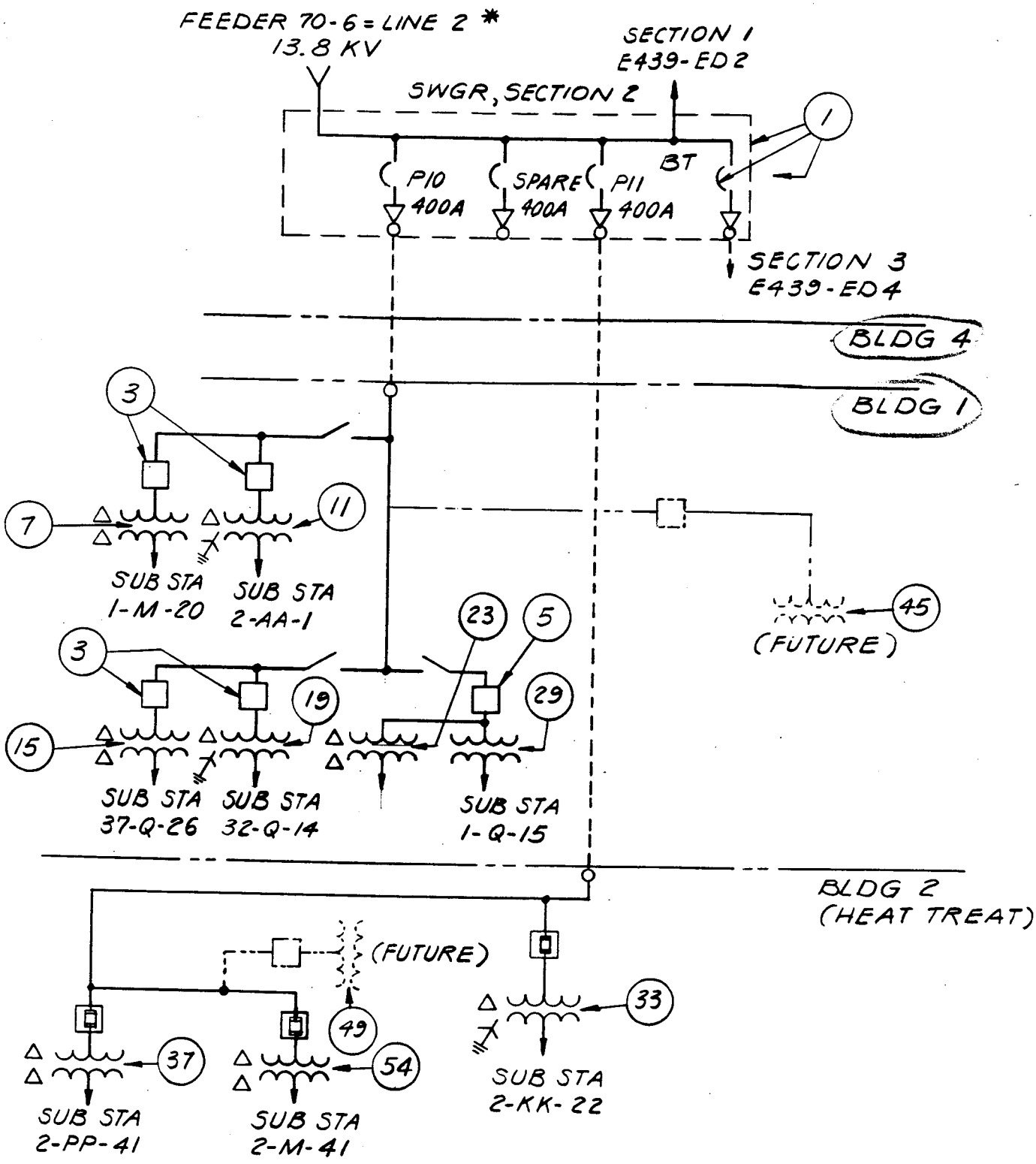

*CUSTOMER DESIGNATION
ALL EQUIPMENT PROPERTY OF CUSTOMER

REV. NO.
TYPE OF STATION:

EQUIPMENT LIST E439-ED3A

DRAWN	PS	8-20-70	RECOMMENDED FOR APPROVAL
CHECKED	R Hoke	9-11-70	
REVISED			
DESIGN ENGINEERS			
			APPROVED

ONE LINE OPERATING DIAGRAM
MCDONNELL - DOUGLAS CORP
IS439 19503 S. NORMANDIE AVE

POWER SYSTEM
DEPARTMENT OF WATER & POWER—CITY OF LOS ANGELES

PROJECT	DRAWING
E439	ED3

BOE-C6-0090038

EQUIPMENT LIST

NO.	DESCRIPTION
1	AIR CIRCUIT BREAKER, MET-ENCL
	GENERAL ELECTRIC CUST
3	CIRCUIT BREAKER, 600A, 15KV
	KELMAN, TYPE MES G9 CUST
5	CIRCUIT BREAKER, 600A, 13.8KV
	ALLIS-CHALMERS TYPE OZ-210 CUST
7	TRANS, 1-1500KVA, 3φ, CONN 13200-460V
	13200-230/460V
	ALLIS-CHALMERS
	SER 216948 Z=5.3% TYPE CLISC CUST
11	TRANS, 1-1500KVA, 3φ, CONN 13800-460V
	WESTINGHOUSE TYPE
	SER 3161046 Z=6.9% CUST
15	TRANS, 1-1500KVA, 3φ, CONN 13200-460V
	13200-230/460V
	ALLIS-CHALMERS
	SER 2169651 Z=5.3% TYPE CLISC CUST
19	TRANS, 1-1500KVA, 3φ, CONN 13800-460V
	WESTINGHOUSE TYPE
	SER 3161048 Z=6.9% CUST
23	TRANS, 3-150KVA, CONN 13200-480V
	GENERAL ELECTRIC
	SER 6813881 Z(AVG)=3.9% TYPE HS CUST
	SER 6813991 TYPE HS CUST
	SER 6813984 CUST
29	TRANS, 1-150KVA, CONN 13800-120/240V
	MOLONEY
	SER 739105 CUST
33	TRANS, 1-2000KVA, 3φ, CONN 13800-480Y/277V
	GENERAL ELECTRIC
	SER G-857359 Z=5.9% CUST
37	TRANS, 1-2500KVA, 3φ, CONN 13800-480V
	GENERAL ELECTRIC
	SER C-863780 Z=5.94% CUST
41	
42	
43	
44	
45	TRANS, 1-2000KVA
	(FUTURE)
49	TRANS, 2-750KVA
	(FUTURE)
54	TRANS, 1-1500KVA, 3φ, CONN. 13800-480V
	GENERAL ELECTRIC
	SER C863781 Z=5.85% CUST
58	

DRAWN	KY	8-24-70
CHECKED	RHoke	9-11-70
REVISED		

DESIGN ENGINEERS

CEP

RECOMMENDED FOR APPROVAL

APPROVED

ONE LINE OPERATING DIAGRAM
MCDONNELL - DOUGLASS CORP
IS 439 19503 S. NORMANDIE AVE

POWER SYSTEM

DEPT. OF WATER & POWER - CITY OF LOS ANGELES

PROJECT	DRAWING
E439	ED3A

JOB NO. 1-29 E439-ED3A

BOE-C6-0090039