MC DONNELL DOUGLAS CORPORATION
DOUGLAS AIRCRAFT COMPANY

TORRANCE, CALIFORNIA

C–6 FACILITY

SOIL & GROUNDWATER REMEDIAL DESIGN

95% SUBMITTAL

AUGUST 15, 1994

MONTGOMERY WATSON

Pasadena, California

BOE-C6-0061169

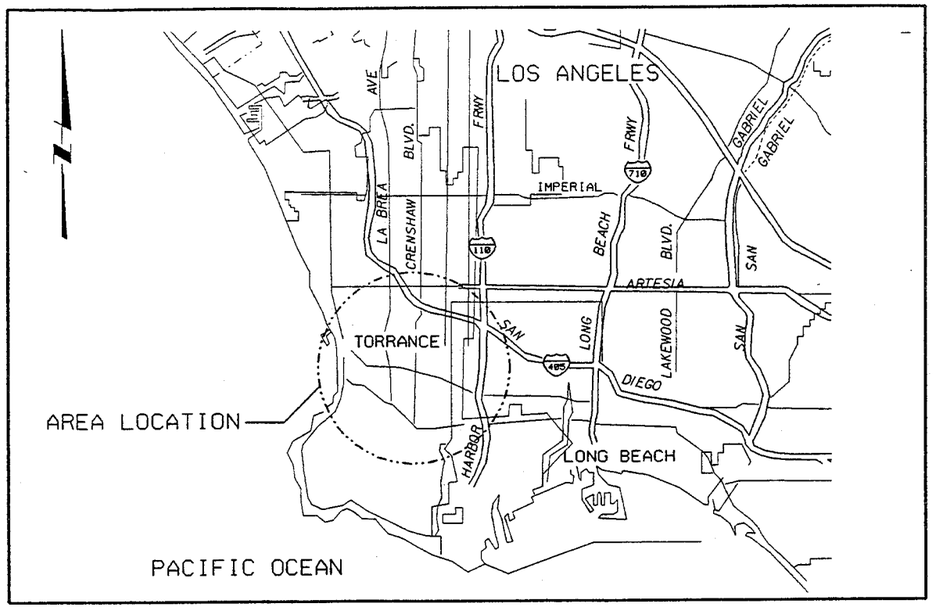

VICINITY MAP

NTS

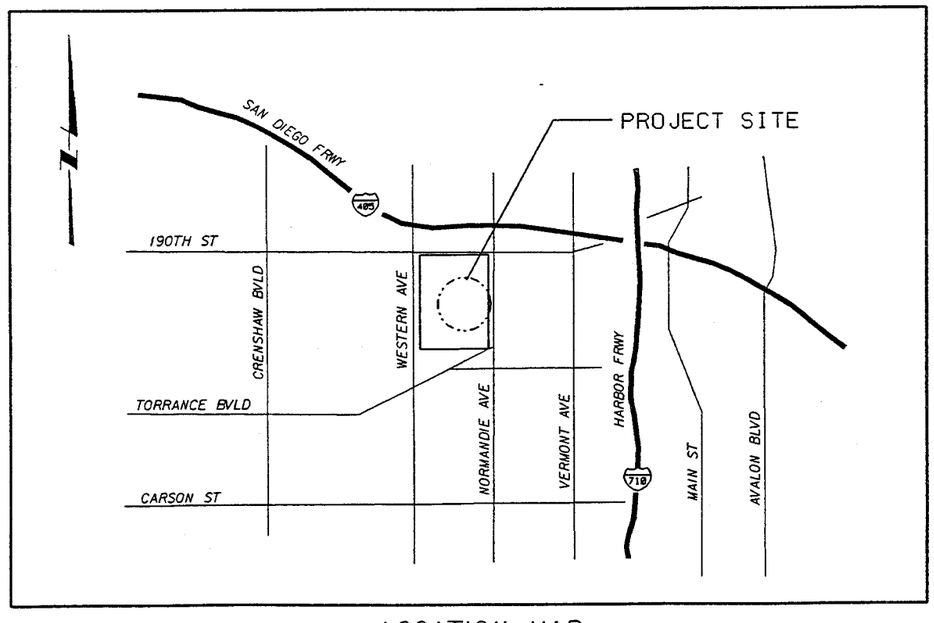

LOCATION MAP

NTS

LIST OF DRAWINGS

GENERAL

T-1	DRAWING INDEX AND LOCATION MAPS
T-2	ABBREVIATIONS
T-3	SYMBOLS

CIVIL

C-1	CIVIL NOTES
C-2	SITE PLAN
C-3	PIPING PLAN
C-4	STORM DRAIN PIPE
C-5	SECTIONS AND DETAILS
C-6	CIVIL PIPING SCHEDULE

ARCHITECTURAL

A-1	FLOOR PLAN & ELEVATIONS

STRUCTURAL

S-1	STRUCTURAL GENERAL NOTES AND DETAILS
S-2	STRUCTURAL STANDARD DETAILS
S-3	FOUNDATION PLAN
S-4	STRUCTURAL DETAILS

PROCESS PIPING

PP-1	PIPING SCHEDULE
PP-2	EQUIPMENT SCHEDULE
PP-3	TREATMENT SYSTEM PROCESS FLOW DIAGRAM
PP-4	PLANT AIR SCHEMATIC
PP-5	TREATMENT PAD - EQUIPMENT PLAN
PP-6	TREATMENT PAD - WEST PLAN
PP-7	TREATMENT PAD - EAST PLAN
PP-8	TREATMENT PAD - SECTION 1
PP-9	TREATMENT PAD - SECTION 2
PP-10	TREATMENT PAD - SECTION 3
PP-11	TREATMENT PAD - SECTION 4
PP-12	TREATMENT PAD - SECTION 5
PP-13	WELL PUMP VAULT LAYOUT
PP-14	MECHANICAL STANDARD DETAILS - 1
PP-15	MECHANICAL STANDARD DETAILS - 2
PP-16	MECHANICAL STANDARD DETAILS - 3
PP-17	MECHANICAL STANDARD DETAILS - 4
PP-18	WELL SCHEDULE
PP-19	WELL PUMP DETAILS

INSTRUMENTATION

GI-1	INSTRUMENT SYMBOLS & ABBREVIATION - 1
GI-2	INSTRUMENT SYMBOLS & ABBREVIATION - 2
GI-2	INSTRUMENT SYMBOLS & ABBREVIATION - 3
GI-4	INSTALLATION DETAILS
I-1	LOOP DIAGRAM - 1. INFLUENT & EQUALIZATION
I-2	LOOP DIAGRAM - 2. FILTERS
I-3	LOOP DIAGRAM - 3. AIR STRIPPERS
I-4	LOOP DIAGRAM - 4. EFFLUENT & FLOW CONTROL
I-5	LOOP DIAGRAM - 5. SOLID HANDLING
I-6	LOOP DIAGRAM - 6. CHEMICAL FEED
I-7	LOOP DIAGRAM - 7. SUMP & RECYCLE
I-8	LOOP DIAGRAM - 8. OFF GAS TREATMENT
I-9	LOOP DIAGRAM - 9. LEAK DETECTION
I-10	CONTROL BLOCK DIAGRAM
I-11	MAIN CONTROL BOARD LAYOUT AND DETAILS
I-12	CONTROL SCHEMATIC

ELECTRICAL

E-1	ELECTRICAL SYMBOLS
E-2	ELECTRICAL ABBREVIATIONS AND GENERAL NOTES
E-3	ELECTRICAL SITE PLAN
E-4	SINGLE LINE DIAGRAM
E-5	EQUIPMENT ELEVATION
E-6	SCHEMATIC DIAGRAMS
E-7	CONDUIT / WIREFILL SCHEDULE
E-8	PANEL & FIXTURE SCHEDULE
E-9	ELECTRICAL STANDARD DETAILS - 1
E-10	ELECTRICAL STANDARD DETAILS - 11
E-11	LIGHTING AND RECEPTACLE PLAN
E-12	POWER AND CONTROL PLAN - WEST SIDE
E-13	POWER AND CONTROL PLAN - EAST SIDE
E-14	INSTRUMENTATION PLAN - WEST SIDE
E-15	INSTRUMENTATION PLAN - EAST SIDE

MCDONNELL DOUGLAS CORPORATION - THIS INFORMATION IS SUBJECT TO DATA RIGHTS LEGENDS AT THE BEGINNING OF THE DOCUMENT.

MCDONNEELL DOUGLAS CORPORATION PROPRIETARY RIGHTS ARE INCLUDED IN THE INFORMATION DISCLOSED HEREIN. RECEPIENT BY ACCEPTING THIS DOCUMENT AGREES THAT NEITHER THIS DOCUMENT NOR THE INFORMATION DISCLOSED HEREIN NOR ANY PART THEREOF SHALL BE REPRODUCED OR TRANSFERRED TO OTHER DOCUMENTS OR USED OR DISCLOSED TO OTHERS FOR MANUFACTURING OR ANY OTHER PURPOSE EXCEPT AS SPECIFICALLY AUTHORIZED IN WRITING BY MCDONNELL DOUGLAS CORPORATION. UNPUBLISHED-CREATED ON PREPARATION DATE OF THIS DOCUMENT. ALL RIGHTS RESERVED UNDER THE COPYRIGHT LAWS BY MCDONNELL DOUGLAS CORPORATION.

MONTGOMERY WATSON
Pasadena, California

T-1

R.H. L.H. DASH NO	NO REQ	SIZE & DESCRIPTION OF MATERIAL		SIGNATURE	DATE
SCALE. NONE	LIMITS ON DIM. UNLESS OTHERWISE NOTED. ANGULAR	FRAC. DEC.	ENGR		
			DWN		
FAR NO. 292116	LOCATION 47A-ID-1-A1		CKD		
			APPVD		
			APPVD		

TITLE SOIL / GROUNDWATER REMEDIAL DESIGN
C-6 TORRANCE FACILITY
DRAWING INDEX AND LOCATION MAPS

DOUGLAS AIRCRAFT COMPANY
MCDONNELL DOUGLAS CORPORATION
FACILITIES

CI-701-4-111498

SHEET OF

BOE-C6-0061170

A	AIR
AB	ANCHOR BOLT
ABBR	ABBREVIATION
ABS	ABSOLUTE TEMPERATURE
AC	ACTIVATED CARBON, ASPHALTIC CONCRETE, OR ALTERNATING CURRENT
A/C	AIR CONDITIONING
ACOUS	ACOUSTIC OR ACOUSTICAL
ACP	ASPHALTIC CONCRETE PAVEMENT OR ASBESTOS CEMENT PIPE
ADJ	ADJUSTABLE
AER	AERATION
ALUM	ALUMINUM OR ALUM
ALUM	ALUMINUM
AMB	AMBIENT
ANSI	AMERICAN NATIONAL STANDARDS INSTITUTE (FORMERLY A.S.A.)
API	AMERICAN PETROLEUM INSTITUTE
APPD	APPROVED
APPROX	APPROXIMATE
ARCH	ARCHITECTURAL
ASA	AMERICAN STANDARDS ASSOCIATION (NOW ANSI)
ASME	AMERICAN SOCIETY OF MECHANICAL ENGINEERS
ASTM	AMERICAN SOCIETY FOR TESTING AND MATERIAL
ASSY	ASSEMBLY
AT	ACOUSTICAL TILE
ATM	ATMOSPHERE
AVAR	AIR VACUUM AND AIR RELEASE VALVE
AWWA	AMERICAN WATER WORKS ASSOCIATION

BC	BEGIN CURVE, BOLT CIRCLE OR BETWEEN CENTERS
BCR	BEGIN CURB RETURN
BD	BOARD
BF	BLIND FLANGE
BFP	BACK FLOW PREVENTER
BHP	BRAKE HORSEPOWER
BLDG	BUILDING
BLD FLG	BLIND FLANGE
BLK	BLACK OR BLOCK
BLKG	BLOCKING
BM	BEAM OR BENCH MARK
BO	BLOW-OFF ASSEMBLY
BOD	BIOCHEMICAL OXYGEN DEMAND
BOT	BOTTOM
BPV	BACK PRESSURE VALVE
BRK	BRICK
B & S	BELL AND SPIGOT
BSMT	BASEMENT
BT	BOLT
BTU	BRITISH THERMAL UNIT
BV	BUTTERFLY VALVE
BVC	BEGIN VERTICAL CURVE
BWV	BACK WATER VALVE

C	CENTIGRADE
CAB	CABINET
CAP	CAPACITY
CB	CATCH BASIN OR CHALK BOARD
CC	CENTER TO CENTER
CD	CEILING DIFFUSER
CEM	CEMENT
CER	CERAMIC
CFH	CUBIC FEET PER HOUR
CFM	CUBIC FEET PER MINUTE
CFS	CUBIC FEET PER SECOND
CHEM	CHEMICAL
CHG	CHANGE
CHK V	CHECK VALVE
CHKD PL	CHECKERED PLATE
CI	CAST IRON
CJ	CONSTRUCTION JOINT
CL	CHLORINE GAS, CHLORINATOR, CHAIN LINK, CLEARANCE OR CENTERLINE
CLG	CEILING
CLOS	CLOSET
CLR	CLEAR
CM	CENTIMETER
CML & C	CEMENT MORTAR LINED AND COATED
CMP	CORRUGATED METAL PIPE
CMU	CONCRETE MASONRY UNIT
CO	CLEANOUT
COL	COLUMN
CONC	CONCRETE OR CONCENTRIC
COND	CONDENSER OR CONDENSATE
CONN	CONNECTION
CONSTR	CONSTRUCTION OR CONSTRUCT
CONT	CONTINUED OR CONTINUOUS
CONTR	CONTRACTOR
COMP	COMPRESSOR
COTG	CLEAN-OUT TO GRADE
CPLG	COUPLING
CPVC	CHLORINATED POLYVINYL CHLORIDE
CS	CAUSTIC SODA OR CAST STEEL
CT	CERAMIC TILE
CTSK	COUNTERSUNK
CTR	CENTER
CU	COPPER OR CUBIC
CYL	CYLINDER

d	PENNY
DBL	DOUBLE
DC	DIRECT CURRENT
DET	DETAIL
DF	DRINKING FOUNTAIN OR DOUGLAS FIR
DG	DOOR GRILLE
DI	DUCTILE IRON
DIA	DIAMETER
DIAG	DIAGONAL
DIAPH	DIAPHRAGM
DISCH	DISCHARGE
DISP	DISPENSER
DN	DOWN OR DECANT
DO	DISSOLVED OXYGEN
DR	DOOR OR DRAIN
DS	DRENCH SHOWER AND EYE WASH
DWG	DRAWING
DIFF	DIFFUSER OR DIFFERENTIAL

E	EAST
EA	EACH
EB	EXPANSION BOLT OR ANCHOR
EC	END CURVE
ECC	ECCENTRIC
ECR	END CURB RETURN
EF	EACH FACE OR EXHAUST FAN
EFF	EFFLUENT
EG	EXHAUST GRILLE OR EXISTING GRADE
EL	ELEVATION
ELEC	ELECTRICAL OR ELECTRONIC
ENG	ENGINE
EPT	ETHYLENE PROPYLENE
ENCL	ENCLOSURE
ENT	ENTRANCE
EQ	EQUAL
EQUIP	EQUIPMENT
EVAP	EVAPORATOR
EVC	END VERTICAL CURVE
EW	EACH WAY OR EYE WASH
EXH	EXHAUST
EX-HY	EXTRA HEAVY
EXIST	EXISTING
EXP JT	EXPANSION JOINT
EXT	EXTERIOR OR EXTENSION
EXTR	EXTRUDED

F	FAHRENHEIT OR FINISH
FABR	FABRICATION, FABRICATE OR FABRICATED
FAI	FRESH AIR INTAKE
FB	FLAT BAR, FLOOR BEAM OR FIELD BOOK
FCO	FLOOR CLEANOUT
FD	FLOOR DRAIN
FDR	FEEDER
FE	FIRE EXTINGUISHER OR FINAL EFFLUENT
FEM	FEMALE (PIPE THREAD)
FF	FLAT FACE OR FAR FACE
F TO F	FACE TO FACE
FG	FINISHED GRADE
FH	FIRE HYDRANT
FIG	FIGURE
FIN	FINISHED
FIX	FIXTURE
FL	FLOWLINE OR FLOOR
FLEX	FLEXIBLE
FLOCC	FLOCCULATOR OR FLOCCULATION
FLG	FLANGE OR FLOORING
FLGD	FLANGED
FLR	FLOOR
FM	FACTORY MUTUAL (LAB. APPROVED)
FWH	FLEXIBLE METAL HOSE
FND	FOUNDATION
FOC	FACE OF CONCRETE
FOM	FACE OF MASONRY
FOS	FACE OF STUDS
FOW	FACE OF WALL
FPC	FLEXIBLE PIPE COUPLING
FPM	FEET PER MINUTE
FPS	FEET PER SECOND
FR	FRAME
FRP	FIBERGLASS REINFORCED PLASTIC
FS	FAR SIDE, FLOOR SINK, FINISHED SURFACE, FORGED STEEL FROTH SPRAY OR FACTOR OF SAFETY
FT	FEET OR FOOT
FT. LB	FOOT-POUND
FTG	FOOTING
FUT	FUTURE

GA	GAGE OR GAUGE
GAL	GALLON
GALV	GALVANIZED
GEN	GENERAL OR GENERATOR
GFA	GROOVED FLANGE ADAPTER
GI	GALVANIZED IRON
GL	GLASS
GL/BM	GLUE LAMINATED BEAM
GLV	GLOBE VALVE
GPD	GALLONS PER DAY
GPH	GALLONS PER HOUR
GPM	GALLONS PER MINUTE
GRD	GRADE OR GROUND
GR BRK	GRADE BREAK OR GRADE CHANGE
GRTG	GRATING
GV	GATE VALVE
GYP	GYPSUM

H/B	HOSE BIBB
HDR	HEADER
HDW	HARDWARE
HEX	HEXAGONAL
Hg	MERCURY
HGR	HANGER
HGT	HEIGHT
HM	HOLLOW METAL
HORIZ	HORIZONTAL
HP	HORSEPOWER OR HIGH PRESSURE
H/P	HIGH POINT
HR	HEATING RETURN OR HOUR
HTG	HEATING
HTR	HEATER
H & V	HEATING AND VENTILATING
HVAC	HEATING, VENTILATING AND AIR CONDITIONING
HWL	HIGH/WATER LEVEL
HWD	HARDWOOD
HWO	HANDWHEEL OPERATED
HV	HORIZONTAL AND VERTICAL CONTROL POINT
HYD	HYDRAULIC OR HYDRANT

ID	INSIDE DIAMETER
IF	INSIDE FACE
IN	INCH
INFL	INFLUENT
IN. LB	INCH-POUND
INSL	INSULATION OR INSULATED
INSTR	INSTRUMENT
INT	INTERIOR
INV	INVERT ELEVATION
IP	IRON PIPE
IPS	IRON PIPE SIZE
IRRG	IRRIGATION

JAN	JANITOR
JT	JOINT

K	KELVIN, KILO OR KARAT
KG	KILOGRAM
KM	KILOMETER
KV	KILOVOLT
KW	KILOWATT
KWH	KILOWATT HOUR

L/P	LOW POINT
L	LITER OR LENGTH
LAB	LABORATORY
LAM	LAMINATED
LAV	LAVATORY
LB	POUND
LDG	LANDING
LEV	LEVEL
LG	LENGTH OR LONG
LT	LEFT OR LIGHT
LWL	LOW WATER LEVEL
LWR	LOWER

M	METER OR MALE (PIPE THREAD)
MAG	MAGNETIC
MAN	MANUAL
MACH	MACHINE
MAX	MAXIMUM
MCC	MOTOR CONTROL CENTER
MECH	MECHANICAL
MED	MEDIUM
MEMB	MEMBRANE
MFR	MANUFACTURER
MFRD	MANUFACTURED
MGD	MILLION GALLONS PER DAY
MH	MANHOLE
MI	MALLEABLE IRON
MICRON	1/1,000,000 METER
MIL	MILITARY, 1/1,000 INCH
MIN	MINIMUM OR MINUTE
MIR	MIRROR
MISC	MISCELLANEOUS
MK	MARK
MO	MOTOR OPERATED OR MANSONRY OPENING
MOD	MODEL
MS	MOP SINK
MTC	MECHANICAL-TYPE COUPLING
MTD	MOUNTED
MTG	MOUNTING
MTL	MATERIAL OR METAL
MTR	MOTOR

N	NORTH
NBS	NATIONAL BUREAU OF STANDARDS
NC	NORMALLY CLOSED
NEC	NATIONAL ELECTRICAL CODE
NEMA	NATIONAL ELECTRICAL MANUFACTURERS ASSOCIATION
NFPA	NATIONAL FIRE PROTECTION ASSOCIATION
NF	NEAR FACE
NG	NATURAL GRADE OR NATURAL GAS
NIC	NOT IN CONTRACT
NO	NUMBER OR NORMALLY OPEN
NOM	NOMINAL
NPS	NOMINAL PIPE SIZE (FORMERLY I.P.S.)
NPT	NATIONAL PIPE THREAD
NRS	NON-RISING STEM
NS	NEAR SIDE
NTS	NOT TO SCALE

OC	OVER-CROSSING OR ON CENTER
OD	OUTSIDE DIAMETER OR OVERALL DIMENSION
OF	OVERFLOW OR OUTSIDE FACE
OFF	OFFICE
OH	OVER HEAD
OPER	OPERATOR OR OPERATING
OPNG	OPENING
OS & Y	OUTSIDE SCREW AND YOKE
OWG	OIL, WATER, GAS
OZ	OUNCE

P/S	POLE AND SHELF
P	POLE, PAGE OR PIPE
PART	PARTITION
PAVMT	PAVEMENT
PB	POLYBUTYLENE
PC	PRIMARY CLARIFIER OR PORTLAND CEMENT
PCC	PORTLAND CEMENT CONCRETE
PCOTG	PRESSURE CLEANOUT TO GRADE
PE	PLANT EFFLUENT, POLYELECTROLYTE POLYMER OR POLYETHYLENE
PG	PRESSURE GAGE
pH	HYDROGEN ION CONCENTRATION
PI	PLANT INFLUENT OR POINT OF INTERSECTION
PL	PLATE, PROPERTY LINE OR PLACE
PLAS	PLASTER OR PLASTIC
PLYWD	PLYWOOD
PNEU	PNEUMATIC
PNL	PANEL
PW	PRESSED METAL
POC	POINT OF CONNECTION
PP	POWER POLE OR POLYPROPYLENE
PLT	PLANT
PPD	POUNDS PER DAY
PPH	POUNDS PER HOUR
PPM	PARTS PER MILLION
PR	PAIR
PRCT	PRECAST
PREFAB	PREFABRICATED
PRESS	PRESSURE
PRV	PRESSURE REGULATING, RELIEF OR REDUCING VALVE
PS	PRESSURE SWITCH
PSF	POUNDS PER SQUARE FOOT
PSI	POUNDS PER SQUARE INCH
PSIA	POUNDS PER SQUARE INCH ABSOLUTE
PSIG	POUNDS PER SQUARE INCH GAUGE
PT	PAINT
PTDF	PRESSURE TREATED DOUGLAS FIR
PTFE	POLYTETRAFLUOROETHYLENE (TEFLON®)
PV	PLUG VALVE
PVC	POLYVINYL CHLORIDE
PVDF	POLYVINYLIDENE FLUORIDE (KYNAR®)

QT	QUARRY TILE
QTY	QUANTITY

R	RADIUS, RISER, RETURN OR RATE OF SLOPE
RAG	RETURN AIR GRILLE
RC	REINFORCED CONCRETE
RCP	REINFORCED CONCRETE PIPE
RD	ROOF DRAIN, ROUND, OR ROAD
RDWD	REDWOOD
RECIRC	RECIRCULATED
RED	REDUCER OR REDUCING
REF	REFERENCE OR REFER
REG	REGULATING
REIN	REINFORCE OR REINFORCED
RE-STL	REINFORCING STEEL
REQD	REQUIRED
RESIL	RESILENT
REV	REVISION
RFG	ROOFING
RF	ROOF OR RAISED FACE
RM	ROOM
RO	ROUGH OPENING
RPM	REVOLUTIONS PER MINUTE OR REINFORCED PLASTIC MORTAR
RR	RAILROAD
RS	RISING STEM
RT	RIGHT
RTP	REINFORCED THERMOSETTING PLASTIC
R/W	RIGHT OF WAY
RW	RECOVERY WELL
RWL	RAINWATER LEADER

S	SOUTH, SCUM, SINK, SECOND OR SLOPE
SA	SAMPLE
SBR	STYRENE BUTADENE (RUBBER)
SC	SPARE CHEMICAL OR SECONDARY CLARIFIER
SCD	SCREWED
SCFM	STANDARD CUBIC FEET PER MINUTE
SCH	SCHEDULE
SDR	STORM DRAINS
SEC	SECONDARY
SECT	SECTION
SER	SERIES
SETT	SETTLING
SH	SHOWER
SHT	SHEET OR SHELF
SHTG	SHEATHING
SIM	SIMILAR
SL	SLUDGE OR SLOPE
SOLN	SOLUTION
SLDG	SLIDING
SP	STATIC PRESSURE
SPECS	SPECIFICATIONS
SPECF	SPECIFIED
SQ	SQUARE
SS	SANITARY SEWER, STAINLESS STEEL OR SERVICE SINK
SSU	SECONDS SAYBOLT UNIVERSAL
STA	STATION
STC	SLEEVE-TYPE COUPLING
STD	STANDARD
STL	STEEL
STM	STEAM
STN	STAINLESS
STN STL	STAINLESS STEEL
STRUCT	STRUCTURAL OR STRUCTURE
SUCT	SUCTION
SV	SOLENOID VALVE
SWR	SIDEWALL REGISTER
SYM	SYMMETRICAL OR SYMBOL
SYS	SYSTEM

T	THERMOSTAT, TREAD OF STAIR, TANGENT OR TOP
TB	TACK BOARD
T & B	TOP AND BOTTOM
TBE	THREAD BOTH ENDS
TBM	TEMPORARY BENCH MARK
TC	TOP OF CURB
TEMP	TEMPERATURE OR TEMPORARY
T & G	TONGUE AND GROOVE
THK	THICK OR THICKNESS
THR	THRESHOLD
THRD	THREADED
TK	TANK
TOE	THREAD ONE END
TOL	TOILET
TP	TELEPHONE POLE OR TELEGRAPH POLE
TRANS	TRANSITION OR TRANSMITTER
TSB	TOP SET BASE
TV	THERMOSTATIC VALVE OR TELEVISION
TW	TOP OF WALL OR THERMOMETER WELL
TYP	TYPICAL

UB	UNION BONNET
UC	UNDER-CROSSING
UG	UNDERGROUND
UGC	UNDERGROUND CONDUIT
UH	UNIT HEATER
UL	UNDERWRITERS LABORATORIES
UR	URINAL

V	VACUUM, VALVE, VERTICAL, VENT, VOLT OR VOLUME
VAR	VARIES OR VARIABLE
VCP	VITRIFIED CLAY PIPE
VERT	VERTICAL
VOL	VOLUME
VTC	VENT TO CEILING
VTR	VENT THROUGH ROOF
VWC	VINYL WALL COVERING

W	WEST OR WASTE
W/	WITH
WC	WATER COLUMN OR WATER CLOSET
WCO	WALL CLEANOUT
WD	WOOD
WH	WATER HEATER
WI	WROUGHT IRON
W/O	WITHOUT
WOG	WATER, OIL OR GAS WORKING PRESSURE
WP	WATER PROOFING
WS	WATER SURFACE
WSTP	WATER STOP
WT	WEIGHT
WWM	WELDED WIRE MESH
WWP	WATER WORKING PRESSURE

XS	EXTRA STRONG
XXS	DOUBLE EXTRA STRONG

YD	YARD
YR	YEAR

Z	ZERO OR ZONE
ZN	ZINC

NOTES:

ADDITIONAL PIPING ABBREVIATIONS SHOWN ON PIPE SCHEDULE SHEET

ELECTRICAL ABBREVIATIONS SHOWN ON ELECTRICAL SHEETS

ADDITIONAL HEATING, VENTILATING AND AIR CONDITIONING ABBREVIATIONS SHOWN ON MECHANICAL SHEETS

ADDITIONAL ABBREVIATIONS CONFORM TO ANSI STANDARD ABBREVIATIONS Z32.2.3

T-2

R.H. L.H. DASH NO	NO REQ	SIZE & DESCRIPTION OF MATERIAL			
SCALE.	LIMITS ON DIM. UNLESS OTHERWISE NOTED. ANGULAR	FRAC. DEC.		SIGNATURE	DATE
			ENGR		
			DWN		
FAR NO. 292116	LOCATION 47A-ID-1-A1		CKD		
			APPVD		
			APPVD		

TITLE SOIL / GROUNDWATER REMEDIAL DESIGN
C-6 TORRANCE FACILITY
ABBREVIATIONS

DOUGLAS AIRCRAFT COMPANY
MCDONNELL DOUGLAS CORPORATION
FACILITIES

CI-701-4-111498

SHEET OF

MCDONNELL DOUGLAS CORPORATION - THIS INFORMATION IS SUBJECT TO DATA RIGHTS LEGENDS AT THE BEGINNING OF THE DOCUMENT.

MONTGOMERY WATSON
Pasadena, California

BOE-C6-0061171

MASONRY
CAST IRON
STEEL
BRONZE
INSULATION
GRAVEL
CONCRETE
EARTH
SAND
ALUMINUM OR METAL DECKING
CHECKERED PLATE
SPAN — GRATING
PLASTIC, RUBBER OR NEOPRENE
WOOD (FINISH)
WOOD (ROUGH FRAMING) OR OPENING OR DEPRESSION IN SLAB OR WALL
12x24 — DUCT (FIRST DIMENSION DUCT SIDE SHOWN, SECOND DIMENSION DUCT SIDE NOT SHOWN)
24x12 — SUPPLY OR OUTSIDE AIR DUCT (FIRST DIMENSION, DUCT WIDTH)
24x12 — EXHAUST OR RETURN AIR DUCT (FIRST DIMENSION, DUCT WIDTH)
SIZE / CFM — CEILING SUPPLY DIFFUSER (SIZE IN INCHES)
SIZE / CFM — CEILING RETURN OR EXHAUST AIR GRILLE OR REGISTER (SIZE IN INCHES, WIDTH X HEIGHT)
SIZE / CFM — EXHAUST OR RETURN AIR GRILLE OR REGISTER (SIZE IN INCHES, WIDTH X HEIGHT)
SIZE / CFM — SUPPLY GRILLE OR REGISTER (SIZE IN INCHES, WIDTH X HEIGHT)
AIR TURNING VANES IN DUCT
DD — DEFLECTING DAMPER
FHC — FIRE HOSE CABINET
FE — FIRE EXTINGUISHER
UNIT HEATER
℄ — CENTERLINE
PROPERTY LINE
NEW STRUCTURE OR FACILITY
EXISTING STRUCTURE OR FACILITY
FUTURE STRUCTURE OR FACILITY
NEW FENCE
EXISTING FENCE
NEW PIPELINE (CIVIL SHEETS) 36" DIA. AND LARGER
NEW PIPELINE (CIVIL SHEETS) 12" DIA. TO 34" DIA.
NEW PIPELINE (CIVIL SHEETS) 10" DIA. AND SMALLER
EXISTING PIPELINE

123 — CONTOUR LINE, FINISHED GRADE
123 — CONTOUR LINE, EXISTING GRADE
123.20 — FINISHED ELEVATION
(123.20) — EXISTING ELEVATION
TOP / TOE — CUT OR FILL SLOPE TO BE CONSTRUCTED
NEW A.C. PAVING
EXISTING A.C. PAVING
RAILING
FH — FIRE HYDRANT
MH — MANHOLE
PCOTG — PRESSURE CLEANOUT TO GRADE
WCO — WALL CLEANOUT
FCO — FLOOR CLEANOUT
COTG — CLEANOUT TO GRADE
BLOW OFF ASSEMBLY
HUB DRAIN
FLOOR DRAIN
FLOOR SINK
DRAIN TRAP
SOIL BORING
BENCH MARK
HORIZONTAL AND VERTICAL CONTROL POINT
VAULT OR JUNCTION STRUCTURE
CHANGE IN PIPING MATERIAL
ROUND OR DIAMETER
SQUARE
@ — AT
∠ — ANGLE
24" RW-RCP — PIPE SIZE, FLUID ABBREVIATION AND TYPE OF PIPE
2" UW (2) — PIPE CALLOUT (SEE PIPING SCHEDULE)
ME-2 — EQUIPMENT NUMBER (SEE EQUIPMENT SCHEDULE)
BACKWATER VALVE
BACKFLOW PREVENTER
STOP GATE
SLIDE GATE
SLUICE GATE

GATE VALVE, BURIED WITH VALVE BOX
BUTTERFLY VALVE, BURIED WITH VALVE BOX
ECCENTRIC PLUG VALVE, BURIED WITH VALVE BOX
LUBRICATED PLUG VALVE, BURIED WITH VALVE BOX
GATE VALVE
BUTTERFLY VALVE
ECCENTRIC PLUG VALVE
LUBRICATED PLUG VALVE
GLOBE VALVE
BALL VALVE
DIAPHRAGM VALVE
CHECK VALVE
PRESSURE REGULATING VALVE
BACK-PRESSURE VALVE
M P — MOTOR OPERATOR FOR VALVES (M = ELECTRIC, P = PNEUMATIC)
T — TEMPERATURE CONTROL VALVE
S — SOLENOID VALVE
MULTIPORT VALVE - 3 WAY
MULTIPORT VALVE - 4 WAY
FLOAT OPERATED VALVE
NEEDLE VALVE
PRESSURE RELIEF VALVE
ANGLE VALVE
HOSE BIBB (H/B)
B — BUBBLER LEVEL CONTROL
CENTRIFUGAL OR TURBINE PUMP OR FAN
METERING PUMP
PROGRESSING CAVITY, POSITIVE DISPLACEMENT PUMP
BLOWER OR COMPRESSOR
INJECTOR OR EDUCTOR
F/A — FLAME ARRESTER
AIR VACUUM AND AIR RELEASE ASSEMBLY
THERMOMETER
PIPE ANCHOR

T — ROOM THERMOSTAT
G — PRESSURE GAUGE
G — PRESSURE GAUGE WITH DIAPHRAGM SEAL
S — PRESSURE SWITCH
S — PRESSURE SWITCH WITH DIAPHRAGM SEAL
FLANGED FITTING
WELDED FITTING
MECHANICAL-TYPE FITTING (GROOVED)
SCREWED, SOCKET-WELD, BELL AND SPIGOT OR HUBLESS FITTING
SLEEVE-TYPE COUPLING
FLANGED ADAPTER COUPLING
FLANGED ADAPTER - SET SCREW TYPE
EXPANSION JOINT
MECHANICAL TYPE COUPLING
FLEXIBLE COUPLING
UNION
QUICK DISCONNECT COUPLER
CAPPED END OR PLUGGED END
BLIND FLANGE
REDUCER OR INCREASER
CUT PIPE
STRAINER
DRAIN
FLOW TUBE
M M — MAGNETIC METER
D M — DENSITY METER
P M — PROPELLER METER
ORIFICE PLATE AND FLANGES
ROTAMETER
T — CONDENSATE TRAP
PIPE SUPPORT (IN PLAN ONLY)
CB — CATCH BASIN
PULSATION DAMPENER
EXPANSION CHAMBER WITH RUPTURE DISC
RUPTURE DISC
FG — FLOW SIGHT GLASS

SECTION AND DETAIL IDENTIFICATION

SECTION IDENTIFICATION

(1) SECTION CUT ON DRAWING G-1:

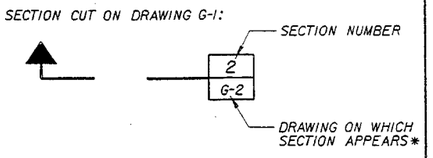

(2) ON DRAWING G-2 THIS SECTION IS IDENTIFIED AS:

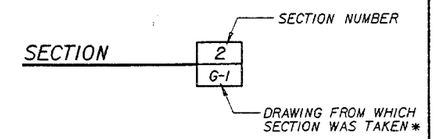

DETAIL IDENTIFICATION

(1) DETAIL CALL-OUT ON DRAWING G-2 AS:

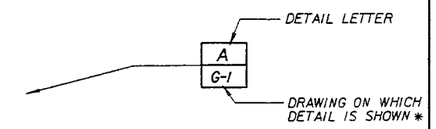

(2) ON DRAWING G-1 THIS DETAIL IDENTIFIED AS:

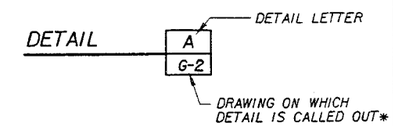

*NOTE: IF PLAN AND SECTION (OR DETAIL CALL-OUT AND DETAIL) ARE SHOWN ON SAME DRAWING, DRAWING NUMBER IS REPLACED BY A LINE.

STANDARD DETAIL IDENTIFICATION

(1) DETAIL CALL-OUT ON PLAN OR SECTION:

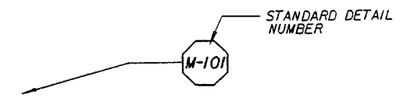

(2) ON DISCIPLINES STANDARD DETAIL DRAWING IS IDENTIFIED AS:

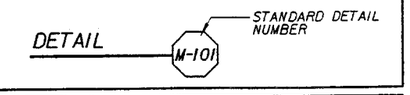

NOTES:
(1) ELECTRICAL SYMBOLS SHOWN ON ELECTRICAL SHEETS.
(2) FOR WELDING SYMBOLS USE AMERICAN WELDING SOCIETY STANDARD SYMBOLS. SEE AMERICAN INSTITUTE OF STEEL CONSTRUCTION MANUAL.

REV. 091587

T-3

R.H.	L.H.	NO REQ	SIZE & DESCRIPTION OF MATERIAL			
DASH NO					SIGNATURE	DATE
SCALE. NONE		LIMITS ON DIM. UNLESS OTHERWISE NOTED. ANGULAR	FRAC. DEC.	ENGR		
				DWN		
FAR NO. 292116		LOCATION 47A-1D-1-A1		CKD		
				APPVD		
				APPVD		

TITLE SOIL / GROUNDWATER REMEDIAL DESIGN
C-6 TORRANCE FACILITY
SYMBOLS

DOUGLAS AIRCRAFT COMPANY
MCDONNELL DOUGLAS CORPORATION
FACILITIES

CI-701-4-111498

SHEET OF

MONTGOMERY WATSON
Pasadena, California

MCDONNELL DOUGLAS CORPORATION - THIS INFORMATION IS SUBJECT TO DATA RIGHTS LEGENDS AT THE BEGINNING OF THE DOCUMENT.

BOE-C6-0061172

GENERAL NOTES

1. TOPOGRAPHIC SURVEY: TOPOGRAPHIC SURVEY FOR THIS PROJECT WAS PREPARED BY DUBRON AND ASSOCIATES SURVEYORS IN FEBRUARY , 1994. ADDITIONAL INFORMATION WAS OBTAINED FROM PLANS PROVIDED BY DOUGLAS AIRCRAFT COMPANY FACILITIES DEPARTMENT.

2. SPECIAL PRECAUTIONS: CONTRACTOR SHALL TAKE EXTREME PRECAUTIONS TO PROTECT EXISTING IMPROVEMENTS DURING CONSTRUCTION. ANY AND ALL EXISTING IMPROVEMENTS SHOWN TO REMAIN BUT DAMAGED DURING CONSTRUCTION, SHALL BE REPAIRED AND/OR REPLACED TO DAC'S SATISFACTION, AT CONTRACTOR'S EXPENSE.

3. DEMOLITION AND REMOVALS: ALL SAWCUTTING SHALL PENETRATE THE FULL DEPTH OF EXISTING PAVEMENT. THE CONTRACTOR'S PROPOSED METHOD OF DEMOLITION AND REMOVALS SHALL BE REVIEWED AND APPROVED BY THE DAC CONSTRUCTION MANAGER PRIOR TO CONSTRUCTION.

4. ACCESS, COORDINATION AND SCHEDULES: ACCESS TO THE PROJECT SHALL BE COORDINATED WITH THE DAC CONSTRUCTION MANAGER. DUE TO PRODUCTION SCHEDULES, TIME IS OF THE ESSENCE. ALL WORK SHOWN HEREIN SHALL BE COMPLETED AND OPENED TO TRAFFIC BY APPROVED SCHEDULES OF OPERATIONS PRESENTED BY THE CONTRACTOR TO THE DAC CONSTRUCTION MANAGER PRIOR TO COMMENCING WORK.

5. UTILITIES: THE EXISTENCE AND LOCATION OF UNDERGROUND UTILITY PIPES, CABLES, DUCTS, AND SUBSTRUCTURES SHOWN ON THE PLANS WERE OBTAINED BY A SEARCH OF AVAILABLE RECORDS. APPROVALS OF THESE PLANS DO NOT GUARANTEE THE ACCURACY OR COMPLETENESS OF THE LOCATION OR EXISTENCE OF THESE UTILITIES WITHIN THE LIMITS OF THIS PROJECT. THE CONTRACTOR SHALL TAKE ALL PRECAUTIONARY MEASURES TO PROTECT BOTH THE UTILITY PIPES, CABLES, DUCTS AND SUBSTRUCTURES SHOWN HEREIN AND THOSE NOT SHOWN ON THE PLANS BUT ENCOUNTERED DURING CONSTRUCTION.

6. DIFFERENT CONDITIONS: WHERE CONDITIONS ARE ENCOUNTERED WHICH APPEAR DIFFERENT FROM THOSE INDICATED ON THE PLANS, CONTRACTOR SHALL NOTIFY THE DAC CONSTRUCTION MANAGER PRIOR TO THE PERFORMANCE OF WORK.

7. DEVIATION FROM PLANS: NO DEPARTURE FROM THESE PLANS, DETAILS, OR NOTES WILL BE PERMITTED WITHOUT PRIOR WRITTEN AUTHORIZATION FROM THE DAC CONSTRUCTION MANAGER. THE CONTRACTOR SHALL BE SOLELY RESPONSIBLE FOR CONSEQUENCES OF ANY CHANGE MADE WITHOUT SUCH AN AUTHORIZATION.

8. CLEAN-UP AND DISPOSAL: THE CONTRACTOR SHALL CLEAN THE CONSTRUCTION AREA THOROUGHLY, TO THE SATISFACTION OF THE DAC CONSTRUCTION MANAGER, UPON COMPLETION OF WORK. THE CONTRACTOR SHALL DISPOSE OF ALL MATERIAL SHOWN TO BE REMOVED AND ALL UNSUITABLE MATERIALS ENCOUNTERED IN A LEGAL MANNER AT CONTRACTOR'S EXPENSE.

9. PROVISIONS SHALL BE MADE FOR CONTRIBUTORY DRAINAGE AT ALL TIMES.

10. THE CONTRACTOR SHALL FURNISH ALL LABOR, MATERIALS, SUPERVISION, TOOLS, EQUIPMENT, WAREHOUSING, TRANSPORTATION, TEMPORARY FACILITIES, AND OTHER NECESSARY ITEMS AS REQUIRED TO COMPLETE THE WORK DETAILED.

11. THE CONTRACTOR SHALL OBTAIN AND PAY FOR ALL PERMITS AND FEES, REQUIRED BY ANY GOVERNING PUBLIC AGENCY.

12. THE CONTRACTOR SHALL PROVIDE ADEQUATE SUPERVISION FOR ALL JOB SITE OPERATIONS. THE SUPERVISION SHALL HAVE THE NECESSARY KNOWLEDGE, EXPERIENCE, AND AUTHORITY TO CONDUCT THE REQUIRED ACTIVITIES IN COMPLIANCE WITH THESE NOTES.

13. DAILY CONSTRUCTION ACTIVITIES AND MATERIAL STORAGE SHALL BE CONDUCTED SO AS TO PROVIDE FOR SAFETY OF PERSONNEL WORKING IN THE AREA.

14. THE CONTRACTOR SHALL PROVIDE ALL TEMPORARY FACILITIES REQUIRED FOR A SAFE CONSTRUCTION OPERATION. CARE SHALL BE TAKEN TO PROTECT EXISTING CONSTRUCTION AND EQUIPMENT IN THE AREA OF CONSTRUCTION.

CONSTRUCTION NOTES

1. REFERENCE SPECIFICATIONS: UNLESS MODIFIED BY THE SPECIFICATION MANUAL (OR IN SUBSEQUENT PLAN REVISIONS), ALL WORK SHALL CONFORM TO THE "STANDARD SPECIFICATIONS FOR PUBLIC WORKS CONSTRUCTION", LATEST EDITION AND SUPPLEMENTS.

2. ASPHALT CONCRETE:

   FOR 1" A.C. OVERLAY – ASPHALT CONCRETE SHALL BE TYPE C2 – AR 8000 AND SHALL CONFORM TO THE REQUIREMENTS IN SECTION 203 – 6 ASPHALT CONCRETE OF THE "STANDARD SPECIFICATIONS." DISTRIBUTION, SPREADING AND COMPACTION SHALL BE IN ACCORDANCE WITH SECTION 302 – 5, ASPHALT CONCRETE PAVEMENT.

   ALL OTHER AREAS – ASPHALT CONCRETE SHALL BE TYPE B – AR 8000 AND SHALL CONFORM TO THE REQUIREMENTS IN SECTION 203 – 6 ASPHALT CONCRETE OF THE "STANDARD SPECIFICATIONS." DISTRIBUTION, SPREADING AND COMPACTION SHALL BE IN ACCORDANCE WITH SECTION 302 – 5, ASPHALT CONCRETE PAVEMENT.

3. PORTLAND CEMENT CONCRETE: CONCRETE WHICH IS POURED IN PLACE CONCRETE SHALL HAVE A MINIMUM STRENGTH OF 3,000 P.S.I. AT 28 DAYS.

4. THE BASE MATERIAL USED IN THIS CONTRACT SHALL CONSIST OF PROCESSED CRUSHED AGGREGATE BASE, COARSE GRADE, AS SPECIFIED IN SECTION 200 OF THE "STANDARD SPECIFICATIONS."

5. STRAIGHT GRADES SHALL RUN BETWEEN CONTOURS AND SPOT ELEVATIONS, OR UNLESS OTHERWISE INDICATED, JOINING EXISTING PAVEMENT.

6. THE DEGREE OF COMPACTION REQUIRED IS EXPRESSED AS A PERCENTAGE OF THE MAXIMUM OBTAINED BY THE TEST PROCEDURE PRESENTED IN ASTM D1557. METHOD B OR D.

7. SPRAY PAINT LINES, DIRECTIONAL ARROWS, ETC. AFFECTED BY EXCAVATION TO SIZE AND COLOR TO MATCH EXISTING. LINES SHALL BE CLEAN AND SHARP AFTER TWO (2) COATS, NOT LESS THAN 20 MILS MINIMUM THICKNESS. PAINT SHALL BE SINCLAIR VX25 TRAFFIC PAINT OR SOCONY 18-W-3329 OR EQUAL.

BENCHMARK:

THE VERTICAL BENCHMARK FOR THIS PROJECT IS THE OUTER STEEL CASING OF BORING B-6. THE PROJECT BENCHMARK ELEVATION FOR BORING B-6 IS 100.00.

HORIZONTAL COORDINATES (GRID VALUES) ARE ON AN ASSUMED GRID SYSTEM.

C-1

R.H. L.H. DASH NO	NO REQ	SIZE & DESCRIPTION OF MATERIAL			
SCALE.	LIMITS ON DIM. UNLESS OTHERWISE NOTED. ANGULAR	FRAC. DEC.		SIGNATURE	DATE
			ENGR		
			DWN		
FAR NO.		LOCATION	CKD		
			APPVD		
			APPVD		

TITLE SOIL / GROUNDWATER REMEDIAL DESIGN
C-6 TORRANCE FACILITY
TITLE SHEET

DOUGLAS AIRCRAFT COMPANY
MCDONNELL DOUGLAS CORPORATION
FACILITIES

SHEET OF

MCDONNELL DOUGLAS CORPORATION – THIS INFORMATION IS SUBJECT TO DATA RIGHTS LEGENDS AT THE BEGINNING OF THE DOCUMENT.

BUDLONG & ASSOCIATES, INC.
CONSULTING ENGINEERS
28720 ROADSIDE DRIVE, SUITE 252 AGOURA HILLS, CA 91301
(818) 880-8000 JOB NO. 40101

MONTGOMERY WATSON
Pasadena, California

4/18/94
FILE No. H:\PRJ\DOUGLAS\MISC-1\
BOE-C6-0061173

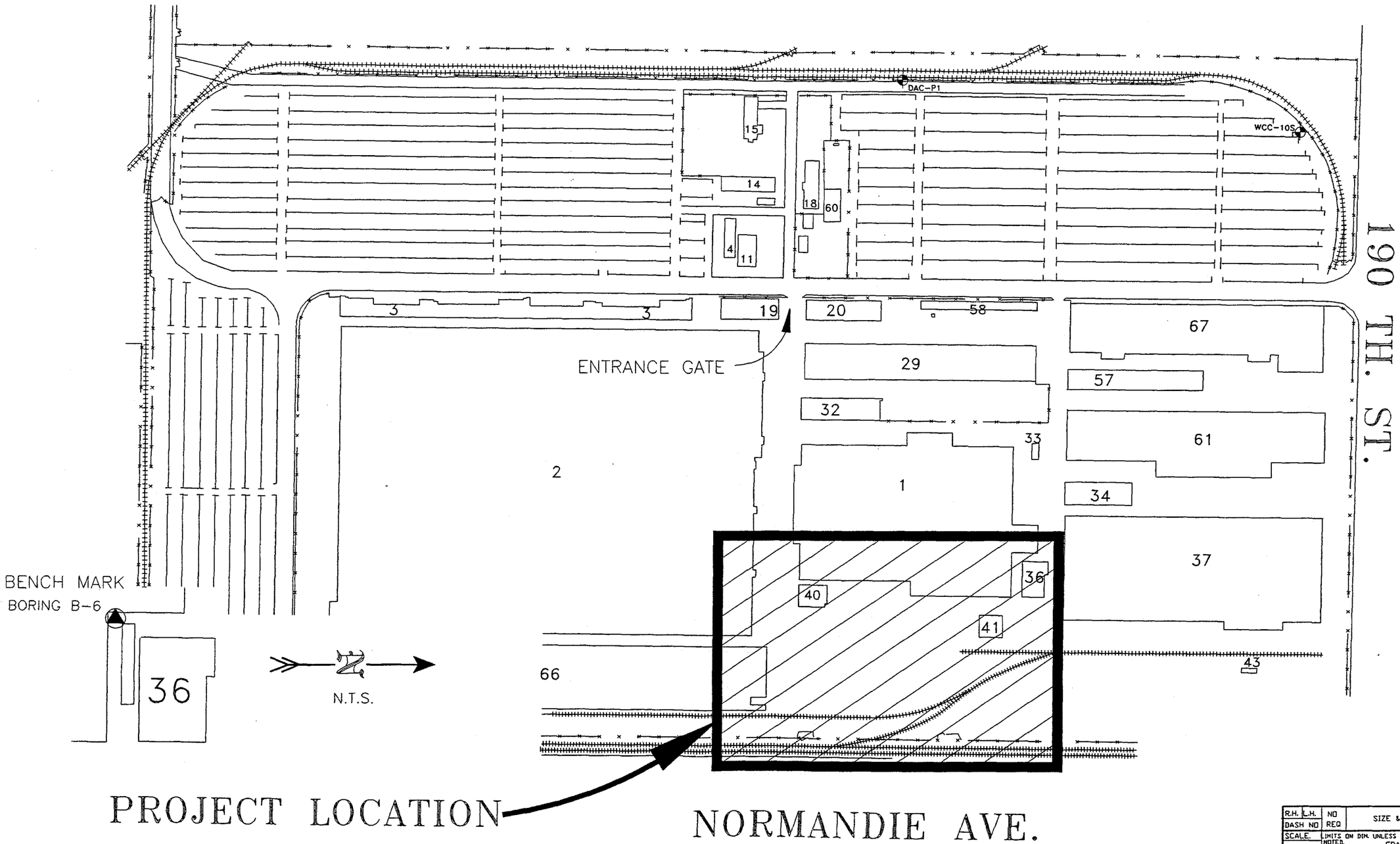

C-2

R.H. L.H. DASH NO	NO REQ	SIZE & DESCRIPTION OF MATERIAL		
SCALE.	LIMITS ON DIM. UNLESS OTHERWI NOTED. ANGULAR	FRAC. DEC.	SIGNATURE	DATE
FAR NO.		LOCATION	ENGR / DWN / CKD / APPV'D / APPV'D	

MCDONNELL DOUGLAS CORPORATION - THIS INFORMATION IS SUBJECT TO DATA RIGHTS LEGENDS AT THE BEGINNING OF THE DOCUMENT.

TITLE SOIL / GROUNDWATER REMEDIAL DESIGN
C-6 TORRANCE FACILITY
PROJECT LOCATION

DOUGLAS AIRCRAFT COMPANY
MCDONNELL DOUGLAS CORPORATION
FACILITIES

SHEET OF

BUDLONG & ASSOCIATES, INC.
CONSULTING ENGINEERS
28720 ROADSIDE DRIVE, SUITE 252 AGOURA HILLS, CA 91301
(818) 880-8000 JOB NO. 40101

MONTGOMERY WATSON
Pasadena, California

FILE No.

BOE-C6-0061174

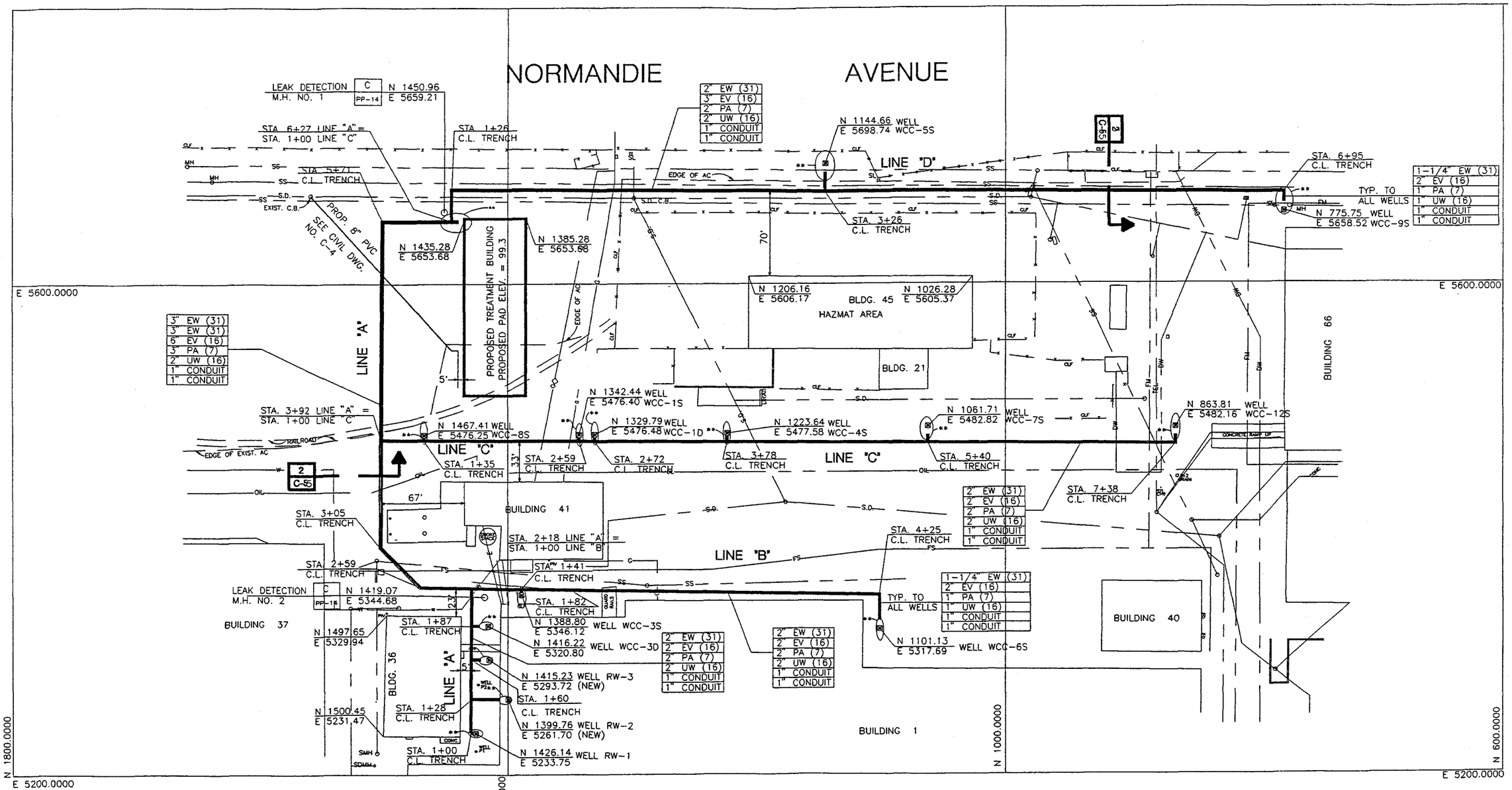

NOTES

1. ** FOR PIPING IN THIS AREA, SEE DWG. PP-14, DETAIL A.
2. ALL DIMENSIONS TO BE FIELD VERIFIED BY CONTRACTOR.
3. FOR PIPE SCHEDULE, SEE DWG. NO. C-6.
4. PRIOR TO START OF CONSTRUCTION, CONTRACTOR SHALL VERIFY EXACT VERTICAL AND HORIZONTAL LOCATION OF EXISTING UTILITIES. ANY DISCREPANCY SHALL BE REPORTED TO DCA CONSTRUCTION MANAGER PRIOR TO LAYING OF PIPES.

0 20 40 80
SCALE: 1"=40'

MCDONNELL DOUGLAS CORPORATION - THIS INFORMATION IS SUBJECT TO DATA RIGHTS LEGENDS AT THE BEGINNING OF THE DOCUMENT.

BUDLONG & ASSOCIATES, INC.
CONSULTING ENGINEERS
28720 ROADSIDE DRIVE, SUITE 252 AGOURA HILLS, CA 91301
(818) 880-8000 JOB NO. 40101

MONTGOMERY WATSON
Pasadena, California

C-3

R.H. L.H. DASH NO	NO REQ	SIZE & DESCRIPTION OF MATERIAL
SCALE.	LIMITS ON DIM. UNLESS OTHERWISE NOTED. ANGULAR FRAC. DEC.	SIGNATURE / DATE: ENGR, DWN, CKD, APPVD, APPVD
FAR NO.	LOCATION	

TITLE SOIL / GROUNDWATER REMEDIAL DESIGN
C-6 TORRANCE FACILITY
PIPING PLAN

DOUGLAS AIRCRAFT COMPANY
MCDONNELL DOUGLAS CORPORATION
FACILITIES

SHEET OF

FILE NO.

BOE-C6-0061175

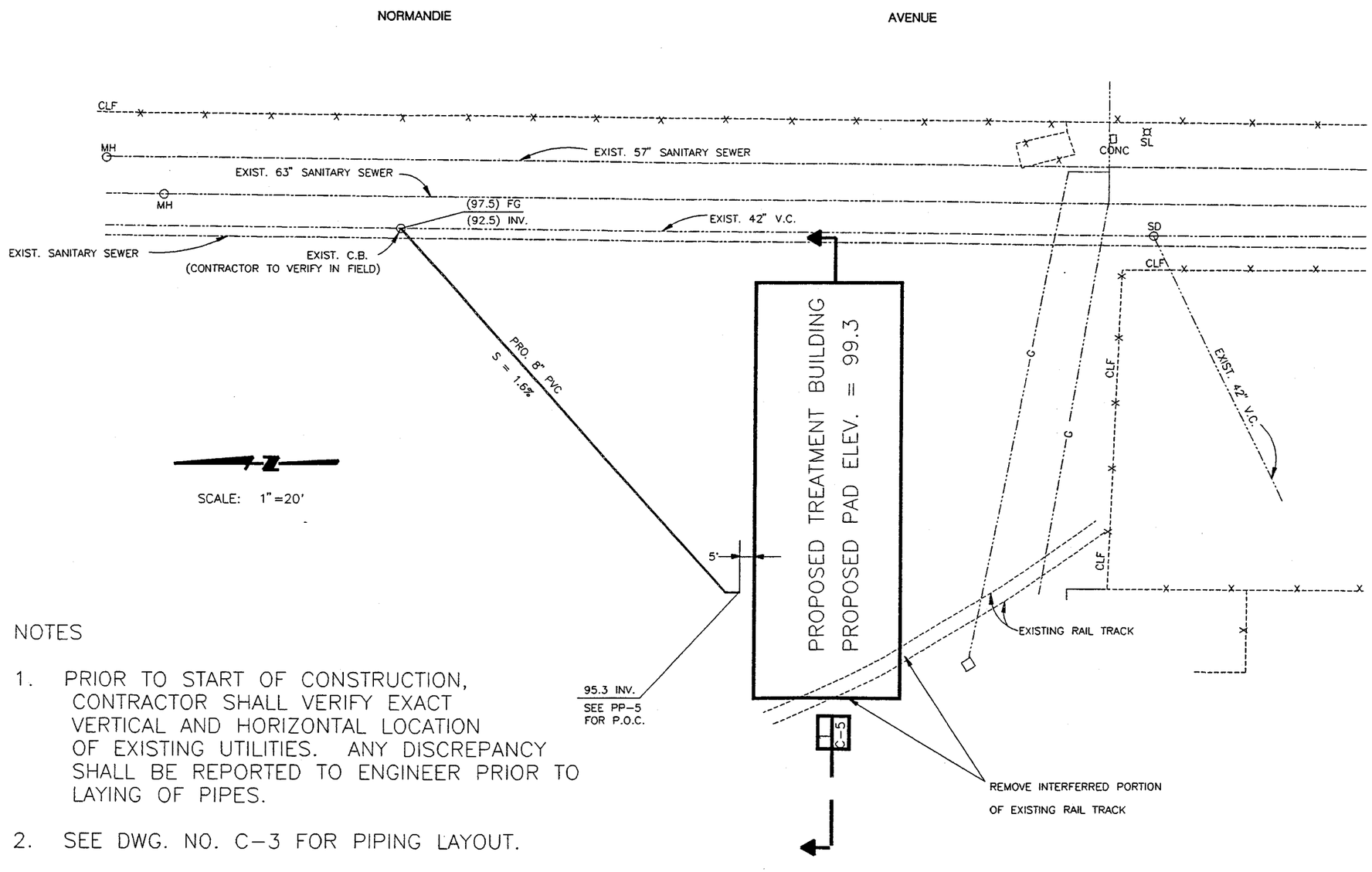

NOTES

1. PRIOR TO START OF CONSTRUCTION, CONTRACTOR SHALL VERIFY EXACT VERTICAL AND HORIZONTAL LOCATION OF EXISTING UTILITIES. ANY DISCREPANCY SHALL BE REPORTED TO ENGINEER PRIOR TO LAYING OF PIPES.
2. SEE DWG. NO. C-3 FOR PIPING LAYOUT.
3. SEE DWG. NO. C-6 FOR PIPE SCHEDULE.

C-4

R.H. L.H. DASH NO	NO REQ	SIZE & DESCRIPTION OF MATERIAL

SCALE.	LIMITS ON DIM. UNLESS OTHERWISE NOTED. ANGULAR	FRAC. DEC.		SIGNATURE	DATE
			ENGR		
			DWN		
FAR NO.	LOCATION		CKD		
			APPVD		
			APPVD		

MCDONNELL DOUGLAS CORPORATION – THIS INFORMATION IS SUBJECT TO DATA RIGHTS LEGENDS AT THE BEGINNING OF THE DOCUMENT.

TITLE SOIL / GROUNDWATER REMEDIAL DESIGN
C-6 TORRANCE FACILITY
STORM DRAIN PIPE

DOUGLAS AIRCRAFT COMPANY
MCDONNELL DOUGLAS CORPORATION
FACILITIES

SHEET OF

BUDLONG & ASSOCIATES, INC.
CONSULTING ENGINEERS
28720 ROADSIDE DRIVE, SUITE 252 AGOURA HILLS, CA 91301
(818) 880-8000 JOB NO. 40101

MONTGOMERY WATSON
Pasadena, California

FILE No. 220.0083

BOE-C6-0061176

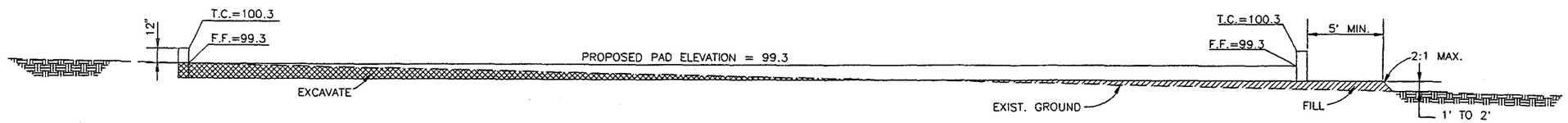

1 / C-4 PROPOSED PAD SECTION
NTS

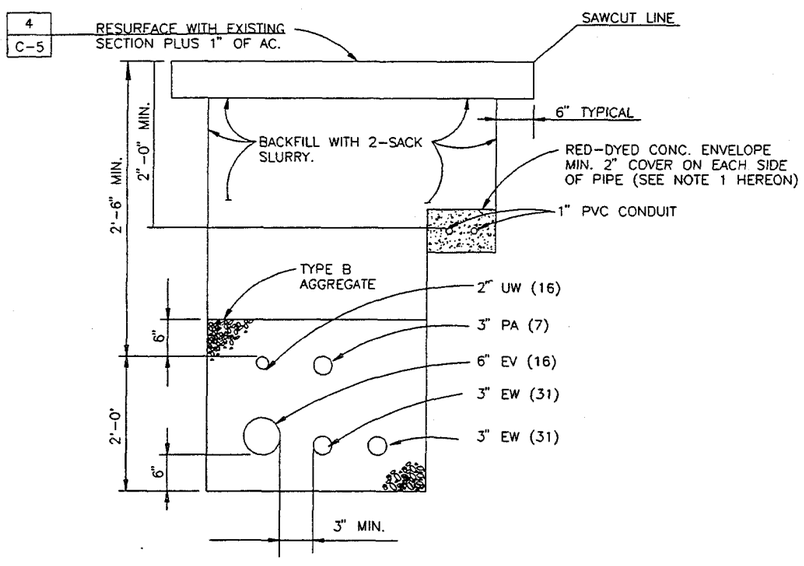

2 / C-3 TYP. UTILITY TRENCH SECTION
NTS

LINE "A" – STA. 3+92 TO PROPOSED TREATMENT PAD

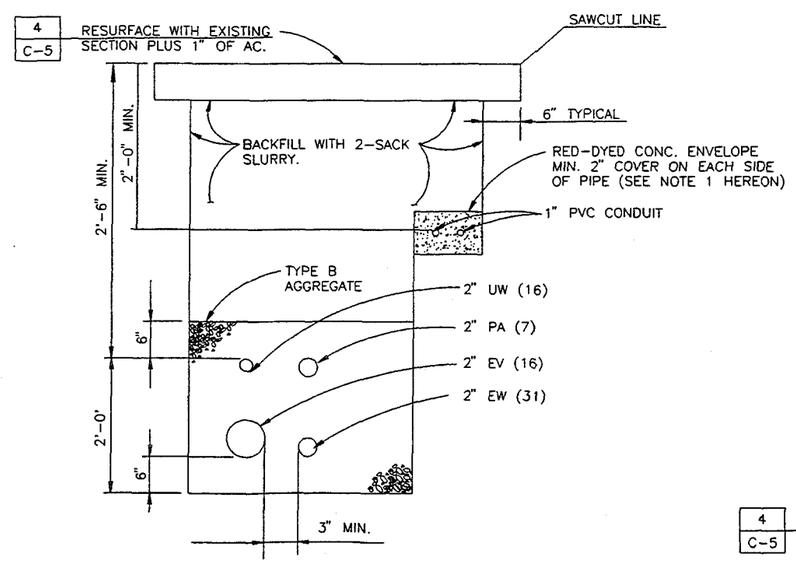

3 / C-3 TYP. UTILITY TRENCH SECTION
NTS

LINE "C" – STA. 3+78 TO STA. 7+38

LINE "D" – STA. 3+26 TO STA. 6+95

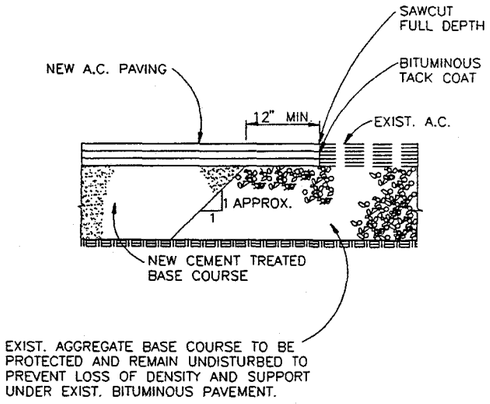

4 / C-5 ASPHALT PAVEMENT JOINT DETAIL

C-5

R.H. L.H. DASH NO	NO REQ	SIZE & DESCRIPTION OF MATERIAL			
SCALE: AS NOTED	LIMITS ON DIM. UNLESS OTHERWISE NOTED. ANGULAR	FRAC. DEC.		SIGNATURE	DATE
FAR NO. 231119		LOCATION 47A-1D-1-A1	ENGR / DWN / CKD / APPVD / APPVD		

TITLE SOIL / GROUNDWATER REMEDIAL DESIGN
C-6 TORRANCE FACILITY
SECTIONS AND DETAILS

DOUGLAS AIRCRAFT COMPANY
MCDONNELL DOUGLAS CORPORATION
FACILITIES

SHEET OF

MCDONNELL DOUGLAS CORPORATION - THIS INFORMATION IS SUBJECT TO DATA RIGHTS LEGENDS AT THE BEGINNING OF THE DOCUMENT.

BUDLONG & ASSOCIATES, INC.
CONSULTING ENGINEERS
28720 ROADSIDE DRIVE, SUITE 252 AGOURA HILLS, CA 91301
(818) 880-8000 JOB NO. 40101

MONTGOMERY WATSON
Pasadena, California

BOE-C6-0061177

PROPOSED PIPES SCHEDULE

STATIONS	EV	PA	EW		UW	CONDUIT	CONDUIT
			LT I	LT II			
LINE "A"							
1+00 TO 1+28	2"	2"	2"		1"	1"	1"
1+28 TO 1+60	2"	2"	2"		1"	1"	1"
1+60 TO 1+87	2"	2"	2"		1"	1"	1"
1+87 TO 2+18	3"	2"	3"		1"	1"	1"
2+18 TO 2+59	4"	2"	3"		1"	1"	1"
2+59 TO 3+05	4"	2"	3"		1"	1"	1"
3+05 TO 3+92	4"	2"	3"		1"	1"	1"
3+92 TO 5+71	6"	3"	3"	3"	1"	1"	1"
5+71 TO P.O.C.	6"	3"	3"	3"	1"	1"	1"
LINE "B"							
1+00 TO 1+41	2"	2"	2"		1"	1"	1"
1+41 TO 4+25	2"	2"	2"		1"	1"	1"
LINE "C"							
1+00 TO 1+35	4"	2"		3"	1"	1"	1"
1+35 TO 2+22	4"	2"		3"	1"	1"	1"
2+22 TO 2+59	4"	2"		3"	1"	1"	1"
2+59 TO 2+72	3"	2"		3"	1"	1"	1"
2+72 TO 3+78	3"	2"		2"	1"	1"	1"
3+78 TO 5+40	2"	2"		2"	1"	1"	1"
5+40 TO 7+38	2"	2"		2"	1"	1"	1"
LINE "D"							
1+00 TO 3+26	3"	2"		2"	1"	1"	1"
3+26 TO 6+95	2"	2"		2"	1"	1"	1"

PIPES TO WELLS	EV	PA	EW		UW	CONDUIT	CONDUIT
LINE "A"			LT I	LT II			
1+00 TO RW-1	2"	1"	1.25"		1"	1"	1"
1+28 TO RW-2	2"	1"	1.25"		1"	1"	1"
1+60 TO RW-3	2"	1"	1.25"		1"	1"	1"
1+87 TO WCC-3D	2"	1"	1.25"		1"	1"	1"
LINE "B"							
1+41 TO WCC-3S	2"	1"	1.25"		1"	1"	1"
4+25 TO WCC-6S	2"	1"	1.25"		1"	1"	1"
LINE "C"							
1+35 TO WCC-8S	2"	1"		1.25"	1"	1"	1"
2+59 TO WCC-1S	2"	1"		1.25"	1"	1"	1"
2+72 TO WCC-1D	2"	1"		1.25"	1"	1"	1"
3+78 TO WCC-4S	2"	1"		1.25"	1"	1"	1"
5+40 TO WCC-7S	2"	1"		1.25"	1"	1"	1"
7+38 TO WCC-12S	2"	1"		1.25"	1"	1"	1"
LINE "D"							
5+41 TO WCC-5S	2"	1"		1.25"	1"	1"	1"
9+10 TO WCC-9S	2"	1"		1.25"	1"	1"	1"

C-6

R.H. L.H. DASH NO	NO REQ	SIZE & DESCRIPTION OF MATERIAL			
SCALE. AS NOTED	LIMITS ON DIM. UNLESS OTHERWISE NOTED. ANGULAR	FRAC. DEC.		SIGNATURE	DATE
			ENGR		
			DWN		
FAR NO. 2921116	LOCATION 47A-1D-1-A1		CKD		
			APPVD		
			APPVD		

TITLE SOIL / GROUNDWATER REMEDIAL DESIGN
C-6 TORRANCE FACILITY
PIPE SCHEDULE

DOUGLAS AIRCRAFT COMPANY
MCDONNELL DOUGLAS CORPORATION
FACILITIES

SHEET OF

MCDONNELL DOUGLAS CORPORATION - THIS INFORMATION IS SUBJECT TO DATA RIGHTS LEGENDS AT THE BEGINNING OF THE DOCUMENT.

BUDLONG & ASSOCIATES, INC.
CONSULTING ENGINEERS
28720 ROADSIDE DRIVE, SUITE 252 AGOURA HILLS, CA 91301
(818) 880-8000 JOB NO. 40101

MONTGOMERY WATSON
Pasadena, California

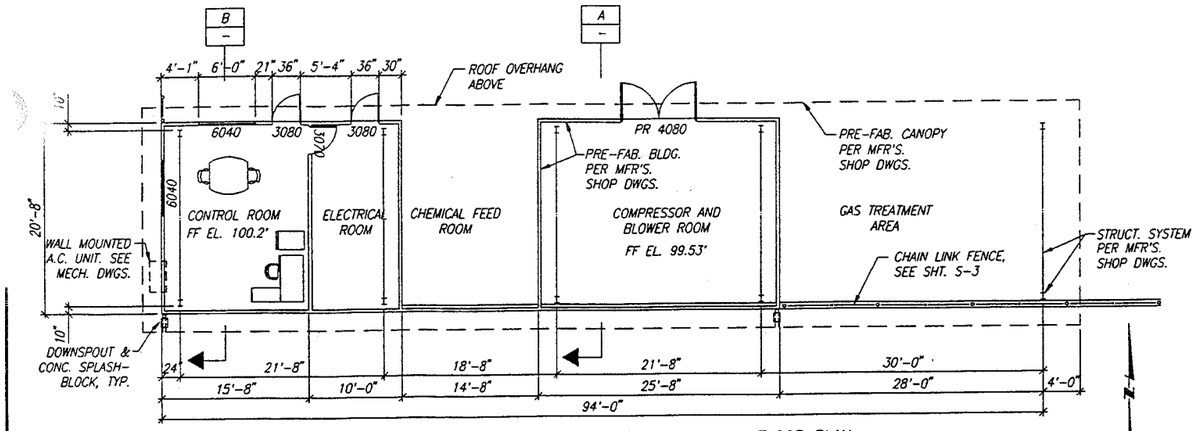

FLOOR PLAN
SCALE: 1/8"=1'-0"

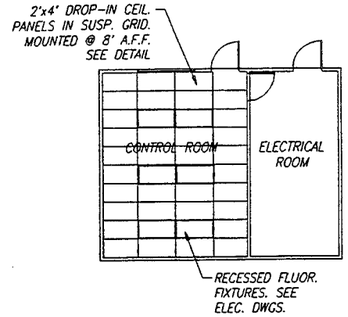

REFLECTED CEILING PLAN
SCALE: 1/8"=1'-0"

NOTES

1. ROOF – BUTLER "BUTLERIB II ROOF SYSTEM". 24 GA. STEEL STANDING SEAM, COATED BOTH SIDES WITH GALVALUME. PROVIDE R-20 MIN. RIGID INSULATION & VAPOR RETARDER. ROOF PANELS SHALL HAVE SLOTTED HOLES FOR THERMAL EXPANSION AND CONTRACTION.
2. WALLS – BUTLER "BUTLERIB II WALL SYSTEM". 24 GA. STEEL, COATED BOTH SIDES WITH GALVALUME.
3. EXTERIOR WALLS – BUTLER "BUTLERIB II WALL SYSTEM". 24 GA. STEEL, GALVANIZED PER ASTM A525 AND PAINTED WITH EXTERIOR COLORS OF "BUTLER-COTE 500FP FINISH SYSTEM". MATCH COLOR OF OTHER BUILDINGS, CONFIRM SELECTION WITH OWNER.

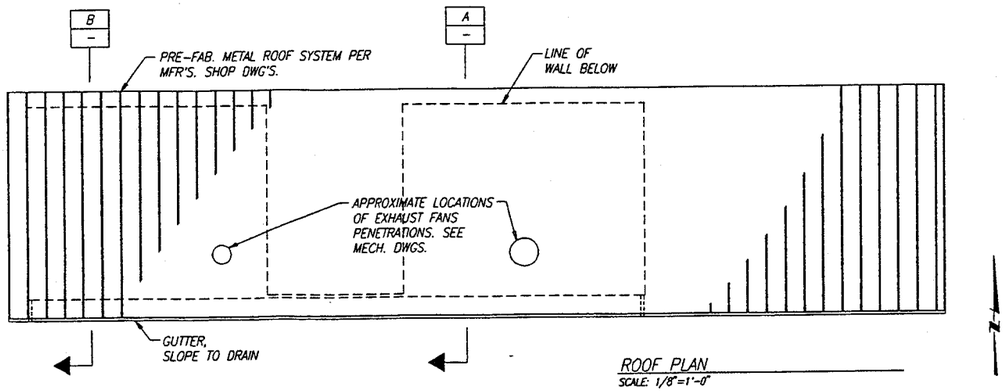

ROOF PLAN
SCALE: 1/8"=1'-0"

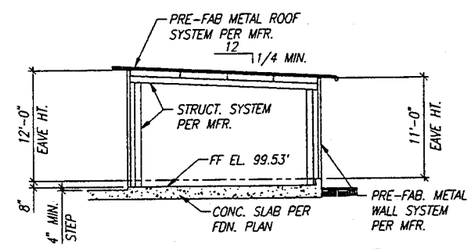

SECTION A
SCALE: 1/8"=1'-0"

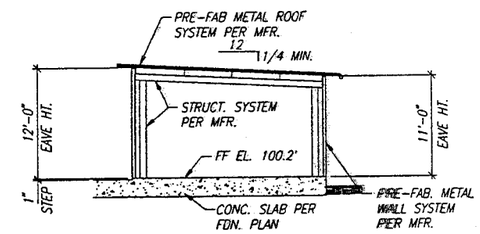

SECTION B
SCALE: 1/8"=1'-0"

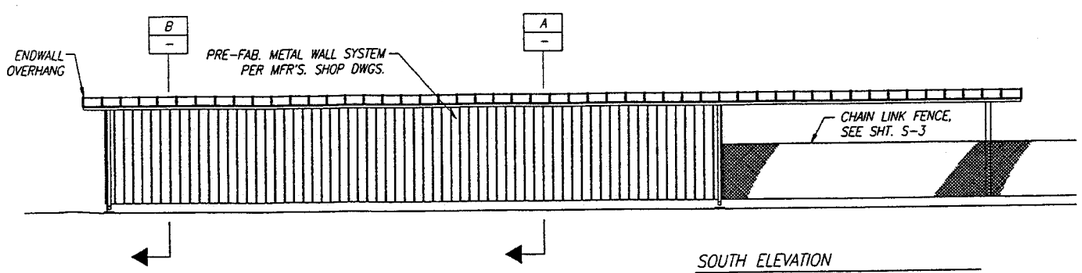

SOUTH ELEVATION
SCALE: 1/8"=1'-0"

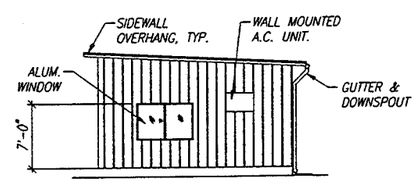

WEST ELEVATION
SCALE: 1/8"=1'-0"

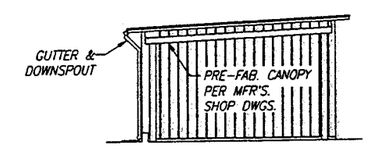

EAST ELEVATION
SCALE: 1/8"=1'-0"

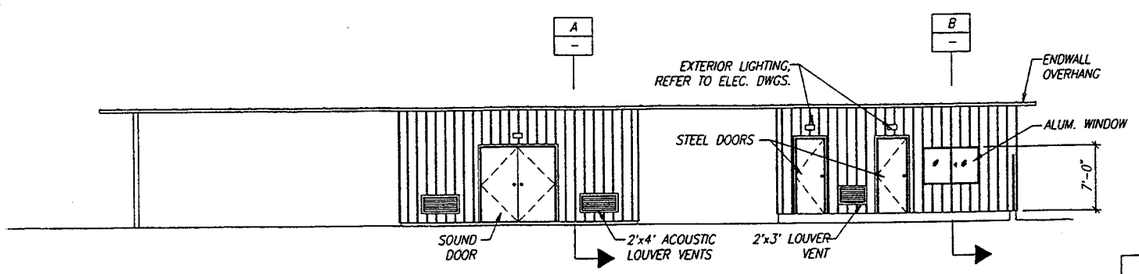

NORTH ELEVATION
SCALE: 1/8"=1'-0"

A-1

R.H.	L.H.	NO REQ	SIZE & DESCRIPTION OF MATERIAL		
DASH NO					
SCALE.	LIMITS ON DIM. UNLESS OTHERWISE NOTED. ANGULAR	FRAC. DEC.	ENGR	SIGNATURE	DATE
			DWN		
FAR NO.		LOCATION	CKD		
			APPVD		
			APPVD		

TITLE SOIL / GROUNDWATER REMEDIAL DESIGN
C-6 TORRANCE FACILITY
FLOOR PLANS, ELEVATIONS, SECTIONS

DOUGLAS AIRCRAFT COMPANY
MCDONNELL DOUGLAS CORPORATION
FACILITIES

SHEET 1 OF 1

MCDONNELL DOUGLAS CORPORATION – THIS INFORMATION IS SUBJECT TO DATA RIGHTS LEGENDS AT THE BEGINNING OF THE DOCUMENT.

BUDLONG & ASSOCIATES, INC.
CONSULTING ENGINEERS
28720 ROADSIDE DRIVE, SUITE 252 AGOURA HILLS, CA 91301
(818) 880-8000 JOB NO. 40101

MONTGOMERY WATSON
Pasadena, California

GENERAL NOTES

GENERAL

THESE NOTES ARE GENERAL AND APPLY TO THE ENTIRE PROJECT EXCEPT WHERE THERE ARE SPECIFIC INDICATIONS OTHERWISE.

THE STRUCTURAL SYSTEMS AND DETAILS OF THESE PLANS ARE THE PRIORITY DESIGN. HOWEVER, ALTERNATIVE SYSTEMS AND DETAILS MAY BE USED IF THE CONTRACTOR SUBMITS PLANS WITH SUBSTANTIATING CALCULATIONS AND TEST DATA THAT ARE ACCEPTED BY THE ENGINEER.

STRUCTURAL DIMENSIONS CONTROLLED BY OR RELATED TO EQUIPMENT SHALL BE VERIFIED BY THE CONTRACTOR WITH MANUFACTURER PRIOR TO CONSTRUCTION. BOLT SIZES, TYPES, AND PATTERNS SHALL BE TEMPLETED TO INSURE ACCURACY OF PLACEMENT.

EQUIPMENT SUPPORTS, ANCHORAGES, OPENINGS, RECESSES, AND REVEALS NOT SHOWN ON THE STRUCTURAL DRAWINGS BUT REQUIRED BY OTHER CONTRACT DOCUMENTS, SHALL BE PROVIDED FOR PRIOR TO PLACING CONCRETE.

STRUCTURAL DRAWINGS SHALL BE USED IN COORDINATION WITH HVAC, MECHANICAL, ELECTRICAL, ARCHITECTURAL, CIVIL DRAWINGS, AND WITH EQUIPMENT MANUFACTURER'S SHOP DRAWINGS.

IF A CONFLICT IS FOUND BETWEEN DIFFERENT PORTIONS OF THE CONTRACT DOCUMENTS, THE CONTRACTOR SHALL NOTIFY THE ENGINEER IMMEDIATELY. CONTINUED CONSTRUCTION OF THE AREA IN CONFLICT SHALL BE AT THE CONTRACTOR'S OWN RISK UNTIL THE CONFLICT IS RESOLVED BY THE ENGINEER.

STRUCTURES HAVE BEEN DESIGNED FOR OPERATIONAL LOADS ON THE COMPLETED STRUCTURE. DURING CONSTRUCTION, THE STRUCTURES SHALL BE PROTECTED BY BRACING AND BALANCING WHEREVER EXCESSIVE CONSTRUCTION LOADS MAY OCCUR. OVERSTRESSING OF ANY STRUCTURAL ELEMENT IS PROHIBITED.

UNLESS OTHERWISE SHOWN ON ALL STRUCTURAL DRAWINGS THE FINISHED GRADE SHALL BE SHOWN THUS: [illegible] ING EITHER GROUND SURFACE OR PAVED SURFACE. FOR DETAILS OF FINISH SURFACES SEE CIVIL AND ARCHITECTURAL DRAWINGS.

WHEREVER ONE MEMBER IS FASTENED TO ANOTHER WITH FASTENINGS (BOLTS, WELDS, ETC.) SET AT A UNIFORM SPACING, THERE SHALL BE A MINIMUM OF 2 FASTENERS PER PIECE AND THE FIRST AND LAST FASTENERS SHALL BE LOCATED NOT TO EXCEED 0.25 SPACE FROM THE END.

THE CONTRACTOR SHALL HAVE THE COMPLETE AND SOLE RESPONSIBILITY FOR THE JOB SITE INCLUDING THE SAFETY OF PERSONS AND PROPERTY. THE ENGINEER'S JOB SITE REVIEW IS TO DETERMINE COMPLIANCE WITH THE PLANS AND SPECIFICATIONS AND DOES NOT INCLUDE A REVIEW OF THE ADEQUACY OF THE CONTRACTOR'S SAFETY MEASURES.

UNDERDRAINS SHALL BE PROVIDED AT STRUCTURES AS DEFINED BY DETAIL S-920.

ALL STRUCTURES WITH UNDERDRAINS SHALL HAVE A UNIFORM LAYER OF GRADED DRAIN ROCK (TYPE H MATERIAL) UNDERNEATH THEM. ALL OTHER STRUCTURES SHALL HAVE A UNIFORM LAYER OF AGGREGATE BASE (TYPE G MATERIAL) UNDERNEATH THEM. THE UNIFORM LAYER SHALL BE A MINIMUM OF 6 INCHES THICKNESS UNLESS NOTED OTHERWISE. THE EQUALIZATION TANKS AND THE WWR CLARIFIER SHALL HAVE AN 18 INCHES THICK LAYER UNDER THE WALL FOOTINGS WHICH SHALL INTERSECT THE 6 INCHES LAYER UNDER THE INTERIOR SLOPING SLABS. THE MATERIALS NOTED ABOVE SHALL BE PROVIDED AS INDICATED, WHETHER SHOWN OR NOT ON DRAWINGS, UNLESS SPECIFICALLY NOTED OTHERWISE.

THE DESIGN WAS IN ACCORDANCE WITH AND THE CONSTRUCTION SHALL COMPLY WITH THE 1991 EDITION OF THE UNIFORM BUILDING CODE, EXCEPT WHERE OTHER APPLICABLE CODES OR THE CONTRACT DOCUMENTS ARE MORE RESTRICTIVE.

LOCATION OF ALL CONSTRUCTION JOINTS SHALL BE AS SHOWN ON THE DRAWINGS OR APPROVED BY THE ENGINEER. ALL CONSTRUCTION JOINTS LOCATED ON THE DRAWINGS OR ADDED AS REQUIRED FOR CONSTRUCTION, SHALL HAVE A 6" FLAT STRIP WATERSTOP IN ALL MEMBERS WHICH ARE IN CONTACT WITH WATER OR ARE BELOW GRADE. SLABS IN CONTACT WITH WATER SHALL HAVE SEALANT GROOVES AS CONSTRUCTION JOINTS.

LIVE LOADS SHALL BE AS FOLLOW:

ROOF	PER 1991 UBC
FLOOR AREAS WITH INDIVIDUAL EQUIPMENT WEIGHING 5 KIPS AND GREATER	250 PSF
WALKWAYS AND STAIRS	100 PSF
PLATFORMS AND ALL OTHER AREAS	150 PSF

IN ADDITION TO THE ABOVE LOADS, SLABS ARE ALSO DESIGNED FOR THE OPERATING LOADS OF EQUIPMENT SHOWN ON THE MECHANICAL DRAWINGS.

METALS

STRUCTURAL STEEL SHALL MEET THE REQUIREMENTS OF ASTM A 36.

ALUMINUM SHALL BE ALLOY 6061-T UNLESS NOTED OTHERWISE.

ALL STAINLESS STEEL SHALL BE TYPE 316.

ALL WELDED SIZES SHALL BE THE MINIMUM REQUIRED BY AWS CODE, EXCEPT THAT THE MINIMUM FILLET WELD SHALL BE 3/16".

FOR STEEL TO STEEL CONNECTIONS, AISC BEARING TYPE STANDARD BOLTED CONNECTION WITH 3/4" DIAMETER BOLTS SHALL BE USED UNLESS NOTED OTHERWISE.

CONCRETE (EXCEPT PRECAST)

ALL STRUCTURAL CONCRETE SHALL DEVELOP A MINIMUM COMPRESSIVE STRENGTH OF 4,000 PSI AT 28 DAYS.

REINFORCING STEEL SHALL CONFORM TO ASTM A 615, GRADE 60.

COLUMN SPIRALS SHALL BE COLD-DRAWN STEEL WIRE PER ASTM A 82.

TOLERANCES IN PLACING REINFORCEMENT SHALL BE:
+/- 3/8 INCH FOR MEMBERS WITH THICKNESS </= 8 INCHES
+/- 1/2 INCH FOR MEMBERS WITH THICKNESS > 8 INCHES

CONCRETE COVER SHALL BE AS FOLLOWS:

FOR CONCRETE PLACED AGAINST EARTH	3"
FOR SURFACES IN CONTACT WITH WATER AND FORMED SURFACES IN CONTACT WITH EARTH	2"
FOR UNDERSIDE OF SLABS OVER WATER, BEAMS, AND COLUMNS NOT IN CONTACT WITH WATER OR EARTH	1-1/2"
FOR ALL OTHER SURFACES	1"

WALLS AND SLABS WITH A SINGLE LAYER OF REINFORCEMENT SHALL HAVE THAT REINFORCEMENT CENTERED, UNLESS NOTED OTHERWISE.

ALL JOINT SURFACES SHALL BE ROUGH AND THOROUGHLY CLEANED.

DOWELS, PIPES, WATERSTOPS, AND OTHER EMBEDDED MATERIALS SHALL BE HELD SECURELY IN POSITION WHILE CONCRETE IS BEING PLACED.

REINFORCING BARS AND ACCESSORIES SHALL NOT BE IN CONTACT WITH ANY PIPE, PIPE FLANGES, METAL CONDUIT, OR OTHER METAL PARTS EMBEDDED IN CONCRETE, A MINIMUM OF 2 INCHES CLEARANCE SHALL BE PROVIDED IN ALL CASES.

ALL ITEMS EMBEDDED IN CONCRETE SHALL BE SPACED ON CENTER AT LEAST 4 TIMES THEIR OUTSIDE DIMENSION, THE OUTSIDE DIMENSION SHALL NOT EXCEED ONE THIRD OF THE MEMBER THICKNESS.

SLABS WITH SLOPING SURFACES SHALL HAVE THE INDICATED SLAB THICKNESS MAINTAINED AS THE MINIMUM. SLAB BOTTOMS CAN EITHER SLOPE WITH THE TOP SURFACE OR BE LEVEL. REINFORCEMENT IN SLABS WITH SLOPING SURFACES SHALL BE PLACED AT THE REQUIRED CLEARANCE FROM THE SLAB SURFACE.

ASIDE FROM NORMAL ACCESSORIES USED TO HOLD REINFORCING BARS FIRMLY IN POSITIONS, THE FOLLOWING SHALL BE ADDED WHERE TWO CURTAINS OF REINFORCING ARE REQUIRED:
A. IN SLABS, #4 RISER OR Z SHAPE SPACER BARS AT 36 INCHES O.C. MAXIMUM EACH WAY TO SUPPORT TOP BARS.
B: IN WALLS, #3 U OR Z SHAPE SPACERS AT 72 INCHES O.C. MAXIMUM EACH WAY

VERTICAL REINFORCEMENT FOR CONCRETE OR MASONRY SHALL BE SPLICED WITH DOWEL BARS OF THE SAME SIZE AND SPACING FROM THE FOUNDATION USING A STANDARD SPLICE LENGTH.

THE FINISH OF ALL EXTERIOR NON-HYDRAULIC CONCRETE VERTICAL SURFACES NOT DEFINED ELSEWHERE SHALL BE AS FOLLOWS:

VERTICAL SURFACES WHICH EXTEND LESS THAN 2'-6" ABOVE FINISHED GRADE SHALL RECEIVE A LIGHT SANDBLAST FINISH ONLY.

VERTICAL SURFACES WHICH EXTEND MORE THAN 2'-6" ABOVE FINISHED GRADE SHALL HAVE A GROOVE AT THE TOP PER DETAILS B/3A-3. WHERE VERTICAL SURFACES EXTEND MORE THAN 6'-0" ABOVE FINISHED GRADE, A SECOND GROOVE PER DETAIL C/3A-3 SHALL BE ADDED AS LOCATED BY THE ENGINEER. WHERE A HORIZONTAL CONSTRUCTION JOINT IS LOCATED NEAR THE LOWER GROOVE, ALIGN ONE EDGE WITH THE JOINT. THE GROOVES SHALL HAVE A SMOOTH FINISH AND THE REMAINING SURFACES SHALL HAVE A LIGHT SANDBLASTED FINISH.

SEALANT SHALL BE PLACED AT THE TOP OF ALL JOINTS RECEIVING EXPANSION JOINT FILLER. SEALANT DEPTH SHALL NOT EXCEED JOINT FILLER THICKNESS.

ALL GROUT SHOWN SHALL BE NON-SHRINK GROUT, UNLESS NOTED OTHERWISE. TWO CLASSES OF NON-SHRINK GROUT ARE USED. SEE THE SPECIFICATIONS FOR AREAS OF APPLICATION.

MASONRY

COMBINED COMPRESSIVE STRENGTH OF THE MASONRY PRISM WALL SHALL BE 1500 PSI AT 28 DAYS AFTER GROUTING.

SPECIAL INSPECTION SHALL BE PROVIDED FOR ALL MASONRY.

GROUT ALL CELLS OF CONCRETE BLOCK MASONRY.

MORTAR SHALL BE TYPE M FOR UBC. GROUT SHALL HAVE MINIMUM COMPRESSIVE STRENGTH AT 28 DAYS OF 2500 PSI.

ALL HORIZONTAL AND VERTICAL REINFORCEMENT SHALL BE CONTINUOUS OVER THE FULL EXTEND OF THE WALL WITH STANDARD SPLICES LOCATED AS NEEDED. WHERE IT IS NECESSARY TO INTERRUPT AND INDIVIDUAL BAR, AN EQUAL SIZED BAR SHALL BE LOCATED AS CLOSE AS POSSIBLE AND SHALL EXTEND A MINIMUM OF ONE SPLICE LENGTH BEYOND EACH SIDE OF THE INTERRUPTION.

STANDARD BAR SPLICES SHALL BE 48 DIAMETERS FOR MASONRY.

SPECIAL INSPECTION

THE FOLLOWING REQUIRED SPECIAL INSPECTION:
CONCRETE AND REINFORCING PLACEMENT
SHOP WELDING (IF NOT DONE IN A UBC 306 (f) APPROVED SHOP)
FIELD WELDING
WELDING OF REBAR SPLICES
WELDING OF METAL DECKING
HIGH STRENGTH BOLTED CONNECTIONS
MASONRY CONSTRUCTION
INSTALLATION OF ADHESIVE ANCHORS AND CAST IN PLACE ANCHOR BOLTS

DETAILS WITH MONTGOMERY WATSON LOGO ON SHEETS S-1 THRU S-6 ARE PART OF MONTGOMERY WATSON STANDARD DETAILS.

THESE DETAILS ARE TO BE USED WHEN REFERRED TO OR WHEN NO OTHER MORE RESTRICTIVE OR DIFFERENT DETAILS ARE SHOWN ON THE DRAWINGS.

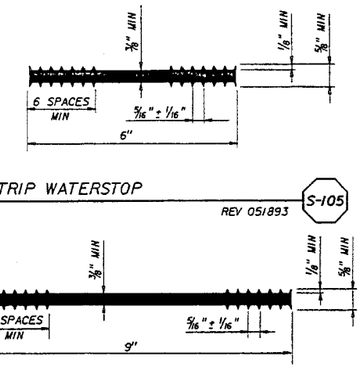

6" FLATSTRIP WATERSTOP — S-105 — REV 051893

9" FLATSTRIP WATERSTOP — S-106 — REV 051893

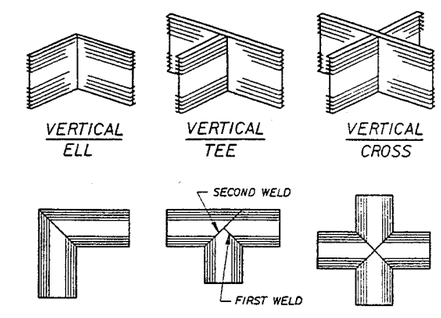

FLATSTRIP WATERSTOPS PREFABRICATED JOINTS — S-108 — REV 061588

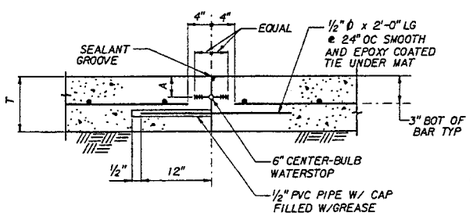

SINGLE MAT REINF - SLEEVE - TYPE JOINT
(TYP CONSTRUCTION JOINT UNLESS OTHERWISE NOTED)
WITH WATERSTOP AND SEALANT GROOVE — S-110 — REV 051893
NO WATERSTOP OR SEALANT GROOVE — S-111 — REV 051893

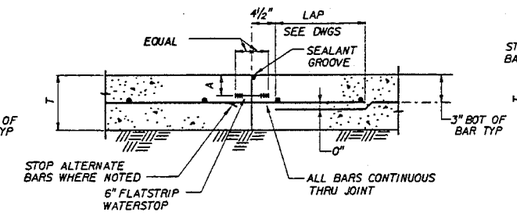

SINGLE MAT REINF - CONTINUOUS THRU JOINT
(ONLY WHEN SPECIFIED ON DRAWINGS)
WITH WATERSTOP AND SEALANT GROOVE — S-112 — REV 051893
NO WATERSTOP OR SEALANT GROOVE — S-113 — REV 051893

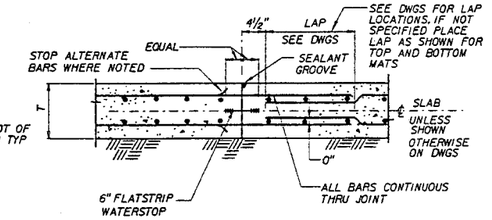

DOUBLE MAT REINF
WITH WATERSTOP AND SEALANT GROOVE — S-114 — REV 051893
NO WATERSTOP OR SEALANT GROOVE — S-115 — REV 051893

T	A
6"	2"
7"	2 1/2"
8"	2 1/2"

NOTES:
1. IN ALL CONSTRUCTION JOINTS WITH WATERSTOPS APPLY 2 COATS OF BOND BREAKER TO FACE OF JOINT. AVOID COATING WATERSTOP (AND SEALANT GROOVE WHERE USED)
2. WATERSTOPS AND SEALANT GROOVES TO BE PROVIDED IN ALL WATER RETAINING SLABS. SEE DWGS. FOR OTHER LOCATIONS WHERE THEY MAY BE REQUIRED
3. STAGGER SPLICES UNLESS NOTED OTHERWISE

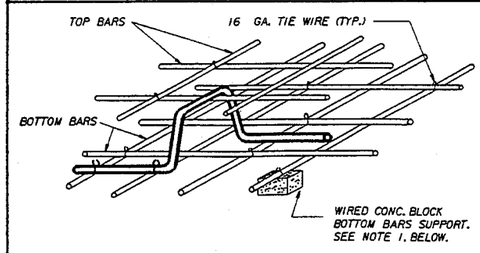

1. METAL BAR SUPPORTS, IF USED IN SLABS NOT ON GROUND, SHALL NOT MAKE CONTACT WITH FORMS.
2. REINFORCING BARS AND ACCESSORIES SHALL NOT BE IN CONTACT WITH ANY OTHER METAL INSTALLATION OR ACCESSORY EMBEDDED IN CONCRETE. A MINIMUM OF 2" CLEARANCE SHALL BE PROVIDED IN ALL CASES.

BAR CHAIR REINFORCEMENT SUPPORT — S-204 — REV 061588

MCDONNELL DOUGLAS CORPORATION - THIS INFORMATION IS SUBJECT TO DATA RIGHTS LEGENDS AT THE BEGINNING OF THE DOCUMENT.

BUDLONG & ASSOCIATES, INC.
CONSULTING ENGINEERS
28720 ROADSIDE DRIVE, SUITE 252 AGOURA HILLS, CA 91301
(818) 880-800 JOB NO. 30504

MONTGOMERY WATSON
Pasadena, California

S-1

R.H. L.H. DASH NO	NO REQ	SIZE & DESCRIPTION OF MATERIAL			
SCALE.	LIMITS ON DIM. UNLESS OTHERWISE NOTED. FRAC. ANGULAR DEC.			SIGNATURE	DATE
			ENGR		
			DWN		
FAR NO. 2921116	LOCATION 47A-1D-1-A1		CKD		
			APPVD		
			APPVD		

TITLE SOIL / GROUNDWATER REMEDIAL DESIGN
C-6 TORRANCE FACILITY
STRUCTURAL NOTES

DOUGLAS AIRCRAFT COMPANY
MCDONNELL DOUGLAS CORPORATION
FACILITIES

CI-701-4-111498
SHEET OF

BOE-C6-0061180

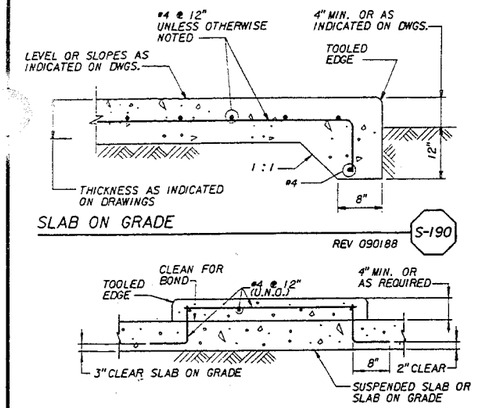

SLAB ON GRADE — S-190 — REV 090188

EQUIPMENT PAD — S-191 — REV 090188

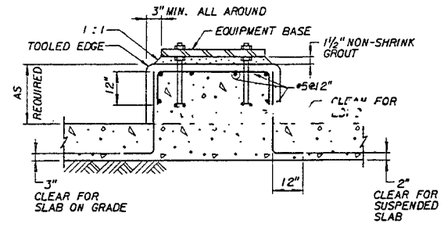

EQUIPMENT BASE — S-192 — REV.061588

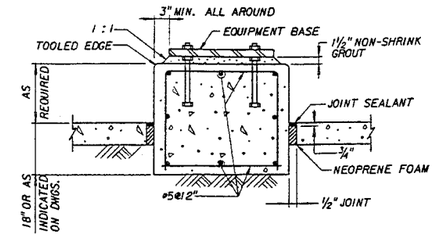

EQUIPMENT BASE ON GRADE WITH SEPARATING JOINT — S-193 — REV 061588

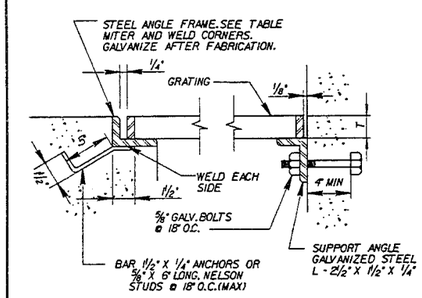

GRATING FRAME TABLE					
TYPE	GRATING DEPTH "T"	FRAME ANGLE	TYPE	GRATING DEPTH "T"	FRAME ANGLE
1	1"	1¼ X 1¼ X ¼	5	2"	2½ X 2½ X ½
2	1¼"	2 X 1½ X ¼	6	2¼"	2½ X 2½ X ¼
3	1½"	1¾ X 1¾ X ¼	7	2½"	3 X 2½ X ½
4	1¾"	2 X 2 X ¼	8		

ALUMINUM GRATING — S-501 — REV.061588

BEARING BARS: DEPTH "T" X 3/16" @ 1 3/16" O.C.
CROSS BARS @ 4" O.C.
USE ALUM. ANGLE SUPPORTS AND S.S. BOLTS

GALVANIZED STEEL GRATING — S-502 — REV.061588

BEARING BARS: DEPTH "T" X 3/16" @ 1 3/16" O.C.
CROSS BARS @ 4" O.C.
PER DETAIL TO LEFT

STAINLESS STEEL GRATING — S-503 — REV.061588

BEARING BARS: DEPTH "T" X 3/16" @ 1 3/16" O.C.
CROSS BARS @ 4" O.C.
USE STAINLESS STEEL ANGLE SUPPORTS AND BOLTS

GRATING OF DEPTH "T" AS NOTED ON DRAWINGS SHALL BE AS SPECIFIED HEREIN.
ALL ENDS AND OPENINGS SHALL BE BANDED.
ALL GRATINGS SHALL BE SECURED IN PLACE WITH REMOVABLE FASTENERS. SEE DETAIL S-517.
WEIGHT OF GRATING SECTION SHALL NOT EXCEED 80 LBS.

PROVIDE EXPANSION JOINTS IN ALL RAILINGS FOR ALL EXPANSION JOINTS IN STRUCTURE

RAILING NOTES

1. WHERE PIPE RAILING IS TO BE INSTALLED PROVIDE EXPANSION JOINTS FOR ¼" MIN. EXPANSION PER 100 LINEAR FEET OF RAILING.
2. STOP RAILING AT SLIDE GATE FRAMES AND SLUICE GATE OPERATORS. PROVIDE STAINLESS STEEL CHAINS W/HOOKS ACROSS OPENINGS.

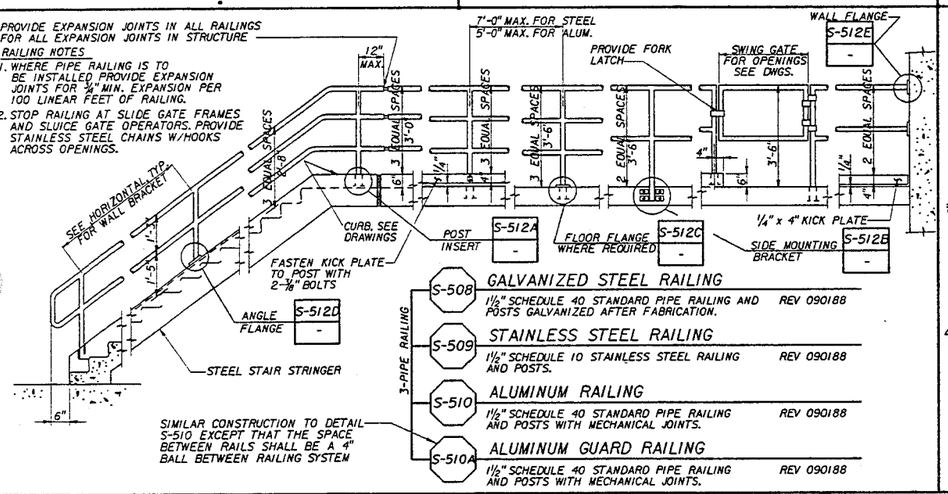

3-PIPE RAILING

- S-508 — GALVANIZED STEEL RAILING — 1½" SCHEDULE 40 STANDARD PIPE RAILING AND POSTS GALVANIZED AFTER FABRICATION. — REV 090188
- S-509 — STAINLESS STEEL RAILING — 1½" SCHEDULE 10 STAINLESS STEEL RAILING AND POSTS. — REV 090188
- S-510 — ALUMINUM RAILING — 1½" SCHEDULE 40 STANDARD PIPE RAILING AND POSTS WITH MECHANICAL JOINTS. — REV 090188
- S-510A — ALUMINUM GUARD RAILING — 1½" SCHEDULE 40 STANDARD PIPE RAILING AND POSTS WITH MECHANICAL JOINTS. — REV 090188

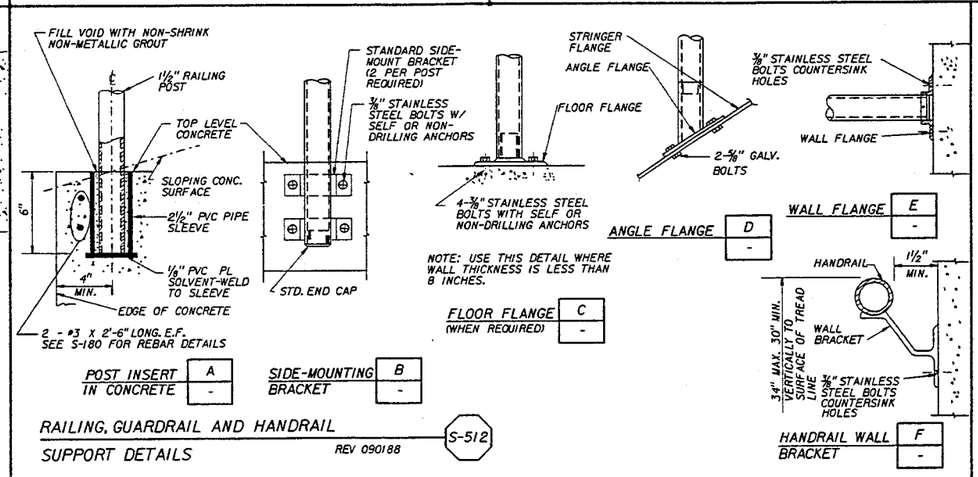

POST INSERT IN CONCRETE — A

SIDE-MOUNTING BRACKET — B

FLOOR FLANGE (WHEN REQUIRED) — C

ANGLE FLANGE — D

WALL FLANGE — E

HANDRAIL WALL BRACKET — F

RAILING, GUARDRAIL AND HANDRAIL SUPPORT DETAILS — S-512 — REV 090188

NOTES:

1. SEE PLANS AND OR SPECS. FOR MATERIALS USED FOR STAIRWAY USE C10X5.28 STRINGERS UNLESS NOTED OTHERWISE
2. STAIR TREADS SHALL BE MADE OF SERRATED ALUM GRATING
3. TREAD MANUFACTURER TO VERIFY HOLE LOCATION FOR BOLTED CONN
4. ALL BOLTS AND CONCRETE ANCHORS SHALL BE STAINLESS STEEL
5. STAIR HANDRAIL NOT SHOWN

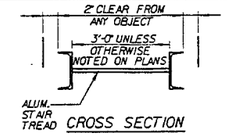

CROSS SECTION

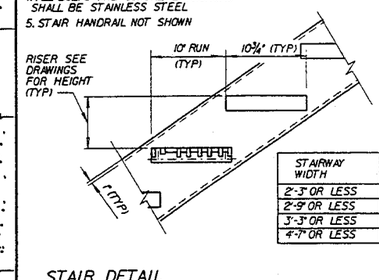

STAIRWAY WIDTH	BEARING BARS ALUMINUM TREAD
2'-3" OR LESS	1¼" X 3/16"
2'-9" OR LESS	1½" X 3/16"
3'-3" OR LESS	1¾" X 3/16"
4'-7" OR LESS	2" X 3/16"

STAIR DETAIL — S-526 — REV 051893

SEE PLANS FOR STAIR WIDTH

NOTE:

1. USE BASE PLATE OF SAME METAL AS STRINGER
2. PROVIDE PROTECTION FOR DISSIMILAR METALS AND CONCRETE AS SPECIFIED
3. STAIR HANDRAIL NOT SHOWN

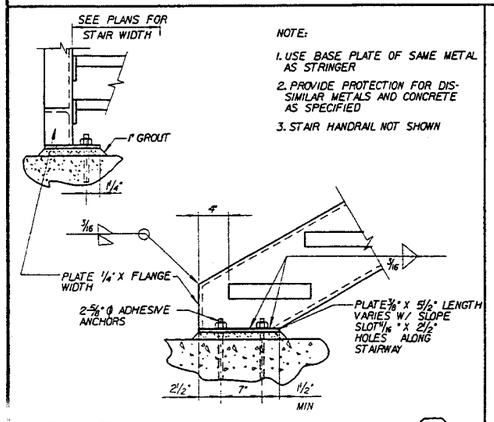

STAIR BOTTOM CONNECTION — S-527 — REV 051893

S-2

R.H.	L.H.	NO REQ	SIZE & DESCRIPTION OF MATERIAL
DASH NO			

SCALE. LIMITS ON DIM. UNLESS OTHERWISE NOTED. ANGULAR FRAC. DEC.

	SIGNATURE	DATE
ENGR		
DWN		
CKD		
APPVD		
APPVD		

FAR NO. 292116 — LOCATION 47A-ID-1-A1

TITLE SOIL / GROUNDWATER REMEDIAL DESIGN
C-6 TORRANCE FACILITY
STRUCTURAL STANDARD DETAILS

DOUGLAS AIRCRAFT COMPANY — MCDONNELL DOUGLAS CORPORATION — FACILITIES

CI-701-4-111498 — SHEET — OF

MCDONNELL DOUGLAS CORPORATION - THIS INFORMATION IS SUBJECT TO DATA RIGHTS LEGENDS AT THE BEGINNING OF THE DOCUMENT.

BUDLONG & ASSOCIATES, INC.
CONSULTING ENGINEERS
28720 ROADSIDE DRIVE, SUITE 252 AGOURA HILLS, CA 91301
(818) 880-800 JOB NO. 30504

MONTGOMERY WATSON
Pasadena, California

BOE-C6-0061181

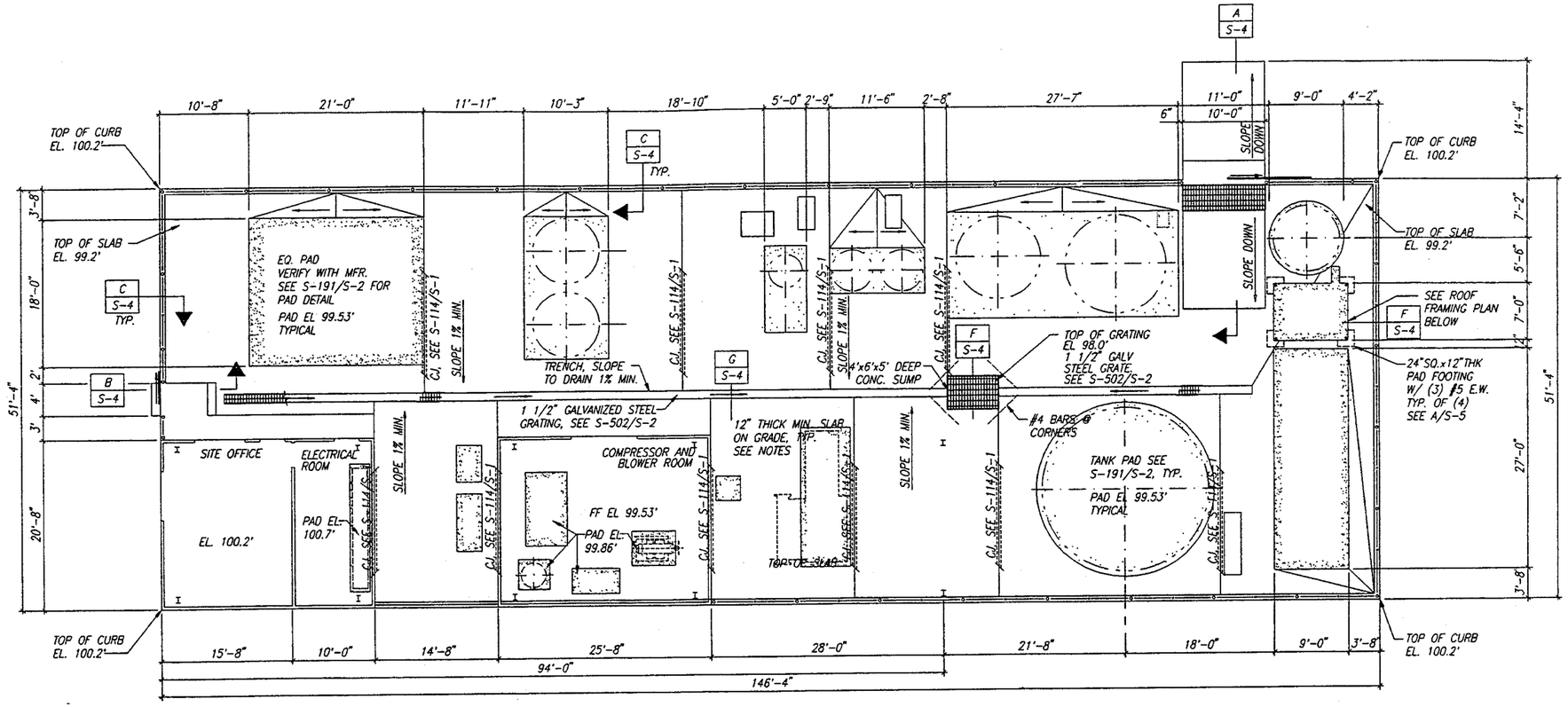

FOUNDATION PLAN

SCALE: 1/8"=1'-0"

CONCRETE NOTES

MATERIALS:

A. REINFORCEMENT: DEFORMED BARS, ASTM A615, GRADE 60.
B. WELDED WIRE FABRIC (WWF) SMOOTH WIRE PER ASTM A185.
C. CONCRETE OTHER THAN FLOOR SLABS: f'c=4,000 PSI.
D. CONCRETE FLOOR SLABS: f'c=4,500 PSI.
E. CONTINUOUS INSPECTION IS REQUIRED FOR ALL CONCRETE DESIGN STRENGTH GREATER THAN f'c=2,500 PSI. THE REQUIRED SPECIAL INSPECTION WILL BE PROVIDED BY A REGISTERED DEPUTY INSPECTOR LICENSED BY THE GOVERNING AGENCY HAVING JURISDICTION OF THE SUBJECT PROJECT TO PERFORM SPECIAL INSPECTIONS.
F. ANCHOR BOLTS: A307 STEEL: PLACEMENT TOLERANCE = 1/8"

INSTALLATION

A. MINIMUM LAP SPLICE:
   1. TOP BARS: 50 BAR DIAMETERS. TOP BARS ARE HORIZONTAL REINFORCEMENT SO PLACED THAT MORE THAN 12" OF FRESH CONCRETE IS CAST IN THE MEMBER BELOW THE REINFORCEMENT.
   2. OTHER BARS: 36 BAR DIAMETERS.
B. CHAMFER: 3/4" EXPOSED CORNERS.
C. FOOTINGS:
   1. ALL FOOTINGS & SLAB SHALL BEAR ON MIN. OF 12" OF COMPACTED SOIL. NOTIFY THE ENGINEER IF SOFT OR UNUSUAL CONDITIONS ARE ENCOUNTERED.
   2. FOOTINGS ARE DESIGNED FOR A MAXIMUM SOIL PRESSURE OF 1,000 PSF.
   3. WATER SHALL NOT BE ALLOWED TO ACCUMULATE IN FOOTING EXCAVATIONS FOR A PROLONGED PERIOD OF TIME. SOILS SOFTENED BY PONDED WATER SHALL BE REMOVED BEFORE CONSTRUCTION OF FOOTINGS.
   4. REINFORCING IN FOOTINGS SHALL BE ACCURATELY PLACED AND SPACED BEFORE PLACING CONCRETE. (DO NOT FLOAT REINFORCING INTO FOOTINGS)
D. SLABS ON GRADE:
   1. ALL CONSTRUCTION EXCAVATIONS UNDER SLABS ON GRADE SHALL BE BACKFILLED WITH APPROVED SOIL WHICH HAS BEEN COMPACTED IN LIFTS NOT EXCEEDING 8" OF LOOSE SOIL IN DEPTH.
   2. SAW CUT CONTROL JOINTS IN CONCRETE SLAB ON GRADE SHALL BE 1/4" MIN. WIDE AND 1/4 OF THE SLAB THICKNESS IN DEPTH. CUTTING OPERATIONS SHALL BE FROM 4 TO 12 HOURS AFTER PLACING CONCRETE. LATE ENOUGH TO PREVENT RAVELING OF THE CUT EDGES AND EARLY ENOUGH TO PREVENT CRACKING OF THE SLAB AHEAD OF THE SAW BLADE. WHEN THE AIR TEMPERATURE IS LESS THAN 50 DEGREES F. SAWCUT 12 HOURS AFTER PLACING CONCRETE MAXIMUM SPACING OF JOINTS SHALL BE 15'-0", UNLESS SHOWN OTHERWISE ON DRAWINGS.

NOTES:

1. VERIFY SIZE AND LOCATIONS OF EQUIPMENT PADS IN THE FIELD AND WITH EQUIP. MANUFACTURER.
2. CHAIN LINK FENCE – FENCE LINE POSTS AND TOP AND BOTTOM RAILS SHALL BE 2 1/2" OD GALV. STEEL PIPES WITH MIN. WEIGHT OF 2.27 lbs. PER FT. FENCE LINE POSTS @ 8'-0" o.c. GATE POSTS SHALL BE GALV. 3" OD WITH MIN. WEIGHT OF 5.79 lbs. PER FT. PROVIDE CANTILEVERED SLIDING GATE WHERE SHOWN ON PLAN.

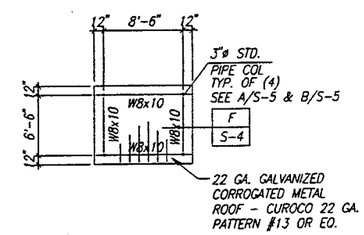

FILTER PRESS CANOPY

SCALE: 1/8"=1'-0"

S-3

R.H. L.H. DASH NO	NO REQ	SIZE & DESCRIPTION OF MATERIAL		
SCALE.	LIMITS ON DIM. UNLESS OTHERWISE NOTED. ANGULAR	FRAC. DEC.	SIGNATURE	DATE
FAR NO.	LOCATION		ENGR. DWN. CKD. APPV'D APPV'D	

TITLE SOIL / GROUNDWATER REMEDIAL DESIGN
C-6 TORRANCE FACILITY
FOUNDATION PLAN

DOUGLAS AIRCRAFT COMPANY
MCDONNELL DOUGLAS CORPORATION
FACILITIES

SHEET 3 OF 4

MCDONNELL DOUGLAS CORPORATION – THIS INFORMATION IS SUBJECT TO DATA RIGHTS LEGENDS AT THE BEGINNING OF THE DOCUMENT.

BUDLONG & ASSOCIATES, INC.
CONSULTING ENGINEERS
28720 ROADSIDE DRIVE, SUITE 252 AGOURA HILLS, CA 91301
(818) 880-8000 JOB NO. 40101

MONTGOMERY WATSON
Pasadena, California

JT FILE NO.
BOE-C6-0061182

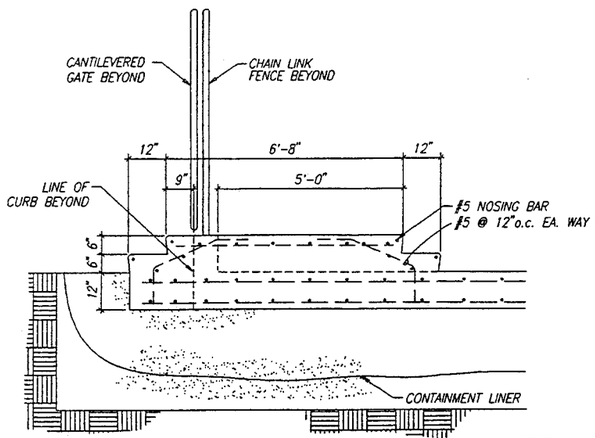

STEPS SECTION
SCALE: 1/2"=1'-0"
B / S-3

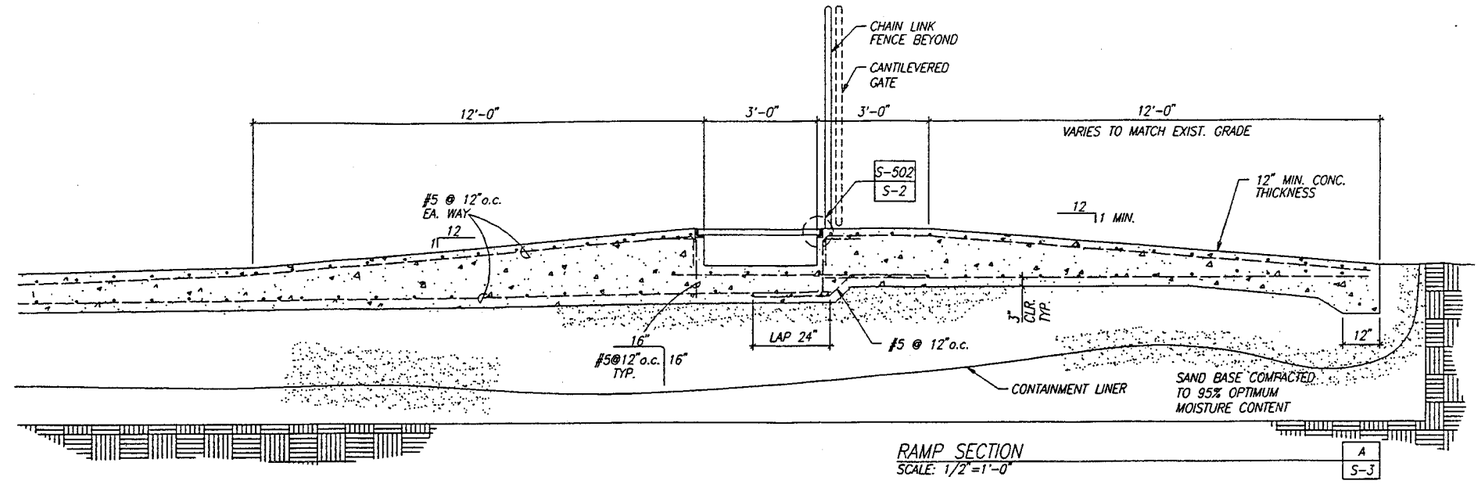

RAMP SECTION
SCALE: 1/2"=1'-0"
A / S-3

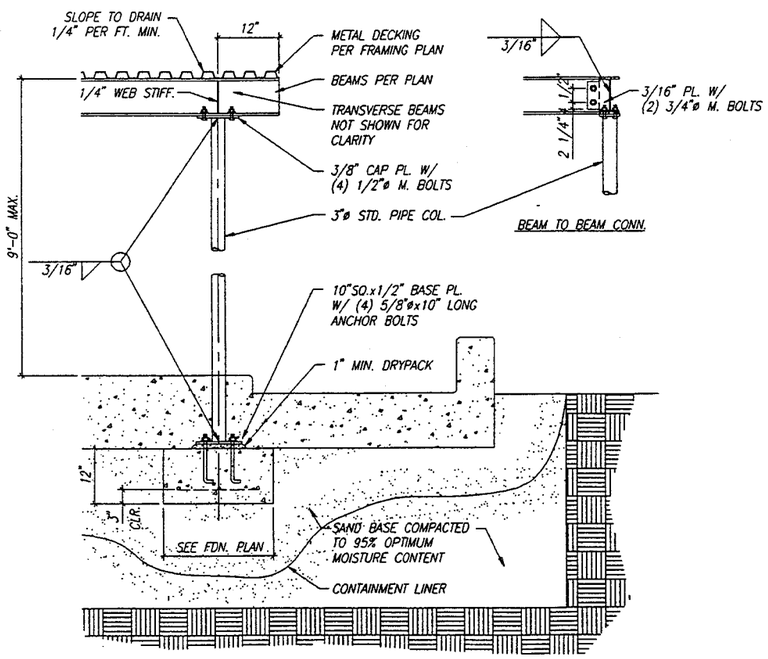

TYPICAL CANOPY SECTION
SCALE: 3/4"=1'-0"
F / S-3

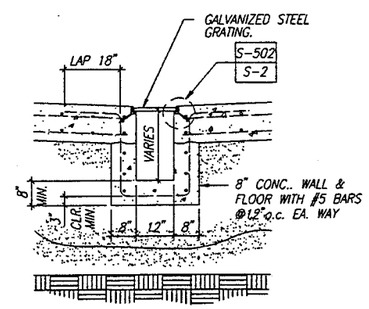

TRENCH DRAIN SECTION
SCALE: 1/2"=1'-0"
E / S-3

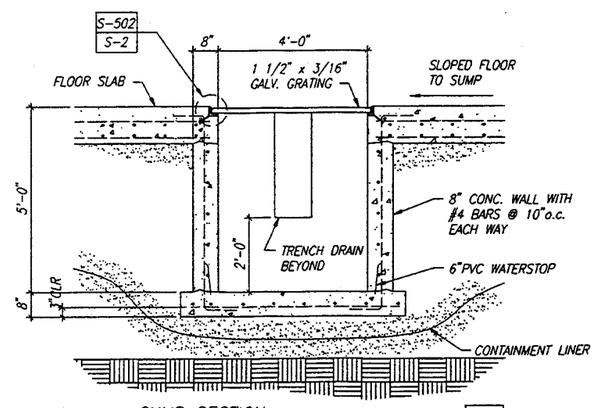

SUMP SECTION
SCALE: 1/2"=1'-0"
D / S-3

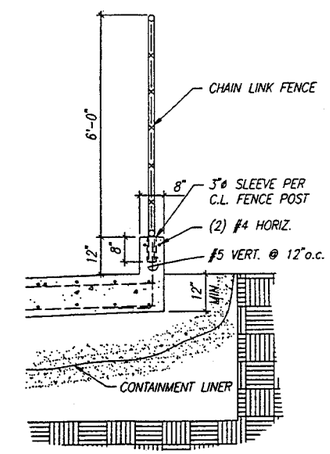

TYPICAL EDGE OF SLAB SECTION
SCALE: 1/2"=1'-0"
C / S-3

NOTE FOR ALL SLAB DETAILS:
CONTAINMENT LINER SHALL BE HYTREL POLYESTER ELASTOMER BY DUPONT OR APPROVED EQUAL. INSTALLED PER MFR'S. INSTRUCTIONS.

S-4

R.H. L.H. DASH NO	NO REQ	SIZE & DESCRIPTION OF MATERIAL			
SCALE.	LIMITS ON DIM. UNLESS OTHERWISE NOTED. ANGULAR	FRAC. DEC.		SIGNATURE	DATE
			ENGR		
			DWN		
FAR NO.		LOCATION	CKD		
			APPVD		
			APPVD		

TITLE SOIL / GROUNDWATER REMEDIAL DESIGN
C-6 TORRANCE FACILITY
STRUCTURAL DETAILS

DOUGLAS AIRCRAFT COMPANY
MCDONNELL DOUGLAS CORPORATION
FACILITIES

SHEET 4 OF 4

MCDONNELL DOUGLAS CORPORATION – THIS INFORMATION IS SUBJECT TO DATA RIGHTS LEGENDS AT THE BEGINNING OF THE DOCUMENT.

BUDLONG & ASSOCIATES, INC.
CONSULTING ENGINEERS
28720 ROADSIDE DRIVE, SUITE 252 AGOURA HILLS, CA 91301
(818) 880-8000 JOB NO. 40101

MONTGOMERY WATSON
Pasadena, California

BOE-C6-0061183

FLUID ABBREVIATION	FUNCTION THIS LIST INCLUDES SOME LINES NOT USED IN THIS PROJECT	PIPING MATERIALS (SEE SCHEDULE AT RIGHT) EXPOSED PIPING (SEE NOTE 14) 2 IN. DIA. AND SMALLER	EXPOSED PIPING 2-1/2 IN. DIA. AND LARGER	BURIED PIPING (SEE NOTE 13) 2 IN. DIA. AND SMALLER	BURIED PIPING 2-1/2 IN. DIA. AND LARGER	FIELD TEST REQUIREMENTS (SEE NOTE 3 AND NOTE 4) MINIMUM TEST PRESSURE PSI	TEST MEDIUM	LEAKAGE ALLOWANCE (SEE NOTE 2)
	CHEMICAL DRAIN AND VENT	13,17,23	13,17,23	13,17,23	13,17,23	NOTE 7	–	–
	CAUSTIC SODA	6	6	6	6	125	WATER	(A)
EW	EXTRACTED GROUNDWATER	14,16,31,32	14,16,31,32	14,16,31,32	14,16,31,32	125	WATER	(A)
EV	EXTRACTED VAPOR	14,16	14,16	14,16	14,16	125	AIR	(A)(E)
FA	FOUL AIR	–	14,18	–	14,18	10	AIR	(A)(D)
IW	IN-PROCESS WATER	16	16	16	16	125	WATER	(A)
N	NITROGEN	7	7	7	7	300	AIR	(A)(D)
OF	OVERFLOW	–	8	–	8	25	WATER	(A)
PA	PLANT AIR	7	7	7	7	300	AIR	(A)(D)
PD	PLANT DRAIN	16	16	16	16	NOTE 6	WATER	
PP	POTASSIUM PERMANGANATE	16	16	16	16	125	WATER	(A)
PW	POTABLE WATER	2,24	2	2,24	2,11,19	125	WATER	2,11,24(A)19(B)
RP	RECOVERED PRODUCT	14	14	14	14	125	WATER	(A)
SA	SAMPLE LINE (SEE LIST AT RIGHT)	16,18,24	–	16,18,24	–	125	WATER	(A)
SC	SPARE CHEMICAL	16	16	16	16	125	WATER	(A)
SD	SANITARY DRAIN AND VENT	4,12	12	12	12,21	NOTE 7	–	–
SDR	STORM DRAIN	–	8	–	22,28	NOTE 6	WATER	8(A) 28(B) 22(C)
SH	SODIUM HYPOCHLORITE	16	16	16	16	125	WATER	(A)
SL	SLUDGE	16	16	16	16	125	WATER	(A)
SOA	SULFURIC ACID	25	25	–	–	125	AIR	(A)(D)
SPD	SUMP PUMP DISCHARGE	2	26	2	26	50	WATER	(A)
TS	THICKENER SUBNATANT	–	26	–	26	50	WATER	(A)
TSL	THICKENED SLUDGE	–	30	–	30	50	WATER	(A)
TSO	THICKENER SUBNATANT OVERFLOW	–	26	–	26	50	WATER	(A)
	TANK DRAIN	16	16	16	16	125	WATER	(A)
	TREATED WATER	16	16	16	16	125	WATER	(A)
	TANK VENT	16	16	16	16	125	WATER	(A)
UW	UTILITY WATER (NON-POTABLE WATER)	2,24	2,11	2,24	2,11,19	125	WATER	2,11,24(A)19(B)
V	VENT	2,15	2,15	2,15	2,15			(A)(E)
WW	FILTER WASTE WASHWATER	–	16	–	16	NOTE 6	WATER	(A)

(* SEE NOTE 5)

PIPING MATERIAL SCHEDULE (SEE NOTE 4)

GROUP NO.	PIPE (SEE NOTE 13)	FITTINGS	VALVES, 6 INCHES AND SMALLER (SEE NOTE 1, NOTE 11 AND NOTE 16)
1	STEEL, ASTM A53, SCHEDULE 40, BLACK WELDED.	2-1/2 INCH AND SMALLER, MALLEABLE IRON, ANSI B16.3, THREADED, BANDED. BLACK, 150 PSI OR STEEL ANSI B16.9, BUTT-WELDED. 3 INCH AND LARGER, CAST IRON, ANSI B16.1, 125 PSI FLANGED OR MECHANICAL COUPLINGS.	BRONZE, THREADED, GATE, CRANE NO. 428 UB OR STOCKHAM B-105. GLOBE, CRANE NO. 14-1/2P OR STOCKHAM B-29. CHECK, CRANE NO. 37 OR STOCKHAM B-319. STEEL, LUBRICATED PLUG, ROCKWELL FIG. 142 OR 143 OR POWELL FIG 2200 OR 2201. ECCENTRIC PLUG. DEZURIK SERIES 118 OR KEYSTONE 1512. BALL, JENKINS NO. 900T OR JAMESBURY FIG. 351
2	STEEL, ASTM A53, SCHEDULE 40 WELDED, GALVANIZED.	2-1/2 INCH AND SMALLER, MALLEABLE IRON, ANSI B16.3, THREADED, BANDED, GALVANIZED 150 PSI. 3 INCH AND LARGER, CAST IRON, ANSI B16.1, 125 PSI FLANGED OR MECHANICAL COUPLINGS.	2-1/2 INCH AND SMALLER, ECCENTRIC PLUG, SYNTHETIC RUBBER FACED, DEZURIK 118S OR HOMESTEAD 1512. BALL, JENKINS NO. 900T OR JAMESBURY FIG. 351 3 INCH AND LARGER, ECCENTRIC PLUG, SYNTHETIC RUBBER FACED, DEZURIK 118F OR KEYSTONE 1522 OR 1532 EWG. GATE, AWWA C500, BUTTERFLY, AWWA, FLANGED.
3	STEEL, ASTM A106 OR A53, SCHEDULE 80, SEAMLESS, BLACK.	FORGED STEEL, ANSI B16.11, SOCKET WELDED OR THREADED, BLACK. 2000 PSI, OR STEEL, ANSI B16.9, BUTT-WELDED, SCHEDULE 80.	CAST IRON, LUBRICATED PLUG, ROCKWELL FIG. 214 OR 305 OR POWELL FIG. 2210 OR 2211.
4	SAME AS GROUP NO. 1	CAST IRON, ANSI B16.12, THREADED, DRAINAGE PATTERN.	——
5	WELDED STEEL, AWWA C200, UNLINED.	WELDED STEEL, FABRICATED, AWWA C200, UNLINED.	AS INDICATED ON DRAWINGS
6	STEEL, ASTM A106, OR A53, SCHEDULE 40, SEAMLESS, BLACK.	STEEL, ANSI B16.9, BUTT-WELDED. CAST IRON, ANSI B16.1, 125 PSI, FLANGED. FORGED STEEL, SOCKET WELDED, ANSI B16.11, 2000 PSI OR STEEL, ANSI B16.5, 150 PSI FLANGED.	CAST IRON, FLANGED, LUBRICATED PLUG ROCKWELL FIG 143 OR POWELL FIG 2201.
7	SAME AS GROUP NO. 2.	MALLEABLE IRON, ANSI B16.3, THREADED, BANDED, GALVANIZED, 300 PSI.	BRONZE THREADED, GLOBE, CRANE NO. 212P OR 229C OR STOCKHAM B-62 OR B-32. BALL, JENKINS NO. 900T OR JAMESBURY FIG. 351 CHECK, CRANE NO. 27 OR STOCKHAM B-322.
8	WELDED STEEL, AWWA C200.	WELDED STEEL, AWWA C200, FABRICATED.	AS INDICATED ON DRAWINGS.
9	SAME AS GROUP NO. 1.	2-1/2 INCH AND SMALLER, MALLEABLE IRON, ANSI B16.3, THREADED, BANDED. BLACK, 150 PSI. 3 INCH AND LARGER, STEEL ANSI B16.9, BUTT-WELDED	ECCENTRIC PLUG, DEZURIK SERIES 118 OR KEYSTONE 1512. CHECK, CRANE NO. 336E OR WALWORTH NO. 904 OR POWELL FIG 668Y. BALL, JENKINS NO. 900T OR JAMESBURY FIG. 351.
10	SAME AS GROUP NO. 3.	1-1/4 INCH AND SMALLER, FORGED STEEL, ANSI B16.11, THREADED OR SOCKET WELDED, BLACK, 3000 PSI, WITH FLANGED AMMONIA UNIONS. 1-1/2 INCH AND LARGER, STEEL, ANSI B16.9, BUTT-WELDED OR FLANGED, SCHEDULE 80	SEMI-PLUG AND YOKE TYPE OR BALL FOR CHLORINE SERVICE, FORGED CARBON STEEL
11	DUCTILE IRON, ANSI A21.51, (AWWA C151) OR CAST IRON ANSI A21.6, 150 PSI, BELL AND SPIGOT, MECHANICAL JOINTS, MECHANICAL COUPLINGS, OR 125 PSI FLANGED (TYPICAL SERVICE - WATER LINES)	DUCTILE IRON OR CAST IRON, ANSI A21.10, OR AWWA C110, BELL AND SPIGOT, MECHANICAL COUPLINGS, FLANGED OR MECHANICAL JOINTS. 250 PSI, (PRESSURE RATING) 12 INCHES AND SMALLER, 150 PSI, (PRESSURE RATING) 14 INCHES AND LARGER, WITH 125 PSI ANSI B16.1 FLANGES.	GATE, AWWA C500, 'O' RING SEALS, MECHANICAL JOINTS ENDS. MUELLER A-2380-20, OR EDDY-IOWA (CLOW) F-5155. BUTTERFLY, AWWA, ECCENTRIC PLUG, DEZURIK SERIES 118 OR KEYSTONE 1512, OR BALL, PRATT OR W-K-M.
12	CAST IRON SOIL, ANSI/ASTM A-74, SERVICE WEIGHT, BELL AND SPIGOT OR HUBLESS. AT THE OPTION OF THE CONTRACTOR, DUCTILE IRON (GROUP NO. 11) MAY BE SUBSTITUTED	CAST IRON SOIL, ANSI/ASTM A-74, SERVICE WEIGHT, BELL AND SPIGOT OR HUBLESS. AT THE OPTION OF THE CONTRACTOR, DUCTILE IRON (GROUP NO. 11) MAY BE SUBSTITUTED.	AS INDICATED ON DRAWINGS.
13	CORROSION RESISTANT (HIGH SILICON CONTENT) CAST IRON, SERVICE WEIGHT, BELL AND SPIGOT OR HUBLESS.	CORROSION RESISTANT (HIGH SILICON CONTENT) CAST IRON, SERVICE WEIGHT, BELL AND SPIGOT OR HUBLESS.	——
14	STAINLESS STEEL, TYPE 316, ASTM A312, SCHEDULE 40S.	STAINLESS STEEL, TYPE 316 ANSI B16.3, SCREWED, 150 PSI, ANSI B16.9, BUTT-WELDED, SCHEDULE 40S, OR 150 PSI FLANGED.	STAINLESS STEEL, BALL, FLANGED, LADISH NO. 4202, OR JAMESBURY TYPE A/D150F. CHECK, LADISH, NO. 5272 OR STOCKHAM FIG. 15 SF 316 OR AS SHOWN ON DRAWINGS.
15	STAINLESS STEEL, TYPE 316, ASTM A312, SCHEDULE 10S.	STAINLESS STEEL, TYPE 316 ANSI B16.9 BUTT-WELDED SCHEDULE 10S OR 150 PSI FLANGED.	STAINLESS STEEL, AS INDICATED ON DRAWINGS.
16	POLYVINYL CHLORIDE, SCHEDULE 80, NORMAL IMPACT, ASTM D1785	POLYVINYL CHLORIDE, SCHEDULE 80, NORMAL IMPACT, SOCKET SOLVENT WELD JOINTS, ASTM D2467.	POLYVINYL CHLORIDE, BALL, DIAPHRAGM, BUTTERFLY, BALL OR LIFT CHECK, CHEMTROL, HILLS-MCCANNA OR GSR-RG, SLOAN CO.
17	POLYPROPYLENE, ASTM D2146, SCHEDULE 40, WITH HEAT FUSED JOINTS.	POLYPROPYLENE, SCHEDULE 40, DRAINAGE TYPE WITH HEAT FUSED SOCKET JOINTS.	——
18	FIBERGLASS REINFORCED PLASTIC, ASTM D2996, FILAMENT-WOUND, SOCKET AND SPIGOT ENDS, ADHESIVE BONDED.	FIBERGLASS REINFORCED PLASTIC, FILAMENT-WOUND, SOCKET ENDS. ADHESIVE BONDED, OR FIBERGLASS FLANGED.	PLASTIC LINED, FLANGED, FLANGES TO MATCH 150 PSI ANSI B16.5 DIMENSIONS, OR AS INDICATED ON DRAWINGS.
19	POLYVINYL CHLORIDE PRESSURE PIPE ASTM D2241 WITH BELL AND SPIGOT JOINTS.	CAST IRON, 150 PSI, FOR POLYVINYL CHLORIDE PIPE, AWWA C110 CEMENT MORTAR LINED, AWWA C104.	SAME AS GROUP NO. 11.
20	VITRIFIED CLAY, PERFORATED, ASTM C 700, EXTRA STRENGTH, FLEXIBLE COMPRESSION JOINTS FOR BELL AND SPIGOT PIPE OR PLAIN END WITH MECHANICAL COMPRESSION JOINTS	VITRIFIED CLAY, ASTM C700, FLEXIBLE JOINTS FOR BELL AND SPIGOT PIPE OR PLAIN END WITH MECHANICAL COMPRESSION JOINTS.	——
21	VITRIFIED CLAY, ASTM C700, EXTRA STRENGTH, FLEXIBLE COMPRESSION JOINTS FOR BELL AND SPIGOT PIPE OR PLAIN END WITH MECHANICAL COMPRESSION JOINTS	VITRIFIED CLAY, ASTM C700, FLEXIBLE JOINTS FOR BELL AND SPIGOT PIPE OR PLAIN END WITH MECHANICAL COMPRESSION JOINTS.	——
22	REINFORCED CONCRETE, ASTM C76, TONGUE AND GROOVED JOINTS. (TYPICAL SERVICE-CULVERTS)	SAME AS GROUP NO. 8	——
23	TEMPERED GLASS. (ARMORED, WHERE BURIED). ANSI/ASTM C599	TEMPERED GLASS DRAINAGE TYPE WITH COMPRESSION COUPLINGS AND TEFLON JOINTS. ANSI/ASTM C599 (ARMORED WHERE BURIED)	——
24	COPPER, ASTM B88, TYPE K, SOFT TEMPERED WHERE BURIED, HARD TEMPERED WHERE EXPOSED.	WROUGHT COPPER OR CAST BRONZE, ANSI B16.22, SOLDER JOINT, 150 PSI, OR COMPRESSION FITTINGS. (FOR OXYGEN PIPING USE SILVER SOLDER. FOR COMPRESSED AIR PIPING USE 95-5 TIN-ANTIMONY SOLDER).	BRONZE, SOLDER JOINT, GLOBE, CRANE NO. 1310 OR STOCKHAM B-14. CHECK, CRANE NO. 1342 OR 36, OR STOCKHAM B-309 OR B-345. GATE, CRANE NO. 1320 OR 426, OR STOCKHAM B-104 OR B-105.
25	STEEL, ASTM A106 OR A53, SCHEDULE 40, SEAMLESS, BLACK, SARAN OR POLYPROPYLENE-LINED	STEEL, ANSI B16.5, 150 PSI FLANGED, SARAN OR POLYPROPYLENE-LINED.	CAST STEEL PLUG, DIAPHRAGM OR CHECK, 150 PSI FLANGED, SARAN OR POLYPROPYLENE-LINED.
26	SAME AS GROUP NO. 11 (TYPICAL SERVICE - SLUDGE AND SEWAGE LINES)	SAME AS GROUP NO. 11.	ECCENTRIC PLUG, SYNTHETIC RUBBER FACED, DEZURIK 118F OR KEYSTONE 1522 SWING TYPE CHECK, CRANE NO. 383 OR POWELL FIG. 559. BALL, PRATT OR W-K-M.
27	POLYVINYL CHLORIDE GRAVITY SEWER PIPE, ASTM D3034, BELL AND SPIGOT.	POLYVINYL CHLORIDE, ANSI/ASTM D3034, BELL AND/OR SPIGOT.	——
28	REINFORCED CONCRETE, AWWA C302, CLASS-SEE DRAWINGS. (TYPICAL SERVICE - PRESSURE PIPELINES)	SAME AS GROUP NO. 8.	AS INDICATED ON DRAWINGS.
29	SAME GROUP NO. 1.	2 INCH AND SMALLER, MALLEABLE IRON, ANSI B16.3, THREADED, BANDED, BLACK, 150 PSI. 2-1/2 INCH AND LARGER, STEEL ANSI B16.9, BUTT-WELDED.	SAME AS GROUP NO. 1, EXCEPT LUBRICATED PLUG SHALL BE ROCKWELL FIG. 114 OR 115, OR POWELL FIG. 2202 OR 2203.
30	SAME AS GROUP NO. 11, GLASS-LINED OR STEEL ASTM A53, SCHEDULE 40, GLASS-LINED	SAME AS GROUP NO. 11, GLASS-LINED OR STEEL, ANSI B16.9, SCHEDULE 40, GROOVED WITH MECHANICAL COUPLINGS, GLASS-LINED.	SAME AS GROUP NO. 26.
31	DOUBLE CONTAINMENT PIPE CARRIER PIPE SAME AS GROUP 14 CONTAINMENT PIPE SAME AS GROUP 16	SAME AS GROUP NO. 14 FOR CARRIER PIPE & SAME AS GROUP NO. 16 FOR CONTAINMENT PIPE	SAME AS GROUP NO. 14 FOR CARRIER PIPE & SAME AS GROUP NO. 16 FOR CONTAINMENT PIPE
32	DOUBLE CONTAINMENT PIPE CARRIER PIPE SAME AS GROUP 16 CONTAINMENT PIPE SAME AS GROUP 16	SAME AS GROUP NO. 16	SAME AS GROUP NO. 16

LIST OF SAMPLE LINES

PIPE DESIGNATION	SAMPLE POINT

TYPICAL PIPE DESIGNATION:

2" UW (24)

PIPE DIAMETER — FLUID ABBREVIATION — MATERIAL GROUP NUMBER (SEE NOTE 12)

NOTES

GENERAL NOTE

ALTHOUGH SEVERAL PIPING MATERIALS ARE SHOWN THAT MAY BE USED FOR A GIVEN FUNCTION, ONLY THE CALLED OUT PIPING MATERIAL SHOWN ON THE CONSTRUCTION DRAWINGS AND SPECIFICATIONS SHALL BE USED. THE CONTRACTOR DOES NOT HAVE THE OPTION TO USE A DIFFERENT MATERIAL.

NOTE 1

PROPRIETARY NAMES HAVE BEEN QUOTED FOR IDENTIFICATION PURPOSES ONLY. SUBSTITUTIONS WILL BE PERMITTED SUBJECT TO PROVISIONS OF THE SPECIFICATIONS.

NOTE 2

LEAKAGE ALLOWANCE IS AS FOLLOWS:
(A) PIPES SO DESIGNATED SHALL SHOW ZERO LEAKAGE.
(B) PIPES SO DESIGNATED SHALL SHOW ZERO LEAKAGE FOR UNBURIED PIPE AND NOT MORE THAN 0.02 GALLON PER HOUR PER INCH DIAMETER PER 100 FEET OF BURIED PIPE.
(C) PIPES SO DESIGNATED SHALL NOT SHOW A LEAKAGE OF MORE THAN 0.15 GALLON PER HOUR PER INCH OF DIAMETER PER 100 FEET OF PIPE.
(D) PIPES SO DESIGNATED SHALL NOT SHOW A LOSS OF PRESSURE OF MORE THAN 5 PERCENT.
(E) PIPES SO DESIGNATED SHALL NOT SHOW A LOSS OF VACUUM OF MORE THAN 4 INCHES MERCURY COLUMN.

NOTE 3

FOR FIELD TEST PROCEDURES AND ADDITIONAL TEST REQUIREMENTS, SEE PIPING SECTION OF SPECIFICATIONS.

NOTE 4

ANY DEVIATION FROM THE PIPING MATERIALS OR FIELD TEST REQUIREMENTS SHOWN WILL BE NOTED IN THE SPECIFICATIONS OR ON THE DRAWINGS.

NOTE 5

PIPING GROUP NUMBER SHOWN THUS * SHALL BE INSULATED. SEE PIPING SECTION OF SPECIFICATIONS FOR INSULATING MATERIALS.

NOTE 6

STATIC WATER TEST WITH SURFACE 5 FEET ABOVE HIGH POINT OF PIPE.

NOTE 7

INSPECTION AND TESTING SHALL BE IN ACCORDANCE WITH APPLICABLE PLUMBING CODE.

NOTE 8

NO APPARENT LEAKS UNDER NORMAL OPERATING CONDITIONS.

NOTE 9

INSPECTION AND TESTING SHALL BE IN ACCORDANCE WITH APPLICABLE NATIONAL FIRE PROTECTION ASSOCIATION STANDARDS.

NOTE 10

PIPING MATERIALS SHALL BE IN ACCORDANCE WITH NATIONAL FIRE PROTECTION ASSOCIATION STANDARDS.

NOTE 11

FOR VALVES 8 INCHES AND LARGER SEE VALVE SCHEDULE. FOR SPECIAL VALVES SEE SPECIFICATIONS.

NOTE 12

CHANGE IN PIPING MATERIAL GROUP NUMBER IS INDICATED THUS: ——→

NOTE 13

FOR PIPE LINING AND COATING, SEE SPECIFICATIONS.

NOTE 14

EXPOSED PIPING SHALL BE PAINTED IN ACCORDANCE WITH SPECIFICATIONS. COLORS TO BE SELECTED BY ENGINEER.

NOTE 15

PIPING MATERIAL SHALL BE NON-ABRASIVE FLEXIBLE RUBBER HOSE AND QUICK CONNECTION COUPLINGS WITH GROUP NO. 1 AT EQUIPMENT.

NOTE 16

VALVES 2-1/2 INCH AND SMALLER MAY HAVE SCREWED ENDS. VALVES 3 INCH AND LARGER SHALL HAVE FLANGED ENDS. UNLESS OTHERWISE SHOWN OR SPECIFIED.

REV. 070193

PP-1

R.H. L.H. DASH NO	NO REQ	SIZE & DESCRIPTION OF MATERIAL		
SCALE. NONE	LIMITS ON DIM. UNLESS OTHERWISE NOTED. ANGULAR	FRAC. DEC.	SIGNATURE	DATE
			ENGR	
			DWN	
			CKD	
FAR NO. 292116	LOCATION 47A-ID-1-A1		APPVD	
			APPVD	

TITLE SOIL / GROUNDWATER REMEDIAL DESIGN
C-6 TORRANCE FACILITY
PIPING SCHEDULE

DOUGLAS AIRCRAFT COMPANY
MCDONNELL DOUGLAS CORPORATION
FACILITIES

CI-701-4-111498
SHEET OF

MCDONNELL DOUGLAS CORPORATION - THIS INFORMATION IS SUBJECT TO DATA RIGHTS LEGENDS AT THE BEGINNING OF THE DOCUMENT.

MONTGOMERY WATSON
Pasadena, California

BOE-C6-0061184

MECHANICAL EQUIPMENT SCHEDULE

[illegible]	DESCRIPTION	SERVICE	SIZE OR CAPACITY	REMARKS
ME-1	BIOREACTORS PACKAGE	GROUNDWATER	150 GPM	
ME-2	FILTER PACKAGE	GROUNDWATER	150 GPM	W/ AIR BLOWER AND ACCESSORIES BY MFTR
ME-3	AIR STRIPPER PACKAGE	GROUNDWATER	150 GPM	
ME-4	AIR BLOWER	AIR	1740 CFM, 5 HP, TEFC 230 OR 460/3/60	PART OF AIR STRIPPER PACKAGE
ME-5	GAC PACKAGE	GROUNDWATER	150 GPM	
ME-6	VACUUM BLOWER	SOIL VAPOR OR VOLATILE ORGANIC COMPOUNDS (VOC)	800 CFM, 8" Hg VACUUM 25 HP, TEFC 230 OR 460/3/60	
ME-7	PADRE PACKAGE	SOIL VAPOR OR VOLATILE ORGANIC COMPOUNDS (VOC)		OFF-GAS TREATMENT W/ HIGH COMP & FAN, LOW COMP & FAN, PUMP & OIL PUMP
ME-8	PADRE PACKAGE	SOIL VAPOR OR VOLATILE ORGANIC COMPOUNDS (VOC)		OFF-GAS TREATMENT W/ HIGH COMP & FAN, LOW COMP & FAN, PUMP & OIL PUMP
ME-9	NITROGEN GENERATOR	NITROGEN GAS	6 CFM @ 145 PSI	
[illegible]-10	FILTER PRESS	SLUDGE	24 LB DRY SOLID, 100 PSI	
ME-11	CHEMICAL CLEANING PACKAGE	ACID / CAUSTIC	5 GPM / SQ.FT	SELF-CONTAINED PACKAGE W/CHEMICAL PUMP, CHEMICAL ADDITION CHAMBER PH CONTROLLER PUMP AND PIPING
ME-12	ROTARY SCREW AIR COMPRESSOR	COMPRESSED AIR	275 CFM @ 150 PSI 75 HP 460/3/60	
ME-13	REFRIGERATED AIR DRYER	COMPRESSED AIR	300 CFM @ 150 PSI 3 HP	

PUMP SCHEDULE

PUMP NO.		SERVICE	TYPE	GPM	TDH FT.	HP (MIN)	REMARKS
P-1	FILTER FEED PUMP	WATER	END SUCTION	150	85	5	
P-2	FILTER FEED PUMP	WATER	END SUCTION	150	85	5	
P-3	GAC FEED PUMP	WATER	END SUCTION	150	60	3	
P-4	GAC FEED PUMP	WATER	END SUCTION	150	60	3	
P-5	BACKWASH FEED PUMP	WATER	END SUCTION	250	50	5	
P-6	BACKWASH FEED PUMP	WATER	END SUCTION	250	50	5	
P-7	SUMP PUMP	WATER	SUBMERSIBLE	50	30	1	
P-8	SUMP PUMP	WATER	SUBMERSIBLE	50	30	1	
P-9	SLUDGE TRANSFER	SLUDGE	AIR DIAPHRAGM	30	30	-	
P-10	SLUDGE TRANSFER	SLUDGE	AIR DIAPHRAGM	30	30	-	
P-11	SLUDGE TRANSFER	SLUDGE	AIR DIAPHRAGM	30	30	-	
P-12	SLUDGE TRANSFER	SLUDGE	AIR DIAPHRAGM	30	30	-	
P-13	SLUDGE TRANSFER	SLUDGE	AIR DIAPHRAGM	20	200	-	
P-14	SLUDGE TRANSFER	SLUDGE	AIR DIAPHRAGM	20	200	-	
P-15	SOLVENT TRANSFER	SOLVENT	AIR DIAPHRAGM	30	30		
WCC * RW *	2 NEW WELL PUMPS AND 12 EXISTING WELL PUMPS SEE WELL PUMP SCHEDULE ON SHEET PP-18	GROUND-WATER	AIR DRIVEN	10	150		

TANK SCHEDULE

TANK NO.	DESCRIPTION		TYPE	CAPACITY (GAL)	MATERIAL	REMARKS
TK-1	EQUALIZATION	PROCESS WATER	CONICAL BOTTOM WITH TANK STAND	15,000	FRP	20' DIA, 12'(H)
TK-2	BACKWASH STORAGE	TREATED WATER	FLAT BOTTOM	5,000	FRP	10' DIA, 9'(H)
TK-3	SLUDGE TRANSFER	SLUDGE	CONICAL BOTTOM WITH TANK STAND	9,000	FRP	12' DIA, 12'(H)
TK-4	SLUDGE STORAGE	SLUDGE	CONICAL BOTTOM WITH TANK STAND	2,200	FRP	8' DIA, 8'(H)
TK-5	CHEMICAL STORAGE	POTASSIUM PERMANGANATE	FLAT BOTTOM	55	POLYETHYLENE	DRUM
TK-6	CHEMICAL MIXING	POTASSIUM PERMANGANATE	FLAT BOTTOM	55	POLYETHYLENE	DRUM
TK-7	CHEMICAL STORAGE	SODIUM HYPOCHLORITE	FLAT BOTTOM	55	POLYETHYLENE	DRUM
TK-8	AIR RECEIVER	COMPRESSED AIR	ASME TYPE	400	STEEL	
TK-9	BAKER TANK	TREATED WATER		15,000	STEEL	8'X35'X8'(H)
TK-10	BAKER TANK	TREATED WATER		15,000	STEEL	8'X35'X8'(H)
TK-11	RECOVERED PRODUCT	SOLVENT	FLAT BOTTOM	1,000	FRP	6' DIA, 6'(H)

METER SCHEDULE

METER NO.	DESCRIPTION	SERVICE	TYPE	SIZE (IN)	FLOW GPM	ENDS	REMARKS
M-1	METER	GROUNDWATER	ROTARY POSITIVE DISPLACEMENT	3	100	FLGD.	
M-2	METER	GROUNDWATER	ROTARY POSITIVE DISPLACEMENT	3	100	FLGD.	
M-3	METER	TREATED WATER	ROTARY POSITIVE DISPLACEMENT	4	250	FLGD.	

CHEMICAL FEEDER SCHEDULE

FAN NO.	SERVICE	TYPE	CAPACITY	PSI	HP (MIN.)	REMARKS
FD-1	POTASSIUM PERMANGANATE	DIAPHRAGM METERING PUMP	0.2 LB / HOUR	75	1/4HP	
FD-2	SODIUM HYPOCHLORITE	DIAPHRAGM METERING PUMP	2.0 LB / HOUR	75	1/4HP	

HVAC SCHEDULE

HVAC NO.	LOCATION	SERVICE	TYPE	CAPACITY	REMARKS
F-1	SITE OFFICE	EXHAUST	CENTRIFUGAL	6000 CFM, 1/4" SP 1 HP	ROOF MOUNTED
F-2	MCC ROOM	EXHAUST	CENTRIFUGAL	1500 CFM, 1/4" SP 1/4 HP	ROOF MOUNTED
AC-1	SITE OFFICE	COOLING	ROOM AIR COND.	1 TON, 240/350 CFM	WALL MOUNTED

PP-2

R.H. L.H. DASH NO	NO REQ	SIZE & DESCRIPTION OF MATERIAL

SCALE. LIMITS ON DIM. UNLESS OTHERWISE NOTED. FRAC. DEC. ANGULAR

	SIGNATURE	DATE
ENGR		
DWN		
CKD		
APPVD		
APPVD		

FAR NO. 292116 LOCATION 47A-1D-1-A1

TITLE SOIL / GROUNDWATER REMEDIAL DESIGN
C-6 TORRANCE FACILITY
EQUIPMENT SCHEDULES

DOUGLAS AIRCRAFT COMPANY
MCDONNELL DOUGLAS CORPORATION
FACILITIES

CI-701-4-111498

SHEET OF

MCDONNELL DOUGLAS CORPORATION - THIS INFORMATION IS SUBJECT TO DATA RIGHTS LEGENDS AT THE BEGINNING OF THE DOCUMENT.

MONTGOMERY WATSON
Pasadena, California

BOE-C6-0061185

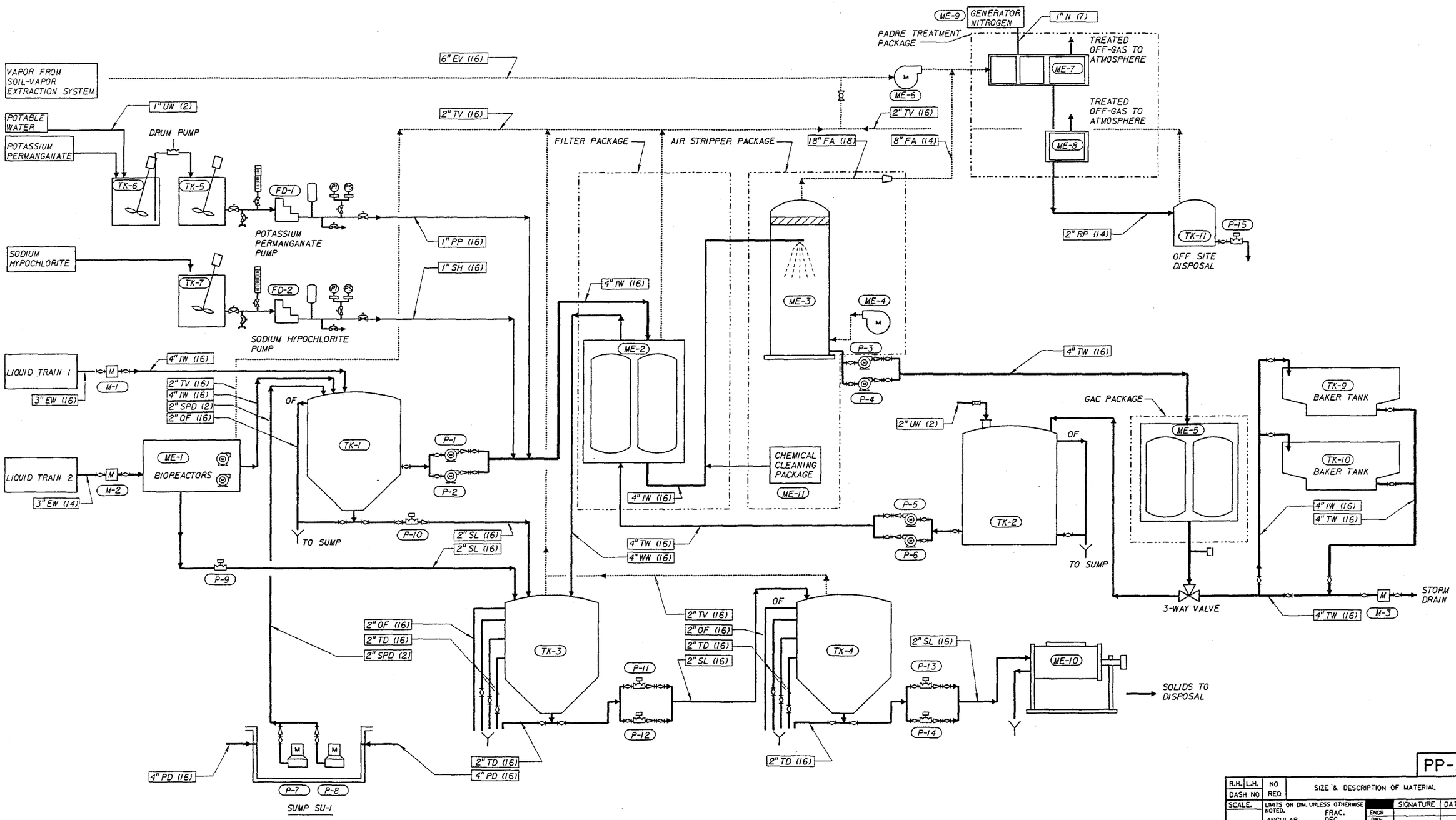

PP-3

R.H.	L.H.	NO REQ	SIZE & DESCRIPTION OF MATERIAL
DASH NO			

SCALE:

LIMITS ON DIM. UNLESS OTHERWISE NOTED. FRAC. DEC. ANGULAR

	SIGNATURE	DATE
ENGR		
DWN		
CKD		
APPVD		
APPVD		

FAR NO. 292116 LOCATION 47A-ID-1-A1

TITLE SOIL / GROUNDWATER REMEDIAL DESIGN
C-6 TORRANCE FACILITY
PROCESS FLOW DIAGRAM

DOUGLAS AIRCRAFT COMPANY
MCDONNELL DOUGLAS CORPORATION
FACILITIES

CI-701-4-111498

SHEET OF

MCDONNELL DOUGLAS CORPORATION - THIS INFORMATION IS SUBJECT TO DATA RIGHTS LEGENDS AT THE BEGINNING OF THE DOCUMENT.

MONTGOMERY WATSON
Pasadena, California

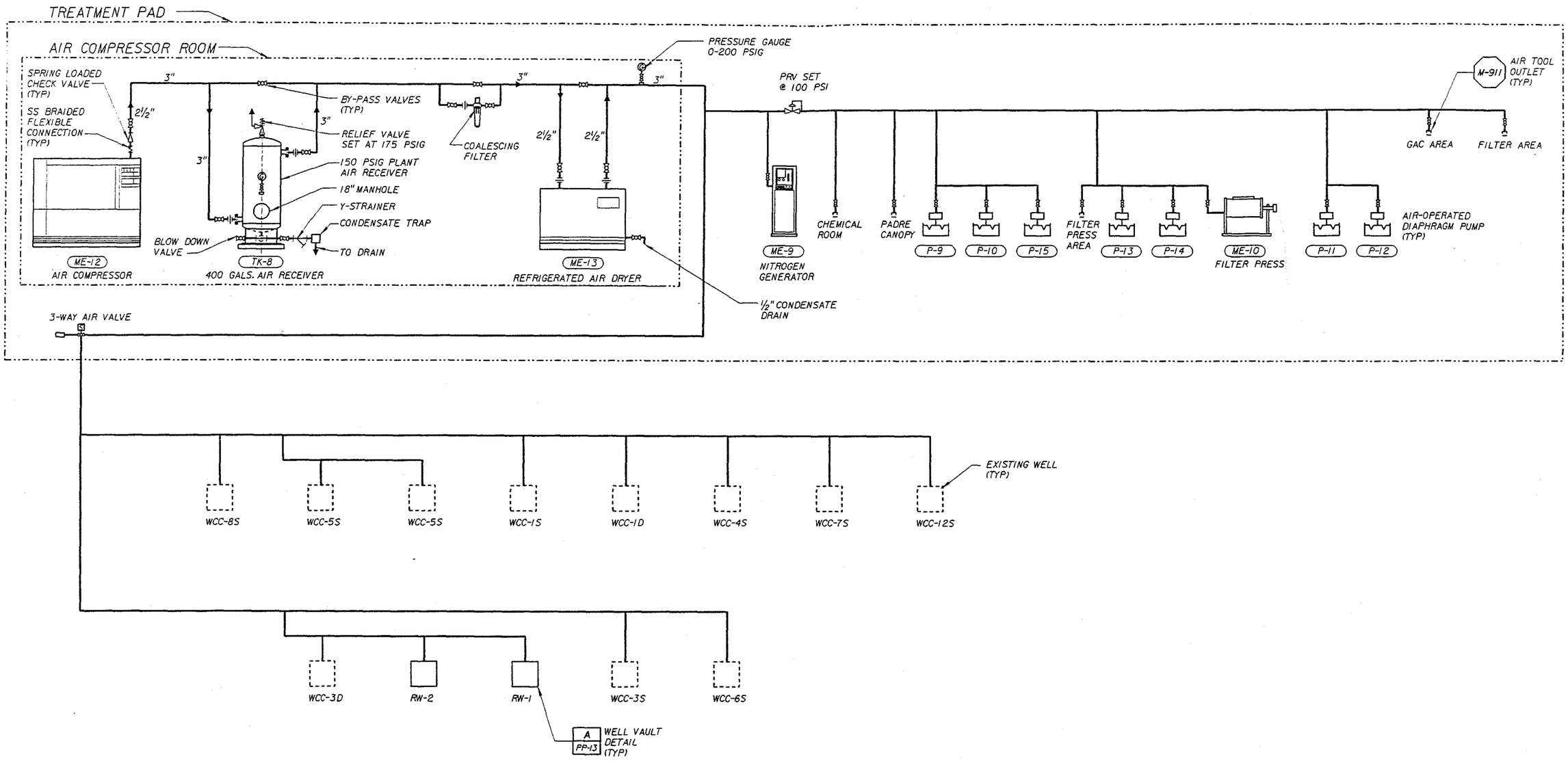

PP-4

R.H.	L.H.	NO REQ	SIZE & DESCRIPTION OF MATERIAL
DASH NO			

SCALE.	LIMITS ON DIM. UNLESS OTHERWISE NOTED.			SIGNATURE	DATE
NONE	ANGULAR	FRAC. DEC.	ENGR		
			DWN		
FAR NO.	LOCATION		CKD		
292116	47A-ID-1-A1		APPVD		
			APPVD		

TITLE SOIL / GROUNDWATER REMEDIAL DESIGN
C-6 TORRANCE FACILITY
PLANT AIR SCHEMATIC

DOUGLAS AIRCRAFT COMPANY
MCDONNELL DOUGLAS CORPORATION
FACILITIES

CI-701-4-111498

SHEET OF

MCDONNELL DOUGLAS CORPORATION - THIS INFORMATION IS SUBJECT TO DATA RIGHTS LEGENDS AT THE BEGINNING OF THE DOCUMENT.

MONTGOMERY WATSON
Pasadena, California

BOE-C6-0061187

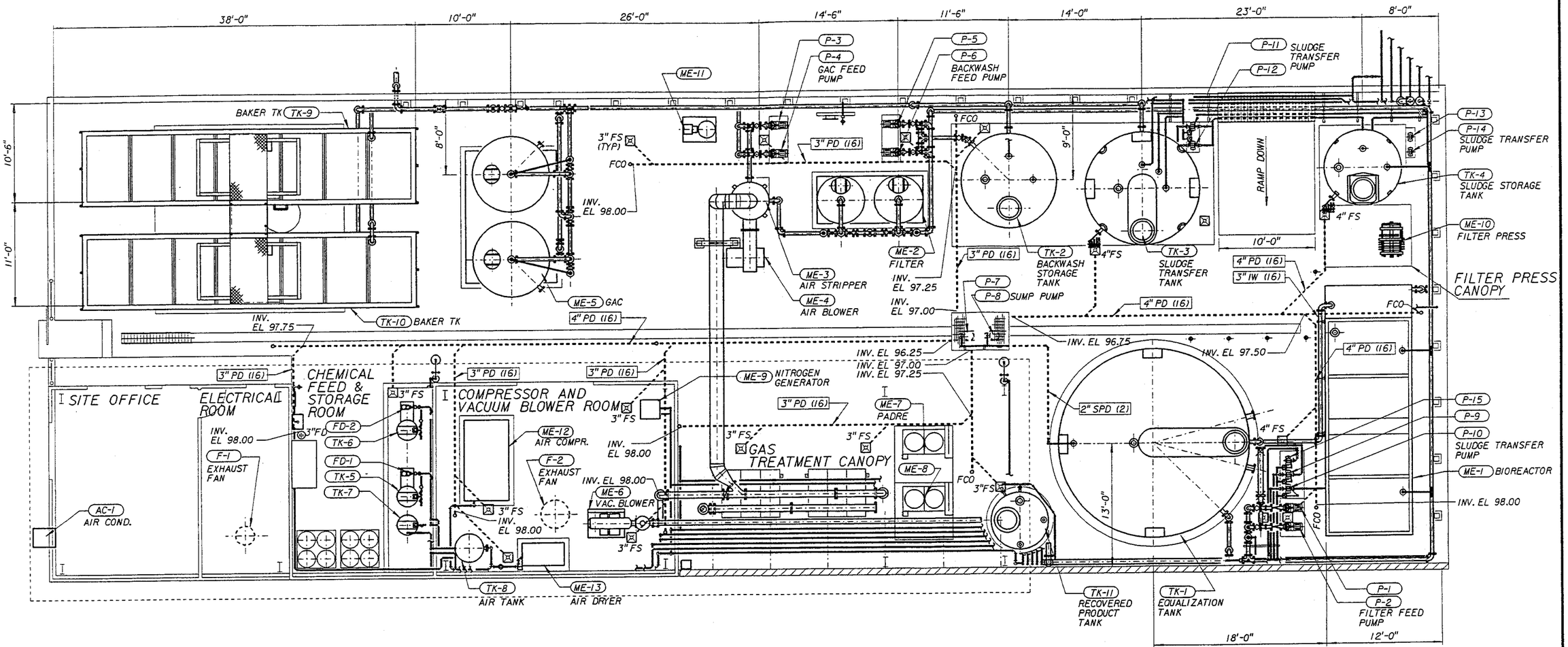

PP-5

0 8 16 Feet

3/16" = 1'-0"

MCDONNELL DOUGLAS CORPORATION - THIS INFORMATION IS SUBJECT TO DATA RIGHTS LEGENDS AT THE BEGINNING OF THE DOCUMENT.

MONTGOMERY WATSON

Pasadena, California

R.H.	L.H.	NO REQ	SIZE & DESCRIPTION OF MATERIAL		
DASH NO					
SCALE.	LIMITS ON DIM. UNLESS OTHERWISE NOTED.			SIGNATURE	DATE
3/16 = 1'-0"	ANGULAR	FRAC. DEC.	ENGR		
			DWN		
FAR NO.	LOCATION		CKD		
292116	47A-ID-1-A1		APPVD		
			APPVD		

TITLE SOIL / GROUNDWATER REMEDIAL DESIGN
C-6 TORRANCE FACILITY
TREATMENT PAD - EQUIPMENT PLAN

DOUGLAS AIRCRAFT COMPANY
MCDONNELL DOUGLAS CORPORATION
FACILITIES

CI-701-4-111498

SHEET OF

BOE-C6-0061188

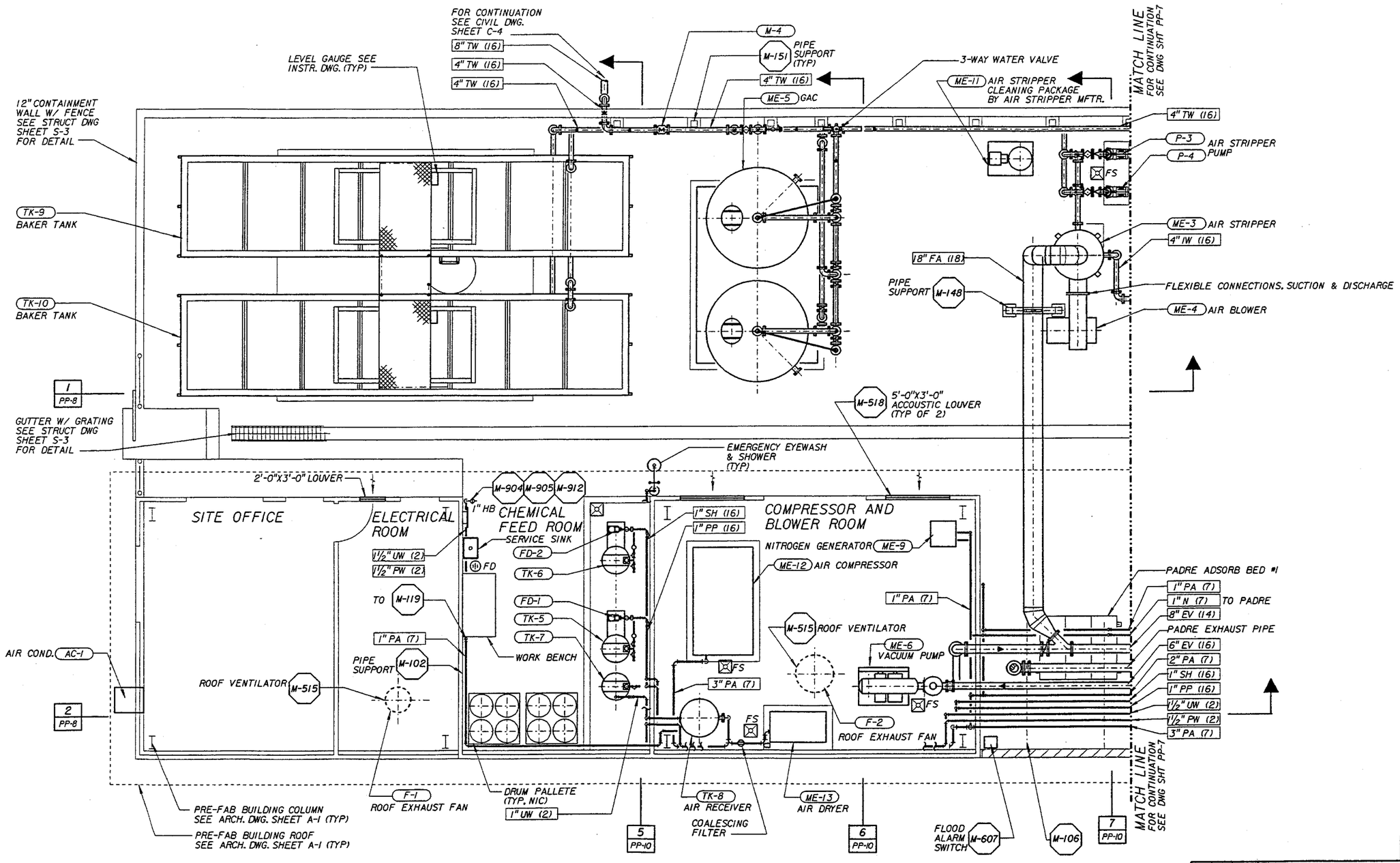

PP-6

0 4 8 12 Feet

¼" = 1'-0"

MCDONNELL DOUGLAS CORPORATION - THIS INFORMATION IS SUBJECT TO DATA RIGHTS LEGENDS AT THE BEGINNING OF THE DOCUMENT.

MONTGOMERY WATSON
Pasadena, California

R.H. L.H. DASH NO	NO REQ	SIZE & DESCRIPTION OF MATERIAL			
SCALE. ¼" = 1'-0"	LIMITS ON DIM. UNLESS OTHERWISE NOTED. ANGULAR	FRAC. DEC.		SIGNATURE	DATE
			ENGR		
			DWN		
FAR NO. 292116	LOCATION 47A-ID-1-A1		CKD		
			APPVD		
			APPVD		

TITLE SOIL / GROUNDWATER REMEDIAL DESIGN
C-6 TORRANCE FACILITY
TREATMENT PAD - WEST PLAN

DOUGLAS AIRCRAFT COMPANY
MCDONNELL DOUGLAS CORPORATION
FACILITIES

CI-701-4-111498

SHEET OF

BOE-C6-0061189

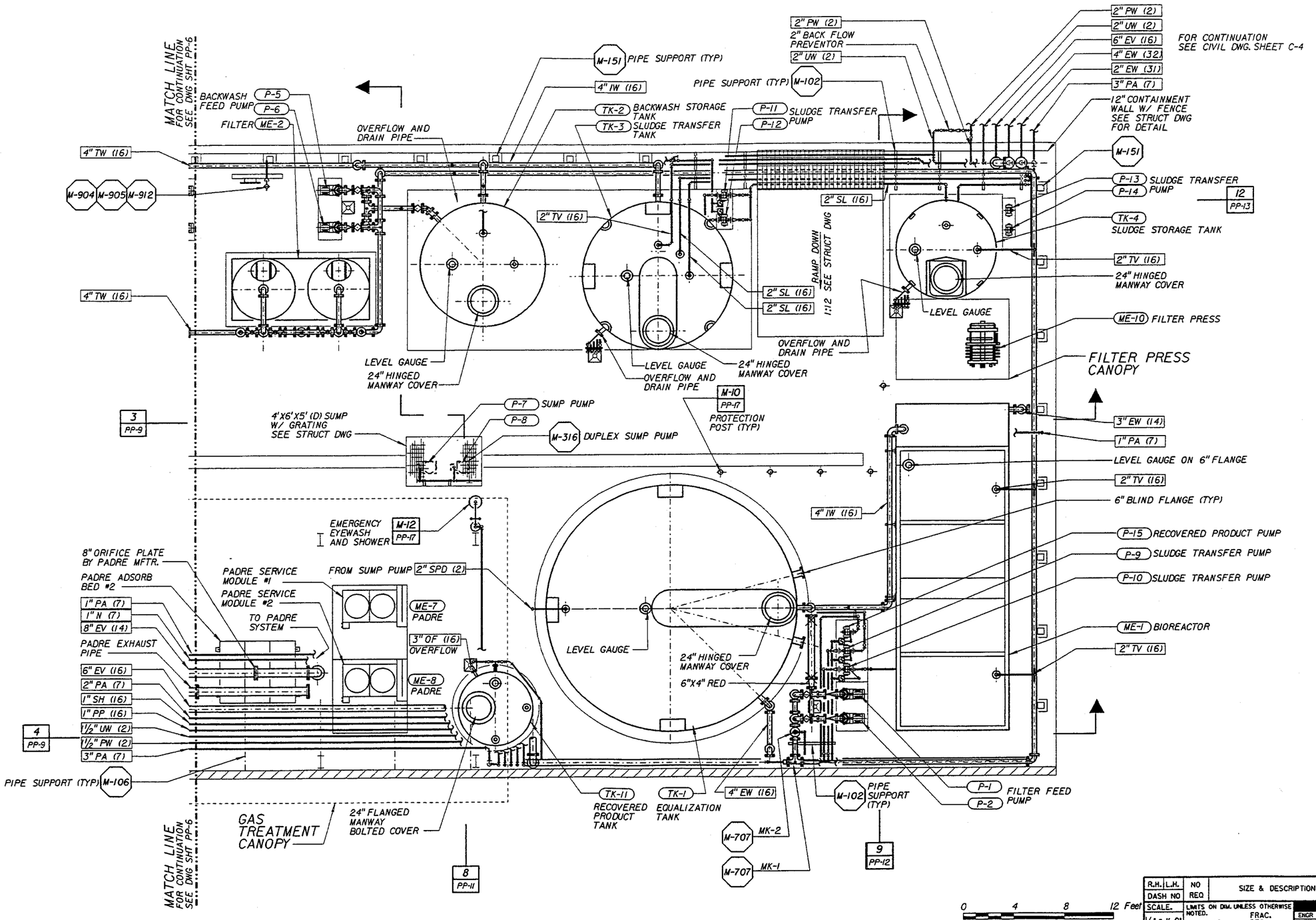

0 4 8 12 Feet

1/4" = 1'-0"

MCDONNELL DOUGLAS CORPORATION - THIS INFORMATION IS SUBJECT TO DATA RIGHTS LEGENDS AT THE BEGINNING OF THE DOCUMENT.

MONTGOMERY WATSON
Pasadena, California

PP-7

R.H. L.H. DASH NO	NO REQ	SIZE & DESCRIPTION OF MATERIAL

SCALE.	LIMITS ON DIM. UNLESS OTHERWISE NOTED.			SIGNATURE	DATE
1/4" = 1'-0"	ANGULAR	FRAC. DEC.	ENGR		
			DWN		
FAR NO.	LOCATION		CKD		
292116	47A-1D-1-A1		APPVD		
			APPVD		

TITLE SOIL / GROUNDWATER REMEDIAL DESIGN
C-6 TORRANCE FACILITY
TREATMENT PAD - EAST PLAN

DOUGLAS AIRCRAFT COMPANY
MCDONNELL DOUGLAS CORPORATION
FACILITIES

CI-701-4-111498

SHEET OF

BOE-C6-0061190

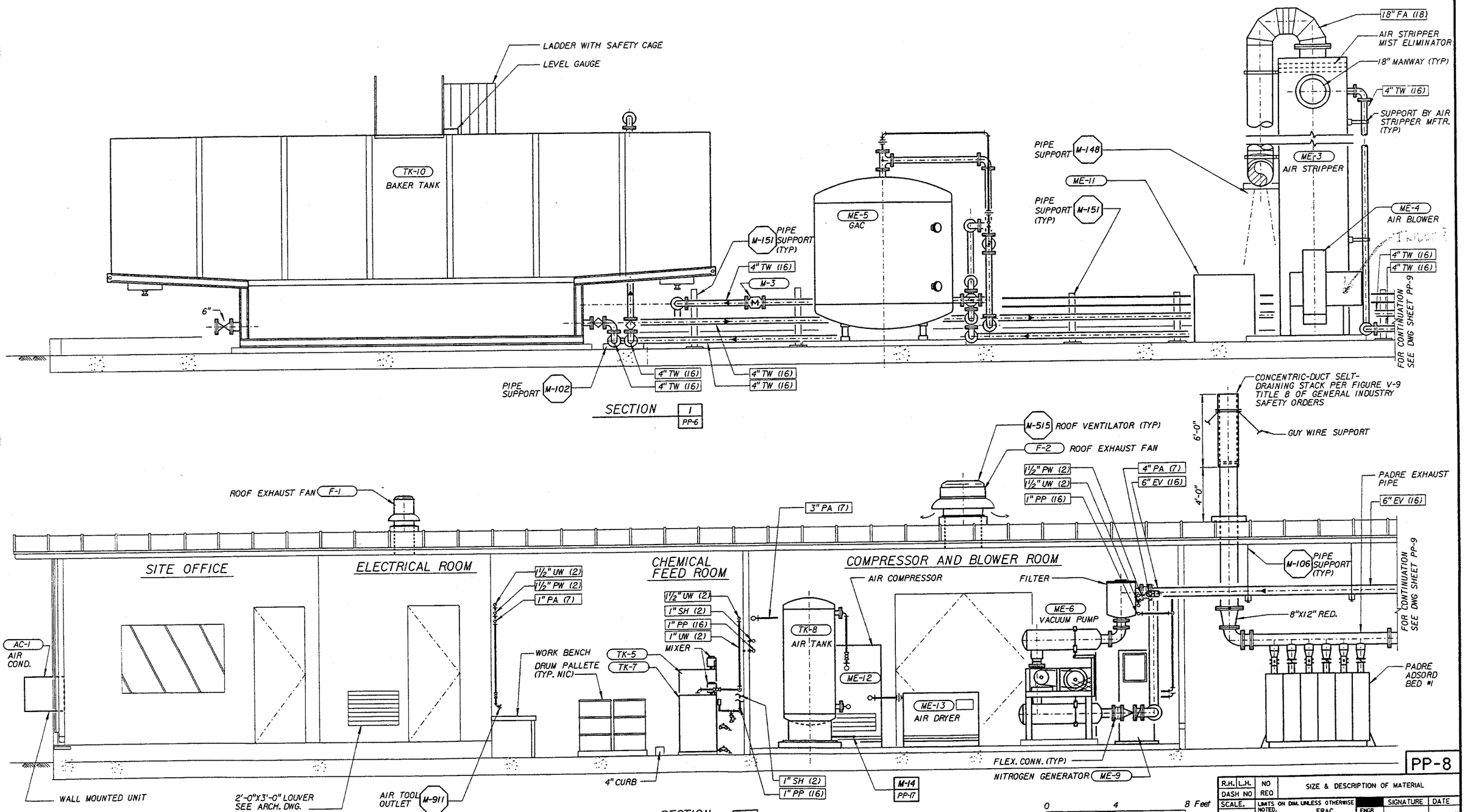

PP-8

MCDONNELL DOUGLAS CORPORATION - THIS INFORMATION IS SUBJECT TO DATA RIGHTS LEGENDS AT THE BEGINNING OF THE DOCUMENT.

MONTGOMERY WATSON
Pasadena, California

R.H.	L.H.	NO REQ	SIZE & DESCRIPTION OF MATERIAL			
DASH NO						
SCALE. 3/8" = 1'-0"	LIMITS ON DIM. UNLESS OTHERWISE NOTED. ANGULAR	FRAC. DEC.		ENGR	SIGNATURE	DATE
				DWN		
				CKD		
FAR NO. 292116	LOCATION 47A-ID-1-A1			APPVD		
				APPVD		

TITLE SOIL / GROUNDWATER REMEDIAL DESIGN
C-6 TORRANCE FACILITY
TREATMENT PAD - SECTION 1

DOUGLAS AIRCRAFT COMPANY
MCDONNELL DOUGLAS CORPORATION
FACILITIES

CI-701-4-111498
SHEET OF

BOE-C6-0061191

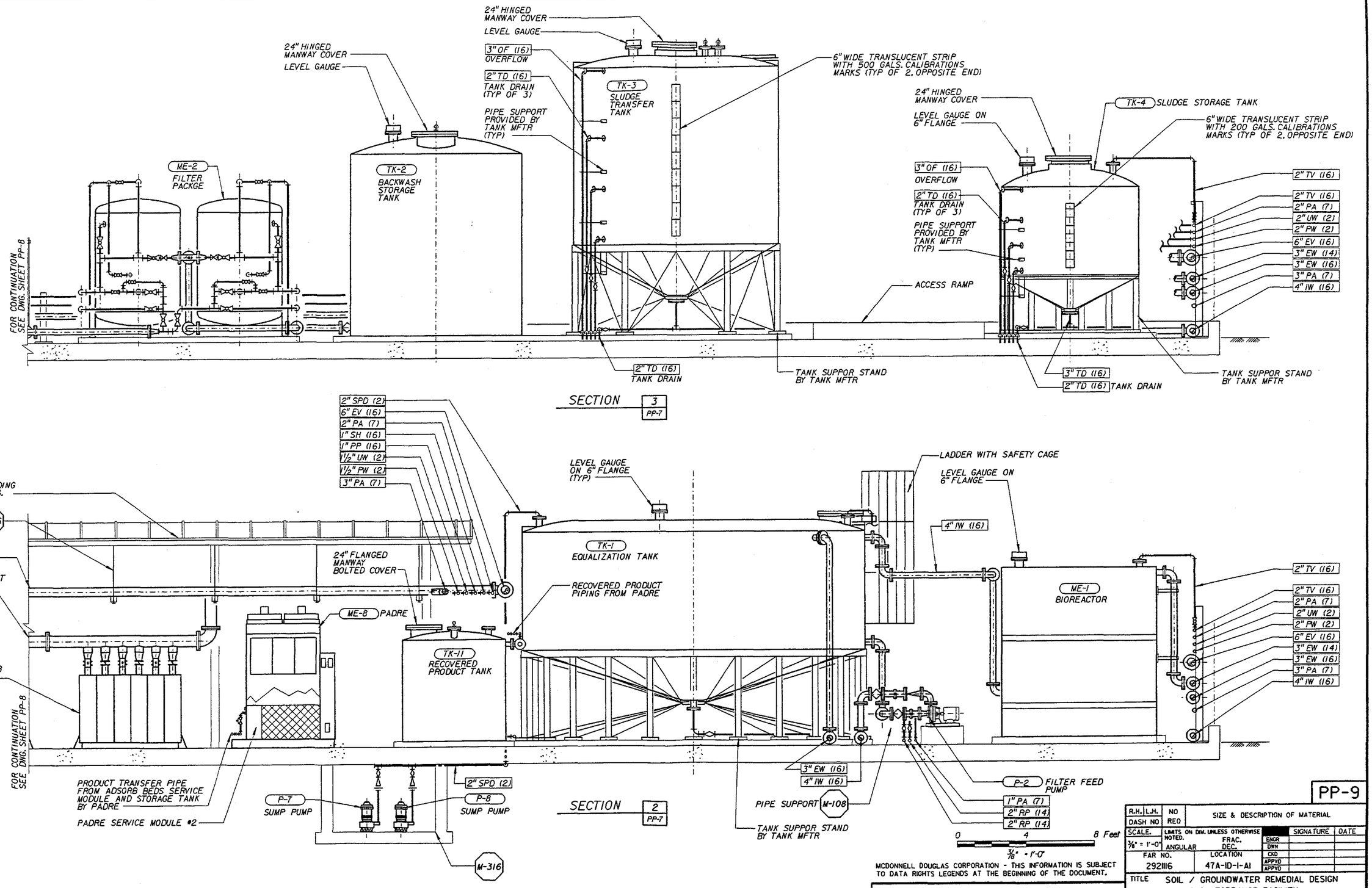

MCDONNELL DOUGLAS CORPORATION - THIS INFORMATION IS SUBJECT TO DATA RIGHTS LEGENDS AT THE BEGINNING OF THE DOCUMENT.

BOE-C6-0061192

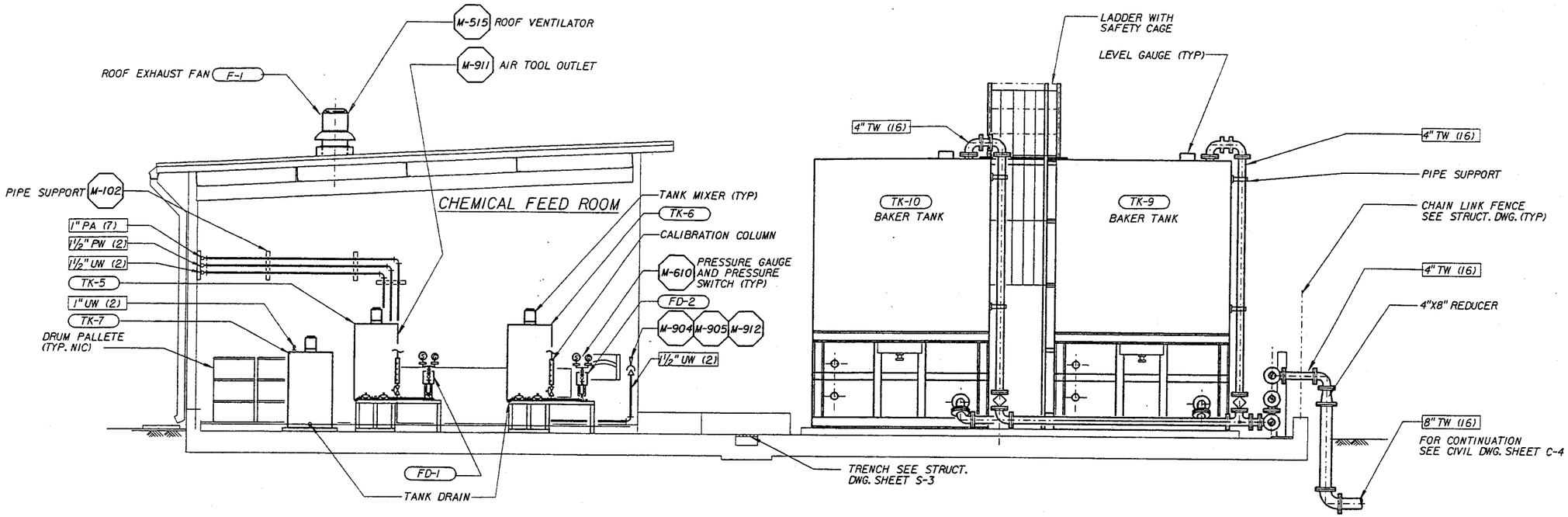

SECTION 5 / M-5

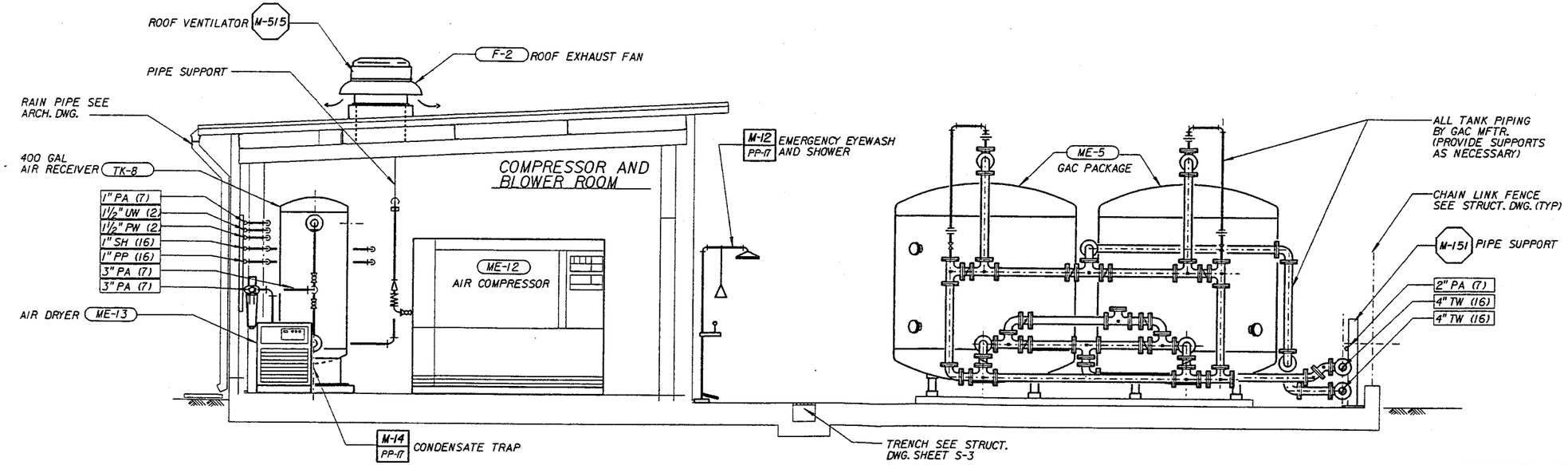

SECTION 6 / M-5

0 4 8 Feet

⅜" = 1'-0"

MCDONNELL DOUGLAS CORPORATION - THIS INFORMATION IS SUBJECT TO DATA RIGHTS LEGENDS AT THE BEGINNING OF THE DOCUMENT.

MONTGOMERY WATSON
Pasadena, California

PP-10

R.H.	L.H.	NO REQ	SIZE & DESCRIPTION OF MATERIAL			
DASH NO					SIGNATURE	DATE
SCALE. ⅜" = 1'-0"	LIMITS ON DIM. UNLESS OTHERWISE NOTED. ANGULAR		FRAC. DEC.	ENGR		
				DWN		
FAR NO. 292116			LOCATION 47A-ID-1-A1	CKD		
				APPVD		
				APPVD		

TITLE SOIL / GROUNDWATER REMEDIAL DESIGN
C-6 TORRANCE FACILITY
TREATMENT PAD - SECTION III

DOUGLAS AIRCRAFT COMPANY
MCDONNELL DOUGLAS CORPORATION
FACILITIES

CI-701-4-111498

SHEET OF

BOE-C6-0061193

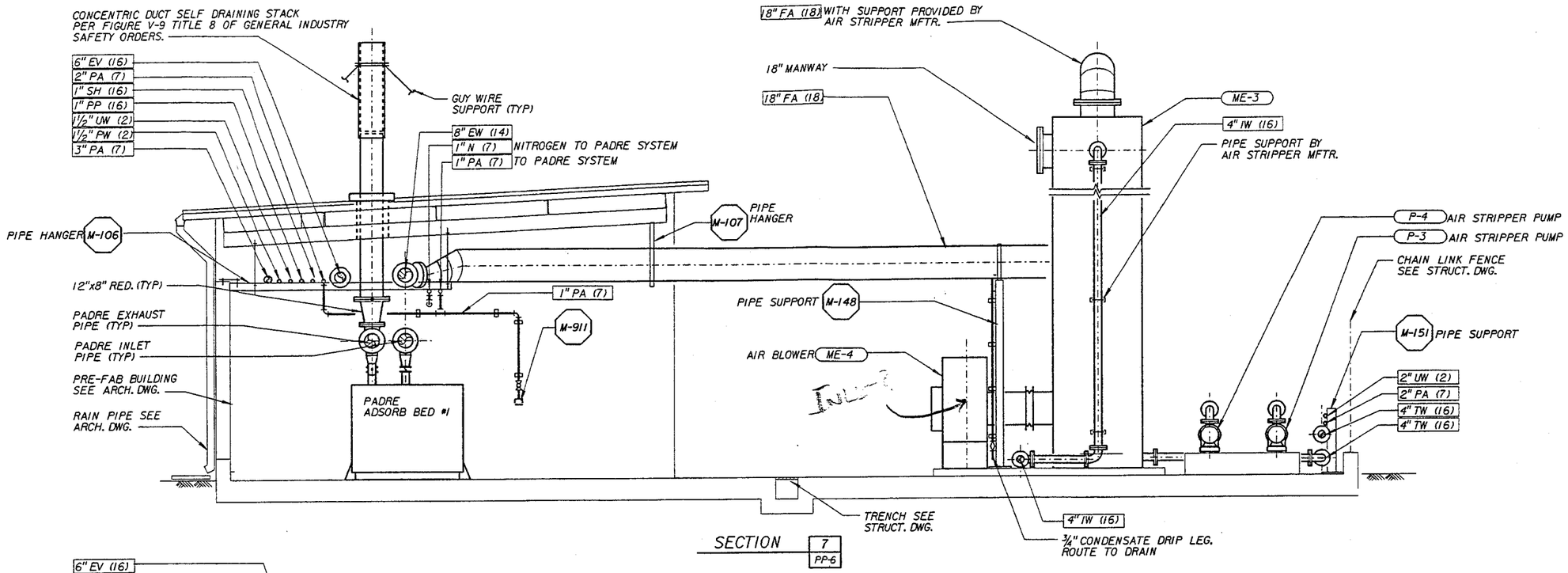

SECTION 7 / PP-6

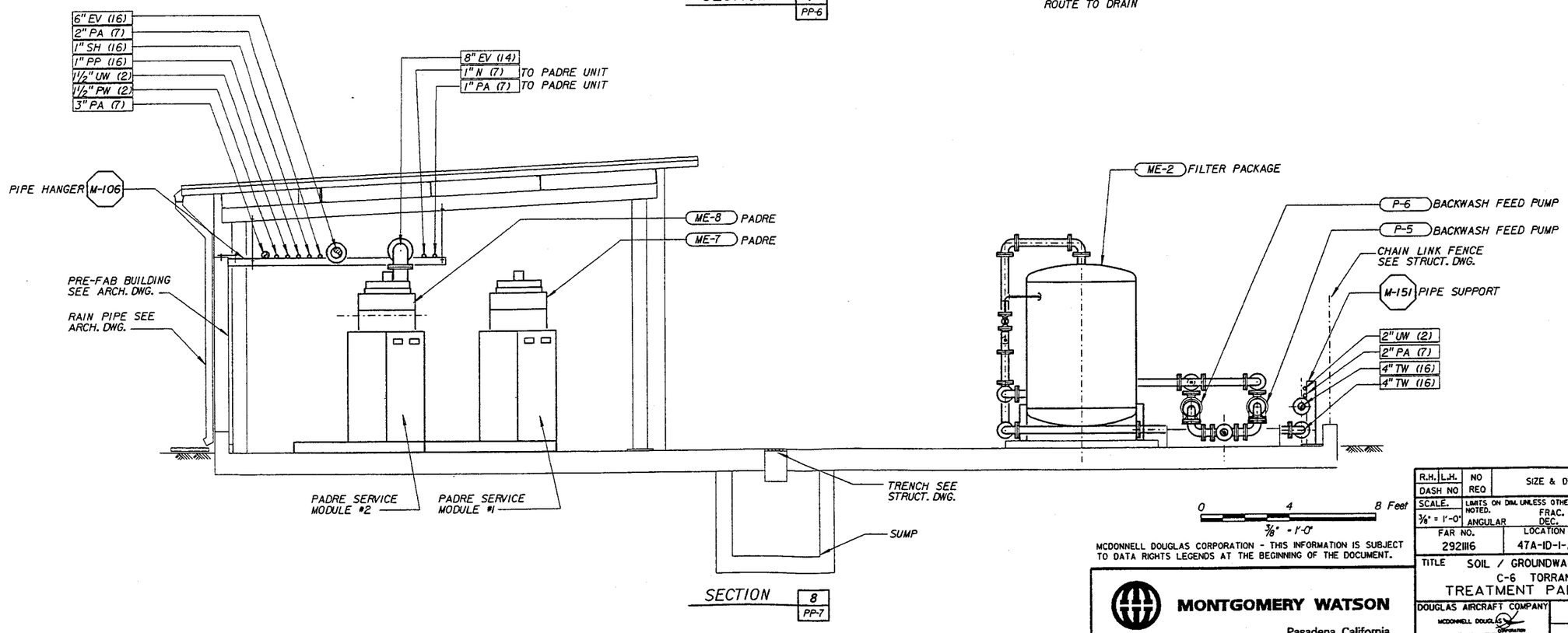

SECTION 8 / PP-7

0 4 8 Feet
⅜" = 1'-0"

MCDONNELL DOUGLAS CORPORATION - THIS INFORMATION IS SUBJECT TO DATA RIGHTS LEGENDS AT THE BEGINNING OF THE DOCUMENT.

MONTGOMERY WATSON
Pasadena, California

PP-II

R.H. L.H. DASH NO	NO REQ	SIZE & DESCRIPTION OF MATERIAL			
SCALE: ⅜" = 1'-0"	LIMITS ON DIM. UNLESS OTHERWISE NOTED. ANGULAR	FRAC. DEC.		SIGNATURE	DATE
FAR NO. 292116	LOCATION 47A-ID-1-A1		ENGR / DWN / CKD / APPVD / APPVD		

TITLE SOIL / GROUNDWATER REMEDIAL DESIGN
C-6 TORRANCE FACILITY
TREATMENT PAD - SECTION IV

DOUGLAS AIRCRAFT COMPANY
MCDONNELL DOUGLAS CORPORATION
FACILITIES

CI-701-4-111498
SHEET OF

BOE-C6-0061194

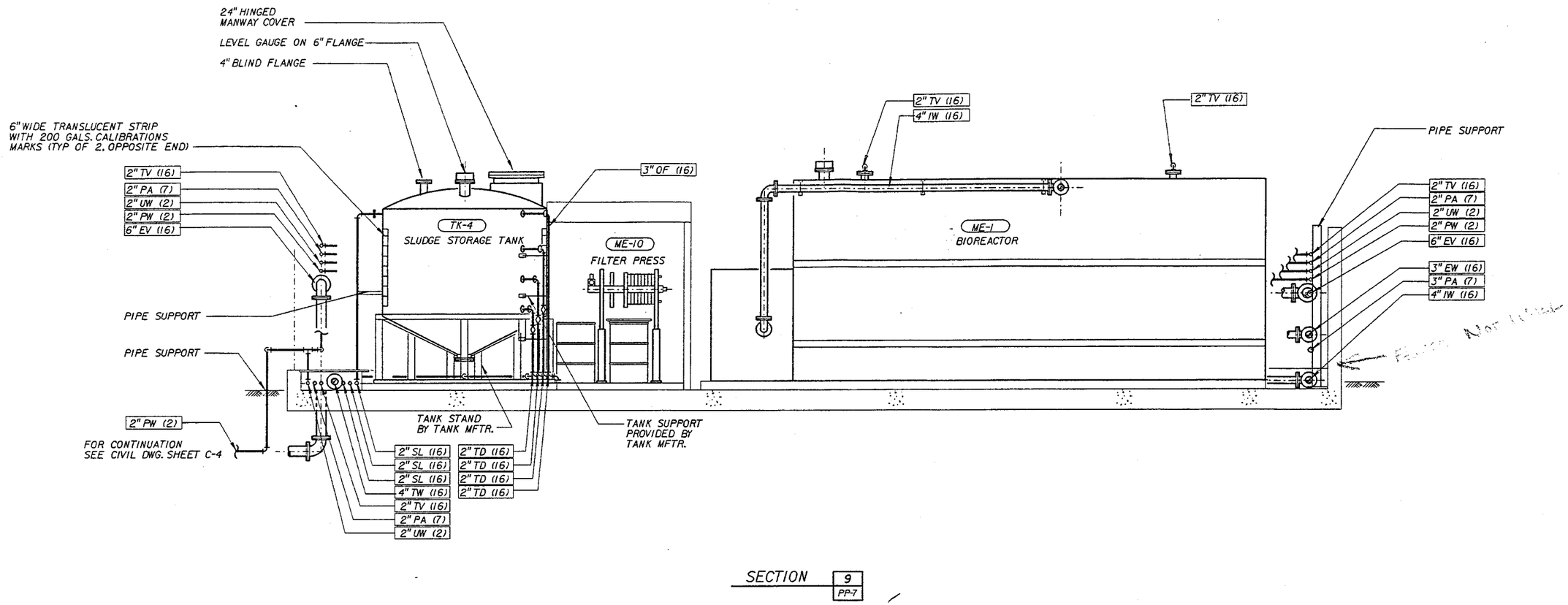

SECTION 9 / PP-7

PP-12

0 4 8 Feet

3/8" = 1'-0"

MCDONNELL DOUGLAS CORPORATION - THIS INFORMATION IS SUBJECT TO DATA RIGHTS LEGENDS AT THE BEGINNING OF THE DOCUMENT.

MONTGOMERY WATSON
Pasadena, California

R.H. L.H. DASH NO	NO REQ	SIZE & DESCRIPTION OF MATERIAL			
SCALE. 3/8" = 1'-0"	LIMITS ON DIM. UNLESS OTHERWISE NOTED. ANGULAR	FRAC. DEC.		SIGNATURE	DATE
			ENGR		
			DWN		
FAR NO. 292116	LOCATION 47A-ID-1-A1		CKD		
			APPVD		
			APPVD		

TITLE SOIL / GROUNDWATER REMEDIAL DESIGN
C-6 TORRANCE FACILITY
TREATMENT PAD - SECTION V

DOUGLAS AIRCRAFT COMPANY
MCDONNELL DOUGLAS CORPORATION
FACILITIES

CI-701-4-111498

SHEET OF

FILE No. 292116 PP-12 MCDONNELL DOUGLAS CORPORATION
BOE-C6-0061195

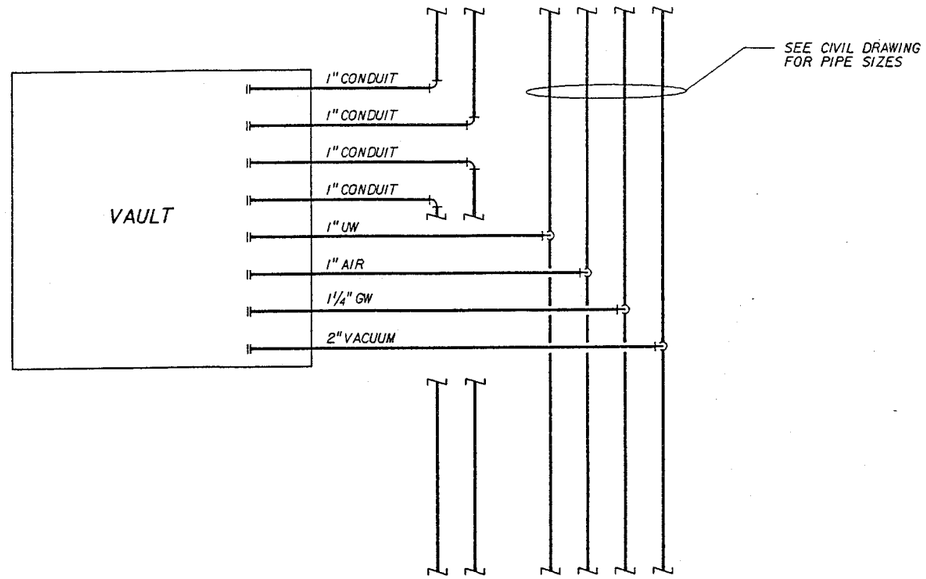

TYPICAL VAULT PIPING LAYOUT — A / VAR

NTS

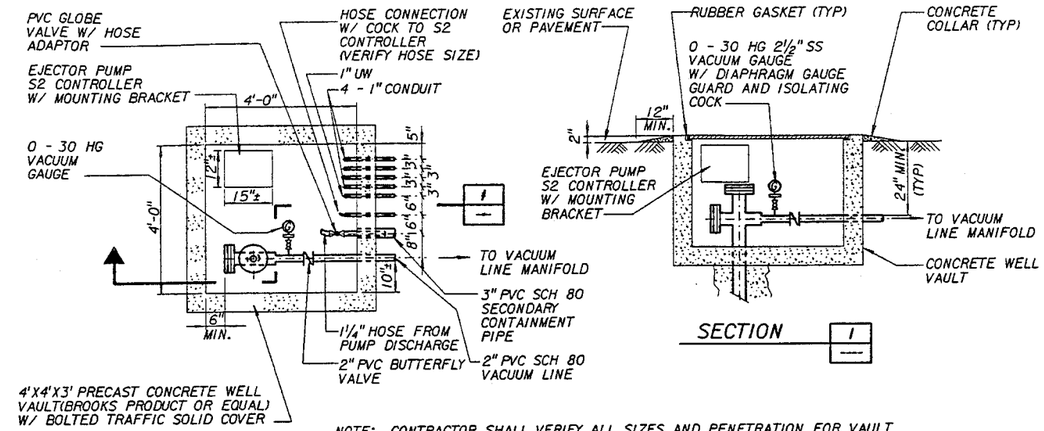

NOTE: CONTRACTOR SHALL VERIFY ALL SIZES AND PENETRATION FOR VAULT FABRICATION. ALL PENETRATION SHALL BE SEALED W/ POLYURETHANE SEALANT.

TYPICAL WELL VAULT INSTALLATION — B / VAR

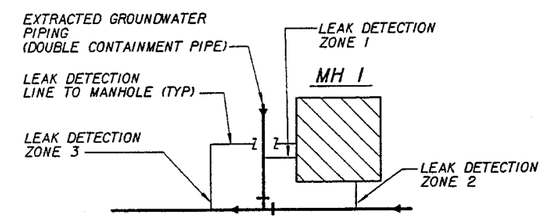

LEAK DETECTION MH 1

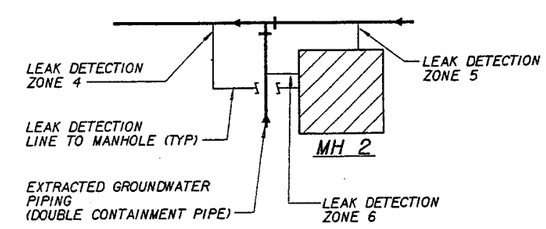

LEAK DETECTION MH 2

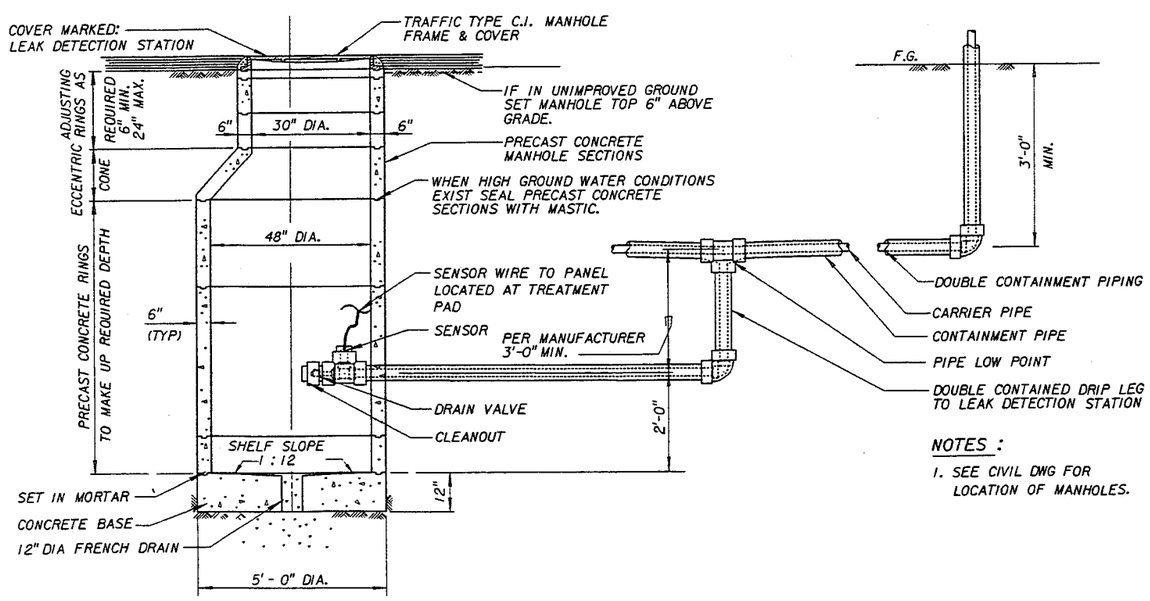

NOTES :

1. SEE CIVIL DWG FOR LOCATION OF MANHOLES.

DOUBLE CONTAINMENT PIPING UNDERGROUND LEAK DETECTION STATION — C / VAR

0 2 4 6 Feet

1/2" = 1'-0"

MCDONNELL DOUGLAS CORPORATION - THIS INFORMATION IS SUBJECT TO DATA RIGHTS LEGENDS AT THE BEGINNING OF THE DOCUMENT.

MONTGOMERY WATSON
Pasadena, California

PP-13

1/2" = 1'-0"

R.H.	L.H.	NO REQ	SIZE & DESCRIPTION OF MATERIAL
DASH NO			

SCALE.	LIMITS ON DIM. UNLESS OTHERWISE NOTED. ANGULAR / FRAC. DEC.		SIGNATURE	DATE
		ENGR		
		DWN		
FAR NO. 292116	LOCATION 47A-1D-1-A1	CKD		
		APPVD		
		APPVD		

TITLE SOIL / GROUNDWATER REMEDIAL DESIGN
C-6 TORRANCE FACILITY
WELL PUMP VAULT LAYOUT

DOUGLAS AIRCRAFT COMPANY
MCDONNELL DOUGLAS CORPORATION
FACILITIES

CI-701-4-111498

SHEET OF

FILE NO.

BOE-C6-0061196

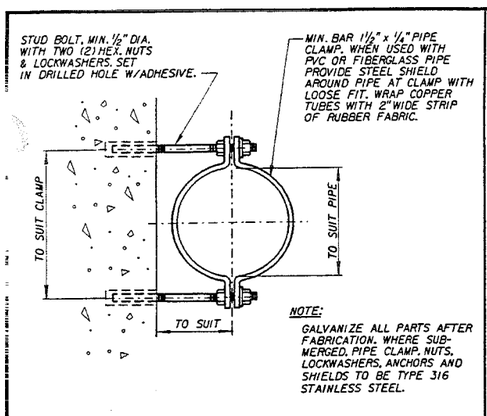

PIPE CLAMP

REV. 070193 M-101

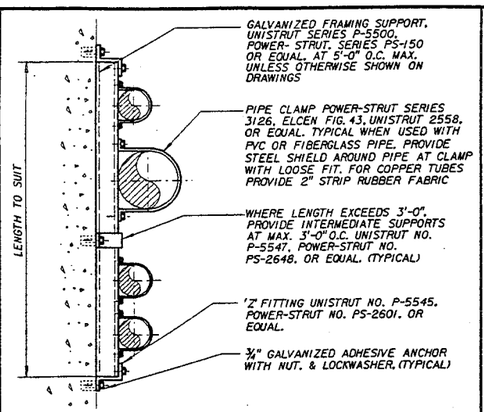

FLUSH MOUNTED PIPE SUPPORT

REV. 070193 M-102

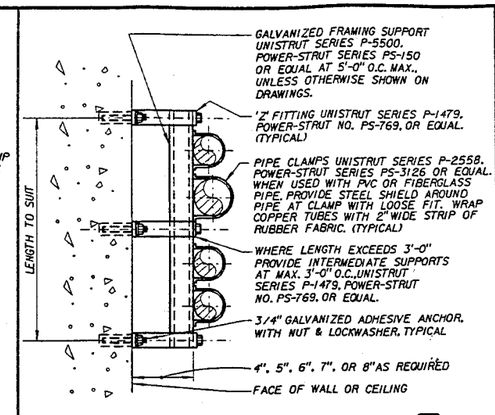

EXTENDED PIPE SUPPORT

REV. 070193 M-103

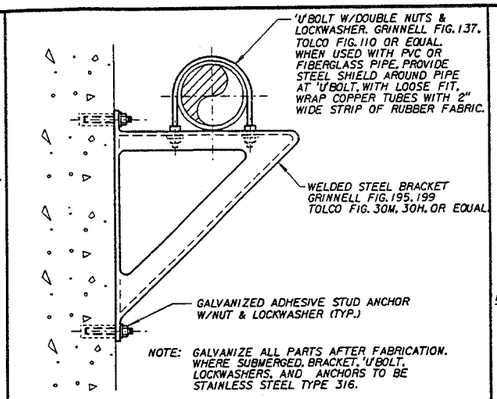

PIPE BRACKET

REV. 070193 M-104

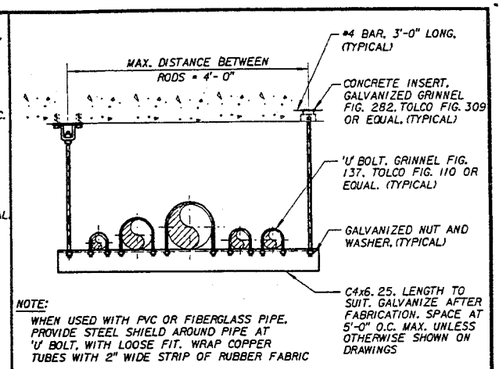

TRAPEZE PIPE HANGER

REV. 070193 M-106

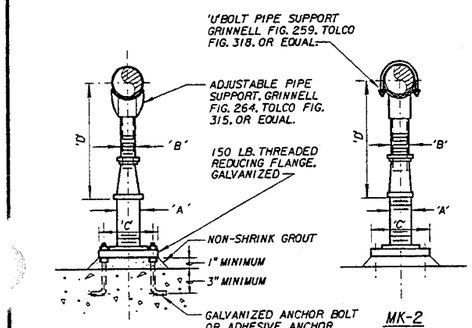

ADJUSTABLE PIPE SUPPORT APPROXIMATE DIMENSIONS IN INCHES					
PIPE SIZE	'A'	'B'	'C'	'D' MINIMUM	'D' MAXIMUM
2-1/2	2-1/2	1-1/2	9	8	11-1/2
3	2-1/2	1-1/2	9	8-1/4	11-3/4
3-1/2	2-1/2	1-1/2	9	8-1/2	12
4	3	* 2-1/2	9	10-1/4	14
6	3	* 2-1/2	9	11-5/8	15-1/4
8	3	* 2-1/2	9	13-5/8	16-1/2
10	3	* 2-1/2	9	14-5/8	18-1/4
12	3	* 2-1/2	9	15-5/8	19-3/4
14	4	3	11	18-7/8	20-3/4
16	4	3	11	19-7/8	22-1/4
18	6	3-1/2	13-1/2	21-1/4	24
20	6	3-1/2	13-1/2	23-1/4	25-1/2
24	6	4	13-1/2	26-1/2	28-1/4
30	6	4	13-1/2	29-5/8	31-1/2
32	6	4	13-1/2	30-5/8	32-3/4
36	6	4	13-1/2	32-5/8	34-3/4

* SEE MFR.

ADJUSTABLE PIPE SUPPORT WITH OR WITHOUT 'U' BOLT

REV. 070193 M-108

NOTE:
THIS SLEEVE IS TO BE USED BETWEEN DRY SPACES, ONLY.

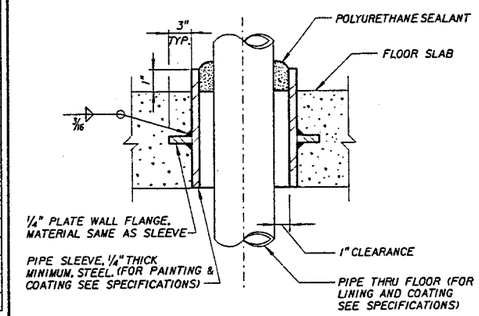

FLOOR PIPE SLEEVE

REV. 070193 M-130

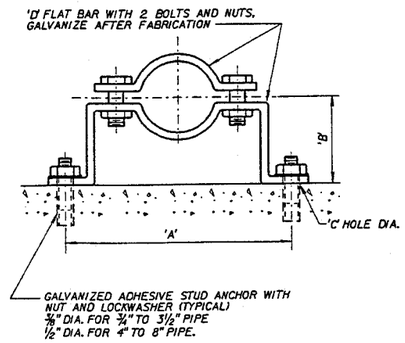

DIMENSIONS IN INCHES					
PIPE DIA.	'A'	'B' SEE NOTE 3 BELOW	'C' HOLE DIA	'D' FLAT BAR SIZE	LOAD RATING LBS.*
3/4	5-15/16	2-1/2	7/16	3/16 x 1-1/4	300
1	6-1/4	2-5/8	7/16	3/16 x 1-1/4	300
1-1/4	6-11/16	2-3/4	7/16	3/16 x 1-1/4	300
1-1/2	6-15/16	3	7/16	3/16 x 1-1/4	300
2	8-5/16	3-3/16	7/16	1/4 x 1-1/4	500
2-1/2	8-7/8	3-7/16	7/16	1/4 x 1-1/4	500
3	9-1/8	3-3/4	7/16	1/4 x 1-1/4	500
3-1/2	10-1/16	4	7/16	1/4 x 1-1/4	500
4	10-9/16	4-1/4	9/16	1/4 x 1-1/2	600
5	11-3/4	4-3/4	9/16	1/4 x 1-1/2	600
6	14-3/8	5-5/16	9/16	3/8 x 1-1/2	850
8	16-5/8	6-5/16	9/16	3/8 x 1-1/2	850

* SAFETY FACTOR OF 5

NOTES:

1. WHERE SUBMERGED, PIPE CLAMP, ANCHOR, SHIELD, NUTS AND LOCKWASHER TO BE TYPE 316 STAINLESS STEEL.
2. WHEN USED WITH PVC OR FIBERGLASS PIPE, PROVIDE STEEL SHIELD AROUND PIPE AT CLAMP, WITH LOOSE FIT. WRAP COPPER TUBES WITH 2" STRIP OF RUBBER FABRIC.
3. FOR FLANGED PIPING, INCREASE 'B' DIMENSION AS REQUIRED.

PIPE CLAMP FOR INDIVIDUAL PIPES

REV. 070193 M-131

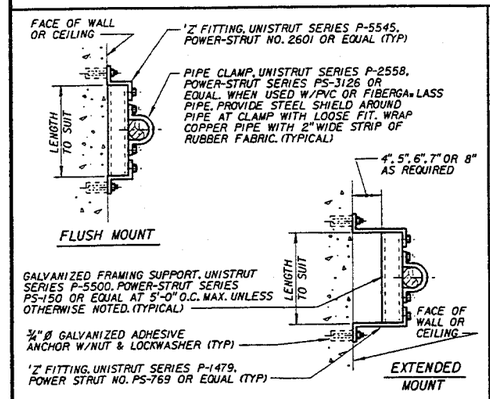

PIPE SUPPORT FOR INDIVIDUAL PIPES

REV. 070193 M-139

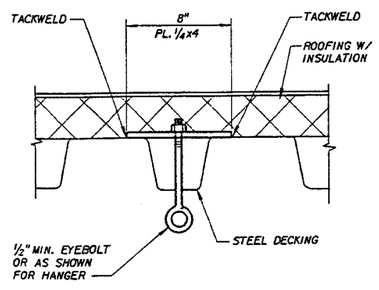

EYEBOLT CONNECTION TO STEEL DECKING FOR PIPE HANGER

REV. 070193 M-141

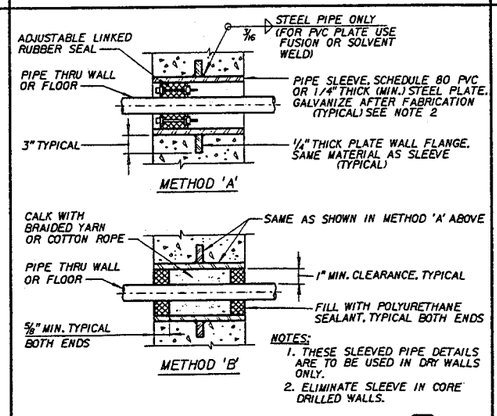

NOTES:

1. THESE SLEEVED PIPE DETAILS ARE TO BE USED IN DRY WALLS ONLY.
2. ELIMINATE SLEEVE IN CORE DRILLED WALLS.

SLEEVED PIPE OPENING

REV. 070193 M-111

PP-14

R.H.	L.H.	NO REQ	SIZE & DESCRIPTION OF MATERIAL		
DASH NO					
SCALE.	LIMITS ON DIM. UNLESS OTHERWISE NOTED.			SIGNATURE	DATE
NOTE	ANGULAR	FRAC. DEC.	ENGR		
			DWN		
FAR NO. 292116	LOCATION 47A-ID-1-A1		CKD		
			APPVD		
			APPVD		

TITLE SOIL / GROUNDWATER REMEDIAL DESIGN
C-6 TORRANCE FACILITY
MECHANICAL DETAILS - 1

DOUGLAS AIRCRAFT COMPANY
MCDONNELL DOUGLAS CORPORATION
FACILITIES

CI-701-4-111498

SHEET OF

MCDONNELL DOUGLAS CORPORATION - THIS INFORMATION IS SUBJECT TO DATA RIGHTS LEGENDS AT THE BEGINNING OF THE DOCUMENT.

MONTGOMERY WATSON
Pasadena, California

BOE-C6-0061197

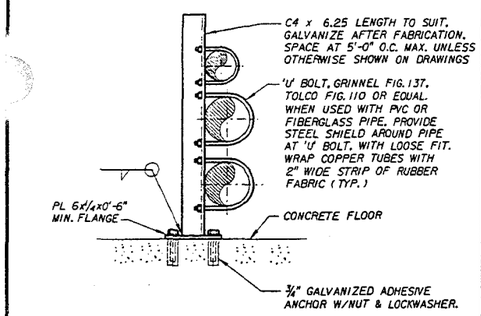

PIPE SUPPORT

REV. 070193 M-150

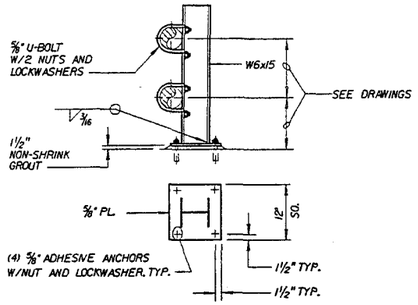

PIPE SUPPORT

REV. 070193 M-151

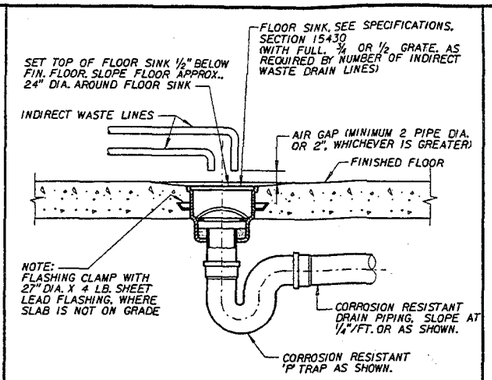

CORROSION RESISTANT FLOOR SINK

REV. 070193 M-309

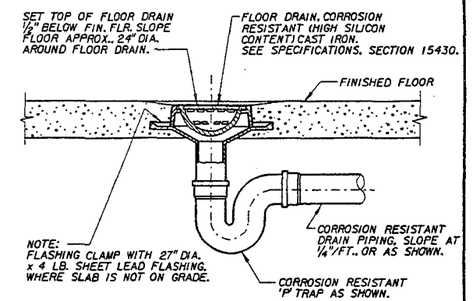

CORROSION RESISTANT FLOOR DRAIN

REV. 070193 M-310

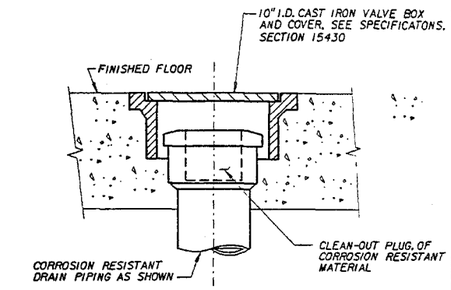

CORROSION RESISTANT CLEANOUT IN FINISHED FLOOR

REV. 070193 M-312

PUMP NO.	LOCATION	DIMENSIONS IN INCHES 'A'	'B'	'C'	'D'	'E'
P-9, P-10	TREATMENT PAD SUMP	72	60	48	2	2

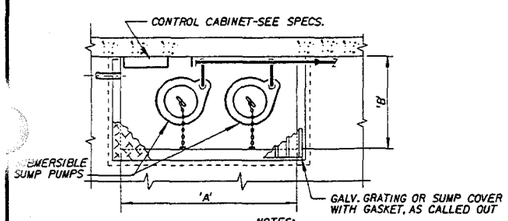

PLAN

NOTES:
1. FOR ENTERING DRAINS, SEE DWGS.
2. SEE SPECIFICATIONS: SECTION 11209

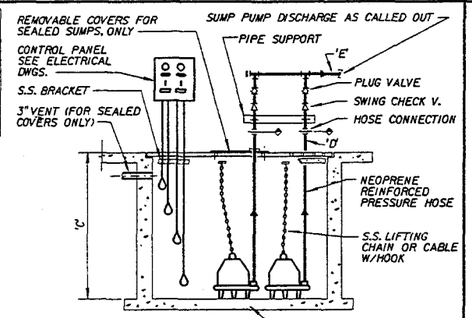

SECTION

DRAINAGE SUMP WITH DUPLEX PUMPS

REV. 070193 M-316

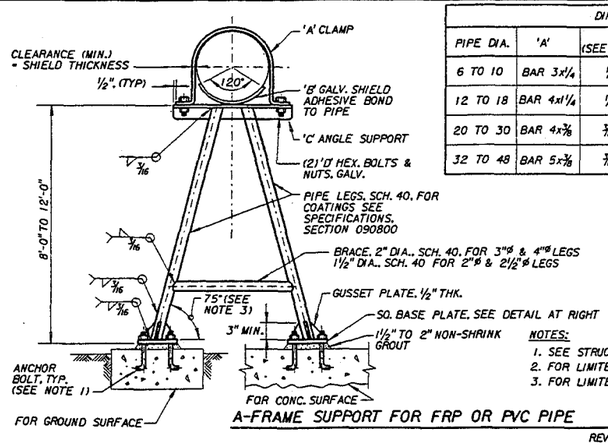

DIMENSIONS IN INCHES PIPE DIA.	'A'	'B' (SEE NOTE 2)	'C'	'D'	LEGS
6 TO 10	BAR 3x1/4	1/8x4	L 4x4x1/4	5/8x1 1/2 LG.	8 TO 12 FT. H., 2 1/2"ø LESS 8 FT. H., 2"ø
12 TO 18	BAR 4x1 1/4	1/8x8	L 5x5x1/4	3/4x1 1/2 LG.	8 TO 12 FT. H., 3"ø LESS 8 FT. H., 2 1/2"ø
20 TO 30	BAR 4x3/8	3/16x12	L 5x5x3/8	7/8x2 LG.	8 TO 12 FT. H., 4"ø LESS 8 FT. H., 3"ø
32 TO 48	BAR 5x3/8	3/16x16	L 6x6x3/8	1x2 LG.	8 TO 12 FT. H., 4"ø LESS 8 FT. H., 3"ø

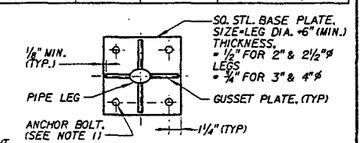

BASE PLATE DETAIL

NOTES:
1. SEE STRUCT. DWG FOR CONCRETE BASE & ANCHOR BOLT SIZES.
2. FOR LIMITED SPACE, CUT SHIELD LENGTH TO SUIT.
3. FOR LIMITED SPACE, INCREASE ANGLE TO NARROW SPREAD OF LEGS.

A-FRAME SUPPORT FOR FRP OR PVC PIPE

REV. 070193 M-148

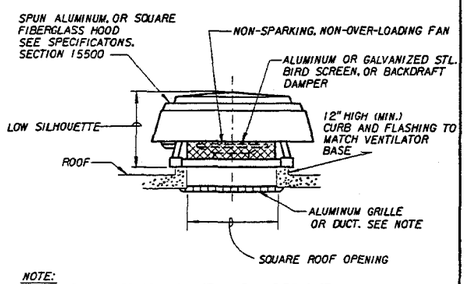

NOTE:
WITH SUSPENDED CEILING INSTALL FULL-SIZE DUCT FROM ROOF OPENING TO CEILING GRILLE.

POWER ROOF VENTILATOR

REV. 070193 M-515

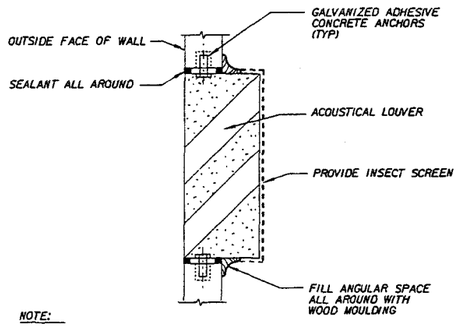

NOTE:
SEE SPECIFICATIONS: SECTION 15500

ACOUSTICAL LOUVER

REV. 070193 M-518

PP-15

R.H. L.H. DASH NO	NO REQ	SIZE & DESCRIPTION OF MATERIAL
SCALE. NONE	LIMITS ON DIM. UNLESS OTHERWISE NOTED. ANGULAR FRAC. DEC.	SIGNATURE / DATE: ENGR, DWN, CKD, APPVD, APPVD
FAR NO. 292116	LOCATION 47A-10-1-A1	

TITLE SOIL / GROUNDWATER REMEDIAL DESIGN
C-6 TORRANCE FACILITY
MECHANICAL DETAILS - II

DOUGLAS AIRCRAFT COMPANY
MCDONNELL DOUGLAS CORPORATION
FACILITIES

CI-701-4-111498

SHEET OF

MCDONNELL DOUGLAS CORPORATION - THIS INFORMATION IS SUBJECT TO DATA RIGHTS LEGENDS AT THE BEGINNING OF THE DOCUMENT.

MONTGOMERY WATSON
Pasadena, California

BOE-C6-0061198

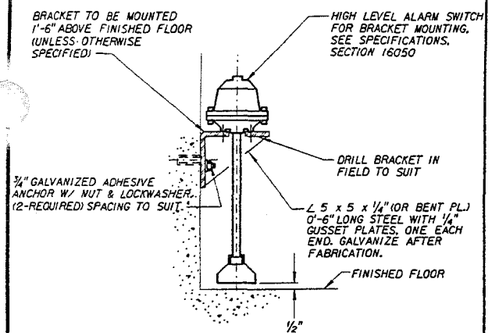

FLOOD ALARM SWITCH

REV. 070193 M-607

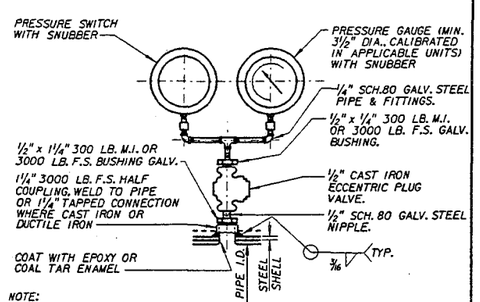

NOTE:
SEE SPECIFICATIONS, SECTIONS 15130 AND 16050.

PRESSURE GAUGE AND PRESSURE SWITCH

REV. 070193 M-610

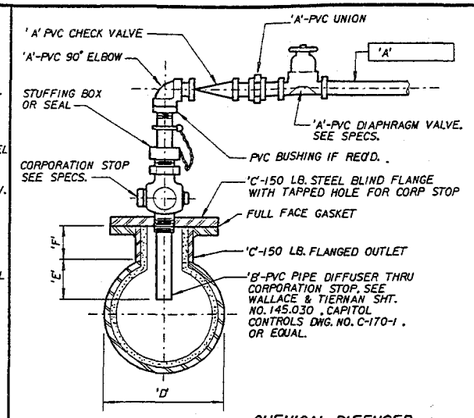

IDENT. MARK	CHEMICAL	CAPACITY	DIMENSIONS IN INCHES					
			'A'	'B'	'C'	'D'	'E'	'F'
MK-1	POTASSIUM PERMANGANATE	0.2 LB/HOUR	1	1	4	4	2	4
MK-2	SODIUM HYPOCHLORITE	0.2 LB/HOUR	1	1	4	4	2	4

CHEMICAL DIFFUSER

REV. 081793 M-707

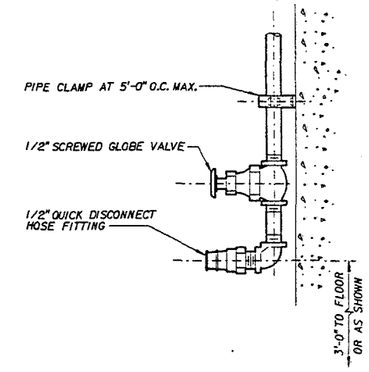

AIR TOOL OUTLET

REV. 070193 M-911

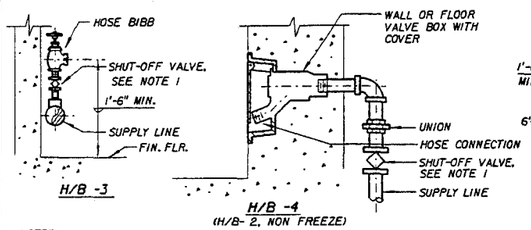

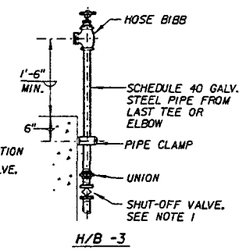

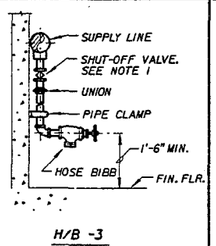

NOTES:

1. ALL HOSE BIBBS TO BE CONTROLLED BY INDIVIDUAL SHUT-OFF VALVES (BALL OR PLUG VALVES), EXCEPT WHERE INDIVIDUALLY CONTROLLED BRANCH MAIN SERVES HOSE BIBBS ONLY.
2. FOR SIZE AND LOCATION SEE DRAWINGS.
3. PROVIDE WARNING SIGN, WHEN USED FOR NON-POTABLE WATER
4. SEE SPECIFICATIONS, SECTIONS 15110 AND 15430

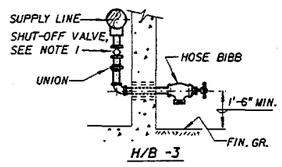

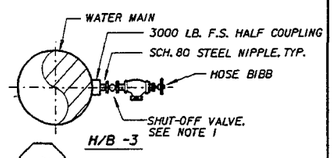

HOSE BIBBS

REV. 070193 M-904

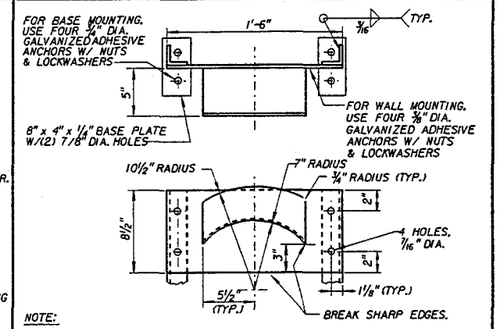

NOTE:

1. WHERE HOSE RACK IS FREE-STANDING, PROVIDE (2) STL. ∠'S 2 x 2 x 1/4 W/ BASE PLATES. (OMIT BASE PLATES WHERE ANGLES CAN BE SET IN CONCRETE.)
2. CONSTRUCTION: 8 GA. STEEL SHEET, ALL WELDED, GALVANIZED AFTER FABRICATION

HOSE RACK

REV. 070193 M-905

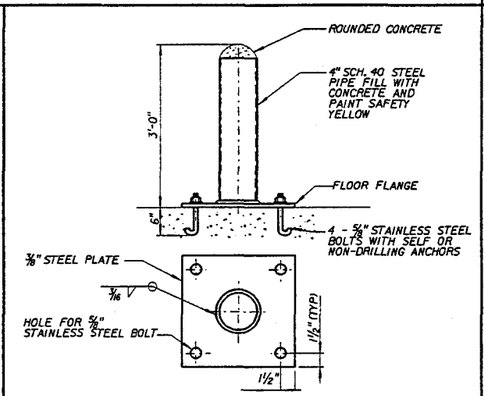

PROTECTION POST

M-10 VAR

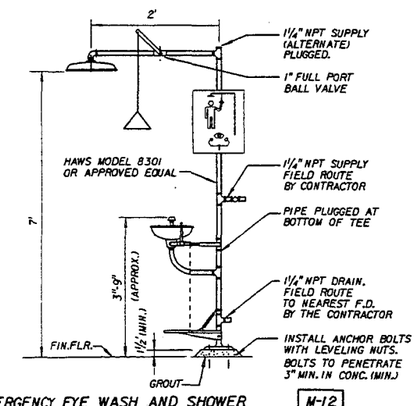

EMERGENCY EYE WASH AND SHOWER

N.T.S. M-12 VAR

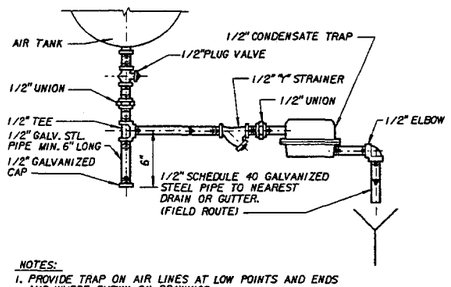

NOTES:

1. PROVIDE TRAP ON AIR LINES AT LOW POINTS AND ENDS AND WHERE SHOWN ON DRAWINGS.
2. FITTINGS SHALL BE 300 LB. SCREWED MALLEABLE IRON GALVANIZED, OR AS CALLED OUT.

CONDENSATE TRAP

N.T.S. M-14 VAR

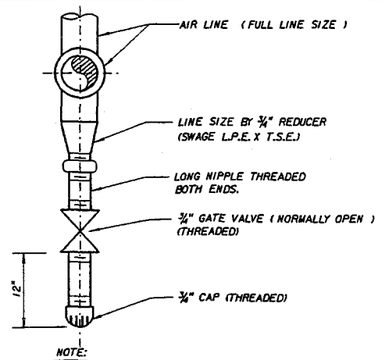

NOTE:

DETAIL ABOVE SHALL FOLLOW PIPE SPECIFICATION PER SYSTEM.

PLANT AND INSTRUMENT AIR LINE LOW POINT DIRT LEG

N.T.S. M-16 VAR

PP-16

MCDONNELL DOUGLAS CORPORATION - THIS INFORMATION IS SUBJECT TO DATA RIGHTS LEGENDS AT THE BEGINNING OF THE DOCUMENT.

MONTGOMERY WATSON
Pasadena, California

R.H. L.H. DASH NO	NO REQ	SIZE & DESCRIPTION OF MATERIAL			
SCALE, NONE	LIMITS ON DIM. UNLESS OTHERWISE NOTED. ANGULAR	FRAC. DEC.		SIGNATURE	DATE
			ENGR		
			DWN		
FAR NO. 292116	LOCATION 47A-1D-1-A1		CKD		
			APPVD		
			APPVD		

TITLE SOIL / GROUNDWATER REMEDIAL DESIGN
C-6 TORRANCE FACILITY
MECHANICAL DETAILS - III

DOUGLAS AIRCRAFT COMPANY
MCDONNELL DOUGLAS CORPORATION
FACILITIES

CI-701-4-111498

SHEET OF

BOE-C6-0061199

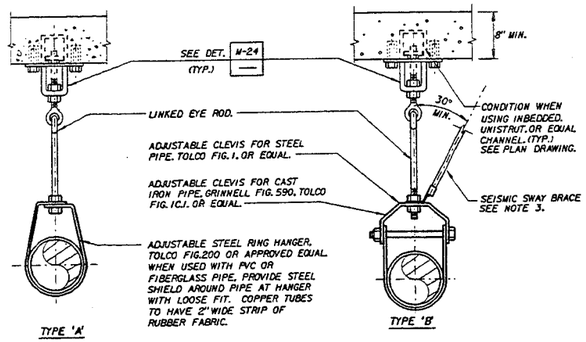

PIPE HANGER — M-20 / VAR

N.T.S.

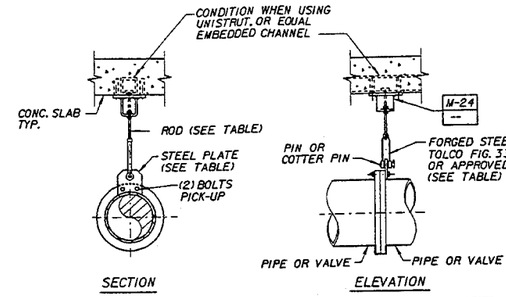

PIPE OR VALVE HANGER RODS		
PIPE OR VALVE DIA. (INCHES)	ROD DIA. (INCHES)	PLATE THICKNESS
4 THRU 8	5/8"	5/16"
10 THRU 14	3/4"	5/16"
16 THRU 24	1"	1/2"

NOTE:
ALL PARTS TO BE GALVANIZED AFTER FABRICATION

PIPE OR VALVE HANGER — M-22 / VAR

N.T.S.

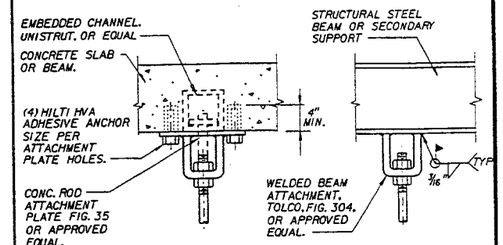

FIG. 1 — DETAIL FOR CONCRETE ATTACHMENT

FIG. 2 — DETAIL FOR STEEL BEAM ATTACHMENT

NOTE:
LENGTH OF SECONDARY BEAM SHALL BE 5'-0" MAX. & SIZES SHALL BE DETERMINED BY THE CONTRACTOR, PER FIELD CONDITION.

PIPE HANGER ATTACHMENT — M-24 / VAR

N.T.S.

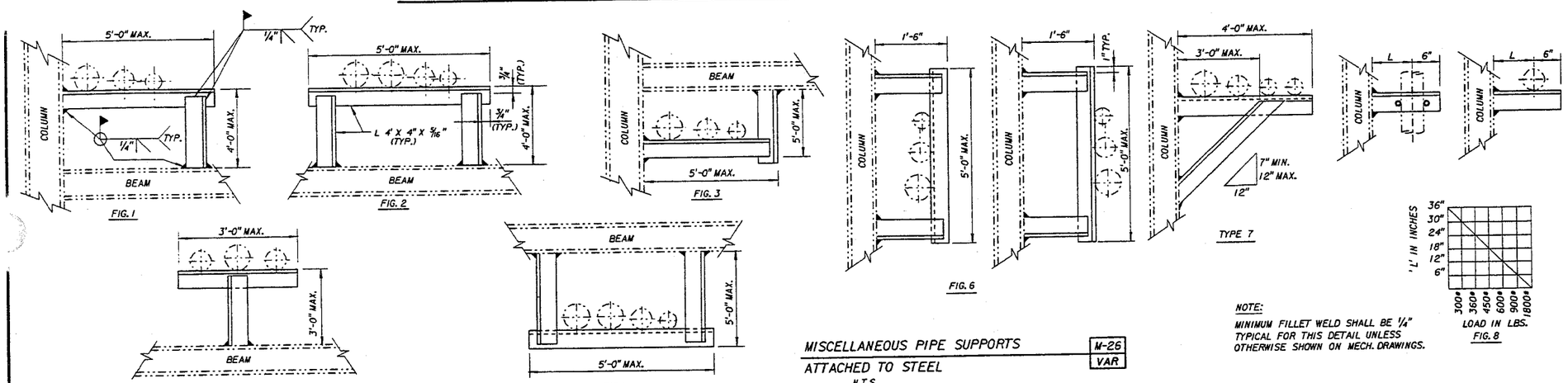

NOTE:
MINIMUM FILLET WELD SHALL BE 1/4" TYPICAL FOR THIS DETAIL UNLESS OTHERWISE SHOWN ON MECH. DRAWINGS.

MISCELLANEOUS PIPE SUPPORTS ATTACHED TO STEEL — M-26 / VAR

N.T.S.

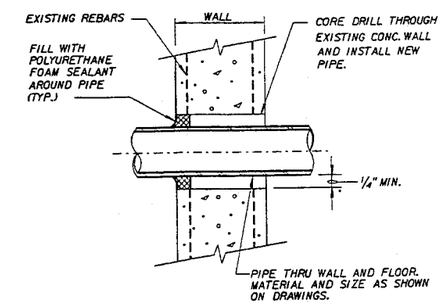

PIPE THROUGH EXISTING WALLS AND FLOORS — M-32 / VAR

N.T.S.

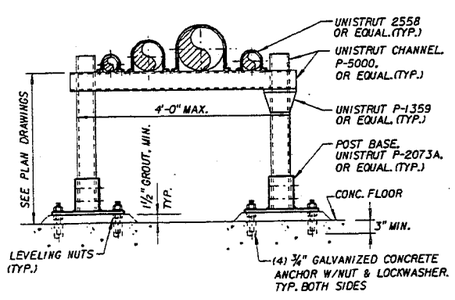

FIGURE 1

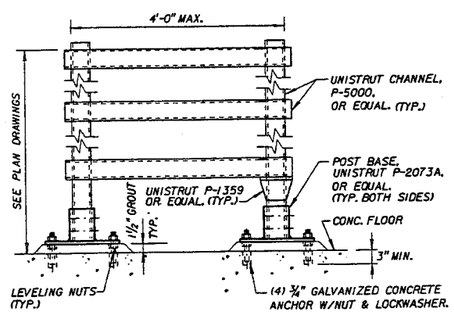

FIGURE 2

PIPE SUPPORTS — M-28 / VAR

N.T.S.

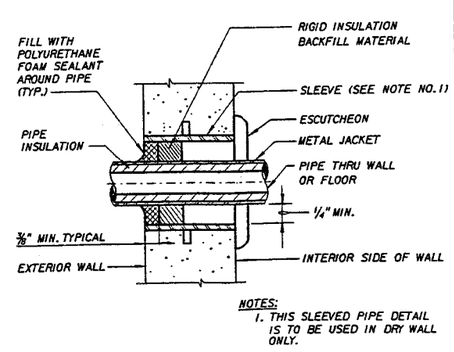

NOTES:
1. THIS SLEEVED PIPE DETAIL IS TO BE USED IN DRY WALL ONLY.
2. ELIMINATE SLEEVE IN CORE DRILLED WALLS.

PIPE SLEEVE FOR INSULATED PIPE THRU WALL - ABOVE GRADE — M-34 / VAR

N.T.S.

MCDONNELL DOUGLAS CORPORATION - THIS INFORMATION IS SUBJECT TO DATA RIGHTS LEGENDS AT THE BEGINNING OF THE DOCUMENT.

MONTGOMERY WATSON
Pasadena, California

PP-17

R.H. L.H.	NO REQ	SIZE & DESCRIPTION OF MATERIAL			
DASH NO				SIGNATURE	DATE
SCALE. NONE	LIMITS ON DIM. UNLESS OTHERWISE NOTED. ANGULAR	FRAC. DEC.	ENGR		
			DWN		
FAR NO. 292116	LOCATION 47A-1D-1-A1		CKD		
			APPVD		
			APPVD		

TITLE SOIL / GROUNDWATER REMEDIAL DESIGN
C-6 TORRANCE FACILITY
MECHANICAL DETAILS - 4

DOUGLAS AIRCRAFT COMPANY
MCDONNELL DOUGLAS CORPORATION
FACILITIES

CI-701-4-111498

SHEET OF

BOE-C6-0061200

EXTRACTION WELL SCHEDULE

WELL NO.	EXISTING OR NEW WELL	WELL MATERIAL AT SURFACE	WELL DIAMETER (INCH)	TOP OF CASING ELEV. (MSL-FT)	TOP OF BENTONITE SEAL (FT)	TOP OF FILTER PACK (FT)	TOP OF SCREEN (FT)	BOTTOM OF SCREEN AND WELL (FT)	LENGTH OF SCREEN INTERVAL (FT)	BOTTOM OF BOREHOLE (FT)	BOTTOM OF PUMP (FT)	ADDITIONAL SPECIFICATIONS
WCC-1S	EXISTING	SCH. 40 PVC	2	50.70	72	83.5	78.5	88.5	10	89.5	87	
WCC-3S	EXISTING	SCH. 40 PVC	4	51.19	57.5	64	69	89	30	89.5	87	
WCC-4S	EXISTING	SCH. 40 PVC	4	49.69	59.5	65	70.5	90.5	20	90.5	87	
WCC-5S	EXISTING	SCH. 40 PVC	4	48.22	51	58.5	61	91	30	91	87	
WCC-6S	EXISTING	SCH. 40 PVC	4	50.95	51	54	60	90	30	90	87	
WCC-7S	EXISTING	SCH. 40 PVC	4	48.29	49	54	60	90	30	90.5	87	
WCC-8S	EXISTING	SCH. 40 PVC	4	50.56	49.5	54	59.5	89.5	30	90	87	
WCC-9S	EXISTING	SCH. 40 PVC	4	47.01	53	55	60	90	30	90	87	
WCC-12S	EXISTING	UNKNOWN									87*	WELL INSTALLATION DETAILS UNKNOWN
WCC-1D	EXISTING	SCH. 40 PVC	4	50.45	110	115	120	140	20	140	135	
WCC-3D	EXISTING	SCH. 40 PVC	4	51.18	109	115	120	140	20	140	135	
RW-1	EXISTING	LC STEEL	4		5	9	10	85	75	86	82	
RW-2	NEW	LC STEEL	4		5	9	10	90	80	90	87	
RW-3	NEW	LC STEEL	4		5	9	10	100	90	100	97	

NOTES:

WELL SCREEN FOR NEW WELLS SHALL BE 4-INCH I.D. TYPE 304 STAINLESS STEEL WIRE-WRAPPED SCREEN, 0.010 SLOT.
FILTER PACK FOR NEW WELLS SHALL BE CLEAN SILICA SAND, LONESTAR MONTEREY GRADE 0/30 OR EQUIVALENT.
* PUMP DEPTH OF 87 FEET ASSUMES THAT THE DEPTH OF WELL WCC-12S IS NOMINALLY 90 FEET.
LC STEEL LOW-CARBON STEEL

MCDONNELL DOUGLAS CORPORATION - THIS INFORMATION IS SUBJECT TO DATA RIGHTS LEGENDS AT THE BEGINNING OF THE DOCUMENT.

MONTGOMERY WATSON
Pasadena, California

PP-18

R.H. L.H. DASH NO	NO REQ	SIZE & DESCRIPTION OF MATERIAL			
SCALE.	LIMITS ON DIM. UNLESS OTHERWISE NOTED. ANGULAR FRAC. DEC.			SIGNATURE	DATE
FAR NO. 292116	LOCATION 47A-ID-1-A1		ENGR		
			DWN		
			CKD		
			APPVD		
			APPVD		

TITLE SOIL / GROUNDWATER REMEDIAL DESIGN
C-6 TORRANCE FACILITY
PUMP WELL SCHEDULES

DOUGLAS AIRCRAFT COMPANY
MCDONNELL DOUGLAS CORPORATION
FACILITIES

CI-701-4-111498

SHEET OF

BOE-C6-0061201

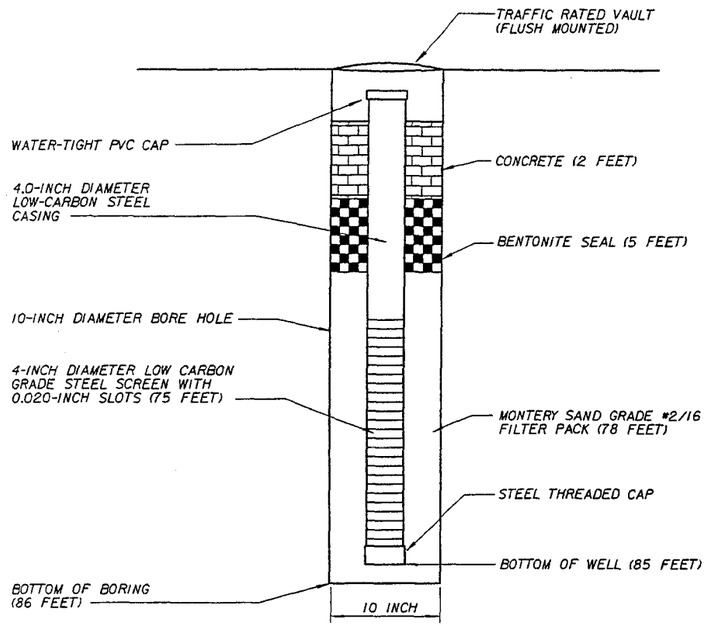

RECOVERY WELL RW-1 | A | VAR
NTS

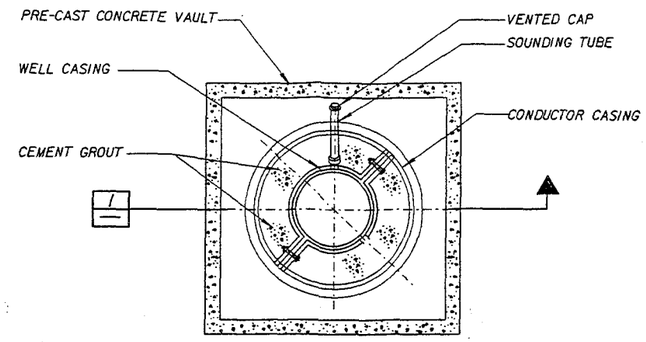

NOTE:
REFER TO WELL DETAIL ON DRAWING SHEET PP-13.

PLAN
NTS

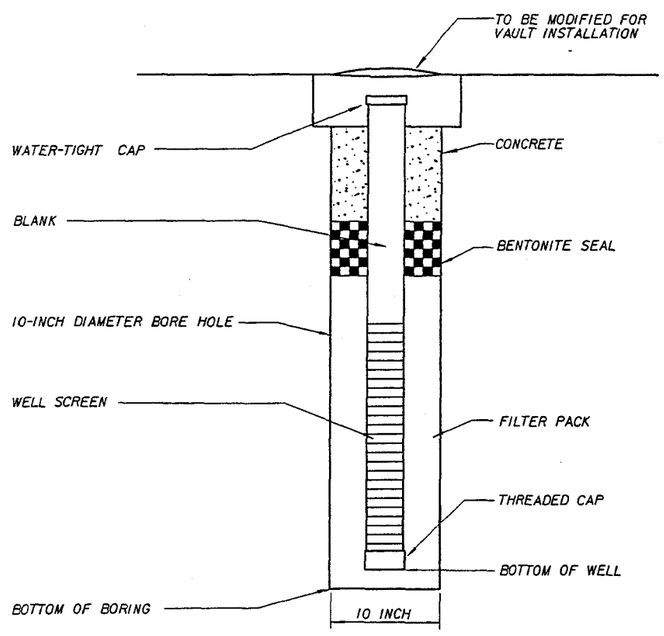

TYPICAL EXISTING WELL | B | VAR
NTS REFER TO PUMP WELL SCHEDULE ON DRAWING SHEET PP-18 FOR DIMENSIONS AND MATERIALS

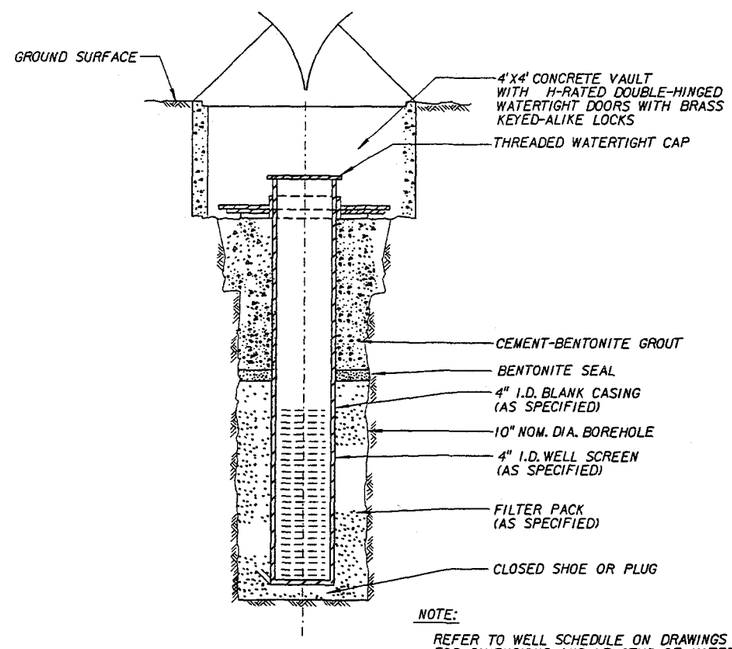

NOTE:
REFER TO WELL SCHEDULE ON DRAWINGS SHEET PP-18 FOR DIMENSIONS AND LENGTHS OF MATERIALS.

AS-PLANNED DIAGRAM NEW WELL | 1 | —
NTS

PP-19

R.H.	L.H.	NO	SIZE & DESCRIPTION OF MATERIAL
DASH NO		REQ	

SCALE.	LIMITS ON DIM. UNLESS OTHERWISE NOTED. ANGULAR	FRAC. DEC.		SIGNATURE	DATE
			ENGR		
			DWN		
FAR NO.	LOCATION		CKD		
292116	47A-1D-1-A1		APPVD		
			APPVD		

TITLE SOIL / GROUNDWATER REMEDIAL DESIGN
C-6 TORRANCE FACILITY
PUMP WELL DETAILS

DOUGLAS AIRCRAFT COMPANY
MCDONNELL DOUGLAS CORPORATION
FACILITIES

CI-701-4-111498
SHEET OF

MCDONNELL DOUGLAS CORPORATION - THIS INFORMATION IS SUBJECT TO DATA RIGHTS LEGENDS AT THE BEGINNING OF THE DOCUMENT.

MONTGOMERY WATSON
Pasadena, California

USER FILE No. 10937FTW/DOUGLAS/RECOVERY WELLS.DGN

BOE-C6-0061202

GENERAL INSTRUMENT OR FUNCTION SYMBOLS

	PRIMARY LOCATION (b)NORMALLY ACCESSIBLE TO OPERATOR	FIELD MOUNT	AUXILIARY LOCATION (b)NORMALLY ACCESSIBLE TO OPERATOR
DISCRETE INSTRUMENTS	XXX(a)		
SHARED DISPLAY, SHARED CONTROL			
COMPUTER FUNCTION			
PROGRAMMABLE LOGIC CONTROL			

(a) DESIGNATIONS SUCH AS 100 (LOCAL CONTROL BOARD NO. 100), 200 (LOCAL CONTROL BOARD NO.200), ETC., ARE USED WHEN NECESSARY TO SPECIFY INSTRUMENT OR FUNCTION LOCATION.

(b) NORMALLY INACCESSIBLE OR BEHIND-THE-PANEL DEVICES OR FUNCTIONS ARE DEPICTED BY USING THE SAME SYMBOLS BUT WITH DASHED HORIZONTAL BARS, I.E.

SINGLE INSTRUMENT OR OTHER COMPONENT HAVING MULTIPLE FUNCTIONS

(XXX) SOFTWARE OR LOGIC RESIDENT IN DISTRIBUTED CONTROL SYSTEM (DCS) AT PROGRAMMABLE LOGIC CONTROLLER (PLC) XXX. SEE ASSOCIATED LOGIC DIAGRAMS.

(XXX) DESIGNATIONS OF CONTROL FUNCTIONS ASSOCIATED INSTRUMENT OR OTHER COMPONENTS.

AHC - AUTO/HOLD/CLOSE
AM - AUTO/MANUAL
DEV - DEVIATION
HOA - HAND/OFF/AUTO
HOR - HAND/OFF/REMOTE
LOS - LOCKOUT STOP
LR - LOCAL/REMOTE
MOA - MANUAL/OFF/AUTO
OO - ON/OFF
OCA - OPEN/CLOSE/AUTO
OSC - OPEN/STOP/CLOSED
POT - POTENTIOMETER
RL - RAISE/LOWER
RSL - RAISE/STOP/LOWER
SD - SHUTDOWN
SEL - SELECT
SP - SET POINT
SR - START/RESET
SS - STOP/START

INSTRUMENT PANEL MOUNTED WITH COMPUTING OR CONVERTING FUNCTION

CONVERT

E - VOLTAGE
I - CURRENT
P - PNEUMATIC
A - ANALOG
B - BINARY
H - HYDRAULIC
O - ELECTROMAGNETIC, SONIC
R - RESISTANCE (ELECT.)
D - DIGITAL

COMPUTE

SUMMING
SUBTRACTOR
MUTIPLYING
DIVIDING
ROOT EXTRACTION
PROPORTIONAL
DERIVITIVE
AVERAGING
RATIO
DIFFERENCE
HIGH SELECTING
LOW SELECTING
INTEGRAL

(XXX) PANEL MOUNTED PILOT LIGHT WITH PANEL NUMBER DESIGNATION(i.e. XXX = 100, 200, ETC.).

IDENTIFICATION LETTERS

	FIRST-LETTER		SUCCEEDING-LETTERS		
	MEASURED OR INITIATING VARIABLE	MODIFIER	READOUT OR PASSIVE FUNCTION	OUTPUT FUNCTION	MODIFIER
A	ANALYSIS		ALARM		
B	BURNER, COMBUSTION				
C	CONDUCTIVITY			CONTROL	CLOSED
D	DENSITY	DIFFERENTIAL			
E	VOLTAGE		SENSOR (PRIMARY ELEMENT)		
F	FLOW RATE	RATIO (FRACTION)			
G	GAGE		GLASS, VIEWING DEVICE		
H	HAND				HIGH
I	CURRENT (ELECTRICAL)		INDICATE		
J	POWER	SCAN			
K	TIME, TIME SCHEDULE	TIME RATE OF CHANGE		CONTROL STATION	
L	LEVEL		LIGHT		LOW
M	MOTOR	MOMENTARY			MIDDLE, INTERMEDIATE
N	TORQUE		ISOLATE	ISOLATOR	
O			ORIFICE, RESTRICTION		OPEN
P	PRESSURE, VACUUM		POINT (TEST) CONNECTION		
Q	QUANTITY	INTEGRATE, TOTALIZE			
R	RADIATION		RECORD		
S	SPEED, FREQUENCY	SAFETY		SWITCH	
T	TEMPERATURE			TRANSMIT	
U	MULTIVARIABLE		MULTIFUNCTION	MULTIFUNCTION	MULTIFUNCTION
V	VIBRATION, MECHANICAL ANALYSIS			VALVE, DAMPER, LOUVER	
W	WEIGHT, FORCE		WELL		
X	INTRUSION	X AXIS			
Y	EVENT, STATE OR PRESENCE	Y AXIS		COMPUTE, CONVERT	
Z	POSITION, DIMENSION	Z AXIS		DRIVER, ACTUATOR, FINAL CONTROL ELEMENT	

SAMPLE LOOP DIAGRAM ISA EXPANDED FORMAT

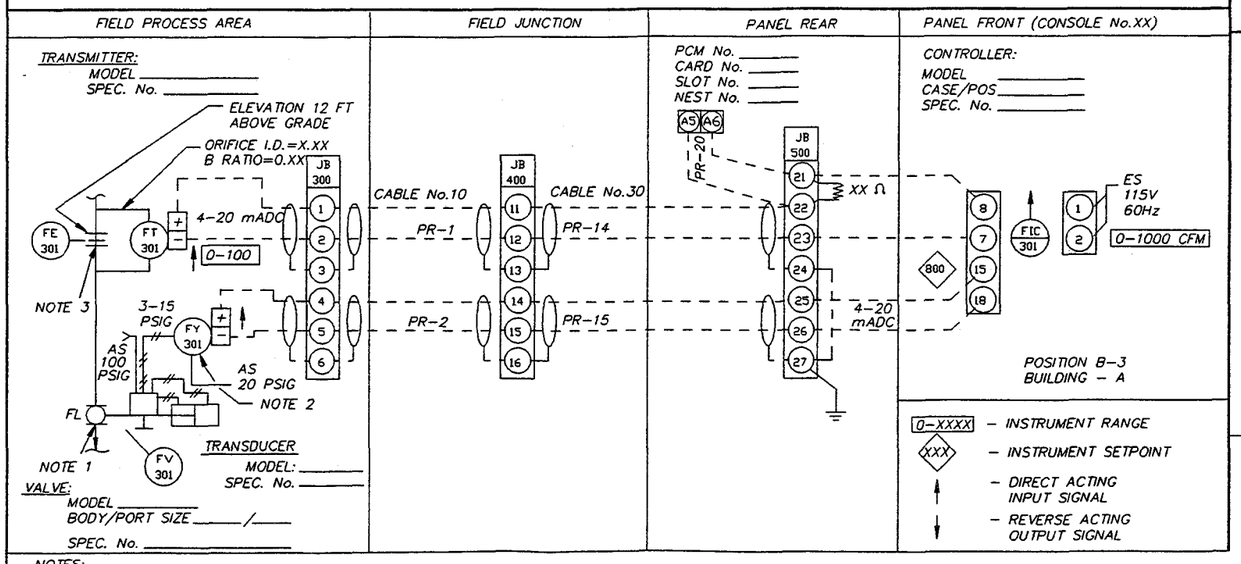

NOTES:
1. FV-301 FULLY OPEN AT 3 PSIG AND FULLY CLOSED AT 15 PSIG.
2. STAND MOUNT PER INSTRUMENT STANDARD XXXX NEAR, BUT NOT ON THE CONTROL VALVE.
3. FE-301 REQUIRES 10 PIPE DIAMETERS UPSTREAM AND 5 PIPE DIAMETERS DOWNSTREAM OF STRAIGHT PIPE.

INSTRUMENT LINE SYMBOLS

INSTRUMENT OR CONNECTION TO PROCESS (1)
PNEUMATIC SYMBOL (2)
ELECTRIC SYMBOL
HYDRAULIC SYMBOL
CAPILLARY TUBE
ELECTROMAGNETIC OR SONIC SIGNAL (3) (GUIDED)
ELECTROMAGNETIC OR SONIC SIGNAL (3) (NOT GUIDED)
INTERNAL SYSTEM LINK (SOFTWARE OR DATA LINK)
MECHANICAL LINK
PNEUMATIC BINARY SIGNAL
ELECTRIC BINARY SIGNAL - OR

(1) THE FOLLOWING ABBREVIATIONS ARE USED TO DENOTE THE TYPES OF POWER SUPPLIES. THEY MAY ALSO BE USED TO DENOTE PURGE FLUID SUPPLIES.

AS - AIR SUPPLY
IA - INSTRUMENT AIR
PA - PLANT AIR
ES - ELECTRIC SUPPLY
GS - GAS SUPPLY
HS - HYDRAULIC SUPPLY
NS - NITROGEN SUPPLY
SS - STEAM SUPPLY
WS - WATER SUPPLY

(2) THE PNEUMATIC SIGNAL SYMBOLS APPLIES TO A SIGNAL, NOT A SUPPLY SOURCE, USING ANY GAS AS A MEDIUM. IF A GAS OTHER THAN AIR IS USED, THE GAS IS IDENTIFIED BY A NOTE ON THE SIGNAL.

(3) ELECTROMAGNETIC PHENOMENA INCLUDE HEAT, RADIO WAVES, NUCLEAR RADIATION, AND LIGHT.

TAG NUMBERS

TYPICAL FORMAT

TIC-1 - INSTRUMENT IDENTIFICATION OR TAG NUMBER
TIC - FUNCTIONAL IDENTIFICATION
T - FIRST-LETTER
IC - SUCCEEDING-LETTER(S)
1 - LOOP NUMBER

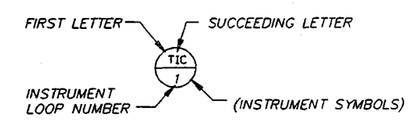

EXPANDED FORMAT

10-PAH-1A — TAG NUMBER
10 — OPTIONAL PREFIX
A — OPTIONAL SUFFIX

G-1

R.H.	L.H.	NO REQ	SIZE & DESCRIPTION OF MATERIAL
DASH NO			

SCALE. UNITS ON DIM. UNLESS OTHERWISE NOTED. ANGULAR FRAC. DEC.

	SIGNATURE	DATE
ENGR		
DWN		
CKD		
APPVD		
APPVD		

FAR NO. LOCATION

TITLE SOIL / GROUNDWATER REMEDIAL DESIGN
C-6 TORRANCE FACILITY
INSTRUMENTATION SYMBOLS AND ABBREVIATIONS-1

DOUGLAS AIRCRAFT COMPANY
MCDONNELL DOUGLAS CORPORATION
FACILITIES

SHEET OF

MCDONNELL DOUGLAS CORPORATION - THIS INFORMATION IS SUBJECT TO DATA RIGHTS LEGENDS AT THE BEGINNING OF THE DOCUMENT.

MONTGOMERY WATSON
Pasadena, California

SYMBOL

FUNCTION	DEFINITION
STATEMENT OF INPUT ALTERNATIVELY: STATEMENT OF INPUT INITIATING INSTRUMENT OR DEVICE NUMBER, IF KNOWN.	AN INPUT TO THE LOGIC SEQUENCE.
STATEMENT OF OUTPUT ALTERNATIVELY: STATEMENT OF OUTPUT OPERATED INSTRUMENT OR DEVICE NUMBER, IF KNOWN.	AN OUTPUT FROM THE LOGIC SEQUENCE.
A, B, C → A → D	AND GATE: LOGIC OUTPUT "D" EXISTS IF AND ONLY IF ALL LOGIC INPUTS "A", "B" AND "C" EXIST.
A, B, C → OR → D	OR GATE: LOGIC OUTPUT "D" EXISTS IF AND ONLY IF ONE OR MORE LOGIC INPUTS "A", "B" AND "C" EXIST.
A → DI t → B	DELAY INITIATION OF OUTPUT: THE CONTINUOUS EXISTENCE OF LOGIC INPUT "A" FOR TIME "t" CAUSES LOGIC OUTPUT "B" TO EXIST. WHEN "t" EXPIRES "B" TERMINATES WHEN "A" TERMINATES.
A → DT t → B	DELAY TERMINATION OF OUTPUT: THE EXISTENCE OF LOGIC INPUT "A" CAUSES LOGIC OUTPUT "B" TO EXIST IMMEDIATELY. "B" TERMINATES WHEN "A" HAS TERMINATED AND HAS NOT AGAIN EXISTED FOR TIME "t".
A → PD t → B	PULSE OUTPUT: THE EXISTENCE OF LOGIC INPUT "A", REGARDLESS OF ITS SUBSEQUENT STATE, CAUSES LOGIC OUTPUT "B" TO EXIST IMMEDIATELY. "B" EXISTS FOR TIME "t" AND THEN TERMINATES.
A, B, C → * → D *INTERNAL DETAILS REPRESENT NUMERICAL QUANTITIES	QUALIFIED OR GATE: LOGIC OUTPUT "D" EXISTS IF AND ONLY IF A SPECIFIC NUMBER OF LOGIC INPUTS "A", "B", AND "C" EXISTS.
A → ○ → B THE NOT SYMBOL MAY BE DRAWN TANGENT TO AN ADJACENT LOGIC SYMBOL.	NOT GATE: LOGIC "B" EXISTS IF AND ONLY IF LOGIC INPUT "A" DOES NOT EXIST.
A, B → S, R → C, D * *OUTPUT D SHALL NOT BE SHOWN IF IT IS NOT USED.	FLIP-FLOP (LATCH): LOGIC OUTPUT "C" EXISTS AS SOON AS LOGIC INPUT "A" EXISTS. "C" CONTINUES TO EXIST REGARDLESS OF THE SUBSEQUENT STATE OF "A" UNTIL RESET BY THE EXISTENCE OF LOGIC INPUT "B". LOGIC OUTPUT "D", IF USED, EXISTS WHEN "C" DOES NOT EXIST. "D" DOES NOT EXIST WHEN "C" EXISTS.
A, B → MS, R → C, D	MAINTAINED FLIP-FLOP: SIMILAR TO DEFINITION OF FLIP-FLOP EXCEPT THAT THE MEMORY SHALL BE MAINTAINED IN THE EVENT OF LOGIC POWER LOSS.

FLOW

FT ORIFICE PLATE WITH VENA CONTRACTA, RADIUS, OR PIPE TAPS CONNECTED TO DIFFERENTIAL-PRESSURE-TYPE FLOW TRANSMITTER	FE TURBINE-OR PROPELLER TYPE PRIMARY ELEMENT
FE VENTURI TUBE	FE SINGLE PORT PITOT TUBE OR PITOT-VENTURI TUBE
FE FLUME	FE WEIR
FQI POSITIVE-DISPLACEMENT-TYPE FLOW TOTALIZING INDICATOR	FI VARIABLE AREA FLOW INDICATOR (ROTAMETER)
FE, M MAGNETIC FLOWMETER	FE SONIC FLOWMETER "DOPPLER" OR "TRANSIT TIME" MAY BE ADDED
FE VORTEX SENSOR	FE PADDLE WHEEL

POSITION

ZSC LIMIT SWITCH THAT IS ACTUATED WHEN VALVE IS CLOSED TO A PRE-DETERMINED POSITION	ZT POSITION TRANSMITTER

LEVEL

TANK, LG GAGE GLASS, EXTERNALLY CONNECTED	TANK, LT LEVEL TRANSMITTER, DIFFERENTIAL-PRESSURE TYPE, MOUNTED ON TANK
TANK, LT LEVEL TRANSMITTER WITH ONE CONNECTION	TANK, LIT LEVEL TRANSMITTER WITH INTEGRAL INDICATION
LS, TANK LEVEL SWITCH, PADDLE WHEEL OR LEVER TYPE, TO MEASURE LEVEL OF SOLIDS	LT LEVEL TRANSMITTER FLOAT TYPE
LT CAPACITANCE OR DIELECTRIC TYPE LEVEL ELEMENT CONNECTED TO LEVEL TRANSMITTER (TAG LEVEL ELEMENT LE)	LX, LT RADIOACTIVE OR SONIC TYPE LEVEL TRANSMITTER WITH INTEGRAL SENSOR

WEIGHT

TANK, WT WEIGHT TRANSMITTER, DIRECT-CONNECTED	WT, CONVEYOR WEIGH-BELT SCALE TRANSMITTER
TANK, WT STRAIN GAGE CONNECTED TO SEPARATE WEIGHT TRANSMITTER (TAG STRAIN GAGE WE)	

TEMPERATURE

TE TEMPERATURE ELEMENT WITH WELL (ELEMENT NOT CONNECTED TO SECONDARY INSTRUMENT)	TT FILLED-SYSTEM-TYPE TEMPERATURE TRANSMITTER WITH WELL
TI BIMETALLIC-TYPE THERMOMETER, GLASS THERMOMETER, OR OTHER LOCAL UNCLASSIFIED TEMPERATURE INDICATOR	RTD (IF APPLICABLE), TT THERMOCOUPLE, RESISTANCE BULB (RTD) OR THERMISTOR (TH) CONNECTED TO TEMPERATURE TRANSMITTER

PRESSURE OR VACUUM

PI WITH PRESSURE LEAD LINE	PI LINE - MOUNTED
PRESSURE INDICATOR CONNECTED TO DIAPHRAGM SEAL WITH FILLED SYSTEM	
PIT PRESSURE ELEMENT STRAIN-GAGE TYPE, CONNECTED TO PRESSURE INDICATING TRANSMITTER	PI PRESSURE INDICATOR, DIRECT - CONNECTED

ANALYTICAL

AIT, XXXX
ANALYSIS INDICATING TRANSMITTER

XXXX =
- ALK - ALKALINITY
- CL2 - CHLORINE CONCENTRATION
- COMB - COMBUSTABLE GAS
- CON - CONDUCTIVITY
- DO - DISSOLVED OXYGEN
- H2S - HYDROGEN SULFIDE
- LEL - LOWER EXPLOSIVE LIMIT
- O2 - OXYGEN CONCENTRATION
- O3 - OZONE
- ORP - OXIDATION/REDUCTION POTENTIAL
- PH - HYDROGEN ION CONCENTRATION
- SO2 - SULFUR DIOXIDE
- TH - TOTAL HARDNESS
- TURB - TURBIDITY
- UV - ULTRA VIOLET

G-2

R.H. L.H.	NO REQ	SIZE & DESCRIPTION OF MATERIAL
DASH NO		

SCALE	LIMITS ON DIM. UNLESS OTHERWISE NOTED. ANGULAR	FRAC. DEC.		SIGNATURE	DATE
FAR NO.		LOCATION	ENGR. DWN. CKD APPVD APPVD		

MCDONNELL DOUGLAS CORPORATION - THIS INFORMATION IS SUBJECT TO DATA RIGHTS LEGENDS AT THE BEGINNING OF THE DOCUMENT.

MONTGOMERY WATSON
Pasadena, California

TITLE SOIL / GROUNDWATER REMEDIAL DESIGN
C-6 TORRANCE FACILITY
INSTRUMENTATION SYMBOLS AND ABBREVIATIONS-2

DOUGLAS AIRCRAFT COMPANY
MCDONNELL DOUGLAS CORPORATION
FACILITIES

SHEET OF

BOE-C6-0061204

VALVE SYMBOLS

BUTTERFLY	GLOBE	ROTARY VALVE	ANGLE
SWING CHECK VALVE	BALL CHECK VALVE	GATE VALVE	PLUG VALVE
BALL VALVE	VACUUM RELIEF VALVE (PSV)	PRESSURE RELIEF OR SAFETY VALVE (PSV)	SOLENOID VALVE (S)
BACKPRESSURE REGULATOR (PCV)	BACKFLOW PREVENTOR	PRESSURE-REDUCING REGULATOR (PCV)	LEVEL CONTROL VALVE WITH MECHANICAL LINKAGE (LCV)
(UPSTREAM ALTERNATIVE) (FI) (DOWNSTREAM ALTERNATIVE) INDICATING VARIABLE AREA METER WITH INTEGRAL MANUAL THROTTLE VALVE		NEEDLE VALVE	DIAPHRAM OR PINCH VALVE

VALVE ACTUATORS

SOLENOID (S)	PREFERED FOR DIAPHRAGM ASSEMBLED WITH PILOT. ONE INPUT SHOWN (TYPICALLY WITH ELECTRIC INPUT)	DIAPHRAGM PRESSURE-BALANCED	ELECTROHYDRAULIC
DIGITAL (D)	ROTARY MOTOR (SHOWN TYPICALLY WITH ELECTRIC SIGNAL. MAY BE HYDRAULIC OR PNEUMATIC) (M)	VALVE ACTUATOR WITH ATTACHED ELECTRO-PNEUMATIC CONVERTER (TY)	WITH OR WITHOUT POSITIONER OR OTHER PILOT

PUMP AND COMPRESSOR SYMBOLS

- CENTRIFUGAL PUMP
- PROGRESSIVE CAVITY PUMP
- CENTRIFUGAL WET PIT PUMP OR TURBINE PUMP
- SUBMERSIBLE SUMP PUMP OR SAMPLE PUMP
- CHEMICAL FEED PUMP
- COMPRESSOR (CENTRIFUGAL), OR TURBINE MOTOR
- DIAPHRAGM PUMP
- COMPRESSOR (PISTON)
- GEAR PUMP OR BLOWER (POSITIVE DISPLACMENT)
- EJECTOR
- PISTON PUMP
- BLOWER(CENTRIFUGAL)
- SCREW PUMP

MECHANICAL EQUIPMENT CALLOUT

AREA (LOCATION) DESIGNATION — EQUIPMENT NUMBER

T-BV-20

EQUIPMENT ABBREVIATION (BUTTERFLY VALVE)

MISCELLANEOUS SYMBOLS

- DIAPHRAGM SEAL
- ANNULAR DIAPHRAGM SEAL
- BLIND FLANGE
- MIXER
- AIR GAP
- ELECTRIC MOTOR
- VENT TO ATMOSPHERE
- RADIO ANTENNA
- DRAIN
- PIPE MATERIAL CHANGE
- HORN
- SAMPLE TAP
- FILTER
- RUPTURE DISK
- EXPANSION TANK

FLOW STREAM IDENTIFICATION

LEGEND	SERVICE	LEGEND	SERVICE
A	AERATION	NG	NATURAL GAS
AA	AQUEOUS AMMONIA	OF	OVERFLOW
AC	ACTIVATED CARBON	OG	OFF-GAS
AW	FILTER AIR WASH	OTE	OXIDATION TOWER EFFLUENT
BD	BOTTOM DRAIN	OW	OZONATED WATER
BP	BYPASS	OX	OXYGEN
BW	FILTER BACKWASH	OZ	OZONE
C	CONDENSATE	PA	PLANT AIR
CAW	CHANNEL AGITATION WATER	PD	PLANT DRAIN
CD	CHEMICAL DRAIN AND VENT	PEA	POLYMER – ANIONIC
CHE	CHLORINATED EFFLUENT	PEC	POLYMER – CATIONIC
CL	CHLORINE (GAS OR LIQUID STATE)	PEF	PRIMARY EFFLUENT
CLS	CHLORINE SOLUTION	PEN	POLYMER – NONIONIC
CLV	CHLORINE GAS UNDER VACUUM	PI	PLANT INFLUENT
CN	CENTRATE	PO	PLANT OVERFLOW
CS	CAUSTIC SODA	PW	POTABLE WATER
CSL	CONDITIONED SLUDGE	RAS	RETURN ACTIVATED SLUDGE
CV	CHLORINATOR VENT & DETECTION LINE	RC	RECYCLE COOLANT
DCS	DEFOAMING CHEMICAL SOLUTION	REW	RECLAIMED WATER
DN	DECANT	RSL	RAW SLUDGE
DSL	DIGESTED SLUDGE	RW	RAW WATER
ET	ELECTROLYTE	RWL	RAINWATER LEADER
EW	ELUTRIATION WATER	S	SCUM
EWR	ENGINE COOLING WATER RETURN	SA	SAMPLE LINE
EWS	ENGINE COOLING WATER SUPPLY	SC	SPARE CHEMICAL
F	FROTH	SCS	SCRUBBER CHEMICAL SUPPLY
FA	FOUL AIR	SD	SANITARY DRAIN & VENT
FE	FINAL EFFLUENT	SDR	STORM DRAIN
FLW	FLOCCULATED WATER	SE	SECONDARY EFFLUENT
FM	FORCE MAIN	SF	SLUDGE FILTRATE
FOR	FUEL OIL RETURN	SI	SODIUM SILICATE
FOS	FUEL OIL SUPPLY	SN	SUPERNATANT
FS	FROTH SPRAY	SO	SULFUR DIOXIDE (GAS OR LIQUID STATE)
FSP	FIRE PROTECTION SPRINKLER SYSTEM	SOA	SULFURIC ACID
FSW	FILTER SURFACE WASHWATER	SOS	SULFUR DIOXIDE SOLUTION
FTW	FILTER TO WASTE	SOV	SULFUR DIOXIDE GAS UNDER VACUUM
FW	FILTERED WATER	SPD	SUMP PUMP DISCHARGE
G	GRIT	SS	SANITARY SEWER
H	HYPOCHLORITE	ST	STEAM (LOW PRESSURE TO 10 PSI)
HF	HYDROFLUOSILICIC ACID	SU	STRUCTURE UNDERDRAIN
HP	HYDROGEN PEROXIDE	SUC	STRUCTURE UNDERDRAIN COLLECTOR
HR	HEATING WATER RETURN	SW	SETTLED WATER
HS	HEATING WATER SUPPLY	SWR	SCRUBBER WATER RETURN
HWR	DOMESTIC HOT WATER RETURN	TPR	THICKENER PRESSURIZED RECYCLE
HWS	DOMESTIC HOT WATER SUPPLY	TS	THICKENER SUPERNATANT
IA	INSTRUMENT AIR	TSL	THICKENED SLUDGE
IE	INTERMEDIATE EFFLUENT	TSO	THICKENER SUBNATANT OVERFLOW
ISL	INTERMEDIATE SLUDGE	UW	UTILITY WATER (NON-POTABLE WATER)
LO	LUBE OIL	V	VACUUM
LPG	LIQUEFIED PETROLEUM GAS	WAS	WASTE ACTIVATED SLUDGE
LS	LIME SLURRY	WLO	WASTE LUBE OIL
LSP	LANDSCAPING SPRINKLER SYSTEM	WW	WASTE WATER
MA	MURIATIC ACID	WWR	WASTE WATER RECLAIMED
ML	MIXED LIQUOR	WWW	WASTE WASHWATER

NOTES

1. ADDITIONAL INSTRUMENTATION AND CONTROL SYMBOLS MAY BE USED AS REQUIRED. SYMBOLS AND NOMENCLATURE ARE BASED ON ISA STANDARDS S5.1, S5.2, S5.4.
2. SEE ASSOCIATED ELECTRICAL AND MECHANICAL SYMBOL SHEETS FOR ADDITIONAL SYMBOLS AND ABBREVIATIONS.
3. FOR PIPE SIZES, MATERIAL, AS WELL AS DETAILS OF METER COUPLING AND OTHER MECHANICAL EQUIPMENT (E.G. VALVE, PUMP ETC.) SEE PROCESS AND INSTRUMENTATION DIAGRAMS, MECHANICAL DRAWINGS AND SPECIFICATIONS.
4. POWER SUPPLIES FOR LOOPS OR SYSTEMS SHALL BE FURNISHED BY THE INSTRUMENTATION MANUFACTURER TO MEET THE PARTICULAR CHARACTERISTICS (E.G. VOLTAGE AND CURRENT REQUIREMENTS) OF COMPONENTS IN EACH LOOP OR SYSTEM.

G-3

MCDONNELL DOUGLAS CORPORATION – THIS INFORMATION IS SUBJECT TO DATA RIGHTS LEGENDS AT THE BEGINNING OF THE DOCUMENT.

R.H.	L.H.	NO REQ	SIZE & DESCRIPTION OF MATERIAL
DASH NO			

SCALE. LIMITS ON DIM. UNLESS OTHERWISE NOTED. FRAC. DEC. ANGULAR

FAR NO. LOCATION

	SIGNATURE	DATE
ENGR		
DWN		
CKD		
APPVD		
APPVD		

TITLE SOIL / GROUNDWATER REMEDIAL DESIGN
C-6 TORRANCE FACILITY
INSTRUMENTATION SYMBOLS AND ABBREVIATIONS-3

DOUGLAS AIRCRAFT COMPANY
MCDONNELL DOUGLAS CORPORATION
FACILITIES

SHEET OF

MONTGOMERY WATSON
Pasadena, California

4/18/94 FILE No. H:\PRJ\DOUGLAS\WWTP\C-6\ JF 70.0085 BOE-C6-0061205

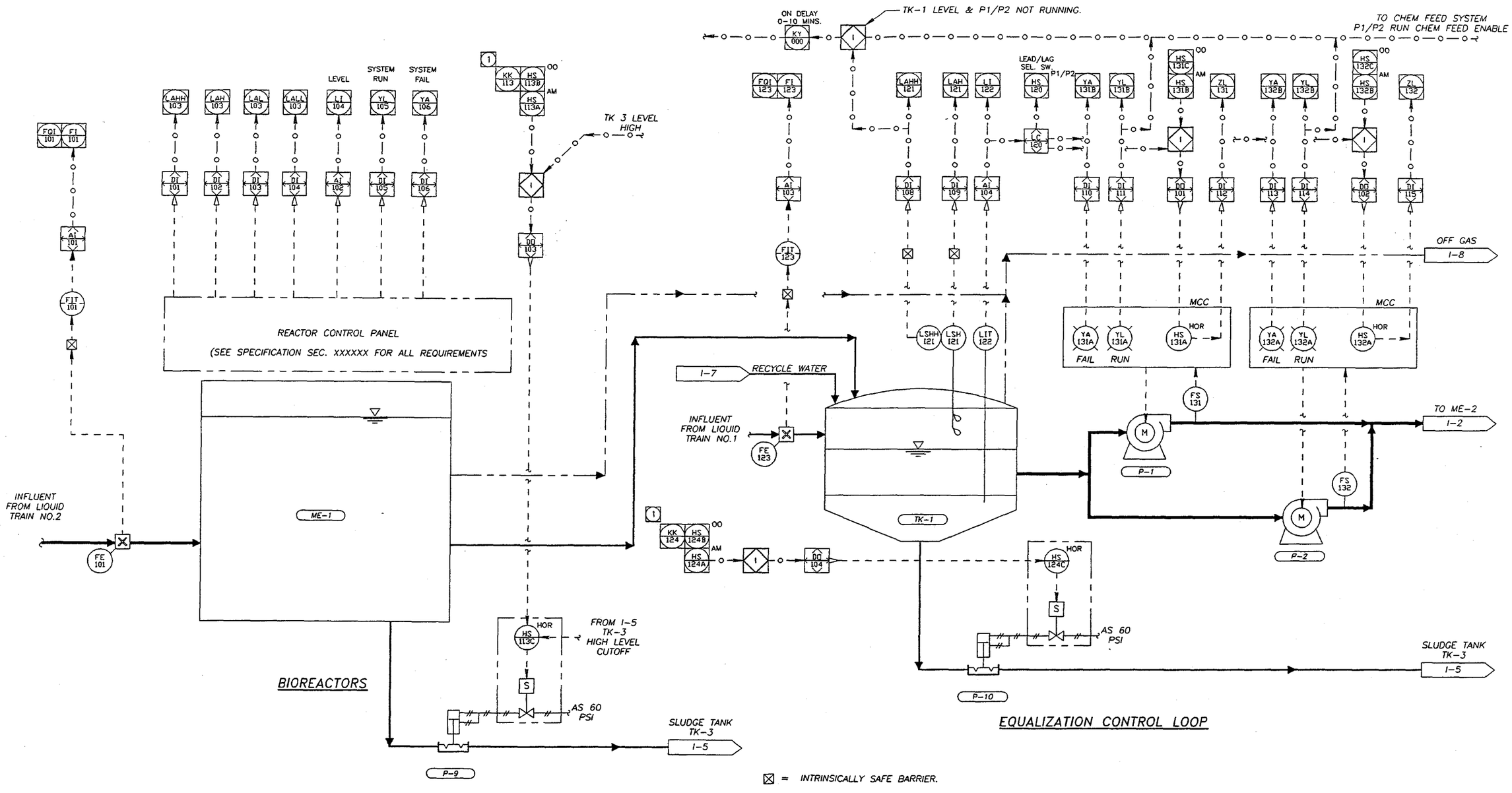

NOTE

(1) ADJUSTABLE TIME CYCLE TIMER, 0-24HRS PERIOD WITH ADJUSTABLE ONTIME, 0-60 MIN.

MCDONNELL DOUGLAS CORPORATION - THIS INFORMATION IS SUBJECT TO DATA RIGHTS LEGENDS AT THE BEGINNING OF THE DOCUMENT.

MONTGOMERY WATSON
Pasadena, California

I-1

R.H. L.H. DASH NO	NO REQ	SIZE & DESCRIPTION OF MATERIAL			
SCALE.	LIMITS ON DIM. UNLESS OTHERWISE NOTED. FRAC. DEC. ANGULAR			SIGNATURE	DATE.
			ENGR		
			DWN		
FAR NO.		LOCATION	CKD		
			APPVD		
			APPVD		

TITLE SOIL / GROUNDWATER REMEDIAL DESIGN
C-6 TORRANCE FACILITY
LOOP DIAGRAM - 1, INFLUENT & EQUALIZATION

DOUGLAS AIRCRAFT COMPANY
MCDONNELL DOUGLAS CORPORATION
FACILITIES

SHEET OF

TITLE NO.

BOE-C6-0061206

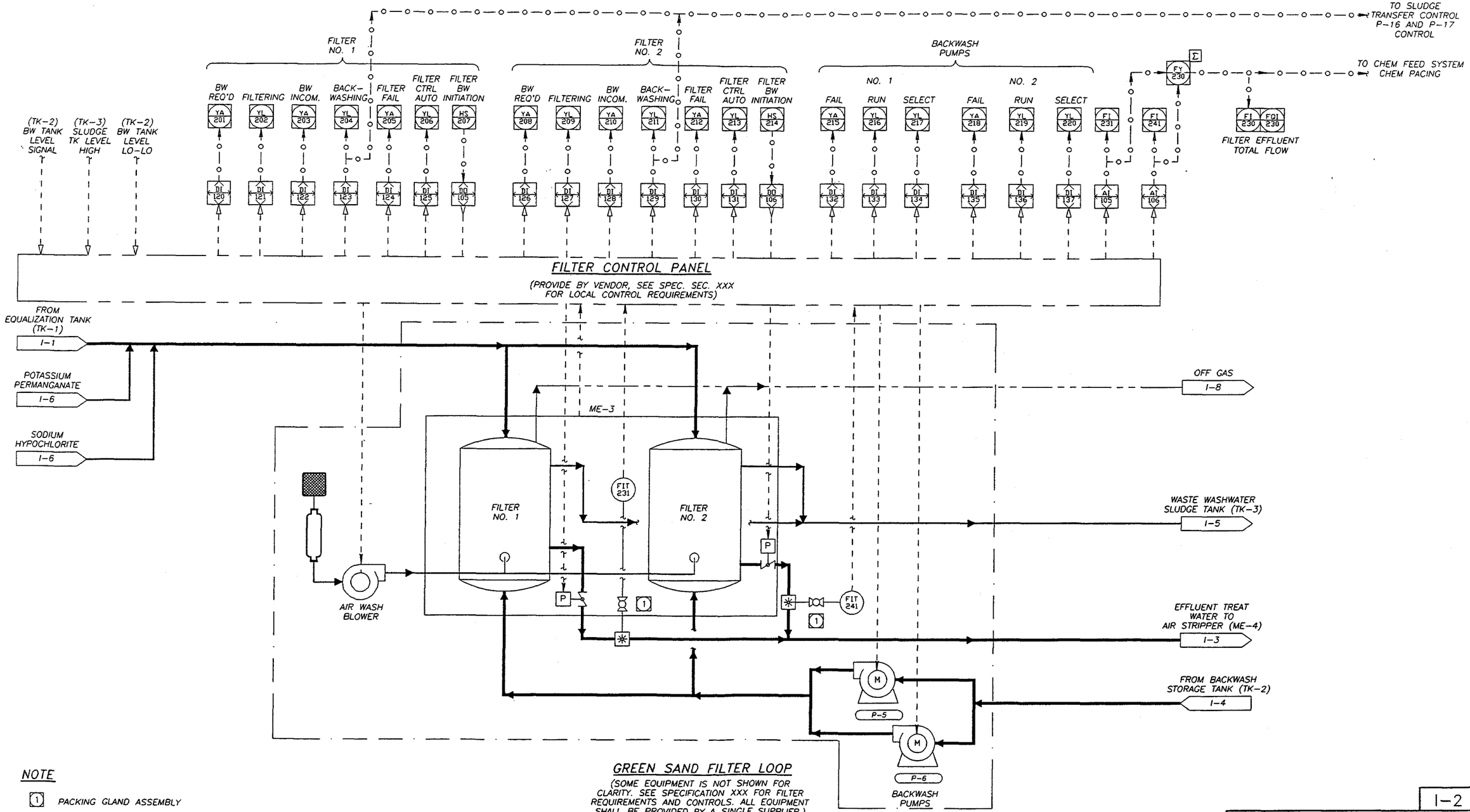

NOTE

(1) PACKING GLAND ASSEMBLY

1-2

R.H. L.H. DASH NO	NO REQ	SIZE & DESCRIPTION OF MATERIAL		
SCALE.	LIMITS ON DIM. UNLESS OTHERWISE NOTED. FRAC. DEC. ANGULAR		SIGNATURE	DATE
		ENGR		
		DWN		
FAR NO.	LOCATION	CKD		
		APPVD		
		APPVD		

TITLE SOIL / GROUNDWATER REMEDIAL DESIGN
C-6 TORRANCE FACILITY
LOOP DIAGRAM - 2, FILTERS

DOUGLAS AIRCRAFT COMPANY
MCDONNELL DOUGLAS CORPORATION
FACILITIES

SHEET OF

MCDONNELL DOUGLAS CORPORATION - THIS INFORMATION IS SUBJECT TO DATA RIGHTS LEGENDS AT THE BEGINNING OF THE DOCUMENT.

MONTGOMERY WATSON
Pasadena, California

ZO.0085 FILE No. H:\PRA\DOUGLAS\INS\C-6\DA110228 4/18/94
BOE-C6-0061207

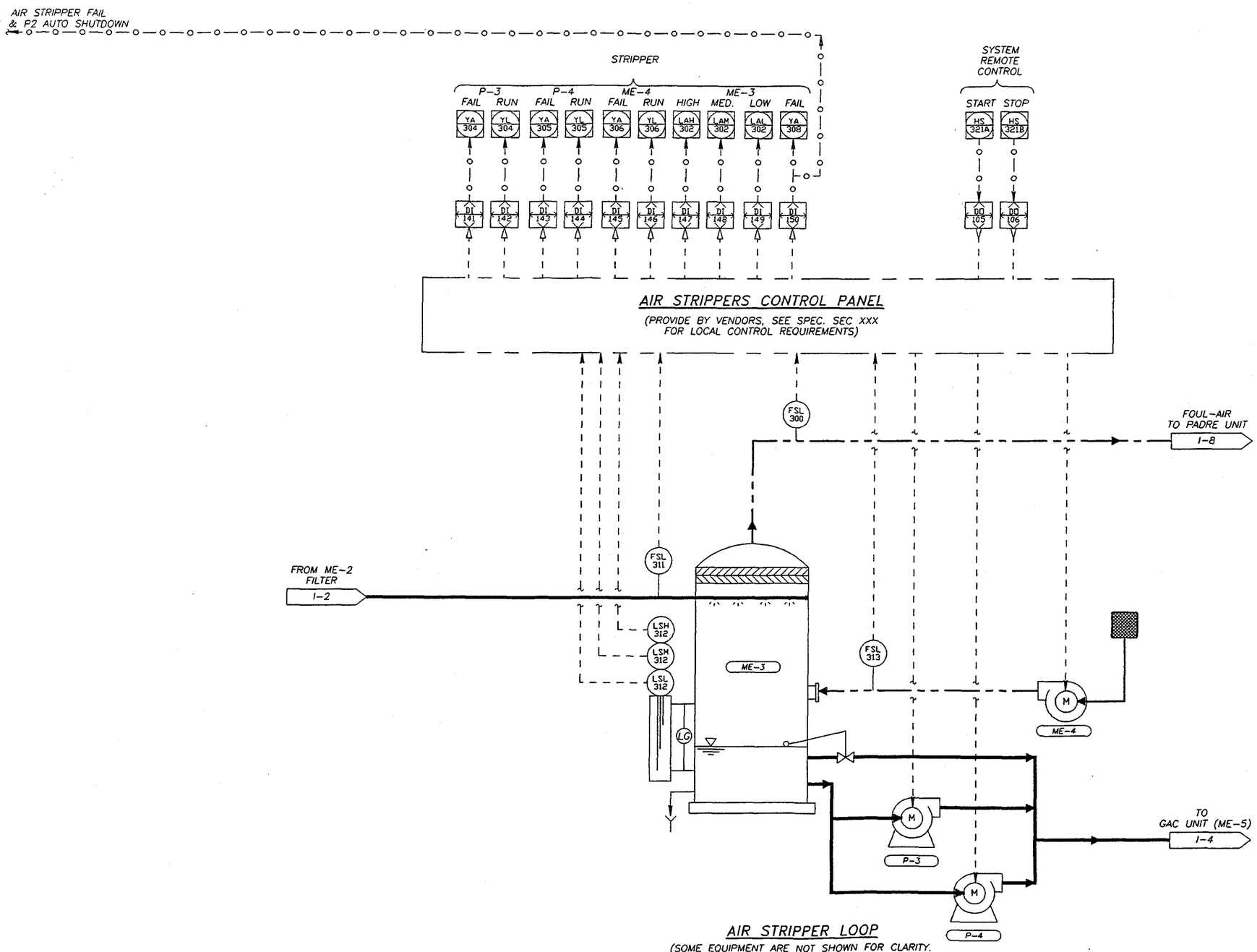

AIR STRIPPER LOOP

(SOME EQUIPMENT ARE NOT SHOWN FOR CLARITY.
SEE SPECIFICATION XXX FOR REQUIREMENTS
FILTERS, CONTROL AND RELATED EQUIPMENT SHALL
BE PROVIDED BY A SINGLE MANUFACTURE)

MCDONNELL DOUGLAS CORPORATION – THIS INFORMATION IS SUBJECT TO DATA RIGHTS LEGENDS AT THE BEGINNING OF THE DOCUMENT.

MONTGOMERY WATSON
Pasadena, California

1-3

R.H. L.H. DASH NO	NO REQ	SIZE & DESCRIPTION OF MATERIAL			
SCALE.	LIMITS ON DIM. UNLESS OTHERWISE NOTED. FRAC. DEC. ANGULAR			SIGNATURE	DATE
			ENGR		
			DWN		
FAR NO.	LOCATION		CKD		
			APPVD		
			APPVD		

TITLE SOIL / GROUNDWATER REMEDIAL DESIGN
C-6 TORRANCE FACILITY
LOOP DIAGRAM – 3, AIR STRIPPER

DOUGLAS AIRCRAFT COMPANY
MCDONNELL DOUGLAS CORPORATION
FACILITIES

SHEET OF

BOE-C6-0061208

NOTE

1 PACKING GLAND ASSEMBLY.

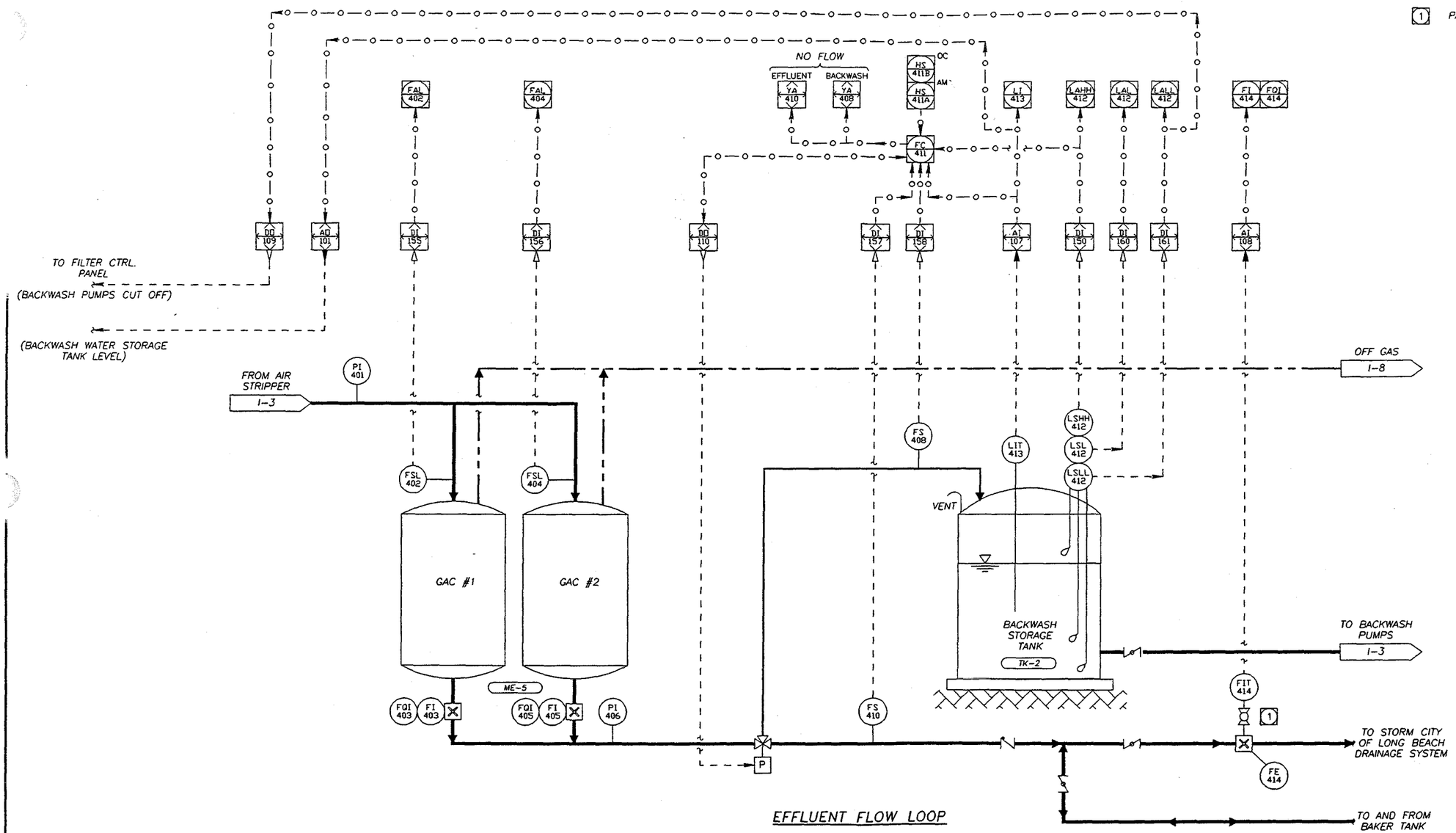

EFFLUENT FLOW LOOP

1-4

R.H. L.H.	NO REQ	SIZE & DESCRIPTION OF MATERIAL			
DASH NO					
SCALE.	UNITS ON DIM. UNLESS OTHERWISE NOTED. ANGULAR	FRAC. DEC.		SIGNATURE	DATE
			ENGR		
			DWN		
FAR NO.		LOCATION	CKD		
			APPVD		
			APPVD		

TITLE SOIL / GROUNDWATER REMEDIAL DESIGN
C-6 TORRANCE FACILITY
LOOP DIAGRAM - 4, EFFLUENT & FLOW CONTROL

DOUGLAS AIRCRAFT COMPANY
MCDONNELL DOUGLAS CORPORATION
FACILITIES

SHEET OF

MCDONNELL DOUGLAS CORPORATION - THIS INFORMATION IS SUBJECT TO DATA RIGHTS LEGENDS AT THE BEGINNING OF THE DOCUMENT.

MONTGOMERY WATSON
Pasadena, California

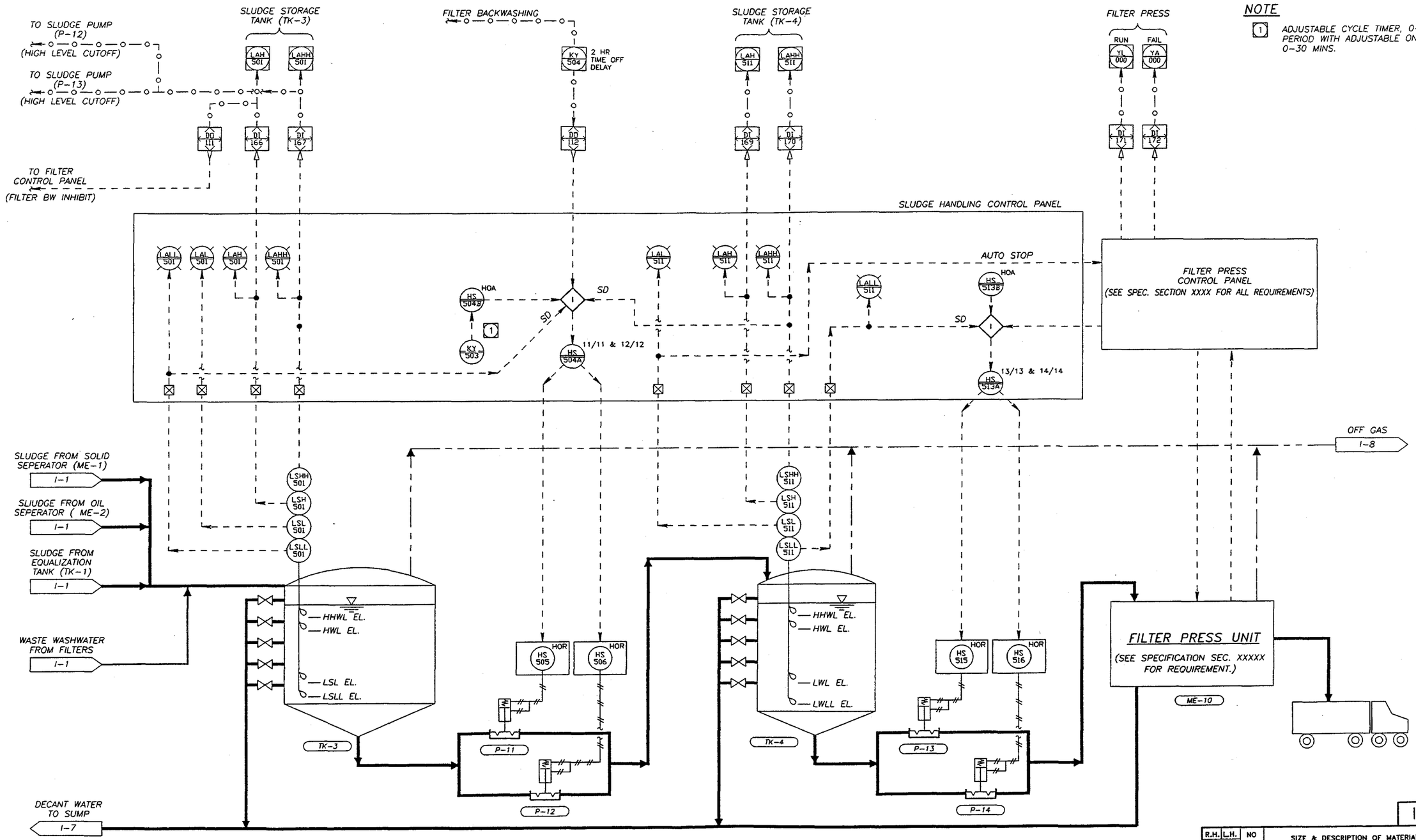

NOTE

1. ADJUSTABLE CYCLE TIMER, 0-6 HR PERIOD WITH ADJUSTABLE ON TIME, 0-30 MINS.

1-5

SOLID/WASTE THICKEN AND FILTER PRESS LOOP

R.H.	L.H.	NO REQ	SIZE & DESCRIPTION OF MATERIAL
DASH NO			

SCALE. LIMITS ON DIM. UNLESS OTHERWISE NOTED. FRAC. DEC. ANGULAR

FAR NO. LOCATION

	SIGNATURE	DATE
ENGR		
DWN		
CKD		
APPVD		
APPVD		

TITLE SOIL / GROUNDWATER REMEDIAL DESIGN
C-6 TORRANCE FACILITY
LOOP DIAGRAM - 5, SOLID HANDLING

DOUGLAS AIRCRAFT COMPANY
MCDONNELL DOUGLAS CORPORATION
FACILITIES

SHEET OF

MCDONNELL DOUGLAS CORPORATION - THIS INFORMATION IS SUBJECT TO DATA RIGHTS LEGENDS AT THE BEGINNING OF THE DOCUMENT.

MONTGOMERY WATSON
Pasadena, California

BOE-C6-0061210

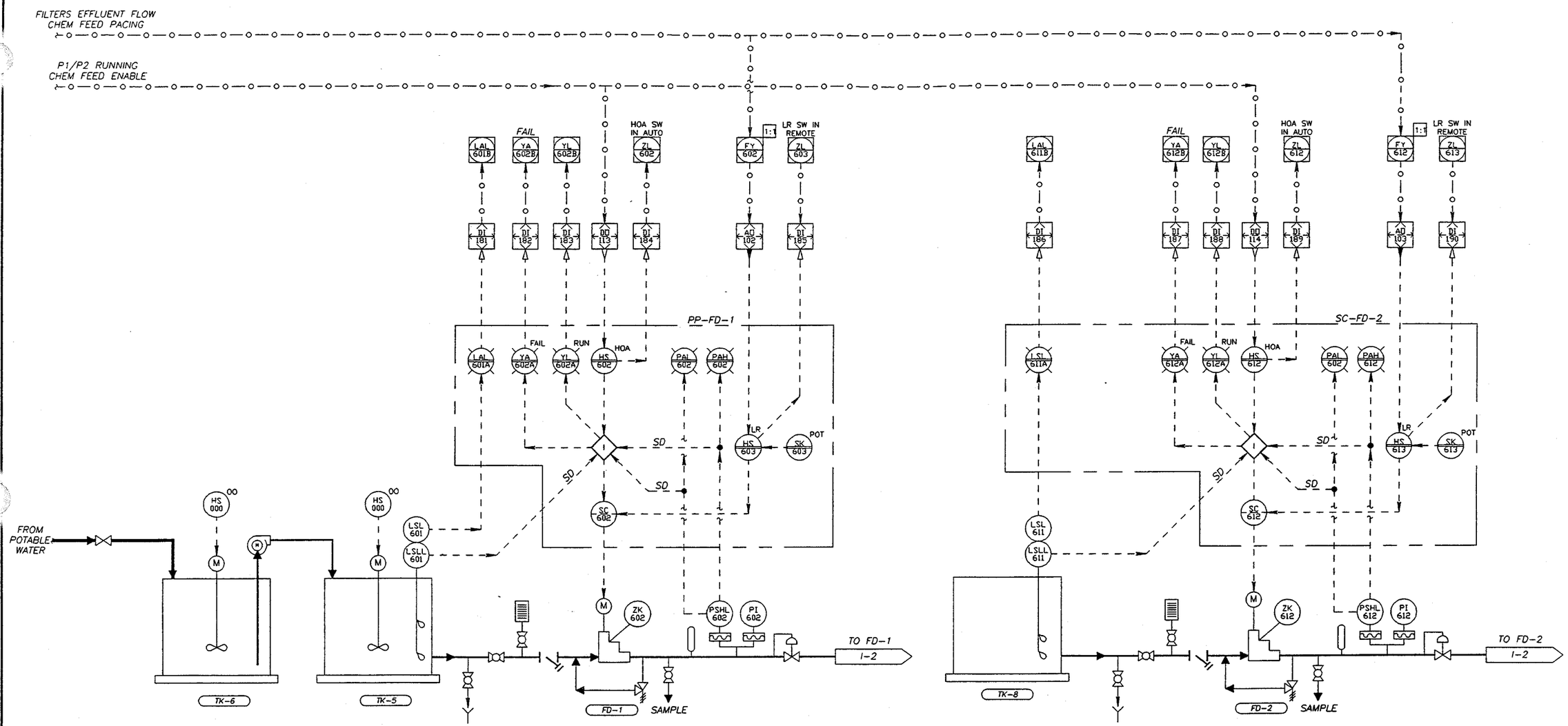

I-6

R.H. L.H. DASH NO	NO REQ	SIZE & DESCRIPTION OF MATERIAL			
SCALE.	LIMITS ON DIM. UNLESS OTHERWISE NOTED. ANGULAR FRAC. DEC.			SIGNATURE	DATE
FAR NO.		LOCATION	ENGR		
			DWN		
			CKD		
			APPVD		
			APPVD		

TITLE SOIL / GROUNDWATER REMEDIAL DESIGN
C-6 TORRANCE FACILITY
LOOP DIAGRAM-6, CHEMICAL FEED

DOUGLAS AIRCRAFT COMPANY
MCDONNELL DOUGLAS CORPORATION
FACILITIES

SHEET OF

MCDONNELL DOUGLAS CORPORATION – THIS INFORMATION IS SUBJECT TO DATA RIGHTS LEGENDS AT THE BEGINNING OF THE DOCUMENT.

MONTGOMERY WATSON
Pasadena, California

20.0085 FILE No. H:\PRJ\DOUGLAS\INS\C-6\DATIO6B 4/18/94

BOE-C6-0061211

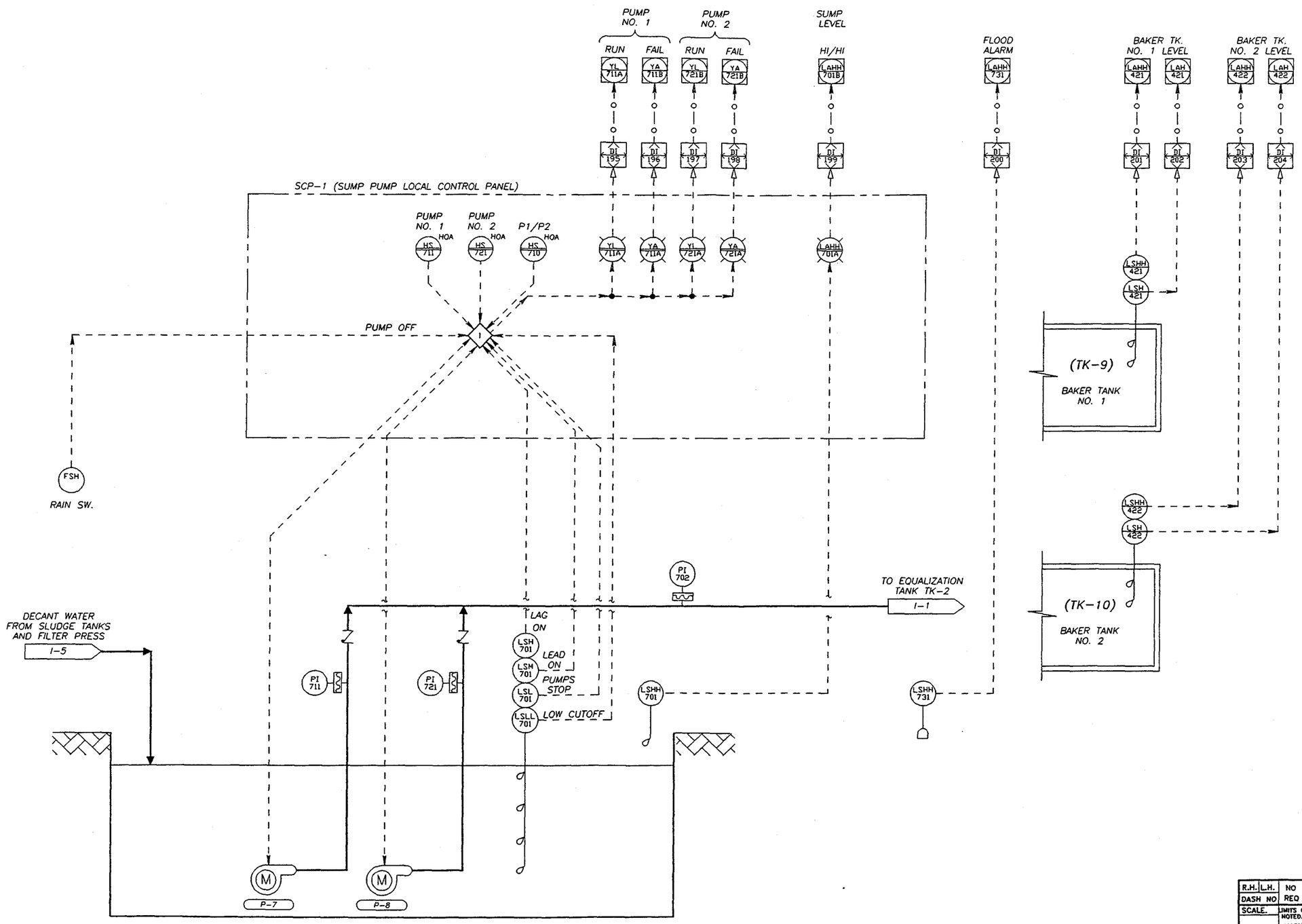

SUMP PUMP CONTROL LOOP

1-7

R.H. L.H. DASH NO	NO REQ	SIZE & DESCRIPTION OF MATERIAL			
SCALE.	UNITS ON DIM. UNLESS OTHERWISE NOTED. ANGULAR	FRAC. DEC.		SIGNATURE	DATE
			ENGR		
			DWN		
FAR NO.		LOCATION	CKD		
			APPVD		
			APPVD		

TITLE SOIL / GROUNDWATER REMEDIAL DESIGN
C-6 TORRANCE FACILITY
LOOP DIAGRAM - 7, SUMP/WASTE RECYCLE

DOUGLAS AIRCRAFT COMPANY
MCDONNELL DOUGLAS CORPORATION
FACILITIES

SHEET OF

MCDONNELL DOUGLAS CORPORATION - THIS INFORMATION IS SUBJECT TO DATA RIGHTS LEGENDS AT THE BEGINNING OF THE DOCUMENT.

MONTGOMERY WATSON
Pasadena, California

0085 FILE No. H:\PRJ\DOUGLAS\INS\C-6\DAT107B 4/18/94
BOE-C6-0061212

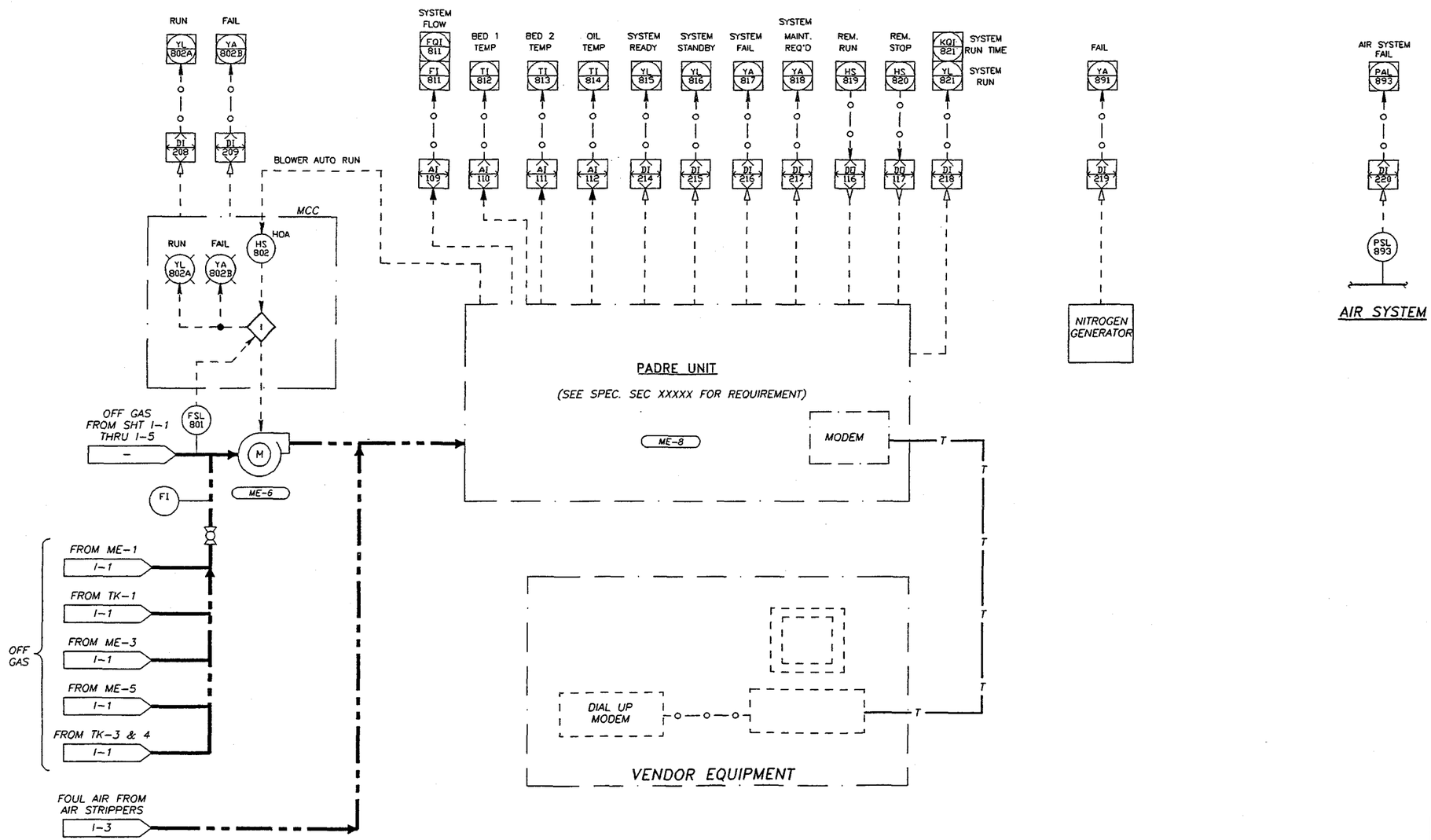

1-8

R.H.	L.H.	NO REQ	SIZE & DESCRIPTION OF MATERIAL
DASH NO			

SCALE.	LIMITS ON DIM. UNLESS OTHERWISE NOTED. ANGULAR	FRAC. DEC.		SIGNATURE	DATE
			ENGR		
			DWN		
FAR NO.	LOCATION		CKD		
			APPVD		
			APPVD		

TITLE SOIL / GROUNDWATER REMEDIAL DESIGN
C-6 TORRANCE FACILITY
LOOP DIAGRAM - 8, OFF GAS TREATMENT

DOUGLAS AIRCRAFT COMPANY
MCDONNELL DOUGLAS CORPORATION
FACILITIES

SHEET OF

MCDONNELL DOUGLAS CORPORATION - THIS INFORMATION IS SUBJECT TO DATA RIGHTS LEGENDS AT THE BEGINNING OF THE DOCUMENT.

MONTGOMERY WATSON
Pasadena, California

FILE No. M:\TRA\WWW\RSA\AVD\DRAWING\ 4/10/98
BOE-C6-0061213

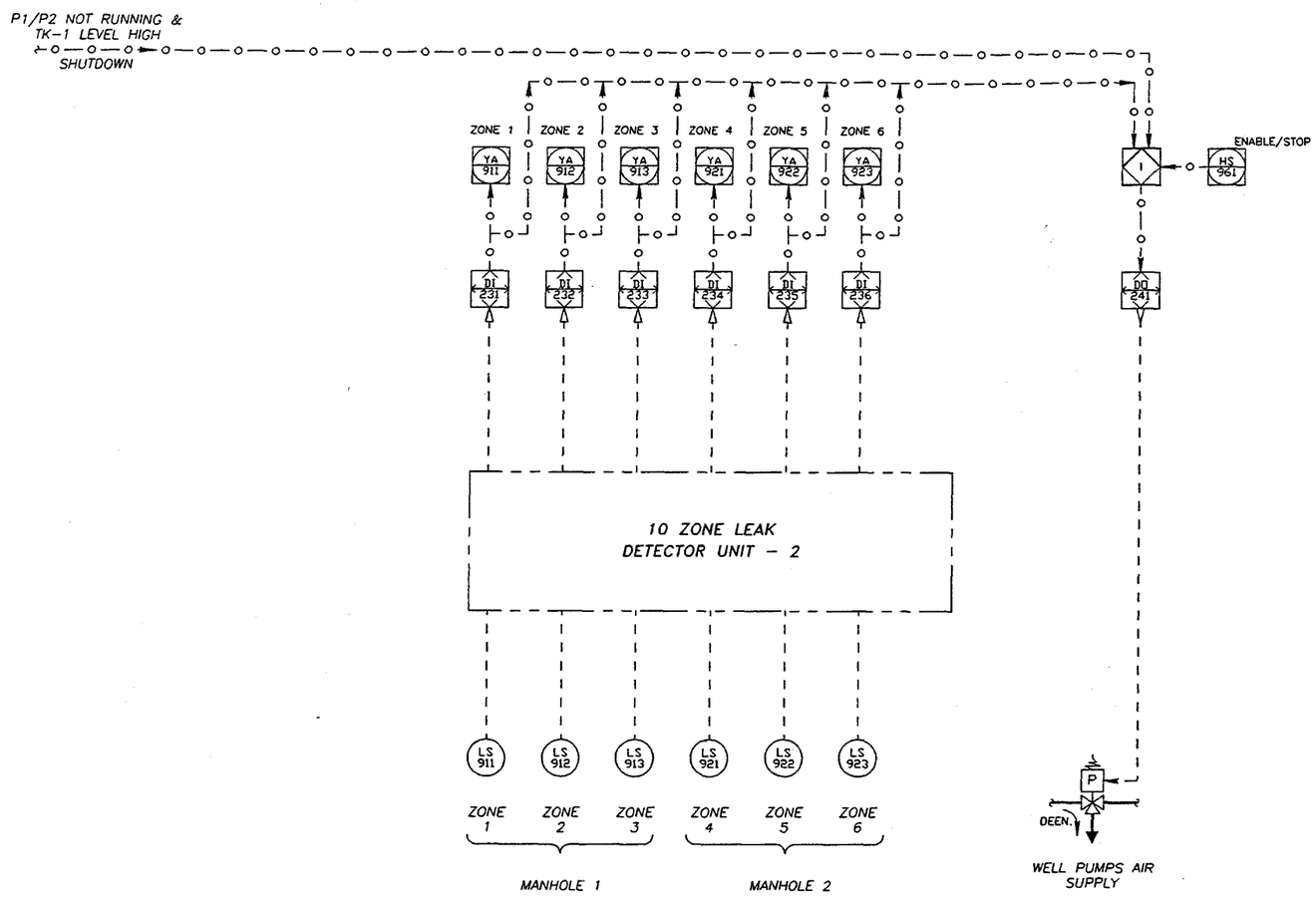

LEAK DETECTION

1–9

R.H.	L.H.	NO	SIZE & DESCRIPTION OF MATERIAL
DASH NO		REQ	

SCALE. LIMITS ON DIM. UNLESS OTHERWISE NOTED. ANGULAR FRAC. DEC.

FAR NO. LOCATION

	SIGNATURE	DATE
ENGR		
DWN		
CKD		
APPVD		
APPVD		

TITLE SOIL / GROUNDWATER REMEDIAL DESIGN
C–6 TORRANCE FACILITY
LOOP DIAGRAM – 9, LEAK DETECTION

DOUGLAS AIRCRAFT COMPANY
MCDONNELL DOUGLAS CORPORATION
FACILITIES

SHEET OF

MCDONNELL DOUGLAS CORPORATION – THIS INFORMATION IS SUBJECT TO DATA RIGHTS LEGENDS AT THE BEGINNING OF THE DOCUMENT.

MONTGOMERY WATSON
Pasadena, California

BOE-C6-0061214

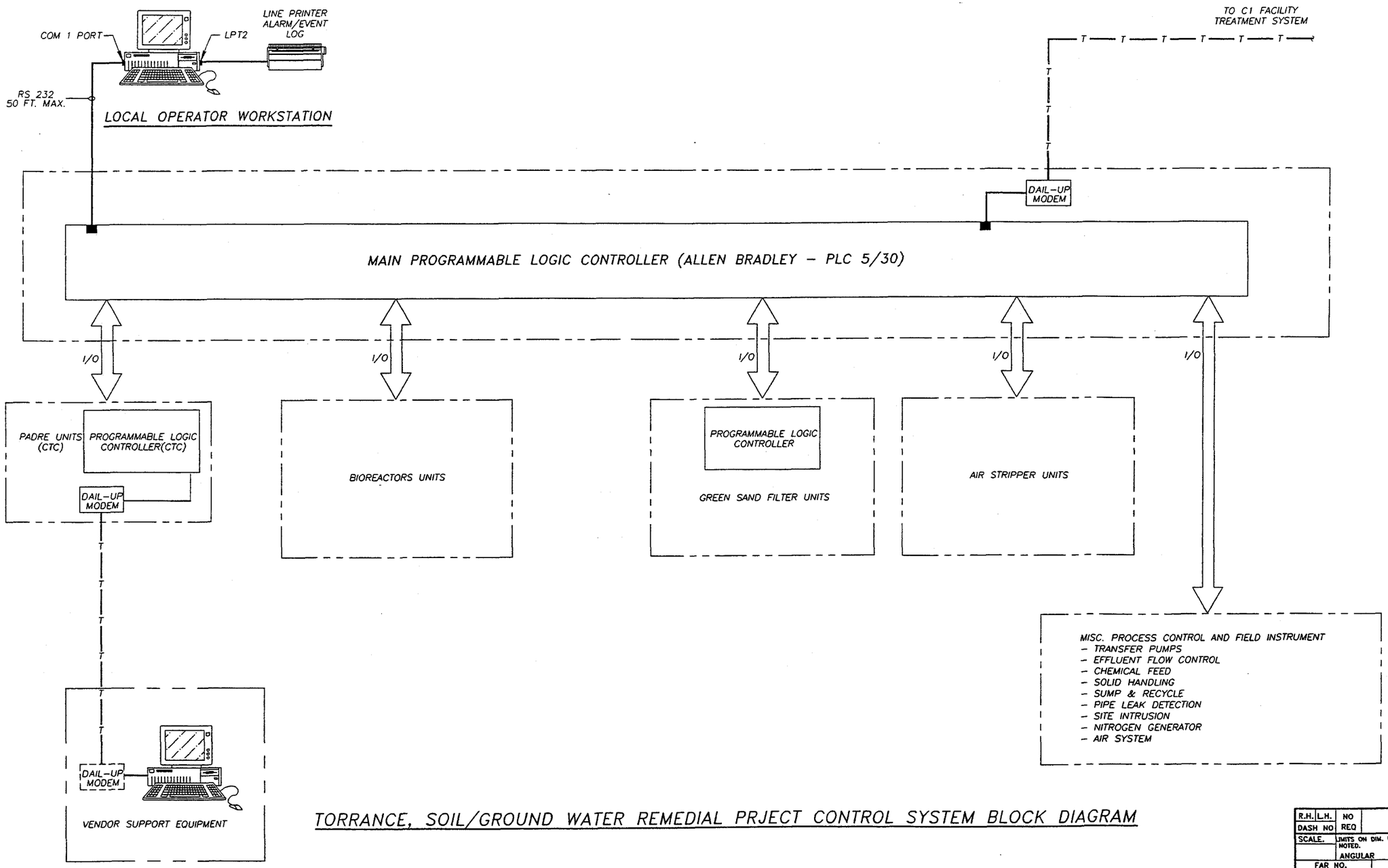

TORRANCE, SOIL/GROUND WATER REMEDIAL PRJECT CONTROL SYSTEM BLOCK DIAGRAM

I-10

R.H. L.H. DASH NO	NO REQ	SIZE & DESCRIPTION OF MATERIAL			
SCALE.	LIMITS ON DIM. UNLESS OTHERWISE NOTED.	FRAC.	ENGR	SIGNATURE	DATE
	ANGULAR	DEC.	DWN		
FAR NO.		LOCATION	CKD		
			APPVD		
			APPVD		

TITLE SOIL / GROUNDWATER REMEDIAL DESIGN
C-6 TORRANCE FACILITY
CONTROL BLOCK DIAGRAM

DOUGLAS AIRCRAFT COMPANY
MCDONNELL DOUGLAS CORPORATION
FACILITIES

SHEET OF

MCDONNELL DOUGLAS CORPORATION - THIS INFORMATION IS SUBJECT TO DATA RIGHTS LEGENDS AT THE BEGINNING OF THE DOCUMENT.

MONTGOMERY WATSON
Pasadena, California

BOE-C6-0061215

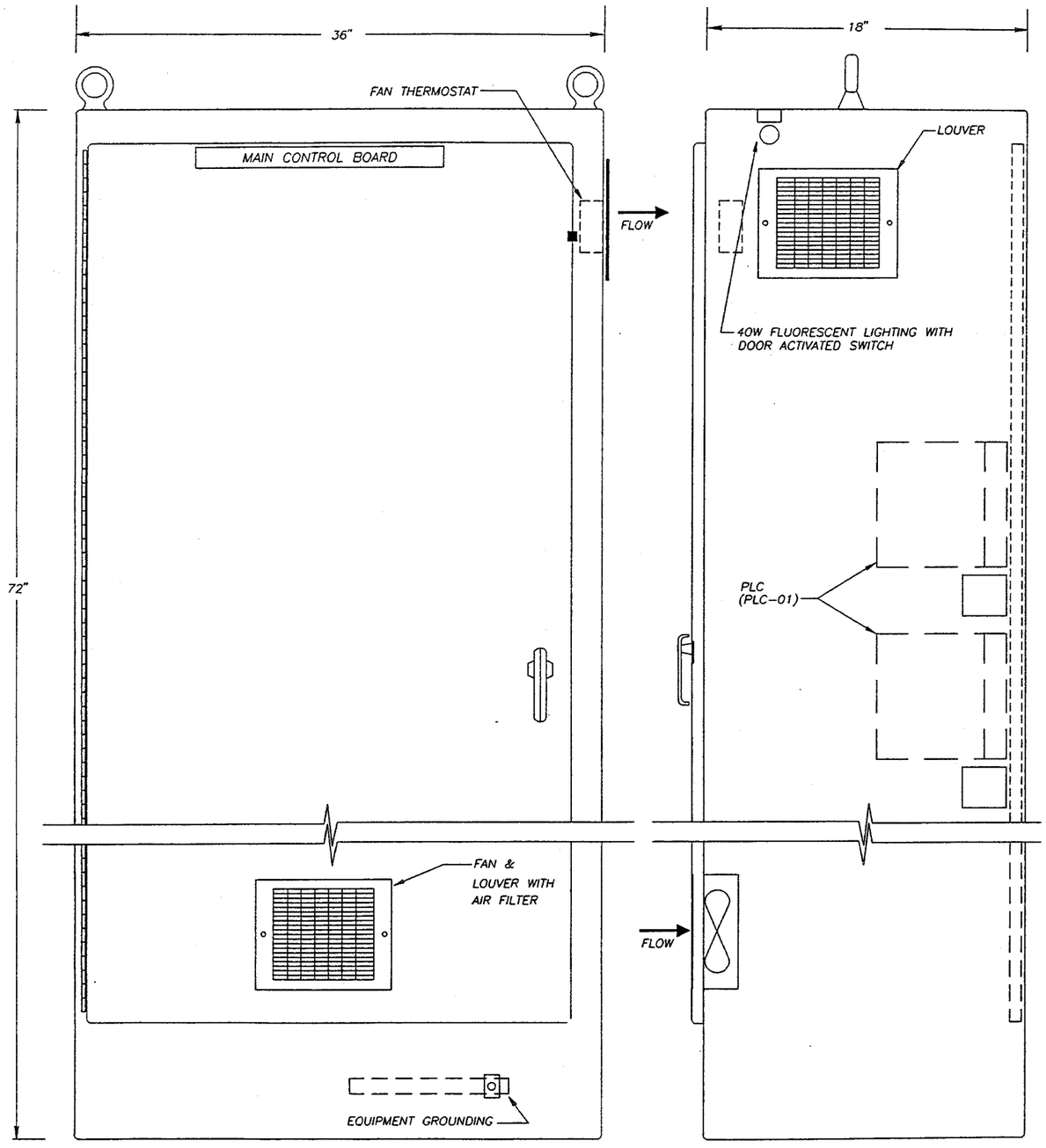

FRONT VIEW
SCALE: NTS

SIDE VIEW
SCALE: NTS

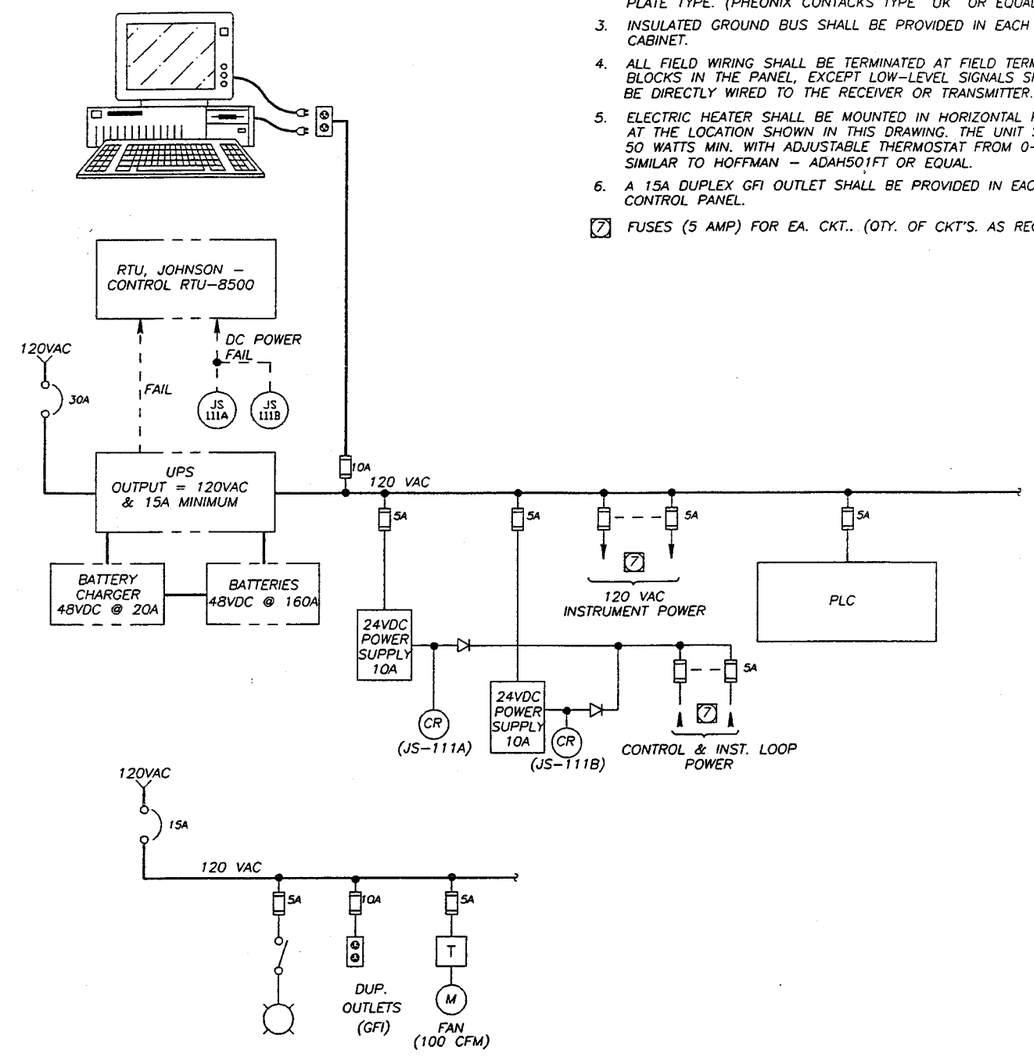

CONTROL POWER DISTRIBUTED DIAGRAM

NOTES:

1. ALL WIRE SHALL BE #16 AWG (MIN.) STRAND CU. 600V, THHN, 60°C.
2. TERMINAL BLOCKS SHALL BE SCREW TERMINAL W/ PRESSURE PLATE TYPE. (PHEONIX CONTACKS TYPE "UK" OR EQUAL)
3. INSULATED GROUND BUS SHALL BE PROVIDED IN EACH CABINET.
4. ALL FIELD WIRING SHALL BE TERMINATED AT FIELD TERMINAL BLOCKS IN THE PANEL, EXCEPT LOW-LEVEL SIGNALS SHALL BE DIRECTLY WIRED TO THE RECEIVER OR TRANSMITTER.
5. ELECTRIC HEATER SHALL BE MOUNTED IN HORIZONTAL POSITION AT THE LOCATION SHOWN IN THIS DRAWING. THE UNIT SHALL BE 50 WATTS MIN. WITH ADJUSTABLE THERMOSTAT FROM 0-100 F, SIMILAR TO HOFFMAN – ADAH501FT OR EQUAL.
6. A 15A DUPLEX GFI OUTLET SHALL BE PROVIDED IN EACH CONTROL PANEL.

[7] FUSES (5 AMP) FOR EA. CKT.. (QTY. OF CKT'S. AS REQUIRED)

I-11

R.H. L.H. DASH NO	NO REQ	SIZE & DESCRIPTION OF MATERIAL		
SCALE.	LIMITS ON DIM. UNLESS OTHERWISE NOTED. ANGULAR	FRAC. DEC.	SIGNATURE	DATE
		ENGR		
		DWN		
FAR NO.	LOCATION	CKD		
		APPVD		
		APPVD		

TITLE SOIL / GROUNDWATER REMEDIAL DESIGN
C-6 TORRANCE FACILITY
MAIN CONTROL BOARD LAYOUT & DETAILS

DOUGLAS AIRCRAFT COMPANY
MCDONNELL DOUGLAS CORPORATION
FACILITIES

SHEET OF

MCDONNELL DOUGLAS CORPORATION – THIS INFORMATION IS SUBJECT TO DATA RIGHTS LEGENDS AT THE BEGINNING OF THE DOCUMENT.

MONTGOMERY WATSON
Pasadena, California

BOE-C6-0061216

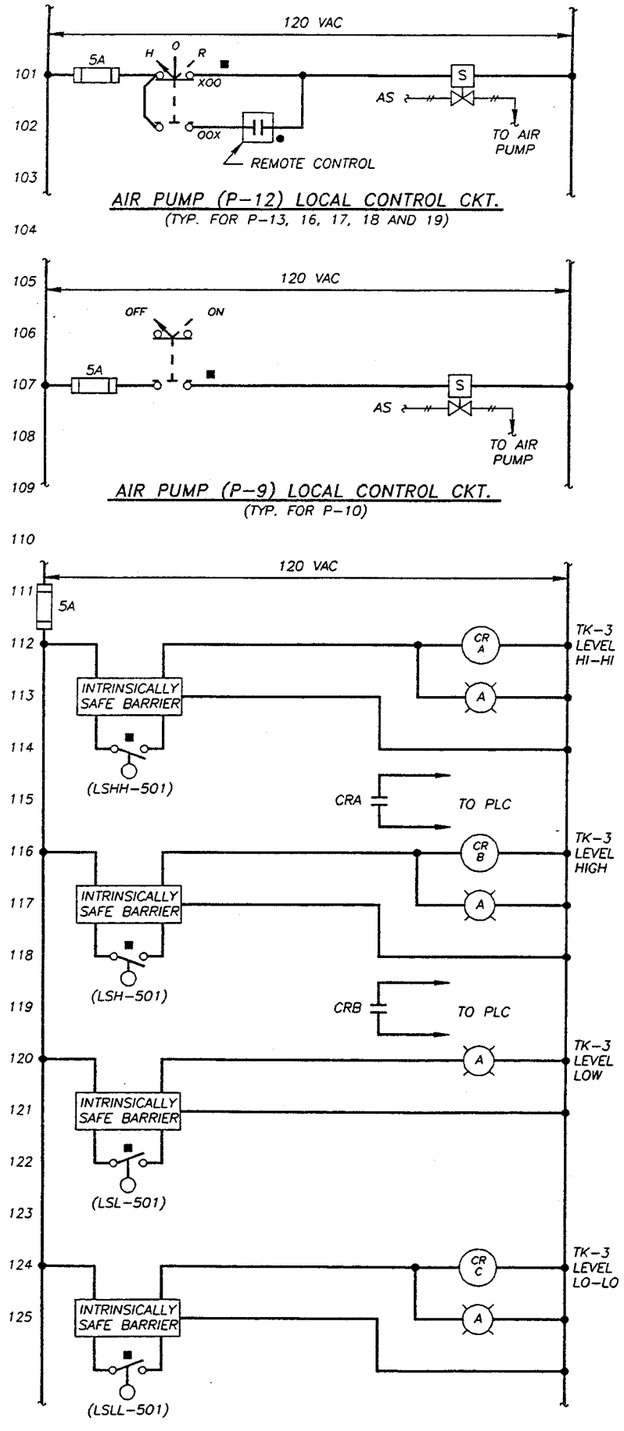

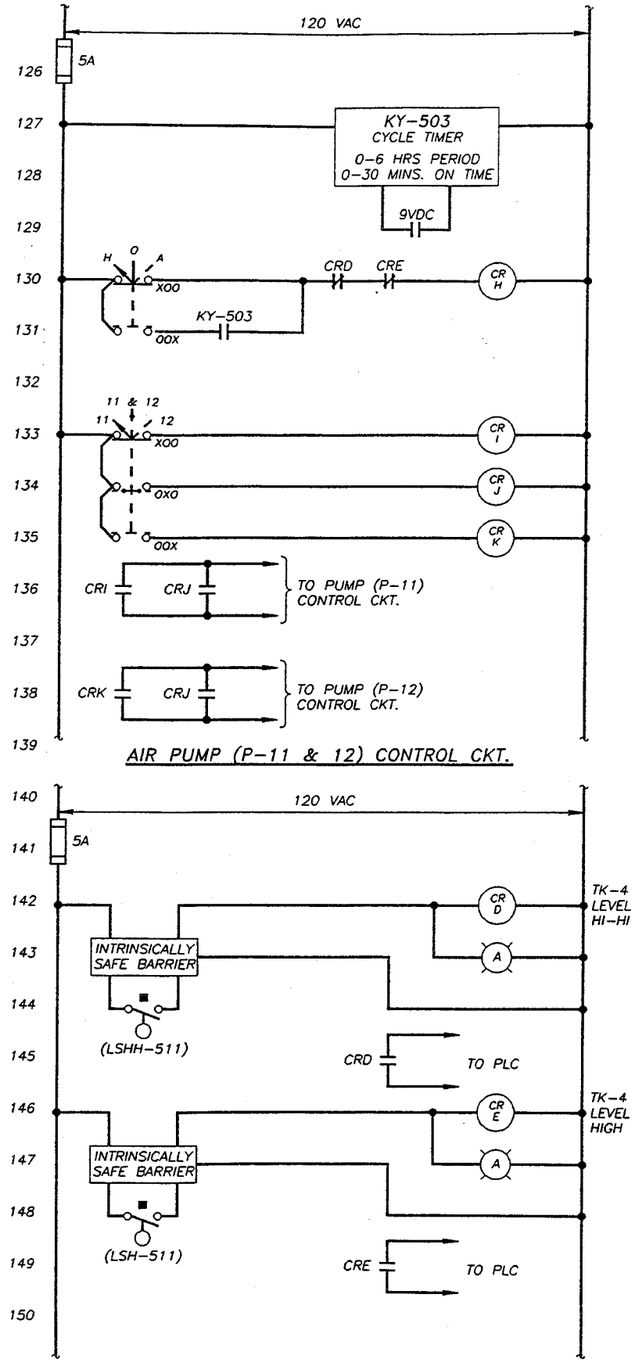

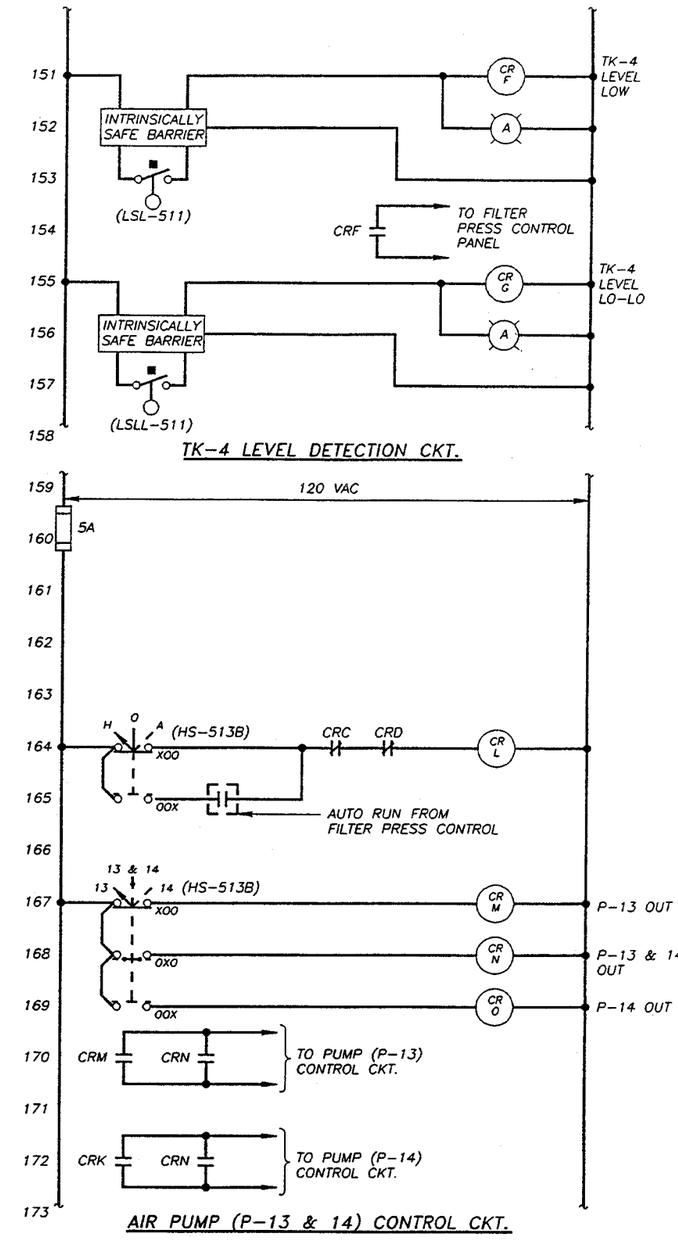

I-12

R.H. L.H. DASH NO	NO REQ	SIZE & DESCRIPTION OF MATERIAL			
SCALE.	LIMITS ON DIM. UNLESS OTHERWISE NOTED. ANGULAR	FRAC. DEC.		SIGNATURE	DATE
FAR NO.		LOCATION	ENGR		
			DWN		
			CKD		
			APPVD		
			APPVD		

TITLE SOIL / GROUNDWATER REMEDIAL DESIGN
C-6 TORRANCE FACILITY
CONTROL SCHEMATIC - 1

DOUGLAS AIRCRAFT COMPANY
MCDONNELL DOUGLAS CORPORATION
FACILITIES

SHEET OF

MCDONNELL DOUGLAS CORPORATION - THIS INFORMATION IS SUBJECT TO DATA RIGHTS LEGENDS AT THE BEGINNING OF THE DOCUMENT.

MONTGOMERY WATSON
Pasadena, California

BOE-C6-0061217

SYMBOLS

PLAN

- GROUND BUS
- EXPOSED CONDUIT
- CONDUIT CONCEALED ABOVE FLOOR.
- CONDUIT RUN UNDERGROUND OR IN CONCRETE
- EXPOSED CONDUIT RUN BEHIND OBSTRUCTION
- BARE COPPER GROUND TO GROUND WIRE IN SLAB. OR UNDERGROUND GROUND GRID. SIZE AS NOTED.
- (T) UNDERGROUND TELEMETRY CONDUIT
- LPI-1, 3, 7 — HOME RUN TO PANEL "LPI", CIRCUITS #1, 3, 7. CROSS MARKS INDICATE NUMBER OF CONDUCTORS. LONGER MARK INDICATES NEUTRAL. CONDUCTORS SHALL BE NO. 12 UNLESS OTHERWISE NOTED. CONDUIT SHALL BE ¾". UNLESS OTHERWISE NOTED. CONDUIT SIZES NOT IDENTIFIED SHALL BE ¾"C MINIMUM WITH 2#12. G INDICATES GROUND WIRE
- T — TELEPHONE CONDUIT ONLY. "1"C -2PAIRS OF TEL. WIRES UNLESS OTHERWISE NOTED".
- CONDUIT RUN - CHANGE IN ELEVATION
- CONDUIT BENDS TOWARD OBSERVER
- CONDUIT BENDS AWAY FROM OBSERVER
- CONDUIT CAPPED, OR SEALED
- FLEXIBLE LIQUID - TIGHT CONDUIT CONNECTION
- 1M - 1 — INDICATES CONDUIT NUMBER FROM MCC "1M" "1" INDICATES FEEDER NO.
- 2a — CEILING OR PENDANT INCANDESCENT, MERCURY VAPOR, OR SIMILAR LAMP FIXTURE. "2" INDICATES CIRCUIT NUMBER. "a" INDICATES FIXTURE CONTROLLED BY SWITCH "a".
- WALL BRACKET INCANDESCENT, MERCURY VAPOR, OR SIMILAR LAMP FIXTURE WITH EXPOSED BACK BOX AND CONDUIT.
- WALL BRACKET FLOOD OR SPOTLIGHT WITH CONCEALED BACK BOX AND CONDUIT.
- I — POLE MOUNTED FIXTURE DISTRIBUTION TYPE AS INDICATED ON PLAN
- A 2/40 3 — FIXTURE TYPE A. 2-40 WATT LAMPS 3 - NUMBER OF TYPE "A" FIXTURES
- FLUORESCENT LIGHTING FIXTURE, UNSWITCHED (SWITCHED AT LIGHTING PANEL ONLY)
- E — FLUORESCENT LIGHTING FIXTURE ON EMERGENCY CIRCUIT
- FLUORESCENT LIGHTING FIXTURE
- BATTERY EMERGENCY LIGHT FIXTURE
- $a — SINGLE POLE SWITCH. "a" INDICATES CIRCUIT CONTROLLED
- $2 — DOUBLE POLE SWITCH
- $3 — THREE-WAY SWITCH
- $4 — FOUR-WAY SWITCH
- $K — KEY-OPERATED SWITCH
- $P — SWITCH AND PILOT LIGHT
- $M — MANUAL MOTOR STARTER
- $WP — WEATHERPROOF SWITCH
- S — SMOKE DETECTOR
- H — HEAT DETECTOR
- M — MANUAL PULL STATION
- ALARM HORN W/FLASHING HORN

WALL	FLOOR	
		120V SINGLE RECEPTACLE. NEMA CONFIGURATION 5-20.
		120V DUPLEX RECEPTACLE. NEMA CONFIGURATION 5-20
		120V DOUBLE DUPLEX RECEPTACLE. NEMA CONFIGURATION 5-20
		240V DUPLEX RECEPTACLE. NEMA CONFIGURATION 6-20
		SINGLE SPECIAL-PURPOSE RECEPTACLE. ASTERISK INDICATES NUMBER. SUCH AS AMPERAGE. TO DIFFERENTIATE BETWEEN TWO OR MORE DIFFERENT TYPES. 120 OR 240 V.A.C.
		WELDING RECEPTACLE
		SINGLE SPECIAL PURPOSE RECEPTACLE 480 V.A.C.
		(C) CLOCK HANGER RECEPTACLE
		LIGHTING PANEL
		POWER PANEL
		MOTOR CONTROL CENTER
		FLOOR TYPE TELEPHONE OUTLET
		SOUND OR PAGING SYSTEM DEVICE. * DENOTES NUMBER TO DIFFERENTIATE BETWEEN DIFFERENT DEVICES.
		PUBLIC TELEPHONE SYSTEM DEVICE
		PRIVATE TELEPHONE (ANY TYPE) SYSTEM DEVICE
		GROUND ROD AND GROUND WELL
		GROUND CONNECTION BOLTED TYPE
		DISCONNECT SWITCH
		MOTOR STARTER
		(M) MOTOR
	SS	PUSHBUTTON STATION OR SELECTOR SWITCH "SS" START-STOP. "LOS" LOCKOUT-STOP. "SLOS" START-LOCKOUT-STOP H-HAND. M-MANUAL. R-REMOTE. L-LOCAL. A-AUTOMATIC. O-OFF
	JB	RACEWAY BOX "JB" JUNCTION BOX "MH" MANHOLE "HH" HANDHOLE "PB" PULLBOX "TB" TERMINAL BOX
		(J) JUNCTION BOX OR FITTING
	PSL-1	FIELD INSTRUMENT I.E. "PSL" PRESSURE SWITCH "LSH" LEVEL SWITCH "SV" SOLENOID VALVE
		(SV) SOLENOID VALVE
		(T) THERMOSTAT
		(H) HEATER
		HORN
		(1) DENOTES REFERENCE TO NOTE 1 I.E. - "SEE NOTE 1"
		GROUND ROD ¾" x 10' - 0" (UNLESS OTHERWISE NOTED)
		GROUND CONNECTION - EXOTHERMIC TYPE
		(M) MOTOR OPERATED VALVE
		CCTV CAMERA

SINGLE LINE DIAGRAM

- BUS
- I — ACROSS-THE-LINE. NON-REVERSING NEMA SIZE 1 MAGNETIC STARTER
- IV RVAT — NEMA SIZE 4 MAGNETIC STARTER: PW - PART WINDING, REV - REVERSING RV - REDUCED VOLTAGE. AUTO-AUTO TRANSFORMER 2SP-2W - TWO SPEED, TWO WINDING
- 30A — CONTACTOR. SIZE AS NOTED
- 50A — MOLDED CASE CIRCUIT BREAKER. 3 POLE UNLESS OTHERWISE NOTED: 50A.-TRIP RATING IN AMPERE NA-NON-AUTOMATIC MCP - MOTOR CIRCUITPROTECTOR AF-FRAME SIZE (225 AMPS NOTED) AT-TRIP RATING (125 AMPS NOTED)
- OR
- 225AF / 125AT
- 5a — MEDIUM OR HIGH VOLTAGE DRAWOUT BREAKER
- DRAWOUT BREAKER. SIZE AS NOTED EO - DENOTES ELECTRICALLY OPERATED
- MEDIUM OR HIGH VOLTAGE STARTER
- SURGE ARRESTOR
- (10) MOTOR 10 HP NOTED
- TRANSFORMER WITH GROUNDED SECONDARY. KVA SIZE & VOLTAGE RATIO AS NOTED.
- PT 480/120V (2) — POTENTIAL TRANSFORMER. RATIO AND NUMBER OF PT'S AS NOTED
- CT 100/5 (3) — CURRENT TRANSFORMER. RATIO AND NUMBER OF CT'S AS NOTED
- I — ELECTRICAL INTERLOCK
- ELECTRICAL ENCLOSURE OUTLINE
- (MOV) — ELECTRICAL MOTOR OPERATED VALVE. WITH INTEGRAL REVERSING STARTER
- DISCONNECT SWITCH. SIZE AS NOTED
- FUSED DISCONNECT SWITCH
- 10KVAR — CAPACITOR. KVAR AS NOTED
- (KWH DM) — KILOWATTHOUR METER WITH DEMAND REGISTER
- (AM) AMMETER
- (VM) VOLTMETER
- (PF) POWER FACTOR METER
- (VAR) VARMETER
- AS — AMMETER SWITCH
- VS — VOLTMETER SWITCH
- LCP — LOCAL CONTROL PANEL

SCHEMATIC DIAGRAM

- CONTROL RELAY OR COIL
- EXAMPLE: TD2 TIME DELAY RELAY NO. 2; CR1 CONTROL RELAY; 1M STARTER NO. 1 MAIN COIL
- N.O. CONTACT
- N.C. CONTACT
- TORQUE SWITCH (SPECIFY WHEN OPEN)
- NORMALLY OPEN LIMIT SWITCH
- NORMALLY CLOSED LIMIT SWITCH
- FLOAT TYPE LIQUID LEVEL SWITCH. CLOSING ON RISING LEVEL
- FLOAT TYPE LIQUID LEVEL SWITCH. OPENING ON RISING LEVEL
- VACUUM OR PRESSURE SWITCH. CLOSING ON RISING PRESSURE
- VACUUM OR PRESSURE SWITCH. OPENING ON RISING PRESSURE
- TEMPERATURE ACTUATED SWITCH: CLOSING ON RISING TEMPERATURE
- TEMPERATURE ACTUATED SWITCH: OPENING ON RISING TEMPERATURE
- FLOW SWITCH (AIR, WATER, ETC.): CLOSING ON FLOW INCREASE
- FLOW SWITCH (AIR, WATER, ETC.): OPENING ON FLOW INCREASE
- NORMALLY OPEN PUSHBUTTON. MOMENTARY CLOSE
- NORMALLY CLOSED PUSHBUTTON. MOMENTARY OPEN
- NO/NC MAINTAINED PUSHBUTTON
- ON OFF — TWO-POSITION SELECTOR SWITCH: H-HAND. M-MANUAL. R-REMOTE. L-LOCAL. A-AUTOMATIC. O-OFF
- H O A — THREE-POSITION SELECTOR SWITCH. (SAME AS ABOVE)
- THREE-POSITION SPRING RETURN-TO-CENTER MOMENTARY CONTACT SWITCH ("LATCH-UNLATCH." "ON-OFF," ETC.)
- SINGLE POLE TOGGLE SWITCH ("ON-OFF". ETC.)
- GROUND CONNECTION
- OL — OVERLOAD RELAY CONTACTS (MAGNETIC)

TIMED CONTACTS - CONTACT ACTION DELAYED AFTER COIL IS :

ENERGIZED

- NORMALLY OPEN WITH TIME DELAY CLOSING
- NORMALLY CLOSED WITH TIME DELAY OPENING

DE-ENERGIZED

- NORMALLY OPEN WITH INSTANT CLOSING AND TIME DELAY OPENING
- NORMALLY CLOSED WITH INSTANT OPENING AND TIME DELAY CLOSING
- MANUAL MOTOR STARTER WITH OVERLOAD PROTECTION
- FUSE
- RES — RESISTOR (FIXED)
- POTENTIOMETER TYPE RESISTOR (CONTINUOUSLY ADJUSTABLE)
- (R) — PUSH-TO-TEST INDICATING LIGHT
- ETM — ELAPSED TIME METER
- HEATER
- CROSSING OF CONDUCTORS-NOT CONNECTED
- CONNECTION OF CONDUCTORS, FITTING AS REQUIRED
- DISCONNECT SWITCH
- TERMINATION IN MCC
- FIELD TERMINATION (DEVICES)
- TERMINATION IN CP. OR LCP
- ELECTRODE PROBES
- ▲ PANEL MOUNTED DEVICE (SCHEMATIC)
- ■ FIELD OR REMOTE MOUNTED DEVICE (SCHEMATIC)

E-1

MCDONNELL DOUGLAS CORPORATION - THIS INFORMATION IS SUBJECT TO DATA RIGHTS LEGENDS AT THE BEGINNING OF THE DOCUMENT.

MONTGOMERY WATSON
Pasadena, California

R.H. L.H. DASH NO	NO REQ	SIZE & DESCRIPTION OF MATERIAL			
SCALE. NONE	LIMITS ON DIM. UNLESS OTHERWISE NOTED. ANGULAR FRAC. DEC.			SIGNATURE	DATE
FAR NO.	LOCATION		ENGR		
			DWN		
			CKD		
			APPVD		
			APPVD		

TITLE SOIL / GROUNDWATER REMEDIAL DESIGN
C-6 TORRANCE FACILITY
ELECTRICAL SYMBOLS

DOUGLAS AIRCRAFT COMPANY
MCDONNELL DOUGLAS CORPORATION
FACILITIES

SHEET OF

A B B R E V I A T I O N S

A	AMPERE, AUTO. AMMETER
AC	ALTERNATING CURRENT
A/C	AIR CONDITIONING
AF	AMPERE FRAME SIZE OF CKT.BRKRS.
AFD	ADJUSTABLE FREQUENCY DRIVE
AFF	ABOVE FINISHED FLOOR
AL	ALUMINUM
AM	AMMETER
ANN	ANNUNCIATOR
AMP	AMPERES, AMPERAGE
APPR	APPROVED
AS	AMMETER SWITCH, ADJUSTABLE SPEED
AT	AMPERE TRIP
ATS	AUTOMATIC TRANSFER SWITCH
AUTO	AUTOMATIC
AWG	AMERICAN WIRE GAUGE
BATT	BATTERY
BKR	BREAKER
BBL	BUBBLER
BLDG	BUILDING
C	CONDUIT, CLOSED
CAB	CABINET
CB	CIRCUIT BREAKER
CKT	CIRCUIT
CO	CONDUIT ONLY
COND	CONDUIT
COMPT	COMPARTMENT
COMPR	COMPRESSOR
CP	CONTROL PANEL
CPT	CONTROL POWER TRANSFORMER (IN INDVIDUAL STARTER CUBICLE)
CR	CONTROL RELAY (MAGNETICALLY HELD)
CT	CURRENT TRANSFORMER
CU	COPPER
DC	DIRECT CURRENT
DH	DATA HIGHWAY
DISC	DISCONNECT
DISTR	DISTRIBUTION
DPDT	DOUBLE POLE DOUBLE THROW
DWG	DRAWING
E	EMPTY, EMERGENCY
ELEV	ELEVATION
EMERG	EMERGENCY
EMT	ELECTRICAL METALLIC TUBING
ENCL	ENCLOSURE
EP	EXPLOSION PROOF
EQPT	EQUIPMENT
ER	CONDUCTANCE LEVEL RELAY
ETM	ELAPSED TIME METER
EXH	EXHAUST
EXIST	EXISTING
F, ~	FREQUENCY
FDR	FEEDER
FLEX	FLEXIBLE
FLUOR	FLUORESCENT
FM	FREQUENCY METER
FUT	FUTURE
FVR	FULL VOLTAGE REVERSING
FVNR	FULL VOLTAGE NON-REVERSING
FWD	FORWARD CONTACTOR COIL
GALV	GALVANIZED
GEN	GENERATOR
GFR	GROUND FAULT RELAY
GFS	GROUND FAULT SENSOR
GRD	GROUND
HH	HAND HOLE
HID	HIGH INTENSITY DISCHARGE
HIGH	HIGH SPEED CONTACTOR
HOA	HAND - OFF - AUTOMATIC
HP	HORSE POWER
HPS	HIGH PRESSURE SODIUM
HTR	HEATER
HVAC	HEATING VENTILATION AIR CONDITIONING
HZ	HERTZ
IMC	INTERMEDIATE METAL CONDUIT
INCAND	INCANDESCENT
IND	INDICATION (SYSTEM)
I/O	INPUT/OUTPUT
INST	INSTANTANEOUS (TD CONTACT)
INSTR	INSTRUMENT
Isc	SHORT CIRCUIT CURRENT, AMPS
INVT	INVERT
JB	JUNCTION BOX
J BOX	JUNCTION BOX
KVA	KILO (1000) VOLT AMPS
KW	KILOWATTS
KWH	KILOWATT HOUR
LC	LIGHTING CONTACTOR
LCB	LOCAL CONTROL BOARD
LCP	LOCAL CONTROL PANEL
LOC	LOCAL
LOS	PUSHBUTTON W/"LOCK-OUT-STOP"
LS	LEVEL SWITCH
LT, LTS	LIGHT, LIGHTS
LTG	LIGHTING
LOW	LOW SPEED CONTACTOR
M	MOTOR CONTACTOR COIL
MA	MILLIAMPS
MAN	MANUAL
MAG	MAGNETIC
MAX	MAXIMUM
MCC	MOTOR CONTROL CENTER
MCB	MAIN CONTROL BOARD
MCM	THOUSAND CIRCULAR MILS
MCP	MOTOR CONTROL PANEL
MD	MOTORIZED DAMPER
MH	MANHOLE
MIN	MINUTES, MINIMUM
MLO	MAIN LUGS ONLY
MOV	MOTOR OPERATED VALVE
MS	MANUAL MOTOR STARTER
MT, MTD	MOUNT, MOUNTED
MTR	MOTOR
MUX	MULTIPLEXING PANEL
N	NEUTRAL
NA	NON-AUTOMATIC
NC	NORMALLY CLOSED
NO, NOS	NUMBER, NUMBERS, NORMALLY OPEN
NP	NAMEPLATE
NIC	NOT IN CONTRACT
NITS	NOT IN THIS SECTION
NTS	NOT TO SCALE
O	OPEN
OC	ON CENTER
CC	CENTER TO CENTER
OL	OVERLOAD RELAY
OTT	TRANSFORMER OVERTEMPERATURE SW.
P	POLE
PB	PUSHBUTTON
PCM	PROCESS CONTROL MODULE
PCP	PROCESS CONTROL PANEL
PDP	POWER DISTRIBUTION PANEL
PF	POWER FACTOR
PH, Ø	PHASE
PNL	PANEL
PNLBD	PANELBOARD
POS	POSITION
POT	POTENTIOMETER
PP	POWER PANEL
PRI	PRIMARY
PS	PRESSURE SWITCH
PT	POTENTIAL TRANSFORMER
PVC	POLYVINYL CHLORIDE
PW	PART WINDING
PWR	POWER
REC	RECEPTACLE
RECPTS	RECEPTACLES
REQ'D	REQUIRED
REV	REVERSE CONTACTOR COIL
RGS	RIGID GALVANIZED STEEL
RUN	RUN CONTACTOR COIL
RTU	REMOTE TERMINAL UNIT
RVAT	REDUCED VOLTAGE AUTO-TRANSFORMER
RVNR	REDUCED VOLTAGE NON-REVERSING
SCH	SCHEDULE
SEC	SECONDS, SECONDARY
SECT	SECTION
SEL SW	SELECTOR SWITCH
SEQ	SEQUENCE
SHLD	SHIELDED
SHT	SHEET
SIG	SIGNAL
S1, S2	START CONTACTOR COILS
SP	SPARE
SPDT	SINGLE POLE DOUBLE THROW
SPECS	SPECIFICTIONS
SP HTR	SPACE HEATER
SPST	SINGLE POLE SINGLE THROW
ST. SH	SHUNT TRIP
STA	STATION
STD	STANDARD
STL	STEEL
STR	STARTER
SV	SOLENOID VALVE
SW	SWITCH
SWBD	SWITCHBOARD
SYS	SYSTEM
TB	TERMINAL BOX
TC	TIME CLOCK
TACH	TACHOMETER
TEMP	TEMPERATURE
TERM	TERMINAL
TH	THERMOSTAT
TM	REPEAT CYCLE TIMER
TD	TIME DELAY RELAY
TS	TEMPERATURE SWITCH
TYP	TYPICAL
UG	UNDERGROUND
UH	UNIT HEATER
US	UNIT SUBSTATION
UST	UNIT SUBSTATION TRANSFORMER
V	VOLTAGE, VOLTS
VAR	VAR METER
VFD	VARIABLE FREQUENCY DRIVE
VSD	VARIABLE SPEED DRIVE (OTHER THAN VFD)
VP	VAPORPROOF
VS	VARIABLE SPEED, VOLTMETER SWITCH
W	WATTS, WIRE
WHD	WATTHOUR DEMAND METER
WHM	WATTHOUR METER
WP	WEATHERPROOF
XD	TRANSDUCER
XFMR	TRANSFORMER
XMTR	TRANSMITTER

GENERAL NOTES

RACEWAY

1. ALL CONDUIT, CABLE, CABLE TRAY RUNS ARE SHOWN DIAGRAMMATICALLY AND THEY SHALL BE ROUTED TO SUIT FIELD CONDITIONS.
2. THE CONTRACTOR SHALL VERIFY EXACT LOCATION OF TERMINAL BOXES AND CONDUIT EMTRANCES OF ALL EQUIPMENT AGAINST SHOP DRAWINGS BEFORE STUBBING UP CONDUITS.
3. CONNECTION BETWEEN RIGID CONDUIT AND MOTOR TERMINAL BOX SHALL BE LIQUID TIGHT FLEXIBLE CONDUIT.
4. CONDUIT TERMINATING AT SWITCHBOARD, MOTOR CONTROL CENTER, POWER AND LIGHTING PANEL CONTROL CABINET, ETC SHALL BE EQUIPPED WITH SEALING HUB AND GROUNDING BUSHING, AND SHALL BE GROUNDED WITH NO. 6 GROUND WIRE.
5. INSTALL EXPANSION FITTINGS EVERY 200 FEET OF STRAIGHT RUN OF CONDUITS AND CABLE TRAYS.
6. CONDUIT CROSSING BUILDING OR STRUCTURAL EXPANSION JOINTS SHALL BE PROVIDED WITH SUITABLE EXPANSION FITTINGS. THESE FITTINGS MUST BE CONSTRUCTED IN SUCH A MANNER THAT WILL INSURE THE CONTINUITY OF THE GROUND PATH IN EACH CONDUIT OR RACEWAY.
7. CONDUIT FITTINGS AND SUPPORTS ARE NOT SHOWN ON THE DRAWINGS. THE CONTRACTOR SHALL PROVIDE ALL FITTINGS AND SUPPORT REQUIRED AND TO SUIT THE CONDITIONS.
8. THE CONTRACTOR SHALL LIMIT THE NUMBER OF BENDS BETWEEN PULL POINTS.
9. THE CONTRACTOR SHALL BE RESPONSIBLE FOR PROVIDING ALL SLEEVES AND OPENINGS REQUIRED FOR THE PASSAGE OF ELECTRICAL RACEWAYS OR CABLES EVEN WHEN THESE OPENINGS OR SLEEVES ARE NOT SPECIFICALLY SHOWN ON THE DRAWINGS.
10. PROVIDE FLEXIBLE CONDUIT WHERE RIGID CONDUIT TERMINATES AT EQUIPMENT OR DEVICES SUBJECT TO MOVEMENT FROM VIBRATION, EXPANSION AND CONTRACTION.
11. ALL UNDERGROUND CONDUIT RUNS SHALL BE WITH LONG RADIUS SWEEP BENDS. THE MINIMUM BENDING RADIUS SHALL BE 12 TIMES NOMINAL DIAMETER OF THE CONDUIT, AND NO FACTORY BENDS SHALL BE PERMITTED.
12. ALL UNDERGROUND CONDUITS NOT ENCASED IN CONCRETE SHALL BE RIGID STEEL, GALVANIZED, PVC COATED.
13. THE MINIMUM SIZE OR CONDUITS INSTALLED BELOW GRADE SHALL BE 1" UNLESS OTHERWISE NOTED.
14. THE MINIMUM SIZE OF CONDUIT INSTALLED ABOVE GRADE SHALL BE ¾" UNLESS OTHERWISE NOTED.
15. ALL FLEXIBLE CONDUIT SHALL HAVE COPPER GROUNDING CONDUCTOR.
16. FOR LIGHTING AND RECEPTACLE SYSTEMS, ONLY CONDUIT HOMERUNS AND CIRCUIT NUMBERS ARE SHOWN. CONTRACTOR SHALL PROVIDE AND INSTALL ALL NECESSARY CONDUITS, FITTINGS, JUNCTION BOXES AND ALL NECESSARY COMPONENTS SHOWN OR NOT SHOWN ON THE DRAWINGS TO MAKE ELECTRICAL INSTALLATION COMPLETE AND OPERATIONAL. ALL CONDUITS RUNS SHALL BE CONCEALED UNLESS INDICATED OTHERWISE. CIRCUIT LOADING SHALL BE AS SHOWN AND AS STATED IN PANEL SCHEDULE. ALL INSTALLATIONS SHALL BE IN ACCORDANCE WITH ALL CODES AND STANDARDS AS ENUMERATED IN SPEC. SECTION 16050. ALL MATERIALS SHALL BE IN ACCORDANCE WITH SPEC. SECTION 16400 AND 16500 ALL LIGHTING AND RECEPTACLE CIRCUITS SHALL INCLUDE #12 GROUND WIRE.

GROUNDING

1. ALL METALLIC STRUCTURES, METALLIC ENCLOSURES, AND ELECTRICAL EQUIPMENT, SUCH AS STRUCTURAL STEEL, METALLIC RACEWAY, FENCE, STAIR HANDRAILS, LIGHTING POLE, TANK, VESSELS, SWITCHING EQUIPMENT, PANEL EQUIPMENT ENCLOSURE AND CABINETS GENERATOR, MOTOR, TRANSFORMERS, SWITCHGEAR, ETC. SHALL BE PERMANENTLY AND EFFECTIVELY GROUNDED AND GROUND CONNECTION SHALL BE MADE TO THE PLANT GROUND GRID. THE GROUND CONDUCTOR SHALL BE SIZED PER N.E.C. UNLESS OTHERWISE SHOWN EXCEPT THE MINIMUM SIZE.
2. GROUNDING CONDUCTOR STUB-UP AND INSERT LOCATION ARE APPROXIMATE ONLY. THE CONTRACTOR SHALL USE HIS BEST JUDGEMENT FOR CORRECT LOCATIONS IN FIELD.
3. ALL GROUND CONDUCTORS SHALL BE #4/0 SIZE UNLESS OTHERWISE NOTED.
4. ALL GROUND CONDUCTOR SHALL BE BARE, COPPER, STRANDED UNLESS OTHERWISE NOTED.
5. ALL GROUNDING CONDUCTOR SHALL BE MINIMUM OF 18" BELOW GRADE EXCEPT UNDER BUILDING SLAB WHEN THEY SHALL BE MINIMUM OF 6" BELOW SLAB.

EQUIPMENT AND DEVICES

1. LOCATIONS OF EQUIPMENT, CONTROL DEVICES, INSTRUMENTS, BOXES, PANELS, ETC ARE APPROXIMATE ONLY, AND PROPER JUDGEMENT MUST BE EXERCISED IN EXECUTING THE WORK TO INSURE THE BEST POSSIBLE INSTALLATION.
2. PACKAGE EQUIPMENT. SOME CONDUITS AND WIRES ARE SHOWN ON THE DRAWINGS, BUT IT IS EXPECTED THAT SOME ADDITIONAL CONDUITS AND WIRES MAY BE REQUIRED BY EQUIPMENT MANUFACTURERS TO COMPLETE INSTALLATION. IT IS INCUMBENT UPON THE GENERAL CONTRACTOR TO COORDINATE THIS REQUIREMENT WITH HIS SUBCONTRACTORS TO MAKE SURE THAT EQUIPMENT SUPPLIER PROVIDES ALL NECESSARY ELECTRICAL INFORMATION TO HIS ELECTRICAL SUBCONTRACTOR FOR INCLUSION OF COSTS IN BID PACKAGE. ALL NECESSARY MATERIALS AND LABOR TO COMPLETE ELECTRICAL INSTALLATION SHALL BE PROVIDED WHETHER SHOWN OR NOT SHOWN ON THE DRAWINGS. ALL ELECTRICAL WORK SHALL BE IN ACCORDANCE WITH ALL CODES AND STANDARDS PER SPEC. SECTIONS DIVISION 16.
3. ALL EQUIPMENT DIMENSIONS SHOWN ON PLANS AND ELEVATIONS ARE APPROXIMATE ONLY. THE CONTRACTOR SHALL USE THE SHOP DRAWINGS FOR PROPER LAYOUT, FOUNDATION AND PAD, ETC. FOR FINAL INSTALLATION. WITHOUT ANY ADDITIONAL COST TO THE OWNER.
4. SWITCHGEAR, SWITCHBOARD, MOTOR CONTROL CENTER AND ALL FREE STANDING PANEL SHALL BE SET ON CONCRETE PAD AND LEVELING CHANNELS EMBEDDED IN THE PAD UNLESS OTHERWISE NOTED.

SCHEMATIC DIAGRAMS

1. ALL CONTROLS ARE SHOWN DE-ENERGIZED
2. ALL CONTROL DIAGRAMS SHOW CONTROL FUNCTION ONLY. CONTRACTOR SHALL INCORPORATE OTHER NECESSARY FUNCTIONS FOR PROPER OPERATIONS AND PROTECTION ON THE SYSTEM.
3. SLAVE RELAY SHALL BE ADDED WHERE REQUIRED TO PROVIDE ALL NECESSARY CONTACTS FOR THE SCHEMATIC DIAGRAMS SHOWN.
4. ALL DEVICES SHOWN ON MOTOR STARTER SCHEMATIC DIAGRAMS SHALL BE MOUNTED IN THE MOTOR STARTER CUBICLES UNLESS OTHERWISE NOTED.
5. ALL DEVICES SHOWN IN THE CONTROL PANEL OR CABINET SHALL BE MOUNTED IN THE CONTROL PANEL OR CABINET UNLESS OTHERWISE NOTED.
6. ALL MOTOR OPERATED VALVES ARE SHOWN FULLY OPEN.

MISCELLANEOUS

1. IN CASE OF INTERFERENCE BETWEEN ELECTRICAL EQUIPMENT SHOWN ON THE DRAWINGS AND THE OTHER EQUIPMENT, THE CONTRACTOR SHALL NOTIFY THE ENGINEER IN WRITING AND ENGINEER SHALL REVIEW THE PROPOSED CHANGES BEFORE THEY ARE MADE.
2. ALL RECEPTACLES SHALL BE MOUNTED 12" ABOVE FLOOR SURFACE UNLESS OTHERWISE NOTED.
3. ALL RECEPTACLES IN OUTDOOR AND ANTICIPATED WET AREA SHALL BE GROUND FAULT INTERRUPTER RECEPTACLES.
4. ALL OUTDOOR DEVICES SHALL BE WEATHERPROOF TYPE.
5. LOCATION OF MANHOLES AND PULLBOXES ARE APPROXIMATE. CONTRACTOR SHALL COORDINATE EXACT LOCATION OF MANHOLES AND PULLBOXES WITH MECHANICAL AND CIVIL WORK.
6. CONTRACTOR SHALL PROVIDE ADDITIONAL MANHOLES OR PULLBOXES TO THOSE SHOWN WHERE THEY ARE REQUIRED TO MAKE A WORKABLE INSTALLATION.
7. CIRCUITS OF DIFFERENT SERVICE VOLTAGE SHALL BE INSTALLED IN SEPARATE RACEWAYS, MANHOLES, HANDHOLES, PULLBOXES AND JUNCTION BOXES. THE VOLTAGE AND SERVICE LEVELS ARE:

(1) 12KV, 13.2KV, 16.5KV, 21KV
(2) 2.4KV, 5KV
(3) 120V-480VOLT
(4) INSTRUMENTATION LESS THAN 50VDC
(5) TELEPHONE AND COMMUNICATIONS.

E-2

R.H. L.H.	NO REQ	SIZE & DESCRIPTION OF MATERIAL			
DASH NO					
SCALE.	LIMITS ON DIM. UNLESS OTHERWISE NOTED.			SIGNATURE	DATE
NONE	ANGULAR	FRAC. DEC.	ENGR		
			DWN		
FAR NO.	LOCATION		CKD		
			APPVD		
			APPVD		

TITLE SOIL / GROUNDWATER REMEDIAL DESIGN
C-6 TORRANCE FACILITY
ELECTRICAL ABBREVATIONS

DOUGLAS AIRCRAFT COMPANY
MCDONNELL DOUGLAS CORPORATION
FACILITIES

SHEET OF

MCDONNELL DOUGLAS CORPORATION - THIS INFORMATION IS SUBJECT TO DATA RIGHTS LEGENDS AT THE BEGINNING OF THE DOCUMENT.

MONTGOMERY WATSON
Pasadena, California

BOE-C6-0061219

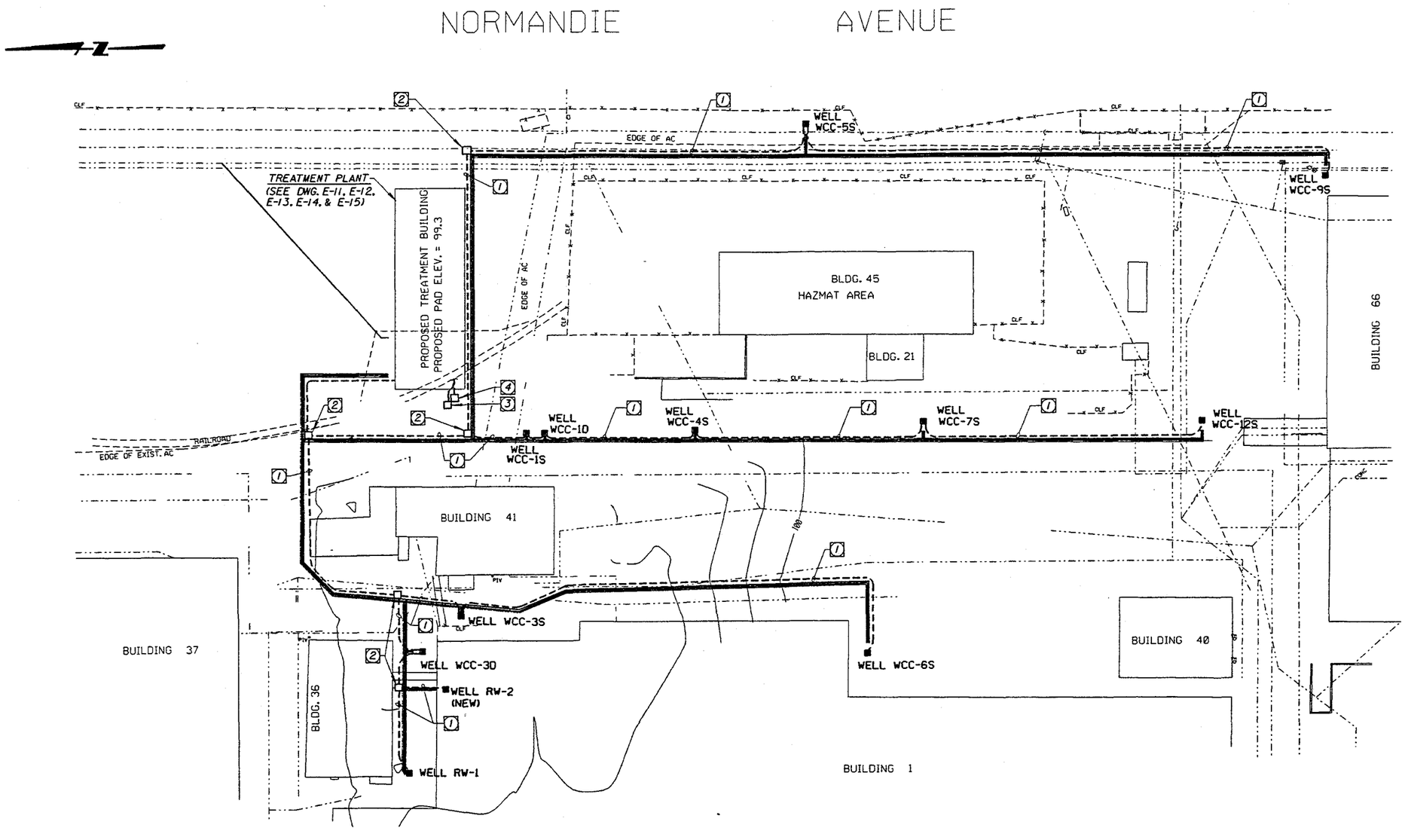

NOTES:

1. 2-1"C.O.
2. 11"x 17 1/8" x 30" DEEP PULLBOX WITH TRAFFIC COVER.
3. 2'x 3' x 3'-6" DEEP PULLBOX WITH TRAFFIC COVER.
4. 4'x 4' x 4' DEEP PULLBOX WITH TRAFFIC COVER.

SCALE: 1"=40'

MCDONNELL DOUGLAS CORPORATION - THIS INFORMATION IS SUBJECT TO DATA RIGHTS LEGENDS AT THE BEGINNING OF THE DOCUMENT.

MONTGOMERY WATSON
Pasadena, California

E-3

R.H.	L.H.	NO REQ	SIZE & DESCRIPTION OF MATERIAL			
DASH NO					SIGNATURE	DATE
SCALE. 1"=40'	LIMITS ON DIM. UNLESS OTHERWISE NOTED. ANGULAR		FRAC. DEC.	ENGR		
				DWN		
FAR NO.			LOCATION	CKD		
				APPVD		
				APPVD		

TITLE SOIL / GROUNDWATER REMEDIAL DESIGN
C-6 TORRANCE FACILITY
ELECTRICAL SITE PLAN

DOUGLAS AIRCRAFT COMPANY
MCDONNELL DOUGLAS CORPORATION
FACILITIES

SHEET OF

BOE-C6-0061220

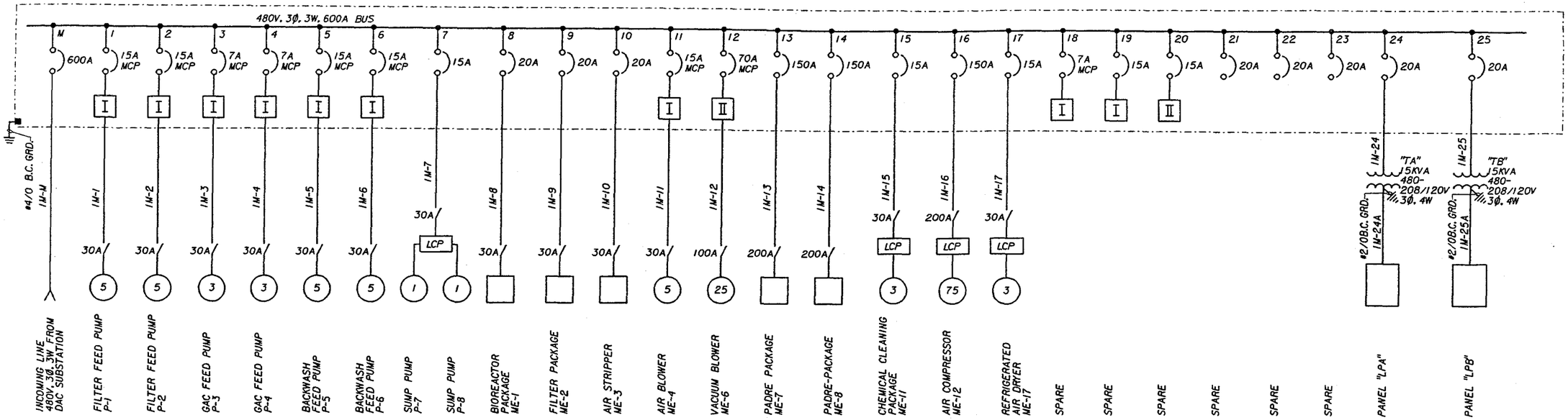

MOTOR CONTROL CENTER "MCC-1M" SINGLE LINE DIAGRAM

LOAD SAMMARY - MOTOR CENTER MCC-1M			
CKT. NO.	DESCRIPTION	CONNECTED HP/KVA	CONNECTED F. L. A.
1	FILTER FEED PUMP P-1	5	7.6
2	FILTER FEED PUMP P-2	5	7.6
3	GAC FEED PUMP P-3	3	4.8
4	GAC FEED PUMP P-4	3	4.8
5	BACKWASH FEED PUMP P-5	5	7.6
6	BACKWASH FEED PUMP P-6	5	7.6
7	SUMP PUMP P-7	1	1.8
	SUMP PUMP P-8	1	1.8
8	BOIREACTORS PACKAGE ME-1		16
9	FILTER PACKAGE ME-2		16
10	AIR STRIPPER ME-3		16
11	AIR BLOWER ME-4	5	7.6
12	VACUUM BLOWER ME-6	25	34
13	PADRE PACKAGE ME-7		125
14	PADRE PACKAGE ME-8		125
15	CHEM. CLEANING PACKAGE ME-11	3	4.8
16	AIR COMPRESSOR ME-12	75	96
17	REFRIGERATED AIR DRYER ME-17	3	4.8
18	SPARE		
19	SPARE		
20	SPARE		
21	SPARE		
22	SPARE		
23	SPARE		
24	15KVA TRANSFORMER	15	18
25	15KVA TRANSFORMER	15	18
TOTAL CONNECTED FULL LOAD AMPS (F. L. A.)			524.8

TOTAL F. L. A. = F. L. A. + 0.25 (LARGEST MOTOR AMPS)
= 524.80 + 0.25 (96)
= 524.80 + 16.25
= 548.8 AMPS

MCDONNELL DOUGLAS CORPORATION - THIS INFORMATION IS SUBJECT TO DATA RIGHTS LEGENDS AT THE BEGINNING OF THE DOCUMENT.

MONTGOMERY WATSON
Pasadena, California

E-4

R.H.	L.H.	NO REQ	SIZE & DESCRIPTION OF MATERIAL
DASH NO			

SCALE. NONE
LIMITS ON DIM. UNLESS OTHERWISE NOTED. FRAC. DEC. ANGULAR
FAR NO. LOCATION
ENGR DWN CKD APPVD APPVD
SIGNATURE DATE

TITLE SOIL / GROUNDWATER REMEDIAL DESIGN
C-6 TORRANCE FACILITY
SINGLE LINE DIAGRAM

DOUGLAS AIRCRAFT COMPANY
MCDONNELL DOUGLAS CORPORATION
FACILITIES
SHEET OF

BOE-C6-0061221

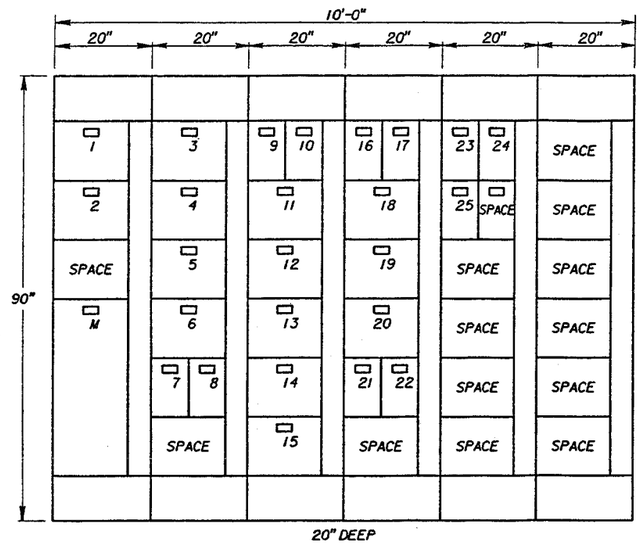

MOTOR CONTROL CENTER "MCC-1M"-ELEVATION

E-5

R.H.	L.H.	NO	SIZE & DESCRIPTION OF MATERIAL
DASH NO		REQ	

SCALE. NONE — LIMITS ON DIM. UNLESS OTHERWISE NOTED. ANGULAR FRAC. DEC. — LOCATION — FAR NO.

	SIGNATURE	DATE
ENGR		
DWN		
CKD		
APPVD		
APPVD		

TITLE SOIL / GROUNDWATER REMEDIAL DESIGN
C-6 TORRANCE FACILITY
EQUIPMENT ELEVATION

DOUGLAS AIRCRAFT COMPANY
MCDONNELL DOUGLAS CORPORATION
FACILITIES

SHEET OF

MCDONNELL DOUGLAS CORPORATION - THIS INFORMATION IS SUBJECT TO DATA RIGHTS LEGENDS AT THE BEGINNING OF THE DOCUMENT.

MONTGOMERY WATSON
Pasadena, California

J: 0.0084 FILE No. H:/PRJ/DOUGLAS/ELE/DAC6E08.DGN
BOE-C6-0061222

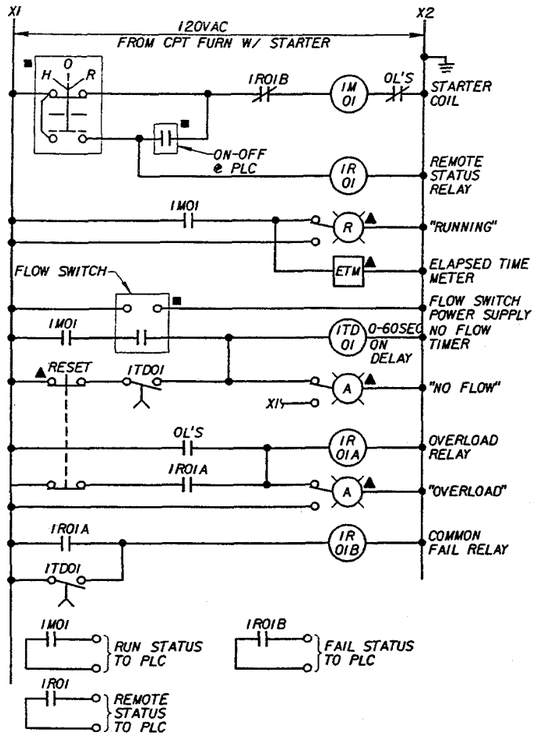

FILTER FEED PUMP P-1

(SIMILAR FOR FILTER FEED PUMP P-2)

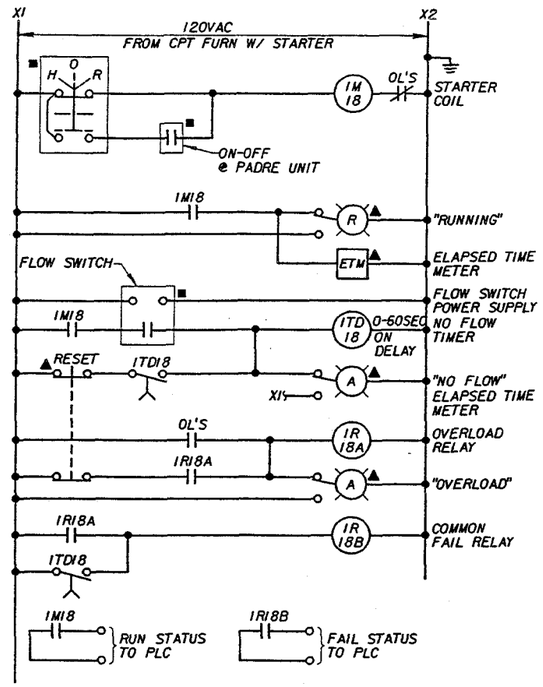

VACUUM BLOWER ME-6

(SIMILAR FOR AIR BLOWER ME-4 EXCEPT ON-OFF & STATUS TO FILTER CONTROL PANEL)

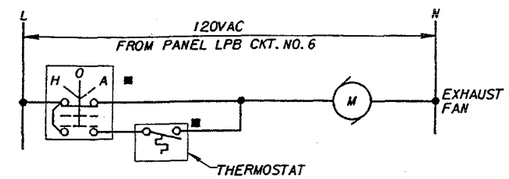

EXHAUST FAN EF-1

(SIMILAR FOR EXHAUST FAN EF-2)

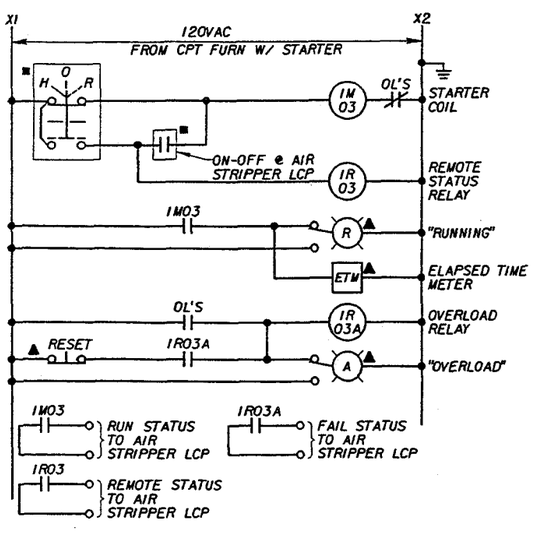

AIR STRIPPER PUMP P-3

(SIMILAR FOR GAC FEED PUMP P-3 & P-4)
(SIMILAR FOR BACKWASH FEED PUMP P-5 & P-6 EXCEPT ON-OFF & STATUS TO FILTER CONTROL PANEL)

E-6

R.H. L.H. DASH NO	NO REQ	SIZE & DESCRIPTION OF MATERIAL

SCALE. NONE	LIMITS ON DIM. UNLESS OTHERWISE NOTED. ANGULAR FRAC. DEC.		SIGNATURE	DATE
FAR NO.	LOCATION	ENGR		
		DWN		
		CKD		
		APPVD		
		APPVD		

TITLE SOIL / GROUNDWATER REMEDIAL DESIGN
C-6 TORRANCE FACILITY
SCHEMATIC DIAGRAMS

DOUGLAS AIRCRAFT COMPANY
MCDONNELL DOUGLAS CORPORATION
FACILITIES

SHEET OF

MCDONNELL DOUGLAS CORPORATION - THIS INFORMATION IS SUBJECT TO DATA RIGHTS LEGENDS AT THE BEGINNING OF THE DOCUMENT.

MONTGOMERY WATSON
Pasadena, California

BOE-C6-0061223

CABLE NO.	CONDUITS NO.	CONDUITS SIZE	CONDUCTORS POWER	CONDUCTORS CONTROL	CONDUCTORS SIGNAL/STATUS	FROM	TO	ROUTE	REMARKS
1M-M	1M-M	2-4"	2SETS OF 3-400KCMIL & 1#2/0GRD			DAC SUBSTATION	MCC-1M		2SET OF CONDUITS & WIRES REQUIRED
1M-1	1M-1	1"	3#12 & 1#12GRD	7#14		MCC-1M	FILTER FEED PUMP P-1		
1M-2	1M-2			7#14			FILTER FEED PUMP P-2		
1M-3	1M-3	3/4"		3#12			GAC FEED PUMP P-3		
1M-4	1M-4			3#12			GAC FEED PUMP P-4		
1M-5	1M-5			3#12			BACKWASH FEED PUMP P-5		
1M-6	1M-6			3#12			BACKWASH FEED PUMP P-6		
1M-7	1M-7						SUMP PUMP P-7 & P-8		
1M-8	1M-8						BIOREACTOR PACKAGE ME-1		
1M-9	1M-9						FILTER PACKAGE ME-2		
1M-10	1M-10						AIR STRIPPER ME-3		
1M-11	1M-11			7#14			AIR BLOWER ME-4		
1M-12	1M-12	1"	3#8 & 1#8GRD	7#14			VACUUM BLOWER ME-6		
1M-13	1M-13	2"	3#1/0 & 1#4GRD				PADRE PACKAGE ME-7		
1M-14	1M-14	2"	3#1/0 & 1#4GRD				PADRE PACKAGE ME-8		
1M-15	1M-15	3/4"	3#12 & 1#12GRD				CHEM. STRIPPER CLEANING PACKAGE ME-9		
1M-16	1M-16	2"	3#1/0 & 1#4GRD				AIR COMPRESSOR ME-12		
1M-17	1M-17	3/4"	3#12 & 1#12GRD				REFRIG. AIR DRYER ME-17		
1M-18	1M-18								NOT USED
1M-19	1M-19								
1M-20	1M-20								
1M-21	1M-21								
1M-22	1M-22								
1M-23	1M-23								
1M-24	1M-24	3/4"	3#12 & 1#12GRD				TRANSFORMER 'TA'		
1M-24A	1M-24A	1 1/2"	4#6 & 1#6GRD			TRANSFORMER 'TA'	PANEL LPA		
1M-25	1M-25	3/4"	3#12 & 1#12GRD			MCC-1M	TRANSFORMER 'TB'		
1M-25A	1M-25A	1 1/2"	4#6 & 1#6GRD			TRANSFORMER 'TB'	PANEL LPB		

CABLE NO.	CONDUITS NO.	CONDUITS SIZE	CONDUCTORS POWER	CONDUCTORS CONTROL	CONDUCTORS SIGNAL/STATUS	FROM	TO	ROUTE	REMARKS
C-1	C-1	1"		20#14		MAIN CONTROL BOARD	P-9, P-10		
C-2	C-2	3/4"		8#14			P-11, P-12		
C-3	C-3				(1)2/C#16SHLD		BIOREACTOR ME-1		
C-4	C-4			8#14			LSH-421, LSHH-421, LSH-422, LSHH-422		
C-5	C-5				(1)2/C#16SHLD		FIT-414		
C-6	C-6			4#14			FS-410 & S.V.		
C-7	C-7			4#14			FSL-402 & 404		
C-8	C-8			10#14			LSL-412, LSHH-412, LSH-412, FS-408		
C-9	C-9				(1)2/C#16SHLD		LIT-413		
C-10	C-10	2-1 1/2"		40#14			FILTER PRESS CONTROL PANEL & LCP		2SET OF CONDUITS & WIRES REQUIRED
C-11	C-11	3/4"		10#14		FILTER PRESS LCP	LSL-501, LSLL-501, LSH-501, LSHH-501, LSL-502		
C-12	C-12			6#14		FILTER PRESS LCP	LSL-511, LSH-511, LSHH-511		
C-13	C-13			10#14		MAIN CONTROL BOARD	SUMP PUMP LCP		
C-14	C-14			2#14			PSL-X		NOT USED
C-15	C-15	1"			(2)2/C#16SHLD		FE-101, FE-123		
C-16	C-16	1"		12#14			BIOREACTOR ME-1		
C-17	C-17	3/4"		8#14			LSH-121, LSHH-121, LSH-X, LSHH-X		
C-18	C-18	3/4"			(1)2/C#16SHLD		LIT-122		
C-19	C-19	1"			(2)2/C#16SHLD		FILTER PRESS CONTROL PANEL		
C-20	C-20	2"		60#14			AIR STRIPPER CONTROL PANEL		
C-21	C-21	3/4"		4#14			SOLENOID VALVES		
C-22	C-22	1 1/2"		30#14			PADRE PACKAGE ME-7		2#14 TO MCC-1M
C-23	C-23	1"			(4)2/C#16SHLD				
C-24	C-24	1 1/2"		30#14			PADRE PACKAGE ME-8		2#14 TO MCC-1M
C-25	C-25	1"			(4)2/C#16SHLD				
C-26	C-26	3/4"		2#14			NITROGEN GENERATOR ME-9		
	C-27								NOT USED
C-28	C-28	1"		24#14			LEAK DETECTOR PANELS		
C-29	C-29	3/4"	2#12 & 1#12GRD				UPS		
C-30	C-30	3/4"		8#14			LSL-601, LSLL601, LSL-611, LSLL-611		
	C-31								NOT USED
C-32	C-32	2-1 1/2"		40#14			MCC-1M		2SET OF CONDUITS & WIRES REQUIRED

E-7

R.H.	L.H.	NO REQ	SIZE & DESCRIPTION OF MATERIAL
DASH NO			

SCALE. NONE

LIMITS ON DIM. UNLESS OTHERWISE NOTED. FRAC. DEC. ANGULAR

FAR NO. LOCATION

	SIGNATURE	DATE
ENGR		
DWN		
CKD		
APPVD		
APPVD		

TITLE SOIL / GROUNDWATER REMEDIAL DESIGN
C-6 TORRANCE FACILITY
CONDUIT AND WIREFILL SCHEDULE

DOUGLAS AIRCRAFT COMPANY
MCDONNELL DOUGLAS CORPORATION
FACILITIES

SHEET OF

MCDONNELL DOUGLAS CORPORATION - THIS INFORMATION IS SUBJECT TO DATA RIGHTS LEGENDS AT THE BEGINNING OF THE DOCUMENT.

MONTGOMERY WATSON
Pasadena, California

BOE-C6-0061224

120/208 VOLTS 3 Φ 4 W — PANELBOARD LPA — FEED TOP
50A-3P MAIN C.B. 100A BUS — LOCATION ELECTRICAL ROOM — MTG SURFACE

LOAD DESCRIPTION	VOLT AMPERE ΦA	ΦB	ΦC	LTG	REC	MIS	CIR	BKR	A B C	BKR	CIR	MIS	REC	LTG	VOLT AMPERE ΦA	ΦB	ΦC	LOAD DESCRIPTION
SITE OFFICE LTG.	900			6			1	20		20	2	3		600				SITE OFFICE REC.
ELECT & CHEM FEED RM LTG		1200		12			3				4	3				600		ELEC RM REC.
COMP & VAC BLOWER RM LTG			1200	12			5				6	3					600	CHEM FEED STD REC.
GAS TREAT CANOPY LTG	1200			12			7				8	6		1200				COMP & VAC BLOWER RM REC
OUTSIDE LTG.		100		1			9				10	4				800		GAS TREAT CANOPY REC.
			300	3			11				12	2					400	OUTSIDE REC.
	1000			4			13				14	2		400				
		750		3			15				16	2				400		TEL BACKBOARD REC.
			500	2			17				18							SPARE
SPARE							19				20							
							21				22							
							23				24							
SPACE							25				26							SPACE
							27				28							
							29				30							
							31				32							
							33				34							
							35				36							
							37				38							
							39				40							
							41				42							
	3100	2050	2000				TOTAL			TOTAL					2200	1800	1000	
	PHASE TOTAL			TOTAL LOAD														
	5300	3850	3000	12.15 KVA (33.7AMP)														

120/208 VOLTS 3 Φ 4 W — PANELBOARD LPB — FEED TOP
50A-3P MAIN C.B. 100A BUS — LOCATION ELECTRICAL ROOM — MTG SURFACE

LOAD DESCRIPTION	VOLT AMPERE ΦA	ΦB	ΦC	LTG	REC	MIS	CIR	BKR	A B C	BKR	CIR	MIS	REC	LTG	VOLT AMPERE ΦA	ΦB	ΦC	LOAD DESCRIPTION
POTASSIUM PERMANGANATE FEEDER FD-1	670					1	1	20		20/2P	2		1		1356			ROOM AIR CONDITIONER AC-1
SODIUM HYPOCHLORITE FEEDER FD-2		670				1	3				4					1356		
TANK 7 MIXER			500		1		5			20	6	1					670	FAN F-1
TANK 8 MIXER	500				1		7				8	1			670			FAN F-2
DRUM PUMP		500			1		9				10	1				100		LIT-413
TANK 9 MIXER			500		1		11				12	1					200	FILTER PRESS LCP
GAC ME-5	100					1	13				14	1			100			LIT-122
RTU		200				1	15				16	1				1000		UPS
LEAK DETECTOR PANELS & FIRE ALARM PANEL			300			3	17				18							SPARE
SPARE							19				20							
							21				22							
							23				24							
							25				26							
							27				28							
							29				30							
SPACE							31				32							SPACE
							33				34							
							35				36							
							37				38							
							39				40							
							41				42							
	1270	1370	1300				TOTAL			TOTAL					2126	2456	870	
	PHASE TOTAL			TOTAL LOAD														
	3396	3826	2170	9.392 KVA (26 AMP)														

FIXTURE SCHEDULE

TYPE	LAMP	VOLTS	DESCRIPTION
F1	3/32W T-8	120V	2'x4' RECESSED FLUORESCENT LIGHT FIXTURE. HOUSING OF DIE FORMED, HEAVY GAUGE STEEL WITH HINGED FLUSH ALUMINUM DOOR FRAME AND PRISMATIC ACRYLIC LENS. WHITE BAKED ENAMEL FINISH. PRUDENTIAL CAT. # P-8623-48RS-PRA OR EQUAL.
F2	2/32W T-8	120V	4' INDUSTRIAL FLUORESCENT LIGHT FIXTURE. HOUSING OF DIE FORMED, HEAVY GAUGE STEEL AND HIGH-REFLECTANCE WHITE BAKED ENAMEL FINISH. PRUDENTIAL CAT. # P-202-48RS OR EQUAL.
F3	2/32W T-8	120V	4' ENCLOSED FLUORESCENT LIGHT FIXTURE, SUITABLE FOR CORROSIVE AREA, FIBERGLASS HOUSING WITH ACRYLIC DIFFUSER. PRUDENTIAL CAT. # P-5362-48RS-PTS OR EQUAL.
F4	2/32W T-8	120V	4' ENCLOSED AND GASKETED FLUORESCENT LIGHT FIXTURE, SUITABLE FOR CLASS I DIV. 2 LOCATION, 20-GAUGE STEEL HOUSING, TEMPERED GLASS LENS, HOUSING FINISH OF CORROSION RESISTANT WHITE POLYYESTER POWDER COAT. CROUSE-HINDS CAT. # FVN24 OTG OR EQUAL.
H1	100W MV	120V	MERCURY VAPOR (MV), WALL MOUNTING TYPE, INTEGRAL BALLAST. OUTDOOR WEATHERPROOF TYPE, DIE CAST ALUMINUM HOUSING, TEXTURED BRONZE, THERMAL SHOCK RESISTANT, PRISMATIC GLASS REFRACTOR. HOLOPHANE CAT. # WP-1-A-100MV-12-BZ-F1 OR EQUAL.
H2	250W MH	120V	HEAVY DUTY FLOODLIGHT, SUITABLE FOR CLASS I DIV. 2 AREA. DIE-CAST ALUMINUM HOUSING, TEMPERED GLASS LENS AND ANODIZED REFLECTOR. FIXTURE PROVIDED WITH MOUNTING BRACKET. HOLOPHANE CAT. # PF250MH12BN2BF1 OR EQUAL.
H3	2-250W MH	120V	SAME AS TYPE "H2" EXCEPT WITH 2 FIXTURES. HOLOPHANE CAT. # PF250MH12BN1BF1 OR EQUAL.
H4	250W MH	120V	SAME AS TYPE "H2" EXCEPT WITH 20FT ROUND TAPERED STEEL POLE. HOLOPHANE CAT. # PF250MH12BN1BF1 OR EQUAL. & POLE ASPRT205/1.

E-8

R.H. L.H. DASH NO	NO REQ	SIZE & DESCRIPTION OF MATERIAL		
SCALE. NONE	LIMITS ON DIM. UNLESS OTHERWISE NOTED. ANGULAR FRAC. DEC.		SIGNATURE	DATE
FAR NO.	LOCATION	ENGR / DWN / CKD / APPVD / APPVD		

TITLE SOIL / GROUNDWATER REMEDIAL DESIGN
C-6 TORRANCE FACILITY
PANEL AND FIXTURE SCHEDULE

DOUGLAS AIRCRAFT COMPANY
MCDONNELL DOUGLAS CORPORATION
FACILITIES

SHEET OF

MCDONNELL DOUGLAS CORPORATION - THIS INFORMATION IS SUBJECT TO DATA RIGHTS LEGENDS AT THE BEGINNING OF THE DOCUMENT.

MONTGOMERY WATSON
Pasadena, California

BOE-C6-0061225

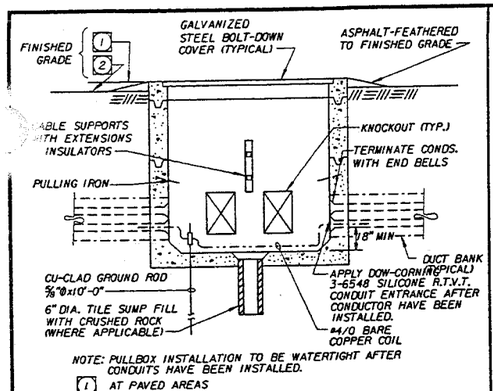

NOTE: PULLBOX INSTALLATION TO BE WATERTIGHT AFTER CONDUITS HAVE BEEN INSTALLED.

1 AT PAVED AREAS

2 AT PARKWAYS

TYPICAL PULLBOX — E-102

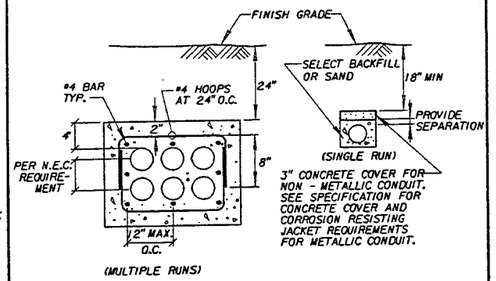

NOTE: COLOR OF CONCRETE ENCASEMENT PER SPECS. SEE DRAWINGS FOR ACTUAL NUMBER AND SIZES OF CONDUITS.

TYPICAL DUCT BANK (POWER) — E-103

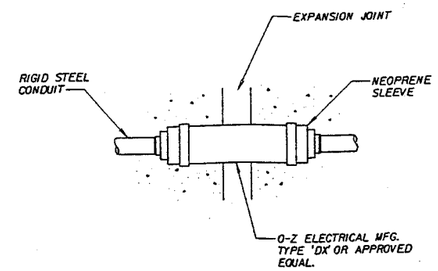

NOTE:
PROVIDE EXTERNAL BONDING JUMPER WHEN COUPLING HAS NO INTERIOR JUMPER.

EXPANSION COUPLING — E-204

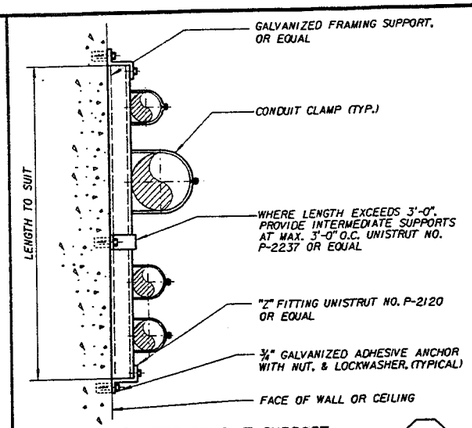

WALL MOUNTED CONDUIT SUPPORT — E-212

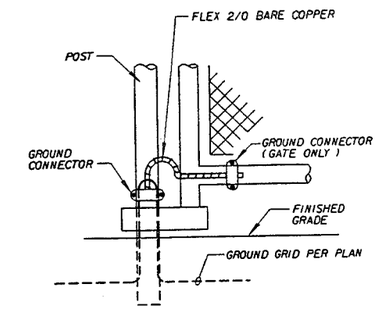

FENCE GATE GROUNDING — E-304

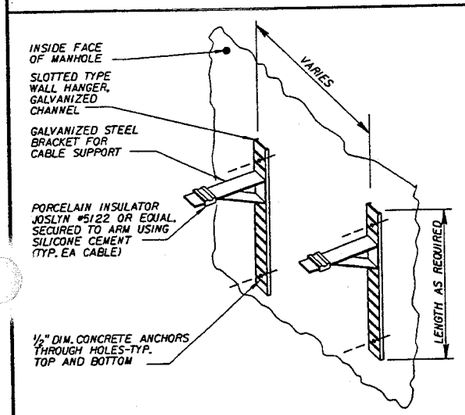

CABLE ROCK DETAIL — 102A

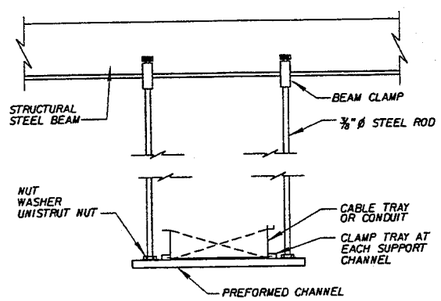

TRAY OR CONDUIT HANGER — E-202

SPACING OF TRAY SUPPORTS SHALL BE NO MORE THAN MANUFACTURERS RECOMMENDATIONS AS SUBMITTED AND APPROVED BY ENGINEER.

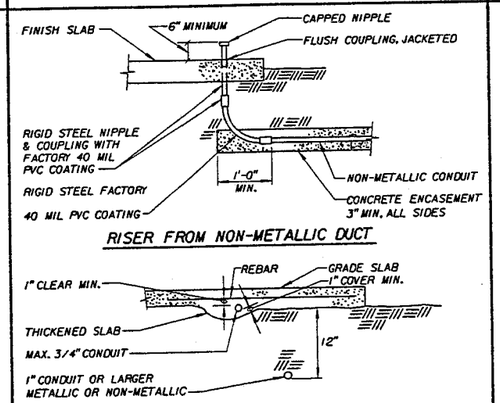

CONDUIT PLACEMENT — E-205

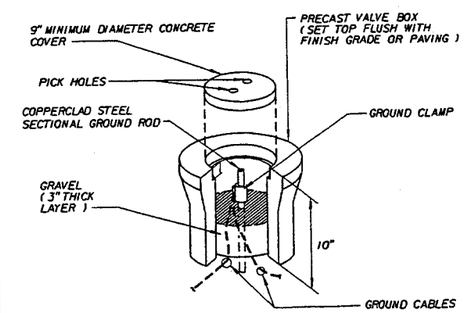

GROUND ROD INSTALLATION — E-302

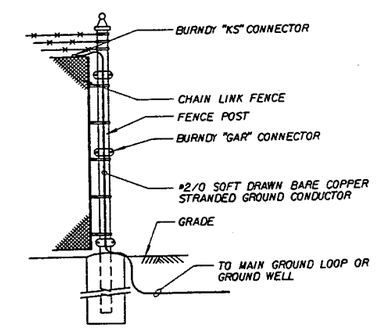

FENCE GROUNDING — E-305

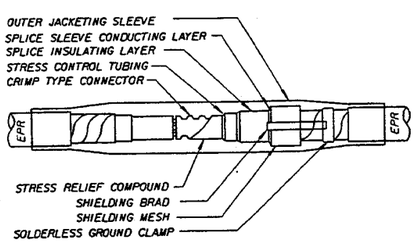

15KV CABLE SPLICE — 102B

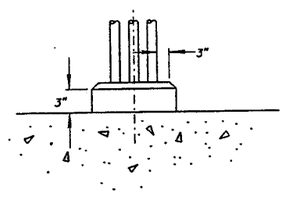

HOUSEKEEPING CURB REQUIRED, AT ALL INTERIOR WALL LOCATIONS FOR SINGLE & MULTIPLE RISERS. RISERS SHALL BE GROUPED SO THAT SINGLE RISERS ARE SIX FT. APART MINIMUM.

CONCRETE HOUSEKEEPING CURB — E-203

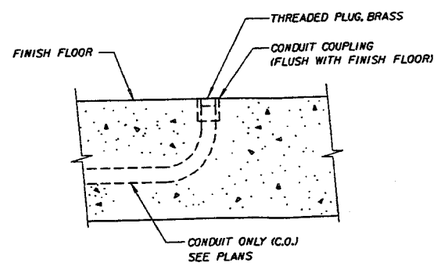

CONDUIT TERMINATION FOR FUTURE EQUIPMENT — E-206

E-9

R.H. L.H. DASH NO	NO REQ	SIZE & DESCRIPTION OF MATERIAL			
SCALE. NONE	LIMITS ON DIM. UNLESS OTHERWISE NOTED. ANGULAR	FRAC. DEC.		SIGNATURE	DATE
FAR NO.		LOCATION	ENGR		
			DWN		
			CKD		
			APPVD		
			APPVD		

TITLE SOIL / GROUNDWATER REMEDIAL DESIGN
C-6 TORRANCE FACILITY
ELECTRICAL STANDARD DETAILS - 1

DOUGLAS AIRCRAFT COMPANY
MCDONNELL DOUGLAS CORPORATION
FACILITIES

SHEET OF

MCDONNELL DOUGLAS CORPORATION - THIS INFORMATION IS SUBJECT TO DATA RIGHTS LEGENDS AT THE BEGINNING OF THE DOCUMENT.

MONTGOMERY WATSON
Pasadena, California

JOB 10084 FILE No. H:/PHJ/UUUULA3/ELE/UALDEU3AUN

BOE-C6-0061226

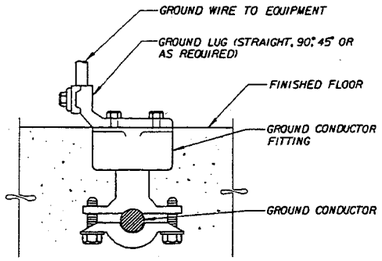

NOTE:
BOLTS SHALL BE INSERTED IN BOLT HOLES BEFORE CONNECTOR IS EMBEDDED.

GROUNDING INSERT — E-308

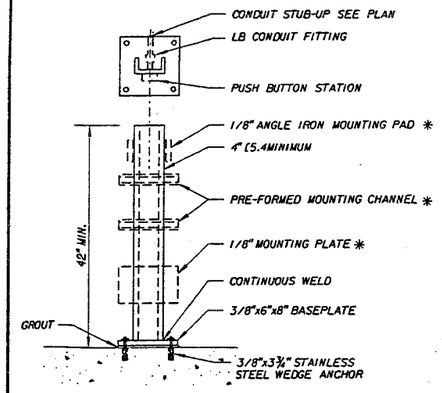

EQUIPMENT MOUNTING STAND — E-405

* PROVIDE MOUNTING ACCESSORY TO SUIT EQUIPMENT
STEEL CONSTRUCTION, HOT-DIPPED GALVANIZED AFTER CONSTRUCTION.

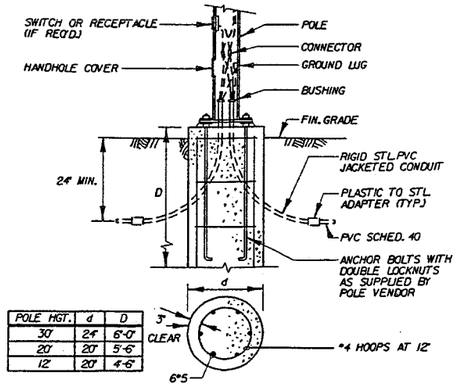

POLE HGT.	d	D
30'	24"	6'-0"
20'	20"	5'-6"
12'	20"	4'-6"

LIGHTING POLE FOUNDATION — E-600

NOTE: EXPOSED FOUNDATION CAPS SHALL BE FORMED TO MATCH THE OUTLINE OF POLE BASEPLATE.

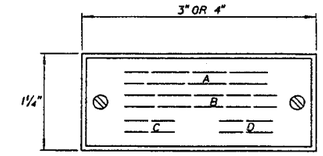

1. ALL LETTERS ARE 1/4" IF NOT NOTED OTHERWISE.
2. ALL NAMEPLATES TO BE MOUNTED ON VERTICAL CENTER LINE OF THEIR CUBICLE OR DEVICE.
3. ATTACH ALL NAMEPLATES WITH BRASS SCREWS.
4. PROVIDE BLANK NAMEPLATES FOR ALL SPARE AND FUTURE CIRCUITS.

NAMEPLATE — E-708

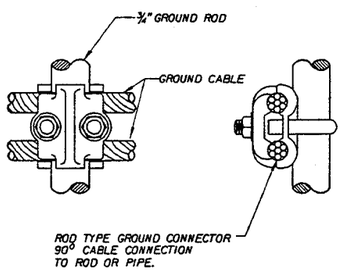

CABLE TO ROD CONNECTION — E-309

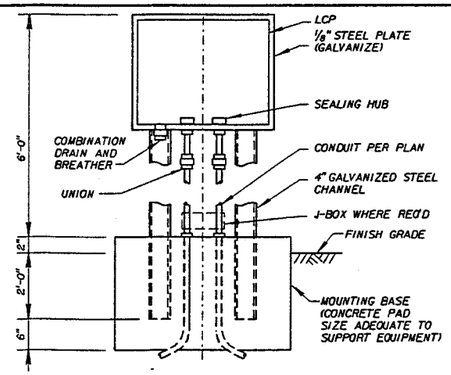

1. 1.LOCAL CONTROL PANEL SHALL MEET ENVIROMENT CONDITIONS.
2. NO. AND SIZE OF CONDUITS PER PLAN DWGS.

LOCAL CONTROL PANEL INSTALLATION — E-418

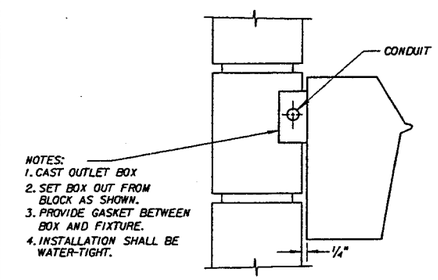

NOTES:
1. CAST OUTLET BOX
2. SET BOX OUT FROM BLOCK AS SHOWN.
3. PROVIDE GASKET BETWEEN BOX AND FIXTURE.
4. INSTALLATION SHALL BE WATER-TIGHT.

WALL HUNG FIXTURE MOUNTING — E-605

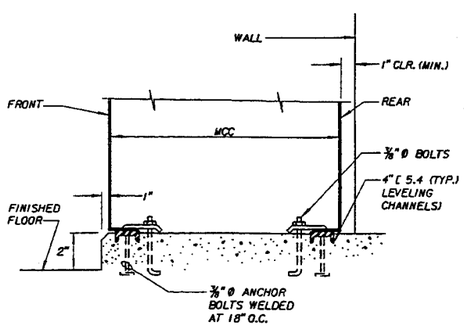

SWITCHBOARD (MCC) MOUNTING — E-400

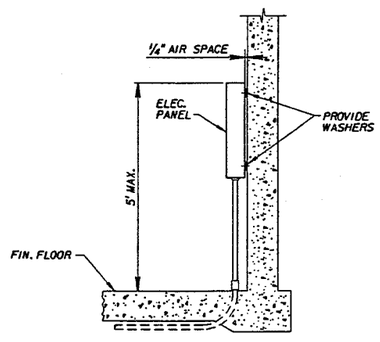

PANEL MOUNTING DETAIL — E-432

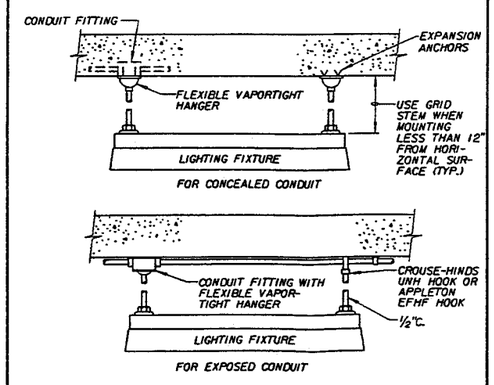

FIXTURE MOUNTING DETAIL — E-614

E-10

R.H.	L.H.	NO REQ	SIZE & DESCRIPTION OF MATERIAL
DASH NO			

SCALE.	LIMITS ON DIM. UNLESS OTHERWISE NOTED.			SIGNATURE	DATE
NONE	ANGULAR	FRAC. DEC.	ENGR		
FAR NO.		LOCATION	DWN		
			CKD		
			APPVD		
			APPVD		

TITLE SOIL / GROUNDWATER REMEDIAL DESIGN
C-6 TORRANCE FACILITY
ELECTRICAL STANDARD DETAILS - II

DOUGLAS AIRCRAFT COMPANY
MCDONNELL DOUGLAS CORPORATION
FACILITIES

SHEET OF

MONTGOMERY WATSON
Pasadena, California

MCDONNELL DOUGLAS CORPORATION - THIS INFORMATION IS SUBJECT TO DATA RIGHTS LEGENDS AT THE BEGINNING OF THE DOCUMENT.

FILE NO.

BOE-C6-0061227

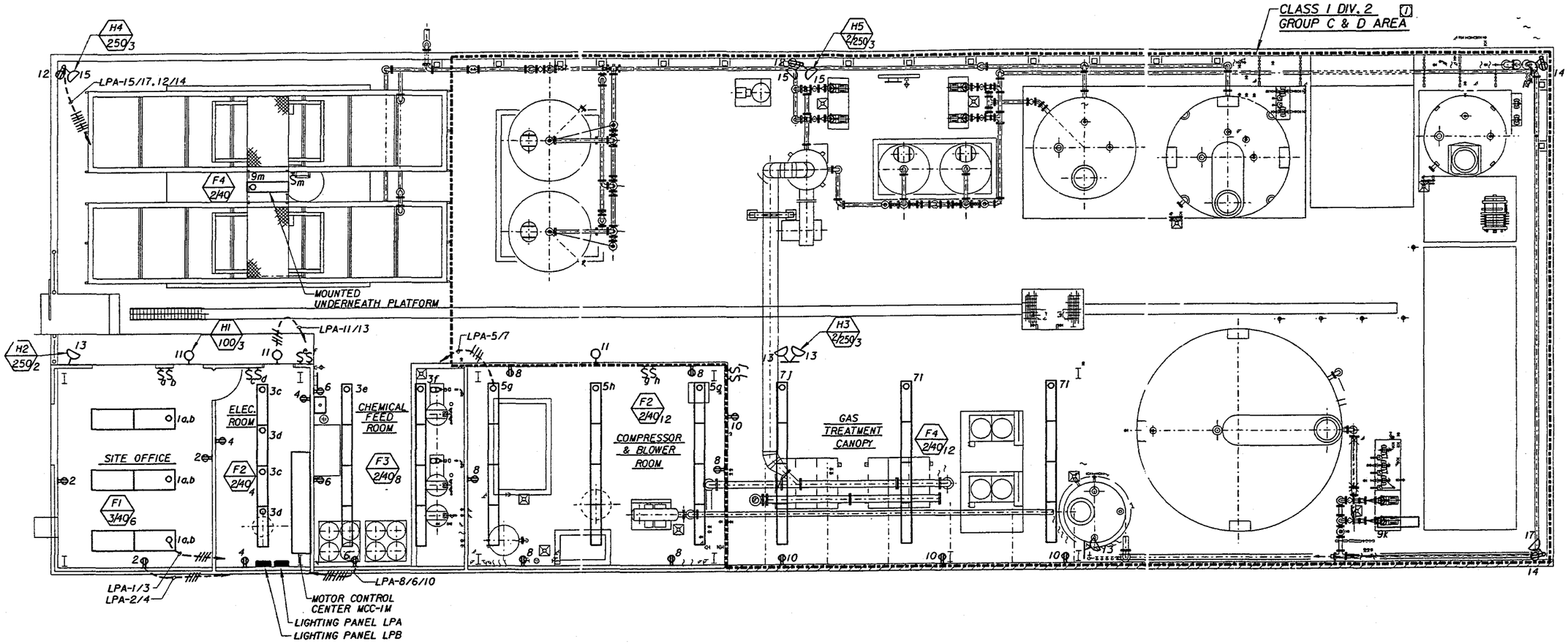

NOTES:

[1] ALL ELECTRICAL INSTALLATION AND EQUIPMENT IN THIS AREA SHALL BE SUITABLE FOR CLASS I, DIV.2 GROUP C & D AREA AND SHALL MEET THE REQUIREMENTS OF N.E.C. ARTICLE 500 & 501.

E-11

R.H.	L.H.	NO REQ	SIZE & DESCRIPTION OF MATERIAL
DASH NO			

SCALE. 3/16" = 1'-0"

LIMITS ON DIM. UNLESS OTHERWISE NOTED. ANGULAR FRAC. DEC.

FAR NO. LOCATION

	SIGNATURE	DATE
ENGR		
DWN		
CKD		
APPVD		
APPVD		

TITLE SOIL / GROUNDWATER REMEDIAL DESIGN
C-6 TORRANCE FACILITY
LIGHTING AND RECEPTACLE PLAN

DOUGLAS AIRCRAFT COMPANY
MCDONNELL DOUGLAS CORPORATION
FACILITIES

SHEET OF

MCDONNELL DOUGLAS CORPORATION - THIS INFORMATION IS SUBJECT TO DATA RIGHTS LEGENDS AT THE BEGINNING OF THE DOCUMENT.

MONTGOMERY WATSON
Pasadena, California

FILE No.
BOE-C6-0061228

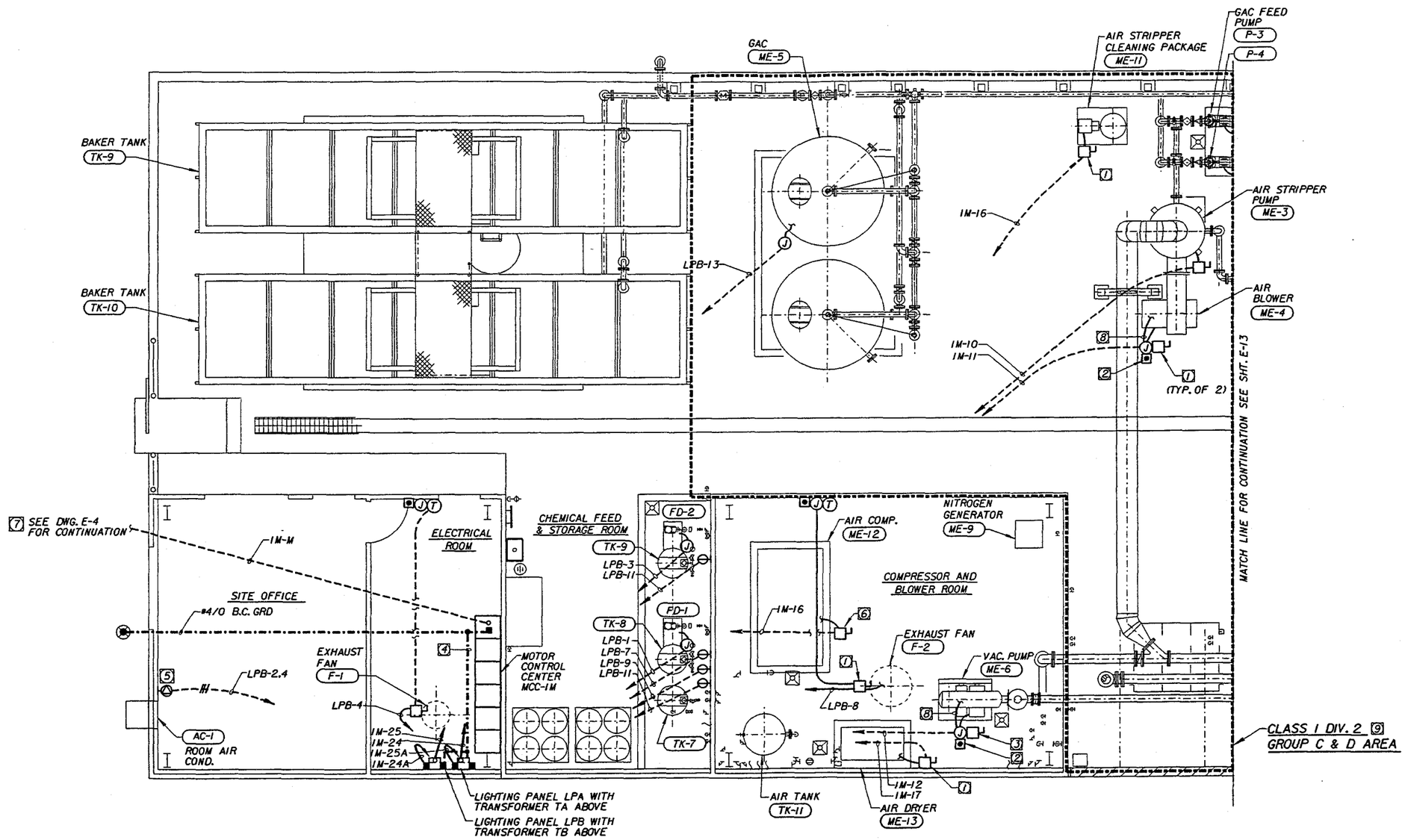

NOTES:

1. 30A, 3P, 480V DISCONNECT SWITCH.
2. HAND-OFF-AUTO SELECTOR SWITCH.
3. 100A, 3P, 480V DISCONNECT SWITCH.
4. #2/0 B.C. GRD.
5. 20A, 240 REC.
6. 200A, 3P, 480V DISCONNECT SWITCH.
7. TO 4'x4' PULLBOX.
8. 3/4"C-4#14 TO FLOW SWITCH.
9. ALL ELECTRICAL INSTALLATION AND EQUIPMENT IN THIS AREA SHALL BE SUITABLE FOR CLASS I, DIV.2 GROUP C & D AREA AND SHALL MEET THE REQUIREMENTS OF N.E.C. ARTICLE 500 & 501.

E-12

R.H.	L.H.	NO REQ	SIZE & DESCRIPTION OF MATERIAL
DASH NO			

SCALE.	LIMITS ON DIM. UNLESS OTHERWISE NOTED.			SIGNATURE	DATE
1/4"=1'-0"	ANGULAR	FRAC. DEC.	ENGR		
			DWN		
FAR NO.	LOCATION		CKD		
			APPVD		
			APPVD		

MCDONNELL DOUGLAS CORPORATION - THIS INFORMATION IS SUBJECT TO DATA RIGHTS LEGENDS AT THE BEGINNING OF THE DOCUMENT.

MONTGOMERY WATSON
Pasadena, California

TITLE SOIL / GROUNDWATER REMEDIAL DESIGN
C-6 TORRANCE FACILITY
POWER AND CONTROL PLAN-WEST SIDE

DOUGLAS AIRCRAFT COMPANY
MCDONNELL DOUGLAS CORPORATION
FACILITIES

SHEET OF

FILE No.

BOE-C6-0061229

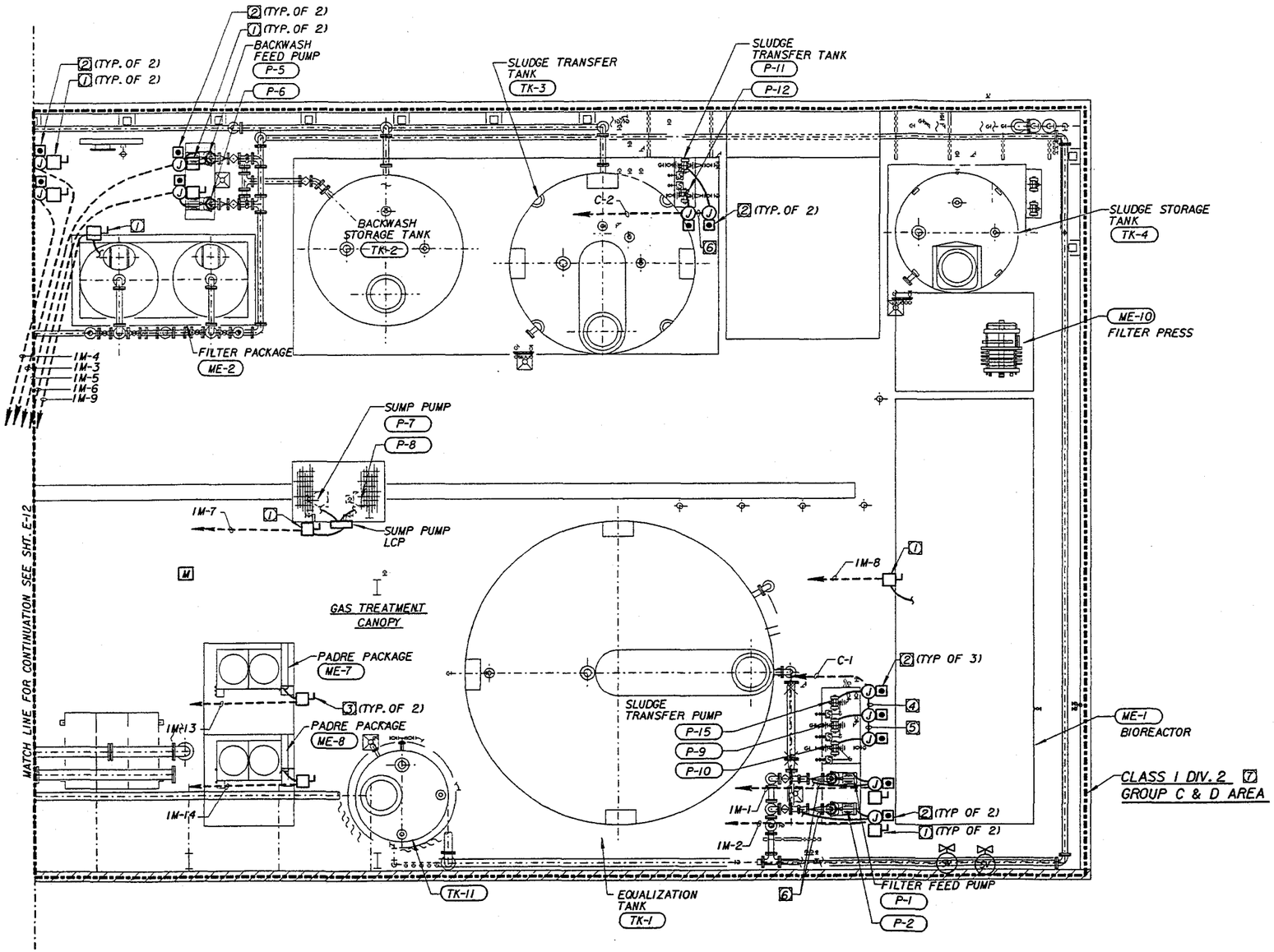

NOTES:

1. 30A, 3P, 480V DISCONNECT SWITCH.
2. HAND-OFF-AUTO SELECTOR SWITCH.
3. 200A, 3P, 480V DISCONNECT SWITCH.
4. 3/4"C-4#14
5. 3/4"C-8#14
6. 3/4"C-4#14 TO FLOW SWITCH.
7. ALL ELECTRICAL INSTALLATION AND EQUIPMENT IN THIS AREA SHALL BE SUITABLE FOR CLASS 1, DIV.2 GROUP C & D AREA AND SHALL MEET THE REQUIREMENTS OF N.E.C. ARTICLE 500 & 501.

E-13

R.H.	L.H.	NO REQ	SIZE & DESCRIPTION OF MATERIAL
DASH NO			

SCALE. 1/4"=1'-0"

LIMITS ON DIM. UNLESS OTHERWISE NOTED. FRAC. DEC. ANGULAR

FAR NO.

LOCATION

	SIGNATURE	DATE
ENGR		
DWN		
CKD		
APPVD		
APPVD		

TITLE SOIL / GROUNDWATER REMEDIAL DESIGN
C-6 TORRANCE FACILITY
POWER AND CONTROL PLAN-EAST SIDE

DOUGLAS AIRCRAFT COMPANY
MCDONNELL DOUGLAS CORPORATION
FACILITIES

SHEET OF

MCDONNELL DOUGLAS CORPORATION - THIS INFORMATION IS SUBJECT TO DATA RIGHTS LEGENDS AT THE BEGINNING OF THE DOCUMENT.

MONTGOMERY WATSON
Pasadena, California

FILE NO.

BOE-C6-0061230

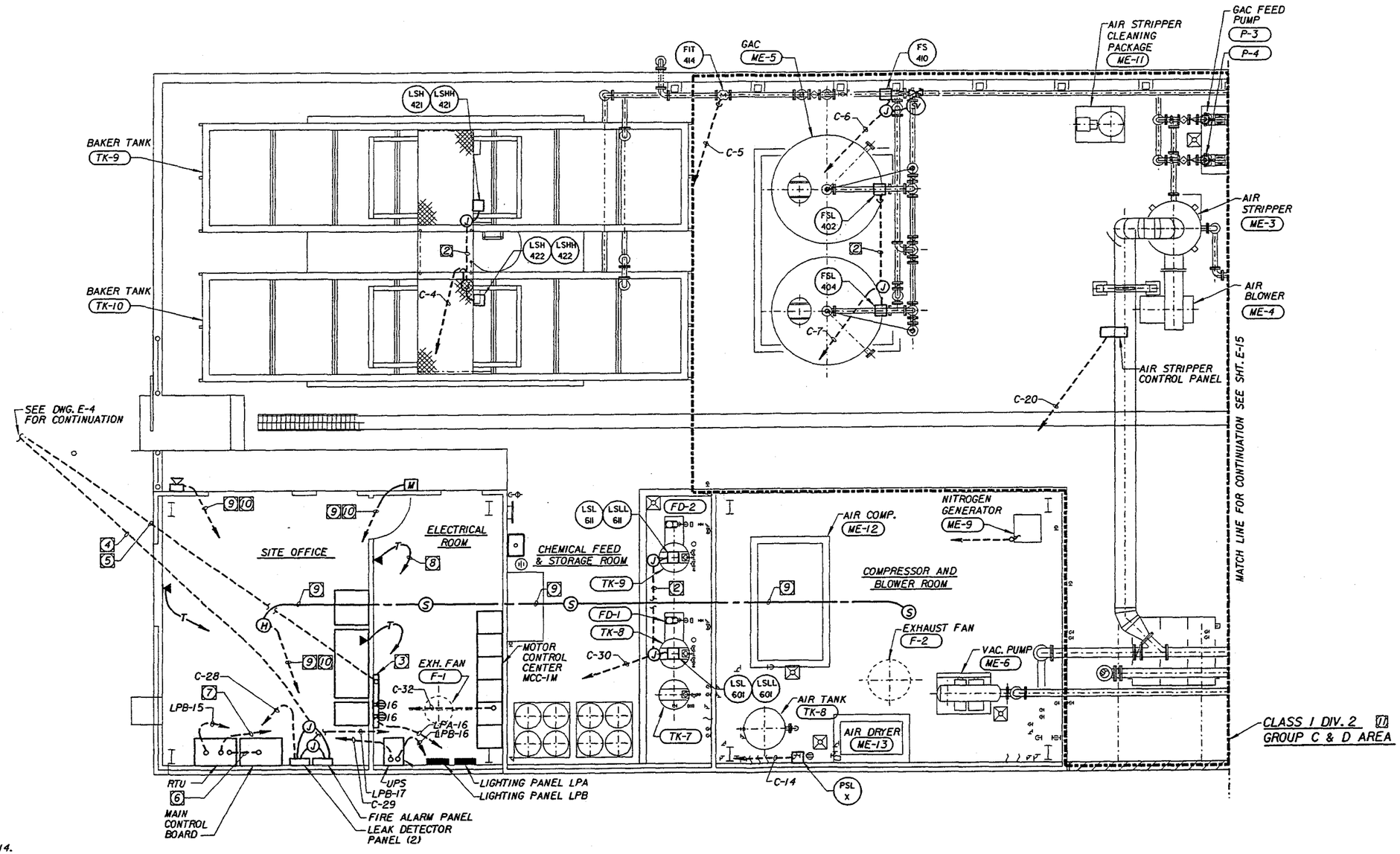

NOTES:

1. 3/4"C-2#14.
2. 3/4"C-4#14.
3. 4'x4'x3/4" TELEPHONE BACKBOARD.
4. 1"C-8#14 TO 2'x3' PULLBOX.
5. 1"C-10PAIRS OF TEL.WIRES TO 2'x3' PULLBOX.
6. 1"C-(2)2/C#16SHLD.
7. 1"C-2PAIRS OF TEL. WIRES TO TEL. BACKBOARD.
8. TO TEL. BACKBOARD (TYP.)
9. 3/4"C WITH CABLE FURNISHED BY FIRE ALARM SUPPLIER.
10. TO FIRE ALARM PANEL.
11. ALL ELECTRICAL INSTALLATION AND EQUIPMENT IN THIS AREA SHALL BE SUITABLE FOR CLASS I, DIV.2 GROUP C & D AREA AND SHALL MEET THE REQUIREMENTS OF N.E.C. ARTICLE 500 & 501.

E-14

R.H. L.H.	NO REQ	SIZE & DESCRIPTION OF MATERIAL
DASH NO		

SCALE.	LIMITS ON DIM. UNLESS OTHERWISE NOTED. ANGULAR FRAC. DEC.		SIGNATURE	DATE
		ENGR		
		DWN		
FAR NO.	LOCATION	CKD		
		APPVD		
		APPVD		

TITLE SOIL / GROUNDWATER REMEDIAL DESIGN
C-6 TORRANCE FACILITY
INSTRUMENTATION PLAN-WEST SIDE

DOUGLAS AIRCRAFT COMPANY
MCDONNELL DOUGLAS CORPORATION
FACILITIES

SHEET OF

MCDONNELL DOUGLAS CORPORATION - THIS INFORMATION IS SUBJECT TO DATA RIGHTS LEGENDS AT THE BEGINNING OF THE DOCUMENT.

MONTGOMERY WATSON
Pasadena, California

FILE No. H:/PRJ/DOUGLAS/ELE/
JOB 0084
BOE-C6-0061231

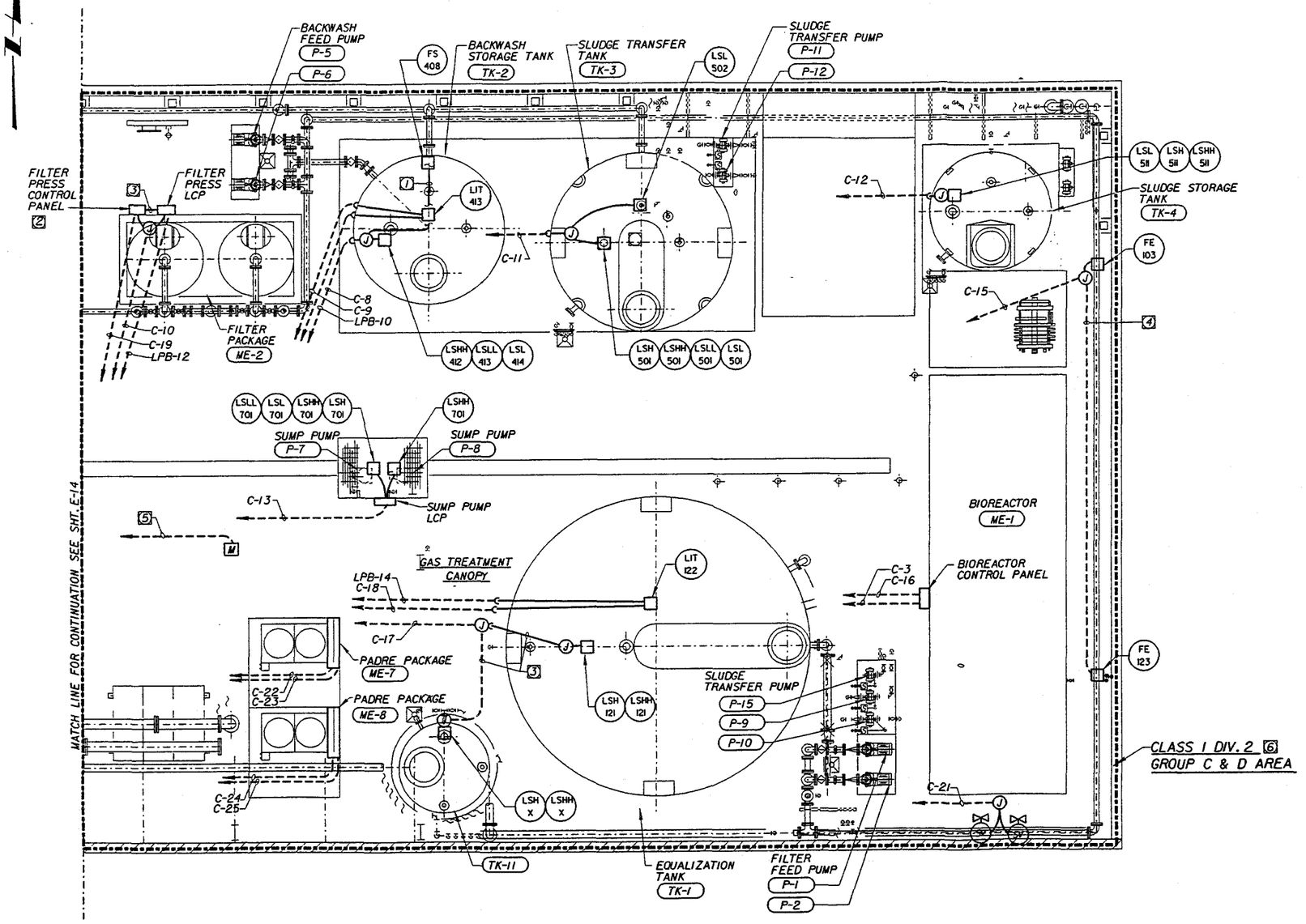

NOTES:

1. 3/4"C-2#14
2. FURNISHED BY FILTER MANUFACTURER.
3. 3/4"C-4#14
4. 3/4"C-(1)2/C#16SHLD.
5. 3/4"C WITH CABLE FURNISHED BY FIRE ALARM SUPPLIER TO FIRE ALARM.
6. ALL ELECTRICAL INSTALLATION AND EQUIPMENT IN THIS AREA SHALL BE SUITABLE FOR CLASS I, DIV.2 GROUP C & D AREA AND SHALL MEET THE REQUIREMENTS OF N.E.C. ARTICLE 500 & 501.

E-15

R.H. L.H.	NO REQ	SIZE & DESCRIPTION OF MATERIAL
DASH NO		

SCALE.	LIMITS ON DIM. UNLESS OTHERWISE NOTED.			SIGNATURE	DATE
1/4"=1'-0"	ANGULAR	FRAC. DEC.	ENGR		
FAR NO.		LOCATION	DWN		
			CKD		
			APPVD		
			APPVD		

TITLE SOIL / GROUNDWATER REMEDIAL DESIGN
C-6 TORRANCE FACILITY
INSTRUMENTATION PLAN-EAST SIDE

DOUGLAS AIRCRAFT COMPANY
MCDONNELL DOUGLAS CORPORATION
FACILITIES

SHEET OF

MCDONNELL DOUGLAS CORPORATION - THIS INFORMATION IS SUBJECT TO DATA RIGHTS LEGENDS AT THE BEGINNING OF THE DOCUMENT.

MONTGOMERY WATSON
Pasadena, California

FILE No. H:/PRJ/DOUGLAS/ELE/DAC6E15.DGN
JOB 0.0084
BOE-C6-0061232