BOEING REALTY CORPORATION
FORMER BLDG. 1/36

PILOT BIORECIRCULATION TEST

1451 KNOX STREET, LOS ANGELES, CALIFORNIA 90501

APRIL 2007

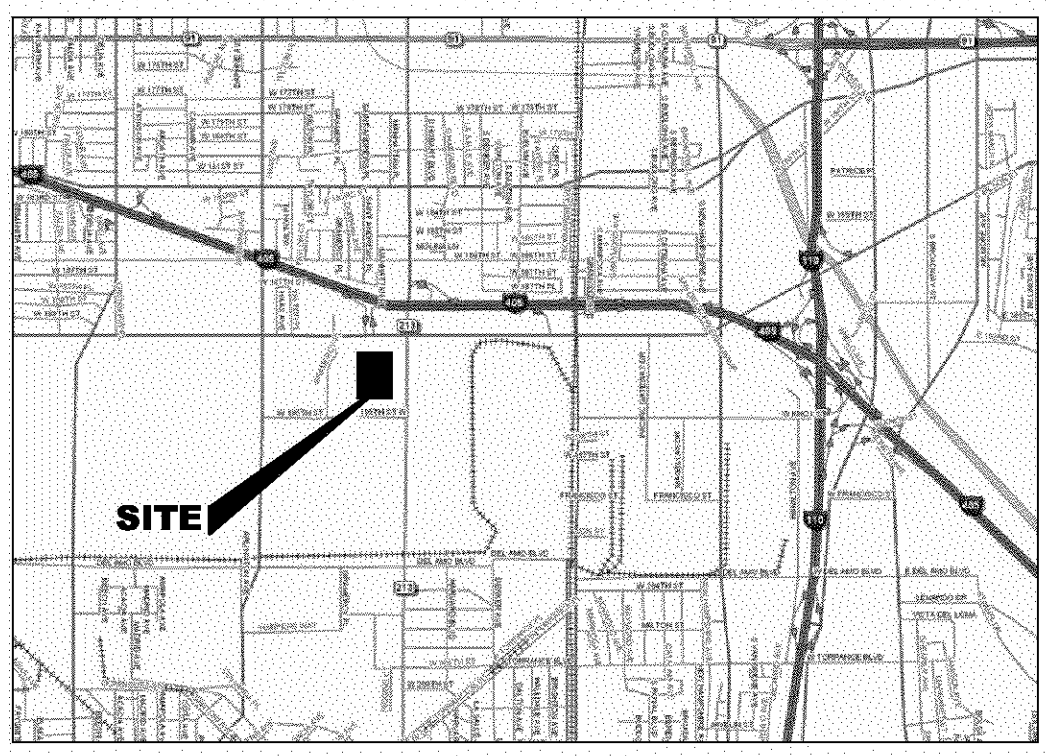

LOCATION MAP

350 0 700
FEET

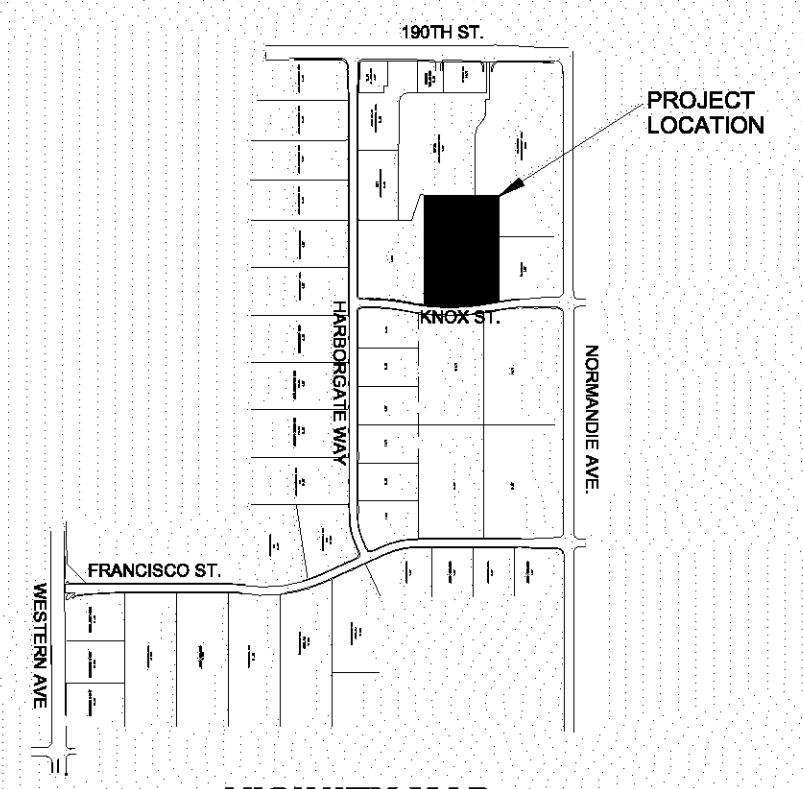

VICINITY MAP

0 1 2 3 4 5
MILES

DRAWING LIST

GENERAL

G-1 TITLE SHEET, VICINITY MAP, DRAWING LIST

CIVIL

C-1 SITE PLAN
C-2 COMPOUND LAYOUT AND DETAILS
C-3 CIVIL DETAILS

INSTRUMENTATION

I-1 PROCESS AND INSTRUMENTATION DIAGRAM (1 OF 2)
I-2 PROCESS AND INSTRUMENTATION DIAGRAM (2 OF 2)

ELECTRICAL

E-1 ELECTRICAL SITE PLAN
E-2 ONE LINE DIAGRAM

NORTHWIND DRAWINGS (WHEY)

M-1 SYSTEM LAYOUT-WHEY MIXING TRAILER

CAMP DRESSER & McKEE INC.

100% DESIGN SUBMITTAL

CDM Camp Dresser & McKee Inc.
consulting engineering construction operations
16581 Teller Avenue, Suite 200
Irvine, California 92612
Tel: (949) 752-5452
Fax: (949) 752-1307

BOE-C6-0054010
P:\27355\Sunrider-infor\ G-1-CVSTH 04/02/07 10:53 riehlepj

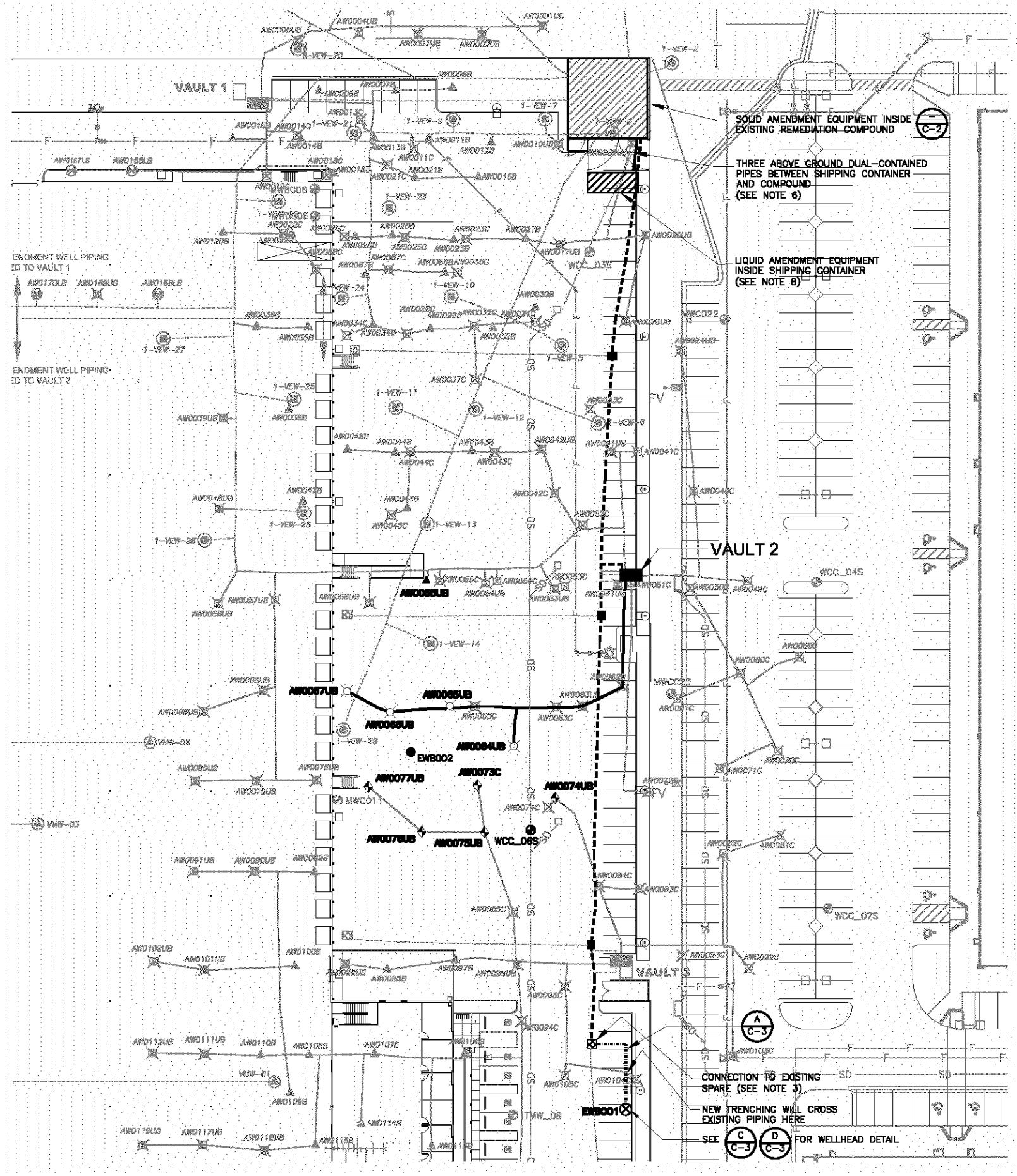

LEGEND:

WCC_065	GROUNDWATER MONITORING WELL USED AS GROUP B MONITORING WELL
EWB001	B-SAND EXTRACTION WELL
AW0055UB	CONVERTED GROUP D UPGRADIENT WELL (UPPER B-SAND, SEE NOTE 4) B C-3
AW0067UB	GROUP A AMENDMENT WELL (UPPER B-SAND, SEE NOTE 4) B C-3
AW0077UB	CONVERTED GROUP B MONITORING WELL (UPPER B-SAND, SEE NOTE 4) B C-3
EWB002	NEW GROUP B MONITORIN WELL (UPPER B-SAND, SIZED AS FUTURE EXTRACTION WELL)
VAULT 2 / VAULT 3 AND	FLUSH MOUNTED VAULT FOR SUBSURFACE REMEDIATION PIPING
AND	LOCATION OF NEW FLUSH MOUNTED VAULT FOR ELECTRICAL CONDUIT AND SUPPLEMENTARY REMEDIATION PIPING
AND	SUBSURFACE CONSTRUCTION STUB-OUT BOX IN SUPPORT OF FUTURE EXTRACTION WELLS (SUPPLEMENTAL REMEDIATION PIPING)
AND	SUBSURACE CONSTRUCTION STUB-OUT BOX IN SUPPORT OF FUTURE EXTRACTION WELLS (FUTURE GROUNDWATER EXTRACTION PIPE AND ELECTRICAL CONDUIT)
	NEW EXTRACTION PIPING TRENCH (SEE NOTE 3) A C-3
	EXISTING SPARE ELECTRICAL CONDUIT AND WATER PIPING (SEE NOTE 3)
AW0170LB	LOWER B-SAND BIOAMENDMENT INJECTION WELL LOCATION
AW0001UB	UPPER B-SAND BIOAMENDMENT INJECTION WELL LOCATION
AW0011B	UPPER/LOWER B-SAND BIOAMENDMENT INJECTION WELL LOCATION
AW0311C	C-SAND BIOAMENDMENT INJECTION WELL LOCATION
WCC-03S	EXISTING GROUNDWATER MONITORING WELL
1-VEW-9	SINGLE COMPLETION SOIL VAPOR EXTRACTION WELL LOCATION
1-VEW-16	DOUBLE COMPLETION SOIL VAPOR EXTRACTION WELL LOCATION
VMW-04	VAPOR MITIGATION WELL LOCATION
AND	BIOAMENDMENT PIPE TRENCH (EXISTING)
	SOIL VAPOR EXTRACTION / VAPOR MITIGATION PIPE TRENCH
	COMBINED REMEDIATION PIPING TRENCH
F	FIRE SYSTEM PIPE
S	SEWER LINE
SD	STORM DRAIN PIPE
W	WATER LINE

NOTE:

1. ALL DIMENSIONS AND LOCATIONS OF WELLS, BUILDINGS, AND OTHER IMPROVEMENTS SHOWN HERE ARE APPROXIMATE ONLY AND WILL BE FIELD VERIFIED AS NEEDED PRIOR TO PROCUREMENT AND CONSTRUCTION. ALL UTILITIES WILL BE FIELD LOCATED PRIOR TO ANY INTRUSIVE ACTIVITIES SUCH AS DRILLING OR TRENCHING.
2. SITE PLAN BASED ON LOT 8 AS-BUILTS BY HALEY AND ALDRICH (MAY 23, 2006), DATA FROM SUNRIDER MANUFACTURING, AND OTHER INFORMATION PROVIDED BY BOEING.
3. CONNECTION TO EXTRACTION WELL EWB001 WILL UTILIZE EXISTING SPARE DOUBLE-CONTAINED PIPING AS MUCH AS POSSIBLE AND NEW DOUBLE-CONTAINED PIPING AS SHOWN. INJECTION PIPING WILL UTILIZE EXISTING SINGLE-CONTAINED PIPING.
4. EXCEPT FOR EXISTING WELL WCC_06S AND NEW WELL EWB002, ALL GROUP A, B, AND D WELLS ARE CURRENTLY AMENDMENT WELLS THAT WILL BE MODIFIED AND GIVEN SURFACE COMPLETIONS DIRECTLY ABOVE THE WELL. EXISTING CONNECTIONS TO VAULTS WILL BE CAPPED. SEE DETAIL B ON DRAWING C-3.
5. GROUP C DOWNGRADIENT WELLS ARE EXISTING GROUNDWATER MONITORING WELLS, TMW_07 AND WCC_125 (NOT SHOWN HERE).
6. SEE DRAWINGS C-2 AND I-1 FOR AMENDMENT EQUIPMENT AND PIPING CONNECTIONS.
7. GRAYED BACK EQUIPMENT IS NOT EXPECTED TO BE USED.
8. AMENDMENT EQUIPMENT IS HOUSED IN EXISTING SHIPPING CONTAINER OWNED BY BOEING AND LOCATED AT THE C-1 FACILITY. EQUIPMENT WILL BE BROUGHT TO SITE FOR THIS PILOT TEST.

N

1" = 30'

100% DESIGN SUBMITTAL

REV. NO.	DATE	DRWN	CHKD	REMARKS
2	4/2/07	PJR	JTB	UPDATED PER BRC COMMENTS
1	3/7/07	PJR	JTB	90% DESIGN SUBMITTAL
0	2/21/07	PJR	JTB	30% DESIGN SUBMITTAL

DESIGNED BY: JTB
DRAWN BY: PJR
SHEET CHK'D BY: JTB
CROSS CHK'D BY: PJE/JRR
APPROVED BY: RS
DATE: APRIL 2007

CDM
consulting engineering construction operations
18581 Teller Avenue, Suite 200
Irvine, CA 92612
Tel: (949) 752-5452 Fax: (949) 752-1307

BOEING REALTY CORPORATION
FORMER C-6 FACILITY LOS ANGELES, CALIFORNIA
FORMER BUILDING 1/36 AREA

PILOT BIORECIRCULATION TEST SITE PLAN

PROJECT NO. 5000-55353
FILE NAME: C-1-Knox-N
SHEET NO. C-1

BOE-C6-0054011

P:\27355\Sunrider-infor\ C-1-Knox-N 04/02/07 07:43 riehlepj XREFS: 22x34bdr; CDM-WELLS; CDM-L8-NEW

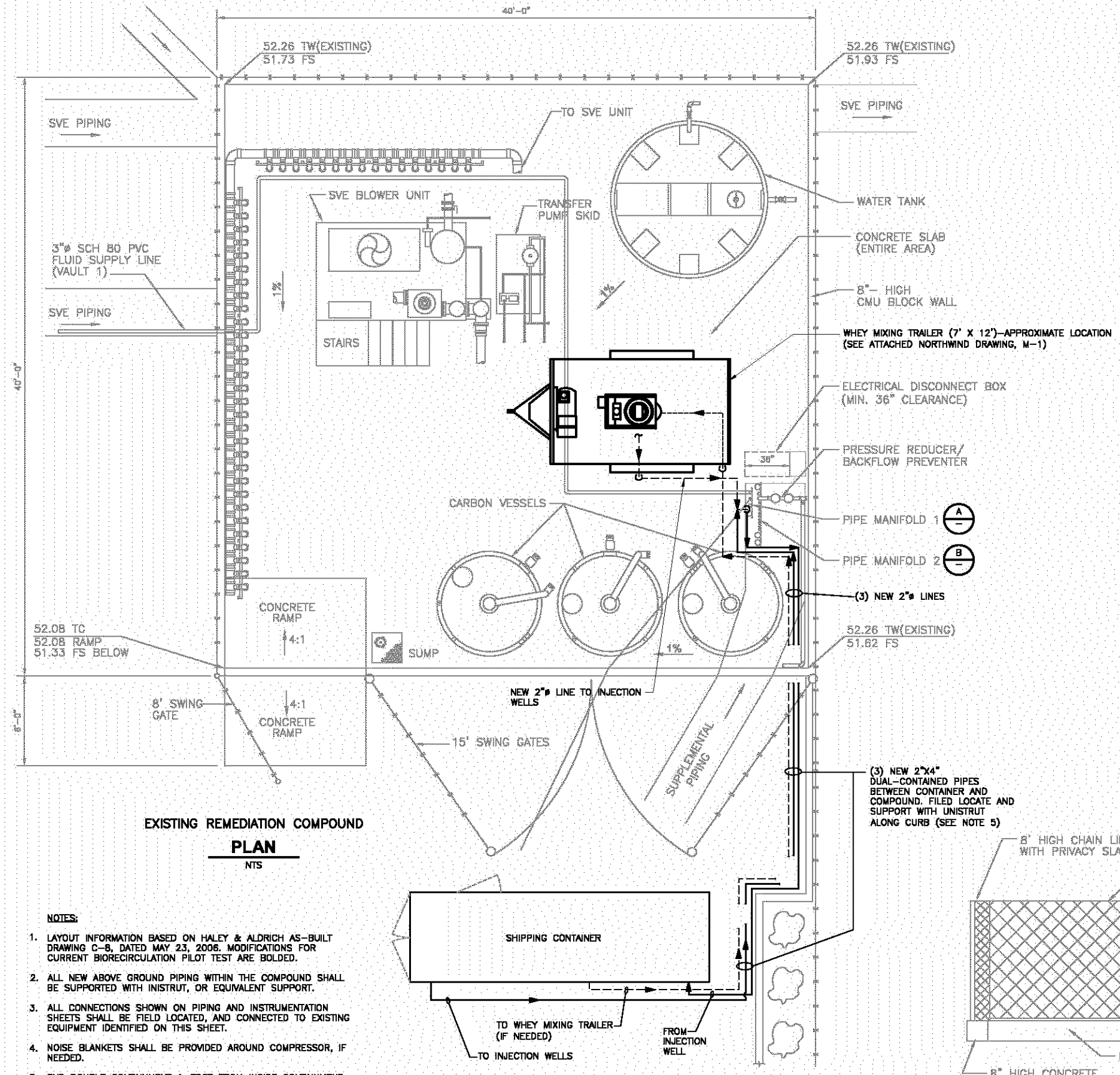

EXISTING REMEDIATION COMPOUND

PLAN

NTS

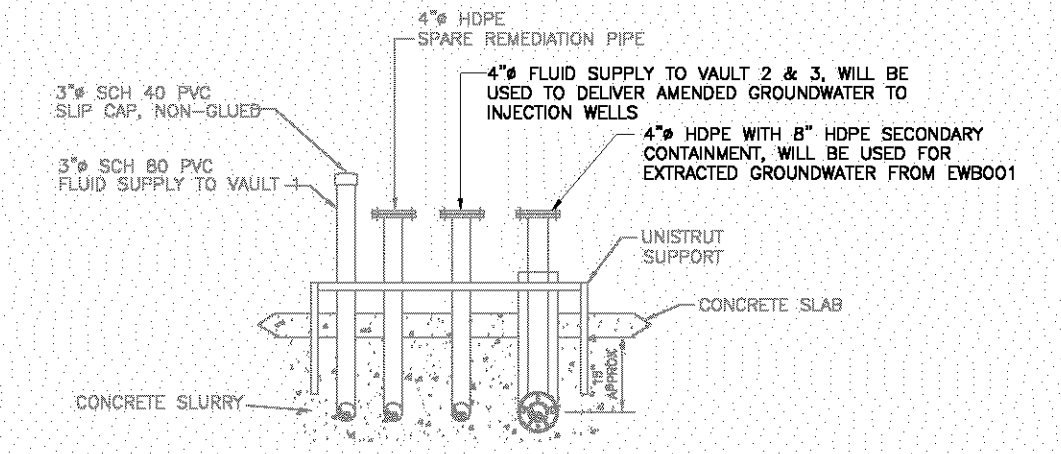

EXISTING REMEDIATION PIPE MANIFOLD 1

DETAIL A

NTS

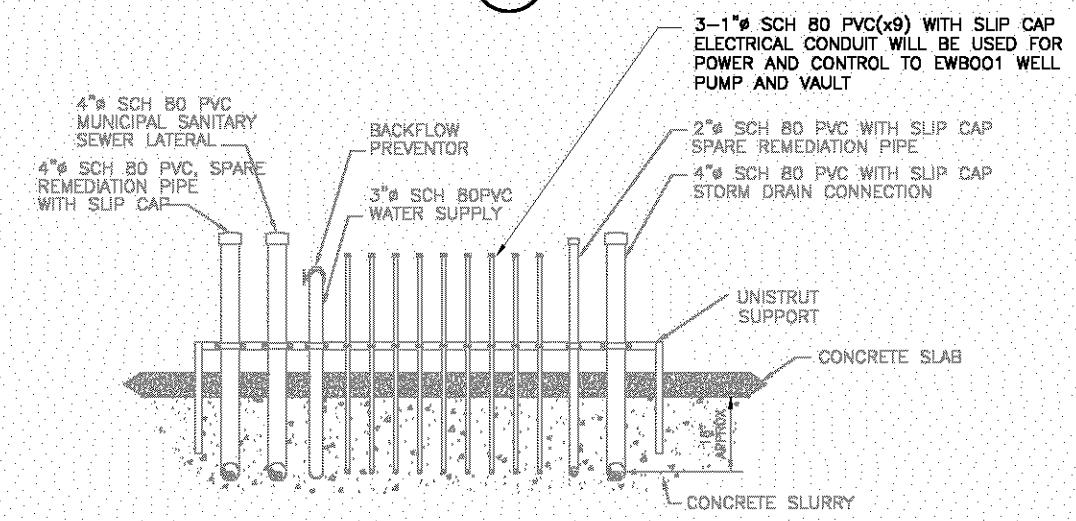

EXISTING REMEDIATION PIPE MANIFOLD 2

DETAIL B

NTS

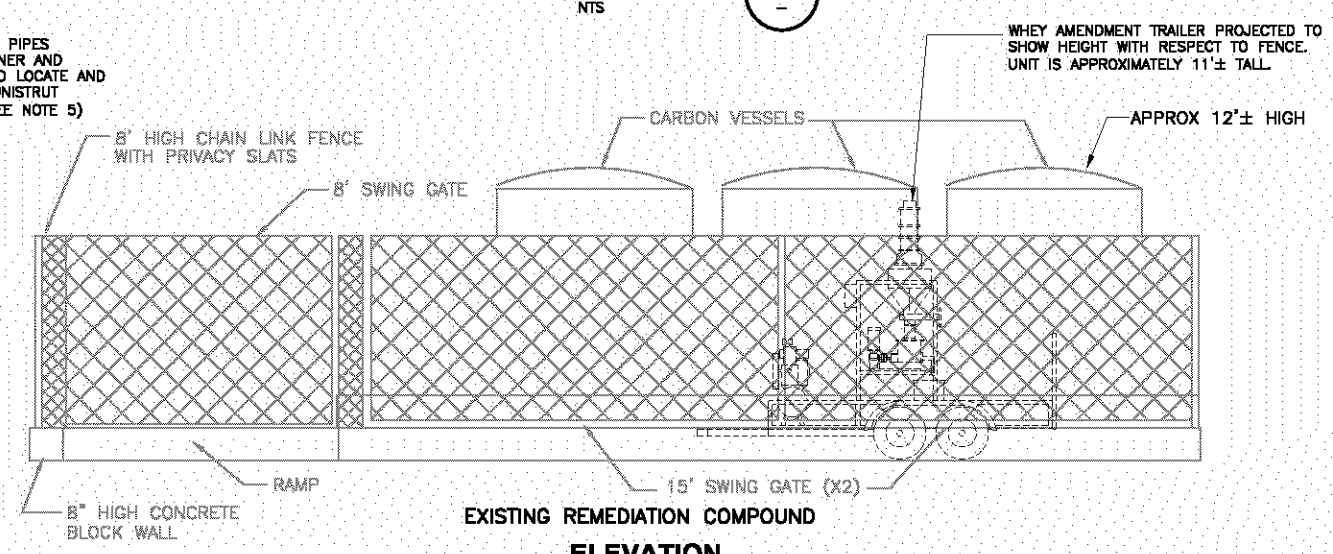

EXISTING REMEDIATION COMPOUND

ELEVATION

NTS

NOTES:

1. LAYOUT INFORMATION BASED ON HALEY & ALDRICH AS-BUILT DRAWING C-8, DATED MAY 23, 2006. MODIFICATIONS FOR CURRENT BIORECIRCULATION PILOT TEST ARE BOLDED.
2. ALL NEW ABOVE GROUND PIPING WITHIN THE COMPOUND SHALL BE SUPPORTED WITH INISTRUT, OR EQUIVALENT SUPPORT.
3. ALL CONNECTIONS SHOWN ON PIPING AND INSTRUMENTATION SHEETS SHALL BE FIELD LOCATED, AND CONNECTED TO EXISTING EQUIPMENT IDENTIFIED ON THIS SHEET.
4. NOISE BLANKETS SHALL BE PROVIDED AROUND COMPRESSOR, IF NEEDED.
5. END DOUBLE CONTAINMENT 1-FOOT FROM INSIDE CONTAINMENT WALL.

100% DESIGN SUBMITTAL

REV. NO.	DATE	DRWN	CHKD	REMARKS
2	4/2/07	PJR	JTB	UPDATED PER BRC COMMENTS
1	3/7/07	PJR	JTB	90% DESIGN SUBMITTAL
0	2/21/07	PJR	JTB	30% DESIGN SUBMITTAL

DESIGNED BY: JTB
DRAWN BY: PJR
SHEET CHK'D BY: JTB
CROSS CHK'D BY: PJE/JRR
APPROVED BY: RS
DATE: APRIL 2007

CDM
consulting engineering construction operations
18581 Teller Avenue, Suite 200
Irvine, CA 92612
Tel: (949) 752-5452 Fax: (949) 752-1307

BOEING REALTY CORPORATION
FORMER C-6 FACILITY LOS ANGELES, CALIFORNIA

FORMER BUILDING 1/36 AREA

PILOT BIORECIRCULATION TEST COMPOUND LAYOUT AND DETAILS

PROJECT NO. 5000-55353
FILE NAME: C-2

SHEET NO.
C-2

BOE-C6-0054012

P:\27355\Sunrider-infor\C-2 04/02/07 07:48 riehlepj XREFS: 22x34bdr

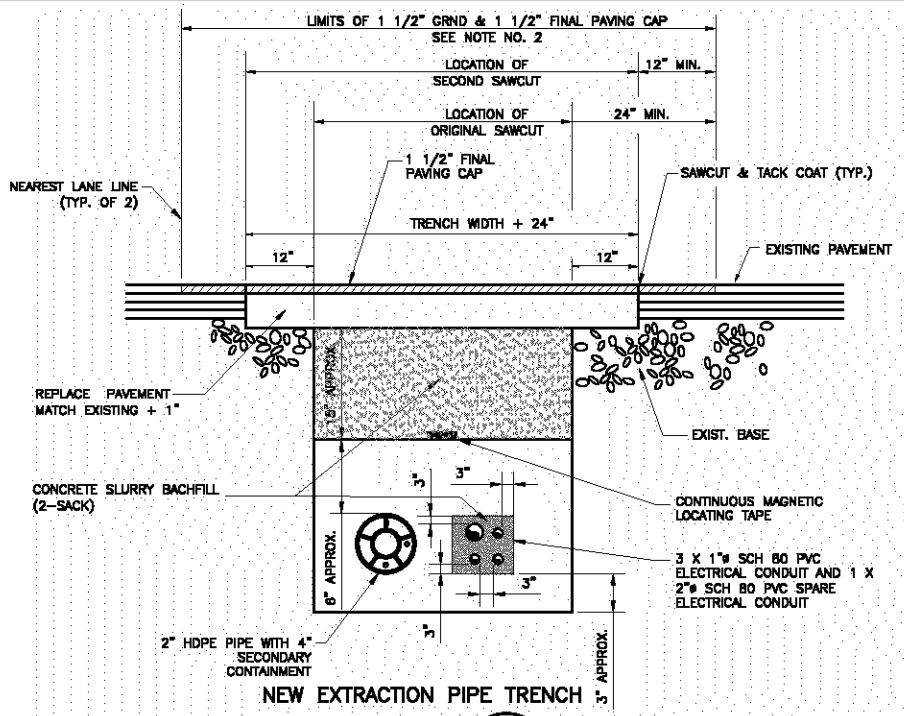

NEW EXTRACTION PIPE TRENCH

DETAIL A / C-1

NTS

NOTES:

1. WHERE THE EDGE OF THE PAVEMENT REMOVED FOR THE TRENCH EXCAVATION COMES WITHIN THREE (3) FEET OF THE OUTER EDGE OF THE PAVEMENT AGAINST GUTTER LINE OF CURB FACE, THE EXISTING PAVING SHALL BE REMOVED TO THE GUTTER LINE OR CURB FACE AND THE PERMANENT PAVEMENT LAID TO THE CUTTER LINE OR CURB FACE.

   WHERE THE EDGE LINE OF THE PAVEMENT REMOVED FOR THE PIPELINE TRENCH EXCAVATION IS MORE THAN THREE (3) FEET FROM THE GUTTER LINE OR CURB FACE, THE CONTRACTOR IS TO SAWCUT THE EXISTING PAVING TWELVE (12) INCHES BACK FROM THE EDGE OF THE TRENCH AND REMOVE THAT EXISTING PAVEMENT BEFORE PLACEMENT OF PERMANENT PAVING (INCLUDING BASE MATERIAL).

   AC PAVEMENT TRENCH REPLACEMENT SHALL BE PLACED NO LESS THAN FLUSH WITH ADJACENT EXISTING PAVEMENT. PRIOR TO PLACEMENT OF 1-1/2" FINAL AC CAP, THE PREVIOUSLY PLACED AC PAVEMENT TRENCH REPLACEMENT SHALL BE GROUND ALONG WITH ADJACENT AC PAVEMENT AS SHOWN ON DETAIL.

2. THE EXISTING PAVEMENT AND AC PAVEMENT TRENCH REPLACEMENT IS TO BE MECHANICALLY GROUND DOWN A MINIMUM OF 1" (A MINIMUM OF AN ADDITIONAL 12" OUTSIDE OF THE AC PAVEMENT TRENCH REPLACEMENT OR TRENCH WIDTH + 48") TO THE NEAREST LANE LINES ON BOTH SIDES OF THE TRENCH. THE PERMANENT PAVING SHALL THAN BE EXTENDED AS AN OVERLAY INTO THIS AREA. ALL EXISTING PAVEMENT EDGES ARE TO BE TACK COATED BEFORE APPLICATION OF PERMANENT PAVEMENT. IF THERE IS LESS THAN (2) INCHES OF PAVEMENT AFTER GRINDING, THEN GROUND AREA SHALL BE REMOVED BY SAW CUTTING AND PERMANENT PAVEMENT PLACED.

3. CONTRACTOR TO CLEAN AREA WITH BROOM OR SWEEPER PRIOR TO END OF EACH WORK DAY.

4. ALL EXISTING STRIPPING AND PAVEMENT MARKERS REMOVED BY TRENCHING/REPAVING SHALL BE REPLACED TO MATCH EXISTING.

5. FINAL AC PAVEMENT SECTIONS SHALL BE NO LESS THAN 4" TOTAL THICKNESS FOR NEW SECTIONS AS WELL AS RESTORED SECTIONS.

6. CONCRETE PAVEMENT SHALL BE REPLACED PER STANDARD PLANS FOR PUBLIC WORKS CONSTRUCTION (SPPWC) NOS. 132-2 AND 134-1 (CONCRETE PAVEMENT JOINT DETAILS), EXCEPT AS MODIFIED BY THIS DETAIL. NEW CONCRETE SHALL BE PCC (520-A-2500).

7. ASPHALT SHALL BE REPLACED PER STANDARD SPECIFICATIONS FOR PUBLIC WORKS CONSTRUCTION NO. 302-5 AND SPPWC NO. 133-2, EXCEPT AS MODIFIED BY THIS DETAIL. NEW ASPHALT SHALL BE AR-4000.

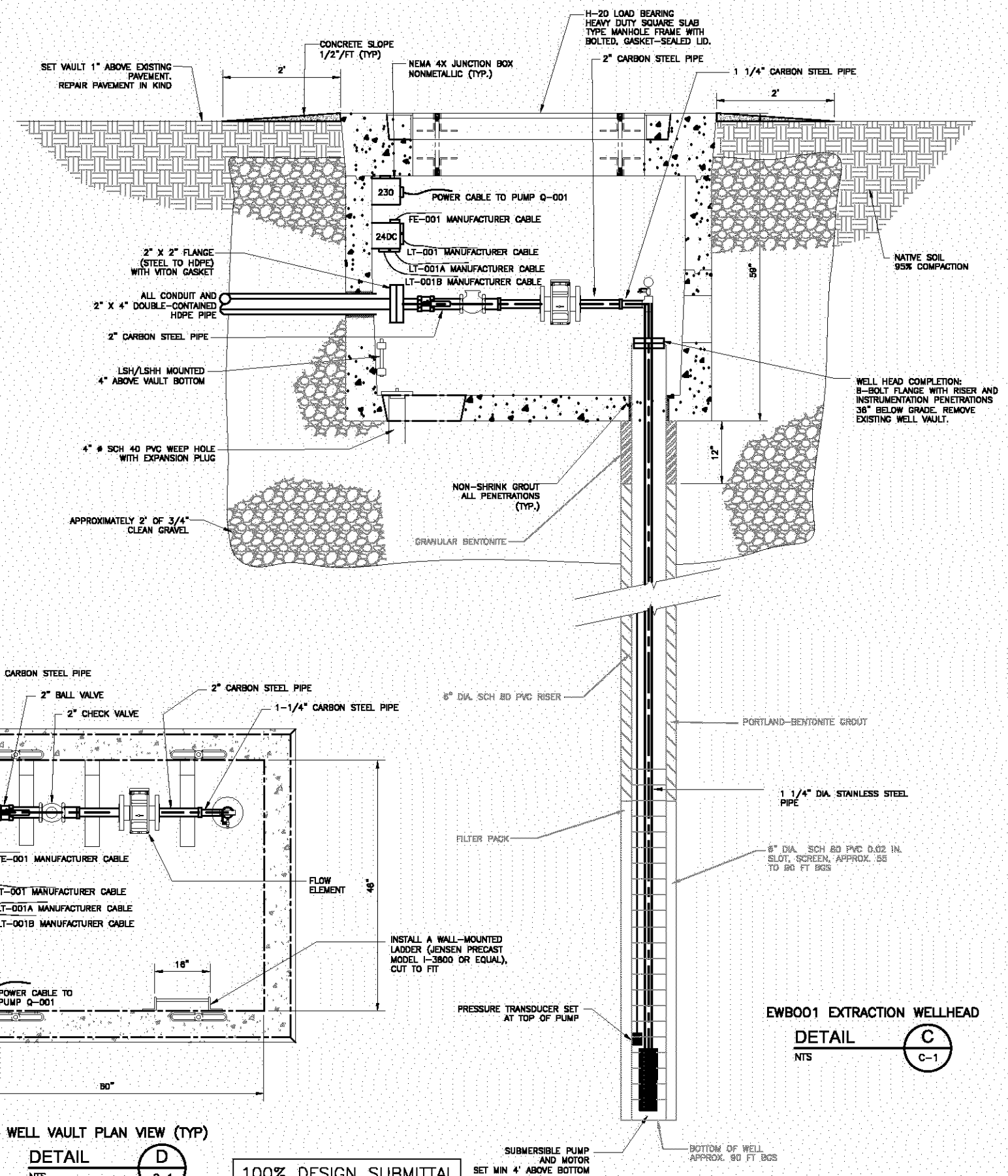

EWB001 EXTRACTION WELLHEAD

DETAIL C / C-1

NTS

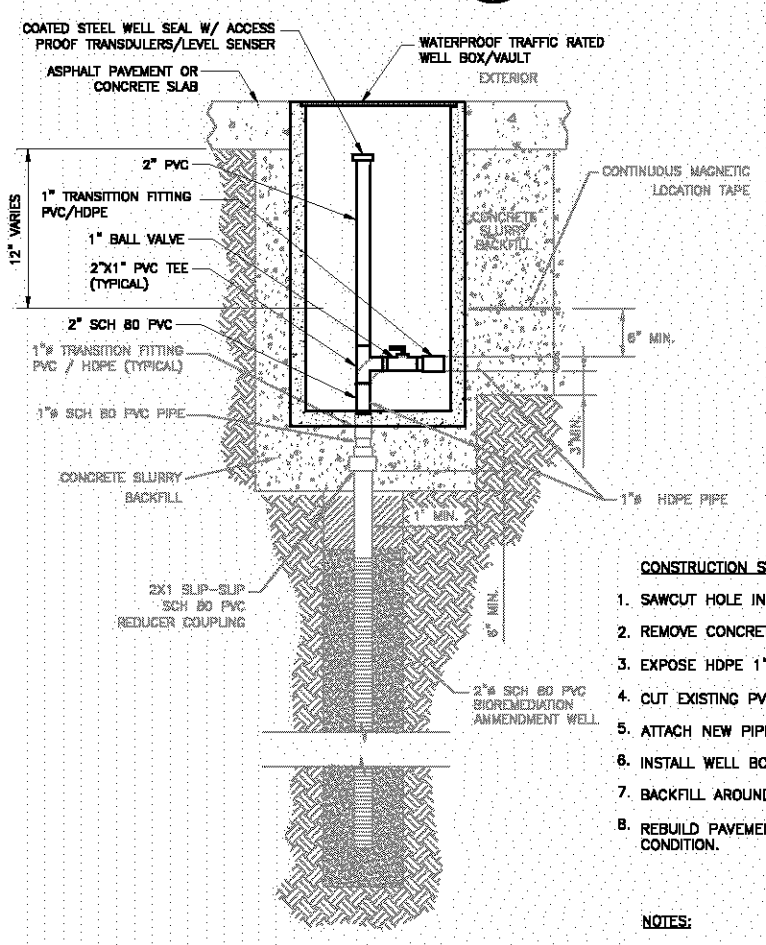

CONSTRUCTION STEPS:

1. SAWCUT HOLE IN EXISTING PAVEMENT OR SLAB.
2. REMOVE CONCRETE SLURRY BACKFILL.
3. EXPOSE HDPE 1" PVC/HDPE TRANSITION FITTING.
4. CUT EXISTING PVC PIPE BELOW PVC/HDPE TRANSITION FITTING.
5. ATTACH NEW PIPING, STUB TO SUFACE AS SHOWN.
6. INSTALL WELL BOX. GROUT AROUND PIPE IN BOTTOM.
7. BACKFILL AROUND NEW PIPING WITH CONCRETE SLURRY.
8. REBUILD PAVEMENT/CONCRETE SLAB TO MATCH ORIGINAL CONDITION.

NOTES:

1. EXISITING AMENDMENT WELLS WILL BE CONVERTED TO MONITORING WELLS AS SHOWN ON C-1.
2. WELL BOX WILL BE SIZED TO FIT COMPOMENTS AS SHOWN. BOX SIZE WILL BE DEPENDENT ON DEPTH OF 1" HDPE LINE. BOX SHALL BE SIZED SUCH THAT NEW TEE AND VALVE ARE ACCESSIBLE.

AMENDMENT WELL CONVERSION DETAIL

DETAIL B / C-1

NTS

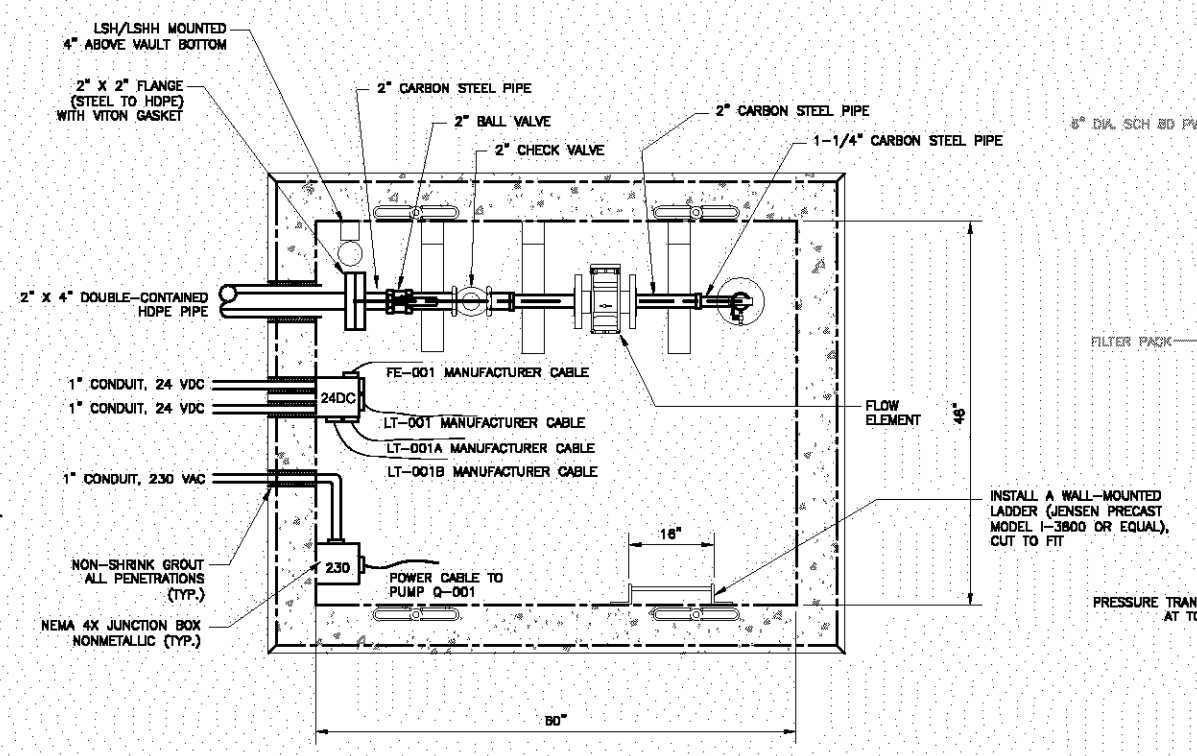

WELL VAULT PLAN VIEW (TYP)

DETAIL D / C-1

NTS

100% DESIGN SUBMITTAL

REV. NO.	DATE	DRWN	CHKD	REMARKS
2	4/2/07	PJR	JTB	UPDATED PER BRC COMMENTS
1	3/7/07	PJR	JTB	90% DESIGN SUBMITTAL
0	2/21/07	PJR	JTB	30% DESIGN SUBMITTAL

DESIGNED BY: JTB
DRAWN BY: PJR
SHEET CHK'D BY: JTB
CROSS CHK'D BY: PJE/JRR
APPROVED BY: RS
DATE: APRIL 2007

CDM
consulting engineering construction operations
18581 Teller Avenue, Suite 200
Irvine, CA 92612
Tel: (949) 752-5452 Fax: (949) 752-1307

BOEING REALTY CORPORATION
FORMER C-6 FACILITY LOS ANGELES, CALIFORNIA

FORMER BUILDING 1/36 AREA

PILOT BIORECIRCULATION TEST CIVIL DETAILS

PROJECT NO. 5000-55353
FILE NAME: C-3

SHEET NO.

C-3

BOE-C6-0054013

P:\27355\Sunrider-infor\ C-3 04/02/07 09:29 riehlepj XREFS: 22x34bdr

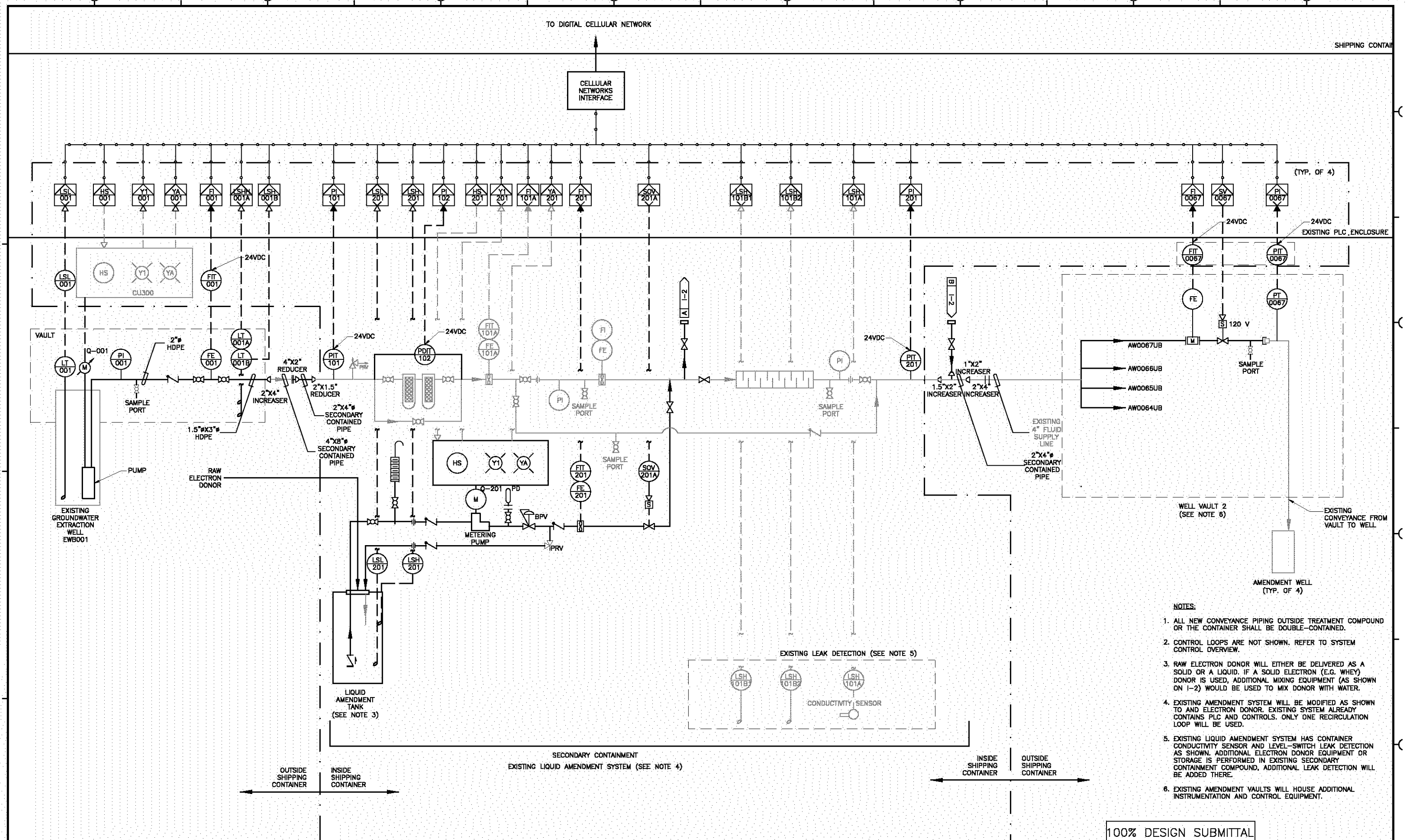

NOTES:

1. ALL NEW CONVEYANCE PIPING OUTSIDE TREATMENT COMPOUND OR THE CONTAINER SHALL BE DOUBLE-CONTAINED.
2. CONTROL LOOPS ARE NOT SHOWN. REFER TO SYSTEM CONTROL OVERVIEW.
3. RAW ELECTRON DONOR WILL EITHER BE DELIVERED AS A SOLID OR A LIQUID. IF A SOLID ELECTRON (E.G. WHEY) DONOR IS USED, ADDITIONAL MIXING EQUIPMENT (AS SHOWN ON I-2) WOULD BE USED TO MIX DONOR WITH WATER.
4. EXISTING AMENDMENT SYSTEM WILL BE MODIFIED AS SHOWN TO AND ELECTRON DONOR. EXISTING SYSTEM ALREADY CONTAINS PLC AND CONTROLS. ONLY ONE RECIRCULATION LOOP WILL BE USED.
5. EXISTING LIQUID AMENDMENT SYSTEM HAS CONTAINER CONDUCTIVITY SENSOR AND LEVEL-SWITCH LEAK DETECTION AS SHOWN. ADDITIONAL ELECTRON DONOR EQUIPMENT OR STORAGE IS PERFORMED IN EXISTING SECONDARY CONTAINMENT COMPOUND. ADDITIONAL LEAK DETECTION WILL BE ADDED THERE.
6. EXISTING AMENDMENT VAULTS WILL HOUSE ADDITIONAL INSTRUMENTATION AND CONTROL EQUIPMENT.

100% DESIGN SUBMITTAL

REV. NO.	DATE	DRWN	CHKD	REMARKS
2	4/2/07	MS	YT	UPDATED PER BRC COMMENTS
1	3/7/07	MS	YT	90% DESIGN SUBMITTAL
0	2/21/07	MS	YT	30% DESIGN SUBMITTAL

DESIGNED BY: YT
DRAWN BY: MS
SHEET CHK'D BY: TY
CROSS CHK'D BY: RS
APPROVED BY: MTD
DATE: APRIL 2007

CDM
consulting engineering construction operations
18581 Teller Avenue, Suite 200
Irvine, CA 92612
Tel: (949) 752-5452 Fax: (949) 752-1307

BOEING REALTY CORPORATION
FORMER C-6 FACILITY LOS ANGELES, CALIFORNIA

FORMER BUILDING 1/36 AREA

PILOT BIORECIRCULATION TEST PROCESS AND INSTRUMENTATION DIAGRAM (1 OF 2)

PROJECT NO. 27355-47930
FILE NAME: I-1

SHEET NO.
I-1

BOE-C6-0054014

F:\27355\Sunrider-infor\ I-1 01/30/07 14:00 riehlebj XREFS: 22x34bdr

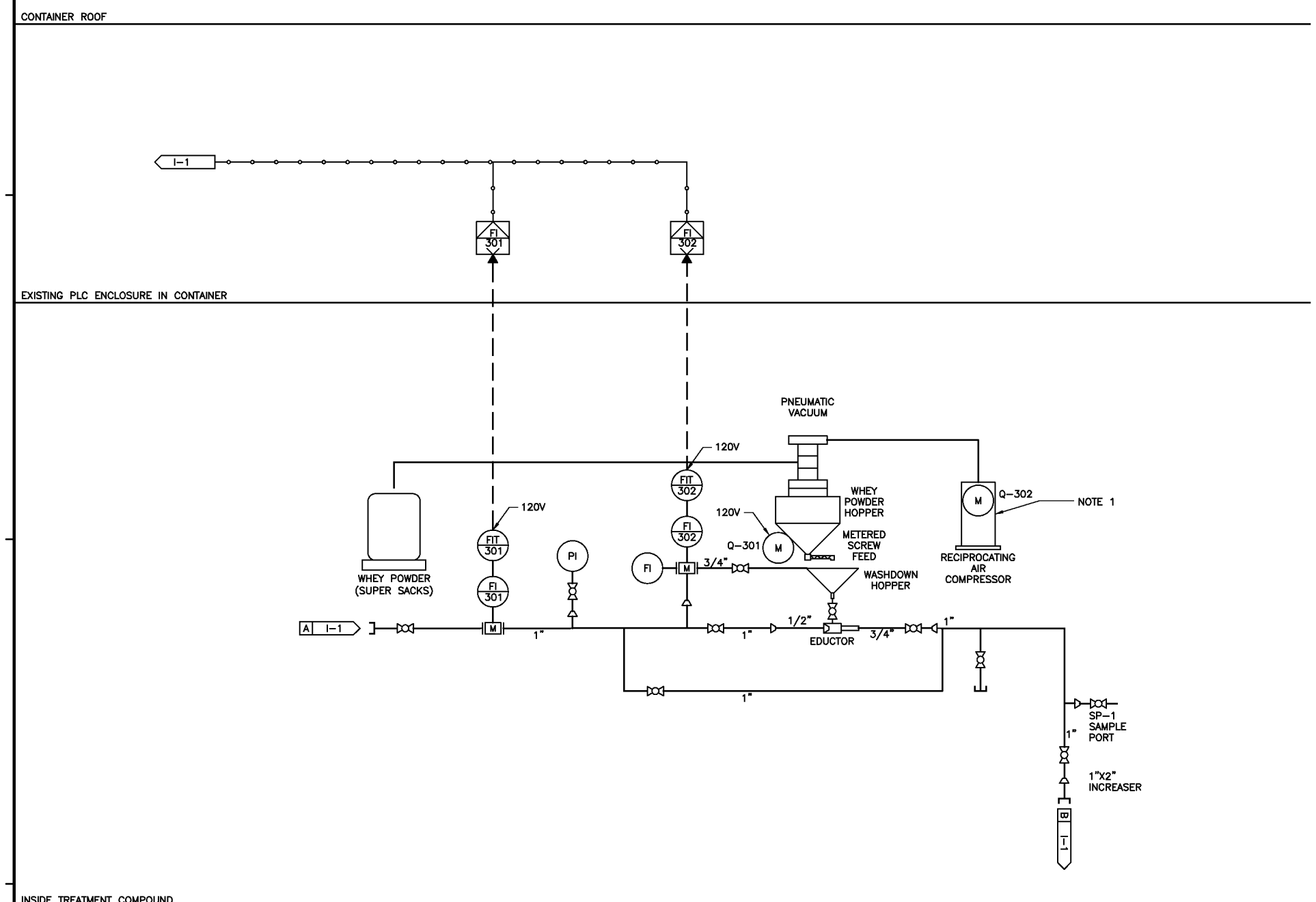

WHEY MIXING TRAILER

LEGEND:

- UNION
- CONCENTRIC REDUCER/INCREASER
- SOLENOID VALVE
- CHECK VALVE
- BALL VALVE
- PRESSURE RELIEF VALVE
- VACUUM BREAKER VALVE
- STATIC MIXER
- DISCRETE INSTRUMENT (FIELD MOUNTED)
- INSTRUMENTS SHARING COMMON HOUSING
- LEVEL SWITCH
- METERING PUMP (DIAPHRAGM OR PERISTATIC)
- MOTOR – MAY BE ELECTRICAL, HYDRAULIC, OR PNEUMATIC; ARROW DENOTES VARIABLE SPEED
- PULSATION DAMPERS (PD)
- BACK PRERSSURE VALVE (BVP)
- QUICK CONNECT
- TURBINE, PROPELLER, OR PADDLE WHEEL FLOW METER
- FILTER
- CALIBRATION COLUMN
- INDICATING PILOT LIGHT
- MAGNETIC FLOW METERING TUBE

NOTES:

1. A PORTABLE GAS-DRIVEN COMPRESSOR WILL BE AVAILABLE AS A BACKUP.

100% DESIGN SUBMITTAL

REV. NO.	DATE	DRWN	CHKD	REMARKS
2	4/2/07	MS	YT	UPDATED PER BRC COMMENTS
1	3/7/07	MS	YT	90% DESIGN SUBMITTAL
0	2/21/07	MS	YT	30% DESIGN SUBMITTAL

DESIGNED BY: YT
DRAWN BY: MS
SHEET CHK'D BY: TY
CROSS CHK'D BY: RS
APPROVED BY: MTD
DATE: APRIL 2007

CDM
consulting engineering construction operations
18581 Teller Avenue, Suite 200
Irvine, CA 92612
Tel: (949) 752-5452 Fax: (949) 752-1307

BOEING REALTY CORPORATION
FORMER C-6 FACILITY LOS ANGELES, CALIFORNIA
FORMER BUILDING 1/36 AREA

PILOT BIORECIRCULATION TEST PROCESS AND INSTRUMENTATION DIAGRAM (2 OF 2)

PROJECT NO. 27355-47930
FILE NAME: I-1
SHEET NO. I-2

BOE-C6-0054015

P:\27355\Sunrider-infor\ I-1 01/30/07 14:00 riehlepj XREFS: 22x34bdr

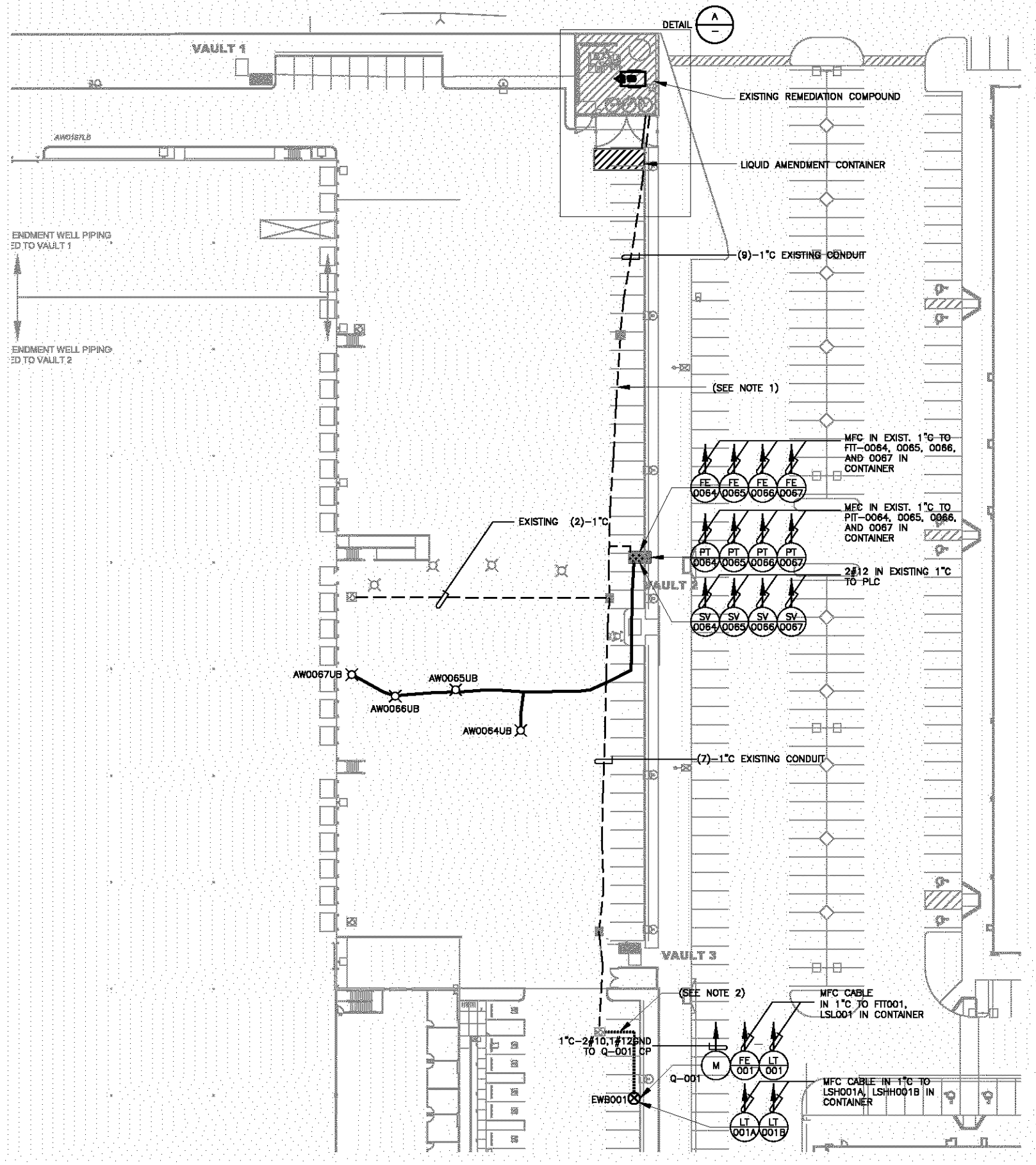

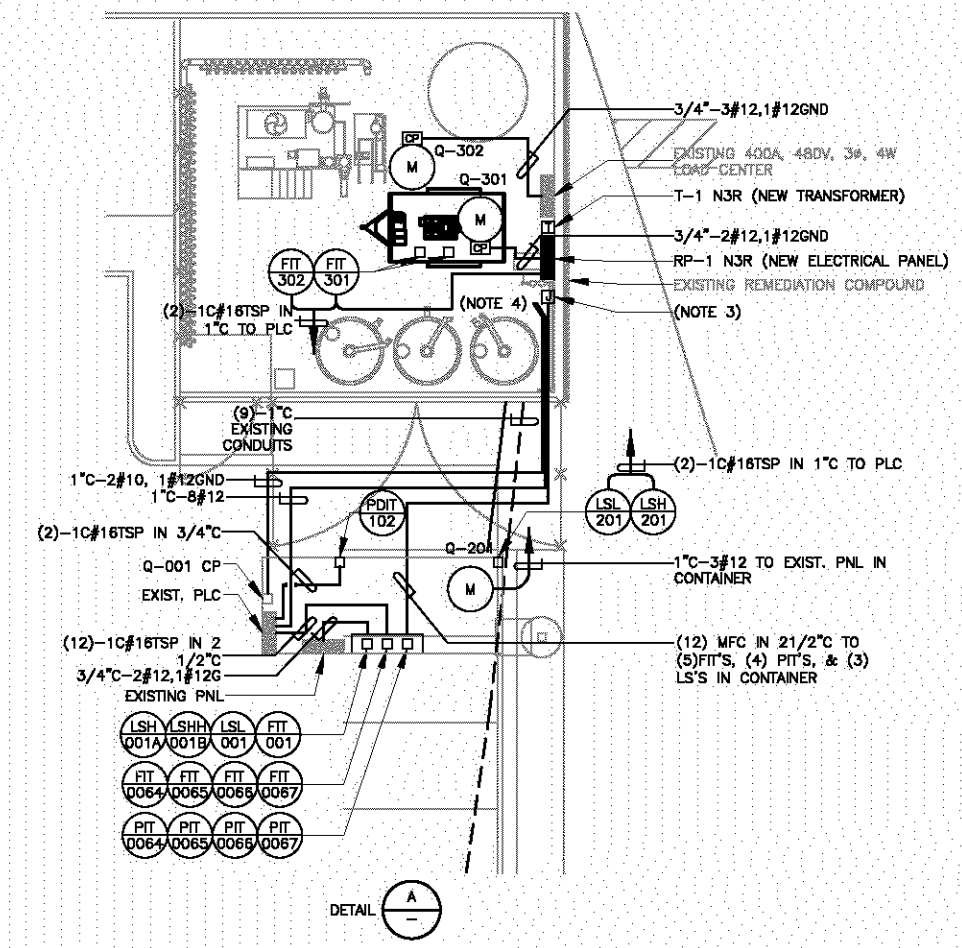

APPROX. SCALE: 1"-10'

NOTE:

1. RUN POWER AND CONTROL WIRES THROUGH EXISTING SPARE CONDUIT TO FIELD INSTRUMENTATION DEVICES AND WELL PUMP. USE SEPARATE CONDUITS FOR POWER AND CONTROL WIRES.
2. INTERCEPT (1) NEW SPARE 2" CONDUIT AND (3) NEW 1" CONDUIT TO EXISTING ELECTRICAL CONDUIT AT STUB-OUT BOX FOR POWER AND CONTROL WIRES TO EXTRACTION WELL EWB001.
3. ADD NEW J-BOX TO INTERCEPT (6)-1"C EXISTING CONDUIT FOR FIELD DEVICE CONTROL CABLE BACK TO CONATANER.
4. EXTEND (2) EXISTING 1" CONDUIT BACK TO CONTAINER FOR Q-001 WELL PUMP POWER & (4) SV'S CONTROL.

N

1" = 30'
15 0 30

100% DESIGN SUBMITTAL

LEGEND:

- DISTRIBUTION POWER PANEL BOARD
- LIGHTING PANEL BOARD
- T — TRANSFORMER
- TRANSFORMER
- J — JUNCTION BOX (PULL BOX OR CONDUIT FITTING) IN GENERAL, UNLESS SPECIFICALLY NOTED, A PULL FITTING(CONDUIT BODY, IE "T", "X", ETC.) MAY BE USED WHERE CONDUIT CONFIGURATION AND NUMBER OF WIRES ALLOWS.
- M — MOTOR, NUMBER INSIDE CIRCLE = HP
- SV — SOLENOID VALVE
- MFC — INSTRUMENT MANUFACTURER CABLE
- MOLDED CASE OR INSULATED CASE CIRCUIT BREAKER (3 POLE UNLESS OTHERWISE NOTED). "AF" INDICATES CIRCUIT BREAKER FRAME SIZE "AT" INDICTTES CONTINUOUS AMP TRIP SETTING
- CP — CONTROL PANEL OR CONTROL UNIT
- GROUND
- UPS — UNINTERRUPTIBLE POWER SUPPLY
- XXX/XXX — INTSTRUMENTS FIELD MOUNTED
- COMBINATION MAGNETIC STARTER AND DISCONNECT/ SWITCH

REV. NO.	DATE	DRWN	CHKD	REMARKS
2	4/2/07	MS	YT	UPDATED PER BRC COMMENTS
1	3/7/07	MS	YT	90% DESIGN SUBMITTAL
0	2/21/07	MS	YT	30% DESIGN SUBMITTAL

DESIGNED BY: YT
DRAWN BY: MS
SHEET CHK'D BY: TY
CROSS CHK'D BY: RS
APPROVED BY: MTD
DATE: APRIL 2007

CDM
consulting engineering construction operations
18581 Teller Avenue, Suite 200
Irvine, CA 92612
Tel: (949) 752-5452 Fax: (949) 752-1307

BOEING REALTY CORPORATION
FORMER C-6 FACILITY LOS ANGELES, CALIFORNIA
FORMER BUILDING 1/36 AREA

PILOT BIORECIRCULATION TEST ELECTRICAL SITE PLAN

PROJECT NO. 27355-47930
FILE NAME: C-1-Knox-N

SHEET NO.
E-1

BOE-C6-0054016

P:\27355\Sunrider-inforx\C-1-Knox-N 02/21/07 14:30 riehleg XREFS: 22x34bdr, CDM-WELLS, CDM-LB-NEW

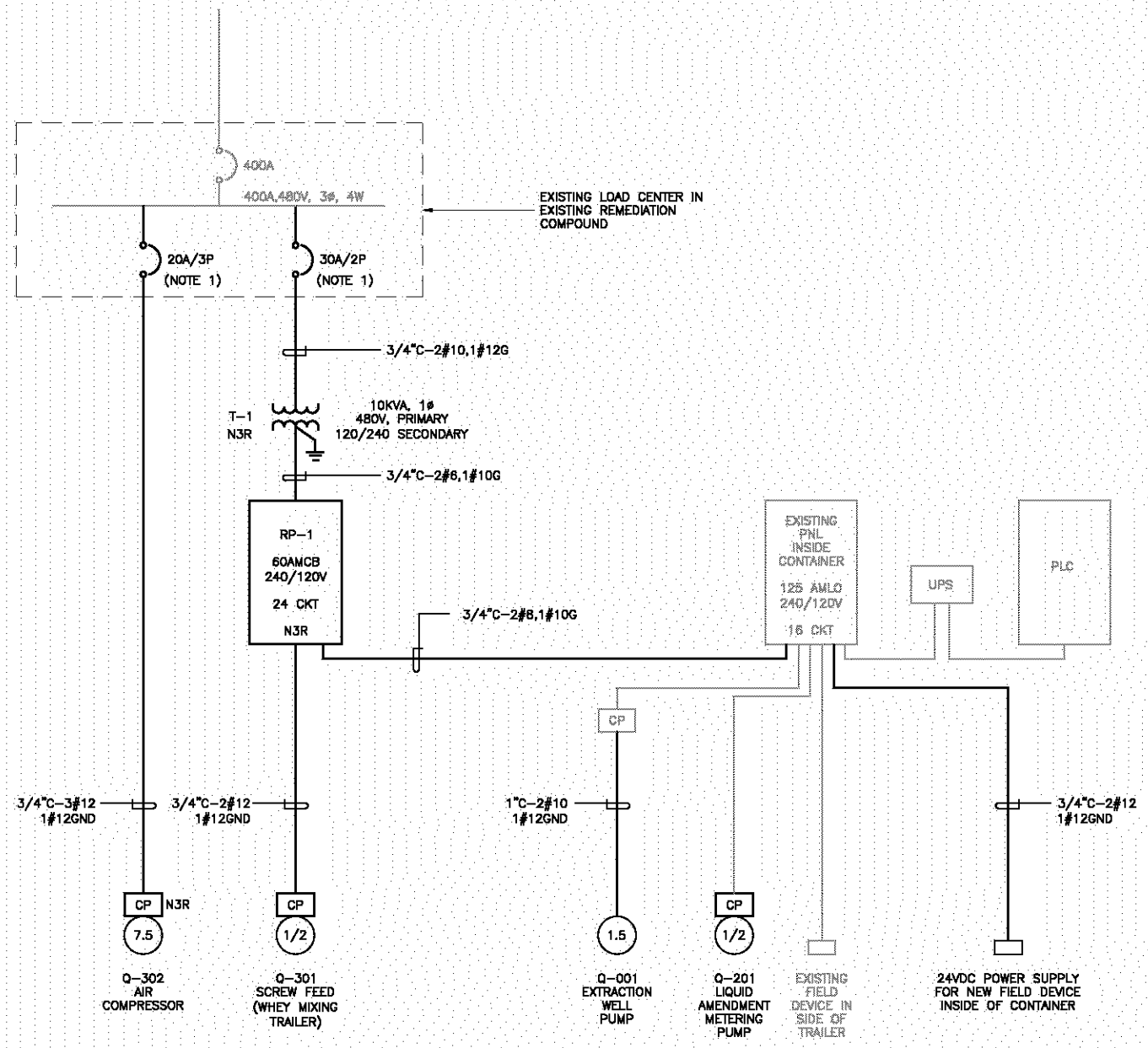

NOTES:

1. ADD NEW 30A/2P AND 20A/3P BREAKERS IN EXISTING 400A, 480V, 35KAIC GE 42CKT N3R PANEL.

ESTIMATED LOAD AT EXIST. 400A LOAD CENTER:

EXTRACTION WELL PUMP	1.5 HP	0.24 KV	1.65 KVA
LIQUID AMENDMENT PUMP	0.5 HP	0.12 KV	0.55 KVA
SCREW FEED	0.5 HP	0.12 KV	0.55 KVA
AIR COMPRESSOR	7.5 HP	0.48 KV	8.23 KVA
UPS / PLC			1.00 KVA
AC IN TRAILER			1.50 KVA
MISC			1.00 KVA
EXIST.SVE BLOWER SKID			61.84 KVA
TOTAL CONNECTED LOAD			76.31 KVA
PLUS 25% FOR FUTURE			95.39 KVA
TOTAL ESTIMATED LOAD			171.7 KVA

PANELBOARD RP-1

Location: Exist. Compound

100 **Amp Bus Rating** 60 **Amp Main Breaker** 10 **kA Short Circuit Rating** 24 **Poles**

120/240 **Volts** 1 **Phase** 3 **Wire** 60 Hz. ☐ Electronic Grade Surface **Mounted**

CKT NO	DESCRIPTION	Load VA Line 1	Load VA Line 2	Breaker Amps/ Poles	CKT NO	DESCRIPTION	Load VA Line 1	Load VA Line 2	Breaker Amps/ Poles	Notes
1	WHEY MIXING EQUIPMENT Q-301	1176		20/1	2	EXISTING PNL INSIDE OF TRAILER	3000		40/2	
3	FLOW TRANSMITTER FIT301 & FIT302		50	20/1	4			3000		
5	SPARE			20/1	6	SPARE			20/1	
7	SPARE			20/1	8	SPARE			20/1	
9	SPARE			20/1	10	SPARE			20/1	
11	SPARE			20/1	12	SPACE				
13	SPACE				14	SPACE				
15	SPACE				16	SPACE				
17	SPACE				18	SPACE				
19	SPACE				20	SPACE				
21	SPACE				22	SPACE				
23	SPACE				24	SPACE				
	Total VA	1176	50			**Total VA**	3000	3000		
						Total Line VA	4176	3050		
						Total Connected VA		7226		

Notes:
1 Provide Locking Hardware
2 Provide HACR Breaker for Motor Circuit
3. NEMA 3R Enclosure

100% DESIGN SUBMITTAL

REV. NO.	DATE	DRWN	CHKD	REMARKS
2	4/2/07	MS	YT	UPDATED PER BRC COMMENTS
1	3/7/07	MS	YT	90% DESIGN SUBMITTAL
0	2/21/07	MS	YT	30% DESIGN SUBMITTAL

DESIGNED BY: YT
DRAWN BY: MS
SHEET CHK'D BY: TY
CROSS CHK'D BY: RS
APPROVED BY: MTD
DATE: APRIL 2007

CDM
consulting engineering construction operations
18581 Teller Avenue, Suite 200
Irvine, CA 92612
Tel: (949) 752-5452 Fax: (949) 752-1307

BOEING REALTY CORPORATION
FORMER C-6 FACILITY LOS ANGELES, CALIFORNIA
FORMER BUILDING 1/36 AREA

PILOT BIORECIRCULATION TEST ONE LINE DIAGRAM

PROJECT NO. 27355-47930
FILE NAME: C-1-Knox-N

SHEET NO.
E-2

BOE-C6-0054017

F:\27355\Sunrider-infor\ 1-1 01/30/07 14:00 riehlepj XREFS: 22x34bdr

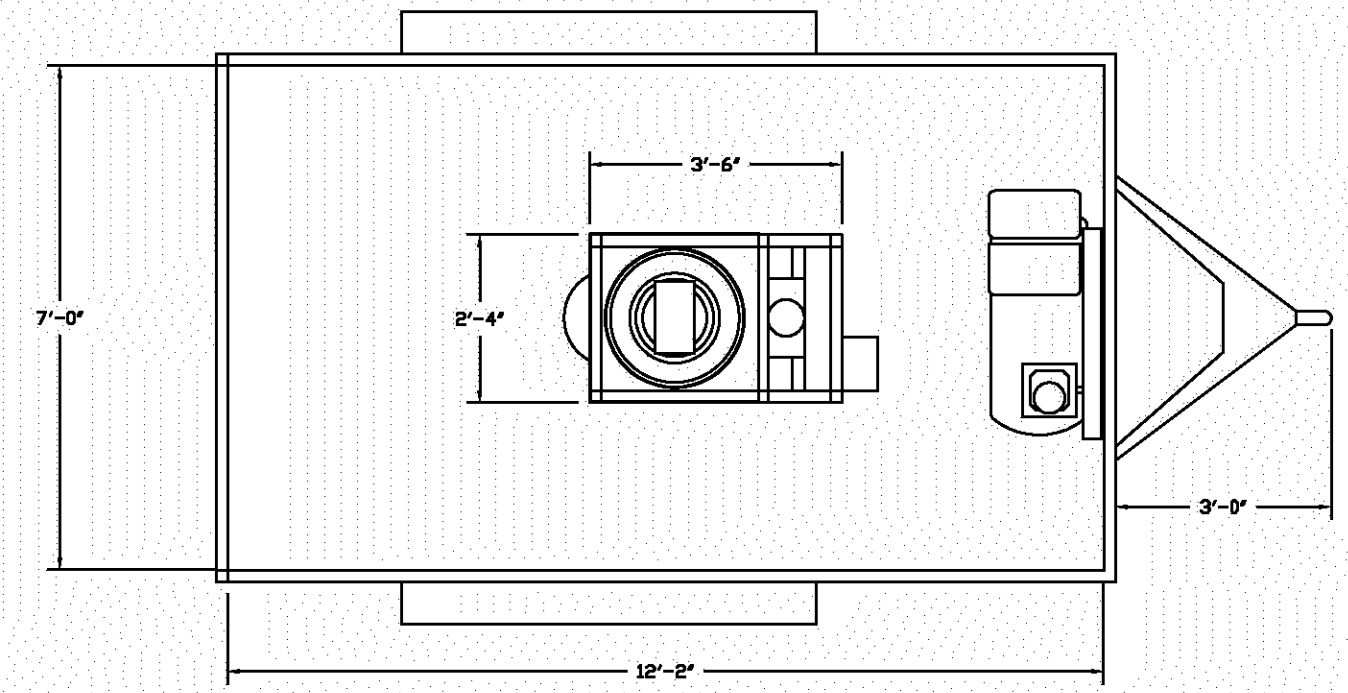

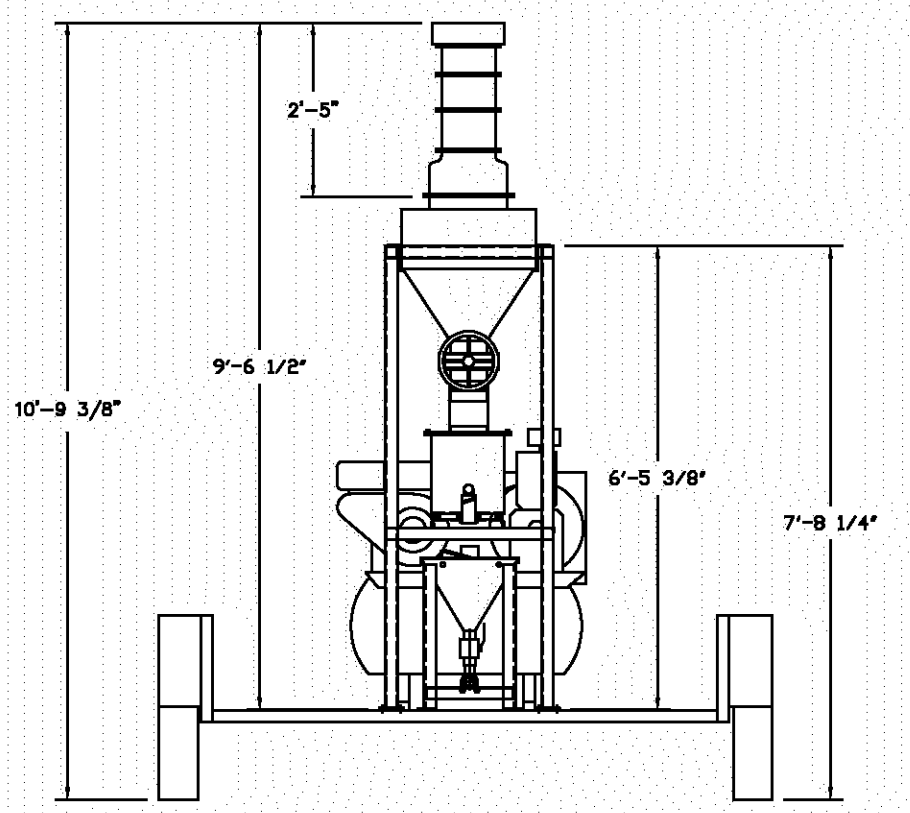

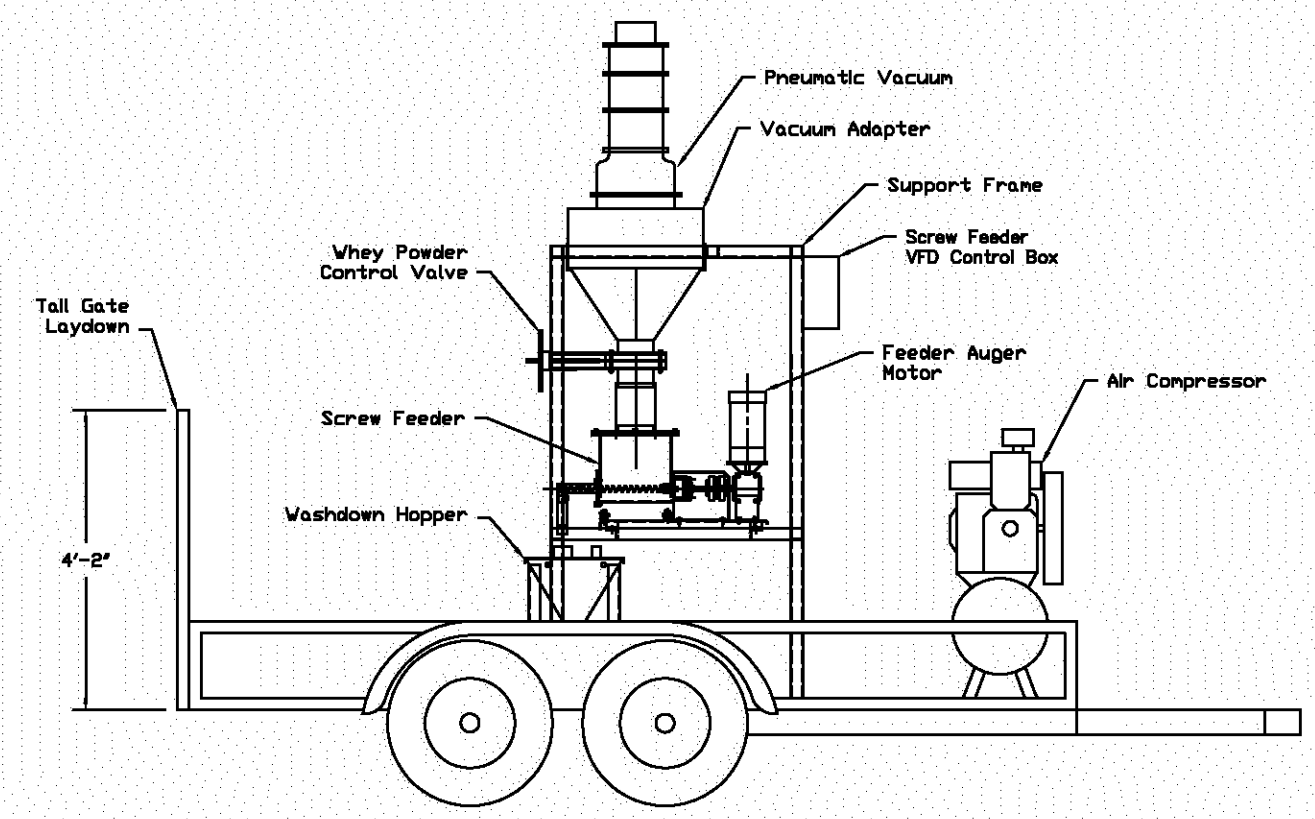

REV NUM	DESCRIPTION	CHK'D BY	APPV BY	DATE
1	INCORPORATE PNEUMATIC VACUUM SYSTEM		GDM	3/2/07

NORTH WIND DRAWING NO. NW05-032

DESIGNED BY:	GDM
DRAWN BY:	KEM
CHECKED BY:	KH
APPROVED BY:	GDM
CADD FILE:	

SCALE: ¾"=1" (D size)

DESIGN PHASE: Final

DATE: 9/21/2005

North Wind
North Wind, Inc.
1425 HIGHAM ST.
IDAHO FALLS, ID 83402
WEB: www.nwindenv.com
Phone: (208) 528-8718 Fax: (208) 528-8714

PORTABLE WHEY POWDER INJECTION SYSTEM

SYSTEM LAYOUT

JOB NUMBER 0719.001

SHEET NO. M-1

REV. 1