Haley & Aldrich, Inc.
9040 Friars Road
Suite 220
San Diego, CA 92108-5860

Tel: 619.280.9210
Fax: 619.280.9415
HaleyAldrich.com

HALEY & ALDRICH

8 November 2005
File No. 28882-506

Boeing Realty Corporation
4900 Conant Street, Building 1
Long Beach, CA 90808

Attention: Mr. Brian Mossman

Subject: Field Data Report for the Lot 8 Phase IV Amendment Well Installation Program, Former C-6 Facility, Los Angeles, California

Dear Mr. Mossman:

This letter summarizes and presents the field data collected during the installation of 83 amendment wells and six groundwater monitoring wells during the Lot 8 Phase IV amendment well installation program conducted in June and July 2005 at the former C-6 facility in Los Angeles, California. The well drilling and installation program was performed following the *Implementation Plan for Lot 8 Groundwater Injection Well Installation Program, Former Boeing C-6 Site, Los Angeles, California* prepared by Haley and Aldrich, Inc., 11 August 2004.

The following is a brief summary of our field activities:

A total of 83 amendment wells (AWs) (52 B-Sand and 32 C-Sand) and six groundwater monitoring wells (MWs) (two B-Sand and four C-sand) were drilled and installed between 1 June and 13 July 2005 as Phase IV of the AW installation program.

During development of C-Sand amendment well AW0013C, the well was found to be clogged with silt. The well was subsequently destroyed on 13 July and 18 July 2005 by overdrilling the well casing to a total depth of 94 feet bgs and grouting the boring with bentonite to the ground surface. A replacement well, AW0013C, was reinstalled approximately 10 feet north of the original location.

The 83 Phase IV AWs and the six Phase IV groundwater monitoring wells were developed between 10 June and 15 July 2005 using the surge, bail and pump method.

Following development, water injection tests (WIT) were performed on the 83 Phase IV AWs between 13 June and 15 July 2005, and all AWs passed these WIT.

Documents relating to the Phase IV AW Installation and testing program are included as attachments to this Field Data Report.

OFFICES

Boston
Massachusetts

Cleveland
Ohio

Dayton
Ohio

Detroit
Michigan

Hartford
Connecticut

Kansas City
Kansas

Los Angeles
California

Manchester
New Hampshire

Parsippany
New Jersey

Portland
Maine

Providence
Rhode Island

Rochester
New York

Santa Barbara
California

Tucson
Arizona

Washington
District of Columbia

Please contact the undersigned at (619) 285-7102 if you have any questions or comments.

Sincerely,

Haley & Aldrich, Inc.

Paul R. Sones, P.G., No. 6195
Senior Hydrogeologist

PROFESSIONAL GEOLOGIST
PAUL R. SONES
No. 6195
STATE OF CALIFORNIA

Attachments:

Attachment A – Well Installation Permits
Attachment B – Pre-field Activities Checklist, Standard Work Practices, and Incident Reporting Procedures, and Underground Service Alert Notification Forms
Attachment C – Daily Field Reports for Well Installation and Well Development
Attachment D –Well Construction and Destruction Records
Attachment E – Tailgate Safety Meeting Reports, Site Access Logs, and Records of Field Monitoring
Attachment F – Driller's Daily Reports
Attachment G – Well Development Records
Attachment H – Water Injection Testing (WIT) Forms
Attachment I – Health and Safety Incident Report and Corrective Action Plan

ATTACHMENT A

Well Installation Permits

WELL PERMIT APPLICATION - NON-PRODUCTION WELLS

WATER & SEWAGE / MOUNTAIN & RURAL PROGRAMS - ENVIRONMENTAL HEALTH DIVISION
5050 COMMERCE DRIVE, BALDWIN PARK, CA 91706 (626) 430-5380 FAX (626) 813-3016

DATE: 5/24/05

X NEW WELL, CONSTRUCTION	X MONITORING	___ HEAT EXCHANGE
___ RECONSTRUCTION OR RENOVATION	___ CATHODIC	___ OTHER (Specify):
___ DECOMMISSIONING	___ INJECTION	
___ OTHER:	___ EXTRACTION	

WELL LOCATION

SITE ADDRESS: 1451 KNOX STREET	CITY: LOS ANGELES		ZIP CODE: 90501
Township	Range	Section	Map Book Page/ Grid: THOMAS BROS. P.763 J-3
NO. OF WELLS IN EACH PARCEL:		Attach site map with well locations: See Attached	

WELL STRUCTURE

Type and Size of Production Casing	
Sanitary / Annular Sealing Material	
Depth of Sanitary / Annular Seal	
Conductor Casing Seal	

CONSULTANT

Company	HALEY & ALDRICH, INC.
Contact Person	SCOTT ZACHARY / PAUL SONES
Address	7040 FRIARS RD. STE. 220
City, State Zip	SAN DIEGO, CA 92108
Telephone	619.280.9210

IF WELL AND GEOLOGIC CONDITIONS ENCOUNTERED IN THE FIELD ARE FOUND TO DIFFER FROM THE SCOPE OF WORK PRESENTED TO THIS OFFICE, WORK PLAN MODIFICATIONS MAY BE REQUIRED

OWNER / DRILLER INFORMATION

Well Owner	BOEING REALTY CORP.
Address	3855 LAKEWOOD BLVD. Bldg. 14
City / Zip Code	LONG BEACH, CA 90846
Telephone	818.586.6015
Well Driller	WDC EXPLORATION & WELLS
Address	5566 ARROW HIGHWAY
City / Zip Code	MONTCLAIR, CA 91763
C-57 License No.	283326
Telephone	800.974.2769

WELL DECOMMISSIONING

Well Depth log / records	
Method of Well Assessment	
Depth and Number of Perforations	
Type of Perforator Size of Perforations	
Type and Amount of Sealant	
Method of Upper Seal Pressure Application	

DISPOSITION OF PERMIT (Department Use Only)

THIS PERMIT IS CONSIDERED COMPLETE WHEN THE WORK PLAN IS APPROVED AND WHEN THE WELL COMPLETION LOG IS RECEIVED. NO WELL CONSTRUCTION OR DECOMMISSIONING CAN BE INITIATED WITHOUT THE WORK PLAN APPROVAL FROM THIS DEPARTMENT.

WORK PLAN APPROVAL
(This Approval is Valid for 180 Days)

Date	REHS
6-9-05	[illegible]

Conditions: Maintain the required setback for the sewer and water lines.

FINAL INSPECTION

Date	REHS

FINAL COMPLETION APPROVAL

Date	REHS

I hereby agree to comply in every respect with all the regulations of the County Environmental Health Division and with all ordinances and laws of the County of Los Angeles and the State of California pertaining to well construction, reconstruction and decommissioning. Upon completion of the well and within thirty days thereafter, I will furnish the Environmental Health office with a completion log of the well giving date drilled, depth of the well, perforations in the casing, and any other data deemed necessary by County Environmental Health Division.

Paul R. Sones
Applicant's Signature

Applicant Name: (PRINT) PAUL R. SONES
Telephone: 619.280.9210
FAX: 619.280.9415

76A66LA
H-13 (Rev. 05/2001)

SERVICE APPLICATION REQUEST AND FEE COLLECTION
COUNTY OF LOS ANGELES – DEPARTMENT OF HEALTH SERVICES' PUBLIC HEALTH PROGRAMS – ENVIRONMENTAL HEALTH

SERVICE REQUEST APPLICATION

INSTRUCTIONS

1. Check the TYPE OF SERVICE requested and attach the required non-refundable fee to the application. Make the money order or check payable to LOS ANGELES COUNTY TREASURER, DO NOT SEND CASH. This application is nontransferable.

FEE REQUIRED*		TYPE OF SERVICE
6 x $176 = $1,056.–	☑	MONITORING WELL CONSTRUCTION/DECOMMISSIONING Complete and attach a Non-Production Well -Well Permit Application
_____	☐	WELL CONSTRUCTION, RENOVATION OR DECOMMISSIONING PERMIT Complete and attach a Production Well-Well Permit Application
_____	☐	PRIVATE SEWAGE DISPOSAL SYSTEM CONSTRUCTION PERMIT
_____	☐	PRIVATE SEWAGE DISPOSAL RENOVATION / EXPANSION
_____	☐	INSPECTION OF MOUNTAIN CABIN SITE as required by the United States Forest Service
_____	☐	SEPTIC TANK REPLACEMENT
_____	☐	INSPECTION OF EXISTING PRIVATE SEWAGE SYSTEM
_____	☐	WATER SUPPLY TEST AND CERTIFICATION as required by U.S. Department of Agriculture

* Refer to Schedule of Fees for the current fiscal year. Field personnel cannot accept fees.

2. Check with the Contact Office stamped below for requirements or information

3. Deliver the completed application, money order or check with the forms indicated to:

County of Los Angeles
Mountain and Rural Program / Water, Sewage, & Subdivision Program
5050 Commerce Drive, Baldwin Park, CA 91706
(626) 430-5380 FAX (626) 813-3016

4. Please contact office noted above or office indicated below, after you have received your receipt, to request an inspection.

1541 KNOX ST., LOS ANGELES, CA 90501 (THOMAS BROS. P.763, J-3) 5/24/05
Service/ Job Location Address | City | Zip | Assessor Map Book | Page | Parcel # | Date

BOEING REALTY CORP. 3855 LAKEWOOD BLVD. BLDG. 1A 818-586-6015
Owner / Applicant Name | Address/Zip LONG BEACH, CA 90846 | Phone No.

HALEY & ALDRICH, INC. 9040 FRIARS RD. #220 619-280-9210
Contractor's Name | Address/Zip SAN DIEGO, CA 92108 | Phone No.

Co. Engineer Plan Check No. _____ Tract no. _____ Lot No. _____ No. Bedrooms _____ Fixture Unit Count _____
(Complete the line above for Private Sewage Disposal System Construction or Renovation Application)

CONTACT OFFICE	DEPARTMENT STAMP

Typical Monitoring Well Construction Diagram
Former Boeing C-6 Facility
1541 Knox Street
Los Angeles, California

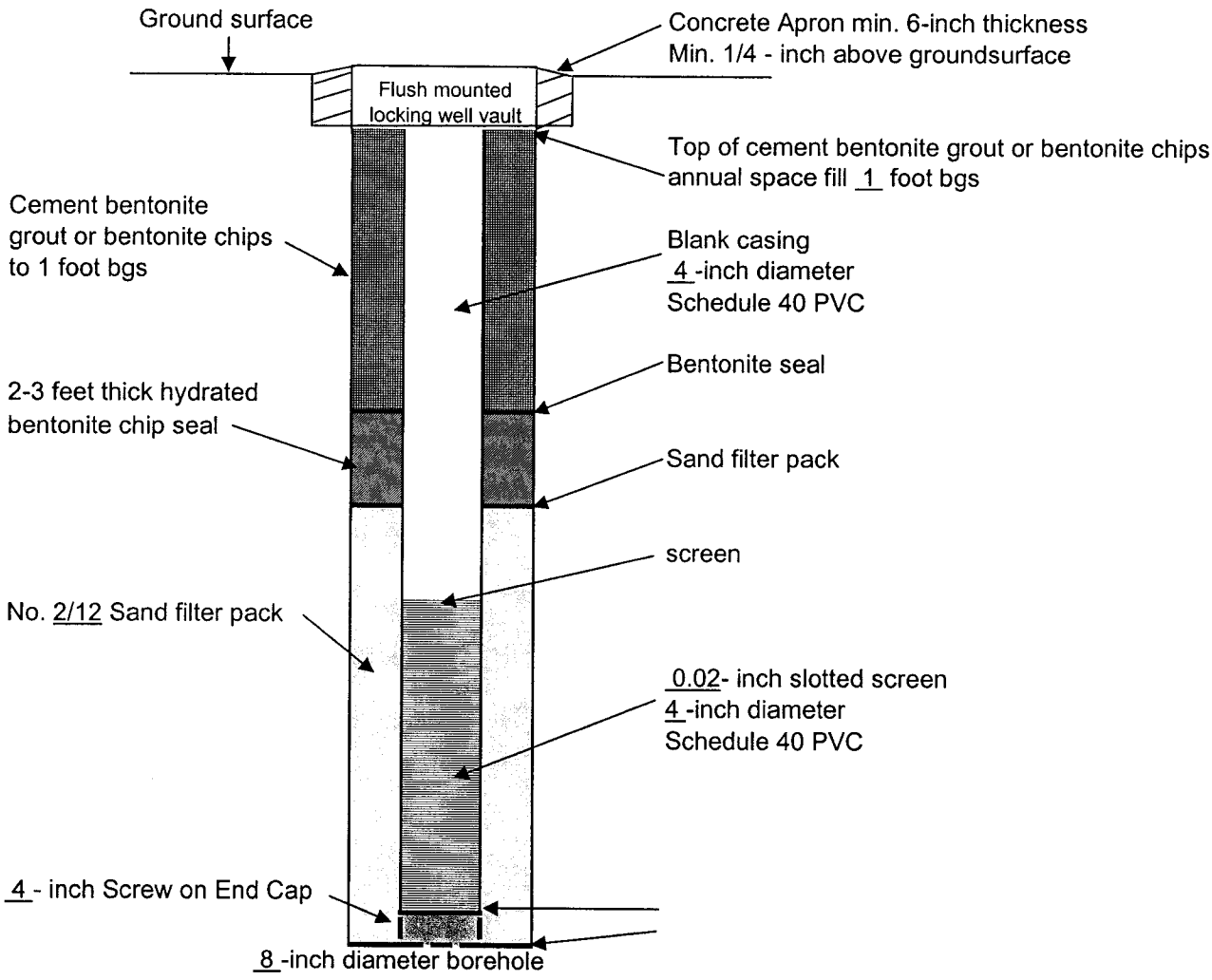

<g:\forms\field\welldiagram>

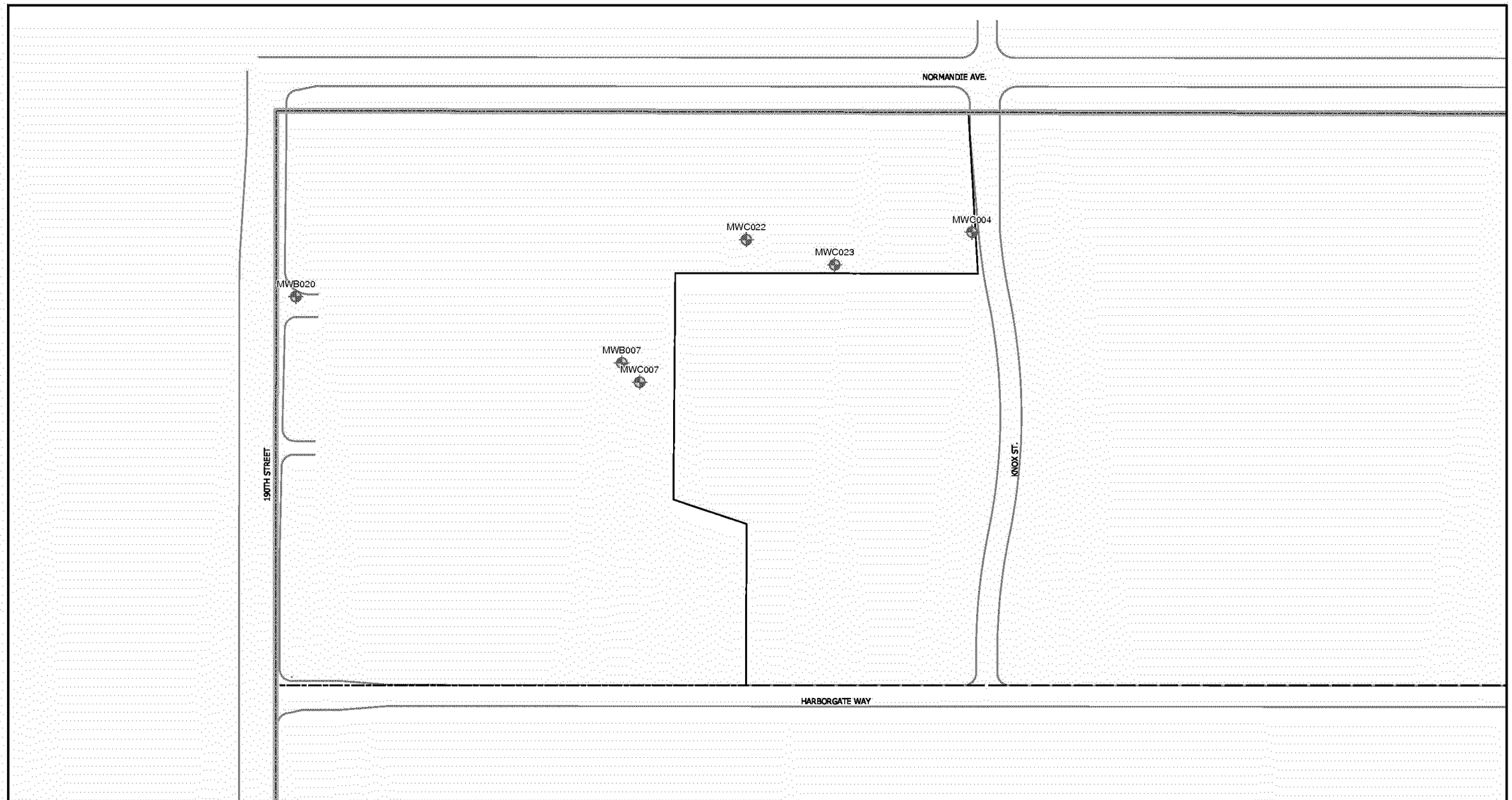

LEGEND

- Proposed Groundwater Monitoring well Location
- Property Boundary
- Parcel Boundary

N

All Locations and Dimensions are Approximate

0 100 200 400 Feet

HALEY & ALDRICH

UNDERGROUND ENGINEERING & ENVIRONMENTAL SOLUTIONS

BOEING REALTY CORPORATION
FORMER C-6 FACILITY
LOS ANGELES, CALIFORNIA

FIGURE 1

PROPOSED GROUNDWATER MONITORING WELL LOCATIONS

SCALE AS SHOWN

MAY 2005

WELL PERMIT APPLICATION - NON-PRODUCTION WELLS

WATER & SEWAGE / MOUNTAIN & RURAL PROGRAMS - ENVIRONMENTAL HEALTH DIVISION
5050 COMMERCE DRIVE, BALDWIN PARK, CA 91706 (626) 430-5380 FAX (626) 813-3016

DATE: 6/9/05

X NEW WELL CONSTRUCTION	___ MONITORING	___ HEAT EXCHANGE
___ RECONSTRUCTION OR RENOVATION	___ CATHODIC	___ OTHER (Specify) :
___ DECOMMISSIONING	X INJECTION	
___ OTHER:	___ EXTRACTION	

WELL LOCATION

SITE ADDRESS 1451 KNOX ST.	CITY LOS ANGELES		ZIP CODE 90501
Township	Range	Section	Map Book Page/ Grid THOMAS BROS. P.703 J-3
NO. OF WELLS IN EACH PARCEL:		Attach site map with well locations See Attached	

WELL STRUCTURE

Type and Size of Production Casing	See attached figure
Sanitary / Annular Sealing Material	
Depth of Sanitary / Annular Seal	
Conductor Casing Seal	

CONSULTANT

Company	HALEY & ALDRICH, INC.
Contact Person	SCOTT ZACUARY / PAUL JONES
Address	9040 FRIARS RD., SUITE 220
City , State Zip	SAN DIEGO, CA 92108
Telephone	619.280.9210

IF WELL AND GEOLOGIC CONDITIONS ENCOUNTERED IN THE FIELD ARE FOUND TO DIFFER FROM THE SCOPE OF WORK PRESENTED TO THIS OFFICE, WORK PLAN MODIFICATIONS MAY BE REQUIRED

OWNER / DRILLER INFORMATION

Well Owner	BOEING REALTY CORP.
Address	3855 LAKEWOOD BLVD.
City / Zip Code	BUILDING 1A LONG BEACH, CA 90846
Telephone	818.585.5860.6015
Well Driller	WDC EXPLORATION + WELLS
Address	55060 ARROW HIGHWAY
City / Zip Code	MONTCLAIR, CA 91763
C-57 License No.	283326
Telephone	800.974.2769

DISPOSITION OF PERMIT (Department Use Only)
THIS PERMIT IS CONSIDERED COMPLETE WHEN THE WORK PLAN IS APPROVED AND WHEN THE WELL COMPLETION LOG IS RECEIVED. NO WELL CONSTRUCTION OR DECOMMISSIONING CAN BE INITIATED WITHOUT THE WORK PLAN APPROVAL FROM THIS DEPARTMENT.

WORK PLAN APPROVAL
This Approval is Valid for 180 Days

Date 6/14/05 REHS Robert Hughes

Conditions

Maintain the required setback for the sewer and water lines.

WELL DECOMMISSIONING

Well Depth log / records	
Method of Well Assessment	
Depth and Number of Perforations	
Type of Perforator Size of Perforations	
Type and Amount of Sealant	
Method of Upper Seal Pressure Application	

FINAL INSPECTION

Date	REHS

PERMIT ISSUED
The well log must be submitted to this Department prior to issuance of the final approval

Date	REHS

I hereby agree to comply in every respect with all the regulations of the County Environmental Health Division and with all ordinances and laws of the County of Los Angeles and the State of California pertaining to well construction, reconstruction and decommissioning. Upon completion of the well and within thirty days thereafter, I will furnish the Environmental Health office with a completion log of the well giving date drilled, depth of the well, perforations in the casing, and any other data deemed necessary by County Environmental Health Division.

Paul R. Jones
Applicant's Signature

Applicant Name: (PRINT) Paul R. Jones
Telephone: (619) 285-7102

76A668-A
H-13 (Rev. 01/2001)

SERVICE APPLICATION REQUEST AND FEE COLLECTION
COUNTY OF LOS ANGELES – DEPARTMENT OF HEALTH SERVICES'
PUBLIC HEALTH PROGRAMS – ENVIRONMENTAL HEALTH

SERVICE REQUEST APPLICATION

INSTRUCTIONS

1. Check the TYPE OF SERVICE requested and attach the required non-refundable fee to the application. Make the money order or check payable to LOS ANGELES COUNTY TREASURER, DO NOT SEND CASH. This application is nontransferable.

FEE REQUIRED*		TYPE OF SERVICE
87 x $288 = $25,056.00	☒	MONITORING WELL CONSTRUCTION/DECOMMISSIONING Complete and attach a Non-Production Well -Well Permit Application
_____	☐	WELL CONSTRUCTION, RENOVATION OR DECOMMISSIONING PERMIT Complete and attach a Production Well-Well Permit Application
_____	☐	PRIVATE SEWAGE DISPOSAL SYSTEM CONSTRUCTION PERMIT
_____	☐	PRIVATE SEWAGE DISPOSAL RENOVATION / EXPANSION
_____	☐	INSPECTION OF MOUNTAIN CABIN SITE as required by the United States Forest Service
_____	☐	SEPTIC TANK REPLACEMENT
_____	☐	INSPECTION OF EXISTING PRIVATE SEWAGE SYSTEM
_____	☐	WATER SUPPLY TEST AND CERTIFICATION as required by U.S. Department of Agriculture

* Refer to Schedule of Fees for the current fiscal year. Field personnel cannot accept fees.

2. Check with the Contact Office stamped below for requirements or information
3. Deliver the completed application, money order or check with the forms indicated to:

County of Los Angeles
Mountain and Rural Program / Water, Sewage, & Subdivision Program
5050 Commerce Drive, Baldwin Park, CA 91706
(626) 430-5380 FAX (626) 813-3016

4. Please contact office noted above or office indicated below, after you have received your receipt, to request an inspection.

1451 KNOX ST. LOS ANGELES 90501 Thomas Bros. P.743 J-3 6/9/05
Service/ Job Location Address | City | Zip | Assessor Map Book | Page | Parcel # | Date

BOEING REALTY CORP. 3855 LAKEWOOD BLVD. Bldg. 1A 818.586.6015
Owner / Applicant Name | Address/Zip LONG BEACH, 90846 | Phone No.

HALEY & ALDRICH, INC 9040 FRIARS RD. #220 619.280.9210
Contractor's Name | Address/Zip SAN DIEGO CA 92108 | Phone No.

Co. Engineer Plan Check No. _____ Tract no. _____ Lot No. _____ No. Bedrooms _____ Fixture Unit Count _____
(Complete the line above for Private Sewage Disposal System Construction or Renovation Application)

CONTACT OFFICE	DEPARTMENT STAMP

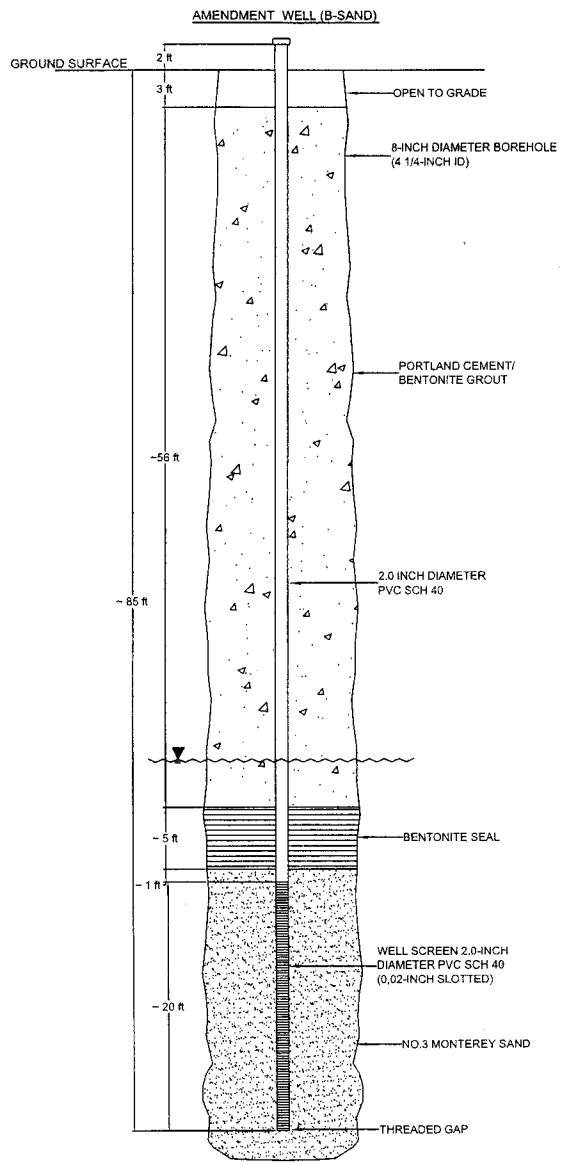

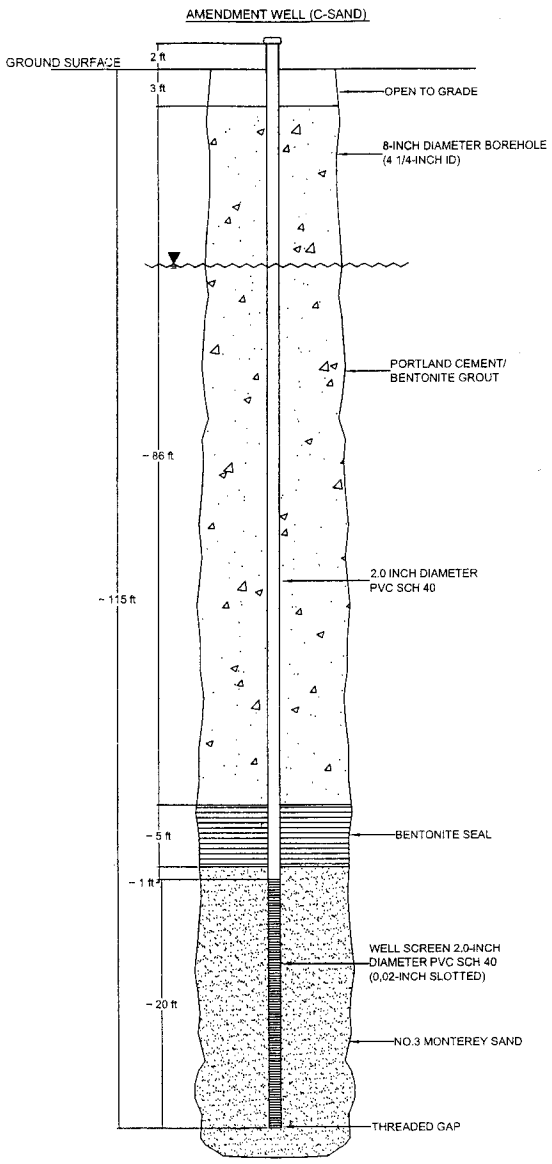

DRAFT

HALEY & ALDRICH

UNDERGROUND ENGINEERING & ENVIRONMENTAL SOLUTIONS

BOEING REALTY CORPORATION
FORMER C-6 FACILITY (BUILDING 1/36 AREA)
LOS ANGELES, CALIFORNIA

FIGURE 4

TYPICAL CONSTRUCTION DETAIL
AMENDMENT WELLS

SCALE: NOT TO SCALE

AUGUST 2004

(604) 29026B01

BOE-C6-0051560

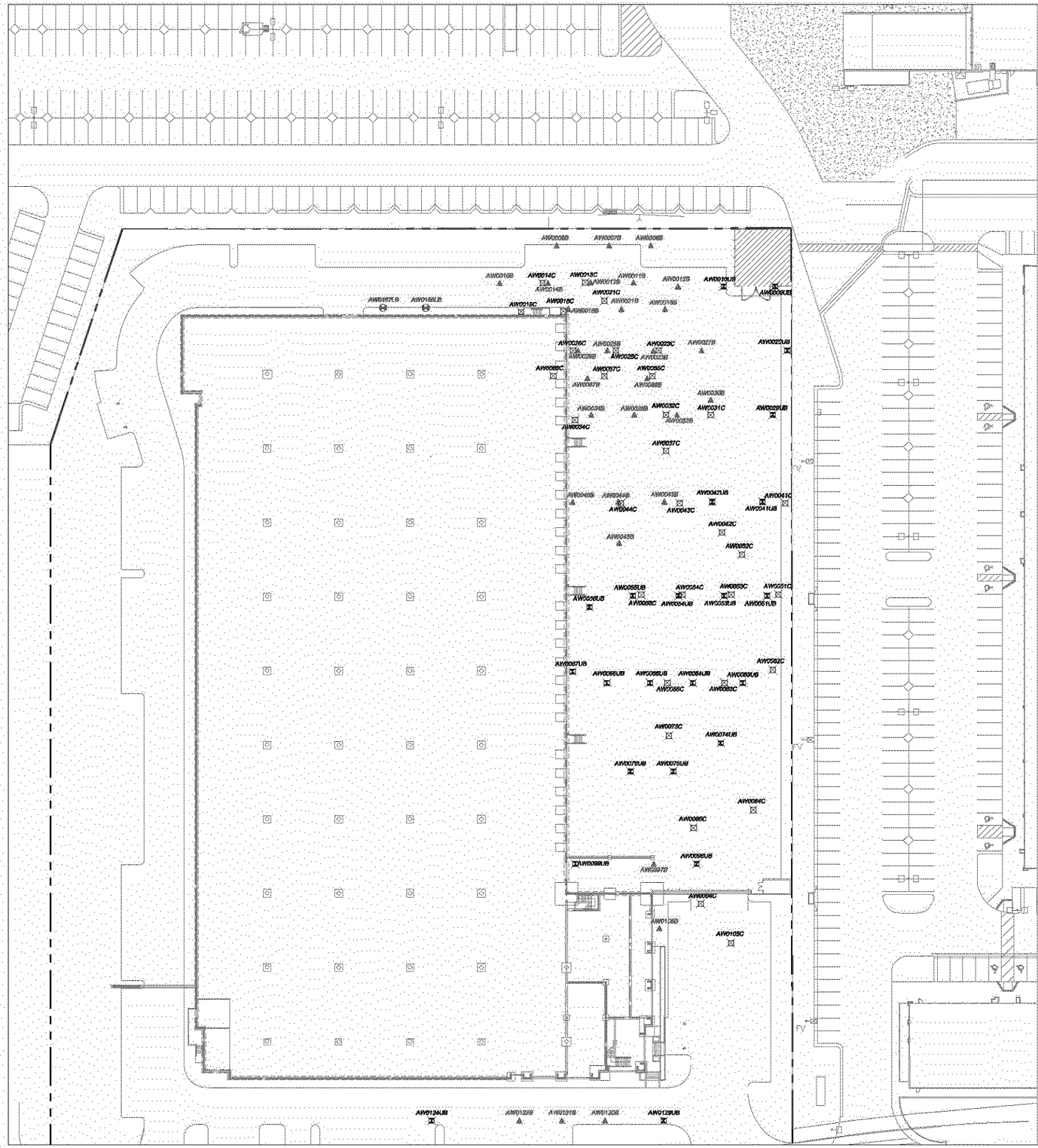

LEGEND

- LOWER B-SAND BIOAMENDMENT INJECTION WELL LOCATION
- UPPER B-SAND BIOAMENDMENT INJECTION WELL LOCATION
- UPPER/LOWER B-SAND BIOAMENDMENT INJECTION WELL LOCATION
- C-SAND BIOAMENDMENT INJECTION WELL LOCATION
- PARCEL BOUNDARY

N

0 40 80
SCALE IN FEET

ALL LOCATIONS AND DIMENSIONS ARE APPROXIMATE

HALEY & ALDRICH

UNDERGROUND ENGINEERING & ENVIRONMENTAL SOLUTIONS

BOEING REALTY CORPORATION
FORMER C-6 FACILITY
LOS ANGELES, CALIFORNIA

FIGURE 1

PHASE IV AMENDMENT WELL INSTALLATION

SCALE: AS SHOWN

JUNE 2005

ATTACHMENT B

Pre-field Activities Checklist, Standard Work Practices,
Incident Reporting Procedures, and Underground Service Alert Notification Forms

Boeing Pre-field Checklist

This pre-field activities checklist has been prepared to facilitate compliance with workplans, protocols, permits, and procedures.

Boeing Project Name: Former Boeing C-6 Site
Field Activity: Installation of 6 Parcel A Monitoring Wells
Planned Start Date: 31 May 2005

Contact Information:

Consultant/Contractor (Person & phone #)

Project Manager	**Scott Zachary**	**(619) 993-1791**
Project Hydrogeologist	**Paul Sones**	**(619) 871-9024**
Chief Field Engineer/Technician	**Jeremy Squire**	**(714) 709-3725**
Field Hydrogeologist	**Travis Hammond**	**(619) 987-1767**
Health & Safety Officer:	**Travis Hammond**	**(619) 987-1767**
Other		

Boeing

Project Manager	**Stephanie Sibbett-Brutocao**	
		(310) 346-8322 cell
		(562) 733-2228 office
Technical Specialist	**John Scott**	**(818) 586-4533**
Field Representatives	**Dennis Carlson**	**(818) 535-7438**
Permits Contact	None	
Waste Disposal Specialist	**Scott Lattimore**	**(562) 593-3902**
Legal:	None	
Communications:	None	
Other:		

Subcontractors (as applicable)

No. 1	**WDC Exploration & Wells (800) 974-4269**
No. 2	**Spectrum ESI (818) 565-3590**
No. 3	**STL Laboratory (714)258-8610 X-313**

Property Owners (as applicable)

No. 1	**Walmart – To be Determined**
No. 2	

Work Plans

Work Plan prepared for work? **Yes**

Name of Work Plan: **Site-Wide Groundwater Monitoring Work Plan, Boeing Realty Corporation, Former C-6 Facility, Los Angeles, CA, Prepared by Haley & Aldrich, Inc., Dated: 31 March 2003 and Building 1/36 Area (Parcel C) Source-Area Groundwater In-Situ Reactive Zone Pilot Study, Boeing Realty**

Corporation, Former C-6 Facility, Los Angeles, CA, Prepared by Arcadis G&M, Dated 10 May 2002..

Was Work Plan Submitted to a regulatory Agency for approval? **Yes**

Was approval received? **Yes** Date? **5/28/03 (H&A) and 29 October 2003 (Arcadis)**

Is Work Plan latest version? **Yes**

Were there any amendments? **No**

Does Work Plan contain contingency plan (scope for potential unknowns)? **No**

Type of Work to be performed: **Install 4 C-Sand and 2 B-Sand monitoring wells on Parcel A.**

Technical/Site-Specific

Confirm contractors have sufficient experience (e.g. min. 5 years experience). **Yes**

Have work locations been marked? **Yes**

Are there any obstacles to performing work? **Site is recently paved and an active construction site, may have to coordinate closure of drill sites with NearCal (General Contractor)**

If yes-method to clear obstacles? **Coordinate with NearCal General Contractor on day of drilling**

Is traffic control necessary to perform the work? **No – drilling in parking lots**

If yes-is there a Traffic Control Plan? **NA**

Has an on-site review been conducted to confirm conditions for necessary scope of work? **Yes by Paul Sones on 5/20/05.**

Is a decision tree available if conditions do not meet original plan? **No**

£ Will any locations be surveyed? **No** If so, does the surveyor have the correct coordinate system and datum for the site that is consistent with EDMS? **NA**

Health & Safety

Health & Safety Plan Submitted to Agency? **Yes**

£ Health & Safety Plan reviewed by Field Team? **Yes**

£ Standard Work Practices Form been distributed to Field Team? **Yes**

£ Traffic Control Plan (if applicable) reviewed by Field Team? **NA**

Emergency and Incident Reporting Procedures with contact and emergency numbers **Yes – Submitted to Boeing on 5/23/05**

£ Proper PPE on Site? **To be done on 5/31/05**

Extra PPE for Visitors? **No**

Visitor Site Access and PPE requirements.

£ Have OSHA certificates and currency been confirmed for workers? **To be done by 5/31/05**

Have workers received proper safety trainings specific to their tasks (e.g., excavation, confined space, etc.)? **Yes**

Any Excavations including trench work? **None**

If Yes, has excavation plan been prepared and reviewed? **NA**

§ Does plan include geotechnical calculations/considerations? **NA**

§ By whom?_____ Third Party & Registered?_____

Completed any site-specific pre-excavation checklist? **None**

Is there a backfill plan with import soil and geotechnical plans? **NA**

§ Contingency for a larger/deeper excavation? **NA**

Health & Safety Officer **Travis Hammond**

£ Perform subcontractor equipment safety audit prior to work start (guards, safety switches, General equipment condition) **To be Done on 5/31/05**

£ Pre-Field Tailgate Meetings: **To be done on 5/31/05 and each field day thereafter**

- Worker Safety
- Equipment Safety
- Traffic Safety

£ Vehicular Safety: **To be done on 5/31/05, Discussions to include:**

- Heavy Equipment/Drill Rig movement
- Traffic in parking lots
- Forklift movement of soil cuttings and drummed water in parking lots and/or public streets

£ Daily Tailgate/Safety Briefings **To be done on 5/31/05 and each field day thereafter**

£ Proper monitoring equipment with proper calibration chemicals available? **To be available on 5/31/05**

£ Safety Zones established and how maintained? **Areas to be delineated with barricades and yellow "CAUTION" tape at the start of each field day**

£ All Field Staff have Boeing Emergency Notification Card on their person? **To be available on 5/31/05**

£ Have OSHA Case Rates of subcontractors been checked? Are they satisfactory for the planned work? **Not Yet – To be done by Paul Sones by 5/31/05**

Utilities

Have utilities been researched? **No**

Are utility plans available? **No, not a complete set**

q Have utility plans been reviewed for work conflicts? **NA**

q If yes, what plans _____

q Has site been field-checked for utilities? **Done on jobwalk on 5/20/05 by Paul Sones and to be cleared with geophysical subcontractor by 5/31/05**

q Has DigSafe/DigAlert been notified? **To be notified by Paul Sones on 5/24/05**
Confirmation #:

q Has independent utility locator service been completed? **To be done on 5/31/05**

Any overhead utility present that may interfere with work? **None** If yes, can work be moved? **NA**

Will hand-augering be conducted? **Yes** To what depth? **10 feet**

Is any utility lock-out/tag-out needed? **No**

If water or electricity is required, is it available at the site? **Water required, metered hydrant to be provided by WDC, No electricity required.**

q Other

Legal

Confirm with Boeing Project Manager that legal issues are in order to perform field work. **To be done by Paul Sones prior to 5/31/05**

Do Proposition 65 notifications need to be posted at the site? **No**

q Are certificates of insurance in place for each subcontractor for offsite work? **Yes – received on 12/14/04**

Access Agreements

Confirm with Boeing Project Manager if access agreements are needed. **To be done**

Are special pre-work notifications required by the access agreements? **To be determined**

Who is the on-Site contact/tele # for work to be performed? **Parcel A property owners**

Are copies of access agreements needed on site? **To be determined**

Do special work conditions need to be maintained per the access agreement? **To be determined**.

Are there special work hours per the access agreement? **To be determined**

Are traffic plans or traffic control necessary for work? **No**

q Has traffic control pan been distributed to drivers? **NA**

Has the Property Owner (if applicable) been notified of, and provided approval for, planned activities and scheduling? **To be done**

q If yes-contact name and date of approval_____

q Other

Notifications

Has Boeing Project Manager been notified of the work start date/time? **Yes**

Has Boeing Technical Specialist been notified of the work start date/time? **Yes**

q Has Boeing Permit Specialist been notified of the work start date/time? **NA**

Has Boeing Waste Disposal Specialist been notified of the work start date/time? **Emailed on 5/23/05.**

Is Regulatory Agency (ies) notification Required?

Lead Agency **LARWQCB**

q Support Agency _____

- q Local Agency
  Other: **L.A. Co. DHS (Well permits)**

  If yes-what advance notice is required? **Minimum of 48 hrs**
- q Have they been notified? **Not yet** When **5/25/05** How **Telephone by Paul Sones**
- q Has laboratory been notified of incoming samples using the Lab Task Order (LTO) form? **To be done by 5/31/05 by Paul Sones**
- q Has Property Owner (if applicable) been notified of the work start date/time? **To be determined** When? **Prior to 5/31/05** How? **Telephone**

Permits/Regulatory Agencies/Licenses

- q Lead Regulatory Agency/Contact **Ana Townsend, LARWQCB**
- q Additional Regulatory Agencies:
  - q Air Quality Agency
  - q County Health Department **Well Permits**
  - q City Health Department
  - q City Building Department
  - q Are permits required for work? **Yes**
    Drilling Permit **Yes**
  - q WDR/Waste Discharge Permit **No**
  - q Excavation Permit **No**
  - q Rule 1166 Mitigation Plan/Permit **No**
  - q Grading Permit **No**
  - q City Business License **To be provided by Driller**
  - q Facility Hot Work (torches, cutting, grinding)? **No**
  - q Other
- q Has Boeing Permit Specialist reviewed and approved the permits for performing the work? **No**

  Are pre-work notifications required for permits? **Yes**

  If yes, which permits and how much advance notice **LACDHS Well Permit – 48 hrs.**
- q Are there any conditions in the permit that could stop work? **No**
- q If yes, what are the conditions? _____
- q Do mitigation measures exist if these conditions occur?_____

  What licenses are required to do work? **California Driller's License**
- q Have contractor licenses been verified **Yes – WDC = C57 # 283326 Exp. 6/30/06**

Waste Management

- q Type(s) of waste to be generated: **Soil cuttings, development and decon water, trash.**
- q Anticipated Volume to be generated; **< 20 c.y. soil, 1,500 gallons water**

How will each type of waste be stored?

Decon Water – **in Boeing provided 55-gallon drums**
Development Water – **in Baker Tank to be located on Lot 8**
Soil – **in roll-off bins on Lot 8**
PPE – **bagged and placed in trash**
Other – **Trash and well completion materials – placed in WDC's dumpster**

- Profile Testing Decision Tree available? **No**
- Has Boeing Waste Specialist been notified? **Yes on 5/23/05 by email by Paul Sones** Who? **Scott Lattimore**
- Has Boeing waste contractor been contacted to confirm contract is in place (if applicable) within 2 weeks in advance of field work? **To be done by Scott Lattimore**
- Have proper containers been coordinated through Boeing Waste Specialist? **Yes on 5/23/05**
- If not-why? _____
- Have proper waste container labels and labeling procedures been obtained from the Boeing Waste Specialist? **Yes**
- How will waste be profiled? **Existing profiles for Site, or Soil and water samples collected from bins/tank at end of field work**

  Is waste going to a Boeing-approved facility? **Yes**

  Has on-site storage times been confirmed? **Yes**

  Any special waste handling/disposal needs? **None anticipated**
- Is fill soil being imported? **NA** If so, has it been selected and pre-screened for acceptance **NA**

  Confirm good housekeeping practices will be conducted at the site. **To be performed and inspected each day**

Portal/EDMS

- Have Sample/Object Numbers/Names been obtained from CH2Mhill? **Yes**
- Have labs been informed of EDMS requirements such as Turn around times and detection limits using the Lab Task Order Form (LTO)? **NA**
- Do you plan to use the electronic chain of custody form to streamline EDD delivery? **No**
- Other

Schedule

- Scheduled start date of field work **31 May 2005**
- Expected duration of field work **1 week**
- Contingency plan if work goes longer **Coordinate with Boeing and NearCal (general contractor for Parcel A)**

Financial

- Has Boeing approved work order for work? **To be done**

Is there a signed contract confirmed to be in place? **Yes**

Is there a potential for scope/cost changes? **Yes**

If yes-is change-order process established with Boeing Project Manager? **Yes**

Communications

Any special communication requirements? **Yes – if any onsite person receives a public inquiry (passerby, city worker, etc.), the response is simply that environmental drilling is be done for Boeing, and that more information can be obtained from Stephanie Sibbett-Brutocoa or Dennis Carlson.**

Lessons Learned

Has the PM and key personnel reviewed Boeing Lesson Learned memos to ensure that we don't make the same mistakes twice - Yes

Person Filling out Checklist: Paul R. Sones on 5/23/05

Boeing Pre-field Checklist

This pre-field activities checklist has been prepared to facilitate compliance with workplans, protocols, permits, and procedures.

Boeing Project Name: Former Boeing C-6 Site
Field Activity: Phase IV Installation of 83 Amendment Wells
Planned Start Date: 6 June 2005

Contact Information:

Consultant/Contractor (Person & phone #)

Project Manager	**Scott Zachary**	**(619) 993-1791**
Project Hydrogeologist	**Paul Sones**	**(619) 871-9024**
Chief Field Engineer/Technician	**Jeremy Squire**	**(714) 709-3725**
Field Hydrogeologist	**Travis Hammond**	**(619) 987-1767**
Health & Safety Officer:	**Travis Hammond**	**(619) 987-1767**
Other		

Boeing

Project Manager	**Stephanie Sibbett-Brutocao**	
		(310) 346-8322 cell
		(562) 733-2228 office
Technical Specialist	**John Scott**	**(818) 586-4533**
Field Representatives	**Dennis Carlson**	**(818) 535-7438**
Permits Contact	None	
Waste Disposal Specialist	**Scott Lattimore**	**(562) 593-3902**
Legal:	None	
Communications:	None	
Other:	_____	

Subcontractors (as applicable)

No. 1	**WDC Exploration & Wells (800) 974-4269**
No. 2	**Innovative Construction Solutions (714) 893-6366**
No. 3	**Spectrum ESI (818) 565-3590**
No. 4	**STL Laboratory (714)258-8610 X-313**

Property Owners (as applicable)

No. 1	**Boeing Realty Corp.**
No. 2	

Work Plans

Work Plan prepared for work? **Yes**

Name of Work Plan: **Building 1/36 Area (Parcel C) Source-Area Groundwater In-Situ Reactive Zone Pilot Study, Boeing Realty Corporation, Former C-6 Facility, Los Angeles, CA, Prepared by Arcadis G&M, Dated 10 May 2002.**.

Was Work Plan Submitted to a regulatory Agency for approval? **Yes**

Was approval received? **Yes** Date? **29 October 2003**

Is Work Plan latest version? **Yes**

Were there any amendments? **No**

Does Work Plan contain contingency plan (scope for potential unknowns)? **No**

Type of Work to be performed: **Install 83 Amendment Wells on Lot 8 as Phase IV of Installation Program.**

Technical/Site-Specific

Confirm contractors have sufficient experience (e.g. min. 5 years experience). **Yes**

Have work locations been marked? **The initial 14 locations to be staked by 6/6/05, remainder to follow in stages**

Are there any obstacles to performing work? **Site is an active construction site, may have to coordinate access to drill sites with Mille-Severson (General Contractor). Also, recently buried utility pipelines in areas.**

If yes-method to clear obstacles? **Coordinate with Mille-Severson General Contractor at start of drilling**

Is traffic control necessary to perform the work? **No**

If yes-is there a Traffic Control Plan? **NA**

Has an on-site review been conducted to confirm conditions for necessary scope of work? **Yes by Scott Zachary on 6/1/05.**

Is a decision tree available if conditions do not meet original plan? **No**

Will any locations be surveyed? **Yes** If so, does the surveyor have the correct coordinate system and datum for the site that is consistent with EDMS? **Yes**

Health & Safety

Health & Safety Plan Submitted to Agency? **Yes**

Health & Safety Plan reviewed by Field Team? **Yes**

Standard Work Practices Form been distributed to Field Team? **Yes**

£ Traffic Control Plan (if applicable) reviewed by Field Team? **NA**

Emergency and Incident Reporting Procedures with contact and emergency numbers **Yes – Submitted to Boeing on 5/23/05**

£ Proper PPE on Site? **To be done on 6/6/05**

Extra PPE for Visitors? **No**

Visitor Site Access and PPE requirements.

£ Have OSHA certificates and currency been confirmed for workers? **To be done by 6/6/05**

Have workers received proper safety trainings specific to their tasks (e.g., excavation, confined space, etc.)? **Yes**

Any Excavations including trench work? **Yes**

If Yes, has excavation plan been prepared and reviewed? **No**

§ Does plan include geotechnical calculations/considerations? **NA**

§ By whom?_____ Third Party & Registered?_____

Completed any site-specific pre-excavation checklist? **To be done prior to excavation by ICS**

Is there a backfill plan with import soil and geotechnical plans? **NA**

§ Contingency for a larger/deeper excavation? **NA**

Health & Safety Officer **Travis Hammond**

£ Perform subcontractor equipment safety audit prior to work start (guards, safety switches, General equipment condition) **To be Done on 6/6/05**

£ Pre-Field Tailgate Meetings: **To be done on 6/6/05 and each field day thereafter**

- Worker Safety
- Equipment Safety
- Traffic Safety

£ Vehicular Safety: **To be done on 6/6/05, Discussions to include:**

- Heavy Equipment/Drill Rig movement
- Traffic on Site
- Forklift movement of soil cuttings and water
- Dust control during movement/drilling

£ Daily Tailgate/Safety Briefings **To be done on 6/6/05 and each field day thereafter**

£ Proper monitoring equipment with proper calibration chemicals available? **To be available on 6/6/05**

£ Safety Zones established and how maintained? **If other contractors in area, areas to be delineated with yellow "CAUTION" tape at the start of each field day**

£ All Field Staff have Boeing Emergency Notification Card on their person? **To be available on 6/6/05**

£ Have OSHA Case Rates of subcontractors been checked? Are they satisfactory for the planned work? **No**

Utilities

Have utilities been researched? **No**

Are utility plans available? **Designed locations of Recently installed utilities are on base map with AW locations. Additional review of as-built plans with Mille-Severson will be performed prior to drilling operations**

q Have utility plans been reviewed for work conflicts? **To be done on 6/6/05**

q If yes, what plans **Mille-Severson Site As-built plans**

q Has site been field-checked for utilities? **To be done on 6/6/05**

Has DigSafe/DigAlert been notified? **Notified by Paul Sones on 6/2/05**
Confirmation #: **A1531364**

q Has independent utility locator service been completed? **None**

Any overhead utility present that may interfere with work? **None** If yes, can work be moved? **NA**

Will hand-augering be conducted? **Yes at selected locations near recently installed pipelines** To what depth? **5 to 10 feet depending on depth of pipelines in area**

Is any utility lock-out/tag-out needed? **No**

If water or electricity is required, is it available at the site? **Water required, metered hydrant to be provided by WDC, No electricity required.**

q Other

Legal

Confirm with Boeing Project Manager that legal issues are in order to perform field work. **Yes**

Do Proposition 65 notifications need to be posted at the site? **No**

Are certificates of insurance in place for each subcontractor for offsite work? **Yes – received on 12/14/04**

Access Agreements

Confirm with Boeing Project Manager if access agreements are needed. **Done**

Are special pre-work notifications required by the access agreements? **None**

Who is the on-Site contact/tele # for work to be performed? **Dennis Carlson (818) 535-7438**

Are copies of access agreements needed on site? **NA**

Do special work conditions need to be maintained per the access agreement? **NA**

Are there special work hours per the access agreement? **To be determined**

Are traffic plans or traffic control necessary for work? **No**

q Has traffic control pan been distributed to drivers? **NA**

£ Has the Property Owner (if applicable) been notified of, and provided approval for, planned activities and scheduling? **NA**

q If yes-contact name and date of approval_____

q Other

Notifications

Has Boeing Project Manager been notified of the work start date/time? **Yes**

Has Boeing Technical Specialist been notified of the work start date/time? **Yes**

q Has Boeing Permit Specialist been notified of the work start date/time? **NA**

Has Boeing Waste Disposal Specialist been notified of the work start date/time? **Emailed on 5/23/05.**

Is Regulatory Agency (ies) notification Required?

Lead Agency **LARWQCB**

q Support Agency

q Local Agency

Other: **L.A. Co. DHS (Well permits)**

If yes-what advance notice is required? **No**

- q Have they been notified? **NA** When **NA** How **NA**

Has laboratory been notified of incoming samples using the Lab Task Order (LTO) form? **No samples required**

- q Has Property Owner (if applicable) been notified of the work start date/time? **NA** When? **NA** How?

Permits/Regulatory Agencies/Licenses

Lead Regulatory Agency/Contact **Ana Townsend, LARWQCB**

- q Additional Regulatory Agencies:
  - q Air Quality Agency
    County Health Department **Well Permits**
  - q City Health Department
  - q City Building Department
  - q Are permits required for work? **Yes**
    Drilling Permit **Yes**
  - q WDR/Waste Discharge Permit **No**
  - q Excavation Permit **No**
  - q Rule 1166 Mitigation Plan/Permit **No**
  - q Grading Permit **No**
  - q City Business License **To be provided by Driller**
  - q Facility Hot Work (torches, cutting, grinding)? **No**
  - q Other
- q Has Boeing Permit Specialist reviewed and approved the permits for performing the work? **No**

Are pre-work notifications required for permits? **Yes**

If yes, which permits and how much advance notice **LACDHS Well Permit – 48 hrs.**

- q Are there any conditions in the permit that could stop work? **No**
- q If yes, what are the conditions? _____
- q Do mitigation measures exist if these conditions occur?_____

What licenses are required to do work? **California Driller's License**

Have contractor licenses been verified **Yes – WDC = C57 # 283326 Exp. 6/30/06**

Waste Management

Type(s) of waste to be generated: **Soil cuttings, development and decon water, trash.**

Anticipated Volume to be generated; **< 160 c.y. soil, 4,500 gallons water**

How will each type of waste be stored?

Decon Water – **in Boeing provided Baker tank**
Development Water – **in Baker Tank to be located on Lot 8**
Soil – **in roll-off bins on Lot 8**
PPE – **bagged and placed in trash**
Other – **Trash and well completion materials – placed in roll-off bin**

- Profile Testing Decision Tree available? **No**

  Has Boeing Waste Specialist been notified? **Yes on 5/23/05 by email by Paul Sones** Who? **Scott Lattimore**

  Has Boeing waste contractor been contacted to confirm contract is in place (if applicable) within 2 weeks in advance of field work? **To be done by Scott Lattimore**

  Have proper containers been coordinated through Boeing Waste Specialist? **Yes on 5/23/05**

- If not-why? _____

  Have proper waste container labels and labeling procedures been obtained from the Boeing Waste Specialist? **Yes**

  How will waste be profiled? **Existing profiles for Site, or Soil and water samples collected from bins/tank at end of field work**

  Is waste going to a Boeing-approved facility? **Yes**

  Has on-site storage times been confirmed? **Yes**

  Any special waste handling/disposal needs? **None anticipated**

- Is fill soil being imported? **NA** If so, has it been selected and pre-screened for acceptance **NA**

  Confirm good housekeeping practices will be conducted at the site. **To be performed and inspected each day**

Portal/EDMS

Have Sample/Object Numbers/Names been obtained from CH2Mhill? **Yes**

- Have labs been informed of EDMS requirements such as Turn around times and detection limits using the Lab Task Order Form (LTO)? **NA**
- Do you plan to use the electronic chain of custody form to streamline EDD delivery? **No**
- Other

Schedule

Scheduled start date of field work **6 June 2005**

Expected duration of field work **6 weeks**

Contingency plan if work goes longer **Coordinate with Boeing and Mille-Severson (general contractor for Lot 8)**

Financial

Has Boeing approved work order for work? **Yes**

Is there a signed contract confirmed to be in place? **Yes**

Is there a potential for scope/cost changes? **Yes**

If yes-is change-order process established with Boeing Project Manager? **Yes**

Communications

Any special communication requirements? **Yes – if any onsite person receives a public inquiry (passerby, city worker, etc.), the response is simply that environmental drilling is be done for Boeing, and that more information can be obtained from Stephanie Sibbett-Brutocoa or Dennis Carlson.**

Lessons Learned

Has the PM and key personnel reviewed Boeing Lesson Learned memos to ensure that we don't make the same mistakes twice - Yes

Person Filling out Checklist: Paul R. Sones on 6/1/05

HALEY & ALDRICH STANDARD WORK PRACTICES ON FORMER BOEING C-6 SITE

HEALTH AND SAFETY IS OUR NUMBER ONE PRIORITY

SAFETY AND REGULATORY COMPLIANCE IS OUR TOP PRIORITY AND I MUST TAKE THE NECESSARY STEPS TO PROVIDE THIS SERVICE

I AM RESPONSIBLE AND I HAVE THE AUTHORITY TO STOP WORK AT ANY TIME IF SAFETY AND REGULATORY REQUIREMENTS ARE NOT BEING MET

***REGULATORY* COMPLIANCE IS MANDATORY** – No work will begin and/or all work will immediately stop unless **BOTH** of the following are checked off:

£ Yes, I am in compliance with all regulatory health and safety requirements.
£ Yes, I am in compliance with all facility health and safety requirements.

BEFORE STARTING WORK PERFORM THE FOLLOWING:

IF YOU ARE UNSURE OF SAFETY PRACTICES FOR THE PARTICULAR WORK INVOLVED – GET CLARIFICATION PRIOR TO STARTING WORK

£ Complete and Review Site Specific Health and Safety Plan.
£ Obtain MSDS Sheets for chemicals to be brought on site.
£ Review SHEA Flysheet RF034.
£ Verify personnel are listed on Service Company Access Request (SCAR)
£ Complete Pre-field Checklist.
£ Complete and submit Project Impact Form.
£ Complete SHEA Contractors Orientation Checklist.
£ Notify Underground Service Alert and Boeing Utilities before performing any invasive work.
£ Obtain necessary monitoring equipment for the conditions anticipated and verify that it is properly functioning.
£ Perform Health and Safety "Tail Gate Meeting" and fill out form.
£ Calibrate monitoring equipment and log calibration in Field notes.
£ Review scope of work documents, permits, and other related items.
£ Obtain correct Personal Protective Equipment (PPE) for the work to be performed and the chemicals anticipated to be present.
£ If SCAQMD Rule 1166 monitoring is required contact Bill Pearce at (562) 593-3903 for approval prior to proceeding with any work (May be different contact of Boeing Facilities other than Canoga Park).

When utilizing **subcontractors**:

£ Review subcontractors Health and Safety training records.
£ Review Health and Safety plan with the subcontractor.
£ Verify that subcontractors have THEIR Health and Safety Plan
£ Review site "Incident Reporting Procedures".
£ Discuss all likely hazards and known chemicals of potential concern.
£ Discuss the scope of work, work area and site restrictions.
£ Perform "Tail Gate Safety Meeting" with subcontractors.

EMERGENCY AND INCIDENT REPORTING PROCEDURES

EMERGENCY PHONE NUMBER ONSITE DIAL 911
OTHER PHONES DIAL (619) 280-9210 (H&A's San Diego office number)
SITE ADDRESS: 1451 Knox Street (Cross-street Harborgate Way)
Los Angeles (Torrance), CA

EMERGENCY OR INCIDENT REPORTING:
All incidents and regulatory inspections must be reported immediately

Emergency definition: An uncontrolled situation, a major or life threatening injury, a fire, or any event that requires immediate assistance from the Fire Department
Incident definition: *Any event, condition, or action (including near misses) that affects the safety of personnel, does not follow rules and guidelines for work implementation and regulatory compliance onsite*
Examples of Incidents:

– Spilled liquid in an uncontrolled environment
– Working without correct/completed permit in place
– Broken water pipeline

Respond to the incident and get it under control. Once the incident is under control the following **MUST BE COMPLETED:**

1. Contact the following **BOTH** by e-mail and telephone.
When leaving messages and sending emails, include the following:
Date and Time: The date and time the incident occurred
Location: Where the incident occurred, i.e.; Lot 8, Parcel C, 1451 Knox Street…
Description: Describe individuals involved, what happened and what it may affect

Name	Title	E-mail	Phone Number
Stephanie Sibbett-Brutocao	Boeing Project Manager	Stephanie.M.Sibbett-Brutocao@boeing.com	Cell: (310) 346-8322 Work: (562) 733-2228
Dennis Carlson	Boeing Health & Safety	Dennis.Carlson@boeing.com	Cell: (818) 535-7438
Scott Lattimore	Waste Disposal	Scott.N.lattimore@boeing.com	Work: (562) 593-3902 Pager: (562) 877-2954
Scott Zachary	H&A Project Manager	szachary@haleyaldrich.com	Cell: (619) 993-1791 Work: (619) 285-7103
Paul Sones	H&A Senior Hydrogeologist	psones@haleyaldrich.com	Cell: (619) 871-9024 Work: (619) 285-7102
Patrick Keddington	H&A Senior Engineer	pak@haleyaldrich.com	Cell: (619) 985-4286 Work: (619) 285-7107

3. After the incident is under control document in writing and with photographs the sequence of events, locations, date, time, conditions at the time of the incident, people involved and that responded to the incident, and the probable cause of the incident.

INCIDENT REPORTING PROCEDURES
Former C-6 Facility
Los Angeles, California
24 May 2005

INTRODUCTION

This technical memorandum presents incident reporting procedures for the former Boeing C-6 Facility, Parcel C, groundwater remediation program. This program consists of the installation, development and testing of groundwater amendment wells (AWs) and monitoring wells (MWs).

The incident reporting requirements described in this document will differ depending on the severity of the incident. For the purpose of reporting, incidents will fall into two different categories, minor and major. A minor incident is defined as any spill, process upset, or non-life threatening incident that is completely controlled within the confines of the immediate construction area and Site boundaries. A major incident is defined as an uncontrollable situation that results in an injury that is major or life threatening; fire; or other major issues that require immediate assistance from local emergency services.

MINOR INCIDENT REPORTING PROCEDURES

A minor incident is defined as any spill, process upset, or non-life threatening incident that is completely controlled within the confines of the immediate construction area and Site boundaries.

When a minor incident occurs, the first priority is to safely assess the situation, shut down any equipment related to the incident, and seek medical assistance if required. The followings steps will be taken after a minor incident is under control:

1. Record the sequence of events, including probable cause, people who responded to the incident, the extents of the incident, and relevant dates and times.

   Corrective action will be taken to prevent/repair the cause of the incident. Any spills will be cleaned up, and the activity resumed if approved by Boeing. Dennis Carlson and Scott Lattimore at the Boeing Realty Corporation (Boeing) will be notified of any spills prior to resumption of construction activities.

2. After the incident is under control, contact the following Boeing and Haley & Aldrich personnel and inform them of the incident and steps taken to control the situation.

Name	E-mail Address	Phone Number
Stephanie Sibbett-Brutocao	Stephanie.M.Sibbett-brutocao@boeing.com	(310) 346-8322 cell (562) 733-2228 office
Dennis Carlson	Dennis.Carlson@boeing.com	(818) 535-7438 cell
Paul Sones	Psones@HaleyAldrich.com	(619) 285-7102 office (619) 871-9024 cell
Scott Zachary	SPZ@HaleyAldrich.com	(619) 285-7103 office (619) 993-1791 cell
Patrick Keddington	PAK@HaleyAldrich.com	(619) 285-7107 office (619) 9854286 cell

INCIDENT REPORTING PROCEDURES
Former C-6 Facility
Los Angeles, California
24 May 2005

When leaving messages and sending e-mails, state the following information:

Date and Time: The date and time the incident occurred.
Location: Where the incident occurred.
Description: A brief description of the incident and what risks it poses to people, property, and the environment.

3. An e-mail containing the following information will be sent to Boeing for review and then forwarded to the Boeing, for review.

Background and General Description: Briefly describe what the activities were being conducted, equipment (if any) was being used, and why.
Failure Analysis: Describe the root-cause of the incident. Describe the chain of events that led to the incident.
Corrective Actions Taken: Describe what corrective actions have been taken as of the date of the report.
Corrective Action in Process: Describe what additional measures are in process or are being contemplated to minimize the possibility of recurrence.
Figures: Include figures and drawings, as necessary, to convey information.
Appendices: Append relevant information as necessary (i.e., copies of alarm logs, data, etc.).

Additional follow-up actions or responses will be performed at the request of Boeing.

MAJOR INCIDENT AND EMERGENCY REPORTING PROCEDURES

A major incident is defined as an uncontrollable situation that results in an injury that is major or life threatening; fire; or other major issues that require immediate assistance from local emergency services.

When a major incident or emergency occurs, the immediate priorities are to safely get it under control, shut down the equipment (if applicable), and contact emergency services (if applicable). The followings steps will be taken after a major incident or emergency is under control:

1. Record the sequence of events, including probable cause, people who responded to the incident, the extents of the incident, and relevant dates and times.

   Corrective action will be taken to prevent/repair the cause of the incident. Any spills will be cleaned up, and the activity resumed if approved by Boeing Dennis Carlson and Scott Lattimore at the Boeing will be notified of any spills prior to resumption of construction activities.

2. After the incident is under control, contact the following Boeing and Haley & Aldrich personnel and inform them of the incident and steps taken to control the situation.

INCIDENT REPORTING PROCEDURES
Former C-6 Facility
Los Angeles, California
24 May 2005

Name	E-mail Address	Phone Number
Stephanie Sibbett-Brutocao	Stephanie.M.Sibbett-brutocao@boeing.com	(310) 346-8322 cell (562) 733-2228 office
Dennis Carlson	Dennis.Carlson@boeing.com	(818) 535-7438 cell
Paul Sones	Psones@HaleyAldrich.com	(619) 285-7102 office (619) 871-9024 cell
Scott Zachary	SPZ@HaleyAldrich.com	(619) 285-7103 office (619) 993-1791 cell
Patrick Keddington	PAK@HaleyAldrich.com	(619) 285-7107 office (619) 9854286 cell

When leaving messages and sending e-mails, state the following information:

Date and Time: The date and time the incident occurred.
Location: Where the incident occurred.
Description: A brief description of the incident and what risks it poses to people, property, and the environment.

4. Prepare an incident report containing the following information:

Background and General Description: Briefly describe what the activities were being conducted, equipment (if any) was being used, and why.
Equipment Operation Description: Describe how the equipment operates under normal conditions.
Failure Analysis: Describe the root-cause of the incident. Describe the chain of events that led to the incident.
Corrective Actions Taken: Describe what corrective actions have been taken as of the date of the report.
Corrective Action in Process: Describe what additional measures are in process or are being contemplated to minimize the possibility of recurrence.
Figures: Include figures and drawings, as necessary, to convey information.
Appendices: Append relevant information as necessary (i.e., copies of alarm logs, data, etc.).

5. The incident report will be submitted Boeing for review. Remediation construction activities will not be resumed until approval has been granted by Boeing.

• G:\Projects\ENVIRONMENTAL\28882_C6ProjectMngmt\506 Phase IV AW Install\Field Docs\20050524_Incident Reporting Prodedures.doc

CALL TOLL FREE 800-227-2600
2 workings days before you dig

DIGALERT

Digalert No. A1451317

LOCATION REQUEST FORM

For faster service, prior to calling fill out all non-italicized fields

Date: 5/25/05 Time: 15:10 ***Operator:*** KELLY
Company Phone #: 619.280.9210 Caller: TRAVIS HAMMOND
Company Name: HALEY & ALDRICH
Address: 9040 FRIARS RD
City: SAN DIEGO State: CA Zip: 92108
Fax: 619.280.9415 E-mail:
Best hours to reach your company: 8-5
Foreman: TRAVIS HAMMOND Foreman's pager/cellular #: 619.987.1767

Delineated: [X] Yes [ ] No

County: LOS ANGELES City: LOS ANGELES
If more than 1 address or descriptive location:
MWB020 - 430' WEST OF SW CORNER OF 190TH & NORMANDIE, ~25' SOUTH OF 190TH
MWC XB007 - 500 TO 650' W OF NORMANDIE 700 TO 800' S OF 190TH (2 LOCATIONS)
MWC004, 22, 23 - 250 TO 400' W OF NORMANDIE, FROM KNOX ST TO 500' NORTH OF KNOX ST (3 LOCATIONS)
Address: 19503 Street: S. NORMANDIE AVE
Closest X/ST: 190TH STREET
Thomas Guide page & grid: P764 A-3
Boring: [X] Yes [ ] No
Type of work: MONITORING WELL INSTALLATION
Work to begin: Date: W 6/1/05 Time: 7:00

Instructions: [X] Mark By [ ] Meet & Mark [ ] Validate Permit Only [ ] Now

Work Being done for: BOEING

Permit # : _____ [ ] Not required [X] Not Available [ ] Blanket

Members being notified by USA: AIR PRODUCTS & CHEMICALS INC, CHEVRON, CITY OF LA LIGHTS, COUNTY SANITATION DIST, CAL H_2O / DOMINGUEZ, ICG TELECOM GROUP, LADWP, MCI, METRO WATER, SBC, SO CAL GAS, SHELL OIL PIPELINE, TERRADEX, UTI (EDISON) XO COMMUNICATIONS
Update on/or before date: 6/22

Underground Service Alert of Southern California

REV. 11-00

MONITORING FOR ENVIRONMENTAL CONDITIONS
650.641.0165
PETER BIFFAR
866.461.5100 X400

MCI
7000 Weston Parkway
Cary, North Carolina 27513

HALEY & ALDRICH ASSOCIATES
9040 FRIARS RD STE 220
SAN DIEGO, CA 92108

Attention: TRAVIS HAMMOND

MCI facilities are not in conflict with the scope of work identified. If there are changes to the scope of work identified in the field, please contact the local MCI field technician or MCI's National Fiber Security at 1-800-840-0338

State	Ticket#
CA	A1451317

For further questions call MCI at 1-800-840-0338

Fax Transmission Complete

To: HALEY & ALDRICH ASSOCIATES
Attn: TRAVIS HAMMOND
Voice: 619-280-9210
Fax: 619-280-9415

Re: Locating facilities in the area of your excavation

This is an important Safety Message from Shell Pipeline Company LP.

We are replying to your request to locate our underground facilities in an area where you are planning excavation work.

The following is the current status of our facility marking in the area specified in your notification.

Ticket number A1451317 is: Shell Pipeline is clear of the work area as described on the ticket.
County: LOS ANGELES
Place : LOS ANGELES
Street: 19503 S NORMANDIE AVE

If you have any questions about these responses to your excavation notification, please call the Shell Pipe Line office nearest your work site.

PROJECT SUMMARY

Spectrum Geophysics
2907 W. Empire Ave. , Burbank, CA 91504
Ph: 818-565-3590 Fax: 818-565-3595

Project Number 0506011N

Project Date Jun 1, 2005 **Meet Time** 0700

Project Manager: Nathan Ledesma **Other Staff:** John Iwansky

SITE INFORMATION

Walmart Parking Lot (Former Boeing C-6)

Carson, CA

Thomas Guide Coordinates LACO 763-J3

(For office use only) Located in LA ? No

MEET LOCATION/SPECIAL INSTRUCTIONS, ETC.

S of 190th between Normandie & Harbor Gateway

On-site Contact Travis Hammond

619-987-1767

Client's Cell # Client's Pager #

SCOPE OF WORK

Spectrum investigated 6 proposed ground instrusion sites for detectable subsurface interferences.

Map required? No

Report required? No

PERS	Utility survey	Parking lot
Survey Goal 1	Survey Goal 2	Facility Type

CLIENT INFORMATION

Haley & Aldrich
4002 West Mariposa Grande St.
Glendale, AZ 85310

Travis Hammond
Corporate Contact

623-328-5555
Clients office phone #

Work Performed:

- [x] Investigated 6 proposed ground intrusion sites for detectable subsurface interferences.
- [ ] Investigated _____ linear feet of proposed trench for detectable subsurface interferences.
- [ ] Delineated the surface trace of detectable utilities and subsurface interferences in _____ area(s)

approx. _____, _____, _____, _____ feet in size.

Other: Located utilities in 6 proposed work areas. Water lines (undetectable) and sewer undetectable

Vehicle I.D. 0

Day 1 / 1 Labor hours: 3

Equipment: GPR, Mscope

Other: Utilities

Report: (circle) Yes / (No) Diagram: Yes / (No)

Client/Rep Signature: [signature]

Client Project No.: 28882-506

Clients PO, WO or TO #

* Non-metallic and non-electrically conductive piping and materials are not detectable.
* We recommend that you call the ONE CALL CENTER prior to excavating or installing borings.
* We recommend that you hand auger to a depth of 10 feet below ground.
* Your potential boring locations were investigated for detectable subsurface interferences and their locations have been marked on the ground surface of a 12-inch diameter white circle or a stake or a nail or flagging.
* No consideration of liability will be given if borings are installed outside of the white circle or not centered on the flag, stake or nail. Call for a revisit if additional boring locations are required.

CALL TOLL FREE 800-227-2600
2 workings days before you dig

DIGALERT

Digalert No. A1531364

LOCATION REQUEST FORM

For faster service, prior to calling fill out all non-italicized fields

Date: 6/2/05 Time: 1420 ***Operator:*** Eva
Company Phone #: (619) 285-7102 Caller: Paul Sones
Company Name: Haley + Aldrich Inc.
Address: 9040 Friars Rd.
City: San Diego State: CA Zip: 92108-5860
Fax: (619) 280-9415 E-mail: PSones@HaleyAldrich.com
Best hours to reach your company: 8-4:30
Foreman: Travis Hammond Foreman's pager/cellular #: (619) 987-1767

Delineated: ☑ Yes ☐ No

County: Los Angeles City: Los Angeles (Torrance)
If more than 1 address or descriptive location:

Address: 1451 ½ Street: Knox Street
Closest X/ST: Harborgate Way
Thomas Guide page & grid: Pg. 763 J3 + 764 A3
Boring: ☑ Yes ☐ No
Type of work: Well installation
Work to begin: Date: 6/6/05 Time: 7:00

Instructions: ☑ Mark By ☐ Meet & Mark ☐ Validate Permit Only ☐ Now

Work Being done for: Boeing Realty Corporation

Permit # : _____ ☐ Not required ☑ Not Available ☐ Blanket

Members being notified by USA: Chevron, City of L.A., CA Water LADWP, MCI, Metro WD, SBC, SC Gas, Shell Oil, ATT, Paradex, UTI (edison) EXS

Update on/or before date: 6/30/05

Underground Service Alert of Southern California

REV. 11-00

To: HALEY AND ALDRICH
Attn: PAUL SONES
Voice: 619-285-7102
Fax: 619-285-7152

Re: Locating facilities in the area of your excavation

This is an important Safety Message from Shell Pipeline Company LP.

We are replying to your request to locate our underground facilities in an area where you are planning excavation work.

The following is the current status of our facility marking in the area specified in your notification.

Ticket number A1531364 is: Shell Pipeline is clear of the work area as described on the ticket.
County: LOS ANGELES
Place : TORRANCE
Street: 1451 KNOX ST

If you have any questions about these responses to your excavation notification, please call the Shell Pipe Line office nearest your work site.

ICU Message 002 EXP4 from chevron-Texaco PileLine 06-02-05 17:47

CHESP 00021A USAS 06/02/05 14:36:26 A1531364-00A INSUFFICIENT NOTICE GRID

Ticket : A1531364 Date: 06/02/05 Time: 14:30 Oper: EVA Chan: 100
Old Tkt: A1531364 Date: 06/02/05 Time: 14:35 Oper: EVA Revision: 00A
State: CA County: LOS ANGELES Place: TORRANCE
Locat: PREMARKED BY FRIDAY 6/3/2005 BY 2PM *** APRPOX 700FT E OF X/ST
: ALL LOC ON SITE
Address: 1451 KNOX ST
X/ST : HARBORGATE WAY
Grids: 0763J0324 0764A0313 Delineated: N

Work : BORING 83 BORINGS
Work date: 06/06/05 Time: 09:00 Hrs notc: 090 Work hrs: 043 Priority: 1
Instruct : MARK BY Permit : NOT AVAILABLE
Done for : BOEING REALITY CORP

Company: HALEY AND ALDRICH Caller: PAUL SONES
Address: 9040 FRIARS RD SUITE 220
City&St: SAN DIEGO, CA Zip: 92108 Fax: 619-285-7152
Phone: 619-285-7102
Formn: TRAVIS Phone: 619-987-1767
Mbrs : CHESP CITYLA CWSDOM01 LAWP3 MCISOCAL MWD03 PTT22

Date Sent 06-02 Crew NC Date Completed 06-02 Units Premarked
Time In Time Out Cleared By JSR Reference #
Response

COMMENTS

NO CONFLICT - CLEAR TO DIG

ATTACHMENT C

Daily Field Reports for Well Installation and Well Development

HALEY & ALDRICH

DAILY FIELD REPORT

Page 1 of

Project	PARCEL A MONITORING WELLS	Report No.	060105-JH
Location	C6	Date	W 6/1/05
Client	BOEING	Page	1 of
Contractor	WDC / SPECTRUM	File No.	28882-506
Weather	FOGGY & CALM	Temperature	65°

TU 7-8PM LOAD UP GEAR/PAPERWORK

430 - 630 TRAVEL

630 ONSITE - CHECK WELL LOCATIONS

MVL COLLECT 2 SLEEVES @ MWB020, MWC007 C - 100 - 115
↳ DRILL TO 115' B - 65 - 85
MWB020_SS100_0001

☑ BOB MX - HAND AUGER 10' - EXTRA CREW
- DELINEATORS

715 HEALTH & SAFETY MEETING

730 MEET W/ DENNIS, RUSS, SPECTRUM TO DISCUSS UTILITIES

740 WDC FILLING UP WATER, SPECTRUM CLEARING UTILITIES

830 WDC COOKIE CUTTING ASPHALT AT MWC007 & PREPARING TO HAND AUGER

☐ OFFICE - PICK UP SITEWIDE GW MONITOR

915 MEET W/ SCOTT Z. JOHN HELLER, JEREMY, TAIT, DENNIS
☑ SCOTT LATTIMORE - 1452 WASTE, BIN & BAKER TANK

1045 WDC CONTINUING TO HAND AUGER AT MWC007. AT ~5'

1330 - 14 LUNCH

1530 CLEANING UP & SECURING SITE. ADDED SOIL CUTTINGS TO ROLL-OFF BIN
☑ LABEL BIN C6 - SP089 - HA - SS ☐ ADD TO INVENTORY

BOARD FOR GEOLOGISTS 916.263.2113 916.263.0986 PAM
☐ EMAIL IF NOT RECEIVED BY WED PAM_HOPPER@DCA.CA.GOV

LAWNDALE HI EX 14814 HAWTHORNE BLVD

1630 OFFSITE

Field Representative(s)	Time on site	Report/Travel/Other	Total hours

Distribution:

Haley & Aldrich, Inc.

Form 4004

HALEY & ALDRICH

DAILY FIELD REPORT

Project	PARCEL A MW'S	Report No.	060205-TSH
Location	C6	Date	Th 6/2/05
Client	BOEING	Page	1 of
Contractor	WDC EXPLORATION	File No.	28882-506
Weather	FOGGY & MISTY	Temperature	60°

645 LOAD UP

700 HEALTH & SAFETY MEETING
PAUL CALL
☐ STL TO SHIP SAMPLES TO CANADA
☐ 2 RIGS ON SAT W/ RAMZI

800 COLLECT MWC007_SS082_00001 FOR CHEM OX TEST

9:15 CALL SCOTT LATTIMORE ☐ DRUMS FOR DECON WATER → 15
☐ PICKUP @ 1452 - DRUMS & ROLLOFF

1030 WDC HAVING DIFFICULTY RECOVERING C-SAND SAMPLE 124 INCHES OF SLURP IN SAMPLER
WDC WILL MOBILIZE CME CONTINUOUS CORE SYSTEM TO SITE & CONTINUE HAND AUGERING WHILE WAITING. NO STANDBY TO BE CHARGED

13 - 1330 LUNCH

1330 BOB NIX ARRIVED W/ EXTRA HEX ROD FOR CME CONTINUOUS CORE SYSTEM
BEGIN CORING @ 100'

1400 CALL STL. - THEY WILL SEND A COURIER @ 5PM
CALL PAUL - OK TO MOVE MWB007 ~ 20' SOUTH & TRY HAND AUGERING AGAIN

1545 CALL PAUL - TRIPPING OUT AUGERS & CORE BARREL
- GO BACK IN WITH 10-INCH AUGERS W/ WOOD PLUG & SET WELL
- COLLECT C-SAND SAMPLE AT MWB007

1630 SKIP ☐ PRINTER / WIRELESS

1635 REMOVED AUGERS & CORE BARREL. BOB NIX CALL - STEVE HUSTON TO BE ONSITE TOMORROW W/ CME 95
☐ ? COLLECT SAMPLE @ 110'?

1640 ~~MESSAGE~~ MIGUEL CLEANING UP & MOBILIZING OFFSITE

1800 WDC LOADING EQUIPMENT

1845 OFFSITE

Field Representative(s)	Time on site	Report/Travel/Other	Total hours

Distribution:

Haley & Aldrich, Inc.

Form 4004

- 847204
LB HYATT
PINE AVE
562.491.1234
$189.00 KING
$120.00 + TAX

HALEY & ALDRICH

DAILY FIELD REPORT

Page 1 of

Project	PARCEL A MW'S - PHASE 5	Report No.	06 0305 - TSH
Location	C6 19503 S. NORMANDIE AVE	Date	F 6/3/05
Client	BOEING	Page	1 of
Contractor	WDC	File No.	28882-506
Weather	PARTLY LOW CLOUDS	Temperature	60°

645 LOAD UP
700 ONSITE
730 WDC ONSITE - STEVE HUSTON CME-95
755 COOKIE CUTTER @ MWB007 & MWB020
☒ NEED TO BACKFILL MWB007 PREVIOUS HAND AUGER HOLE & PATCH CONCRETE
800 PAUL CALL
STL - HOLD SAMPLE TILL ALL IN HAND
SAT - RAMZI / T + 2 RIGS
MON - 4 RIGS RAMZI, T, PAUL, GLENN
830 WDC SETTING UP ON MWC007 -
850 BEGIN DRILLING MWC007 w/ 10" AUGERS
TAIT LAYING OUT LOT 8 AW LOCATIONS
9:00 LADWP MARKED ELECTRIC LINES IN PARKING LOT
☒ EQUIPCO - PID FOR C6 28882-506
- HB SAMPLING 27804-901
• 2100' H_2O LEVEL
• YSI H_2O LEVEL w/ CAL KIT & MANUAL
1330-M LUNCH
1400 STEVE GROUTING MWC007
1530 JORGE FINISHED HAND AUGERING MWB020 IN A TRIANGLE PATTERN TO 10' BGS. - CLEAR
JORGE MOVED TO MWB007 & CONTINUE HAND AUGERING
1615 STEVE FINISHED GROUTING MWC007. CLEANING UP EQUIPMENT
1630 JORGE FINISHED HAND AUGERING MWB007 IN A TRIANGLE PATTERN TO 10' BGS - CLEAR
1715 CLEANING UP, STL PICKED UP SAMPLE
1730 OFFSITE

Field Representative(s)	Time on site	Report/Travel/Other	Total hours

Distribution:

Haley & Aldrich, Inc.

Form 4004

HALEY & ALDRICH

DAILY FIELD REPORT

Page 1 of

Project	PARCEL A MWS	Report No.	060405 - RSH
Location	C6 19503 S. NORMANDIE AVE	Date	SA 6/4/05
Client	BOEING	Page	1 of
Contractor	WDC	File No.	28882 - 506
Weather	LOW CLOUDS & MILD BREEZE	Temperature	60°

645 LOAD UP

700 ONSITE C6 - HEALTH & SAFETY MEETING

CALIBRATE MINIRAE 2000 (SN - 4049) w/ 100 PPM ISOBUTYLENE

MESSAGES - F - PAUL - CANCEL MC-SAND SAMPLE

- GUMBY

PAUL ☐ 20-30' @ MWB007

13-1330 WDC @ LUNCH - WORK w/ RAMZI ON WELL CONSTRUCTION

1330 - WE SET MWB020 @ 117' TD. IT IS SUPPOSED TO BE A B-WELL 60-90. WE WILL PULL WELL & RE-SET @ 90', STEVE HAD THE SEAL IN ALREADY SO WE WILL CLEAN OUT THE AUGERS & OVERDRILL TO 95' OR SO. THIS TIME TO GET BACK TO THE SEAL MAY BE CHARGED AS STANDBY, STEVE HAD A BRIDGE IN THE CHIPS INSIDE THE AUGERS, SO HE MAY HAVE HAD A RE-DO ANYWAY.

1630 MWB020 CHIP SEAL SET ~ 3HRS RE-DO + EXTRA 20 BAGS SAND

☑ LABEL DECON DRUMS - CHECK WHICH # TO USE → 534

☐ COC

☐ ADJUST 5' ON BORING ~~LOGS~~

☑ EMAIL JEREMY

1700 OFFSITE - TRAVEL TO SD

☐ CLEAN PID BULB

1900 HOME

359 mi

Field Representative(s)	Time on site	Report/Travel/Other	Total hours

Distribution:

Haley & Aldrich, Inc.

Form 4004

HALEY & ALDRICH

DAILY FIELD REPORT

Page 1 of

Project	PARCEL C MW's / PHASE 4 AW's	Report No.	060605-TSH
Location	C6	Date	M 6/6/05
Client	BOEING	Page	1 of
Contractor	WDC	File No.	28882-506
Weather		Temperature	

415 - 630 LOAD UP, TRAVEL TXH 1767

630 ONSITE RE-PACK SAMPLES

☑ ADJUST LOG ~5'

☑ CLEAN PID BULB

☑ COPY INCIDENT, VIJA, DAJA, HOSPITAL MAP FOR RAMZI, RIGS

☐ UPDATE PHONE / INTERNET LISTS

800 HEALTH & SAFETY MEETING

WDC CREWS (1) STEVE HUSTON (2) NACHO (3) JORGE (4) MIGUEL

(1) FINISH GROUTING MWB020 & MOVE TO ANOTHER PARCEL A WELL MWC022

(2) CLEAN UP @ MWC & B00-> & SET WELL BOXES & DRILL MWC004

(3) HAND AUGER & DRILL MWC023

(4) HAND AUGER MWC004 & DRILL ~~AW~~ AW0131B

900 CALL STL & ARRANGE COURIER

930 CALL WDC - REQUEST 40 HR CERTS FOR HELPERS

TSH ADJUSTING MWB020 BORING LOG UP 5' ☐ CHANGE SAMPLE NAMES

☑ CORRECT NAMES IN NOTES

6/4/05 8:45 CHANGED MWB020_SS085_0001 TO MWB020_SS080_0001

6/4/05 9:15 CHANGE MWB020_SS105_0001 TO MWB020_SS100_0001

940 (1) FINISHED GROUTING MWB020, MOVING TO MWC023, RAMZI VERIFIED HAND AUGERING AT MWC023.

PROPOSED DRILL LOCATION AT MWC004 IS UNDER POWER LINES. ~~POSSIBLY~~ MOVE LOCATION ~5' SOUTH

1030 (1) CHANGING OUT MAIN LINE & WINCH LINE

1130 (1) BEGINNING TO DRILL MWC023. RAMZI LOGGING THE SOIL

JORGE HAND AUGERING AT MWC022. ONE OF THE TRIANGLE HOLES INTERCEPTED THE WATER LINE TRENCH BACKFILL MATERIAL AT ~4' BGS

1145 - 1215 LUNCH

NACHO SETTING UP TO DRILL MWC004. PAUL TO LOG THE SOIL

1230 JORGE FINISHED HAND AUGERING MWC022, ONE OF THE HOLES CONTINUES TO COLLAPSE AT ~6' BGS DUE TO SANDY TRENCH BACKFILL. 2 OTHER HOLES ARE IN CLAY. ONE HAS WATER IN IT AT THE BOTTOM. THE SANDY HOLE ALSO HAS WATER IN IT. WE WILL DRILL ON CLAYEY SIDE OF THE HAND-AUGER LOCATIONS.

(3) SETTING UP TO DRILL MWC022. TRANS TO LOG THE SOIL

1600 FINISHED SAMPLING MWC022, CLEANING UP & SHIP SAMPLE TO LAB

1700 OFFSITE UNLOAD 1730 DONE

Field Representative(s)	Time on site	Report/Travel/Other	Total hours

Distribution:

Haley & Aldrich, Inc.

Form 4004

HALEY & ALDRICH

DAILY FIELD REPORT

Page of

Project	Boeing C-6	Report No.	28882-506
Location	1451 Knox St., LA, CA	Date	6/6/2005
Client	The Boeing Company	Page	1 of
Contractor	WDC Exploration & Wells	File No.	28882-506
Weather	Sunny & hot	Temperature	

* Arrived on site @ 0647, Found two of H&A reps. already on site and WDC drill rigs and reps.
* Glenn from H&A + WDC team arrived on site @ 0705.
* Dennis from Boeing arrived on location @ 0712.
* @ 0830 → checked on the level of grout settling in MWB007 → dropped 5.1 ft, WDC (Nacho) filled in with 1 bag of bentonite chips and hydrated it.

* @ 0840 → overseeing the addition of grout in MWB020, all going smooth according to standart procedure.
  → 6 drums, 18 bags of Portland cement, 2 bags of Volclay grout.
  → filling complete @ 0935
  → removed equipment & mobilized to MWC023 location @ 1020

Field Representative(s)	Time on site	Report/Travel/Other	Total hours

Distribution:

Haley & Aldrich, Inc.

Form 4004

HALEY & ALDRICH

DAILY FIELD REPORT

Project	PARCEL A MW'S	Report No.	060705 - TSH
Location	C6	Date	TU 6/7/05
Client	BOEING	Page	1 of
Contractor	WDC	File No.	28882 - 506
Weather	PARTLY CLOUDY & BREEZY	Temperature	

700 ONSITE

HEALTH & SAFETY MEETING

				GEO
(1) RUBEN	95	–	REAM & SET MWC023	TRAVIS
(2) NACHO	75		REAM & SET MWC004	TRAVIS
(3) JORGE	75		REAM & SET MWC020	TRAVIS
(4) MIGUEL	75		AWO131B	GLENN
(5) PAUL	CME-85		AWO	GLENN

☑ WDC - 40 HR/8HR CERTS FAX

800 STURGEON & SONS DELIVERED BIN – SP090 – LEFT ON PARCEL A

RAMZI – INVENTORY, MINI-SCALE, COC (PINK COPY)

COLLEEN ☐ BORING LOGS FOR PARCEL A

☐ SAMPLE LOGS FOR GEOTECH SAMPLES

9:15 OFFICE DEPOT TO MAKE COPIES OF FIELD FORMS & GET PAGE PROTECTORS

1015 SCOTT LATTIMORE CALLED – 2 BINS (EMPTY) DELIVERY TOMORROW & PICK UP PARCEL A BINS, TRASH BIN DELIVERY ON THURSDAY

1100 CALLED BOB NIX & REQUEST 40-HR CERTS ☐ RECEIVED

1145 - 1215 LUNCH

1220 CALL BOB NIX ☑ LEAD DRILLER – POINT OF CONTACT FOR & CLEANUP PUNCH LIST ITEMS

☑ # FORKLIFTS ONSITE

LABEL DRUMS C6_IDW(534 - 536)_HA_WD MWB020

ROLLOFF C6_[redacted] SP090_HA PARCEL A WELLS ☑ INVENTORY

☑ MOVE DRUMS FROM MWB020 / REMOVE CAUTION TAPE / SET WELL VAULT

LABEL C6_IDW537_HA_WD MWC007 6/6/05 ☑ INVENTORY

12:55 LABEL C6_IDW538_HA_WD MWB007 6/4/05 ☑ INVENTORY

13:00 JORGE'S MAIN LINE BROKE WHILE PULLING AUGERS AFTER TREMIE GROUTING TO SURFACE

RUBEN WILL MOVE CME-95 TO JORGE'S WELL TO PULL THE AUGERS UP.

Field Representative(s)	Time on site	Report/Travel/Other	Total hours

Distribution:

Haley & Aldrich, Inc.

Form 4004

HALEY & ALDRICH

DAILY FIELD REPORT

Project	PARCEL A MW2	Report No.	06 0705-TSM
Location	C6	Date	TO 6/7/05
Client	BOEING	Page	2 of
Contractor	WDC	File No.	28882-500
Weather	CLEAR & BREEZY	Temperature	75-80°

CALL PAUL ☑ MAIN LINE ON JORGES RIG —
☑ NEW SCHEDULE GRID PRINT-OUT - SCOTT WILL BRING TOMORROW

1345 INSPECTED WOOD PLUGS - ALL IN GOOD SHAPE

PAUL CALL ☑ FAX INFO ON CABLE BREAK - EMAIL TONIGHT
☑ COMPLETION @ MW2004 → CONCRETE SKIRT ~3" ABOVE LANDSCAPE

SPOKE W/ JORGE GUTIERREZ
AT 13:00, HE FINISHED TREMIE GROUTING AFTER ALLOWING CM'S TO HYDRATE
AT LUNCH, HE HAD 35' OF ~~AT~~ 10" DIAMETER AUGERS THAT SET
FOR ~1 HOUR BEFORE TRYING TO PULL. AUGERS PULLED UP ~2" THEN
4" THEN THE MAIN LINE BROKE ~~AT~~ ON THE SPOOL. JORGE HAD
TO PULL THE LINE OFF THE SPOOL & DOWN FROM THE DERRICK
HE WILL REPAIR IT OFFSITE ON WEP. HE WILL BE AT ANOTHER
JOB TOMORROW. TO JORGE'S KNOWLEDGE, THE MAIN LINE WAS NOT
DAMAGED BEFORE IT BROKE. HE INSPECTED IT ON MONDAY MORNING
PAUL & JORGE COMPLETED A WDC NEAR-LOST REPORT ~~& SEN~~ WILL SEND
IT TO BOB TODAY

16:00 AXEL W/ ONYX CALLED - HE CAN'T SET NEW BIN TILL ~~THURSDAY~~ NOON ON WED.
THEY WILL BRING 2 ON THURSDAY & TAKE ~~PARCEL A~~ BINS

WDC CLEANING UP

1715 TSH LABELING DRUMS

1730 OFFSITE

1900 INCIDENT REPORT EMAIL, WASTE MANAGEMENT EMAILS

2000 DONE

Field Representative(s)	Time on site	Report/Travel/Other	Total hours

Distribution:

Haley & Aldrich, Inc.

Form 4004

STURGEON & SON, INC.
Transportation Services
(805) 322-4408

NON-HAZARDOUS WASTE DATA FORM

TO BE COMPLETED BY GENERATOR

NAME Boeing
ADDRESS 1451 Knox St
EPA I.D. NO. CAL000255063
CITY, STATE, ZIP Torrance CA
PHONE NO. (806) 515-5102
CONTAINERS: No. 2
VOLUME 20 y
WEIGHT
TYPE: ☐ TANK TRUCK ☐ DUMP TRUCK ☐ DRUMS ☐ CARTONS ☑ OTHER Roll off
WASTE DESCRIPTION Non HAZ Soil
GENERATING PROCESS Soil Cuttings from Well Decommissioning

COMPONENTS OF WASTE	PPM	%	COMPONENTS OF WASTE	PPM	%
1.			5.		
2.			6.		
3.			7.		
4.			8.		

PROPERTIES: pH ☐ SOLID ☐ LIQUID ☐ SLUDGE ☐ SLURRY ☑ OTHER ~~[illegible]~~ ~~[illegible]~~ d.H.
HANDLING INSTRUCTIONS: Profile # 891118

THE GENERATOR CERTIFIES THAT THE WASTE AS DESCRIBED IS 100% NON-HAZARDOUS.

[signature] 6/1/05
TYPED OR PRINTED FULL NAME & SIGNATURE DATE

TRANSPORTER

NAME Sturgeon & Son, Inc.
EPA I.D. NO.
ADDRESS 3511 Gilmore Ave
SERVICE ORDER NO. 95090
CITY, STATE, ZIP Bakersfield CA 93308
PICK UP DATE 6-9-05
PHONE NO. 800 328 6644 Bin # 25964-251080
TRUCK, UNIT, I.D. NO. 288
Aurelio Gonzalez [signature] 6-9-05
TYPED OR PRINTED FULL NAME & SIGNATURE DATE

TSD FACILITY

NAME Onix Environmental
EPA I.D. NO.
DISPOSAL METHOD
ADDRESS 1704 W. First St
☐ LANDFILL ☐ OTHER
CITY, STATE, ZIP Azusa CA 91702
PHONE NO. (626) 334-0117

TYPED OR PRINTED FULL NAME & SIGNATURE DATE

GEN	OLD/NEW	L A	TONS
TRANS		S B	
C/Q		RT/CD	HWDF NONE

DISCREPANCY

323-7-86

HALEY & ALDRICH

DAILY FIELD REPORT

Page 1 of 1

Project	PHASE 2 AW's	Report No.	061405-75H
Location	C6 1451 KNOX ST	Date	TU 6/14/05
Client	BOEING	Page	1 of
Contractor	WDC	File No.	28882-506
Weather	LOW CLOUDS	Temperature	65°

430 - 630 LOAD UP, TRAVEL
☑ ADD TO LOG - STW WORK @ 5PM MONDAY AFTER STORAGE

630 MEET W/ NEIL - SOIL HAULING CONTINUES TODAY - STAY OUT OF HAULROAD
DAVE (MILLIE) MAY MOVE THE ROAD WELL

715 HEALTH & SAFETY MEETING
(1) PAUL ALMANZA - CME 85 AW0055C
(2) TED NICHOLS - CME 85 AW0066UB

9100 STURGEON & SONS DELIVERED 2 EMPTY BINS
☑ CALL SCOTT - 2 FULL BINS ON SITE + 2 EMPTY BINS

1230 - 13 LUNCH

1315 ROBERT HUGHES STOPPED BY. HE WILL FAX THE APPROVED PERMIT TO PAUL

ILM WELLS BL-10C (3 WELL CLUSTER) HAFELE AMERICA 9641 HARBORGATE WAY
BL-11C (3 WC) ASPHALT ROADWAY ON W. SIDE OF MC1
BL05 1501 FRANCISCO ON SW CORNER OF BL05
50-75' INSIDE SECURITY FENCE (SECURITY WILL OPEN).

1600 DECON WATER LEVEL METER
16:10 BL-10C DTW: 69.25 (NORTH SIDE OF CASING) TD: >151'
1625 CLOSED VAULT, LOCKED WELL
1630 BL-11C DTW: 69.56 (N. SIDE OF CASING) TD: >151'
1640 LOCKED WELL, CLOSED VAULT, TOOK PHOTOS
HOME DEPOT - ~~BUNCH~~ DRUM WRENCH, 15/16 & 3/4 RATCHET
1745 OFFSITE - CHECK STORAGE SPACES
1830 LOAD SAMPLE JARS INTO STORAGE
~~1900~~ 1900 UNLOAD @ HOTEL & ~~FAX NOTES IN TO PAUL~~
1915 DONE

20:30 - FAX NOTES, UPDATE SCHEDULE

Field Representative(s)	Time on site	Report/Travel/Other	Total hours

Distribution:

Haley & Aldrich, Inc.

Form 4004

ALDRICH

DAILY FIELD REPORT

Page 1 of 1

Project	PHASE 4 AW'S	Report No.	061505 - TSH
Location	C6 1451 KNOX ST	Date	W 6/15/05
Client	BOEING	Page	1 of
Contractor	WDC	File No.	28882-506
Weather	LOW CLOUDS & CALM WIND	Temperature	65°

☑ BOB NIX - HAVE DRILL RIGS LEAVE DECON OFF SITE, WE HAVE ENOUGH

700 - ONSITE HEALTH & SAFETY MEETING

☑ PAUL S. - AW0055C - 10'S ? - YES

730 - STURGEON & SONS PICKING UP SP-92 & 91 - DROP 2 EMPTIES 95 & 96

93 & 94 ONSITE FROM YESTERDAY

STURGEON COULD NOT PICK UP SP091

PAUL CALL ☑ FAX RAMZI'S PARCEL A DEVEL NOTES

☑ BOB NIX - WHY 2 MAN CREWS, 3RD RIG,

- DEVELOPMENT OF S. WELLS MONDAY

☑ ZACHARY - SCHEDULE OF S. WELLS DEVEL.

940 CALL BOB NIX - ? ERNIE - BRINGING PAUL

- NIDAL

- ? TWO MAN CREWS - JORGE COMING W/CREW

1050 FAX PARCEL A DEVEL LOGS TO PAUL

☑ EQUIPCO - CLEAN/MAINTAIN PID

THEY WILL PICK UP OUR MINIRAE 2000 & RENT US A MINIRAE PLUS CLASSIC

1130-12 LUNCH

1300 ROBERT HUGHES VISITED SITE

☑ CORRECT DEVEL LOG FOR MWC004 - NOT MWC023

BOB NIX - ☑ COATED BENTONITE PELLETS HAVE FINE PELLETS IN THEM

- ? GO TO 3/8" PELLETS OR SCREEN THEM FIRST

☑ LEAVE DECONS OFFSITE - THEY HAVE TOOLS ON THEIR DECONS

1700 WRAPPING UP

1730 OFFSITE ~~SEND NOTES TO PAUL~~

Field Representative(s)	Time on site	Report/Travel/Other	Total hours

Distribution:

Haley & Aldrich, Inc.

HALEY & ALDRICH

DAILY FIELD REPORT

Page 1 of

Project	PHASE 4 AWS	Report No.	06 16 05 - TSH
Location	C6 1451 KNOX ST	Date	TU 6/16/05
Client	BOEING	Page	1 of
Contractor	WDC	File No.	28882-506
Weather	LOW CLOUDS & CALM	Temperature	67 - 70°

830 LOAD UP, OFFSITE — ? HAND AUGERS:

(1) PAUL - REDRILL 85C — 53UB, 53C, 52C, 42UB

(2) TED - FINISH GROUTING 94C — 31C, 27B, 16B

(3) MIGUEL - 65 UB — NORTHERN WELL

1000 BOB NIX CALLED - JORGE IS ON THE WAY

- MIKE ANDROS (CONTINENTAL WELL SUPPLY) WILL STOP BY

PAUL ☑ CONFIRM MONDAY W BOB NIX DEVEL

DAVE HARPER ☐ MSDS FOR DRILLING PRODUCT FAX 310-618-1709

☐ DISCUSS GROUT SPECS WITH PAUL - QA IN FIELD

☐ REVIEW CA WELL STDS NEXT WEEK

12-1230 LUNCH

13:20 LEFT COPIES OF MSDS W/ DAVE HARPER

PAUL SONG - HAND AUGERS - LOCATE FIRE LINES / STORM SEWERS OR HAND AUGER

☐ DISCUSS W/ SURVEYORS - STAKING EXISTING WELLS - MAY NOT LINE UP W/ LOW

1830 CLEANING UP

1845 OFFSITE. FAX NOTES TO PAUL, UPDATE SCHEDULE

Field Representative(s)	Time on site	Report/Travel/Other	Total hours

Distribution:

Haley & Aldrich, Inc.

Form 4004

TO: PAUL JONES

FAX: 619.280.9415
DATE: Th 6/16/05 8pm
PAGE: 1 OF 14

FROM: TRAVIS HAMMOND
CELL: 619.987.1767

TODAY INSTALLED: 85C, 63C, 94C, 65UB

GOT TO PELLET SEAL ON: 55C, 54C, 65C

INJECTION TESTED: 73C, 75UB, 74UB, 84C, 67UB
46B, 56UB, 76UB

FOR FRIDAY (4 RIGS) ① PAUL FINISH 55C, ? DRILL 44C
② TED FINISH 54C, ? DRILL 51C
③ MIGUEL FINISH 65C, ? DRILL 52C
④ ? 62C

FROM: TRAVIS HAMMOND
CELL: 619.987.1767

TO: PAUL JONES
FAX: 619.280.9415
SENT: 6/16/05 9:30 AM

PAGE: 1 OF 12

COMPLETED 6/15/05: INSTALL: 105 C, 96 UB
DEVELOP: 76UB, 46 B, 56 UB
INJECTION TEST: 129UB, 130B, 131B, 132B, 134 UB

TODAY TH 6/16/05
1. PAUL - REINSTALL 85C
2. TED - [redacted] 94C
3. MIGUEL - 65UB

INJECTION TEST REMAINING VAULT 3 WELLS

TOMORROW PLAN F 6/17/05 NO DEVELOPMENT / INJECTION
4 CREWS DRILLING: 65C, 63C, 62C, 55C

ISSUES: NONE

TO: COLLEEN CARRICK / RAMZI RAMZI

FAX : 619. 280.9415

6/20/05 13:00

FROM: TRAVIS HAMMOND

PHONE : 619. 987.1767

COMPLETED FRI 6/17/05 : AW0055C, 54C, 65C, 51C, 62C

TODAY : 5 DRILL RIGS

1. RUBEN 86C
2. JAVIER 32C
3. TED 43C
4. JORGE 53C
5. MIGUEL 44C,

ALDRICH

DAILY FIELD REPORT

Project	PHASE 4 AWS	Report No.	062005 - TJH
Location	C6 1451 KNOX ST.	Date	M 6/20/05
Client	BOEING	Page	1 of
Contractor	WDC	File No.	28882-506
Weather	CLEAR & CALM	Temperature	75°

630 - LOADUP

645 ONSITE

715 HEALTH & SAFETY MEETING

5 DRILL RIGS - (1) RUBEN 86C
(2) JAVIER 32C
(3) TED
(4) JORGE
(5) MIGUEL

TOMORROW'S HS SAFETY ☐ FORKLIFTS - POWERLINES
☐ RESPIRATOR FIT CHECKS

830 AW0086C ENCOUNTERED SOIL W/ ODOR, SHUT DOWN & DISCUSSED RESPIRATORS.
STURGEON & SONS DROPPED AN EMPTY BIN

9:00 WDC FORKLIFT BUMPED THE POWER LINES AT THE TRAILER
☑ RESPIRATOR FIT TESTS
☑ BACK UP SPOTTERS
☑ FORKLIFT SAFETY - OVERHEAD HAZARDS, HOPPER BROKE

910 SHUT DOWN & HELD HEALTH & SAFETY MEETING ABOUT UTILITIES & FORKLIFTS HEIDI

930 CALL SCOTT ZACHARY - CALL OUT TEMP POWER TO LOOK @ LINES. 714.223.5658
- DISCUSS W/ DENNIS

950 SPOKE W/ DAVE HARPER - HIS POWER IS ON. GOT TEMP POWER'S #
SPOKE W/ DENNIS - NO ACCESS TO MATERIAL AREA TILL MEET NEW INSPECTOR
BOB NIX.
☑ VERIFY 40 HR CERTS / RESPIRATOR FITTEST CARDS
☑ JAVIER DRILLING INSTEAD OF NACHO
☑ 5 YR. EXPERIENCE ☑ NITRILE GLOVES

1130 - 12 LUNCH

☐ ADD 546 BAKER TANK TO INVENTORY

14:00 MET WITH BOB NIX - HE WILL PROVIDE 40HR / RESPIRATOR CERTS TOMORROW
- THEY WILL SEND OUT NITRILE GLOVES

☐ INCIDENT REPORT EMAIL W/ PHOTOS & CORRECTIVE PROCEDURES (MEASURES)
☐ FLAT RAZOR KNIFE OR BLACK PAINT FOR OLD DRUM LABELS
☐ GREEN / RED FLAGGING TAPE FOR ROLLOFFS - ? HOT SPOT
SCOTT CALL - ☐ NOONE WHO IS NOT CERTIFIED IS TO OPERATE EQUIPMENT
TAILGATE TALK ☐ UTILITY AWARENESS OVERHEAD / BURIED
☐ HOPPER INSPECTION
GLENN VACATION JULY 8TH (FRIDAY) & 11TH (MONDAY)

Field Representative(s)	Time on site	Report/Travel/Other	Total hours

Distribution:

Haley & Aldrich, Inc.

ALDRICH

DAILY FIELD REPORT

Project	PH 4 AWS	Report No.	
Location	C6	Date	M 6/20/05
Client	Boeing	Page	of
Contractor	WDC	File No.	
Weather		Temperature	

16:15 TEMP POWER ONSITE. THEY REMOVED THE WIRES HANGING AT 11' & PULLED THE TRAILER WIRE UP HIGHER BY TIGHTENING IT. HE COULD NOT MOVE THE PHONE LINE HIGHER. HE SAID THAT WIRES ARE SUPPOSED TO BE AT LEAST 20' HIGH PER OSHA GUIDELINES. HE ALSO SAID THAT THE LINES WERE DEAD WHEN HE LEFT THEM AND THAT SOMEONE MUST HAVE TURNED THEM ON AT THE MAIN SINCE HE LEFT LAST.

16:45 SIGN DRILLER CARDS - DAILY SHEETS
RAMZI WRAPPING UP PEVEL/INSERT.

INSPECT AW0133 POTHOLE. NO SIGN OF WELL. ? GROUT COLUMN DOWN BENEATH THE CORRUGATED PIPE?

1730 OFFSITE
1930 HOME 120 mi
1945 UNLOAD
20 DONE 20 - 2030 SHOWER/LAUNDRY
2030 - 2230 EMAIL INCIDENT REPORT, PHOTOS, WASTE EMAIL
2230 - 20 TRANSFER TO JEEP, LEAVE NOTES @ OFFICE

Field Representative(s)	Time on site	Report/Travel/Other	Total hours

Distribution:

Haley & Aldrich, Inc.

HALEY & ALDRICH

CALCULATIONS

File No.	
Sheet	of
Date	
Computed By	
Checked By	

Client
Project
Subject

TO: COLLEEN CARRICK

FROM: TRAVIS HAMMOND

FAX: 619.280.9210

CELL: 619.987.1767

DATE: W 6/22/05

COMPLETED ON 6/21/05:

AW0009UB, 32C, 27B, 64UB, 55UB, 42C, 10UB, 23C

WORKING ON TODAY:
3 RIGS AM
4 RIGS PM

1. RUBEN 31C
2. JORGE — ARRIVE PM
3. TED 37C
4. MIGUEL 45B

~~NEET~~

ISSUES: SUBMITTED SAMPLE OF "HOT SPOT" CUTTINGS YESTERDAY
SAMPLE ID - CG_SP096_HA_SS
NO SAMPLE LOG REQUIRED FOR WASTE PROFILE SAMPLES

EMAIL TO UPLOAD!

WE LOCATED AW0133UB, ICS EXTENDED IT UP TO GRADE.
I INSPECTED IT AND IT IS ~1.5' MORE SHALLOW THAN WHEN INSTALLED
☐ ? INJECTION TEST OF PIPE IT AS IS?

CAL02AFH.FRP 20 November 1997

ALDRICH

DAILY FIELD REPORT

Page 1 of

Project	PHASE 4 AW'S	Report No.	D 62105 -TSH
Location	C6 1451 KNOX ST	Date	TU 6/21/05
Client	WDC	Page	1 of
Contractor	BOEING	File No.	28882-506
Weather	CLEAR & BREEZY	Temperature	75°

DENNIS

430-630 TRAVEL

700 HEALTH & SAFETY MEETING ☐ PIN FLAGS FOR UTIL ☐ FLAGGING FOR BINS

745 CALL DENNIS ☑ INSPECT MW 133 W/ JEREMY

☑ REPORT INCIDENTS TO BOEING ASAP

600 4 RIGS (1) RUBEN 86C GROUTING, 10UB

(2) NACHO 32C RE-SET WELL, 27B

(3) TED 42C

(4) JORGE MIGUEL 64UB

815 REVIEW WDC CERTIFICATIONS

DISCUSS W/ BOB NIX

☑ FAX CERTS FOR EMPLOYEES TO TRAILER ☐ FAX # @ TRAILER 310.618.1709

☑ HAND AUGER LOCATIONS - ASTHOLE RIG

☑ FANS / GENERATORS / EXT. CORDS

840 SCOTT LATTIMORE CALL - SAMPLE HOT SPOT MATERIAL > 8 PPM IN B2 - SPEED UP ANALYSIS

- PICKUP 4 ON WED, DROP 2

CALL BOB NIX ☑ WED 3 RIGS TO START, JORGE @ 10 AM FOR 4 RIGS

☑ DENNIS : TEM $165/HR RIG OR 30-/HOLE TO HAND AUGER

915 DAVE - FAX # 310.618.1709

- PLYWOOD @ 41C - TO BE MOVED BY TOMORROW

930 COORDINATE BIN ACCESS WITH ICS

MESSAGES : 845 - BOB NIX 856 SCOTT L - ONYX TO PICKUP 4 BINS TOMORROW & DROP 2 EMPTY

DAVE GAMBONE W 562.593.3789 C 310.890.8729 PG 562.877.2891

↳ CAN SEE MANIFESTS IF SCOTT NOT AVAIL.

947 - COLLEEN - PAPERWORK 1025 COLLEEN - FRIDAY - 5 WELL CONST ☐ ? FIELD NOTES

945 LOOKED @ MW0133 UB W/ JEREMY. IT APPEARS TO BE DIRECTLY UNDER THE STORM DRAIN.

☑ PASS ON TO SCOTT Z.

1215-1230 LUNCH

CALL DENNIS - HAND AUGER OR AIR KNIFE?

CALL STL - COURIER FOR SAMPLE

DENNIS ON-SITE ☐ SOAK SITE W/ WATER TRUCK AT NIGHT

Field Representative(s)	Time on site	Report/Travel/Other	Total hours

Distribution:

Haley & Aldrich, Inc.

HALEY & ALDRICH

DAILY FIELD REPORT

Page 2 of

Project
Location
Client
Contractor
Weather: CLEAR & BREEZY

Report No.
Date: TU 6/21/05
Page ___ of ___
File No.
Temperature: 75°

CALL SCOTT CATTIMORE - STURGEON WILL NEED A SHORT TRUCK TO SHUTTLE BINS
TSH REMOVING LABELS FROM OLD DECON WATER DRUMS
☐ CAUTION TAPE OFF THE DRIVE LANE

1400 WDC USING WATER TRUCK TO CONTROL DUST DUE TO WIND

1425 COLLECT C6_SP0096_HA_SS HOT SPOT SOIL CUTTINGS FOR DISPOSAL PROFILE
1710 STL PICKED UP SAMPLE
1700 INSPECT AW0133UB ELEV 47.04 TOC 12/16/04 INSTALLED 8/30/04
ELEV. 50.8 = ~51
SCREEN 89' TD ELEV OF BOTTOM = 89 - 51 = -38
AS IS → STAKE AW0133 ELEV 54.44 +38 = ~ 92.5 BGS
STICKUP = ~3.5'
DTW (TOC) 70.4 - 3.5 = ~67' BGS
TD (TOC) 94.4 - 3.5 = ~91 bgs
CONDITION OF BOTTOM: SOLID
MEASURING TAPE CAME OUT WITH PVC SHAVINGS & SOME SAND ON IT AT 23' MARK
~AT WATER TABLE. TIP WAS CLEAN

1800 TBD WRAPPING UP. COULD NOT LOCATE THE KEY FOR THE WATER TRUCK TO SOAK THE SITE

DARK BLUE DODGE 4x4 7G47051 LEFT ON SITE w/ 1 BLACK GUY
↳ LOADING CONCRETE FORMING LUMBER. HE WILL LOCK UP

1805 OFF SITE. PU PRINTER @ STORAGE

Field Representative(s)	Time on site	Report/Travel/Other	Total hours

Distribution:

Haley & Aldrich, Inc.

Form 4004

HALEY & ALDRICH

CALCULATIONS

File No.
Sheet of
Date
Computed By
Checked By

Client
Project
Subject

TO : COLLEEN CARRICK FROM : TRAVIS HAMMOND

FAX : 619.280.9415 CELL : 619.987.1767

DATE :

COMPLETED ON W 6/22/05 :

AW0031C, 37C, 43B, 45B, 53UB, 86B

WORKING ON Th 6/23/05 (4 RIGS)

1. RUBEN 32B, 87C
2. ? 54UB
3. MIGUEL 44B, 51UB
4. TED 52C

ISSUES :

AW0133UB – TO BE RE-DEVELOPED & INJECTION TESTED ON MONDAY 6/27

CAL02AFH.FRP 20 November 1997

ALDRICH

DAILY FIELD REPORT

Page 1 of

Project	PH 4 AW'S	Report No.	~~28882-506~~
Location	CC	Date	W 6/22/05
Client	BOEING	Page	1 of
Contractor	WDC	File No.	28882-506
Weather	CLEAR & CALM	Temperature	75°

645 LOADUP

700 HEALTH & SAFETY MEETING

STURGEON & SONS DROPPING 2 EMPTY BINS & WILL ATTEMPT TO PICKUP 1 OR 2 FULL BINS

HOME DEPOT ☐ RED/GREEN/YELLOW FLAGGING

☐ PIN FLAGS FOR UTIL

CALL BOB MIX ☑ WATER TRUCK - JUST FOR INSPECTION — ☐ DISCUSS W/ DENNIS

☑ EXTRA HELPERS - FERNANDO'S HAND, TED'S KNEE, HAND AUGER GUY

☑ DEWEL / INSERT STARTING MONDAY — 2 RIGS

1130-12 LUNCH

DAVE ☐ LAST OF CEMENT FORM BOARDS

☐ TRASH BIN

1545 DENNIS CALL - ☐ BRING DRUMS FROM MWC009 BACK TO LOT B

1800 WRAPPING UP

1815 OFFSITE. UNLOAD & SETUP FAX

1830 DONE. DINNER

Field Representative(s)	Time on site	Report/Travel/Other	Total hours

Distribution:

Haley & Aldrich, Inc.

HALEY & ALDRICH

CALCULATIONS

File No.
Sheet ___ of ___
Date
Computed By
Checked By

Client
Project
Subject

TO: COLLEEN CARRICK
FAX: 619.280.9415
DATE/TIME: 6/23/05 7:30 PM

FROM: TRAVIS HAMMOND
CELL: 619.987.1767
PAGE 1 OF 9

COMPLETED Th 6/23/05: AW00328, 44B, 51UB, 52C, 54UB, 87C

H&A PERSONNEL ONSITE Th 6/23/05: GLENN & TRAVIS – DRILLING OVERSIGHT

FOR FRIDAY 6/24/05 (4 RIGS)

1. RUBEN 29 UB, 26C
2. ? 42 UB, CLEAN-UP CREW
3. TED 41C, 41UB
4. MIGUEL 30B, 23B

H&A PERSONNEL ONSITE F 6/24/05

GLENN & TRAVIS – DRILLING OVERSIGHT
PATRICK – VAULT 3 PIPING PRESSURE TEST

CAL02AFH.FRP 20 November 1987

HALEY & ALDRICH

CALCULATIONS

File No.
Sheet of
Date
Computed By
Checked By

Client
Project
Subject SCHEDULE

○ = HAND AUGER

6/13	~~86C~~	~~27B~~	~~90B~~	~~100B~~
6/14	~~27C~~	~~30C~~	RUBIN ~~86B~~	~~32B~~
6/15	~~45B~~	TED ~~43B~~	MIG ~~30B~~	~~32C~~
6/16	~~56UB~~	~~43C~~	~~44C~~	MIG ~~44B~~
6/17	~~66UB~~	~~55C~~	~~55UB~~	TED ~~41C~~
6/20	~~67UB~~	~~46B~~	41UB	RUBIN ~~29UB~~
6/21	~~62C~~	~~63C~~	~~65C~~	~~51C~~
6/22	TED ~~52C~~	~~53UB~~	MIG ~~54UB~~	42UB
6/23	~~63UB~~	~~64UB~~	~~65UB~~	TED ~~51UB~~
6/24	~~53C~~	~~54C~~	~~42C~~	
6/27	87B	15B	6B	8B
6/28	RUBIN ~~87C~~	26B	18B	7B
6/29	26C	18C	11B	13B
6/30	21C	166 LB	12B	13C
7/1	28B	34C	20UB	23C
7/5	34B	23 B	25 C	21 B
7/6	25B	16B	14B	
7/7	19C	167LB	14C	

CAL02AFH.FRP 20 November 1997

HALEY & ALDRICH

DAILY FIELD REPORT

Page 1 of

Project	PH4 AW's	Report No.	062305-TSH
Location	C6	Date	TH 6/23/05
Client	BOEING	Page	1 of
Contractor	WDC	File No.	28882-506
Weather	LOW CLOUDS & BREEZY	Temperature	65°

645 LOADUP
7:00 HEALTH & SAFETY MEETING

TAIT RE-STAKED TMW-08 FOR ICS

1145 - 1215 LUNCH

BOB NIX ☑ RICHARD CERTS - WALLET CARD
☑ SCHED DEVEL / INT AW0133UB
☑ ? # RIGS - 4 ON FRIDAY, ? NEXT WEEK - 2 DEVEL ON M, TU 1 ON W, TH, F.
☑ DEON - PUT IN TOUCH
SPEAK W/ BOB ☑ WATER TRUCK

1800 WRAPPING UP
1815 OFFSITE

1815 - 1915 DINNER

1915 - 19

Field Representative(s)	Time on site	Report/Travel/Other	Total hours

Distribution:

Haley & Aldrich, Inc.

Form 4004

HALEY & ALDRICH

CALCULATIONS

Client		File No.	
Project		Sheet	of
Subject		Date	
		Computed By	
		Checked By	

TO: COLLEEN CARRICK
FAX: 619.280.9415
DATE:
PAGE 1 OF 6

FROM: TRAVIS HAMMOND
CELL: 619.[redacted] 987.1767

WELLS INSTALLED OF F 6/24/05:

AW0006B, 29UB, 30B, 41C, 42UB

H & A PERSONNEL ON SITE:
TRAVIS & GLENN – DRILLING OVERSIGHT
PATRICK – PRESSURE TEST VAULT 3 WELL PIPING

FOR MONDAY 6/27/05 – 3 RIGS + 2 DEVELOPMENT RIGS

1. PAUL CME-85 26C, 18C
2. TED CME-85 7B, 8B
3. RUBEN CME-95 20UB, 16B

H & A PERSONNEL TO BE ONSITE
TRAVIS & GLENN DRILLING OVERSIGHT
PATRICK – PIPING OVERSIGHT
RAMZI – DEVELOPMENT & INJECTION TEST

CAL02AFH.FRP 20 November 1997

ONYX

ENVIRONMENTAL SERVICES

Please type or print in block letters. (Form designed for use on elite (12-pitch) typewriter.)

NON-HAZARDOUS WASTE MANIFEST

1. Generator's US EPA ID No.: CAL000255063 — Manifest Document No.:
2. Page 1 of 1

3. Generator's Name and Mailing Address
BOEING REALTY CORPORATION
1451 KNOX ST
TORRANCE, CA 90501

4. Generator's Phone (562) 593-3709

A. Non-hazardous Manifest Document Number: Z156452

B. State Generator's ID:

5. Transporter 1 Company Name: STURGEON AND SON, INC.
6. US EPA ID Number: CAD004778742

C. State Trans. ID:

7. Transporter 2 Company Name:
8. US EPA ID Number:

D. Transporter's Phone (661) 322-4408

E. State Trans. ID:

9. Designated Facility Name and Site Address
ONYX ENVIRONMENTAL SERVICES, L.L.C.
1704 W. FIRST STREET
AZUSA, CA 91702

10. US EPA ID Number: CAD008302903

F. Transporter's Phone ( )

G. State Facility's ID:

H. Facility's Phone (626) 334-5117

	11. US DOT Description (Including Proper Shipping Name, Hazard Class, and ID Number) HM	12. Containers No.	Type	13. Total Quantity	14. Unit Wt/Vol	L Waste No.
a.	NON-HAZARDOUS SOLID, n.o.s., (SOIL), NONE, NONE	001	CM	00020	Y	NONE
b.						
c.						
d.						

J. Additional Descriptions for Materials Listed Above
S/ 891118 20 YARD BIN
a. c.
b. d.

K. Handling Codes for Wastes Listed Above
a. c.
b. d.

15. Special Handling Instructions and Additional Information
EMERGENCY NUMBER-INFOTRAC: 1-800-535-5053
ONYX PROFILE # 891118
Bin# 25611 C6-SP093-HA

16. **GENERATOR'S CERTIFICATION:** I hereby declare that the contents of this consignment are fully and accurately described above by the proper shipping name, and are classified, packaged, marked and labelled/placarded, and are in all respects in proper condition for transport according to applicable international and national governmental regulations.

I hereby certify that the above-named material is not hazardous waste as defined by 40 CFR Part 261 or any applicable state law.

Printed/Typed Name: Scott Lattimore — Signature: Scott Lattimore — Month Day Year: 06 24 05

17. Transporter 1 Acknowledgement of Receipt of Materials
Printed/Typed Name: Aurelio Gonzalez — Signature: [signature] — Month Day Year: 06 24 05

18. Transporter 2 Acknowledgement of Receipt of Materials
Printed/Typed Name: — Signature: — Month Day Year:

19. Discrepancy Indication Space

20. Facility Owner or Operator: Certification of receipt of non-hazardous materials covered by this manifest except as noted in Item 19.
Printed/Typed Name: — Signature: — Month Day Year:

GENERATOR — TRANSPORTER — FACILITY

1-GENERATOR COPY

SIGNATURE AND INFORMATION *MUST* BE LEGIBLE ON ALL COPIES

ONYX

ENVIRONMENTAL SERVICES

Please type or print in block letters. (Form designed for use on elite (12-pitch) typewriter.)

NON-HAZARDOUS WASTE MANIFEST

1. Generator's US EPA ID No.: CAL000255063 — Manifest Document No.:
2. Page 1 of 1

3. Generator's Name and Mailing Address: BOEING REALTY CORPORATION, 1451 KNOX ST, TORRANCE, CA 90501
4. Generator's Phone (562) 593-3709

A. Non-hazardous Manifest Document Number: Z156456

B. State Generator's ID:

5. Transporter 1 Company Name: STURGEON AND SON, INC
6. US EPA ID Number: CAD004778742

C. State Trans. ID:

7. Transporter 2 Company Name:
8. US EPA ID Number:

D. Transporter's Phone (661) 322-4408

E. State Trans. ID:

9. Designated Facility Name and Site Address: ONYX ENVIRONMENTAL SERVICES LLC, 1704 W. FIRST STREET, AZUSA, CA 91702
10. US EPA ID Number: CAD098302903

F. Transporter's Phone ( )

G. State Facility's ID:

H. Facility's Phone (626) 334-5117

GENERATOR

11. US DOT Description (Including Proper Shipping Name, Hazard Class, and ID Number) HM		12. Containers No.	Type	13. Total Quantity	14. Unit Wt/Vol	L Waste No.
a.	NON-HAZARDOUS SOLID, n.o.s. (SOIL), NONE, NONE	001	CM	00020	Y	NONE
b.						
c.						
d.						

J. Additional Descriptions for Materials Listed Above

a. SA 891118 20 YARD BIN
b.
c.
d.

K. Handling Codes for Wastes Listed Above

a.
b.
c.
d.

15. Special Handling Instructions and Additional Information
EMERGENCY NUMBER-INFOTRAC 1-800-535-5053

ONYX PROFILE #891118 Bin# 25848 C6-51098-HA

16. **GENERATOR'S CERTIFICATION:** I hereby declare that the contents of this consignment are fully and accurately described above by the proper shipping name, and are classified, packaged, marked and labelled/placarded, and are in all respects in proper condition for transport according to applicable international and national governmental regulations.

I hereby certify that the above-named material is not hazardous waste as defined by 40 CFR Part 261 or any applicable state law.

Printed/Typed Name: SCOTT LATTIMORE — Signature: Scott Lattimore — Month Day Year: 06 24 05

TRANSPORTER

17. Transporter 1 Acknowledgement of Receipt of Materials

Printed/Typed Name: Aurelio Gonzalez — Signature: Aurelio Gonzalez — Month Day Year: 06 24 05

18. Transporter 2 Acknowledgement of Receipt of Materials

Printed/Typed Name: — Signature: — Month Day Year:

FACILITY

19. Discrepancy Indication Space

20. Facility Owner or Operator: Certification of receipt of non-hazardous materials covered by this manifest except as noted in Item 19.

Printed/Typed Name: — Signature: — Month Day Year:

1-GENERATOR COPY

SIGNATURE AND INFORMATION *MUST* BE LEGIBLE ON ALL COPIES

TO: COLLEEN CARRICK
FAX: 619.280.9415
PAGE: 1 OF 17
DATE: M 6/27/05 9:45 PM

FROM: TRAVIS HAMMOND
CELL: 619.987.1767

H & A PERSONNEL ONSITE M 6/27/05

TRAVIS & GLENN - DRILLING OVERSIGHT
RAMZI - WELL DEVELOPMENT & INJECTION TESTING
PATRICK - PIPING INSTALLATION OVERSIGHT

COMPLETED M 6/27/05

RE-DEVELOPED & INJECTION TESTED AW0133UB → PASSED
↳ TO BE PIPED INTO VAULT 1 MONDAY PM.

DEVELOPED: AW0051UB, 51C, 54UB, 54C, 55C, 62C, 63UB, 63C
INSTALLED: AW0012B, 20UB, 21C, 26C, 41UB, 87B

FOR TUESDAY:

TRAVIS & [redacted] GLENN - DRILLING OVERSIGHT
RAMZI - DEVELOP WELLS W/ 2 RIGS
[redacted] 3 DRILL RIGS - PAUL CME-85 34C, 34B
RUBEN CME-95 7B, 8B, 13C
TED CME-85 25C, 18C

TO: COLLEEN CARRICK
FAX: 619.280.9415
PAGE: 1 OF 24

FROM: TRAVIS HAMMOND
CELL: 619.787.1767
DATE: W 6/29/05 6:15 AM

H&A PERSONNEL ONSITE TU 6/28/05

TRAVIS & GLENN – DRILLING OVERSIGHT
RAMZI – DEVELOPMENT / INJECTION TEST

COMPLETED ON TU 6/28/05 (3 DRILL RIGS / 2 DEVELOPMENT RIGS)

INSTALLED: AW0007B, 8B, 18C, 25C, 34C

DEVELOPED: 9UB, 10UB, 27B, 31C, 32B, 37C, 53UB, 53C, 55UB, 86B, 86C

INJECTION TESTED: 9UB, 10UB, 27B, 31C, 37C, 86B, 86C

PLAN FOR WED 6/29/05

H&A PERSONNEL: SAME AS ABOVE

5 DRILL RIGS / 2 DEVELOPMENT RIGS

INSTALL: 34B, 28B, 26B, 167LB, 23B, 13C, 16B, 14C, 166LB,

DEVEL/INJECT ALONG SVE TRENCH LINE

TO: COLLEEN CARRICK
FAX: 619.280.9415
PAGE: 1 OF 23
DATE:

FROM: TRAVIS HAMMOND
CELL: 619.987.1767

COMPLETED W 6/29/05

INSTALLATION: AW0014C, 16B, 26B, 28B, 34B, 166LB, 25B

DEVELOPMENT: AW 0030B, 32C, 43B, 43C, 44B, 44C, 45B, 65C

ADDITIONAL DEVELOPMENT: (PREVIOUSLY DEVELOPED) 86B

~~INSTALLATION~~:

INJECTION TEST: AW 0030B, 32B, 32C, 43B, 45B, 55UB

H&A PERSONNEL ONSITE W 6/29/05

TRAVIS BLEWN - DRILLING OVERSIGHT (5 RIGS)

RAMZI - DEVELOPMENT / INJECTION TESTING (2 RIGS)

FOR TH 6/30

3 RIGS - INSTALL 167LB, 18B, 13C, 21B, 15B, 23B

1 DEVELOPMENT RIG

ATTACHMENT D

Well Construction and Destruction Records

HALEY & ALDRICH

TEST BORING REPORT

BORING NO. MWC007

PROJECT	PARCEL A MW's	H&A FILE NO.	28882-506
LOCATION	C6	PROJECT MGR.	SCOTT ZACHARY
CLIENT	BOEING	FIELD REP.	TRAVIS HAMMOND
CONTRACTOR	WDC EXPLORATION & WELLS	DATE STARTED	06/1/05 8:00
DRILLER	~~ANGEL ALVARADO~~ STEVE HUSTON	DATE FINISHED	06/3/05 17:00

Elevation	ft.	Datum		Boring Location									
Item	Casing	Sampler	Core Barrel	Rig Make & Model	CME-75			Hammer Type		Drilling Mud		Casing Advance	
Type	HSA	"Slow"	NQ	☒ Truck	☐ Tripod	☐ Cat-Head		☒ Safety		☐ Bentonite		Type Method Depth	
Inside Diameter (in.)	6.25	1.5	↓	☐ ATV	☐ Geoprobe	☒ Winch		☐ Doughnut		☐ Polymer		HSA	
Hammer Weight (lb.)	OD = 10"	140		☐ Track	☐ Air Track	☐ Roller Bit		☐ Automatic		☒ None			
Hammer Fall (in.)		30"		☐ Skid		☒ Cutting Head		Drilling Notes:					

Depth (ft.)	Sampler Blows per 6 in.	Sample No. & Recovery (in.)	Sample Depth (ft.) / Recovery	Well Diagram	Stratum Change (ft.)	USCS Symbol	Visual-Manual Identification & Description (density/consistency, color, GROUP NAME & SYMBOL, maximum particle size*, structure, odor, moisture, optional descriptions, geologic interpretation)	Gravel % Coarse	Gravel % Fine	Sand % Coarse	Sand % Medium	Sand % Fine	% Fines	Field Test Dilatancy	Toughness	Plasticity	Strength
0		HAND AUGER TO 10'															
		TRIANGLE PATTERN					PORTLAND CEMENT + 5% BENTONITE GROUT MIXTURE 10 DRUMS X 50 GAL = 500 GAL = 67 FT³										
10	10 12	SS-1 14:05	14-15.5 / 17"			SM	DENSE, LT BROWN SILTY VF-F SAND, NO STRUCTURE, NO ODOR, MOIST										
20		SS-2 14:10	19-20.5 / 18"			ML	STIFF, LT BROWN, VF SANDY SILT, LAYERED, NO ODOR, MOIST										
25	14 15 20	SS-3 14:30	24-25.5 / 18"			CL	STIFF, LT BROWN, SILTY CLAY, LAYERED, NO ODOR, LOW MOIST VERY										
30		SS-4 14:35	29-30.5 / 17"			SM	MED DENSE LT BROWN TO BROWN, SILTY VF-F SAND, NO STRUCTURE, NO ODOR, MOIST										
35		SS-5 14:40	34-35.5 / 6"			SP	MED DENSE LT BROWN TO TAN, POORLY GRADED VF-F SAND NO STRUCTURE, NO ODOR, MOIST										
40	19 20 25	SS-6 14:45	39-40.5 / 17"			SP	SAME AS ABOVE, BROWN, LAYERED										
	22 24 46	SS-7 14:50	44-45.5 / 18"			SP	SAME AS ABOVE, TAN W/ RUST STAINING, LAYERED										
50	23 26 61	SS-8 14:55	49-50.5 / 18"			SP	SAME AS ABOVE, LT BROWN W/ RUST STAINING, WEATHERED SHELL FRAGMENTS 50 - 50.5'										
55	25 24 27	SS-9 15:00	54-55.5 / 18"			SP	SAME AS ABOVE, NO SHELL FRAGMENTS										
60	23 27 28	SS-10 15:10	59-60.5			SP	SAME AS ABOVE										

Water Level Data					
Date	Time	Elapsed Time (hr.)	Depth in feet to: Bottom of Casing	Bottom of Hole	Water

Sample ID		Well Diagram	
O	Open End Rod		Riser Pipe
T	Thin Wall Tube		Screen
U	Undisturbed Sample		Filter Sand
S	Split Spoon Sample		Cuttings
G	Geoprobe		Grout
			Concrete
			Bentonite Seal

Summary	
Overburden (Linear ft.)	
Rock Cored (Linear ft.)	
Number of Samples	
BORING NO.	MWC007

Field Tests Dilatancy: R - Rapid S - Slow N - None Plasticity: N - Nonplastic L - Low M - Medium H - High
Toughness: L - Low M - Medium H - High Dry Strength: N - None L - Low M - Medium H - High V - Very High

*NOTE: Maximum Particle Size is determined by direct observation within the limitations of sampler size.

NOTE: Soil identifications based on visual-manual methods of the USCS system as practiced by Haley & Aldrich, Inc.

J:\forms\Visual\9700.xls

HALEY & ALDRICH

TEST BORING REPORT

BORING NO. MWC007

Depth (ft.)	Sampler Blows per 6 in.	Sample No. & Recovery (in.)	Sample Depth (ft.)	Well Diagram	Stratum Change (ft.)	USCS Symbol*	Visual-Manual Identification & Description (density/consistency, color, GROUP NAME & SYMBOL, maximum particle size*, structure, odor, moisture, optional descriptions, geologic interpretation)	Gravel % Coarse	Gravel % Fine	Sand % Coarse	Sand % Medium	Sand % Fine	% Fines	Field Test Dilatancy	Field Test Toughness	Field Test Plasticity	Field Test Strength
60		SS-10					SEE ABOVE										
65	25 27 29	SS-11 15:15	64-65.5 18"		▽	SP	SAME AS ABOVE, WET										
70		SS-12 15:20	69-70.5 18"			SP	SAME AS ABOVE										
		SS-13 6/2/05 7:30	74-75.5 12"			SP	MEDIUM DENSE, LT BROWN TO OLIVE-BROWN, POORLY GRADED F SAND, LAYERED, NO ODOR, WET										
80	14 17 19	SS-14 7:45	79-80.5 18"			SP	SAME AS ABOVE										
	2.5" SPLIT SPOON LAB SAMPLE	SS-15 8:00	82-83.5 18"			SP	COLLECT MWC007-SS082-0001 SAME AS ABOVE										
					PORTLAND CEMENT +5% BENTONITE GROUT												
					88												
90		SS-16 8:30	89-90.5 18"			SP	SAME AS ABOVE										
					1/4" TR-30		COATED BENTONITE TABLETS - 2 BUCKETS										
					93.5												
	29 50/6	SS-17 8:55	94-95.5 17"			SP	SAME AS ABOVE										
					97												
100		SS-18 9:20	99-100.5 14"			SP	DENSE, LT BROWN, POORLY GRADED F-M SAND WITH PARTIALLY CEMENTED NODULES A-O SHELL FRAGMENTS UP TO 1/2" DIAMETER, NO STRUCTURE, NO ODOR, WET										
		SS-19 9:45	104-105.5 7"			SP	SAME AS ABOVE										
					105 BAGS		#2/16 MONTEREY SAND (93.5 - 117.5')										
110					4-INCH DIAMETER SCH-40 PVC 0.020-INCH SLOTTED WELL SCREEN (97-117')												
					4" DIAMETER END CAP (117' - 117.5')												
					117.5		COLLAPSED NATIVE MATERIAL										
120							BOTTOM OF BORE HOLE @ 119'										

NOTES:

FILE NO. 28887-506

BORING NO. MWC007

*NOTE: Maximum Particle Size is determined by direct observation within the limitations of sampler size.

NOTE: Soil identifications based on visual-manual methods of the USCS system as practiced by Haley & Aldrich, Inc.

J:\forms\Vinal\3701.xls

HALEY & ALDRICH

TEST BORING REPORT

BORING NO. MWB007

PROJECT	Boeing C-6	H&A FILE NO.	28882-506
LOCATION	19503 Knox	PROJECT MGR.	Scott Zachary
CLIENT	Boeing	FIELD REP.	R. Ramzi
CONTRACTOR	WDC Exploration Wells	DATE STARTED	Sat 6/4/05 0800
DRILLER	Ignacio Gutierrez	DATE FINISHED	Mon 6/6/05 1200

Elevation ft. Datum

Boring Location

Rig Make & Model: CME-75

Item	Casing	Sampler	Core Barrel
Type	HSA	NA	NA
Inside Diameter (in.)	6.25"	↓	↓
Hammer Weight (lb.)	OD=10"	↓	
Hammer Fall (in.)			

☒ Truck ☐ ATV ☐ Track ☐ Skid ☐ Tripod ☐ Geoprobe ☐ Air Track ☐ Cat-Head ☒ Winch ☐ Roller Bit ☒ Cutting Head

Hammer Type: ☒ Safety ☐ Doughnut ☐ Automatic

Drilling Mud: ☐ Bentonite ☐ Polymer ☒ None

Casing Advance: Type Method Depth: HSA

Drilling Notes:

Depth (ft.)	Sampler Blows per 6 in.	Sample No. & Recovery (in.)	Sample Depth (ft.)	Well Diagram	Stratum Change (ft.)	USCS Symbol	Visual-Manual Identification & Description (density/consistency, color, GROUP NAME & SYMBOL, maximum particle size*, structure, odor, moisture, optional descriptions, geologic interpretation)	Gravel % Coarse	Gravel % Fine	Sand % Coarse	Sand % Medium	Sand % Fine	Sand % Fines	Field Test Dilatancy	Field Test Toughness	Field Test Plasticity	Field Test Strength
0	Hand Auger to 10' Triangle Pattern ↓																
10		SS-1 18"	9-10.5			CL	very stiff, light brown, Clay, no structure, no odor, dry.										
		SS-2 17"	14-15.5			SP	med. dense, light brown to tan fine grained sand, no structure, no odor, dry.										
20		SS-3 17"	19-20.5			SP	Same as above with minor rust.										
		SS-4 15"				CL	V. stiff, gray-brown to olive-brown, clay, no structure, no odor, dry.										
30		SS-5 16"	29-30.5		-30.5	ML / CL	Dense, light brown silt, no structure no odor, dry, cobble 8" diam. @ 30' → slightly moist										
		SS-6 15"	34-35.5		-34.5	SP / SM	V. stiff, gray brn to olive brn clay, no structure, no odor, slightly moist.										
40		SS-7 18"	39-40.5				→ loose, tan fine-grained sand to silty sand, no structure, no odor, slightly moist										
		SS-8 17"	44-45.5		-45.5	CL	→ stiff, lt. brn to olive brn Clay with traces of fine sand, rusty spots, no structure, no odor, dry. slightly moist										
50		SS-9 18"	49-50.5		-51	SP-SM	→ med. dense, tan fine sand to silty sand, no structure, no odor, dry.										
						CL	stiff, lt. brn to olive brn Clay, no structure, no odor, slightly moist.										
						ML	→ Dense, lt. brn to olive brn silt, no structure, no odor, slightly moist.										
						CL	as above, with a lot of rust stains										

Water Level Data

Date	Time	Elapsed Time (hr.)	Depth in feet to: Bottom of Casing	Bottom of Hole	Water

Sample ID: O Open End Rod; T Thin Wall Tube; U Undisturbed Sample; S Split Spoon Sample; G Geoprobe

Well Diagram: Riser Pipe; Screen; Filter Sand; Cuttings; Grout; Concrete; Bentonite Seal

Summary

Overburden (Linear ft.)
Rock Cored (Linear ft.)
Number of Samples

BORING NO. MWB007

Field Tests Dilatancy: R - Rapid S - Slow N - None; Toughness: L - Low M - Medium H - High; Plasticity: N - Nonplastic L - Low M - Medium H - High; Dry Strength: N - None L - Low M - Medium H - High V - Very High

*NOTE: Maximum Particle Size is determined by direct observation within the limitations of sampler size.

NOTE: Soil identifications based on visual-manual methods of the USCS system as practiced by Haley & Aldrich, Inc.

K:\templates\forms\uscsfb_typing_log.xls

HALEY & ALDRICH

TEST BORING REPORT

BORING NO. MWB007

Depth (ft.)	Sampler Blows per 6 in.	Sample No. & Recovery (in.)	Sample Depth (ft.)	Well Diagram	Stratum Change (ft.)	USCS Symbol	Visual-Manual Identification & Description (density/consistency, color, GROUP NAME & SYMBOL, maximum particle size*, structure, odor, moisture, optional descriptions, geologic interpretation)	Gravel % Coarse	Gravel % Fine	Sand % Coarse	Sand % Medium	Sand % Fine	% Fines	Field Test Dilatancy	Field Test Toughness	Field Test Plasticity	Field Test Strength
50							cement grout → 6.5 drums (3 bags of portland cement + 1/4 volclay per drum (55 gal))										
		SS-10 14"	54-55.5			SP	~~[illegible]~~ low dense, moderately loose, tan fine-grained sand, no structure, no odor, dry, poorly graded.										
60		SS-11 12"	59-60.5			SP-SM	moderately dense, brown fine sand to silty sand, layered (rusty stained laminae), no odor, moist.										
		SS-12 15"	64-65.5			ML	Dense, gray-brown sandy silt, some reddish stains of rust, no structure, no odor, moist.										
70		SS-13 17"	69-70.5		-69.5	CL	dense, slightly stiff, lt. brn sandy clay, no structure, no odor, moist.										
						SP	dense, light brn fine sand, no structure, no odor, slightly moist.										
		SS-14 16"	74-75.5		WT	SP-SM	→ SP like above, grading from med. to fine sand to silty sand with traces of ML										
80		SS-15 18"	79-80.5			SP	→ Same as above, tan, med. to fine sand, moist, no odor										
		SS-16 18"	84-85.5			SP	same as above, tan to light brn, poorly graded, moist no odor										
90		SS-17 17"	89-90.5			SP	like above, light brn.										
100																	

Bentonite Chips 3 bags

Filter pack Sand (14 bags)

HALEY & ALDRICH

TEST BORING REPORT

BORING NO. MWB020

Page 1 of

PROJECT	PARCEL A MWs	H&A FILE NO.	28882-506
LOCATION	C6 19503 S. NORMANDIE AVE	PROJECT MGR.	S. ZACHARY
CLIENT	BOEING	FIELD REP.	T. HAMMOND
CONTRACTOR	WDC	DATE STARTED	SA 6/4/05 7:00
DRILLER	STEVE HUSTON	DATE FINISHED	M 6/6/05 10:00

Elevation ft. Datum

Item	Casing	Sampler	Core Barrel
Type	HSA	SS	NA
Inside Diameter (in.)	6.25 ID	2.5	↓
Hammer Weight (lb.)	10% OD	140	
Hammer Fall (in.)	NA	30	

Boring Location

Rig Make & Model: CME-95

☒ Truck ☐ Tripod ☐ Cat-Head
☐ ATV ☐ Geoprobe ☒ Winch
☐ Track ☐ Air Track ☐ Roller Bit
☐ Skid ☐ ☒ Cutting Head

Hammer Type: ☒ Safety ☐ Doughnut ☐ Automatic

Drilling Mud: ☐ Bentonite ☐ Polymer ☒ None

Casing Advance: Type Method Depth: HSA

Drilling Notes:

Depth (ft.)	Sampler Blows per 6 in.	Sample No. & Recovery (in.)	Sample Depth (ft.)	Well Diagram	Stratum Change (ft.)	USCS Symbol	Visual-Manual Identification & Description (density/consistency, color, GROUP NAME & SYMBOL, maximum particle size*, structure, odor, moisture, optional descriptions, geologic interpretation)	% Coarse	% Fine	% Coarse	% Medium	% Fine	% Fines	Dilatancy	Toughness	Plasticity	Strength
0		HAND AUGER TRIANGLE PATTERN TO 10'															
							PORTLAND CEMENT WITH 5% BENTONITE GROUT - 6 DRUMS X 50 GAL = 300 GAL										
10		SS-1 735	9-10.5 12"			SC	HARD, LT BROWN, CLAYEY F SAND, LAYERED, NO ODOR, DRY										
		SS-2 740	14-15.5 18"			ML	VERY STIFF, LT BROWN, SILT WITH VF SAND, LAYERED, NO ODOR, DRY										
20		SS-3 745	19-20.5 18"				SAME AS ABOVE										
		SS-4 750	24-25.5 18"			SM	DENSE, LT BROWN, SILTY VF SAND, LAYERED, NO ODOR, LOW MOISTURE										
70		SS-5 705	29-30.5 18"			CL	V. STIFF, LT BROWN, SILTY CLAY WITH VF SAND, LAYERED, NO ODOR, LOW MOISTURE										
		SS-6 800	34-35.5 12"			SP	DENSE, LT BROWN TO TAN, POORLY GRADED VF SAND WITH SILT, NO STRUCTURE, NO ODOR, MOIST										
40		SS-7 805	39-40.5 18"		40	ML / SM	STIFF, LT BROWN, VF SANDY SILT, LAYERED, NO ODOR, LOW MOISTURE / DENSE, LT BROWN, SILTY VF SAND, NO STRUCTURE, NO ODOR, MOIST										
		SS-8 810	44-45.5 18"			SP	MED. DENSE, LT BROWN TO YELLOW-BROWN, POORLY GRADED VF-F SAND WITH SILT, LAYERED, NO ODOR, MOIST										
50		SS-9 815	49-50.5 18"		51	ML	STIFF, LT BROWN W/ RUST STAINING, SILT WITH CLAY AND VF SAND, LAYERED, NO ODOR, MOIST										
							2 BAGS MEDIUM BENTONITE CHIPS HYDRATED IN 1' LIFTS, 1 BUCKET TR-30 COATED PELLETS										
		SS-10 820	54-55.5 17"		56	ML	STIFF, LT BROWN, SILT WITH CLAY, LAYERED, NO ODOR, MOIST										
							#2/16 MONTEREY SAND 28 BAGS (56 - 118')										
							4-INCH DIAMETER SCH-40 PVC 0.020-INCH SLOTTED WELL SCREEN (58.5 - 98.5')										
60		SS-11 825	59-60.5 14"		59.5	SP	MED. DENSE, BROWN TO OLIVE-BROWN, POORLY GRADED F-M SAND, NO STRUCTURE, NO ODOR, MOIST										

Water Level Data

Date	Time	Elapsed Time (hr.)	Depth in feet to: Bottom of Casing	Bottom of Hole	Water

Sample ID: O Open End Rod; T Thin Wall Tube; U Undisturbed Sample; S Split Spoon Sample; G Geoprobe

Well Diagram: Riser Pipe; Screen; Filter Sand; Cuttings; Grout; Concrete; Bentonite Seal

Summary: Overburden (Linear ft.) ____; Rock Cored (Linear ft.) ____; Number of Samples ____

BORING NO. MW B020

Field Tests: Dilatancy: R - Rapid S - Slow N - None; Toughness: L - Low M - Medium H - High; Plasticity: N - Nonplastic L - Low M - Medium H - High; Dry Strength: N - None L - Low M - Medium H - High V - Very High

*NOTE: Maximum Particle Size is determined by direct observation within the limitations of sampler size.

NOTE: Soil identifications based on visual-manual methods of the USCS system as practiced by Haley & Aldrich, Inc.

J:\forms\Vista3700.xls

HALEY & ALDRICH

TEST BORING REPORT

BORING NO. MW B020

Page of

Depth (ft.)	Sampler Blows per 6 in.	Sample No. & Recovery (in.)	Sample Depth (ft.)	Well Diagram	Stratum Change (ft.)	USCS Symbol	Visual-Manual Identification & Description (density/consistency, color, GROUP NAME & SYMBOL, maximum particle size*, structure, odor, moisture, optional descriptions, geologic interpretation)	Gravel % Coarse	Gravel % Fine	Sand % Coarse	Sand % Medium	Sand % Fine	% Fines	Field Test Dilatancy	Field Test Toughness	Field Test Plasticity	Field Test Strength
60		SS-11 825	59-60.5 14"		59.5	SP	MED. DENSE, BROWN TO OLIVE-BROWN, POORLY GRADED F-M SAND, NO STRUCTURE, NO ODOR, MOIST										
		SS-12 930	64-65.5 18"			SM	MED. DENSE TO DENSE, BROWN TO OLIVE-BROWN, SILTY SAND, LAYERED, NO ODOR, MOIST, LAYERS OF SILT UP TO 0.5" THICK AT 69.5' BGS										
70		SS-13 835	69-70.5 18"		69.5 / 70.5	SP	DENSE, BROWN, POORLY GRADED F-M SAND, NO STRUCTURE, NO ODOR, MOIST										
		SS-14 940	74-75.5 12"			SM	DENSE, BROWN TO OLIVE-BROWN, SILTY SAND, LAYERED, NO ODOR, MOIST, LAYERS OF SILT UP TO 0.25" THICK AT 75.5' BGS										
80		SS-15 840	79-80.5 8"			SP	MED. DENSE, BROWN WITH RUST STAINING, POORLY GRADED SAND, LAYERED, NO ODOR, MOIST, SILT LAYER UP TO 1" THICK AT 84.5' BGS MW B020-SS080-0001										
		SS-16 850	84-85.5 18"				SAME AS ABOVE WITHOUT RUST STAINING & WITH TRACE SILT, LAYER OF SILT 0.5" THICK AT 91' BGS										
90		SS-17 855	89-90.5 17"		89.5 / 90		SAME AS ABOVE.										
		SS-18 900	94-95.5 17"		94.5	CL	STIFF, OLIVE-BROWN, WITH RUST STAINING, SILTY CLAY WITH VF SAND, LAYERED, NO ODOR, MOIST, 2" GRAY CLAY SAND W/ SHELL FRAGMENTS @ 100.5										
100		SS-19 915	99-100.5 18"			SP	DENSE LT BROWN, POORLY GRADED F-M SAND W/ CHERT FRAGMENTS, LAYERED, NO ODOR, MOIST MW B020-SS100-0001										
		SS-20 920	104-105.5 0"				SLUFF - SP										
110		SS-21 925	109-110.5 0"				SLUFF - SP										
					#2/16 MONTEREY SAND 28 BAGS (56-118')												
		SS-22 930	114-115.5 12"			SP	MED. DENSE, LT BROWN, POORLY GRADED F-M SAND, NO STRUCTURE, NO ODOR, WET										
			118		COLLAPSED NATIVE (118 - 120.5)												
120					120.5		BOTTOM OF BOREHOLE @ 120.5'										

NOTES:

FILE NO.

BORING NO.

*NOTE: Maximum Particle Size is determined by direct observation within the limitations of sampler size.

NOTE: Soil identifications based on visual-manual methods of the USCS system as practiced by Haley & Aldrich, Inc.

J:\forms\final\5701.xls

HALEY & ALDRICH

TEST BORING REPORT

BORING NO. MWC004

PROJECT	Former Boeing C-6 GW Remed.	H&A FILE NO.	28882-506
LOCATION	Parcel A Monitoring wells	PROJECT MGR.	Scott Zachary
CLIENT	Boeing Realty Corporation	FIELD REP.	Paul Sones
CONTRACTOR	WDC Exploration + Wells	DATE STARTED	M. 6/6/05 1300
DRILLER	IGNACIO GUTIERREZ	DATE FINISHED	Tu 6/7/05 1430

Elevation ~51 ft. Datum 1929 Boring Location SW Corner of 1441 Knox St. (Quiznos Sub Bldg)

Item	Casing	Sampler	Core Barrel
Type			
Inside Diameter (in.)			
Hammer Weight (lb.)			
Hammer Fall (in.)			

Rig Make & Model: CME

- [x] Truck
- [ ] ATV
- [ ] Track
- [ ] Skid
- [ ] Tripod
- [ ] Geoprobe
- [ ] Air Track
- [ ] Cat-Head
- [x] Winch
- [ ] Roller Bit
- [x] Cutting Head

Hammer Type: [ ] Safety [ ] Doughnut [ ] Automatic

Drilling Mud: [ ] Bentonite [ ] Polymer [x] None

Casing Advance Type Method Depth: Hollow Stem Auger

Drilling Notes:

Depth (ft.) Time	Sampler Blows per 6 in.	Sample No. & Recovery (in.)	Sample Depth (ft.)	Well Diagram	Stratum Change (ft.)	USCS Symbol	Visual-Manual Identification & Description (density/consistency, color, GROUP NAME & SYMBOL, maximum particle size*, structure, odor, moisture, optional descriptions, geologic interpretation)	Gravel % Coarse	Gravel % Fine	Sand % Coarse	Sand % Medium	Sand % Fine	% Fines	Field Test Dilatancy	Field Test Toughness	Field Test Plasticity	Field Test Strength
0			cuttings		Surface		Soil in landscaped Area - Hand Auger To 10' bgs in Triangle Pattern										
					Concrete +12"ø Flush mount well box	SM	Dense, DK Olive Brown, Sandy Silt (SM) w/ some Clay, No Structure, No odor, sl. moist, FILL										
5			cuttings			ML	(from H.A. Cuttings) Dense, Reddish Brown, SILT (ML), No structure, No odor, dry,										
10 1325	10 20 25	14"				ML	Dense, DK Olive Brown, Sandy Silt (ML) V.f. Sand Grains, No structure, No odor, Dry,										
15 1332	8 13 18	18"				SP	Loose, DK olive Brn, Sand, Very fine (SP) Grn, No Structure, Dry to Sl. moist, No odor										
20 1335	8 16 20	18"				SM	Sl. Dense to Loose, DK Olive Brn, Silty Sand (SM) w/ Trace Clay, V.f. Grain Sand, No Structure, Sl. moist, No odor										
25 1339	10 13 21	18"					Same as above, Clay content Sl. higher										
30	12 18 24	18"					Same as @ 25'										

Water Level Data

Date	Time	Elapsed Time (hr.)	Depth in feet to: Bottom of Casing	Bottom of Hole	Water

Sample ID: O Open End Rod; T Thin Wall Tube; U Undisturbed Sample; S Split Spoon Sample; G Geoprobe

Well Diagram: Riser Pipe; Screen; Filter Sand; Cuttings; Grout; Concrete; Bentonite Seal

Summary: Overburden (Linear ft.) ____; Rock Cored (Linear ft.) ____; Number of Samples ____

BORING NO.

Field Tests: Dilatancy: R - Rapid S - Slow N - None; Toughness: L - Low M - Medium H - High; Plasticity: N - Nonplastic L - Low M - Medium H - High; Dry Strength: N - None L - Low M - Meduim H - High V - Very High

*NOTE: Maximum Particle Size is determined by direct observation within the limitations of sampler size.

NOTE: Soil identifications based on visual-manual methods of the USCS system as practiced by Haley & Aldrich, Inc.

K:\template\forms\uscstb_typing_log.xls

HALEY & ALDRICH

TEST BORING REPORT

BORING NO. MWC004

Depth (ft.)	Sampler Blows per 6 in.	Sample No. & Recovery (in.)	Sample Depth (ft.)	Well Diagram	Stratum Change (ft.)	USCS Symbol	Visual-Manual Identification & Description (density/consistency, color, GROUP NAME & SYMBOL, maximum particle size*, structure, odor, moisture, optional descriptions, geologic interpretation)	Gravel % Coarse	Gravel % Fine	Sand % Coarse	Sand % Medium	Sand % Fine	% Fines	Field Test Dilatancy	Field Test Toughness	Field Test Plasticity	Field Test Strength
30						SM	See other page										
35 1348	15 21 23	18"				SP	Loose, Lt Olive Brown, Sand, V.f. Grain, poorly Graded, No Structure Sl. Moist, No odor					100			N	N	N
40 1352	18 23 25	16"				SP	Same as above					100			N	N	N
45	11 22 28	18"				ML	Dense, Olive Gray, Clayey Silt w/ V.f. Sand, Orange Mottles ~10%, Moist No odor in contact w/										
						SP	Loose, yellowish Gray, Sand, V.f. Grain, No structure, Dry To Sl. moist, No odor										
50 1403	17 21 29	18"				SW	Sl. Dense To Loose, Reddish Brown, f. to med. Grained Sand Gravelly Sand, No Structure, Gravel To 1cm dia., Dry To Sl. Moist, No odor - in contact w/ (Gradational)										
						ML	Sl. Dense, Olive Green, Silt (ML) w/ Trace Clay & V.f. Sand, Orange Mottles, Moist, No odor										
55 1412	15 18 31	18"				ML	Sl. Dense To Loose, Olive Brown, Sandy Silt (ML) V.f. Grained Sand, Orange Mottles, moist To wet, No odor										
60 1417	10 27 33	18"				ML	Sl. Dense, DK Olive Brown Sandy Silt (ML) w/ orange Mottles, moist, No odor Grades To										
						SP	Loose, DK Olive Brown, Sand, f. Grained Sand, Orange mottles, Sl. moist, No odor										
65 1422	23 35 37	18"				SP	Loose, Olive Green to Brown, Sand (f. Grained), orange mottles, Grades To v.f. Grain, Very moist To wet, No odor										
70							See Next Page										

NOTES:

FILE NO. 28882-506

BORING NO. MWC004

*NOTE: Maximum Particle Size is determined by direct observation within the limitations of sampler size.

...methods of the USCS system as practiced by Haley & Aldrich, Inc.

templates\forms\uscsfb_typing_log.xls

HALEY & ALDRICH

TEST BORING REPORT

BORING NO. MWC004

Depth (ft.)	Sampler Blows per 6 in.	Sample No. & Recovery (in.)	Sample Depth (ft.)	Well Diagram	Stratum Change (ft.)	USCS Symbol	Visual-Manual Identification & Description (density/consistency, color, GROUP NAME & SYMBOL, maximum particle size*, structure, odor, moisture, optional descriptions, geologic interpretation)	Gravel % Coarse	Gravel % Fine	Sand % Coarse	Sand % Medium	Sand % Fine	% Fines	Field Test Dilatancy	Field Test Toughness	Field Test Plasticity	Field Test Strength
	14																
70 1428	19 29	18"				SP	Loose, DK Olive Green, Sand (V.f. To f. Grained, No structure, wet, No odor										
					PORTLAND CEMENT WITH 5% BENTONITE GROUT 8 DRUMS X 50 GAL = 400 GAL												
75 1439	13 18 20	18"				SP	Loose, DK Olive Brown, Sand, v.f. Grained, No structure, Saturated, No odor										
80 1440	9 20 26	18"				ML/ SP	Sl. Dense TO Loose, DK. Olive Green, Silt w/ 2" Layer of f. To med. Sand Orange mottles, Weet TO Saturated, NO odor.										
85	7 21 28					SP	Loose, DK Olive Brown, Sand (f. to med. Grained), No structure, Saturated, No odor.										
					4-INCH DIAMETER SCH-40 PVC WELL CASING (0.5-96')												
			88		1/4" TR-10 COATED BENTONITE PELLETS (88-93') 3 BUCKETS												
90 1450		18"				SP	Loose to Sl. Dense, DK Olive Brown Sand (V.f. Grained) w/ Trace Silt, Grades to med. Sand, No structure, Saturated, No Odor										
			93														
95 1454	20 31 35	18"			96	ML/ SP	Sl. Dense, DK Olive Brown, Silt. Grading to f. Sand, No structure, Saturated, No odor, Sea shells near bottom										
100 1500	20 31 35	18"				SM	Sl. Dense, DK. Olive Brown Silty Sand w/ Some shells (40% fragments) (V.f. Grained Sand), No Structure, Saturated, No Odor.										
					#2/12 MONTEREY SAND 11 BAGS (93-116.5)												
					4" DIAMETER SCH-40 PVC WELL SCREEN (96-116')												
105	11 38 37	18"				SM/ SP	as above, Shell content decreased to ~15%, Saturated, No odor. 4" of med. to Coarse Sand at base										
110							See Next Page										

NOTES:

FILE NO. 28882-506

BORING NO. MWC004

*NOTE: Maximum Particle Size is determined by direct observation within the limitations of sampler size.

NOTE: Soil identifications based on visual-manual methods of the USCS system as practiced by Haley & Aldrich, Inc.

K:\templates\forms\uscsb_typing_log.xls

HALEY & ALDRICH

TEST BORING REPORT

BORING NO. MWC004

Depth (ft.)	Sampler Blows per 6 in.	Sample No. & Recovery (in.)	Sample Depth (ft.)	Well Diagram	Stratum Change (ft.)	USCS Symbol	Visual-Manual Identification & Description (density/consistency, color, GROUP NAME & SYMBOL, maximum particle size*, structure, odor, moisture, optional descriptions, geologic interpretation)	Gravel % Coarse	Gravel % Fine	Sand % Coarse	Sand % Medium	Sand % Fine	% Fines	Field Test Dilatancy	Field Test Toughness	Field Test Plasticity	Field Test Strength
	18					SM											
110	20 31	18"				SP SM	Sl. Dense, DK Olive Brown, Silty Sand, (v.f. Grained) No structure, Saturated, Then 8" Lens of med. To Coarse Sand, No structure, No odor Then 4" of Dense, DK Olive Brown Clayey Silt, No structure, V. Moist, No odor										
1510																	
							4" DIAMETER SCH-40 PVC 0.020-INCH SLOT WELLSCREEN (96-116')										
							#2/16 MONTEREY SAND IN BAGS (93-116.5')										
115		18"				SP	Loose, DK olive Brown, Sand (med. To Coarse grained) with Trace Gravel To 0.5 cm dia., No structure, Saturated, No odor										
1518					END CAP 116-116.5												
			116.5														
							COLLAPSED NATIVE 116.5-118'										
			118														
							BOTTOM OF BORING AT 118'										
120																	

HALEY & ALDRICH

TEST BORING REPORT

BORING NO. MWC022

PROJECT	PARCEL A MWS	H&A FILE NO.	28882-506
LOCATION	C6 19503 S NORMANDIE AVE	PROJECT MGR.	S. ZACHARY
CLIENT	BOEING	FIELD REP.	T. HAMMOND
CONTRACTOR	WDC EXPLORATION	DATE STARTED	M 6/6/05 1300
DRILLER	JORGE GUTIERREZ	DATE FINISHED	TU 6/7/05 1500

Elevation ft. Datum

Boring Location

Item	Casing	Sampler	Core Barrel
Type	HSA	SS	NA
Inside Diameter (in.)	6.25 ID	2.5	NA
Hammer Weight (lb.)	10 OD	140	
Hammer Fall (in.)	NA	30	

Rig Make & Model: CME 75

- [x] Truck
- [ ] ATV
- [ ] Track
- [ ] Skid
- [ ] Tripod
- [ ] Geoprobe
- [ ] Air Track
- [ ] Cat-Head
- [x] Winch
- [ ] Roller Bit
- [x] Cutting Head

Hammer Type: [ ] Safety [ ] Doughnut [x] Automatic

Drilling Mud: [ ] Bentonite [ ] Polymer [x] None

Casing Advance Type Method Depth: HSA

Drilling Notes:

Depth (ft.)	Sampler Blows per 6 in. (PID)	Sample No. & Recovery (in.)	Sample Depth (ft.)	Well Diagram	Stratum Change (ft.)	USCS Symbol	Visual-Manual Identification & Description (density/consistency, color, GROUP NAME & SYMBOL, maximum particle size*, structure, odor, moisture, optional descriptions, geologic interpretation)	Gravel % Coarse	Gravel % Fine	Sand % Coarse	Sand % Medium	Sand % Fine	% Fines	Field Test Dilatancy	Field Test Toughness	Field Test Plasticity	Field Test Strength
0		HAND AUGER TRIANGLE PATTERN TO 10'															
							PORTLAND CEMENT + 5% BENTONITE GROUT 9 DRUMS x 50 GAL = 450 GAL										
10		SS-1 1300	9-10.5 18"			CL	STIFF, BROWN, SILTY CLAY, LAYERED, NO ODOR MOIST										
	(0.0)	SS-2 1305	14-15.5 18"			ML	MED STIFF, BROWN, SILT WITH CLAY & VF SAND, LAYERED NO ODOR, MOIST										
20		SS-3 1310	19-20.5 18"				SAME AS ABOVE										
		SS-4 1325	24-25.5 18"			CL	STIFF, LT BROWN, SILTY CLAY, LAYERED, NO ODOR, MOIST										
30		SS-5 1330	29-30.5 18"		30	ML	STIFF, LT BROWN TO BROWN, CLAYEY SILT W/ VF SAND NO STRUCTURE, NO ODOR, MOIST										
		SS-6 1335	34-35.5 18"				SAME AS ABOVE										
40		SS-7 1340	39-40.5 18"			CL	STIFF, BROWN, SILTY CLAY, LAYERED, NO ODOR, MOIST										
		SS-8 1345	44-45.5				COLOR CHANGE TO LT GRAY-BROWN										
50	(14.0)	SS-9 1350	49-50.5			SM	DENSE YELLOW-BROWN W/ RUST STAINING, SILTY VF-F SAND W/ WEATHERED SHELL FRAGMENTS, LAYERED, NO ODOR, LOW MOISTURE										
		SS-10 1355	54-55.0 11"				SAME AS ABOVE										
60	(32)	SS-11 14:10	59-60.5 14"			SP.	MED. DENSE, LT BROWN, POORLY GRADED VF-F SAND WITH SILT LAYERED, NO ODOR, MOIST TO WET										

Water Level Data

Date	Time	Elapsed Time (hr.)	Depth in feet to: Bottom of Casing	Bottom of Hole	Water

Sample ID

- O Open End Rod
- T Thin Wall Tube
- U Undisturbed Sample
- S Split Spoon Sample
- G Geoprobe

Well Diagram

- Riser Pipe
- Screen
- Filter Sand
- Cuttings
- Grout
- Concrete
- Bentonite Seal

Summary

Overburden (Linear ft.)

Rock Cored (Linear ft.)

Number of Samples

BORING NO. MWC022

Field Tests Dilatancy: R - Rapid S - Slow N - None Plasticity: N - Nonplastic L - Low M - Medium H - High

Toughness: L - Low M - Medium H - High Dry Strength: N - None L - Low M - Meduim H - High V - Very High

*NOTE: Maximum Particle Size is determined by direct observation within the limitations of sampler size.

NOTE: Soil identifications based on visual-manual methods of the USCS system as practiced by Haley & Aldrich, Inc.

HALEY & ALDRICH

TEST BORING REPORT

BORING NO. MWC022

Depth (ft.)	Sampler Blows per 6 in.	Sample No. & Recovery (in.)	Sample Depth (ft.)	Well Diagram	Stratum Change (ft.)	USCS Symbol	Visual-Manual Identification & Description (density/consistency, color, GROUP NAME & SYMBOL, maximum particle size*, structure, odor, moisture, optional descriptions, geologic interpretation)	Gravel % Coarse	Gravel % Fine	Sand % Coarse	Sand % Medium	Sand % Fine	% Fines	Field Test Dilatancy	Field Test Toughness	Field Test Plasticity	Field Test Strength
60		SS-11					SEE ABOVE										
		SS-12 1420	64-65.5 9"				SAME AS ABOVE										
70	(260)	SS-13 1430	69-70.5 18		71	SP ML	MED. DENSE, LT BROWN, POORLY GRADED VF SAND W/SILT LAYERED, NO ODOR, MOIST MED. STIFF, LT BROWN TO OLIVE-BROWN, VF SANDY SILT LAYERED, NO ODOR, MOIST										
		SS-14 1440	74-75.5 19"		74.5	SP	MED DENSE, GRAY-BROWN POORLY GRADED F-M SAND, LAYERED, NO ODOR, MOIST										
80	(78)	SS-15 1450	79-80.5 18"				SAME AS ABOVE, YELLOW-BROWN										
							PORTLAND CEMENT + 5% BENTONITE GROUT 9 BAGS X 50 GAL = 450 GAL										
	(74)	SS-16 1500	84-85.5 18"			SM	MED DENSE, LT BROWN, SILTY VF SAND W/LAYERS OF SILT UP TO 1/2 INCH THICK, LAYERED, NO ODOR, MOIST										
					88		1/4" TR-30 COATED BENTONITE PELLETS 3 BUCKETS (88-93.5')										
90	(7)	SS-17 1505	89-90.5 15"			SP	MED DENSE LT BROWN POORLY GRADED VF-F SAND WITH SHELL FRAGMENTS, LAYERED, NO ODOR, MOIST TO WET										
					93.5												
		SS-18 1510	94-95.5 10"			SC	DENSE, LT BROWN, CLAYEY VF-F SAND W/ SHELL FRAGMENTS LAYERED, NO ODOR, MOIST										
					97												
100		SS-19 1520	99-100.5 16"			SP	DENSE LT BROWN, POORLY GRADED VF SAND W/SILT LAYERED, NO ODOR, MOIST										
							#2/12 MONTEREY SAND (93.5'-117.5') 9.5 BAGS										
		SS-20 1530	104-105.5 6"				SAME AS ABOVE										
							4" DIAMETER SCH40 PVC 0.020-INCH SLOTTED WELL SCREEN (97-117')										
110		SS-21 1540	109-110.5 18"			SP	VERY DENSE, LT BROWN POORLY GRADED VF-F SAND WITH SHELL FRAGMENTS & PARTIALLY CEMENTED NODULES NO STRUCTURE, NO ODOR, WET MWB022_SS110_0001										
	(47)	SS-22 1555	114-115.5 18"			SP	DENSE, LT BROWN, POORLY GRADED VF-F SAND, LAYERED, NO ODOR, WET										
							4" DIAMETER END CAP (117-117.5)										
					117.5		COLLAPSED NATIVE 117.5-120										
120					120		BOTTOM OF BOREHOLE @ 120'										

NOTES:

FILE NO.

BORING NO. MWC022

*NOTE: Maximum Particle Size is determined by direct observation within the limitations of sampler size.

NOTE: Soil identifications based on visual-manual methods of the USCS system as practiced by Haley & Aldrich, Inc.

K:\templates\forms\uscsb_field_log.xls

HALEY & ALDRICH

TEST BORING REPORT

BORING NO. MWCØ23

Page 1 of

PROJECT	Boeing C-6	H&A FILE NO.	28887-506
LOCATION	19503 Normandie	PROJECT MGR.	Scott Zachary
CLIENT	Boeing	FIELD REP.	R. Ramzi
CONTRACTOR	WDC	DATE STARTED	M. 6/6/05 0830
DRILLER	Steve Huston	DATE FINISHED	Tu 6/7/05 1300

Elevation	ft.	Datum			Boring Location				Hammer Type	Drilling Mud	Casing Advance
Item	Casing	Sampler	Core Barrel		Rig Make & Model	CME-95			Safety	Bentonite	Type Method Depth
Type	HSA	SS	NA		☒ Truck	☐ Tripod	☐ Cat-Head		Doughnut	Polymer	HSA
Inside Diameter (in.)	6.25"	1.5			☐ ATV	☐ Geoprobe	☒ Winch		Automatic	None	
Hammer Weight (lb.)	OD=10"	140			☐ Track	☐ Air Track	☐ Roller Bit				
Hammer Fall (in.)		30"			☐ Skid	☐	☒ Cutting Head				

Drilling Notes:

Depth (ft.)	Sampler Blows per 6 in.	Sample No. & Recovery (in.)	Sample Depth (ft.)	Well Diagram	Stratum Change (ft.)	USCS Symbol	Visual-Manual Identification & Description (density/consistency, color, GROUP NAME & SYMBOL, maximum particle size*, structure, odor, moisture, optional descriptions, geologic interpretation)	Gravel % Coarse	Gravel % Fine	Sand % Coarse	Sand % Medium	Sand % Fine	% Fines	Field Test Dilatancy	Toughness	Plasticity	Strength
0	Hand Auger to 10' in a triangle pattern			4-inch Diameter SCH-40 PVC Well Casing (0.5-97')													
				Portland Cement +5% Bentonite Grout 9 Drums x 50 Gal = 450 Gal													
			9-10.5'		-9.5-		Upper soil (top soil), d. brown										
10	SS-1	17"				CL	V. stiff, brn to d. brown clay, no structure, no odor, dry										
	SS-2	18"	14-15.5		-15-	SM ML	V. fine silty sand, med. dense, no structure, no odor, brn to lt. brown.										
20	SS-3	16"	19-20.5			SM-ML	~~V. stiff clay same as above.~~ dense, brn to lt brown sandy silt, no structure, no odor, dry										
							Like above										
	SS-4	17"	24-25.5			SM-ML	Same as above, more dense										
30	SS-5	18"	29-30.5			ML	dense to stiff, brn to lt. brn silt with traces of CL, slightly moist, no structure, no odor										
	SS-6	17"	34-35.5		-35-	SP SM	loose, v.f. sand, tan to lt. brn, dry, no odor, no structure → dense, brn to lt. brown silty sand w/ traces of ML, slightly moist, no odor, no structure.										
40	SS-7	18"	39-40.5			ML	Same as above, more stiff, high traces of clay.										
	SS-8	18"	44-45.5			ML-CL	very dense to stiff, olive brn to gray brown ML with CL traces of rust (stains), moderately moist, no structure, no odor.										
50	SS-9	16"	49-50.5			SP	loose, v.f. to f. sand, tan to reddish brn, a lot of fragmented and powdered sea shells, slightly moist, no structure, no odor, occasional pebbles and cobbles 1" diameter.										
	SS-10	16"	54-55.5			SM-ML	med. dense to dense, gray brn to olive brown, silty sand to sandy silt, a lot of rust stains (veins) slightly moist, no odor, no structure										
60																	

Water Level Data

Date	Time	Elapsed Time (hr.)	Depth in feet to: Bottom of Casing	Bottom of Hole	Water

Sample ID

- O Open End Rod
- T Thin Wall Tube
- U Undisturbed Sample
- S Split Spoon Sample
- G Geoprobe

Well Diagram

- Riser Pipe
- Screen
- Filter Sand
- Cuttings
- Grout
- Concrete
- Bentonite Seal

Summary

Overburden (Linear ft.) ____
Rock Cored (Linear ft.) ____
Number of Samples ____

BORING NO.

Field Tests

Dilatancy: R - Rapid S - Slow N - None
Toughness: L - Low M - Medium H - High
Plasticity: N - Nonplastic L - Low M - Medium H - High
Dry Strength: N - None L - Low M - Medium H - High V - Very High

*NOTE: Maximum Particle Size is determined by direct observation within the limitations of sampler size.

NOTE: Soil Identifications based on visual-manual methods of the USCS system as practiced by Haley & Aldrich, Inc.

K:\template\forms\uscsfb_typing_log.xls

HALEY & ALDRICH

TEST BORING REPORT

BORING NO. MWCØ23

Depth (ft.)	Sampler Blows per 6 in.	Sample No. & Recovery (in.)	Sample Depth (ft.)	Well Diagram	Stratum Change (ft.)	USCS Symbol	Visual-Manual Identification & Description (density/consistency, color, GROUP NAME & SYMBOL, maximum particle size*, structure, odor, moisture, optional descriptions, geologic interpretation)	Gravel % Coarse	Gravel % Fine	Sand % Coarse	Sand % Medium	Sand % Fine	% Fines	Field Test Dilatancy	Field Test Toughness	Field Test Plasticity	Field Test Strength
60	SS-11 16"		59-60.5			ML	dense, olive brn to gray brn silt with traces of Cl, moist, stains of rust, no structure, no odor										
	SS-12 12"		64-65.5 ▽			SM-SP	dense, olive brown to gray brn silty sand grades down to f. sand, moist, reddish rust stains, no odor, no structure. (wet)										
70	SS-13 15"		69-70.5			SM-SP	Same as above, more ~~varied~~ layered stains of rust, @ 69 a 0.25 ft layer of ML. no odor. moist.										
	SS-14 15"		74-75.5			SP	loose, tan f. sand to m. sand, with 0.5" to 1" layers of clay present (fragments). ~~[illegible]~~ and ML Cl and ML are olive to gray brown, stiff, moist, layered with stains of rust.										
80	SS-15 17"		79-80.5			SP	SP is moist, no odor. → same as above, med. sand, darker in color, no clay, but traces of ML.										
	SS-16 17"		84-85.5			SP	→ same as above, reddish to orange brn, more stains of rust, no fines.										
90	SS-17 18"		87 89-90.5	"4" TC-30 COATED BENTONITE PELLETS (87-94') 3 BUCKETS		SP	Fine to med. sand, light br, no rust, no fines, no odor, no structure, moist, med. dense										
	SS-18 18"		94-95.5	#2/16 MONTEREY SAND (94-117.5) 8.5 BAGS		SP	med. sand, lt. br, poorly graded, moist no structure, no odor, occasional stains, contains shell fragments @ 94' a 1.5" layer of ML/CL with large fragment of sea shells. PID = 1.2 ppm										
100	SS-19 17"		99-100.5	4-INCH DIAMETER SCH-40 PVC 0.020-INCH SLOTTED WELL SCREEN (97-117')		SP-ML	dense, tan to gray brown fine to v. f. sand, lots of sea shell fragments. Reddish rust stains occasional. Sand overlies a 5" to 6" layer of ML with the same color and large fragment of shells. No odor, moist, no structure. gray										
110	SS-21 18"		109-110.5 110-110.5			CL ML	stiff, tan to brn silty clay and silt about 1' thick, moist, no structure no odor.										
	SS-22 18"		114-115.5	4" DIAMETER SOLID SUMP 117-117.5	117.5	SP	fine sand, dense, same color as fines above, traces of silt, no structure, no odor.										
120				COLLAPSED NATIVE 117.5-120'		SP-SM	well graded, loose silty to med sand, tan to lt. brn, moist, occasional stains, no structure, no odor. (wet) PID = 140 ppm										

Bottom of boring @ 120'

NOTES:

FILE NO. 28882-506

BORING NO. MWC022

*NOTE: Maximum Particle Size is determined by direct observation within the limitations of sampler size.

NOTE: Soil identifications based on visual-manual methods of the USCS system as practiced by Haley & Aldrich, Inc.

K:\templates\forms\uscsdb_typing_log.xls

HALEY & ALDRICH

Well Construction Record
Parcel C Remediation Well Installation Program
Former Boeing C-6 Site
Los Angeles, California

Well ID: AW0131B
Start Date/Time: 6-6-05/0935
Finish Date/Time: 6-7-05/1130
Driller/Rig: WDC/CME 75/Miguel
Geologist: G. Androsko
Amendment Well Stick-up Height (minimum 24-in) 30 inches AGS

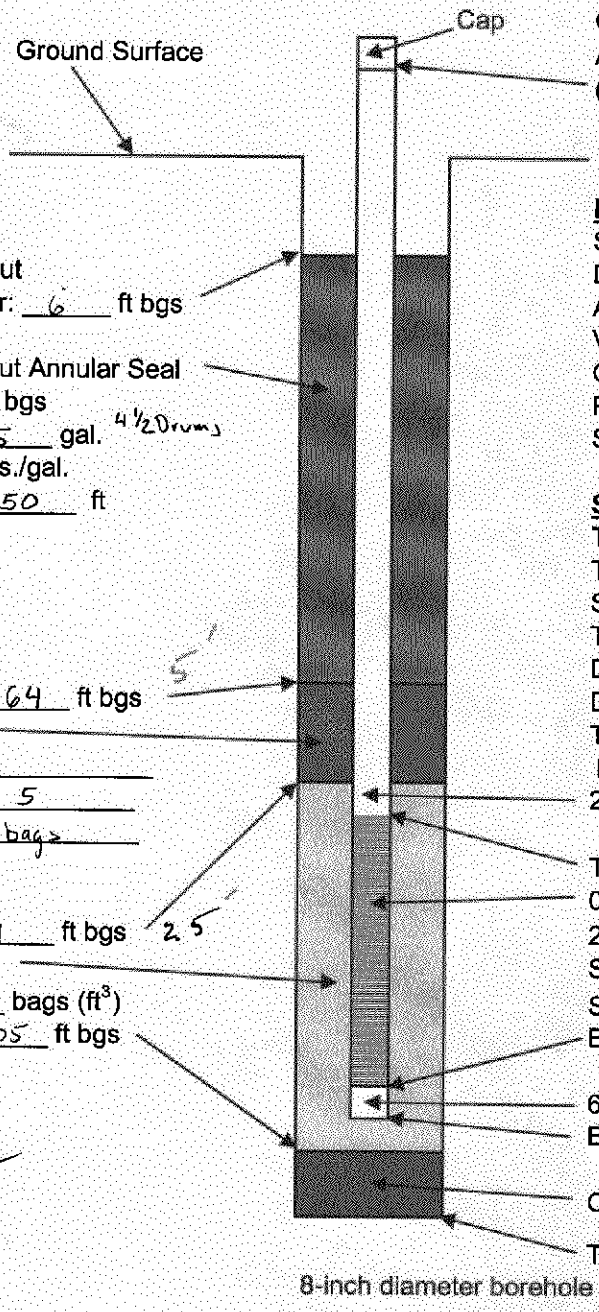

Cement/Bentonite Grout
Top of grout after 24 hr: 6 ft bgs

Cement/Bentonite Grout Annular Seal
Filled to 3 ft bgs
Volume Placed 225 gal. 4 1/2 Drums
Density 15 lbs./gal.
Tremie Pipe Length 50 ft

Top of bentonite seal 64 ft bgs 5'
Bentonite Seal
Type Med Chips
Thickness (5 ft min) 5
Volume Placed: 2 bags

Top of filter pack 69 ft bgs 2.5'
No.3 Sand Filter Pack
Volume Placed 9 1/2 bags (ft³)
Bottom of filter pack 105 ft bgs

QA/QC: PR
Date: 6/10/05

ELEVATION DATA

Stake Elevation	54.49
Datum Differential	NA
Adjusted Stake Elevation	54.49
Vertical Offset to Stake	NA
Ground Elevation at Well	54.49
Planned Screen Elevation	-16 to -46 (Below DTW)
Screen Interval (Depth)	70.5 to 100.5 Adjusted down to 72.5 to 102.5

SURGE/DEPTH RECORD

TD Inside Well Before Surging	101.6 (to TOC)
Top of Sand Before Surging	69
Surge Time	15 min 0900→0915
Top of Sand After Surging	72
Distance Sand Dropped	3
DTW Inside Well After Surging	70.06
TD Inside Well After Surging	101

DTW inside borehole after 68.35

2-inch diameter SCH-40 Blank casing

Top of screen 71.5 ft bgs
0.020 - inch Machine Sotted Screen
2-inch diameter, High Flow
SCH - 40 PVC
Screen Length 30 ft
Bottom of Screen 101.5 ft bgs

6-inch long Threaded End Cap
Bottom of Cap 102 ft bgs

Collapsed Native Material

Total Depth of Borehole 105 ft bgs

COMMENTS

Hand Augered to 7' - Hit layer of slurry? started drilling - 1208 Rig down for repairs
1550 Drilled to 60' Stopped for the day
Location moved 9' N to avoid stormdrain

Note

HALEY & ALDRICH

Well Construction Record
Parcel C Remediation Well Installation Program
Former Boeing C-6 Site
Los Angeles, California

Well ID: AW Ø 134UB
Start Date/Time: 6-7-05 / 0745
Finish Date/Time: 6-7-05 / 1300
Driller/Rig: WDC/CME 95/Paul
Geologist: G. Androsko

Amendment Well Stick-up Height (minimum 24-in) 36 inches AGS

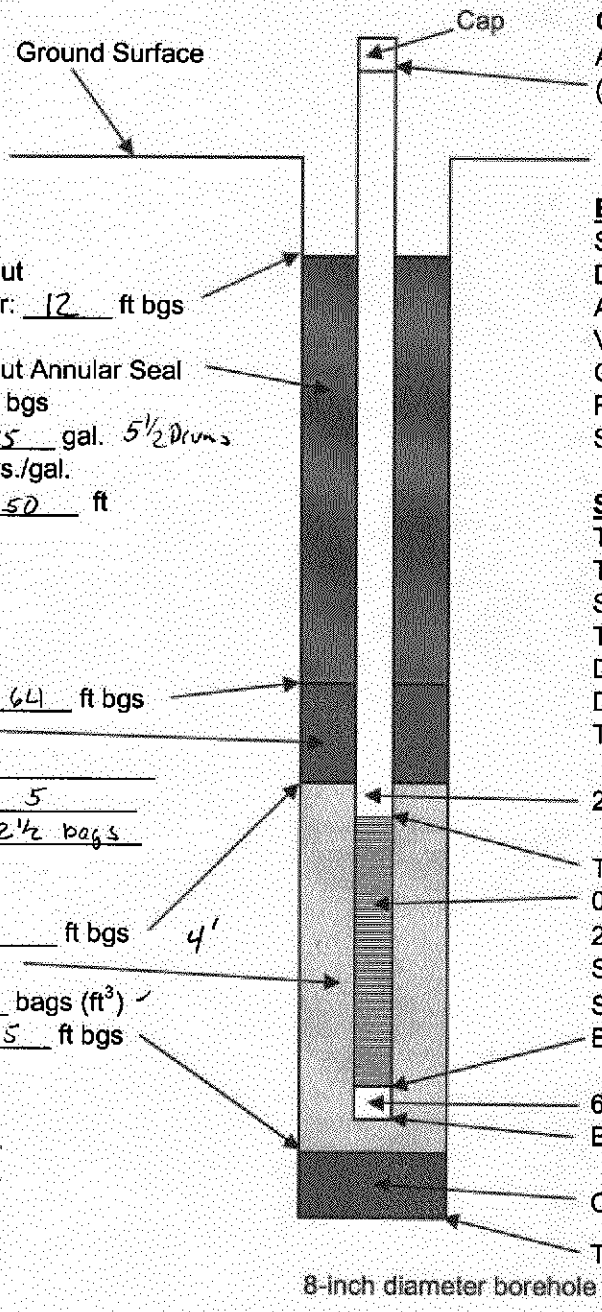

Cement/Bentonite Grout
Top of grout after 24 hr: 12 ft bgs

Cement/Bentonite Grout Annular Seal
Filled to 4 ft bgs
Volume Placed 275 gal. 5½ Drums
Density 15 lbs./gal.
Tremie Pipe Length 50 ft

Top of bentonite seal 64 ft bgs
Bentonite Seal
Type med chips
Thickness (5 ft min) 5
Volume Placed: 2½ bags

Top of filter pack 69 ft bgs 4'
No.3 Sand Filter Pack
Volume Placed 8 bags (ft^3)
Bottom of filter pack 95 ft bgs

QA/QC: RB
Date: 6/10/05

ELEVATION DATA

Stake Elevation	54.68
Datum Differential	NA
Adjusted Stake Elevation	54.68
Vertical Offset to Stake	NA
Ground Elevation at Well	54.68
Planned Screen Elevation	-16 to -36
Screen Interval (Depth)	70.5 to 90.5
	Adjusted down to 72.5 to 92.5

SURGE/DEPTH RECORD

TD Inside Well Before Surging	92
Top of Sand Before Surging	69
Surge Time	10 min 0953 → 1000
Top of Sand After Surging	69
Distance Sand Dropped	0
DTW Inside Well After Surging	70.57 (TOC)
TD Inside Well After Surging	92
DTW inside borehole after	70.40

2-inch diameter SCH-40 Blank casing

Top of screen 72 ft bgs
0.020 - inch Machine Sotted Screen
2-inch diameter, High Flow
SCH - 40 PVC
Screen Length 20 ft
Bottom of Screen 92 ft bgs

6-inch long Threaded End Cap
Bottom of Cap 92.5 ft bgs

Collapsed Native Material

Total Depth of Borehole 95 ft bgs

COMMENTS

Moved location ~8' North of projected location to avoid storm drain

Note!

HALEY & ALDRICH

Well Construction Record
Parcel C Remediation Well Installation Program
Former Boeing C-6 Site
Los Angeles, California

Well ID: AW0130 B
Start Date/Time: 6-7-05/1230
Finish Date/Time: 6-8-05/ 0900
Driller/Rig: WDC/CME75/Mizuel
Geologist: G Androsko

Amendment Well Stick-up Height (minimum 24-in) 48 inches AGS

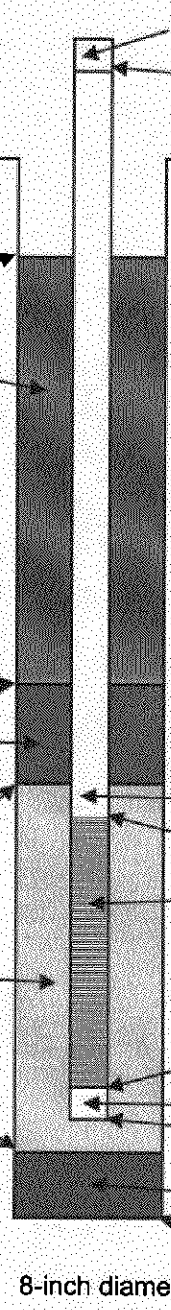

Cement/Bentonite Grout DTW 70.74 TD
Top of grout after 24 hr: 4 ft bgs

Cement/Bentonite Grout Annular Seal
Filled to 4 ft bgs
Volume Placed 250 gal. 5 Drums
Density 15 lbs./gal.
Tremie Pipe Length 50 ft

Top of bentonite seal 63 ft bgs
Bentonite Seal
Type Med chips
Thickness (5 ft min) 5'
Volume Placed: 2

Top of filter pack 68 ft bgs 3'
No.3 Sand Filter Pack
Volume Placed 10 bags (ft^3)
Bottom of filter pack 105 ft bgs

QA/QC: RS
Date: 6/10/05

ELEVATION DATA

Stake Elevation	54.39
Datum Differential	NA
Adjusted Stake Elevation	54.39
Vertical Offset to Stake	NA
Ground Elevation at Well	54.39
Planned Screen Elevation	-16 to -46
Screen Interval (Depth)	70.5 to 100.5 Adjusted to 72.5 to 102.5

SURGE/DEPTH RECORD

TD Inside Well Before Surging	71.5
Top of Sand Before Surging	69
Surge Time	15 1435-1449
Top of Sand After Surging	72
Distance Sand Dropped	3
DTW Inside Well After Surging	71.45
TD Inside Well After Surging	101.45
DTW inside borehole after	71.60

2-inch diameter SCH-40 Blank casing

Top of screen 71 ft bgs
0.020 - inch Machine Sotted Screen
2-inch diameter, High Flow
SCH - 40 PVC
Screen Length 30 ft
Bottom of Screen 101 ft bgs

6-inch long Threaded End Cap
Bottom of Cap ~~102.5~~ 101.5 ① ft bgs

Collapsed Native Material

Total Depth of Borehole 105 ft bgs

COMMENTS

① Clevis pin snagged well while removing auger – pulled up casing 2.1'
1520 Set bentonite plug & hydrated – removed auger to 55'
Moved location ~9' N of projected location to avoid storm drain

Note!

HALEY & ALDRICH

Well Construction Record
Parcel C Remediation Well Installation Program
Former Boeing C-6 Site
Los Angeles, California

Well ID: AWØ132B
Start Date/Time: 6-7-05 / 1330
Finish Date/Time: 6-8-05 / 1200
Driller/Rig: WDC/CMEØ5 / Paul
Geologist: G. Androsko

Amendment Well Stick-up Height (minimum 24-in) 32 inches AGS

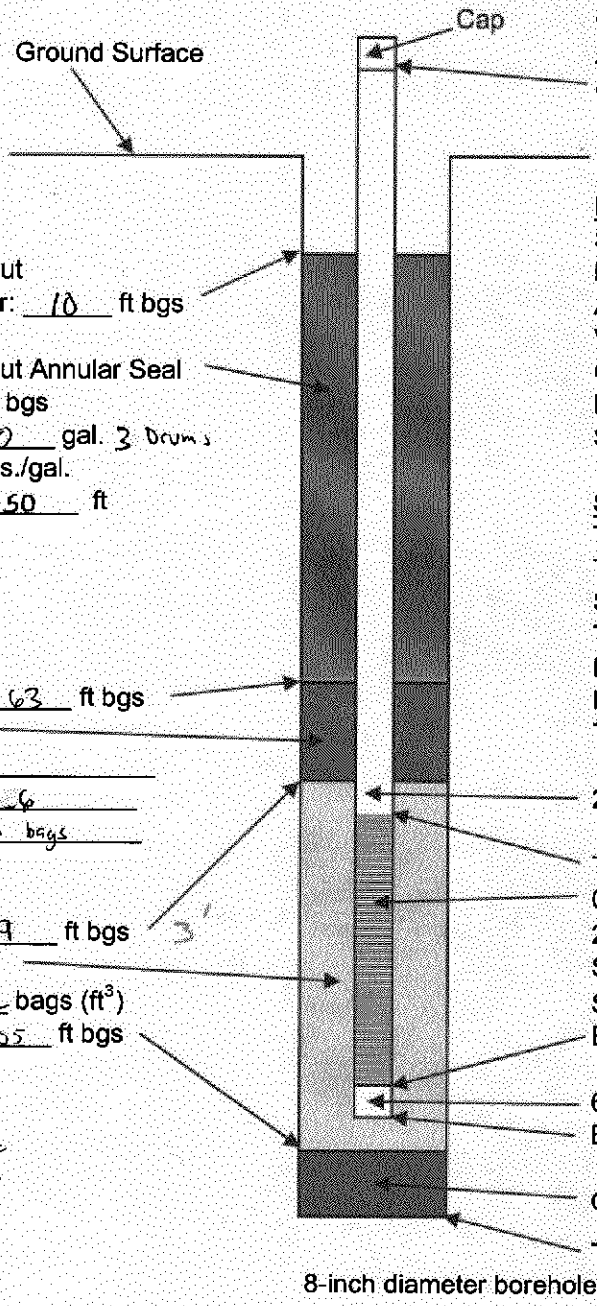

Cement/Bentonite Grout
Top of grout after 24 hr: 10 ft bgs

Cement/Bentonite Grout Annular Seal
Filled to 3 ft bgs
Volume Placed 180 gal. 3 Drums
Density 15 lbs./gal.
Tremie Pipe Length 50 ft

Top of bentonite seal 63 ft bgs
Bentonite Seal
Type Med. chips
Thickness (5 ft min) 6
Volume Placed: 3 bags

Top of filter pack 69 ft bgs 3'
No.3 Sand Filter Pack
Volume Placed 8 1/2 bags (ft³)
Bottom of filter pack 105 ft bgs

QA/QC: CRS
Date: 6/10/05

ELEVATION DATA

Stake Elevation	54.45
Datum Differential	NA
Adjusted Stake Elevation	54.45
Vertical Offset to Stake	NA
Ground Elevation at Well	54.45
Planned Screen Elevation	-16 to -46' (Below DTW)
Screen Interval (Depth)	70.5 to 100.5 Adjusted down to 72.5 to 102.5

SURGE/DEPTH RECORD

TD Inside Well Before Surging	102.5
Top of Sand Before Surging	69
Surge Time	12 0956 - 1008
Top of Sand After Surging	69
Distance Sand Dropped	Ø
DTW Inside Well After Surging	70.76
TD Inside Well After Surging	102.5
DTW inside borehole after	70.21

2-inch diameter SCH-40 Blank casing

Top of screen 72 ft bgs ✓
0.020 - inch Machine Sotted Screen
2-inch diameter, High Flow
SCH - 40 PVC
Screen Length 30 ft ✓
Bottom of Screen 102 ft bgs ✓

6-inch long Threaded End Cap
Bottom of Cap 102.5 ft bgs

Collapsed Native Material

Total Depth of Borehole 105 ft bgs @0855

COMMENTS

1510 Drilling stopped @ 25' - frayed cable needs to be replaced
Moved location ~9' N of projected location to avoid storm drain
6-8-05 0830 Cable repaired - resumed drilling

Note!

HALEY & ALDRICH

Well Construction Record
Parcel C Remediation Well Installation Program
Former Boeing C-6 Site
Los Angeles, California

Well ID: AW0129VB
Start Date/Time: 6-8-05 / 1000
Finish Date/Time: 6-8-05 / 1335
Driller/Rig: WDC/CME 75 / Miguel
Geologist: G. Androsko

Amendment Well Stick-up Height (minimum 24-in) 43 inches AGS

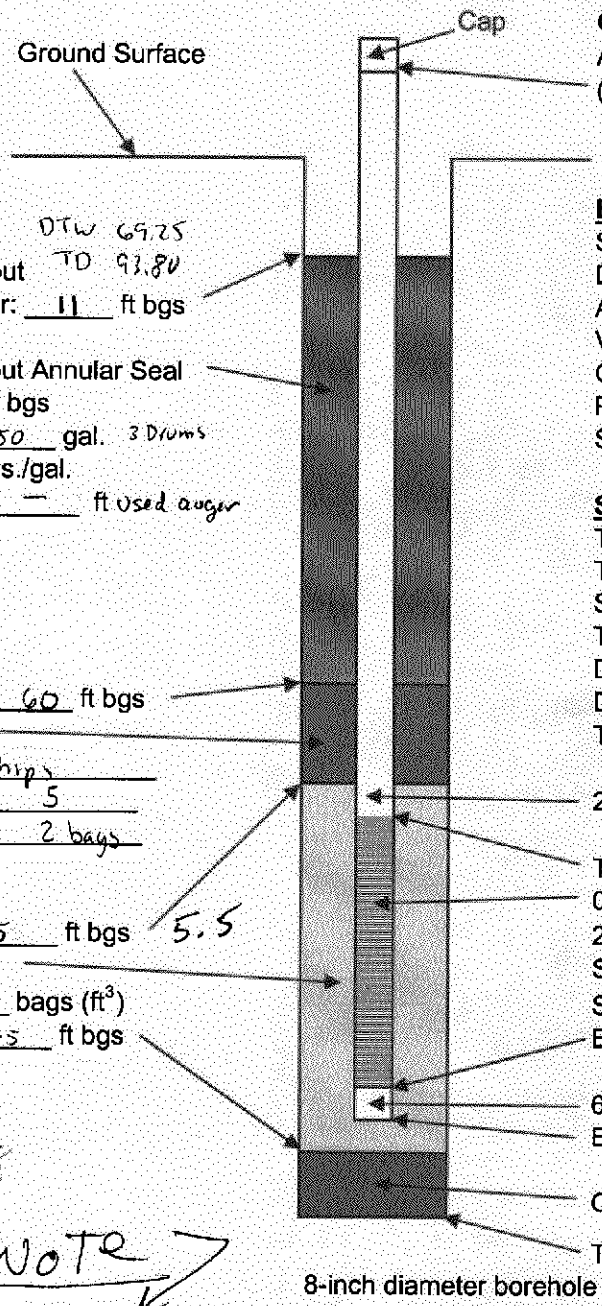

DTW 69.25
TD 93.80

Cement/Bentonite Grout
Top of grout after 24 hr: 11 ft bgs

Cement/Bentonite Grout Annular Seal
Filled to 3 ft bgs
Volume Placed 150 gal. 3 Drums
Density 15 lbs./gal.
Tremie Pipe Length — ft used auger

Top of bentonite seal 60 ft bgs
Bentonite Seal
Type Med chips
Thickness (5 ft min) 5
Volume Placed: 2 bags

Top of filter pack 65 ft bgs 5.5
No.3 Sand Filter Pack
Volume Placed 7 bags (ft^3)
Bottom of filter pack 95 ft bgs

QA/QC: AKS
Date: 6/10/05

ELEVATION DATA

Stake Elevation	52.92
Datum Differential	NA
Adjusted Stake Elevation	52.92
Vertical Offset to Stake	NA
Ground Elevation at Well	52.92
Planned Screen Elevation	-16 to -36
Screen Interval (Depth)	69 to 89
	Adjusted down to 71 to 91

assume DTW @65

SURGE/DEPTH RECORD

TD Inside Well Before Surging	95 (TOC)
Top of Sand Before Surging	65
Surge Time	14 1212 → 1221
Top of Sand After Surging	65
Distance Sand Dropped	0
DTW Inside Well After Surging	69.37 (TOC)
TD Inside Well After Surging	94.3
DTW in borehole after	59.5

2-inch diameter SCH-40 Blank casing

Top of screen 70.5 ft bgs
0.020 - inch Machine Sotted Screen
2-inch diameter, High Flow
SCH - 40 PVC
Screen Length 20 ft
Bottom of Screen 90.5 ft bgs

6-inch long Threaded End Cap
Bottom of Cap 91 ft bgs

Collapsed Native Material

Total Depth of Borehole 95 ft bgs 1100

COMMENTS NOTE

moved location 9' North of projected location to avoid storm drain

HALEY & ALDRICH

Well Construction Record
Parcel C Remediation Well Installation Program
Former Boeing C-6 Site
Los Angeles, California

Well ID: AW0067UB
Start Date/Time: W 6/8/05 13:15
Finish Date/Time: W 6/8/05 1145
Driller/Rig: IGNACIO GUTIERREZ CME-75
Geologist: T. HAMMOND
Amendment Well Stick-up Height (minimum 24-in) 5 inches AGS

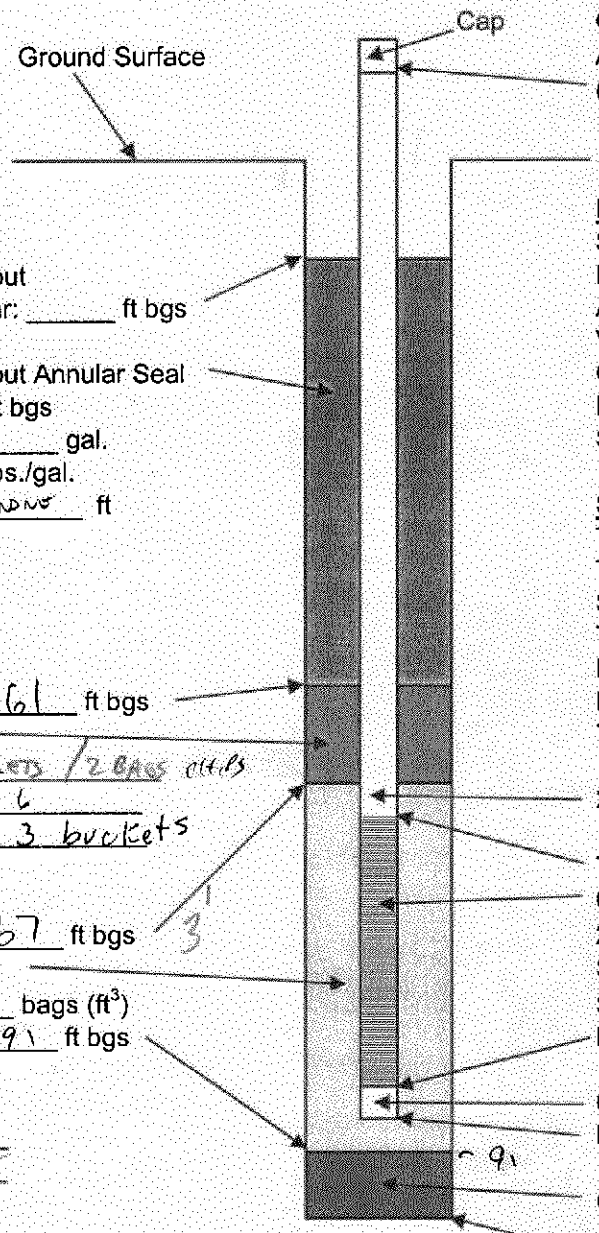

Cement/Bentonite Grout
Top of grout after 24 hr: _____ ft bgs

Cement/Bentonite Grout Annular Seal
Filled to 0 ft bgs
Volume Placed 275 gal.
Density 15 lbs./gal.
Tremie Pipe Length NONE ft

Top of bentonite seal 61 ft bgs
Bentonite Seal
Type 1 BUCKET PELLETS / 2 BAGS CHIPS
Thickness (5 ft min) 6
Volume Placed: 3 buckets

Top of filter pack 67 ft bgs
No.3 Sand Filter Pack
Volume Placed 7 bags (ft^3)
Bottom of filter pack 91 ft bgs

QA/QC: [signature]
Date: 6/10/05

ELEVATION DATA NOT STAKED YET

Stake Elevation	~51.5
Datum Differential	—
Adjusted Stake Elevation	~51.5
Vertical Offset to Stake	—
Ground Elevation at Well	~51.5
Planned Screen Elevation	-16 TO -26
Screen Interval (Depth)	67.5 TO 57.5

ADJUST DOWN 69.89

SURGE/DEPTH RECORD

TD Inside Well Before Surging	NM
Top of Sand Before Surging	66
Surge Time	15 MIN
Top of Sand After Surging	67
Distance Sand Dropped	1'
DTW Inside Well After Surging	70 TOC - 5' STICKUP = 65'
TD Inside Well After Surging	93 TOC

2-inch diameter SCH-40 Blank casing

Top of screen 70 ft bgs
0.020 - inch Machine Sotted Screen
2-inch diameter, High Flow
SCH - 40 PVC
Screen Length 20 ft
Bottom of Screen 90 ft bgs

6-inch long Threaded End Cap
Bottom of Cap 90.5 ft bgs

Collapsed Native Material

Total Depth of Borehole 93 ft bgs

COMMENTS

HALEY & ALDRICH

Well Construction Record
Parcel C Remediation Well Installation Program
Former Boeing C-6 Site
Los Angeles, California

Well ID: AW0075UB
Start Date/Time: W 6/8/05 8:30
Finish Date/Time: W 6/8/05 1245
Driller/Rig: RUBEN LARES CME-95
Geologist: T. HAMAMURA
Amendment Well Stick-up Height (minimum 24-in) 6 inches AGS

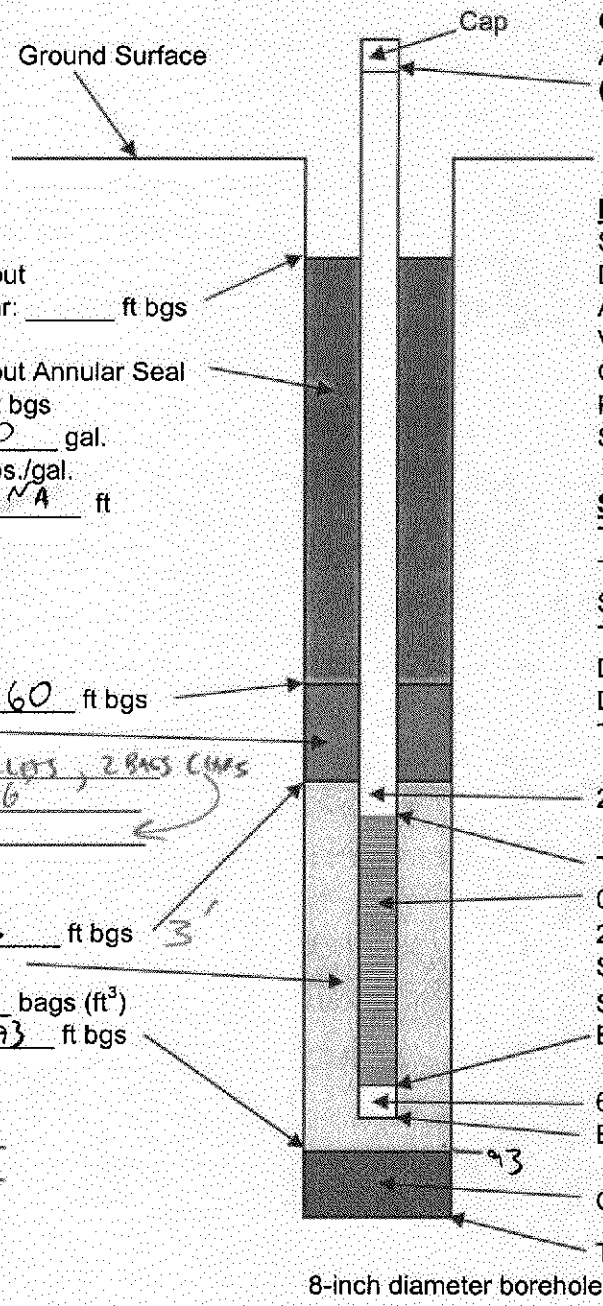

Cement/Bentonite Grout
Top of grout after 24 hr: _____ ft bgs

Cement/Bentonite Grout Annular Seal
Filled to 0 ft bgs
Volume Placed 200 gal.
Density 15 lbs./gal.
Tremie Pipe Length NA ft

Top of bentonite seal 60 ft bgs
Bentonite Seal
Type 1 BUCKET PELLETS, 2 BAGS CHIPS
Thickness (5 ft min) 6
Volume Placed: _____

Top of filter pack 66 ft bgs 3'
No.3 Sand Filter Pack
Volume Placed 7 bags (ft^3)
Bottom of filter pack 93 ft bgs

QA/QC: PRS
Date: 6/10/05

ELEVATION DATA

Stake Elevation	50.79
Datum Differential	—
Adjusted Stake Elevation	50.79
Vertical Offset to Stake	—
Ground Elevation at Well	50.79 ~51
Planned Screen Elevation	-16 to -36
Screen Interval (Depth)	67 to 87
	ADJUST DOWN 69-89'

SURGE/DEPTH RECORD

TD Inside Well Before Surging	NM
Top of Sand Before Surging	66
Surge Time	15 min
Top of Sand After Surging	66.5
Distance Sand Dropped	0.5
DTW Inside Well After Surging	64 - 1 = 63
TD Inside Well After Surging	88.5 TOC

2-inch diameter SCH-40 Blank casing

Top of screen 69 ft bgs
0.020 - inch Machine Sotted Screen
2-inch diameter, High Flow
SCH - 40 PVC
Screen Length 20 ft
Bottom of Screen 89 ft bgs

6-inch long Threaded End Cap
Bottom of Cap 89.5 ft bgs

Collapsed Native Material 2'

Total Depth of Borehole 95 ft bgs

COMMENTS

Haley & Aldrich, Inc.
20040602_Well Construction Record Form VER 3.xls

1 December 2004

HALEY & ALDRICH

Well Construction Record
Parcel C Remediation Well Installation Program
Former Boeing C-6 Site
Los Angeles, California

Well ID: AW 0076UB
Start Date/Time: W 6/8/05 8:00
Finish Date/Time: W 6/8/05 1230
Driller/Rig: IGNACIO GUTIERREZ CM175
Geologist: T. HAMMOND

Amendment Well Stick-up Height (minimum 24-in) 6 inches AGS

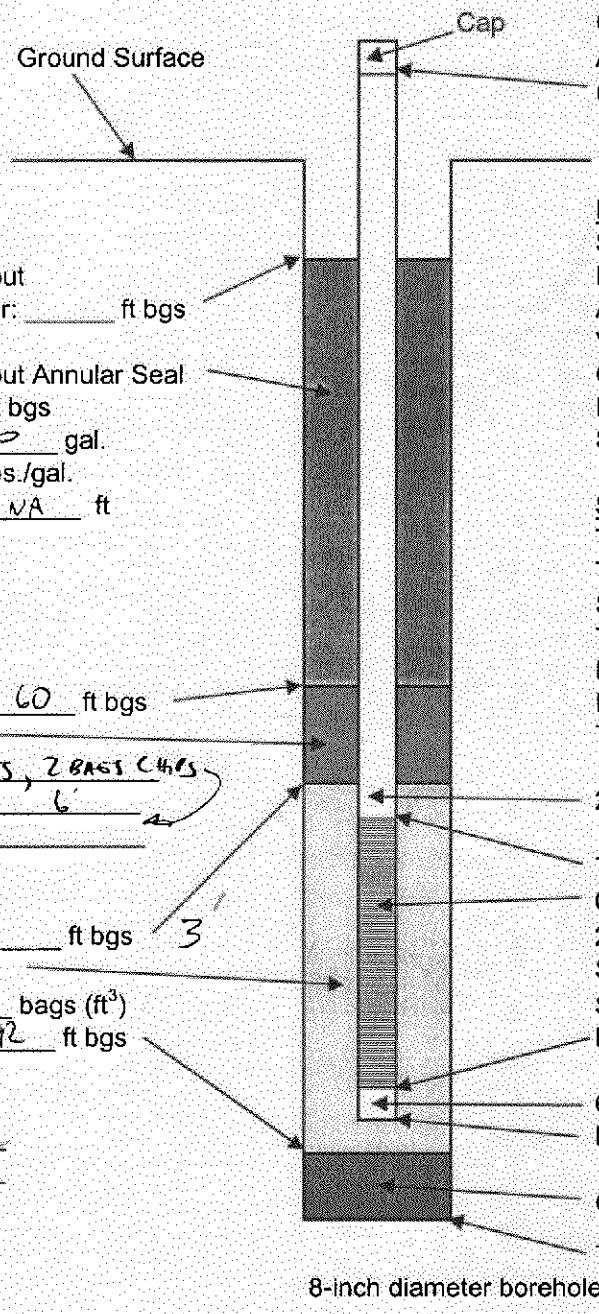

Cement/Bentonite Grout
Top of grout after 24 hr: _____ ft bgs

Cement/Bentonite Grout Annular Seal
Filled to 0 ft bgs
Volume Placed 250 gal.
Density 15 lbs./gal.
Tremie Pipe Length NA ft

Top of bentonite seal 60 ft bgs
Bentonite Seal
Type BUCKET PELLETS, 2 BAGS CHIPS
Thickness (5 ft min) 6'
Volume Placed: _____

Top of filter pack 66 ft bgs 3'
No.3 Sand Filter Pack
Volume Placed 6 bags (ft^3)
Bottom of filter pack 92 ft bgs

QA/QC: [illegible]
Date: 6/10/05

ELEVATION DATA

Stake Elevation	50.84
Datum Differential	—
Adjusted Stake Elevation	50.84
Vertical Offset to Stake	—
Ground Elevation at Well	50.84 - 51
Planned Screen Elevation	-16 TO -36
Screen Interval (Depth)	67 TO 87

DTW @ BIC = 64'
ADJUST DOWN TO 64 - 59

SURGE/DEPTH RECORD

TD Inside Well Before Surging	92 (TOC)
Top of Sand Before Surging	66
Surge Time	15 MIN
Top of Sand After Surging	67
Distance Sand Dropped	1
DTW Inside Well After Surging	69.09 (TOC) - 5 = 64
TD Inside Well After Surging	89 (TOC)

2-inch diameter SCH-40 Blank casing

Top of screen 69 ft bgs
0.020 - inch Machine Sotted Screen
2-inch diameter, High Flow
SCH - 40 PVC
Screen Length 20 ft
Bottom of Screen 89 ft bgs

6-inch long Threaded End Cap
Bottom of Cap 89.5 ft bgs

~~Collapsed Native Material~~ NONE

Total Depth of Borehole 92 ft bgs

COMMENTS

HALEY & ALDRICH

Well Construction Record
Parcel C Remediation Well Installation Program
Former Boeing C-6 Site
Los Angeles, California

Well ID: AW0074UB
Start Date/Time: w 6/8/05 13:40
Finish Date/Time: th 6/9/05 900
Driller/Rig: RUBEN LARES CME-95
Geologist: T. HAMMOND

Amendment Well Stick-up Height (minimum 24-in) 5' inches AGS

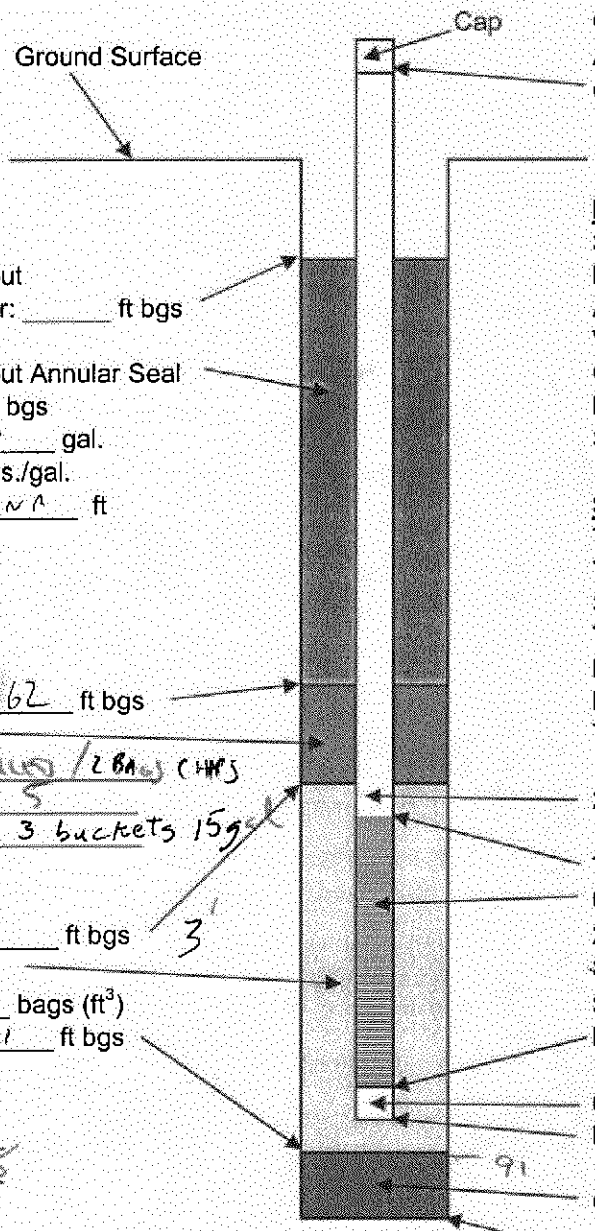

Cement/Bentonite Grout
Top of grout after 24 hr: _____ ft bgs

Cement/Bentonite Grout Annular Seal
Filled to 4 ft bgs
Volume Placed 200 gal.
Density 15 lbs./gal.
Tremie Pipe Length NA ft

Top of bentonite seal 62 ft bgs
Bentonite Seal
Type 1 Bucket Pelled / 2 Bags Chips
Thickness (5 ft min) 5
Volume Placed: 3 buckets 15 gal

Top of filter pack 67 ft bgs 3'
No.3 Sand Filter Pack
Volume Placed 7 bags (ft^3)
Bottom of filter pack 91 ft bgs

QA/QC: PRS
Date: 6/10/05

8-inch diameter borehole

ELEVATION DATA

STAKED IN A STOCKPILE THAT WAS MOVED TO DRILL

Stake Elevation	~51.5
Datum Differential	—
Adjusted Stake Elevation	~51.5
Vertical Offset to Stake	—
Ground Elevation at Well	~51.5
Planned Screen Elevation	-16 TO -36
Screen Interval (Depth)	67.5 TO 87.5

DTW @ 83C = 63'
ADJUST DOWN TO -90'

SURGE/DEPTH RECORD

TD Inside Well Before Surging	87.3'
Top of Sand Before Surging	67
Surge Time	15 min
Top of Sand After Surging	69
Distance Sand Dropped	2
DTW Inside Well After Surging	63.7 BGS
TD Inside Well After Surging	87' BGS

2-inch diameter SCH-40 Blank casing

Top of screen 70 ft bgs
0.020 - inch Machine Sotted Screen
2-inch diameter, High Flow
SCH - 40 PVC
Screen Length 20 ft
Bottom of Screen 90 ft bgs

6-inch long Threaded End Cap
Bottom of Cap 90.5 ft bgs

Collapsed Native Material

Total Depth of Borehole 95 ft bgs 15:00

COMMENTS

Haley & Aldrich, Inc.
20040602_Well Construction Record Form VER 3.xls

1 December 2004

HALEY & ALDRICH

Well Construction Record
Parcel C Remediation Well Installation Program
Former Boeing C-6 Site
Los Angeles, California

Well ID: AW0084C
Start Date/Time: 6-8-05 / 1320
Finish Date/Time: 6/9/05 945
Driller/Rig: WDC/CME85/Paul Almanza
Geologist: G Androsko

Amendment Well Stick-up Height (minimum 24-in) 4' inches AGS

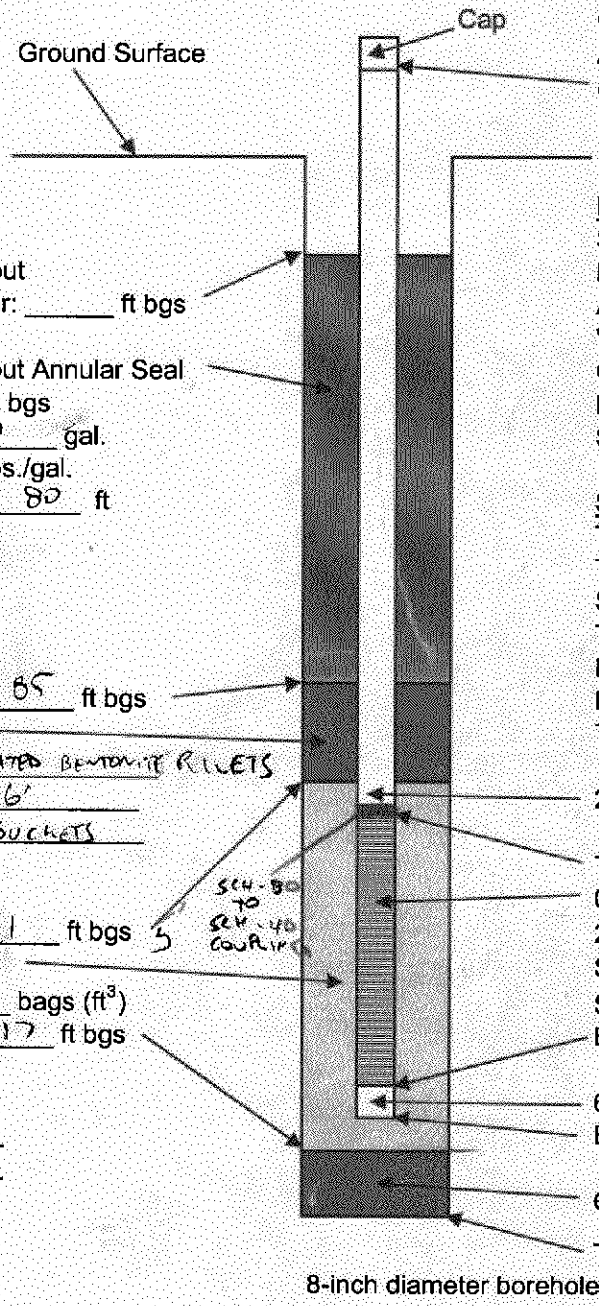

Cement/Bentonite Grout
Top of grout after 24 hr: _____ ft bgs

Cement/Bentonite Grout Annular Seal
Filled to 10 ft bgs
Volume Placed 350 gal.
Density 15 lbs./gal.
Tremie Pipe Length 80 ft

Top of bentonite seal 85 ft bgs
Bentonite Seal
Type 1/4" TR-30 COATED BENTONITE PELLETS
Thickness (5 ft min) 6'
Volume Placed: 3 BUCKETS

MN 111
Top of filter pack 91 ft bgs
No.3 Sand Filter Pack
Volume Placed 8 1/2 bags (ft³)
Bottom of filter pack 117 ft bgs

QA/QC: [signature]
Date: 6/10/05

ELEVATION DATA

Stake Elevation	50.29
Datum Differential	NA
Adjusted Stake Elevation	50.29
Vertical Offset to Stake	–
Ground Elevation at Well	50.29
Planned Screen Elevation	-45 to -65
Screen Interval (Depth)	95 to 115

SURGE/DEPTH RECORD

TD Inside Well Before Surging	113.5 BGS
Top of Sand Before Surging	92
Surge Time	15 min
Top of Sand After Surging	91
Distance Sand Dropped	+1
DTW Inside Well After Surging	—
TD Inside Well After Surging	118.3 TOC

DTW inside borehole after

2-inch diameter SCH-40 Blank casing

Top of screen 96 ft bgs
0.020 - inch Machine Sotted Screen
2-inch diameter, High Flow
SCH - 80 PVC
Screen Length 20 ft
Bottom of Screen 116 ft bgs

6-inch long Threaded End Cap
Bottom of Cap 116.5 ft bgs

~~Collapsed Native Material~~ none

Total Depth of Borehole 117 ft bgs 1435

8-inch diameter borehole

COMMENTS

Haley & Aldrich, Inc.
20040602_Well Construction Record Form VER 3.xls

1 December 2004

HALEY & ALDRICH

Well Construction Record
Parcel C Remediation Well Installation Program
Former Boeing C-6 Site
Los Angeles, California

Well ID: AW0073C
Start Date/Time: 6-8-05 / 1410
Finish Date/Time: 6/9/05 1230
Driller/Rig: WDC/CME 75/Miguel
Geologist: G. Androsko
Amendment Well Stick-up Height (minimum 24-in) 4" inches AGS

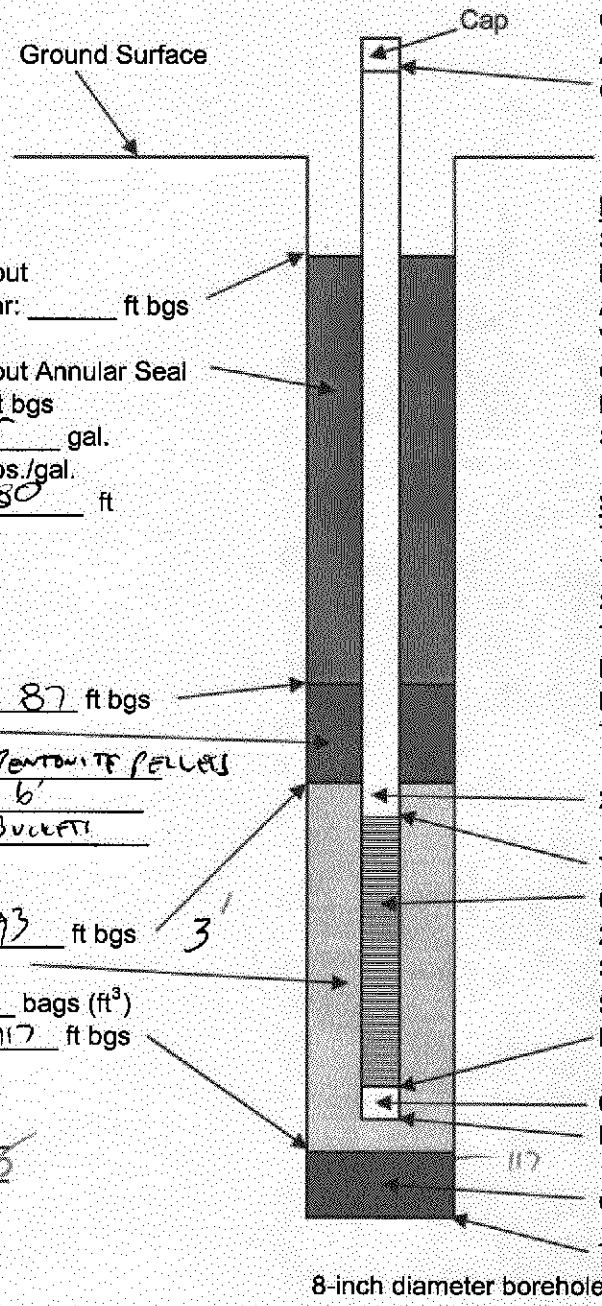

Cement/Bentonite Grout
Top of grout after 24 hr: _____ ft bgs

Cement/Bentonite Grout Annular Seal
Filled to 6 ft bgs
Volume Placed 325 gal.
Density 15 lbs./gal.
Tremie Pipe Length 80 ft

Top of bentonite seal 87 ft bgs
Bentonite Seal
Type 1/4 TR-30 BENTONITE PELLETS
Thickness (5 ft min) 6'
Volume Placed: 3 BUCKETS

Top of filter pack 93 ft bgs 3'
No.3 Sand Filter Pack
Volume Placed 8 bags (ft^3)
Bottom of filter pack 117 ft bgs

QA/QC: PRO
Date: 6/10/05

ELEVATION DATA

Stake Elevation	50.85
Datum Differential	NA
Adjusted Stake Elevation	50.85
Vertical Offset to Stake	—
Ground Elevation at Well	50.85
Planned Screen Elevation	-45 to -65
Screen Interval (Depth)	95.8 to 115.8

SURGE/DEPTH RECORD

TD Inside Well Before Surging	115 (TOC) -4' = 111' BGS
Top of Sand Before Surging	93
Surge Time	15 min
Top of Sand After Surging	93.5
Distance Sand Dropped	0.5
DTW Inside Well After Surging	—
TD Inside Well After Surging	115' TOC

2-inch diameter SCH-40 Blank casing

Top of screen 96 ft bgs
0.020 - inch Machine Sotted Screen
2-inch diameter, High Flow
SCH - 80 PVC
Screen Length 20 ft
Bottom of Screen 116 ft bgs

6-inch long Threaded End Cap
Bottom of Cap 116.5 ft bgs

Collapsed Native Material

Total Depth of Borehole 120 ft bgs

COMMENTS

1500 Stopped @ 65' (water level?) - will complete tomorrow (6/9)

HALEY & ALDRICH

Well Construction Record
Parcel C Remediation Well Installation Program
Former Boeing C-6 Site
Los Angeles, California

Well ID: AM0056UB
Start Date/Time: Th 6/8/05 1030
Finish Date/Time: Th 6/9/05 1430
Driller/Rig: PAUL ALMANZA CME-85
Geologist: T. HAMMOND
Amendment Well Stick-up Height (minimum 24-in) 5' inches AGS

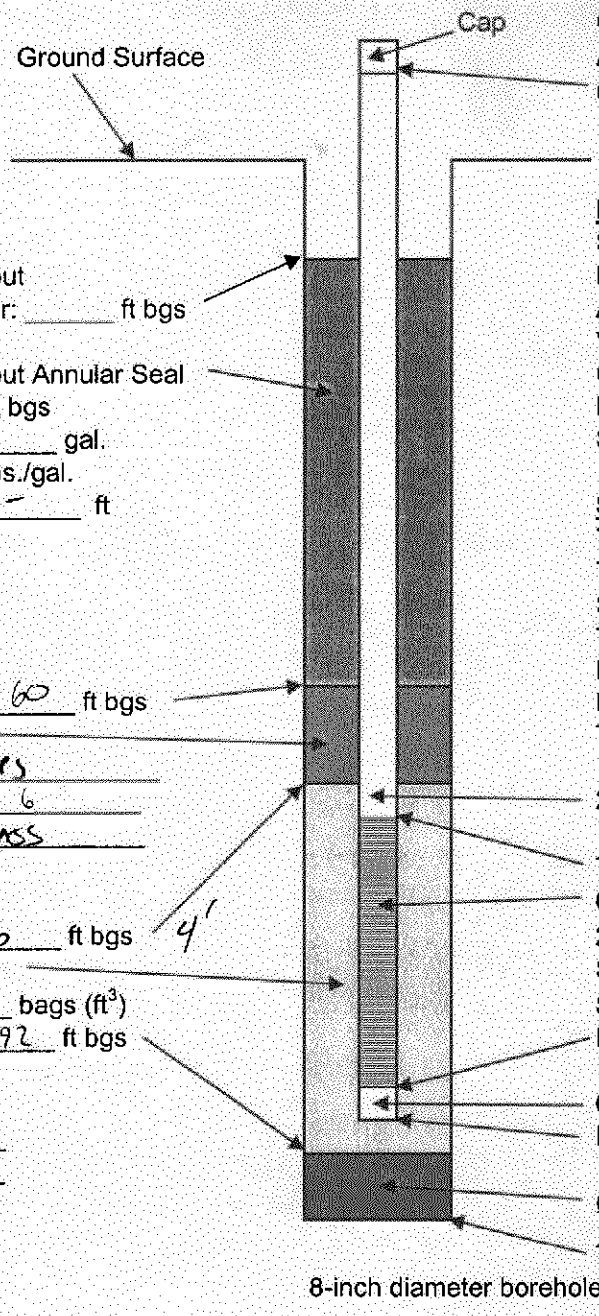

Cement/Bentonite Grout
Top of grout after 24 hr: _____ ft bgs

Cement/Bentonite Grout Annular Seal
Filled to 0 ft bgs
Volume Placed 171 gal.
Density 15 lbs./gal.
Tremie Pipe Length – ft

Top of bentonite seal 60 ft bgs
Bentonite Seal
Type MED. CHIPS
Thickness (5 ft min) 6
Volume Placed: 3 BAGS

Top of filter pack 66 ft bgs 4'
No.3 Sand Filter Pack
Volume Placed 7 bags (ft^3)
Bottom of filter pack 92 ft bgs

QA/QC: [signature]
Date: 6/10/05

ELEVATION DATA

Stake Elevation	NOT STAKED
Datum Differential	—
Adjusted Stake Elevation	~51.5
Vertical Offset to Stake	—
Ground Elevation at Well	51.5
Planned Screen Elevation	-6 to -36
Screen Interval (Depth)	67.5 - 97.5
	ADJUST DOWN 69-99

SURGE/DEPTH RECORD

TD Inside Well Before Surging	88 bgs
Top of Sand Before Surging	67
Surge Time	15 min
Top of Sand After Surging	70
Distance Sand Dropped	3'
DTW Inside Well After Surging	NM
TD Inside Well After Surging	87.3 bgs

2-inch diameter SCH-40 Blank casing

Top of screen 70 ft bgs
0.020 - inch Machine Sotted Screen
2-inch diameter, High Flow
SCH - 40 PVC
Screen Length 20 ft
Bottom of Screen 90 ft bgs

6-inch long Threaded End Cap
Bottom of Cap 90.5 ft bgs

~~Collapsed Native Material~~ none

Total Depth of Borehole 92 ft bgs

COMMENTS

HALEY & ALDRICH

Well Construction Record
Parcel C Remediation Well Installation Program
Former Boeing C-6 Site
Los Angeles, California

Well ID: AW 0046B
Start Date/Time: Th 6/9/05 930
Finish Date/Time: Th 6/9/05 1400
Driller/Rig: Robert Lacks CME-95
Geologist: T. Hammond
Amendment Well Stick-up Height (minimum 24-in) _____ inches AGS

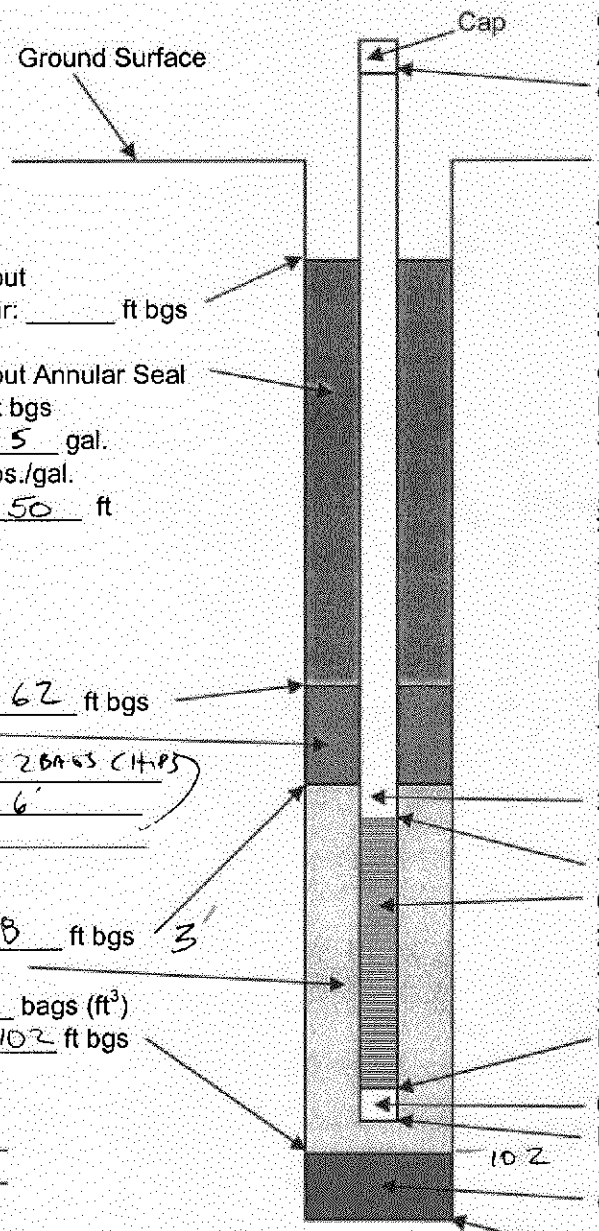

Cement/Bentonite Grout
Top of grout after 24 hr: _____ ft bgs

Cement/Bentonite Grout Annular Seal
Filled to 3 ft bgs
Volume Placed 225 gal.
Density 15 lbs./gal.
Tremie Pipe Length 50 ft

Top of bentonite seal 62 ft bgs
Bentonite Seal
Type 1 bucket pellets - 2 bags chips
Thickness (5 ft min) 6'
Volume Placed: _____

Top of filter pack 68 ft bgs 3'
No.3 Sand Filter Pack
Volume Placed 9 bags (ft^3)
Bottom of filter pack 102 ft bgs

QA/QC: RBS
Date: 6/10/05

ELEVATION DATA

Stake Elevation	NOT STAKED YET
Datum Differential	—
Adjusted Stake Elevation	
Vertical Offset to Stake	
Ground Elevation at Well	~51.5
Planned Screen Elevation	-16 to -46
Screen Interval (Depth)	67.5 - 97.5

SURGE/DEPTH RECORD

TD Inside Well Before Surging	About down ~69-99 to H_2O
Top of Sand Before Surging	67 - well developed w/ surging surge
Surge Time	15 min
Top of Sand After Surging	68
Distance Sand Dropped	1'
DTW Inside Well After Surging	~4' H_2O
TD Inside Well After Surging	96.5

2-inch diameter SCH-40 Blank casing

Top of screen 71 ft bgs
0.020 - inch Machine Sotted Screen
2-inch diameter, High Flow
SCH - 40 PVC
Screen Length 30 ft
Bottom of Screen 101 ft bgs

6-inch long Threaded End Cap
Bottom of Cap 101.5 ft bgs

Collapsed Native Material

Total Depth of Borehole 105 ft bgs

COMMENTS

Haley & Aldrich, Inc.
20040602_Well Construction Record Form VER 3.xls

1 December 2004

HALEY & ALDRICH

Well Construction Record
Parcel C Remediation Well Installation Program
Former Boeing C-6 Site
Los Angeles, California

Well ID: AW0066UB
Start Date/Time: TU 6/14/05 8:00
Finish Date/Time: TU 6/14/05 12:30
Driller/Rig: TED NICHOLS CME-85
Geologist: T. HAMMOND

Amendment Well Stick-up Height (minimum 24-in) 5.5' inches AGS

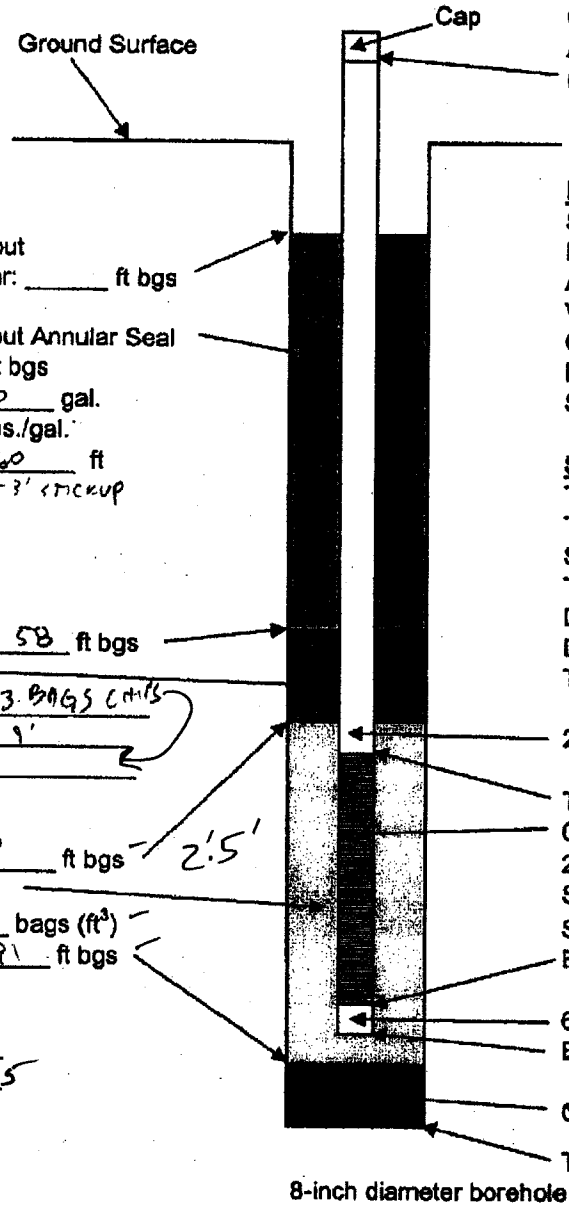

Cement/Bentonite Grout
Top of grout after 24 hr: _____ ft bgs

Cement/Bentonite Grout Annular Seal
Filled to 4 ft bgs
Volume Placed 200 gal.
Density 15 lbs./gal.
Tremie Pipe Length 60 ft
-3' stickup

Top of bentonite seal 58 ft bgs
Bentonite Seal
Type 1 BUCKET / 3 BAGS CHIPS
Thickness (5 ft min) 9'
Volume Placed: _____

Top of filter pack 67 ft bgs
No.3 Sand Filter Pack
Volume Placed 7 bags (ft³)
Bottom of filter pack 91 ft bgs

QA/QC: PRS
Date: 6/15/05

ELEVATION DATA

Stake Elevation	~51
Datum Differential	—
Adjusted Stake Elevation	~51
Vertical Offset to Stake	—
Ground Elevation at Well	~51
Planned Screen Elevation	-16 TO -36
Screen Interval (Depth)	67 TO 87

DTW ~ 64' +2 +3 = 69 (SEAL SAND TORCH)
ADJUST DOWN 70-90

SURGE/DEPTH RECORD

TD Inside Well Before Surging	89.4 (TOC)
Top of Sand Before Surging	67.5
Surge Time	15 MIN
Top of Sand After Surging	68.4
Distance Sand Dropped	1'
DTW Inside Well After Surging	~64'
TD Inside Well After Surging	89 (TOC)

2-inch diameter SCH-40 Blank casing

Top of screen 69.5 ft bgs
0.020 - inch Machine Sotted Screen
2-inch diameter, High Flow
SCH - 40 PVC
Screen Length 20 ft
Bottom of Screen 89.5 ft bgs

6-inch long Threaded End Cap
Bottom of Cap 90 ft bgs

~~Collapsed Native Material~~ NONE

Total Depth of Borehole 91 ft bgs

8-inch diameter borehole

COMMENTS

Haley & Aldrich, Inc.
20040602_Well Construction Record Form VER 3.xls

1 December 2004

HALEY & ALDRICH

Well Construction Record
Parcel C Remediation Well Installation Program
Former Boeing C-6 Site
Los Angeles, California

Well ID: AW0105 C
Start Date/Time: TU 6/14/05 14:00
Finish Date/Time: W 6/15/05 1345
Driller/Rig: TED NICKOLS CME-85
Geologist: T. Hammond
Amendment Well Stick-up Height (minimum 24-in) 34 inches AGS

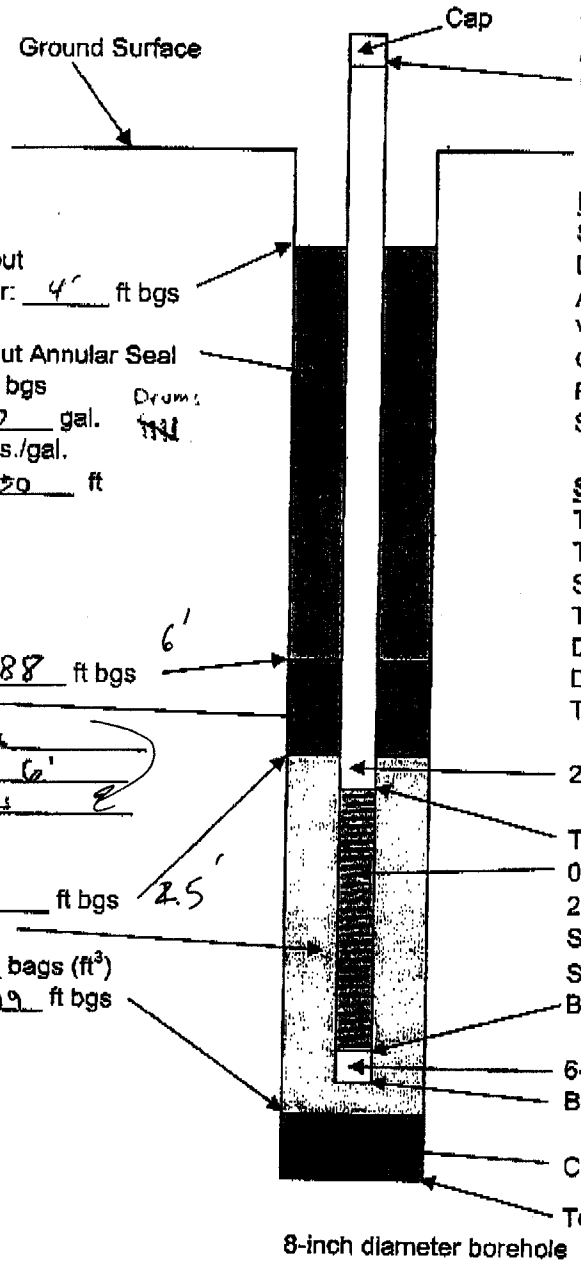

Cement/Bentonite Grout
Top of grout after 24 hr: 4' ft bgs

Cement/Bentonite Grout Annular Seal
Filled to 3 ft bgs
Volume Placed 250 gal. Drums
Density 15 lbs./gal.
Tremie Pipe Length 50 ft

Top of bentonite seal 88 ft bgs
Bentonite Seal
Type 1/4" Coated Pellets
Thickness (5 ft min) 6'
Volume Placed: 3 Bkts

Top of filter pack 94 ft bgs
No.3 Sand Filter Pack
Volume Placed 6 bags (ft³)
Bottom of filter pack 119 ft bgs

2-inch diameter SCH-40 Blank casing
Top of screen 96.5 ft bgs
0.020 - inch Machine Sotted Screen
2-inch diameter, High Flow
SCH - 80 PVC
Screen Length 20 ft
Bottom of Screen 116.5 ft bgs
6-inch long Threaded End Cap
Bottom of Cap 117 ft bgs
Collapsed Native Material
Total Depth of Borehole 119 ft bgs

QA/QC: [illegible]
Date: 6/17/05

ELEVATION DATA

Stake Elevation	~51
Datum Differential	—
Adjusted Stake Elevation	~51
Vertical Offset to Stake	—
Ground Elevation at Well	~51
Planned Screen Elevation	~45 to ~65
Screen Interval (Depth)	96 to 116'

STAKE MISSING AT SYE → 50.29+1

SURGE/DEPTH RECORD

TD Inside Well Before Surging	115.2 (1.8' silt/sand in well)
Top of Sand Before Surging	92
Surge Time	~15 min 1032 → 1055
Top of Sand After Surging	94
Distance Sand Dropped	2
DTW Inside Well After Surging	66.29
TD Inside Well After Surging	115.2

COMMENTS

Haley & Aldrich, Inc.
20040602_Well Construction Record Form VER 3.xls

1 December 2004

HALEY & ALDRICH

Well Construction Record
Parcel C Remediation Well Installation Program
Former Boeing C-6 Site
Los Angeles, California

Well ID: AW0096UB
Start Date/Time: 6-15-05/1305
Finish Date/Time: 6-15-05/1600
Driller/Rig: WDC/CME 75/Miguel
Geologist: G. Andrioska

Amendment Well Stick-up Height (minimum 24-in) 58 inches AGS

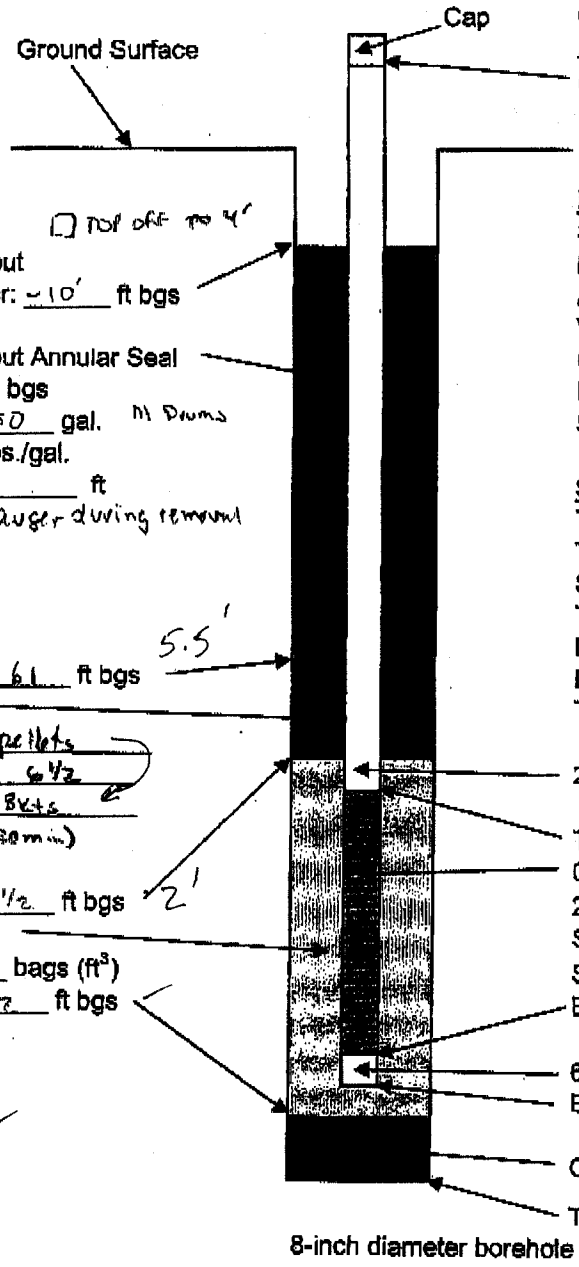

☐ Top off to 4'

Cement/Bentonite Grout
Top of grout after 24 hr: ~10' ft bgs

Cement/Bentonite Grout Annular Seal
Filled to 4 ft bgs
Volume Placed 150 gal. M Drums
Density 15 lbs./gal.
Tremie Pipe Length _____ ft
↳ used center of auger during removal

5.5'

Top of bentonite seal 61 ft bgs
Bentonite Seal
Type 1/4" coated pellets
Thickness (5 ft min) 6 1/2
Volume Placed: 3 Bkts
(hydrated 30 min)

MN 1
Top of filter pack 67 1/2 ft bgs 2'
No.3 Sand Filter Pack
Volume Placed 8 bags (ft³)
Bottom of filter pack 92 ft bgs

QA/QC: [signature]
Date: 6/16/05

8-inch diameter borehole

ELEVATION DATA

Stake Elevation	51.02
Datum Differential	NA
Adjusted Stake Elevation	51.02
Vertical Offset to Stake	NA
Ground Elevation at Well	51.02
Planned Screen Elevation	-16 to -36
Screen Interval (Depth)	67 to 87

Adjusted down to 70 to 90'

SURGE/DEPTH RECORD

TD Inside Well Before Surging	~90
Top of Sand Before Surging	67 1/2
Surge Time	15 min
Top of Sand After Surging	69 1/2
Distance Sand Dropped	2
DTW Inside Well After Surging	68.17
TD Inside Well After Surging	90

2-inch diameter SCH-40 Blank casing

Top of screen 69.5 ft bgs
0.020 - inch Machine Sotted Screen
2-inch diameter, High Flow
SCH - 40 PVC
Screen Length 20 ft
Bottom of Screen 89.5 ft bgs

6-inch long Threaded End Cap
Bottom of Cap 90 ft bgs

Collapsed Native Material

Total Depth of Borehole 92.5 ft bgs @1400

COMMENTS

Haley & Aldrich, Inc.
20040602_Well Construction Record Form VER 3.xls

1 December 2004

HALEY & ALDRICH

Well Construction Record
Parcel C Remediation Well Installation Program
Former Boeing C-6 Site
Los Angeles, California

Well ID: AW0085C
Start Date/Time: W 6/15/05 8:30
Finish Date/Time: TH 6/16/05 13:40
Driller/Rig: PAUL ALMANZA CME-55
Geologist: T. HAMMOND

Amendment Well Stick-up Height (minimum 24-in) 3.5' inches AGS

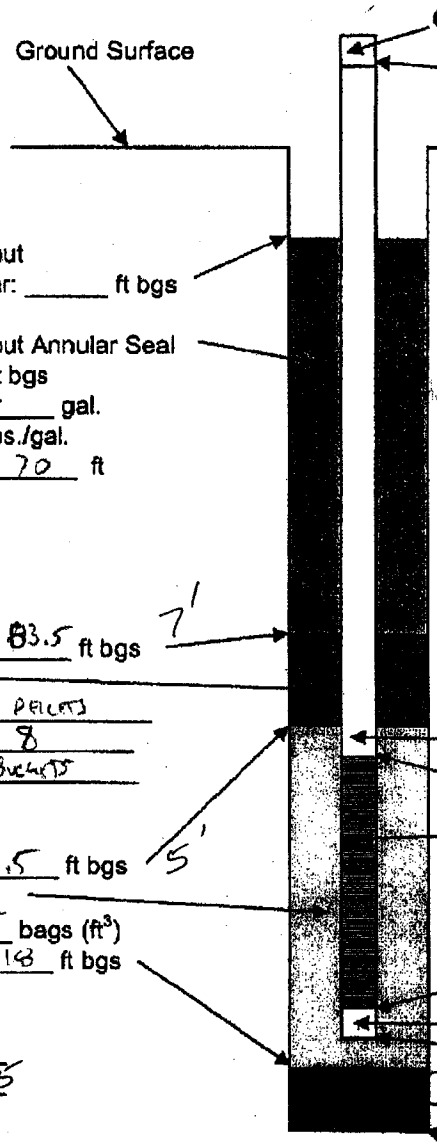

Cement/Bentonite Grout
Top of grout after 24 hr: _____ ft bgs

Cement/Bentonite Grout Annular Seal
Filled to 1 ft bgs
Volume Placed 300 gal.
Density 15 lbs./gal.
Tremie Pipe Length 70 ft

Top of bentonite seal 83.5 ft bgs
Bentonite Seal
Type 1/4" TR-30 PELLETS
Thickness (5 ft min) 8
Volume Placed: 3 BUCKETS

Top of filter pack 91.5 ft bgs
No.3 Sand Filter Pack
Volume Placed 3.5 bags (ft^3)
Bottom of filter pack 118 ft bgs

QA/QC: [illegible]
Date: 6/17/05

ELEVATION DATA

Stake Elevation	50.91
Datum Differential	—
Adjusted Stake Elevation	50.91
Vertical Offset to Stake	—
Ground Elevation at Well	50.91 ≈ 51
Planned Screen Elevation	-45 to -65
Screen Interval (Depth)	96 to 116

SURGE/DEPTH RECORD

TD Inside Well Before Surging	118' (TOC)
Top of Sand Before Surging	94
Surge Time	15 min
Top of Sand After Surging	96
Distance Sand Dropped	2
DTW Inside Well After Surging	—
TD Inside Well After Surging	119 (TOC)

2-inch diameter SCH-40 Blank casing

Top of screen 96.5 ft bgs
0.020 - inch Machine Sotted Screen
2-inch diameter, High Flow
SCH - 80 PVC
Screen Length 20 ft
Bottom of Screen 116.5 ft bgs

6-inch long Threaded End Cap
Bottom of Cap 117 ft bgs

Collapsed Native Material 118-122

Total Depth of Borehole 122 ft bgs

8-inch diameter borehole

COMMENTS

BENTONITE PELLETS BRIDGED & WE COULD NOT KNOCK THEM OUT ON W 6/15/05. PULLED AUGERS, INSTALLED NEW PLUG & RE-INSTALL IN SAME BOREHOLE

HALEY & ALDRICH

Well Construction Record
Parcel C Remediation Well Installation Program
Former Boeing C-6 Site
Los Angeles, California

Well ID: AW00632
Start Date/Time: 6-16-05/ 1150
Finish Date/Time: Th 6/16/05 16:15
Driller/Rig: WDC/CME 75/Jorge G. Tigal
Geologist: G. Androska

Amendment Well Stick-up Height (minimum 24-in) _____ inches AGS

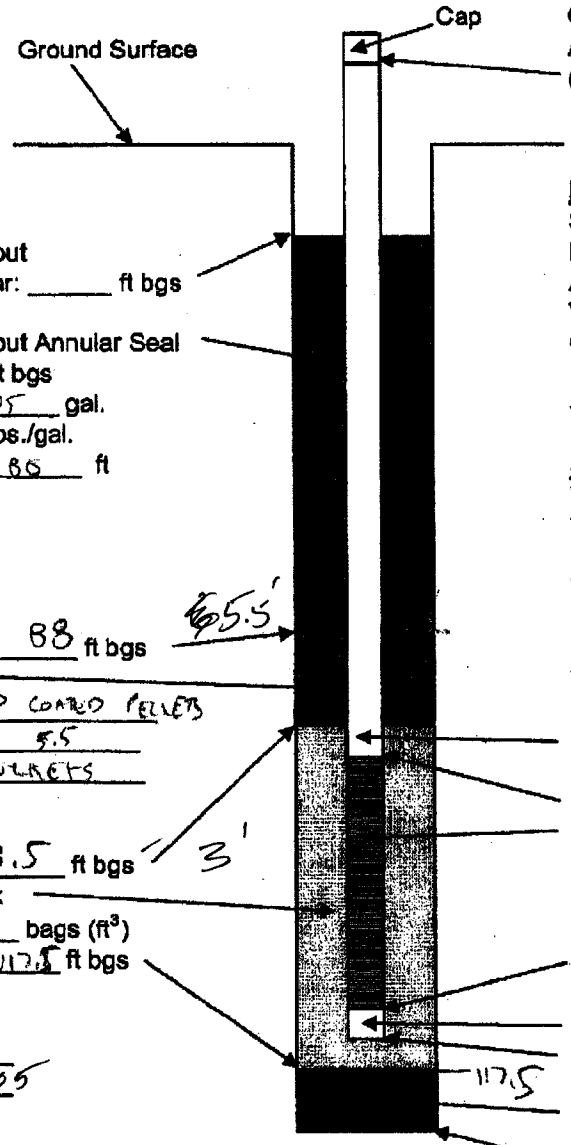

Cement/Bentonite Grout
Top of grout after 24 hr: _____ ft bgs

Cement/Bentonite Grout Annular Seal
Filled to 0 ft bgs
5x50 Volume Placed 475 gal.
Density 15 lbs./gal.
Tremie Pipe Length 80 ft

Top of bentonite seal 88 ft bgs
Bentonite Seal
Type 1/4" TR-30 COATED PELLETS
Thickness (5 ft min) 5.5
Volume Placed: 3 BUCKETS

Top of filter pack 93.5 ft bgs
No.3 Sand Filter Pack
Volume Placed 9 bags (ft³)
Bottom of filter pack 117.5 ft bgs

ELEVATION DATA

Stake Elevation	50.71
Datum Differential	NA
Adjusted Stake Elevation	50.71
Vertical Offset to Stake	NA
Ground Elevation at Well	50.71
Planned Screen Elevation	-45 to -65
Screen Interval (Depth)	95.5 to 115.5

Assume DTW @ 63

SURGE/DEPTH RECORD

TD Inside Well Before Surging	118.5
Top of Sand Before Surging	93
Surge Time	15 min
Top of Sand After Surging	94
Distance Sand Dropped	1
DTW Inside Well After Surging	—
TD Inside Well After Surging	117.5

2-inch diameter SCH-40 Blank casing

Top of screen 96.5 ft bgs
0.020 - inch Machine Sotted Screen
2-inch diameter, High Flow
SCH - 80 PVC
Screen Length 20 ft
Bottom of Screen 116.5 ft bgs

6-inch long Threaded End Cap
Bottom of Cap 117 ft bgs

Collapsed Native Material

Total Depth of Borehole 120 ft bgs @ 1300

8-inch diameter borehole

QA/QC: [signature]
Date: 6/17/05

COMMENTS

Haley & Aldrich, Inc.
20040802_Well Construction Record Form VER 3.xls

1 December 2004

HALEY & ALDRICH

Well Construction Record
Parcel C Remediation Well Installation Program
Former Boeing C-6 Site
Los Angeles, California

Well ID: AW0094C
Start Date/Time: 6-15-05/1425
Finish Date/Time: 6-16-05/1355
Driller/Rig: WDC/CME 85/Tech Nicho
Geologist: G. Androsko

Amendment Well Stick-up Height (minimum 24-in) 36 inches AGS

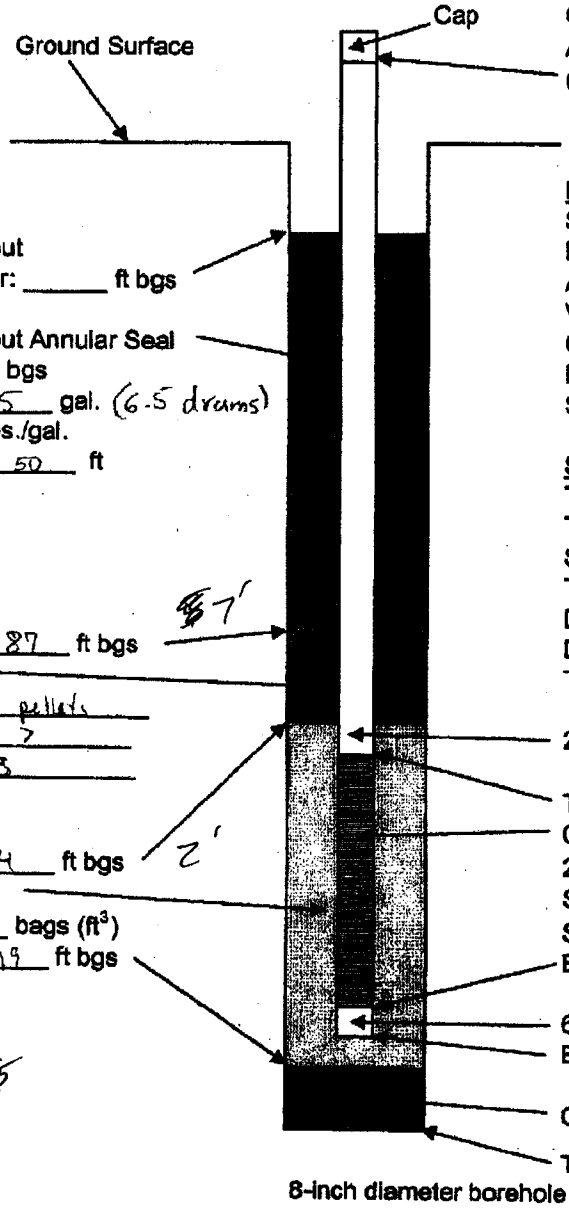

Cement/Bentonite Grout
Top of grout after 24 hr: _____ ft bgs

Cement/Bentonite Grout Annular Seal
Filled to 0 ft bgs
Volume Placed 325 gal. (6.5 drums)
Density 15 lbs./gal.
Tremie Pipe Length 50 ft

Top of bentonite seal 87 ft bgs
Bentonite Seal
Type 1/4" Coated pellets
Thickness (5 ft min) 7
Volume Placed: 3

Top of filter pack 94 ft bgs
No.3 Sand Filter Pack
Volume Placed 7 bags (ft^3)
Bottom of filter pack 119 ft bgs

QA/QC: PB
Date: 6/17/05

ELEVATION DATA

Stake Elevation	51.36
Datum Differential	NA
Adjusted Stake Elevation	51.36
Vertical Offset to Stake	NA
Ground Elevation at Well	51.36
Planned Screen Elevation	-45 to 65
Screen Interval (Depth)	96 to 116

SURGE/DEPTH RECORD

TD Inside Well Before Surging	116.5
Top of Sand Before Surging	94
Surge Time	10 min 0941 -> 951
Top of Sand After Surging	96
Distance Sand Dropped	2
DTW Inside Well After Surging	66.74
TD Inside Well After Surging	116.5

2-inch diameter SCH-40 Blank casing

Top of screen 96 ft bgs
0.020 - inch Machine Sotted Screen
2-inch diameter, High Flow
SCH - 80 PVC
Screen Length 20 ft
Bottom of Screen 116.5 ft bgs

6-inch long Threaded End Cap
Bottom of Cap 118.8 ft bgs

Collapsed Native Material

Total Depth of Borehole 119 ft bgs 6/16 0815

8-inch diameter borehole

COMMENTS

6-15-05 @ 1555: Stopped drilling @ 70' - will continue to TD tomorrow

6

HALEY & ALDRICH

Well Construction Record
Parcel C Remediation Well Installation Program
Former Boeing C-6 Site
Los Angeles, California

Well ID: AW 0055C
Start Date/Time: TU 6/14/05 8:15
Finish Date/Time: F 6/17/05 9:30
Driller/Rig: PAUL ALMANZA CME-8
Geologist: T. HAMMOND

Amendment Well Stick-up Height (minimum 24-in) _____ inches AGS

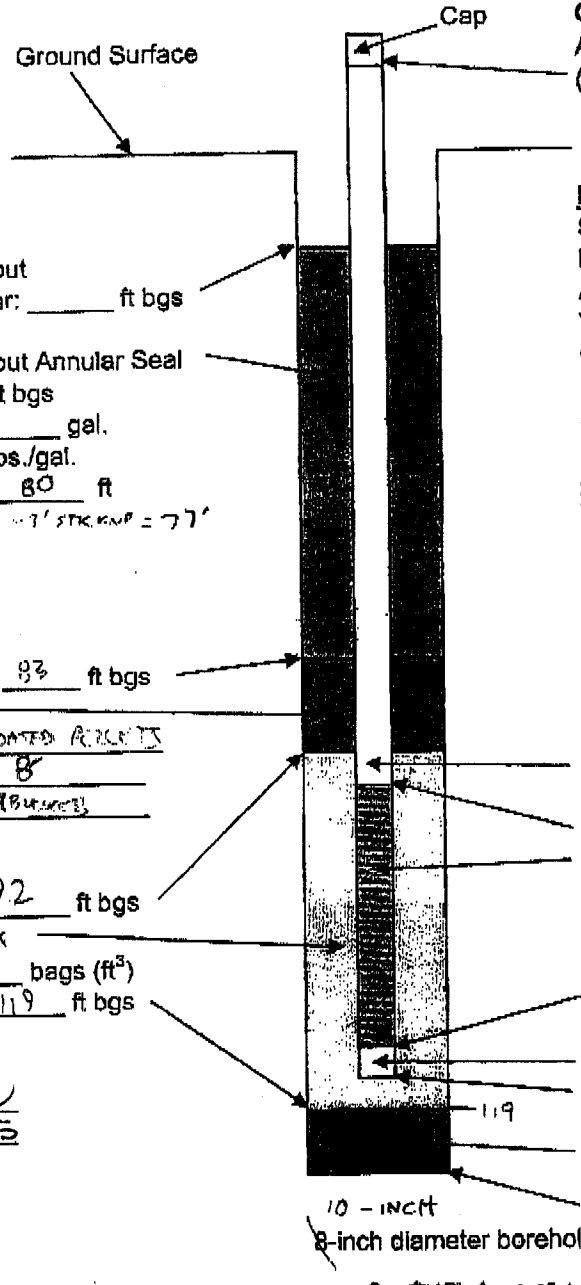

Cement/Bentonite Grout
Top of grout after 24 hr: _____ ft bgs

Cement/Bentonite Grout Annular Seal
Filled to 0' ft bgs
Volume Placed 450 gal.
Density 15 lbs./gal.
Tremie Pipe Length 80 ft
~3' STICKUP = 77'

Top of bentonite seal 83 ft bgs
Bentonite Seal
Type 1/4 TR 30 COATED PELLETS
Thickness (5 ft min) 8
Volume Placed: 4 BUCKETS

Top of filter pack 92 ft bgs
No.3 Sand Filter Pack
Volume Placed 15 bags (ft³)
Bottom of filter pack 119 ft bgs

ELEVATION DATA

Stake Elevation	~51.19
Datum Differential	—
Adjusted Stake Elevation	~51.19
Vertical Offset to Stake	—
Ground Elevation at Well	~51.19
Planned Screen Elevation	-45 TO -65
Screen Interval (Depth)	96 TO 116

SURGE/DEPTH RECORD

TD Inside Well Before Surging	119 TOC
Top of Sand Before Surging	93
Surge Time	15 MIN
Top of Sand After Surging	95
Distance Sand Dropped	2
DTW Inside Well After Surging	—
TD Inside Well After Surging	120'

2-inch diameter SCH-40 Blank casing

Top of screen 97 ft bgs
0.020 - Inch Machine Sotted Screen
2-inch diameter, High Flow
SCH - 80 PVC
Screen Length 20 ft
Bottom of Screen 117 ft bgs

6-inch long Threaded End Cap
Bottom of Cap 117.5 ft bgs

Collapsed Native Material 119-123

Total Depth of Borehole 123 ft bgs
TD @ 6/16/05 16:00

QA/QC: [signature]
Date: 6/21/05

COMMENTS

BENTONITE PELLETS BRIDGED INSIDE OF THE AUGERS. PULLED OUT & RE INSTALL. PELLETS BRIDGED AGAIN. PULL OUT & ALLOW HOLE TO SETTLE A COUPLE OF DAYS. WE WILL RE-INSTALL WITH 10" AUGERS IN THE SAME BOREHOLE START 6/16/05 14:00

HALEY & ALDRICH

Well Construction Record
Parcel C Remediation Well Installation Program
Former Boeing C-6 Site
Los Angeles, California

Well ID: AW0054C
Start Date/Time: 06/16/05 @ 1415
Finish Date/Time: 6-17-05 @ 0940
Driller/Rig: WDC/CME85/TED
Geologist: R. Ramzi/MQ. Nichols

Amendment Well Stick-up Height (minimum 24-in) 51 inches AGS

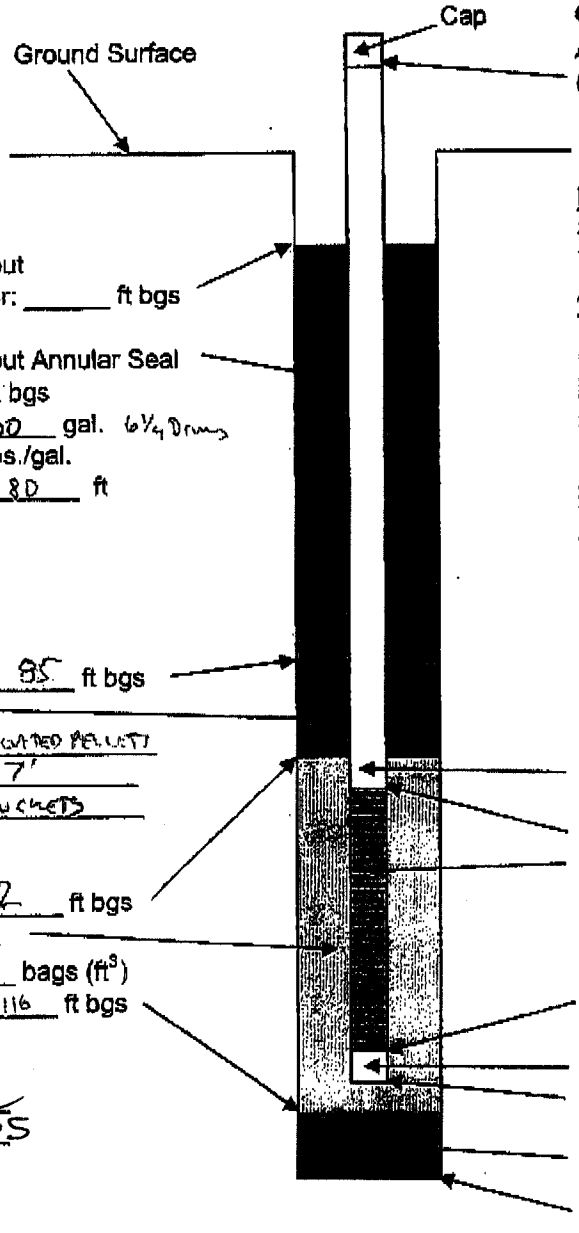

Cement/Bentonite Grout
Top of grout after 24 hr: _____ ft bgs

Cement/Bentonite Grout Annular Seal
Filled to 1 ft bgs
Volume Placed 300 gal. 6 1/4 Drums
Density 15 lbs./gal.
Tremie Pipe Length 80 ft

Top of bentonite seal 85 ft bgs
Bentonite Seal
Type 1/4" TR. -30 COATED PELLETS
Thickness (5 ft min) 7'
Volume Placed: 3 BUCKETS

Top of filter pack 92 ft bgs
No.3 Sand Filter Pack
Volume Placed 7 bags (ft³)
Bottom of filter pack 116 ft bgs

QA/QC: CMC
Date: 6/21/05

ELEVATION DATA

Stake Elevation	50.68
Datum Differential	—
Adjusted Stake Elevation	50.68
Vertical Offset to Stake	0
Ground Elevation at Well	50.68
Planned Screen Elevation	-45.00 -65
Screen Interval (Depth)	95.55 to 115

SURGE/DEPTH RECORD

TD Inside Well Before Surging	NM
Top of Sand Before Surging	93
Surge Time	15 min
Top of Sand After Surging	94
Distance Sand Dropped	1
DTW Inside Well After Surging	— 66.94 (6-21-10)
TD Inside Well After Surging	116

2-inch diameter SCH-40 Blank casing

Top of screen 95.5 ft bgs
0.020 - inch Machine Sotted Screen
2-inch diameter, High Flow
SCH - 80 PVC
Screen Length 20 ft
Bottom of Screen 115.5 ft bgs

6-inch long Threaded End Cap
Bottom of Cap 116 ft bgs

Collapsed Native Material 116 - 119

Total Depth of Borehole 119 ft bgs @ 1625

COMMENTS

HALEY & ALDRICH

Well Construction Record
Parcel C Remediation Well Installation Program
Former Boeing C-6 Site
Los Angeles, California

Well ID: AW0065C
Start Date/Time: 06/16/05 @1530
Finish Date/Time: 6-17-05 / 1010
Driller/Rig: WDC / CME 75 / Miguel Alvara
Geologist: R. Ramsi / HA
Amendment Well Stick-up Height
(minimum 24-in) 46 inches AGS

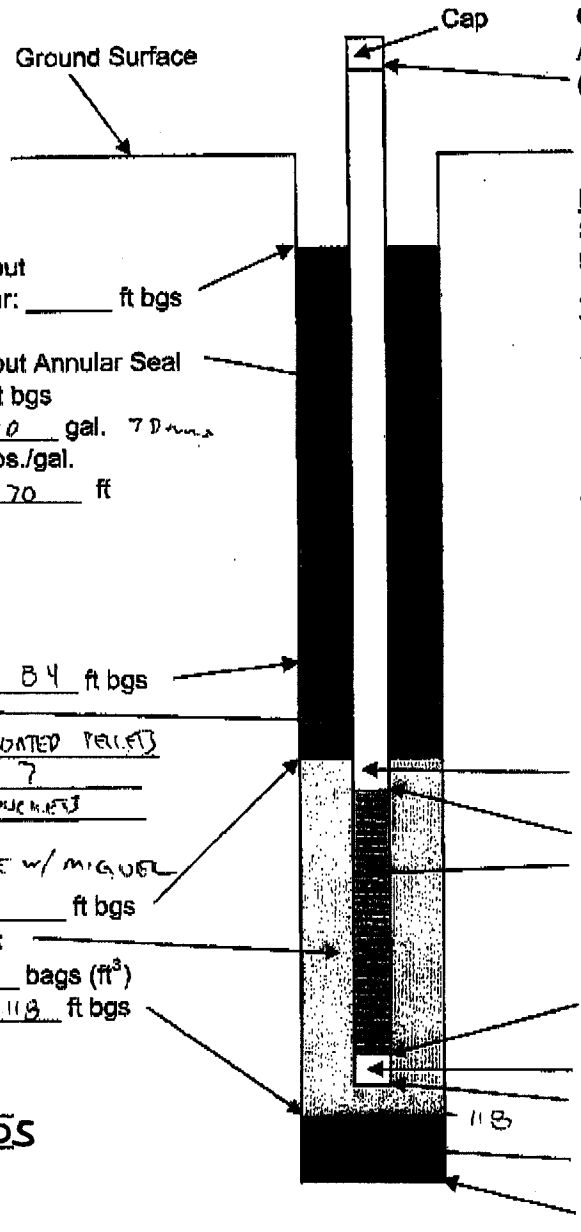

Cement/Bentonite Grout
Top of grout after 24 hr: _____ ft bgs

Cement/Bentonite Grout Annular Seal
Filled to 7 ft bgs
Volume Placed 350 gal. 7 Drums
Density 15 lbs./gal.
Tremie Pipe Length 70 ft

Top of bentonite seal 84 ft bgs
Bentonite Seal
Type 1/4 - TR-30 COATED PELLETS
Thickness (5 ft min) 7
Volume Placed: 3 BUCKETS

Top of filter pack 91 ft bgs
No.3 Sand Filter Pack
Volume Placed 7.5 bags (ft³)
Bottom of filter pack 118 ft bgs

QA/QC: CWC
Date: 6/21/05

ELEVATION DATA

Stake Elevation	51.10
Datum Differential	—
Adjusted Stake Elevation	51.10
Vertical Offset to Stake	0
Ground Elevation at Well	51.10
Planned Screen Elevation	-45 to -65
Screen Interval (Depth)	96' to 116'

SURGE/DEPTH RECORD

TD Inside Well Before Surging	116.5 (TOC)
Top of Sand Before Surging	92 (INSIDE NUMBERS)
Surge Time	15 min
Top of Sand After Surging	94
Distance Sand Dropped	2
DTW Inside Well After Surging	66.98 (6-17-1015)
TD Inside Well After Surging	116 (TOC)

2-inch diameter SCH-40 Blank casing

Top of screen 96 ft bgs
0.020 - inch Machine Sotted Screen
2-inch diameter, High Flow
SCH - 80 PVC
Screen Length 20 ft
Bottom of Screen 116 ft bgs

6-inch long Threaded End Cap
Bottom of Cap 116.5 ft bgs

Collapsed Native Material 118 - 120

Total Depth of Borehole 120 ft bgs

8-inch diameter borehole

TD @ 6/16/05 16:45

COMMENTS

Auger stuck in hole after sitting over night w/ seal in place - hole open to 86' - seal intact
Turned auger to loosen up

HALEY & ALDRICH

Well Construction Record
Parcel C Remediation Well Installation Program
Former Boeing C-6 Site
Los Angeles, California

Well ID: AW0051C
Start Date/Time: F 6/17/05 10:00
Finish Date/Time: 6-17-05/1510
Driller/Rig: PAUL ALMANZA CME-8
Geologist: T. Hammond

Amendment Well Stick-up Height (minimum 24-in) 44 inches AGS

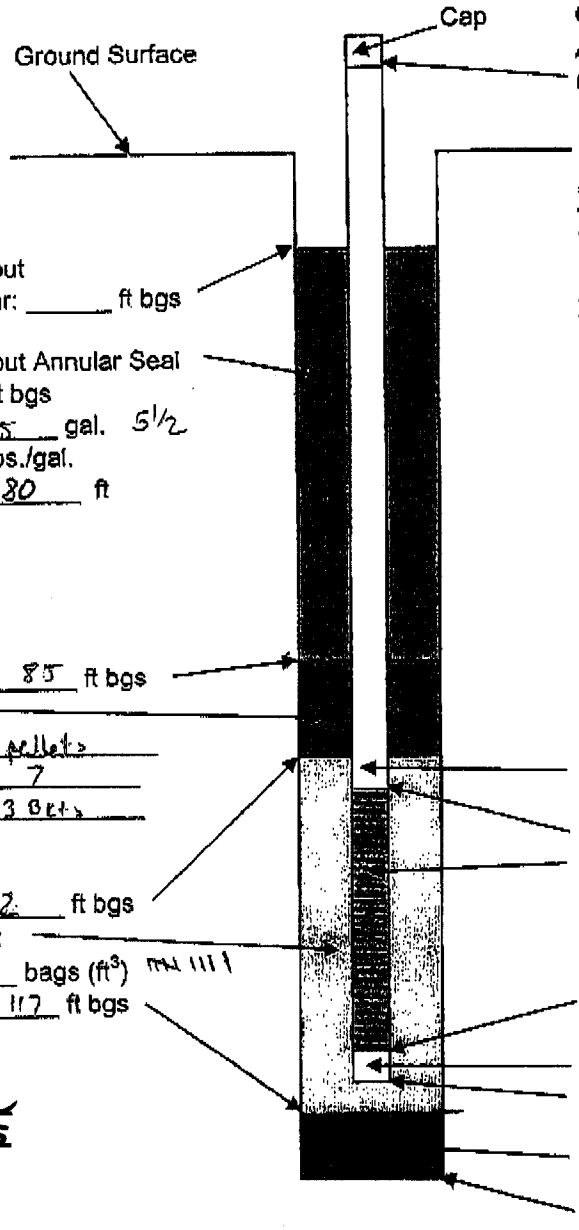

ELEVATION DATA

Stake Elevation	51.05
Datum Differential	—
Adjusted Stake Elevation	51.05
Vertical Offset to Stake	—
Ground Elevation at Well	51.05
Planned Screen Elevation	-45 to -65
Screen Interval (Depth)	96 to 116

SURGE/DEPTH RECORD

TD Inside Well Before Surging	115 (TOC)
Top of Sand Before Surging	92
Surge Time	15
Top of Sand After Surging	114.½
Distance Sand Dropped	0.½
DTW Inside Well After Surging	66.88
TD Inside Well After Surging	115

Cement/Bentonite Grout
Top of grout after 24 hr: _____ ft bgs

Cement/Bentonite Grout Annular Seal
Filled to 3 ft bgs
Volume Placed 275 gal. 5½
Density 15 lbs./gal.
Tremie Pipe Length 80 ft

Top of bentonite seal 85 ft bgs
Bentonite Seal
Type ¼" Coated pellets
Thickness (5 ft min) 7
Volume Placed: 3 bags

Top of filter pack 92 ft bgs
No.3 Sand Filter Pack
Volume Placed 9 bags (ft^3) max 111
Bottom of filter pack 117 ft bgs

2-inch diameter SCH-40 Blank casing

Top of screen 96 ft bgs
0.020 - inch Machine Sotted Screen
2-inch diameter, High Flow
SCH - 80 PVC
Screen Length 20 ft
Bottom of Screen 116 ft bgs

6-inch long Threaded End Cap
Bottom of Cap 116.5 ft bgs

Collapsed Native Material 117 - 120

Total Depth of Borehole 120 ft bgs

QA/QC: CMC
Date: 6/21/05

COMMENTS

Haley & Aldrich, Inc.
20040602_Well Construction Record Form VER 3.xls

1 December 2004

HALEY & ALDRICH

Well Construction Record
Parcel C Remediation Well Installation Program
Former Boeing C-6 Site
Los Angeles, California

Well ID: AW0062C
Start Date/Time: F 6/17/05 7:50
Finish Date/Time: 6-17-05 1345
Driller/Rig: I. GMASI & GUTIERREZ
Geologist: T. HAMMOND

Amendment Well Stick-up Height (minimum 24-in) 35 inches AGS

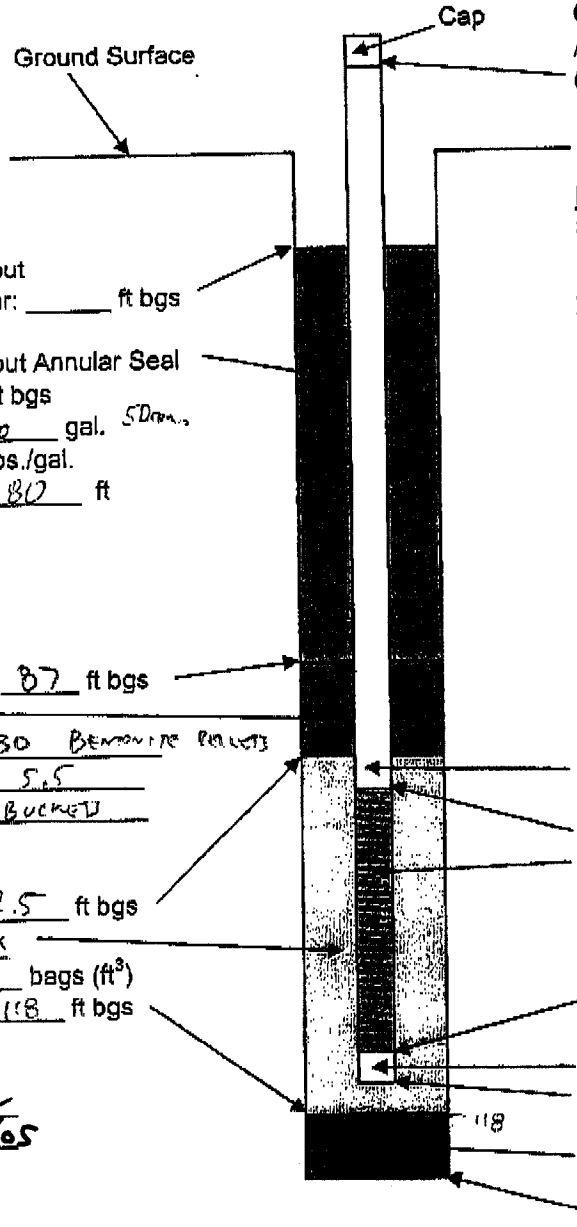

Cement/Bentonite Grout
Top of grout after 24 hr: _____ ft bgs

Cement/Bentonite Grout Annular Seal
Filled to 1 ft bgs
Volume Placed 250 gal. 5 Drums
Density 15 lbs./gal.
Tremie Pipe Length 80 ft

Top of bentonite seal 87 ft bgs
Bentonite Seal
Type 1/4" TR. -30 BENTONITE PELLETS
Thickness (5 ft min) 5.5
Volume Placed: 3 BUCKETS

Top of filter pack 92.5 ft bgs
No.3 Sand Filter Pack
Volume Placed 6.5 bags (ft^3)
Bottom of filter pack 118 ft bgs

QA/QC: Case
Date: 6/21/05

ELEVATION DATA

Stake Elevation	50.93
Datum Differential	—
Adjusted Stake Elevation	50.93
Vertical Offset to Stake	—
Ground Elevation at Well	50.93
Planned Screen Elevation	~45 TO ~65
Screen Interval (Depth)	96 TO 116

SURGE/DEPTH RECORD

TD Inside Well Before Surging	118.5
Top of Sand Before Surging	93
Surge Time	15 min
Top of Sand After Surging	95
Distance Sand Dropped	2
DTW Inside Well After Surging	—
TD Inside Well After Surging	119.3

2-inch diameter SCH-40 Blank casing

Top of screen 97.5 ft bgs
0.020 - inch Machine Sotted Screen
2-inch diameter, High Flow
SCH - 80 PVC
Screen Length 20 ft
Bottom of Screen 117.5 ft bgs

6-inch long Threaded End Cap
Bottom of Cap 118 ft bgs

Collapsed Native Material 118 - 119

Total Depth of Borehole 119 ft bgs
6/17/05 9:30

8-inch diameter borehole

COMMENTS

WELL DROPPED ~1 FT DURING SURGE

HALEY & ALDRICH

Well Construction Record
Parcel C Remediation Well Installation Program
Former Boeing C-6 Site
Los Angeles, California

Well ID: AW00 43C
Start Date/Time: 6-17-05/1025
Finish Date/Time: 6-20-05/ 1435
Driller/Rig: WDC/CME 85/Ted
Geologist: G. Androsky

Amendment Well Stick-up Height (minimum 24-in) 50 inches AGS

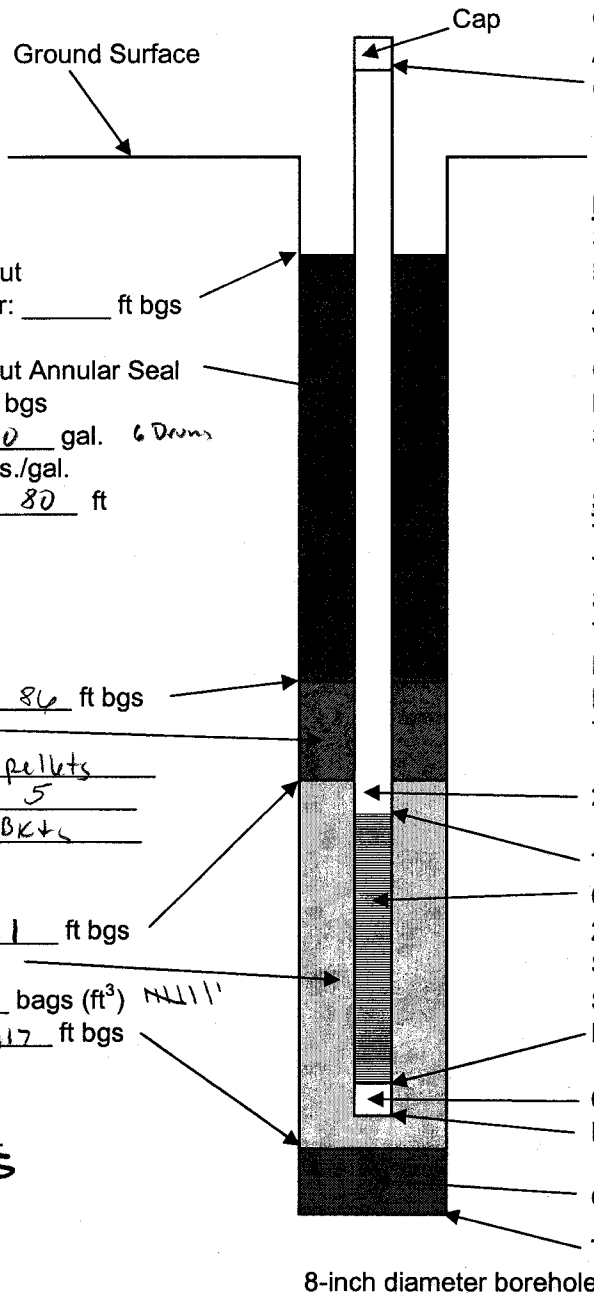

Cement/Bentonite Grout
Top of grout after 24 hr: _____ ft bgs

Cement/Bentonite Grout Annular Seal
Filled to 1 ft bgs
Volume Placed 300 gal. 6 Drums
Density 15 lbs./gal.
Tremie Pipe Length 80 ft

Top of bentonite seal 86 ft bgs
Bentonite Seal
Type 1/4" Coated pellets
Thickness (5 ft min) 5
Volume Placed: 3 Bkts

Top of filter pack 91 ft bgs
No.3 Sand Filter Pack
Volume Placed 7 1/2 bags (ft³) ~~||||~~
Bottom of filter pack 117 ft bgs

QA/QC: CMC
Date: 6-21-05

ELEVATION DATA

Stake Elevation	50.54
Datum Differential	NA
Adjusted Stake Elevation	50.54
Vertical Offset to Stake	NA
Ground Elevation at Well	50.44
Planned Screen Elevation	-45 to -65
Screen Interval (Depth)	95.5 to 115.5

SURGE/DEPTH RECORD

TD Inside Well Before Surging	NM (~116)
Top of Sand Before Surging	91
Surge Time	15
Top of Sand After Surging	88.5
Distance Sand Dropped	2.5
DTW Inside Well After Surging	66.94
TD Inside Well After Surging	116

2-inch diameter SCH-40 Blank casing

Top of screen 95.5 ft bgs
0.020 - inch Machine Sotted Screen
2-inch diameter, High Flow
SCH - 80 PVC
Screen Length 20 ft
Bottom of Screen 115.5 ft bgs

6-inch long Threaded End Cap
Bottom of Cap 116 ft bgs

Collapsed Native Material NONE

Total Depth of Borehole 117 ft bgs 6-20-05 1017

COMMENTS

1200 Auger @ 90', Crew pulled off to perform site clean up
6-20-05 0820 started drilling again to 116'

HALEY & ALDRICH

Well Construction Record
Parcel C Remediation Well Installation Program
Former Boeing C-6 Site
Los Angeles, California

Well ID: AWØØ44C
Start Date/Time: 6-17-05 / 1035
Finish Date/Time: 6-20-05 / 1230
Driller/Rig: WDC/CME75/Miguel
Geologist: G. Androsko

Amendment Well Stick-up Height (minimum 24-in) 42 inches AGS

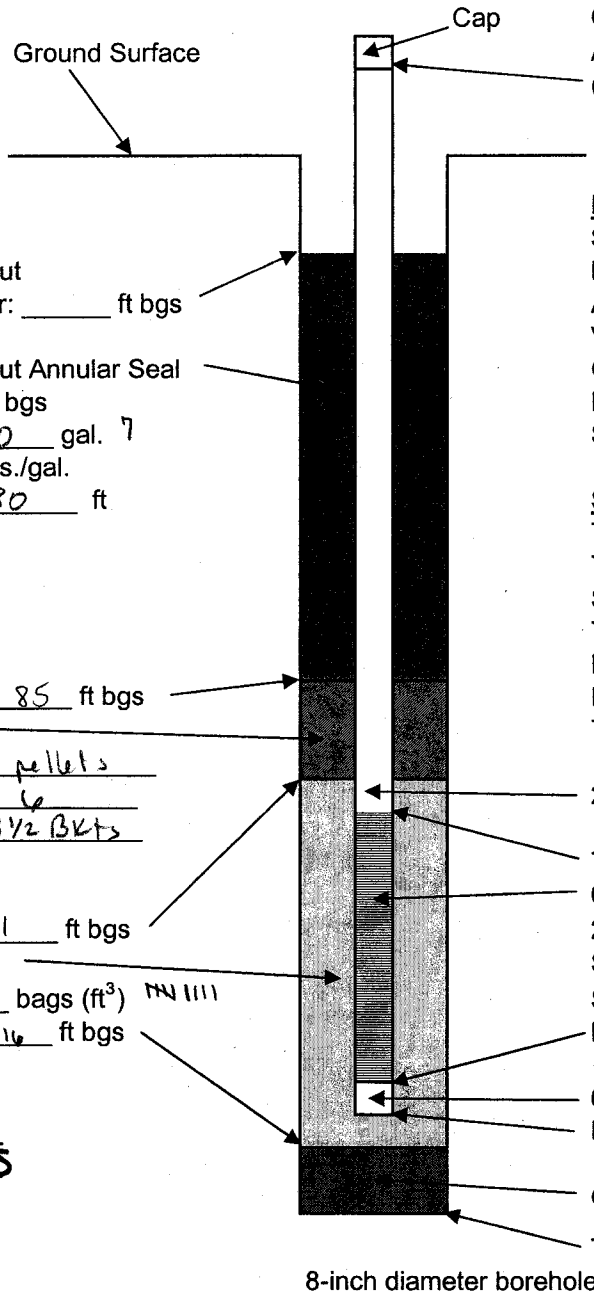

Cement/Bentonite Grout
Top of grout after 24 hr: _____ ft bgs

Cement/Bentonite Grout Annular Seal
Filled to 1 ft bgs
Volume Placed 350 gal. 7
Density 15 lbs./gal.
Tremie Pipe Length 80 ft

Top of bentonite seal 85 ft bgs
Bentonite Seal
Type 1/4" Coated pellets
Thickness (5 ft min) 6
Volume Placed: 3 1/2 Bkts

Top of filter pack 91 ft bgs
No.3 Sand Filter Pack
Volume Placed 9 bags (ft³) 1111
Bottom of filter pack 116 ft bgs

QA/QC: CMC
Date: 6-21-05

8-inch diameter borehole

ELEVATION DATA

Stake Elevation	51.12
Datum Differential	NA
Adjusted Stake Elevation	51.12
Vertical Offset to Stake	NA
Ground Elevation at Well	51.12
Planned Screen Elevation	-45 to -65
Screen Interval (Depth)	96 to 116

SURGE/DEPTH RECORD

TD Inside Well Before Surging	116.5
Top of Sand Before Surging	91
Surge Time	13 0909 -0922
Top of Sand After Surging	91
Distance Sand Dropped	0
DTW Inside Well After Surging	66.99 TOC
TD Inside Well After Surging	116.5

2-inch diameter SCH-40 Blank casing

Top of screen 96 ft bgs
0.020 - inch Machine Sotted Screen
2-inch diameter, High Flow
SCH - 80 PVC
Screen Length 20 ft
Bottom of Screen 116 ft bgs

6-inch long Threaded End Cap
Bottom of Cap 116.5 ft bgs

Collapsed Native Material 116 - 118

Total Depth of Borehole 118 ft bgs 6-20-05 0820

COMMENTS

1222 Auger @ 85' - crew pulled off to perform site cleanup
6-20-05 0730 Started drilling to 116.5'

64 UB

HALEY & ALDRICH

Well Construction Record
Parcel C Remediation Well Installation Program
Former Boeing C-6 Site
Los Angeles, California

Well ID: AW ØØ53C
Start Date/Time: 6-20-05 / 0830
Finish Date/Time: 6-20-05 / 1400
Driller/Rig: WDC/CME 75/ Jorge
Geologist: G. Androsko

Amendment Well Stick-up Height (minimum 24-in) 42 inches AGS

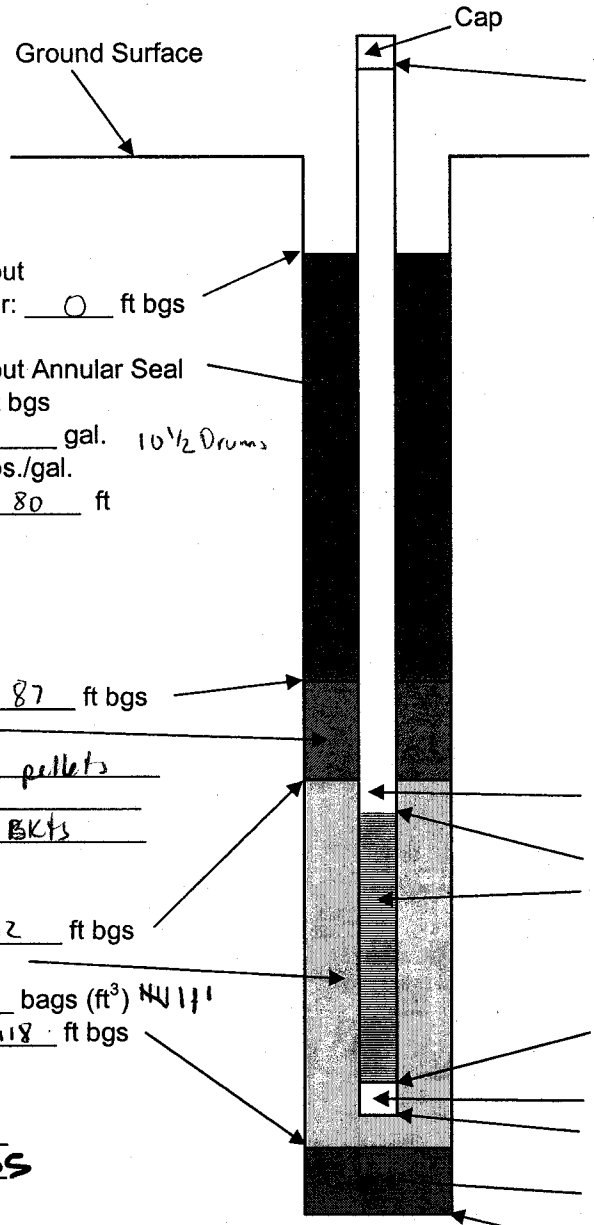

Cement/Bentonite Grout
Top of grout after 24 hr: 0 ft bgs

Cement/Bentonite Grout Annular Seal
Filled to 0 ft bgs
Volume Placed 500 gal. 10½ Drums
Density 15 lbs./gal.
Tremie Pipe Length 80 ft

Top of bentonite seal 87 ft bgs
Bentonite Seal
Type ¼" Coated pellets
Thickness (5 ft min) _____
Volume Placed: 3 BKts

Top of filter pack 92 ft bgs
No.3 Sand Filter Pack
Volume Placed 7½ bags (ft³) 11 ft
Bottom of filter pack 118 ft bgs

QA/QC: CMC
Date: 6/21/05

ELEVATION DATA

Stake Elevation	49.85
Datum Differential	NA
Adjusted Stake Elevation	49.85
Vertical Offset to Stake	NA
Ground Elevation at Well	49.85
Planned Screen Elevation	-45 to -65
Screen Interval (Depth)	95 to 115

SURGE/DEPTH RECORD

TD Inside Well Before Surging	115.0
Top of Sand Before Surging	92
Surge Time	15 1108 -> 1125
Top of Sand After Surging	93
Distance Sand Dropped	1
DTW Inside Well After Surging	66.33
TD Inside Well After Surging	114.5

2-inch diameter SCH-40 Blank casing

Top of screen 95 ft bgs
0.020 - inch Machine Sotted Screen
2-inch diameter, High Flow
SCH - 80 PVC
Screen Length 20 ft
Bottom of Screen 115 ft bgs

6-inch long Threaded End Cap
Bottom of Cap 115½ ft bgs

Collapsed Native Material NONE

Total Depth of Borehole 118 ft bgs 1025

8-inch diameter borehole

COMMENTS

- Hand augered to ~7' 2' east of location to check for fire main
- moved location 3's to avoid storm drain excavation

HALEY & ALDRICH

Well Construction Record
Parcel C Remediation Well Installation Program
Former Boeing C-6 Site
Los Angeles, California

Well ID: AW00 63UB
Start Date/Time: 6-20-05/1245
Finish Date/Time: 6-20-05/ 1600
Driller/Rig: WDC/CME75/Miguel
Geologist: G. Androsko

Amendment Well Stick-up Height (minimum 24-in) 68 inches AGS
5'8"

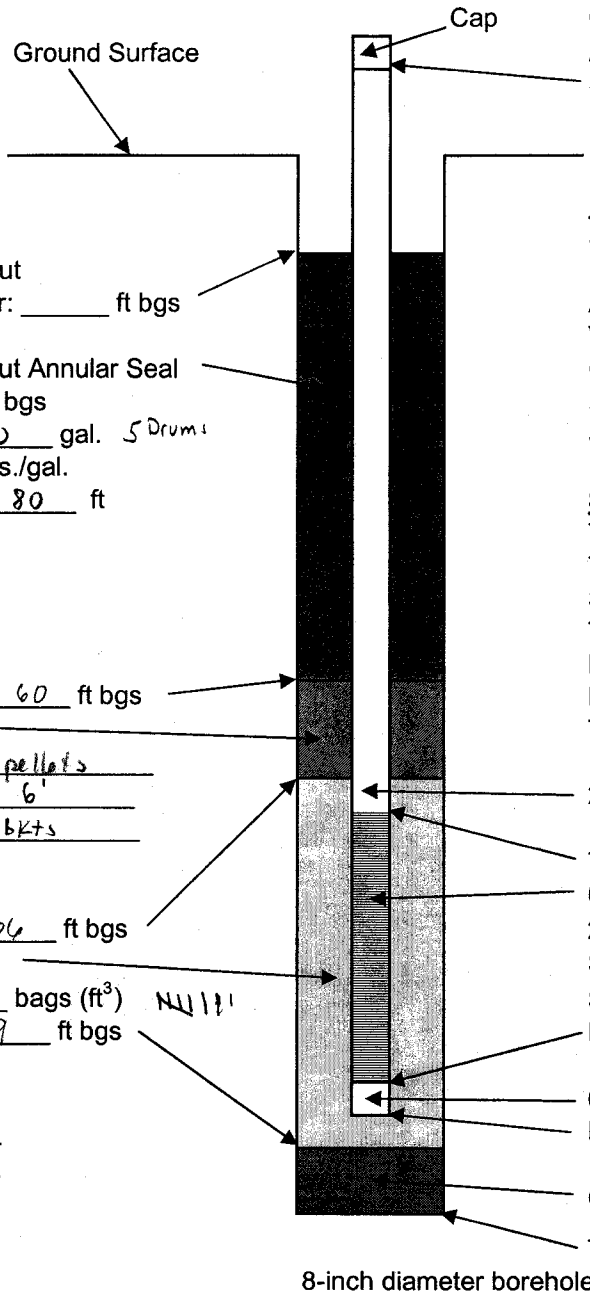

Cement/Bentonite Grout
Top of grout after 24 hr: _____ ft bgs

Cement/Bentonite Grout Annular Seal
Filled to 1 ft bgs
Volume Placed 250 gal. 5 Drums
Density 15 lbs./gal.
Tremie Pipe Length 80 ft

Top of bentonite seal 60 ft bgs
Bentonite Seal
Type 1/4" Coated pellets
Thickness (5 ft min) 6'
Volume Placed: 3 bkts

Top of filter pack 66 ft bgs
No.3 Sand Filter Pack
Volume Placed 7 1/2 bags (ft³) NU!!!
Bottom of filter pack 89 ft bgs

QA/QC: CME
Date: 6-21-05

ELEVATION DATA

Stake Elevation	50.73
Datum Differential	NA
Adjusted Stake Elevation	50.73
Vertical Offset to Stake	NA
Ground Elevation at Well	50.73
Planned Screen Elevation	-16 to -36
Screen Interval (Depth)	66 1/2 to 86 1/2 Adjusted down to 68 1/2 to 88 1/2

SURGE/DEPTH RECORD

TD Inside Well Before Surging	88 (93 1/2 TOC)
Top of Sand Before Surging	66
Surge Time	15 min
Top of Sand After Surging	68
Distance Sand Dropped	2
DTW Inside Well After Surging	69.27
TD Inside Well After Surging	93 1/2 TOC

2-inch diameter SCH-40 Blank casing

Top of screen 68 1/2 ft bgs
0.020 - inch Machine Sotted Screen
2-inch diameter, High Flow
SCH - 40 PVC
Screen Length 20 ft
Bottom of Screen 88 1/2 ft bgs

6-inch long Threaded End Cap
Bottom of Cap 89 ft bgs

Collapsed Native Material 89-92

Total Depth of Borehole 92 ft bgs @1340

8-inch diameter borehole

COMMENTS

Haley & Aldrich, Inc.
20040602_Well Construction Record Form VER 3.xls

1 December 2004

HALEY & ALDRICH

Well Construction Record
Parcel C Remediation Well Installation Program
Former Boeing C-6 Site
Los Angeles, California

Well ID: AW0086 C
Start Date/Time: M 6/20/05 7:30
Finish Date/Time: M 6/20/05 1330
Driller/Rig: RUBEN LARES CME 95
Geologist: T. HAMMOND

Amendment Well Stick-up Height (minimum 24-in) _____ inches AGS

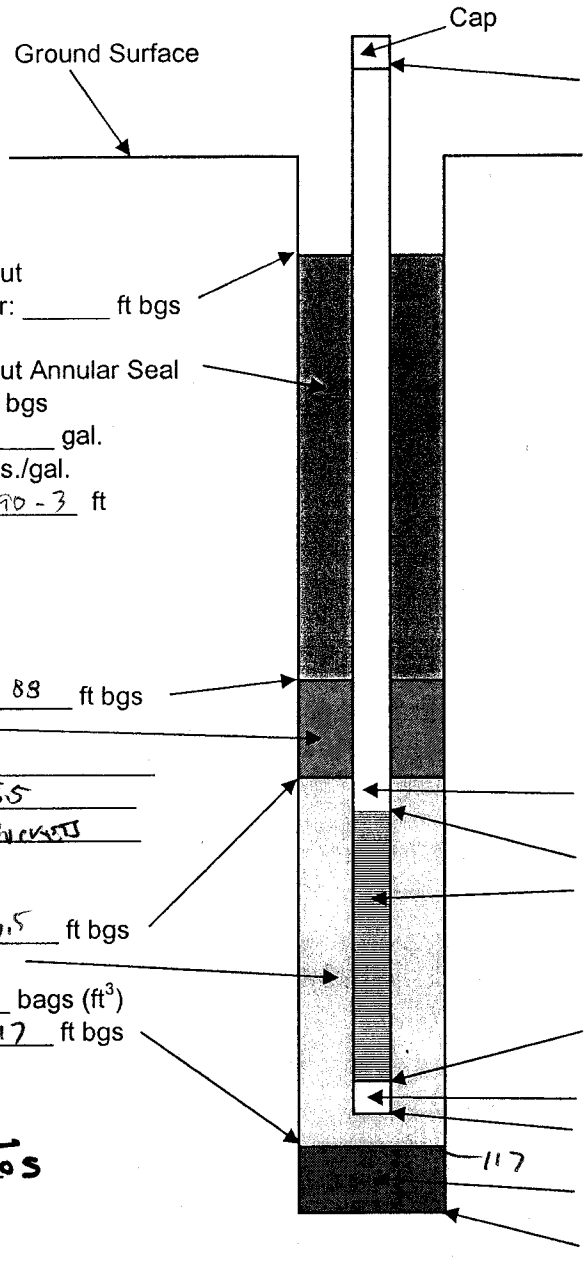

Cement/Bentonite Grout
Top of grout after 24 hr: _____ ft bgs

Cement/Bentonite Grout Annular Seal
Filled to 4 ft bgs
Volume Placed 300 gal.
Density 15 lbs./gal.
Tremie Pipe Length 90-3 ft

Top of bentonite seal 88 ft bgs
Bentonite Seal
Type 1/4" TR-30
Thickness (5 ft min) 5.5
Volume Placed: 3 BUCKETS

Top of filter pack 93.5 ft bgs
No.3 Sand Filter Pack
Volume Placed 7 bags (ft^3)
Bottom of filter pack 117 ft bgs

QA/QC: CDLC
Date: 6/21/05

ELEVATION DATA

Stake Elevation	51.54
Datum Differential	—
Adjusted Stake Elevation	51.54
Vertical Offset to Stake	—
Ground Elevation at Well	51.54
Planned Screen Elevation	-45 TO -65
Screen Interval (Depth)	96.5 TO 116.5

SURGE/DEPTH RECORD

TD Inside Well Before Surging	116 TOC
Top of Sand Before Surging	94
Surge Time	15 min
Top of Sand After Surging	96
Distance Sand Dropped	2'
DTW Inside Well After Surging	NM
TD Inside Well After Surging	115 TOC

2-inch diameter SCH-40 Blank casing

Top of screen 96.5 ft bgs
0.020 - inch Machine Sotted Screen
2-inch diameter, High Flow
SCH - 80 PVC
Screen Length 20 ft
Bottom of Screen 116.5 ft bgs

6-inch long Threaded End Cap
Bottom of Cap 117 ft bgs

Collapsed Native Material 117-120

Total Depth of Borehole 120 ft bgs

COMMENTS

HALEY & ALDRICH

Well Construction Record
Parcel C Remediation Well Installation Program
Former Boeing C-6 Site
Los Angeles, California

Well ID: AW0023C
Start Date/Time: M 6/20/05 13:40
Finish Date/Time: TU 6/21/05 845
Driller/Rig: RUBEN LARES CME-85
Geologist: T. HAMMOND

Amendment Well Stick-up Height (minimum 24-in) _____ inches AGS

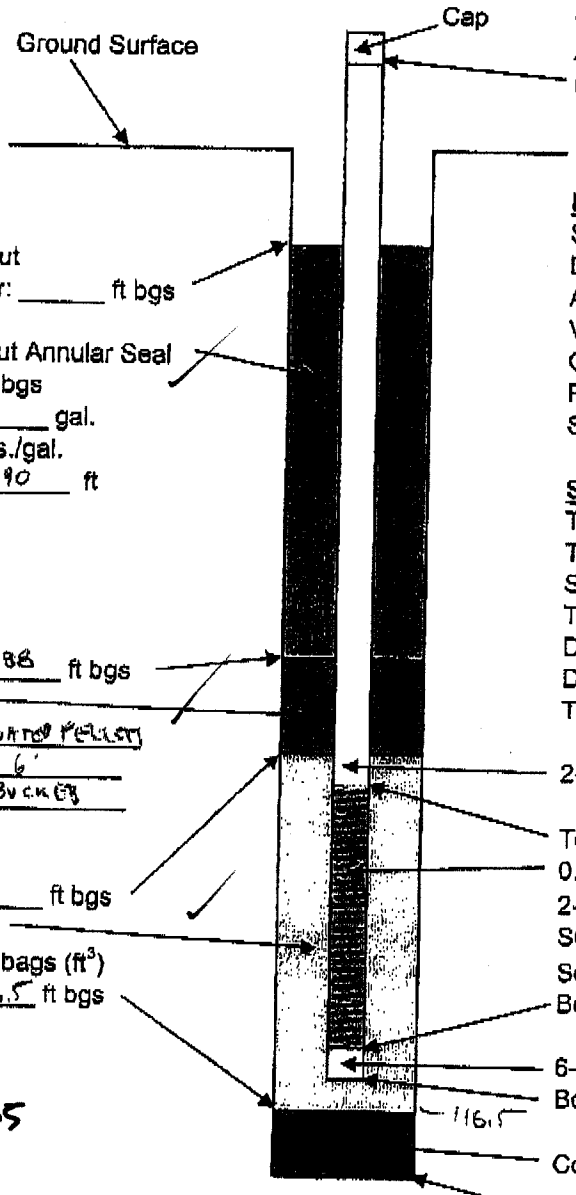

Cement/Bentonite Grout
Top of grout after 24 hr: _____ ft bgs

Cement/Bentonite Grout Annular Seal
Filled to 0 ft bgs
Volume Placed 250 gal.
Density 15 lbs./gal.
Tremie Pipe Length 90 ft

Top of bentonite seal 88 ft bgs
Bentonite Seal
Type 1/4" TR-30 COARSE PELLETS
Thickness (5 ft min) 6'
Volume Placed: 3 BUCKETS

Top of filter pack 94 ft bgs
No.3 Sand Filter Pack
Volume Placed 7 bags (ft³)
Bottom of filter pack 116.5 ft bgs

QA/QC: CMC
Date: 6-22-05

ELEVATION DATA

Stake Elevation	51.64
Datum Differential	—
Adjusted Stake Elevation	51.64
Vertical Offset to Stake	—
Ground Elevation at Well	51.64
Planned Screen Elevation	-45 TO -65
Screen Interval (Depth)	96.5 TO 116.5

SURGE/DEPTH RECORD

TD Inside Well Before Surging	112
Top of Sand Before Surging	93.5
Surge Time	15 min
Top of Sand After Surging	94
Distance Sand Dropped	0.5
DTW Inside Well After Surging	—
TD Inside Well After Surging	113

2-inch diameter SCH-40 Blank casing

Top of screen 96 ft bgs
0.020 - inch Machine Sotted Screen
2-inch diameter, High Flow
SCH - 80 PVC
Screen Length 20 ft
Bottom of Screen 116 ft bgs

6-inch long Threaded End Cap
Bottom of Cap 116.5 ft bgs

Collapsed Native Material

Total Depth of Borehole 120 ft bgs
15:00

COMMENTS

Haley & Aldrich, Inc.
20040602_Well Construction Record Form VER 3.xls

1 December 2004

HALEY & ALDRICH

Well Construction Record
Parcel C Remediation Well Installation Program
Former Boeing C-6 Site
Los Angeles, California

Well ID: AW 00640B
Start Date/Time: 6-21 05 /0810
Finish Date/Time: 6-21-05 /1225
Driller/Rig: WDC/CME 75/Miguel Alvarado
Geologist: G. Androsko

Amendment Well Stick-up Height (minimum 24-in) 71 inches AGS
4.2'

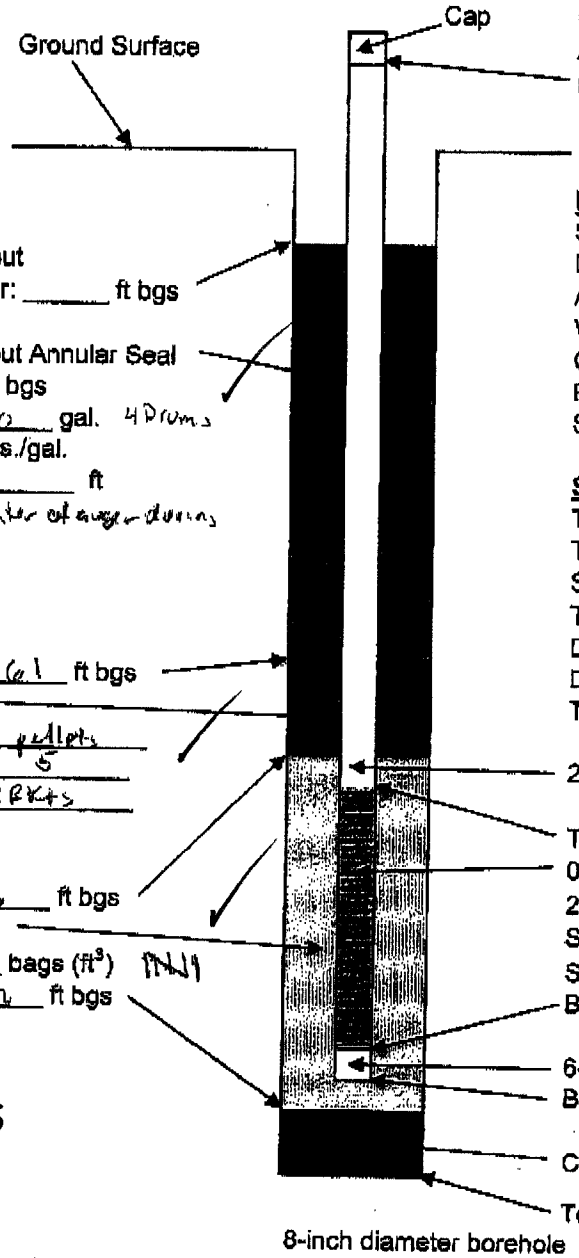

Cement/Bentonite Grout
Top of grout after 24 hr: _____ ft bgs

Cement/Bentonite Grout Annular Seal
Filled to 1 ft bgs
Volume Placed 200 gal. 4 Drums
Density 15 lbs./gal.
Tremie Pipe Length _____ ft
↳ used center of auger during removal

Top of bentonite seal 61 ft bgs
Bentonite Seal
Type 1/4" Coated pellets
Thickness (5 ft min) 5
Volume Placed: 3 Bkts

Top of filter pack 66 ft bgs
No.3 Sand Filter Pack
Volume Placed 7 bags (ft³) 1 1/2
Bottom of filter pack 92 ft bgs

QA/QC: CMC
Date: 6-22-05

ELEVATION DATA

Stake Elevation	50.53
Datum Differential	NA
Adjusted Stake Elevation	50.53
Vertical Offset to Stake	NA
Ground Elevation at Well	50.53
Planned Screen Elevation	-16 to -36
Screen Interval (Depth)	-66.5 to -86.5 Adjusted down to -68.5 to -88.5

SURGE/DEPTH RECORD

TD Inside Well Before Surging	88
Top of Sand Before Surging	66
Surge Time	15
Top of Sand After Surging	90
Distance Sand Dropped	2
DTW Inside Well After Surging	68.51
TD Inside Well After Surging	86 1/2

2-inch diameter SCH-40 Blank casing

Top of screen 68.5 ft bgs
0.020 - inch Machine Sotted Screen
2-inch diameter, High Flow
SCH - 40 PVC
Screen Length 20 ft
Bottom of Screen 88.5 ft bgs

6-inch long Threaded End Cap
Bottom of Cap 89 ft bgs
TOC

Collapsed Native Material

Total Depth of Borehole 97 ft bgs @ 0920

COMMENTS

Haley & Aldrich, Inc.
20040602_Well Construction Record Form VER 3.xls

1 December 2004

HALEY & ALDRICH

Well Construction Record
Parcel C Remediation Well Installation Program
Former Boeing C-6 Site
Los Angeles, California

Well ID: AW0032 C
Start Date/Time: M 6/20/05 745
Finish Date/Time: TU 6/21/05 1230
Driller/Rig: IGNACIO GUTIERREZ CME-75
Geologist: T. HAMMOND
Amendment Well Stick-up Height (minimum 24-in) _____ inches AGS

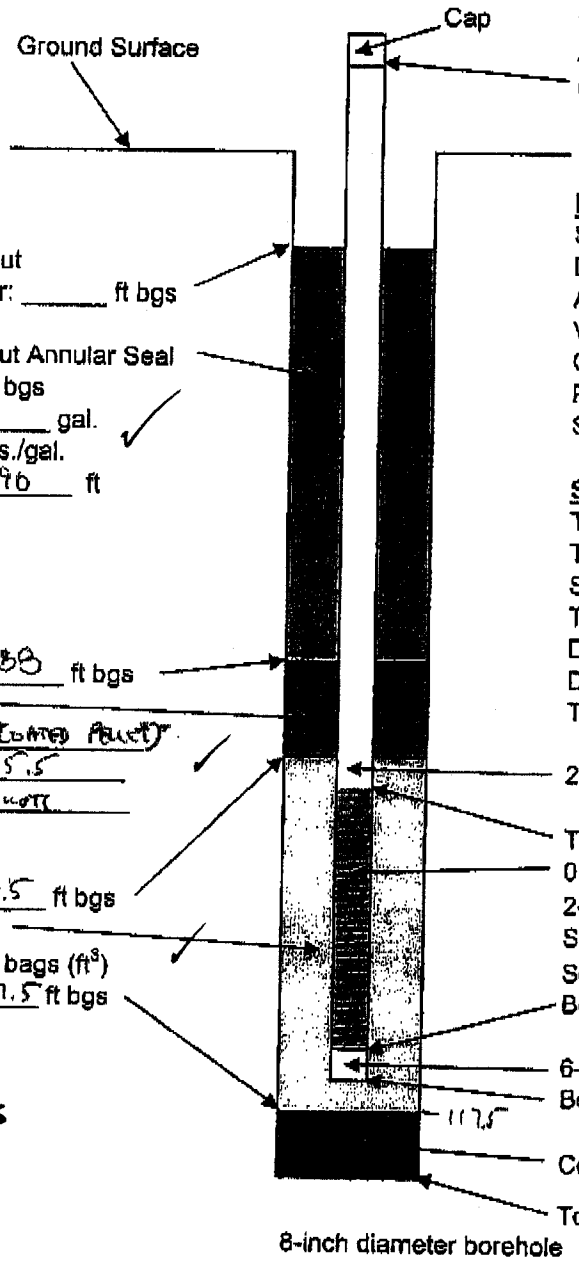

Cement/Bentonite Grout
Top of grout after 24 hr: _____ ft bgs

Cement/Bentonite Grout Annular Seal
Filled to 0 ft bgs
Volume Placed 350 gal.
Density 15 lbs./gal.
Tremie Pipe Length 96 ft

Top of bentonite seal 88 ft bgs
Bentonite Seal
Type 1/4" TR-30 Coated Pellets
Thickness (5 ft min) 5.5
Volume Placed: 3 Buckets

Top of filter pack 93.5 ft bgs
No.3 Sand Filter Pack
Volume Placed 8 bags (ft³)
Bottom of filter pack 117.5 ft bgs

QA/QC: CMC
Date: 6/22/05

ELEVATION DATA

Stake Elevation	51.34
Datum Differential	~
Adjusted Stake Elevation	51.34
Vertical Offset to Stake	~
Ground Elevation at Well	51.34 ≈ 51.5
Planned Screen Elevation	-45 to -65
Screen Interval (Depth)	96.5 to 116.5

SURGE/DEPTH RECORD

TD Inside Well Before Surging	120 (TOC)
Top of Sand Before Surging	93.5
Surge Time	15 min
Top of Sand After Surging	95
Distance Sand Dropped	1.5
DTW Inside Well After Surging	NM
TD Inside Well After Surging	120 TOC

2-inch diameter SCH-40 Blank casing

Top of screen 96.5 ft bgs
0.020 - inch Machine Sotted Screen
2-inch diameter, High Flow
SCH - 80 PVC
Screen Length 20 ft
Bottom of Screen 116.5 ft bgs

6-inch long Threaded End Cap
Bottom of Cap 117 ft bgs

Collapsed Native Material

Total Depth of Borehole 119 ft bgs

COMMENTS

BENTONITE PELLETS BRIDGED & PULLED THE WELL WITH THE AUGERS. WDC WILL RE-INSERT WOOD PLUG & RE-DRILL HOLE.

HALEY & ALDRICH

Well Construction Record
Parcel C Remediation Well Installation Program
Former Boeing C-6 Site
Los Angeles, California

Well ID: AW0010UB
Start Date/Time: TU 6/21/05 900
Finish Date/Time: TU 6/21/05 1300
Driller/Rig: RUBEN LARES CME-95
Geologist: T. HAMMOND
Amendment Well Stick-up Height (minimum 24-in) _____ inches AGS

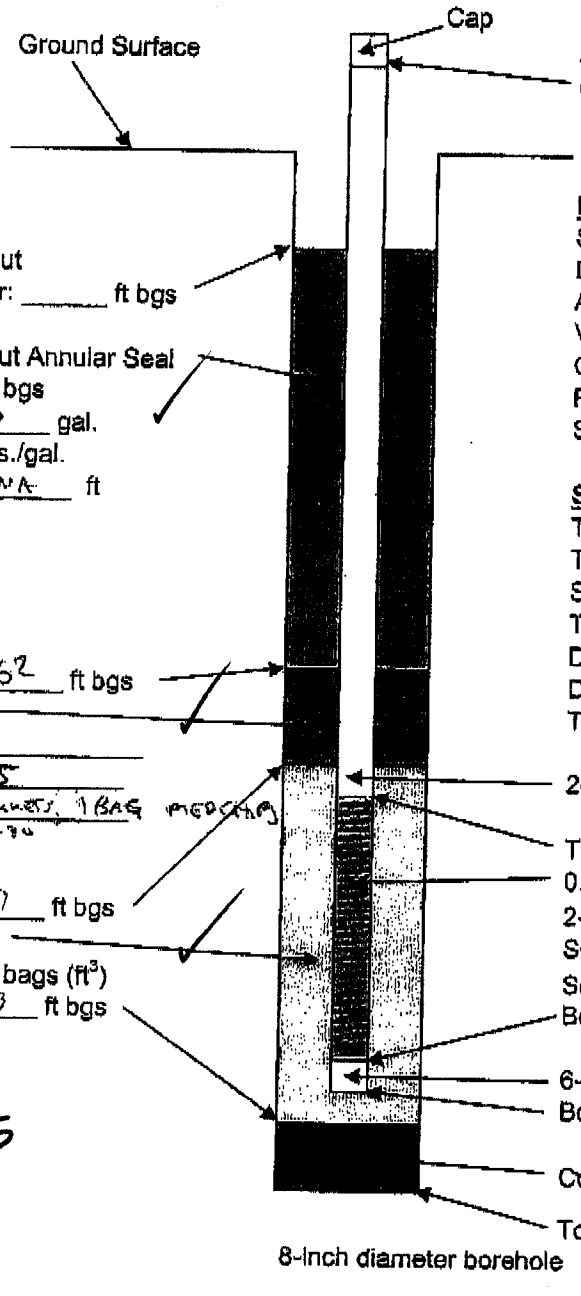

Cement/Bentonite Grout
Top of grout after 24 hr: _____ ft bgs

Cement/Bentonite Grout Annular Seal
Filled to 0 ft bgs
Volume Placed 200 gal.
Density 15 lbs./gal.
Tremie Pipe Length NA ft

Top of bentonite seal 62 ft bgs
Bentonite Seal
Type _____
Thickness (5 ft min) 5
Volume Placed: 3 BUCKETS, 1 BAG MEDIATING TR-70

Top of filter pack 67 ft bgs
No.3 Sand Filter Pack
Volume Placed 6 bags (ft³)
Bottom of filter pack 93 ft bgs

QA/QC: CMC
Date: 6-22-05

ELEVATION DATA

Stake Elevation	52.46
Datum Differential	—
Adjusted Stake Elevation	52.46
Vertical Offset to Stake	—
Ground Elevation at Well	52.46
Planned Screen Elevation	-18 TO -36
Screen Interval (Depth)	68.5 TO 88.5

DTW ~65
ADJUST DOWN 70-90

SURGE/DEPTH RECORD

TD Inside Well Before Surging	88
Top of Sand Before Surging	67
Surge Time	15 min
Top of Sand After Surging	67
Distance Sand Dropped	0
DTW Inside Well After Surging	~65 BGS
TD Inside Well After Surging	89.8 TOC

2-inch diameter SCH-40 Blank casing

Top of screen 70 ft bgs
0.020 - inch Machine Sotted Screen
2-inch diameter, High Flow
SCH - 40 PVC
Screen Length 20 ft
Bottom of Screen 90 ft bgs

6-inch long Threaded End Cap
Bottom of Cap 90.5 ft bgs

~~Collapsed Native Material~~ NONE

Total Depth of Borehole 93 ft bgs
~~102.5~~

COMMENTS

Haley & Aldrich, Inc.
20040602_Well Construction Record Form VER 3.xls

1 December 2004

HALEY & ALDRICH

Well Construction Record
Parcel C Remediation Well Installation Program
Former Boeing C-6 Site
Los Angeles, California

Well ID: AWØØ55UB
Start Date/Time: 6-21-05/1255
Finish Date/Time: 6/21/05 16:00
Driller/Rig: WDC/CME 75/Miguel Alvarez
Geologist: G. Androsko
Amendment Well Stick-up Height (minimum 24-in) 66½ inches AGS

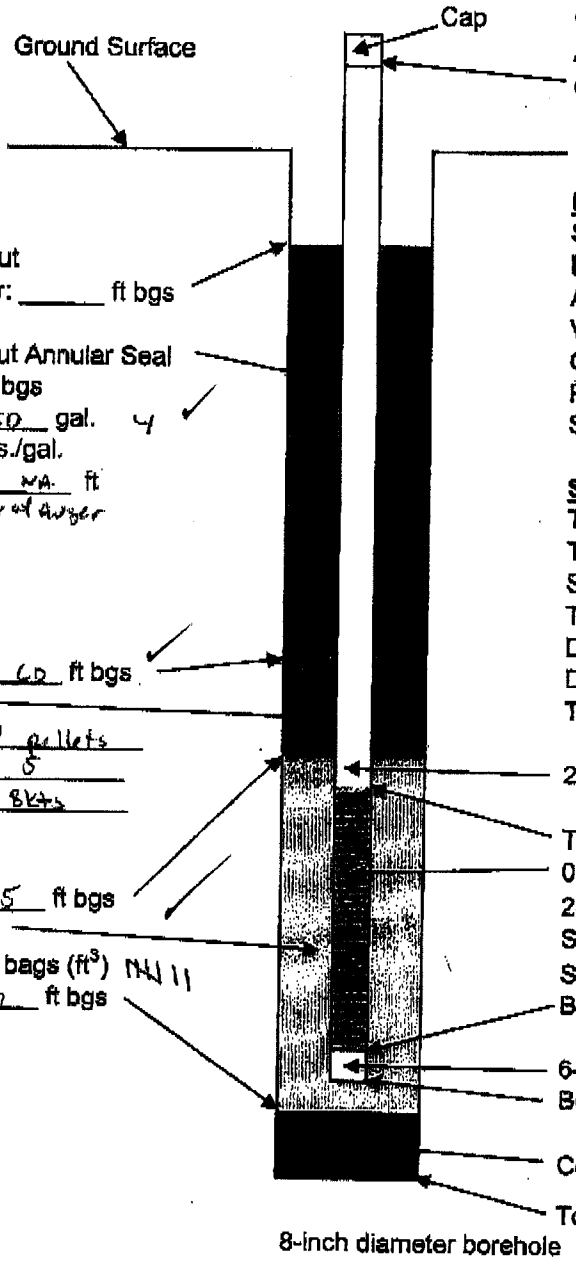

Cement/Bentonite Grout
Top of grout after 24 hr: _____ ft bgs

Cement/Bentonite Grout Annular Seal
Filled to 5 ft bgs
Volume Placed 7.50 gal. 4
Density 15 lbs./gal.
Tremie Pipe Length NA ft
used center of auger

Top of bentonite seal 60 ft bgs
Bentonite Seal
Type ¼ Coated pellets
Thickness (5 ft min) 5
Volume Placed: 3 8kts

Top of filter pack 65 ft bgs
No.3 Sand Filter Pack
Volume Placed 7½ bags (ft³) NW 11
Bottom of filter pack 97 ft bgs
9

QA/QC: CMC
Date: 6/22/05

ELEVATION DATA

Stake Elevation	51.29
Datum Differential	NA
Adjusted Stake Elevation	51.29
Vertical Offset to Stake	NA
Ground Elevation at Well	51.29
Planned Screen Elevation	-16 to -36
Screen Interval (Depth)	-67 to -87

adjusted down to -69 to 89

SURGE/DEPTH RECORD

TD Inside Well Before Surging	92
Top of Sand Before Surging	66
Surge Time	15 min
Top of Sand After Surging	69
Distance Sand Dropped	3
DTW Inside Well After Surging	69.28
TD Inside Well After Surging	91½

2-inch diameter SCH-40 Blank casing

Top of screen 69 ft bgs
0.020 - inch Machine Sotted Screen
2-inch diameter, High Flow
SCH - 40 PVC
Screen Length 20 ft
Bottom of Screen 89 ft bgs

6-inch long Threaded End Cap
Bottom of Cap 89½ ft bgs

Collapsed Native Material

Total Depth of Borehole 97 ft bgs @1420

COMMENTS

Haley & Aldrich, Inc.
20040602_Well Construction Record Form VER 3.xls

1 December 2004

HALEY & ALDRICH

Well Construction Record
Parcel C Remediation Well Installation Program
Former Boeing C-6 Site
Los Angeles, California

Well ID: AW 0009 UB
Start Date/Time: TU 6/21/05 13:15
Finish Date/Time: TU 6/21/05 16:30
Driller/Rig: RUBEN LARES CME-95
Geologist: T. HAMMOND
Amendment Well Stick-up Height (minimum 24-in) _____ inches AGS

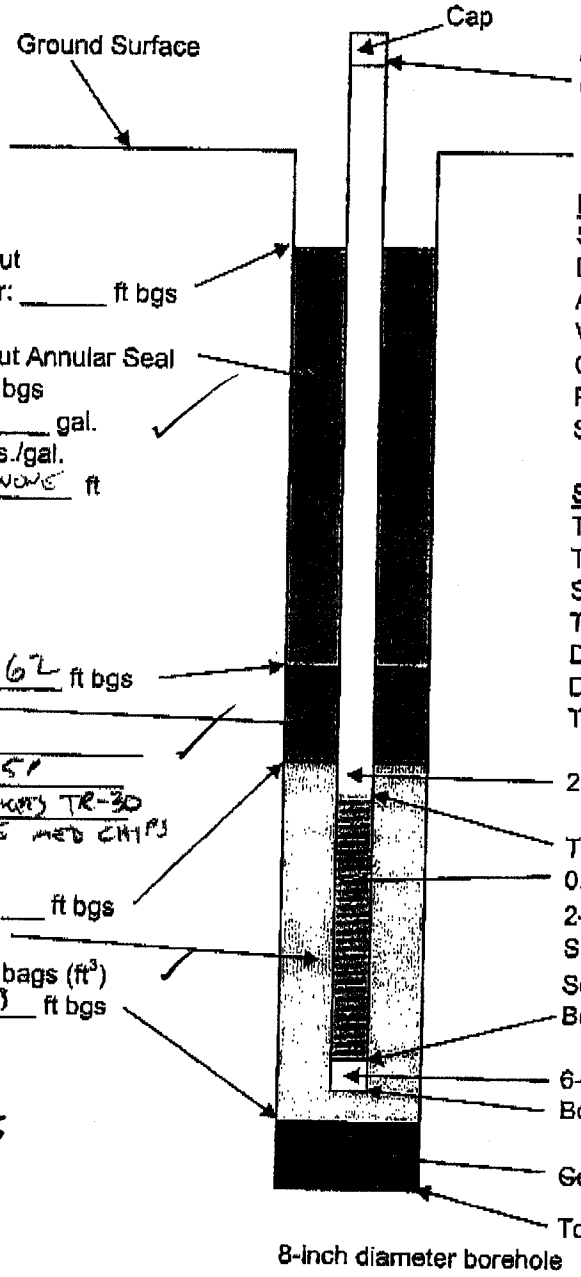

Cement/Bentonite Grout
Top of grout after 24 hr: _____ ft bgs

Cement/Bentonite Grout Annular Seal
Filled to 0 ft bgs
Volume Placed 225 gal.
Density 15 lbs./gal.
Tremie Pipe Length NONE ft

Top of bentonite seal 62 ft bgs
Bentonite Seal
Type _____
Thickness (5 ft min) 5'
Volume Placed: 2 BUCKETS TR-30
1 BAG MED CHIPS

Top of filter pack 67 ft bgs
No.3 Sand Filter Pack
Volume Placed 6.5 bags (ft³)
Bottom of filter pack 93 ft bgs

QA/QC: CMC
Date: 12/22/05

ELEVATION DATA

Stake Elevation	52.03
Datum Differential	–
Adjusted Stake Elevation	~52
Vertical Offset to Stake	—
Ground Elevation at Well	~52
Planned Screen Elevation	-16 TO -36
Screen Interval (Depth)	68 TO 88

SURGE/DEPTH RECORD

TD Inside Well Before Surging	89 TOC
Top of Sand Before Surging	67
Surge Time	15 min
Top of Sand After Surging	67
Distance Sand Dropped	0
DTW Inside Well After Surging	~65
TD Inside Well After Surging	89.5 TOC

DTW ~65' ADJUST DOWN 70-90

2-inch diameter SCH-40 Blank casing

Top of screen 70 ft bgs
0.020 - inch Machine Sotted Screen
2-inch diameter, High Flow
SCH - 40 PVC
Screen Length 20 ft
Bottom of Screen 90 ft bgs

6-inch long Threaded End Cap
Bottom of Cap 90.5 ft bgs

~~Collapsed Native Material~~ NONE

Total Depth of Borehole 93 ft bgs
14:15

COMMENTS

Haley & Aldrich, Inc.
20040602_Well Construction Record Form VER 3.xls

1 December 2004

HALEY & ALDRICH

Well Construction Record
Parcel C Remediation Well Installation Program
Former Boeing C-6 Site
Los Angeles, California

Well ID: AW0042L
Start Date/Time: 6-20-05 /1500
Finish Date/Time: 6-21-05 /1630
Driller/Rig: WDC/CME 85/Ted Nichol
Geologist: G. Androsko
Amendment Well Stick-up Height (minimum 24-in) 52 inches AGS
4.3

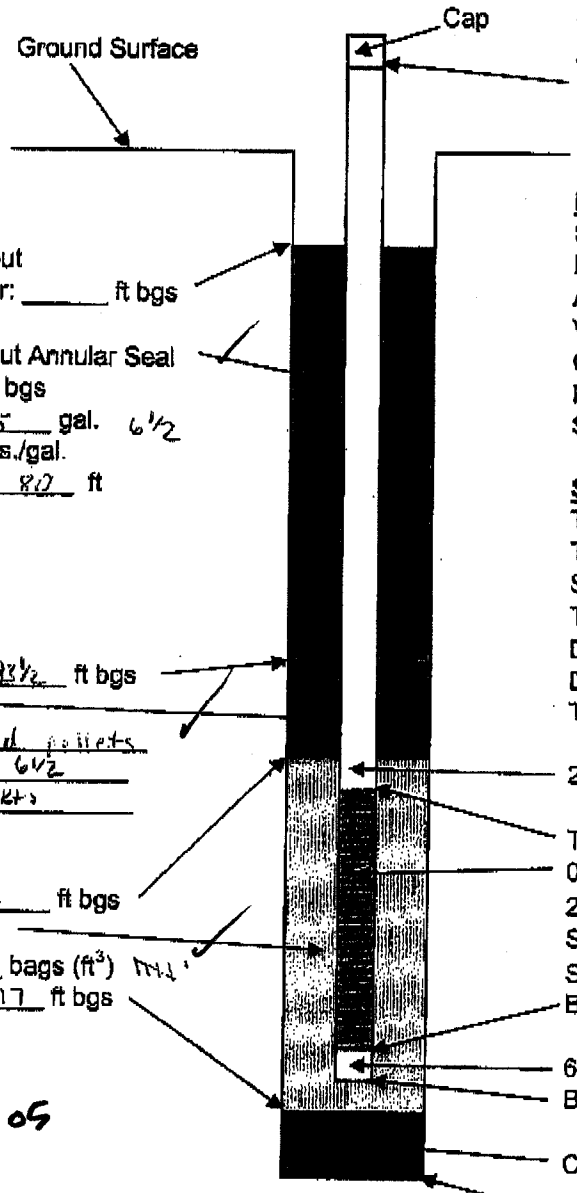

Cement/Bentonite Grout
Top of grout after 24 hr: _____ ft bgs

Cement/Bentonite Grout Annular Seal
Filled to 1 ft bgs
Volume Placed 325 gal. 6½
Density 15 lbs./gal.
Tremie Pipe Length 80 ft

Top of bentonite seal 83½ ft bgs
Bentonite Seal
Type 1/4" Coated pellets
Thickness (5 ft min) 6½
Volume Placed: 3 Bkts

Top of filter pack 90 ft bgs
No.3 Sand Filter Pack
Volume Placed 5½ bags (ft³) 114'
Bottom of filter pack 117 ft bgs

QA/QC: CME
Date: 6-22-05

8-inch diameter borehole

ELEVATION DATA

Stake Elevation	50.36
Datum Differential	NA
Adjusted Stake Elevation	50.36
Vertical Offset to Stake	NA
Ground Elevation at Well	50.36
Planned Screen Elevation	-45 to -65
Screen Interval (Depth)	95½ to 115½

SURGE/DEPTH RECORD

TD Inside Well Before Surging	119.9 (70c)
Top of Sand Before Surging	90
Surge Time	15 min
Top of Sand After Surging	91
Distance Sand Dropped	1
DTW Inside Well After Surging	66.52
TD Inside Well After Surging	

2-inch diameter SCH-40 Blank casing

Top of screen 96 ft bgs
0.020 - inch Machine Sotted Screen
2-inch diameter, High Flow
SCH - 80 PVC
Screen Length 20 ft
Bottom of Screen 116 ft bgs

6-inch long Threaded End Cap
Bottom of Cap 116½ ft bgs

Collapsed Native Material

Total Depth of Borehole ~~116½~~ 117 ft bgs 6-21-05 ~~@0815~~ @1240

COMMENTS

1555 Stopped drilling for the day @ 90'
6-21-05 1000 Pellets bridged - pulled casing out started over

Haley & Aldrich, Inc.
20040602_Well Construction Record Form VER 3.xls

1 December 2004

HALEY & ALDRICH

Well Construction Record
Parcel C Remediation Well Installation Program
Former Boeing C-6 Site
Los Angeles, California

Well ID: AW0027B
Start Date/Time: TU 6/21/05 1330
Finish Date/Time: TU 6/21/05 1640
Driller/Rig: IGNACIO GUTIERREZ CME-75
Geologist: T. HAMMOND
Amendment Well Stick-up Height (minimum 24-in) _____ inches AGS

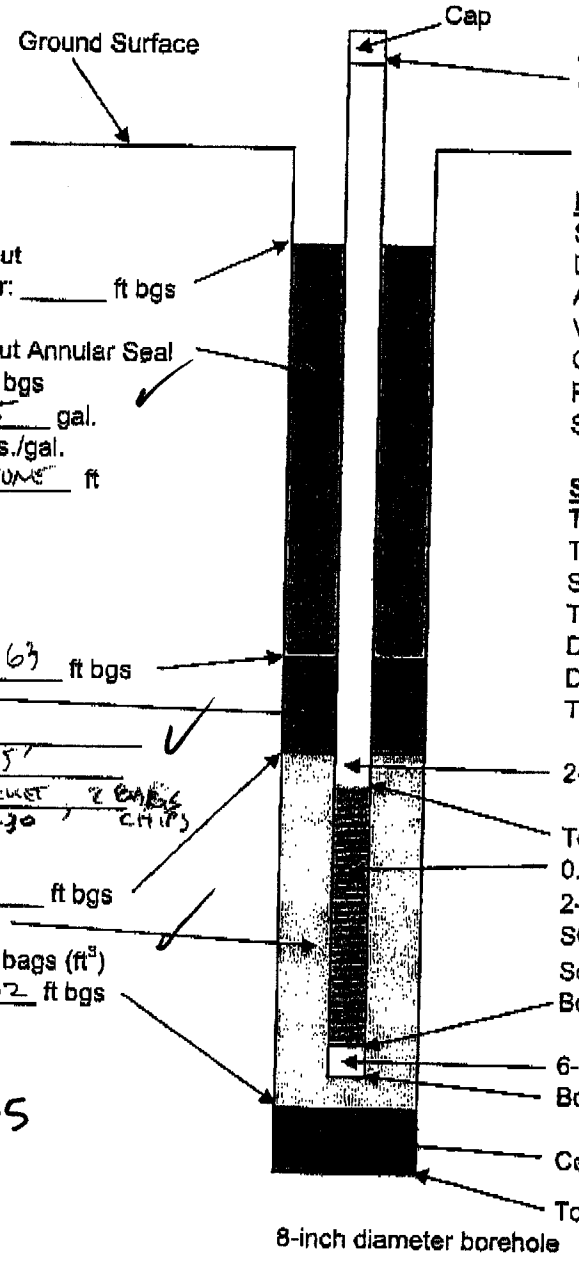

Cement/Bentonite Grout
Top of grout after 24 hr: _____ ft bgs

Cement/Bentonite Grout Annular Seal
Filled to 0 ft bgs
Volume Placed 225 gal.
Density 15 lbs./gal.
Tremie Pipe Length NONE ft

Top of bentonite seal 63 ft bgs
Bentonite Seal
Type _____
Thickness (5 ft min) 5'
Volume Placed: 1 BUCKET TK-30, 2 BAGS CHIPS

Top of filter pack 68 ft bgs
No.3 Sand Filter Pack
Volume Placed 9 bags (ft^3)
Bottom of filter pack 102 ft bgs

QA/QC: CMC
Date: 10-22-05

ELEVATION DATA

Stake Elevation	51.37
Datum Differential	—
Adjusted Stake Elevation	51.37
Vertical Offset to Stake	—
Ground Elevation at Well	51.37
Planned Screen Elevation	-18 to -46
Screen Interval (Depth)	67.5 to 97.5

DTW ~ 65' ADJUST DOWN 70-102

SURGE/DEPTH RECORD

TD Inside Well Before Surging	100 TOC
Top of Sand Before Surging	70'
Surge Time	15 min
Top of Sand After Surging	72
Distance Sand Dropped	2
DTW Inside Well After Surging	~65
TD Inside Well After Surging	98

2-inch diameter SCH-40 Blank casing

Top of screen 67.5 ft bgs
0.020 - inch Machine Sotted Screen
2-inch diameter, High Flow
SCH - 40 PVC
Screen Length 30 ft
Bottom of Screen 97.5 ft bgs

6-inch long Threaded End Cap
Bottom of Cap 102 ft bgs

~~Collapsed Native Material~~ NONE

Total Depth of Borehole 102 ft bgs
14:00

COMMENTS

Haley & Aldrich, Inc.
20040602_Well Construction Record Form VER 3.xls

1 December 2004

HALEY & ALDRICH

Well Construction Record
Parcel C Remediation Well Installation Program
Former Boeing C-6 Site
Los Angeles, California

Well ID: AW0031C
Start Date/Time: W 6/22/05 7:30
Finish Date/Time: W 6/22/ 12:00
Driller/Rig: RUBEN LARES CME-95
Geologist: T. HAMMOND
Amendment Well Stick-up Height (minimum 24-in) _____ inches AGS

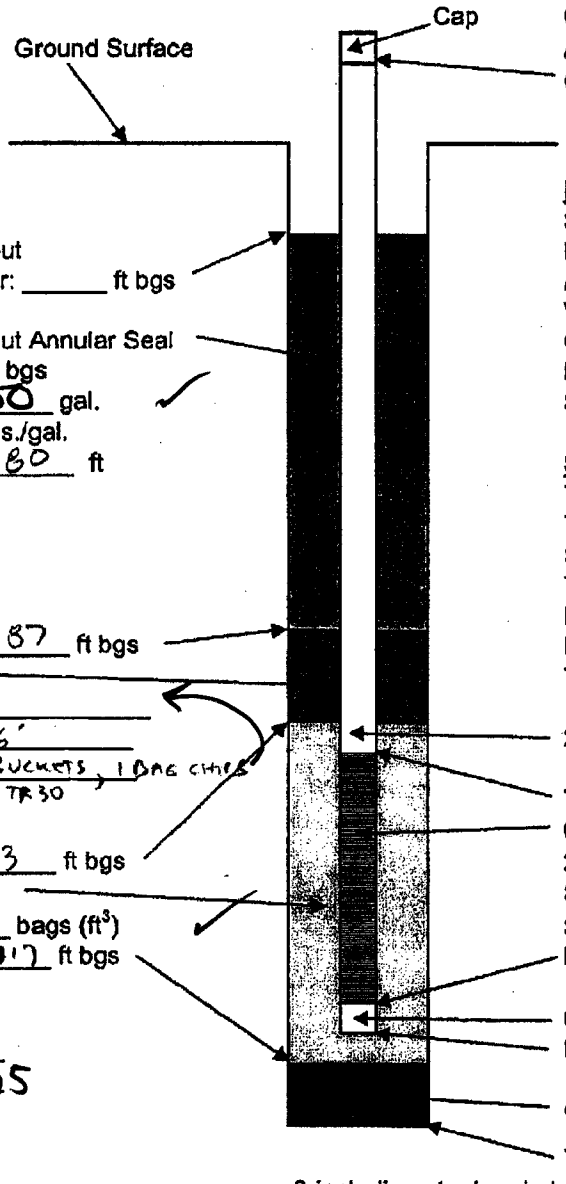

Cement/Bentonite Grout
Top of grout after 24 hr: _____ ft bgs

Cement/Bentonite Grout Annular Seal
Filled to 1 ft bgs
Volume Placed 200 gal.
Density 15 lbs./gal.
Tremie Pipe Length 80 ft

Top of bentonite seal 87 ft bgs
Bentonite Seal
Type _____
Thickness (5 ft min) 6'
Volume Placed: 2 BUCKETS, 1 BAG CHIPS TR 30

Top of filter pack 93 ft bgs
No.3 Sand Filter Pack
Volume Placed 7 bags (ft^3)
Bottom of filter pack 117 ft bgs

QA/QC: CMC
Date: 6-23-05

ELEVATION DATA

Stake Elevation	50.87
Datum Differential	—
Adjusted Stake Elevation	~51
Vertical Offset to Stake	—
Ground Elevation at Well	~51
Planned Screen Elevation	-45 TO -65
Screen Interval (Depth)	96 TO 116

SURGE/DEPTH RECORD

TD Inside Well Before Surging	117.4 TOC
Top of Sand Before Surging	93
Surge Time	15 min
Top of Sand After Surging	94
Distance Sand Dropped	1
DTW Inside Well After Surging	—
TD Inside Well After Surging	115 TOC

2-inch diameter SCH-40 Blank casing

Top of screen 96 ft bgs
0.020 - inch Machine Sotted Screen
2-inch diameter, High Flow
SCH - 80 PVC
Screen Length 20 ft
Bottom of Screen 116 ft bgs

6-inch long Threaded End Cap
Bottom of Cap 116.5 ft bgs

Collapsed Native Material 117-120

Total Depth of Borehole 120 ft bgs
8 40

COMMENTS

Haley & Aldrich, Inc.
20040802_Well Construction Record Form VER 3.xls

1 December 2004

HALEY & ALDRICH

Well Construction Record
Parcel C Remediation Well Installation Program
Former Boeing C-6 Site
Los Angeles, California

Well ID: AW0037C
Start Date/Time: TU 6/21/05 17:00
Finish Date/Time: 6-22-05 1245
Driller/Rig: TED NICHOLS CME-95
Geologist: G. Androsko
Amendment Well Stick-up Height (minimum 24-in) 51 inches AGS

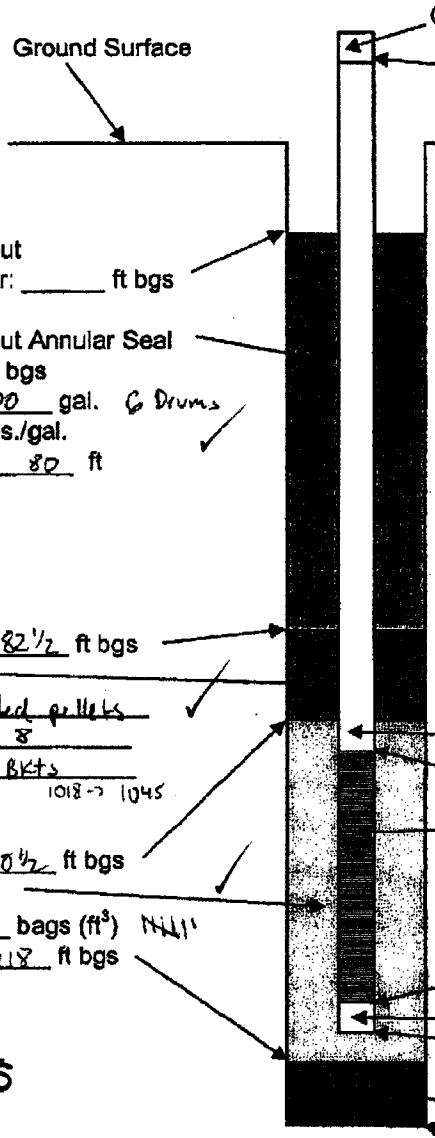

Cement/Bentonite Grout
Top of grout after 24 hr: _____ ft bgs

Cement/Bentonite Grout Annular Seal
Filled to 1 ft bgs
Volume Placed 300 gal. 6 Drums
Density 15 lbs./gal.
Tremie Pipe Length 80 ft

Top of bentonite seal 82½ ft bgs
Bentonite Seal
Type 1/4" Coated pellets
Thickness (5 ft min) 8
Volume Placed: 3 Bkts
1018 → 1045

Top of filter pack 90½ ft bgs
No.3 Sand Filter Pack
Volume Placed 6½ bags (ft³) MMI
Bottom of filter pack 118 ft bgs

QA/QC: CMA
Date: 6-23-05

ELEVATION DATA

Stake Elevation	50.72
Datum Differential	—
Adjusted Stake Elevation	50.72
Vertical Offset to Stake	—
Ground Elevation at Well	50.72
Planned Screen Elevation	-45 to -65
Screen Interval (Depth)	96 to 116

SURGE/DEPTH RECORD

TD Inside Well Before Surging	114
Top of Sand Before Surging	94
Surge Time	15 min
Top of Sand After Surging	96
Distance Sand Dropped	2
DTW Inside Well After Surging	66.98 TOC
TD Inside Well After Surging	119½

2-inch diameter SCH-40 Blank casing

Top of screen 96 ft bgs
0.020 - inch Machine Sotted Screen
2-inch diameter, High Flow
SCH - 80 PVC
Screen Length 20 ft
Bottom of Screen 116 ft bgs

6-inch long Threaded End Cap
Bottom of Cap 116 ft bgs

Collapsed Native Material

Total Depth of Borehole 119 ft bgs

COMMENTS

Haley & Aldrich, Inc.
20040502_Well Construction Record Form VER 3.xls

1 December 2004

HALEY & ALDRICH

Well Construction Record
Parcel C Remediation Well Installation Program
Former Boeing C-6 Site
Los Angeles, California

Well ID: AW0045B
Start Date/Time: 6-22-05 / 0735
Finish Date/Time: 6-22-05 / 1530
Driller/Rig: WDC/CME 75 / Miguel Alvarez
Geologist: G. Androsko
Amendment Well Stick-up Height (minimum 24-in) 48 inches AGS

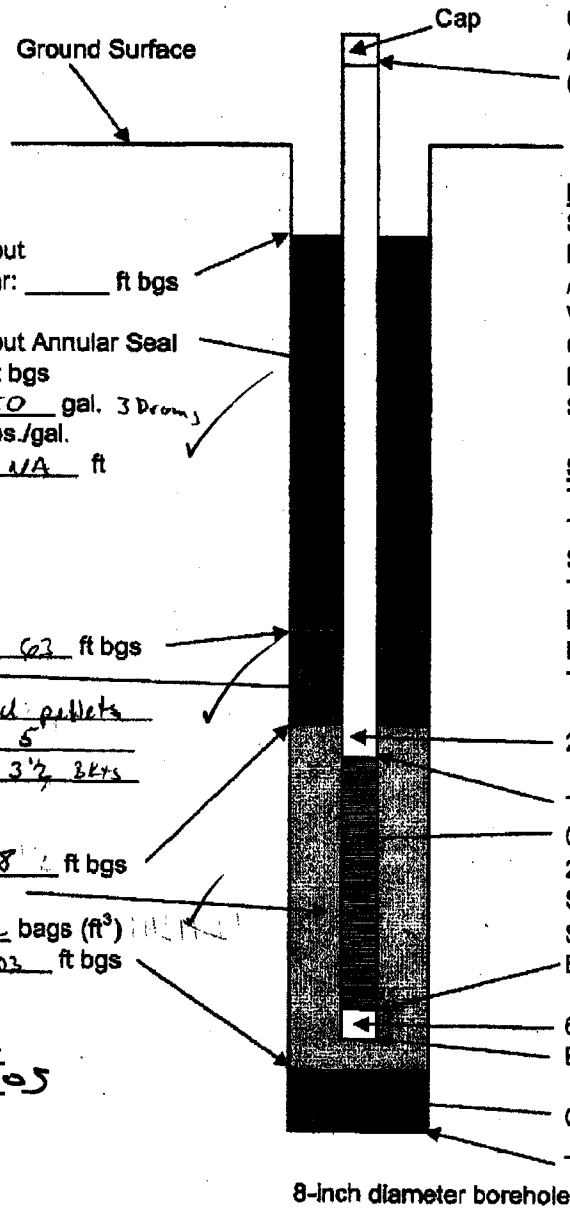

Cement/Bentonite Grout
Top of grout after 24 hr: _____ ft bgs

Cement/Bentonite Grout Annular Seal
Filled to 2 ft bgs
Volume Placed 150 gal. 3 Drums
Density 15 lbs./gal.
Tremie Pipe Length N/A ft

Top of bentonite seal 63 ft bgs
Bentonite Seal
Type 1/4" Coated pellets
Thickness (5 ft min) 5'
Volume Placed: 3 1/2 Bags

Top of filter pack 68 ft bgs
No.3 Sand Filter Pack
Volume Placed 10 bags (ft³)
Bottom of filter pack 103 ft bgs

QA/QC: CMC
Date: 6-23-05

ELEVATION DATA

Stake Elevation	53.18
Datum Differential	NA
Adjusted Stake Elevation	53.18
Vertical Offset to Stake	NA
Ground Elevation at Well	53.18
Planned Screen Elevation	-16 to -46
Screen Interval (Depth)	-69 to -99
	Adjusted down to -71 to -101

SURGE/DEPTH RECORD

TD Inside Well Before Surging	101 TOC
Top of Sand Before Surging	68
Surge Time	15 min
Top of Sand After Surging	68 1/2
Distance Sand Dropped	0.5
DTW Inside Well After Surging	67.20 TOC
TD Inside Well After Surging	103 1/2 TOC

2-inch diameter SCH-40 Blank casing

Top of screen 71 ft bgs
0.020 - inch Machine Sotted Screen
2-inch diameter, High Flow
SCH - 40 PVC
Screen Length 30 ft
Bottom of Screen 101 ft bgs

6-inch long Threaded End Cap
Bottom of Cap 101 1/2 ft bgs

Collapsed Native Material

Total Depth of Borehole 103 ft bgs @0850

COMMENTS

- Sand dropped 5' during surging - added sand back to 68' and surged again
- Chips bridged during sand placement - pulled well - redrilled
- Chips bridged again - broke through using jetted water and tremie pipe
- Pulled all the auger - hole open to 67' - added pellets to 63' - hydrated for 30 minutes and grouted through open borehole

HALEY & ALDRICH

Well Construction Record
Parcel C Remediation Well Installation Program
Former Boeing C-6 Site
Los Angeles, California

Well ID: AW0086B
Start Date/Time: w 6/22/05 1215
Finish Date/Time: w 6/22/05 1530
Driller/Rig: Ruben Lares CME-95
Geologist: T. Hammond

Amendment Well Stick-up Height (minimum 24-in) _____ inches AGS

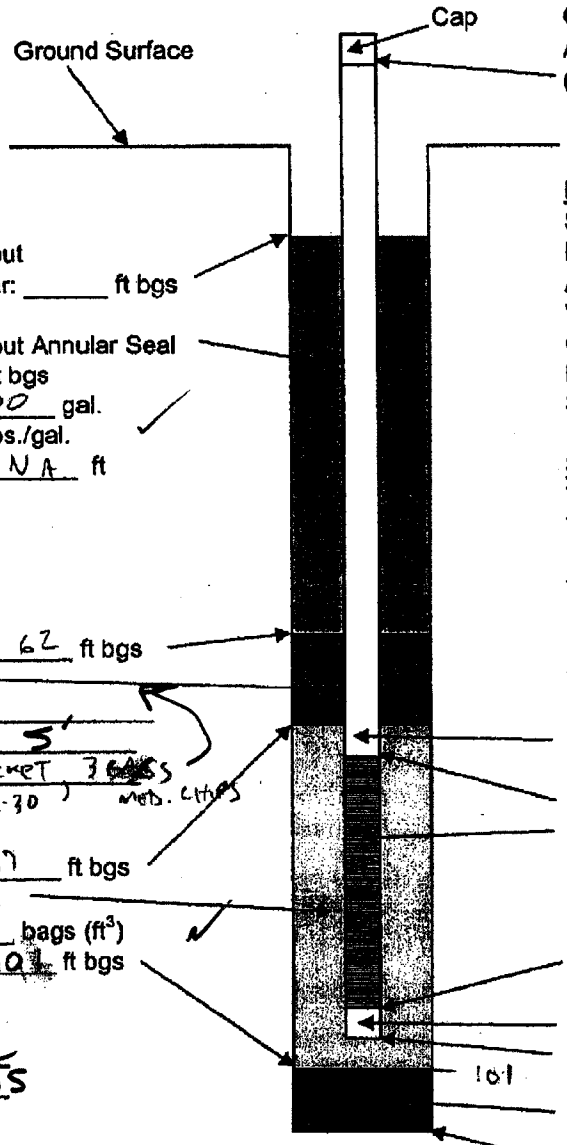

Cement/Bentonite Grout
Top of grout after 24 hr: _____ ft bgs

Cement/Bentonite Grout Annular Seal
Filled to 3 ft bgs
Volume Placed 200 gal.
Density 15 lbs./gal.
Tremie Pipe Length NA ft

Top of bentonite seal 62 ft bgs
Bentonite Seal
Type _____
Thickness (5 ft min) 5'
Volume Placed: 1 bucket TR-30, 3 bags mod. chips

Top of filter pack 67 ft bgs
No.3 Sand Filter Pack
Volume Placed 11 bags (ft^3)
Bottom of filter pack 102 ft bgs

QA/QC: CMC
Date: 6-23-05

ELEVATION DATA

Stake Elevation	51.44
Datum Differential	—
Adjusted Stake Elevation	51.44
Vertical Offset to Stake	—
Ground Elevation at Well	51.44
Planned Screen Elevation	-16 to -46
Screen Interval (Depth)	67.5 to 97.5

DTW ~65'
ADJUST DOWN ~ 70-100

SURGE/DEPTH RECORD

TD Inside Well Before Surging	98 TOC
Top of Sand Before Surging	67
Surge Time	15 min
Top of Sand After Surging	70
Distance Sand Dropped	3
DTW Inside Well After Surging	~65
TD Inside Well After Surging	99 TOC

2-inch diameter SCH-40 Blank casing

Top of screen 70 ft bgs
0.020 - Inch Machine Sotted Screen
2-inch diameter, High Flow
SCH - 40 PVC
Screen Length 30 ft
Bottom of Screen 100 ft bgs

6-inch long Threaded End Cap
Bottom of Cap 100.5 ft bgs

Collapsed Native Material 101 - 103

Total Depth of Borehole 103 ft bgs
13:20

8-inch diameter borehole

COMMENTS

HALEY & ALDRICH

Well Construction Record
Parcel C Remediation Well Installation Program
Former Boeing C-6 Site
Los Angeles, California

Well ID: AW0053UB
Start Date/Time: W 6/22/05 12:30
Finish Date/Time: W 6/22/05 16:30
Driller/Rig: JORGE GUTIERREZ CME
Geologist: THAMMOND

Amendment Well Stick-up Height (minimum 24-in) _____ inches AGS

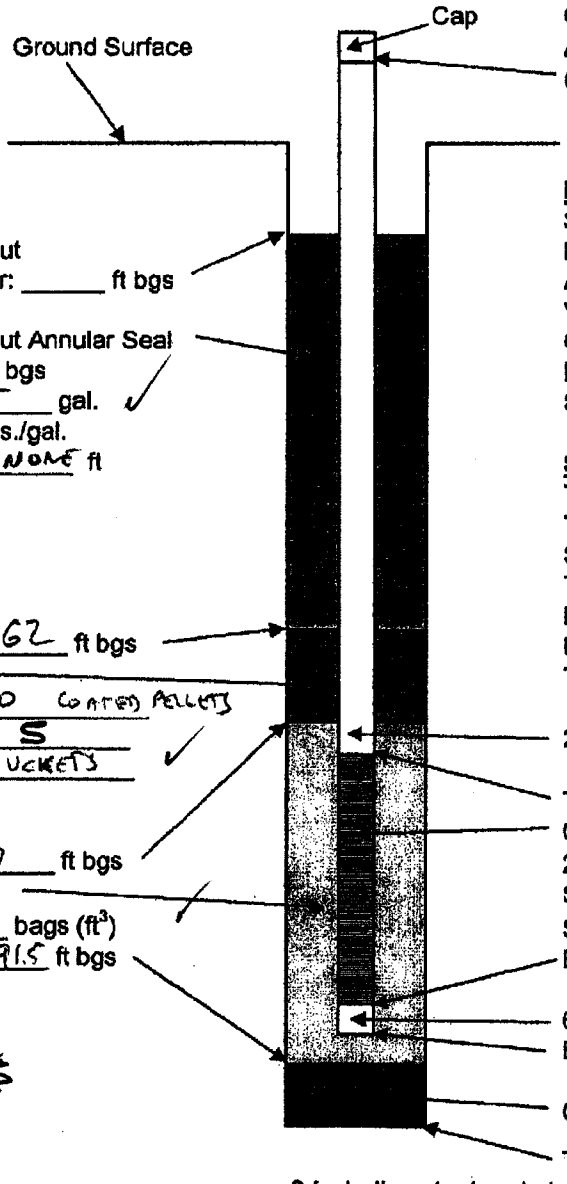

Cement/Bentonite Grout
Top of grout after 24 hr: _____ ft bgs

Cement/Bentonite Grout Annular Seal
Filled to D ft bgs
Volume Placed 225 gal.
Density 15 lbs./gal.
Tremie Pipe Length NONE ft

Top of bentonite seal 62 ft bgs
Bentonite Seal
Type 1/4" TR-30 COATED PELLETS
Thickness (5 ft min) 5
Volume Placed: 3 BUCKETS

Top of filter pack 67 ft bgs
No.3 Sand Filter Pack
Volume Placed 8.5 bags (ft³)
Bottom of filter pack 91.5 ft bgs

QA/QC: CMA
Date: 6-23-05

ELEVATION DATA

Stake Elevation	50.05
Datum Differential	—
Adjusted Stake Elevation	50.05
Vertical Offset to Stake	—
Ground Elevation at Well	50.05
Planned Screen Elevation	-16 to -36
Screen Interval (Depth)	66 to 86

DTW = 65'
ADJUST DOWN 70-9K

SURGE/DEPTH RECORD

TD Inside Well Before Surging	105 TOC
Top of Sand Before Surging	68
Surge Time	15 min
Top of Sand After Surging	69
Distance Sand Dropped	1
DTW Inside Well After Surging	—
TD Inside Well After Surging	103.5 TOC

2-inch diameter SCH-40 Blank casing

Top of screen 70 ft bgs
0.020 - inch Machine Sotted Screen
2-inch diameter, High Flow
SCH - 40 PVC
Screen Length 20 ft
Bottom of Screen 90 ft bgs

6-inch long Threaded End Cap
Bottom of Cap 90.5 ft bgs

Collapsed Native Material 91.5 -94

Total Depth of Borehole 94 ft bgs

COMMENTS

HALEY & ALDRICH

Well Construction Record
Parcel C Remediation Well Installation Program
Former Boeing C-6 Site
Los Angeles, California

Well ID: AW04 43B
Start Date/Time: 6-22-05 / 1345
Finish Date/Time: 6-22-05/1705
Driller/Rig: WDC/CME 95/Ted Nichols
Geologist: G. Androsko
Amendment Well Stick-up Height (minimum 24-in) 16 inches AGS

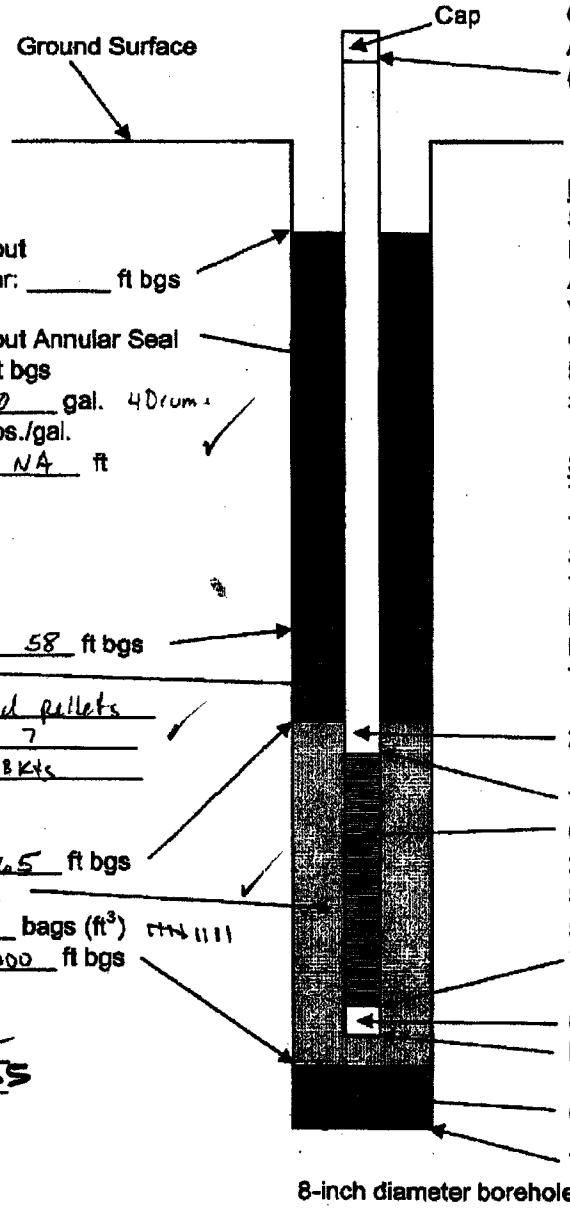

Cement/Bentonite Grout
Top of grout after 24 hr: _____ ft bgs

Cement/Bentonite Grout Annular Seal
Filled to 1 ft bgs
Volume Placed 200 gal. 4 Drums
Density 15 lbs./gal.
Tremie Pipe Length NA ft

Top of bentonite seal 58 ft bgs
Bentonite Seal
Type 1/4" Coated pellets
Thickness (5 ft min) 7
Volume Placed: 3 Bkts

Top of filter pack 65 ft bgs
No.3 Sand Filter Pack
Volume Placed 10 bags (ft³) ~~||||~~ ||||
Bottom of filter pack 100 ft bgs

ELEVATION DATA

Stake Elevation	50.43
Datum Differential	NA
Adjusted Stake Elevation	50.43
Vertical Offset to Stake	NA
Ground Elevation at Well	50.43
Planned Screen Elevation	-16 to -46
Screen Interval (Depth)	-66½ to -96½

Adjusted down to 68½ to 98½

SURGE/DEPTH RECORD

TD Inside Well Before Surging	98½
Top of Sand Before Surging	65
Surge Time	15
Top of Sand After Surging	68
Distance Sand Dropped	2
DTW Inside Well After Surging	64.03
TD Inside Well After Surging	

2-inch diameter SCH-40 Blank casing

Top of screen 68½ ft bgs
0.020 - inch Machine Sotted Screen
2-inch diameter, High Flow
SCH - 40 PVC
Screen Length 20 ft
Bottom of Screen 98½ ft bgs

6-inch long Threaded End Cap
Bottom of Cap 99 ft bgs

Collapsed Native Material

Total Depth of Borehole 100 ft bgs @1430

QA/QC: CMC
Date: 6-23-05

COMMENTS

- chips bridged - broke free + pulled auger - seal @ 58' - grouted through open hole

HALEY & ALDRICH

Well Construction Record
Parcel C Remediation Well Installation Program
Former Boeing C-6 Site
Los Angeles, California

Well ID: AW0032 B
Start Date/Time: W 6/22/05 1545
Finish Date/Time: Th 6/23/05 945
Driller/Rig: ROBERT LARES CME-
Geologist: T. HAMMOND
Amendment Well Stick-up Height (minimum 24-in) 5' inches AGS

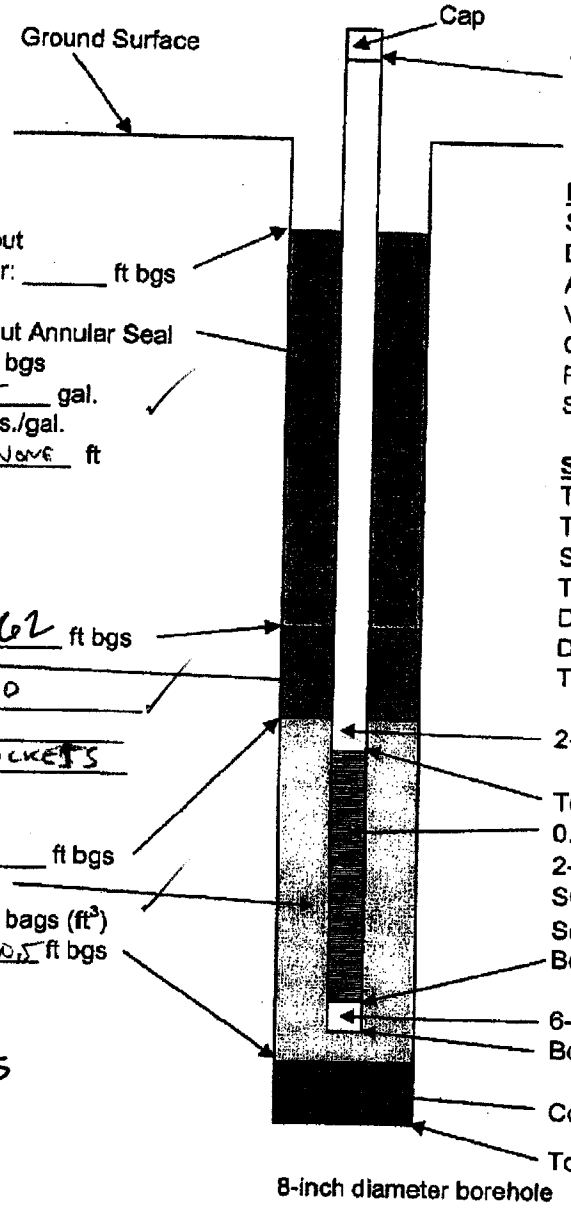

Cement/Bentonite Grout
Top of grout after 24 hr: _____ ft bgs

Cement/Bentonite Grout Annular Seal
Filled to 3 ft bgs
Volume Placed 225 gal.
Density 15 lbs./gal.
Tremie Pipe Length NONE ft

Top of bentonite seal 62 ft bgs
Bentonite Seal
Type 1/4" TR-30
Thickness (5 ft min) _____
Volume Placed: 3 BUCKETS

Top of filter pack 67 ft bgs
No.3 Sand Filter Pack
Volume Placed 9 bags (ft³)
Bottom of filter pack 100.5 ft bgs

QA/QC: CMC
Date: 6/27/05

ELEVATION DATA

Stake Elevation	51.16
Datum Differential	—
Adjusted Stake Elevation	51.16
Vertical Offset to Stake	—
Ground Elevation at Well	~51
Planned Screen Elevation	-16 TO -46
Screen Interval (Depth)	67 TO 97

DTW ≈ ~65
ADJUST DOWN 70-100

SURGE/DEPTH RECORD

TD Inside Well Before Surging	98.5 TOC
Top of Sand Before Surging	67
Surge Time	15 min
Top of Sand After Surging	69.5
Distance Sand Dropped	1.5
DTW Inside Well After Surging	—
TD Inside Well After Surging	99.5 TOC

2-inch diameter SCH-40 Blank casing

Top of screen 70 ft bgs
0.020 - Inch Machine Sotted Screen
2-inch diameter, High Flow
SCH - 40 PVC
Screen Length 30 ft
Bottom of Screen 100 ft bgs

6-inch long Threaded End Cap
Bottom of Cap 100.5 ft bgs

Collapsed Native Material 100.5 - 103

Total Depth of Borehole 103 ft bgs

COMMENTS

Haley & Aldrich, Inc.
20040602_Well Construction Record Form VER 3.xls

1 December 2004

HALEY & ALDRICH

Well Construction Record
Parcel C Remediation Well Installation Program
Former Boeing C-6 Site
Los Angeles, California

Well ID: AW~~00~~44B
Start Date/Time: 6-22-05 / 1615
Finish Date/Time: 6-23-05 / 1040
Driller/Rig: WDC/CME75/Miguel Alvara
Geologist: G. Androsko
Amendment Well Stick-up Height (minimum 24-in) 43 inches AGS

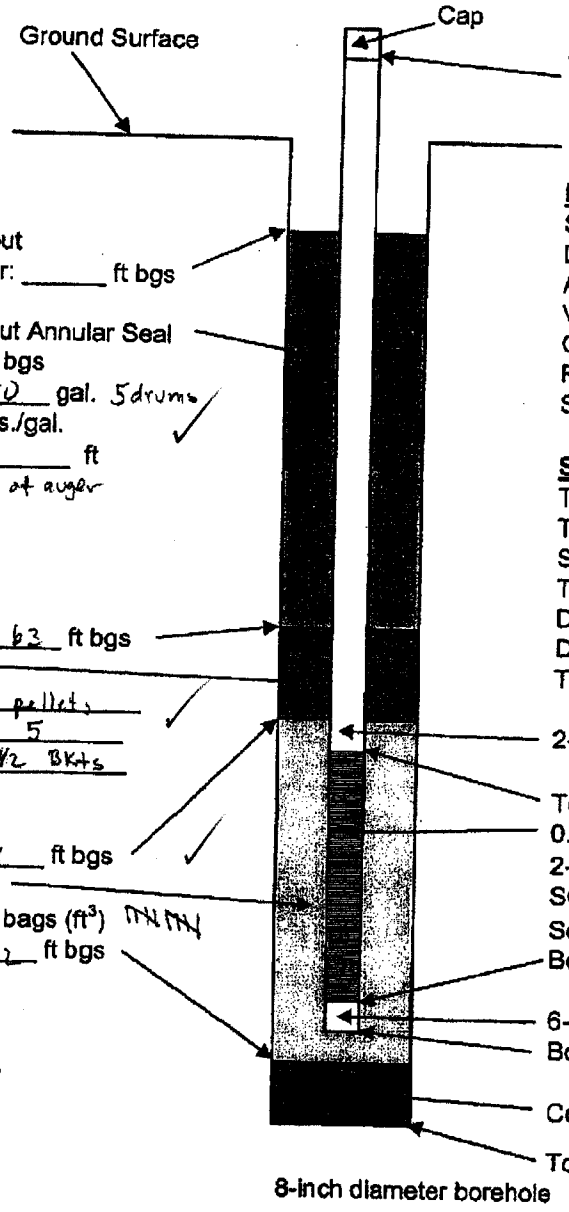

Cement/Bentonite Grout
Top of grout after 24 hr: _____ ft bgs

Cement/Bentonite Grout Annular Seal
Filled to 1 ft bgs
Volume Placed 250 gal. 5 drums
Density 15 lbs./gal.
Tremie Pipe Length _____ ft
Used center of auger

Top of bentonite seal 63 ft bgs
Bentonite Seal
Type 1/4" Coated pellets
Thickness (5 ft min) 5
Volume Placed: 3 1/2 Bkts

Top of filter pack 68 ft bgs
No.3 Sand Filter Pack
Volume Placed 10 1/2 bags (ft³)
Bottom of filter pack 102 ft bgs

QA/QC: CML
Date: 10-27-05

ELEVATION DATA

Stake Elevation	~51.79
Datum Differential	NA
Adjusted Stake Elevation	51.79
Vertical Offset to Stake	NA
Ground Elevation at Well	51.79
Planned Screen Elevation	-16 to -46
Screen Interval (Depth)	68 to 98

Adjusted down to 70 to 100

SURGE/DEPTH RECORD

TD Inside Well Before Surging	103 70C
Top of Sand Before Surging	68
Surge Time	15 min
Top of Sand After Surging	71
Distance Sand Dropped	3
DTW Inside Well After Surging	67.93
TD Inside Well After Surging	103 70C

2-inch diameter SCH-40 Blank casing

Top of screen 71 ft bgs
0.020 - inch Machine Sotted Screen
2-inch diameter, High Flow
SCH - 40 PVC
Screen Length 30 ft
Bottom of Screen 101 ft bgs

6-inch long Threaded End Cap
Bottom of Cap 102 ft bgs

Collapsed Native Material NONE

Total Depth of Borehole 102 ft bgs @ 6-23-05 0805

COMMENTS

Haley & Aldrich, Inc.
20040602_Well Construction Record Form VER 3.xls

1 December 2004

HALEY & ALDRICH

Well Construction Record
Parcel C Remediation Well Installation Program
Former Boeing C-6 Site
Los Angeles, California

Well ID: AW00526
Start Date/Time: 6-23-05/0740
Finish Date/Time: 6-23-05/1250
Driller/Rig: WDC/CME 95/Ted Nichols
Geologist: G. Andrusko
Amendment Well Stick-up Height (minimum 24-in) 52 inches AGS

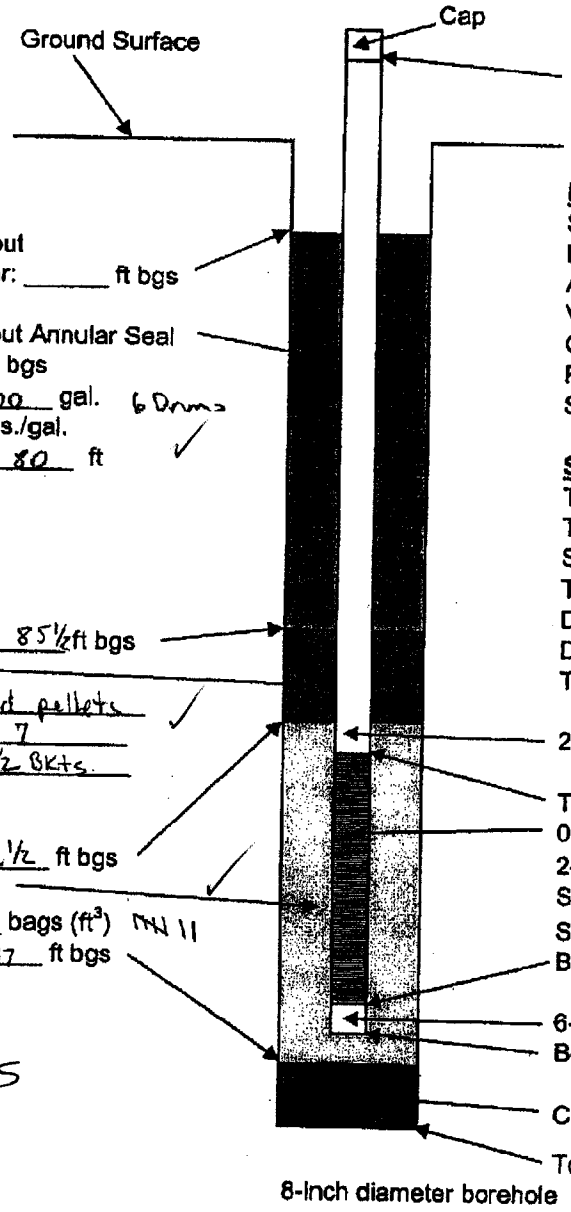

Cement/Bentonite Grout
Top of grout after 24 hr: _____ ft bgs

Cement/Bentonite Grout Annular Seal
Filled to 2 ft bgs
Volume Placed 300 gal. 6 Drums
Density 15 lbs./gal.
Tremie Pipe Length 80 ft

Top of bentonite seal 85½ ft bgs
Bentonite Seal
Type 1/4" Coated pellets
Thickness (5 ft min) 7
Volume Placed: 2½ Bkts.

Top of filter pack 92½ ft bgs
No.3 Sand Filter Pack
Volume Placed 7½ bags (ft³) MW 11
Bottom of filter pack 117 ft bgs

QA/QC: CMC
Date: 6-27-05

ELEVATION DATA

Stake Elevation	50.32
Datum Differential	NA
Adjusted Stake Elevation	50.32
Vertical Offset to Stake	NA
Ground Elevation at Well	50.32
Planned Screen Elevation	-45 to -65
Screen Interval (Depth)	95 to 115

SURGE/DEPTH RECORD

TD Inside Well Before Surging	115½
Top of Sand Before Surging	90½
Surge Time	15 min
Top of Sand After Surging	93
Distance Sand Dropped	2½
DTW Inside Well After Surging	66.92
TD Inside Well After Surging	115½

2-inch diameter SCH-40 Blank casing

Top of screen 95½ ft bgs
0.020 - inch Machine Sotted Screen
2-inch diameter, High Flow
SCH - 80 PVC
Screen Length 20 ft
Bottom of Screen 115½ ft bgs

6-inch long Threaded End Cap
Bottom of Cap 116 ft bgs

Collapsed Native Material 117 - 117.5

Total Depth of Borehole 117½ ft bgs

COMMENTS

Haley & Aldrich, Inc.
20040602_Well Construction Record Form VER 3.xls

1 December 2004

HALEY & ALDRICH

Well Construction Record
Parcel C Remediation Well Installation Program
Former Boeing C-6 Site
Los Angeles, California

Well ID: AW00B7C
Start Date/Time: Th 6/23/05 1000
Finish Date/Time: Th 6/23/05 1415
Driller/Rig: RUBEN LARES CME-95
Geologist: T. HAMMOND

Amendment Well Stick-up Height (minimum 24-in) _____ inches AGS

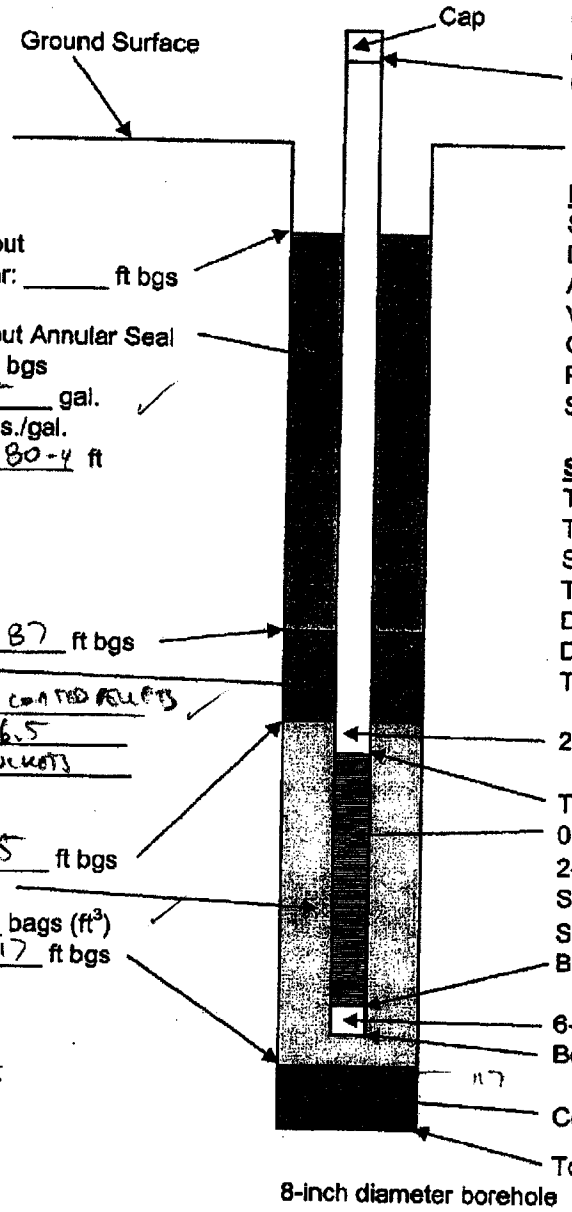

Cement/Bentonite Grout
Top of grout after 24 hr: _____ ft bgs

Cement/Bentonite Grout Annular Seal
Filled to 4 ft bgs
Volume Placed 275 gal.
Density 15 lbs./gal.
Tremie Pipe Length 80-4 ft

Top of bentonite seal 87 ft bgs
Bentonite Seal
Type 1/4" TR 30 COATED PELLETS
Thickness (5 ft min) 6.5
Volume Placed: 30 BUCKETS

Top of filter pack 93.5 ft bgs
No.3 Sand Filter Pack
Volume Placed 7.5 bags (ft³)
Bottom of filter pack 117 ft bgs

QA/QC: CMC
Date: 6-27-05

ELEVATION DATA

Stake Elevation	51.55
Datum Differential	—
Adjusted Stake Elevation	51.55
Vertical Offset to Stake	—
Ground Elevation at Well	~51.5
Planned Screen Elevation	-45 TO -65
Screen Interval (Depth)	96.5 TO 116.5

SURGE/DEPTH RECORD

TD Inside Well Before Surging	118
Top of Sand Before Surging	93
Surge Time	15 MIN
Top of Sand After Surging	95
Distance Sand Dropped	2
DTW Inside Well After Surging	—
TD Inside Well After Surging	119

2-inch diameter SCH-40 Blank casing

Top of screen 96.5 ft bgs
0.020 - inch Machine Sotted Screen
2-inch diameter, High Flow
SCH - 80 PVC
Screen Length 20 ft
Bottom of Screen 116.5 ft bgs

6-inch long Threaded End Cap
Bottom of Cap 117 ft bgs

Collapsed Native Material 117 - 120

Total Depth of Borehole 120 ft bgs

COMMENTS

Haley & Aldrich, Inc.
20040602_Well Construction Record Form VER 3.xls

1 December 2004

HALEY & ALDRICH

Well Construction Record
Parcel C Remediation Well Installation Program
Former Boeing C-6 Site
Los Angeles, California

Well ID: AW 00 54 UB
Start Date/Time: 6-23-05 / 1115
Finish Date/Time: 6-23-05 / 1510
Driller/Rig: WDC/CME75/Miguel Alvarad
Geologist: G. Androsko
Amendment Well Stick-up Height (minimum 24-in) 69 inches AGS

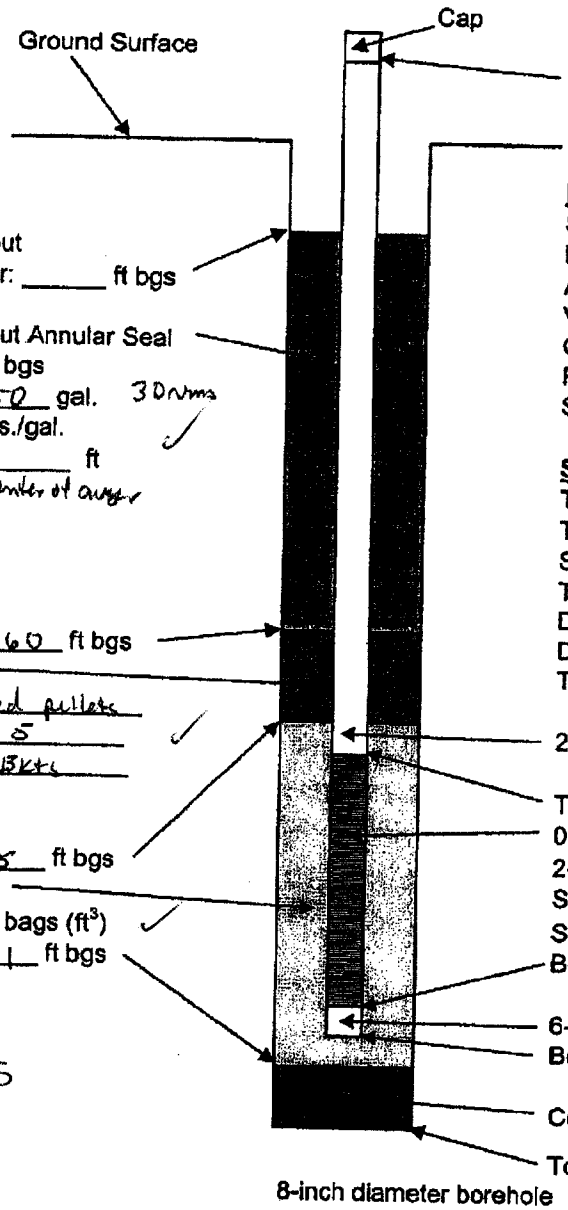

Cement/Bentonite Grout
Top of grout after 24 hr: _____ ft bgs

Cement/Bentonite Grout Annular Seal
Filled to 4 ft bgs
Volume Placed 150 gal. 30 Nms
Density 15 lbs./gal.
Tremie Pipe Length _____ ft
used center of auger

Top of bentonite seal 60 ft bgs
Bentonite Seal
Type 1/4" Coated pellets
Thickness (5 ft min) 5
Volume Placed: 3 Bkts

Top of filter pack 65 ft bgs
No.3 Sand Filter Pack
Volume Placed 7 bags (ft³)
Bottom of filter pack 91 ft bgs

QA/QC: [signature]
Date: 6-27-05

ELEVATION DATA

Stake Elevation	50.73
Datum Differential	NA
Adjusted Stake Elevation	50.73
Vertical Offset to Stake	NA
Ground Elevation at Well	50.73
Planned Screen Elevation	-16 to -36
Screen Interval (Depth)	66½ to 86½

Adjusted down to 68½ to 88½

SURGE/DEPTH RECORD

TD Inside Well Before Surging	93 TOC
Top of Sand Before Surging	64
Surge Time	15 min
Top of Sand After Surging	66½
Distance Sand Dropped	2½
DTW Inside Well After Surging	69.79
TD Inside Well After Surging	93

2-inch diameter SCH-40 Blank casing

Top of screen 68½ ft bgs
0.020 - inch Machine Sotted Screen
2-inch diameter, High Flow
SCH - 40 PVC
Screen Length 20 ft
Bottom of Screen 88½ ft bgs

6-inch long Threaded End Cap
Bottom of Cap 89 ft bgs

Collapsed Native Material 89-91

Total Depth of Borehole 91 ft bgs

8-inch diameter borehole

COMMENTS

- Moved location ~3' west of pin to maintain 5' min from AW00 54C

HALEY & ALDRICH

Well Construction Record
Parcel C Remediation Well Installation Program
Former Boeing C-6 Site
Los Angeles, California

Well ID: AW 00 51UB
Start Date/Time: 6-23-05 / 1345
Finish Date/Time: 6-23-05 / 1615
Driller/Rig: WDC/CmE85/Ted Nichols
Geologist: C. Androsko
Amendment Well Stick-up Height (minimum 24-in) 16 inches AGS

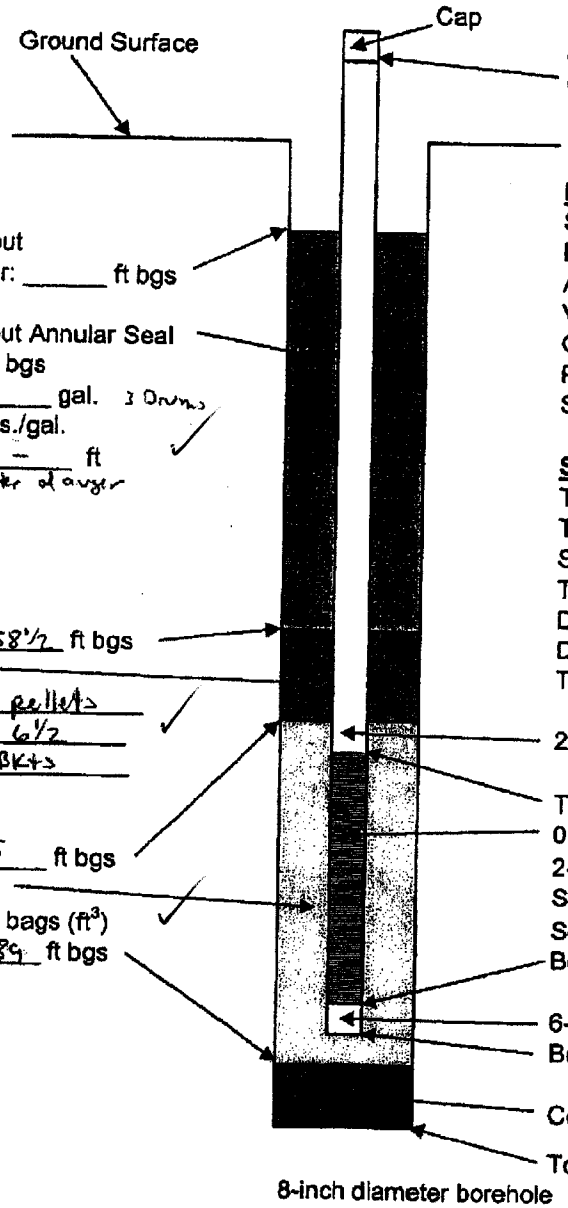

Cement/Bentonite Grout
Top of grout after 24 hr: _____ ft bgs

Cement/Bentonite Grout Annular Seal
Filled to 5 ft bgs
Volume Placed 150 gal. 3 Drums
Density 15 lbs./gal.
Tremie Pipe Length – ft
Used center of auger

Top of bentonite seal 58½ ft bgs
Bentonite Seal
Type 1/4" Coated pellets
Thickness (5 ft min) 6½
Volume Placed: 3 Bkts

Top of filter pack 65 ft bgs
No.3 Sand Filter Pack
Volume Placed 6½ bags (ft³)
Bottom of filter pack 89 ft bgs

QA/QC: CMC
Date: 6-27-05

ELEVATION DATA

Stake Elevation	50.65
Datum Differential	NA
Adjusted Stake Elevation	50.65
Vertical Offset to Stake	NA
Ground Elevation at Well	50.65
Planned Screen Elevation	-16 to -36
Screen Interval (Depth)	66½ to 86½

Adjusted down to 68½ to 88½

SURGE/DEPTH RECORD

TD Inside Well Before Surging	88½
Top of Sand Before Surging	94
Surge Time	15min
Top of Sand After Surging	95
Distance Sand Dropped	1
DTW Inside Well After Surging	64.15
TD Inside Well After Surging	88½

2-inch diameter SCH-40 Blank casing

Top of screen 68½ ft bgs
0.020 - inch Machine Sotted Screen
2-inch diameter, High Flow
SCH - 40 PVC
Screen Length 20 ft
Bottom of Screen 88½ ft bgs

6-inch long Threaded End Cap
Bottom of Cap 89 ft bgs

Collapsed Native Material 89 - 91

Total Depth of Borehole 91 ft bgs

COMMENTS

Haley & Aldrich, Inc.
20040602_Well Construction Record Form VER 3.xls

1 December 2004

HALEY & ALDRICH

Well Construction Record
Parcel C Remediation Well Installation Program
Former Boeing C-6 Site
Los Angeles, California

Well ID: AW0029UB
Start Date/Time: Th 6/23/05 1430
Finish Date/Time: F 6/24/05 915
Driller/Rig: RUBEN LARES CME-95
Geologist: TRAVIS HAMMOND

Amendment Well Stick-up Height (minimum 24-in) _____ inches AGS

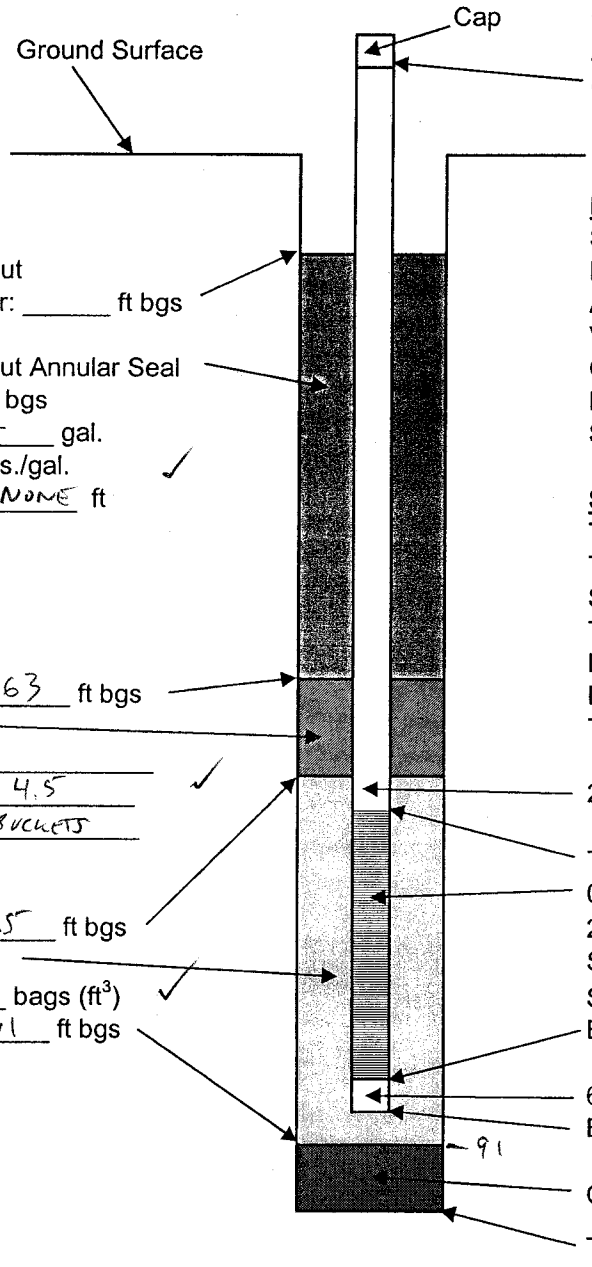

Cement/Bentonite Grout
Top of grout after 24 hr: _____ ft bgs

Cement/Bentonite Grout Annular Seal
Filled to 2 ft bgs
Volume Placed 225 gal.
Density 15 lbs./gal. ✓
Tremie Pipe Length NONE ft

Top of bentonite seal 63 ft bgs
Bentonite Seal
Type 1/4" TR-30
Thickness (5 ft min) 4.5 ✓
Volume Placed: 3 BUCKETS

Top of filter pack 67.5 ft bgs
No.3 Sand Filter Pack
Volume Placed 7 bags (ft^3) ✓
Bottom of filter pack 91 ft bgs

QA/QC: CML
Date: 6-27-05

ELEVATION DATA

Stake Elevation	~50.5
Datum Differential	—
Adjusted Stake Elevation	—
Vertical Offset to Stake	—
Ground Elevation at Well	~50.5 ✓
Planned Screen Elevation	-16 to -36
Screen Interval (Depth)	66.5 to 96.5

DTW = 65'
ADJUST DOWN 70-90

SURGE/DEPTH RECORD

TD Inside Well Before Surging	91 (TOC - 95' (AMMC))
Top of Sand Before Surging	67
Surge Time	15 min
Top of Sand After Surging	67.5
Distance Sand Dropped	0.5
DTW Inside Well After Surging	
TD Inside Well After Surging	

2-inch diameter SCH-40 Blank casing

Top of screen 70.5 ft bgs
0.020 - inch Machine Sotted Screen
2-inch diameter, High Flow
SCH - 40 PVC ✓
Screen Length 20 ft
Bottom of Screen 90.5 ft bgs

6-inch long Threaded End Cap
Bottom of Cap 91 ft bgs

Collapsed Native Material 91 - 93 ✓

Total Depth of Borehole 93 ft bgs

COMMENTS

Haley & Aldrich, Inc.
20040602_Well Construction Record Form VER 3.xls

1 December 2004

HALEY & ALDRICH

Well Construction Record
Parcel C Remediation Well Installation Program
Former Boeing C-6 Site
Los Angeles, California

Well ID: AW0030B
Start Date/Time: 6-23-05 / 1535
Finish Date/Time: 6-24-05 / 1100
Driller/Rig: WDC/CME 75/ Miguel Alvarado
Geologist: G. Androsko
Amendment Well Stick-up Height (minimum 24-in) 72 inches AGS

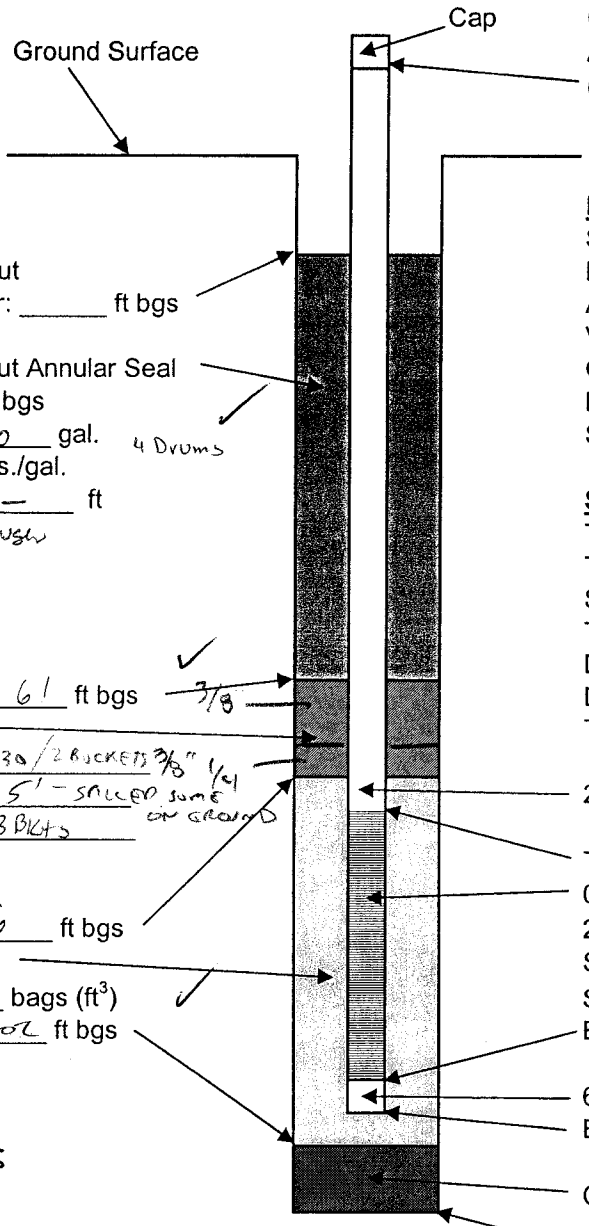

Cement/Bentonite Grout
Top of grout after 24 hr: _____ ft bgs

Cement/Bentonite Grout Annular Seal
Filled to 3 ft bgs
Volume Placed 200 gal. 4 Drums
Density 15 lbs./gal.
Tremie Pipe Length — ft
Used Center of auger

Top of bentonite seal 61 ft bgs 3/8
Bentonite Seal
Type 1 BUCKET 1/4" TR-30 / 2 BUCKETS 3/8" 1/4
Thickness (5 ft min) 5' - SPLICED SOME ON GROUND
Volume Placed: 3 BKTS

Top of filter pack 66 ft bgs
No.3 Sand Filter Pack
Volume Placed 9.5 bags (ft^3)
Bottom of filter pack 102 ft bgs

QA/QC: CMC
Date: 6-27-05

ELEVATION DATA

Stake Elevation	50.82
Datum Differential	NA
Adjusted Stake Elevation	50.82
Vertical Offset to Stake	NA
Ground Elevation at Well	50.82
Planned Screen Elevation	-16 to -46
Screen Interval (Depth)	-67 to -97 Adjusted down to -69 to -99

SURGE/DEPTH RECORD

TD Inside Well Before Surging	103 (TOC)
Top of Sand Before Surging	68
Surge Time	15 min
Top of Sand After Surging	71
Distance Sand Dropped	3
DTW Inside Well After Surging	~65
TD Inside Well After Surging	103 TOC

2-inch diameter SCH-40 Blank casing

Top of screen 69 ft bgs
0.020 - inch Machine Sotted Screen
2-inch diameter, High Flow
SCH - 40 PVC
Screen Length 30 ft
Bottom of Screen 99 ft bgs

6-inch long Threaded End Cap
Bottom of Cap 99½ ft bgs

~~Collapsed Native Material~~ NONE

Total Depth of Borehole 102 ft bgs @ 0750 6-24-05

COMMENTS

- Drilled to 70' and stopped drilling for the day
- 06/24/05 @ 0730 resumed drilling to TD

HALEY & ALDRICH

Well Construction Record
Parcel C Remediation Well Installation Program
Former Boeing C-6 Site
Los Angeles, California

Well ID: AW0042UB
Start Date/Time: F 6/24/05 930
Finish Date/Time: F 6/24/05 12:15
Driller/Rig: RUBEN LARES CME-95
Geologist: T. HAMMOND
Amendment Well Stick-up Height (minimum 24-in) _____ inches AGS

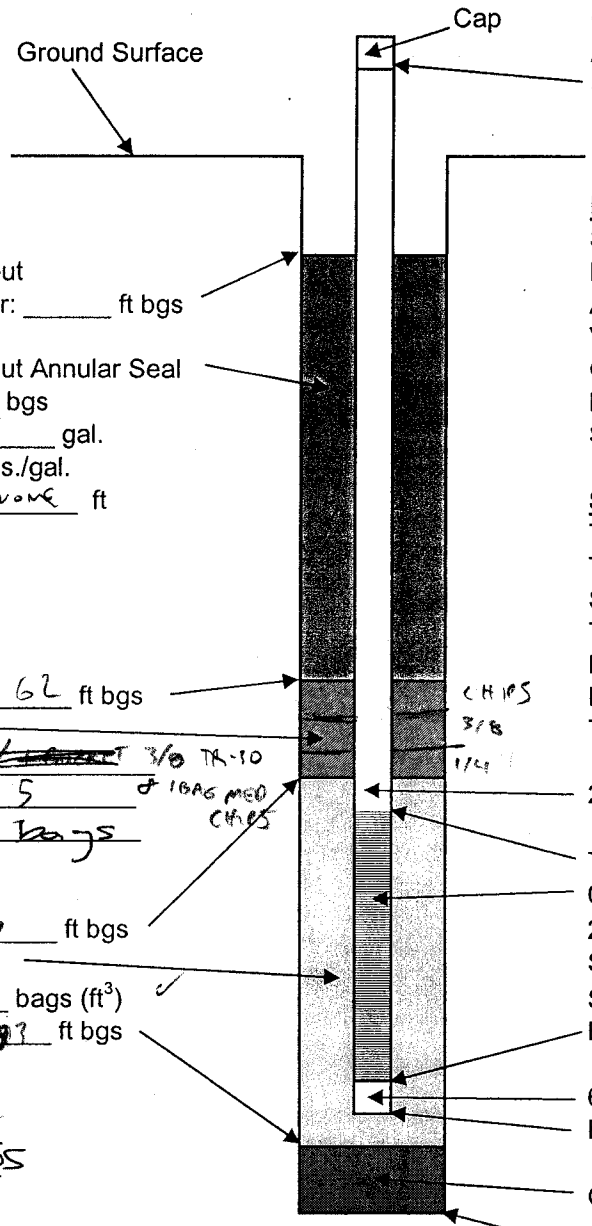

Cement/Bentonite Grout
Top of grout after 24 hr: _____ ft bgs

Cement/Bentonite Grout Annular Seal
Filled to 0 ft bgs
Volume Placed 225 gal.
Density 15 lbs./gal.
Tremie Pipe Length NONE ft

Top of bentonite seal 62 ft bgs
Bentonite Seal
Type 2 BUCKETS 1/4 ~~[illegible]~~ 3/8 TR-10 & 1BAG MED CHIPS
Thickness (5 ft min) 5
Volume Placed: 3 bags

Top of filter pack 67 ft bgs
No.3 Sand Filter Pack
Volume Placed 8 bags (ft^3)
Bottom of filter pack 93 ft bgs

QA/QC: CAL
Date: 6-27-05

ELEVATION DATA

Stake Elevation	50.48
Datum Differential	—
Adjusted Stake Elevation	~50.5
Vertical Offset to Stake	—
Ground Elevation at Well	~50.5
Planned Screen Elevation	~16 to -36
Screen Interval (Depth)	66.5 to 86.5

DTW ~65
ADJUST DOWN 70-90

SURGE/DEPTH RECORD

TD Inside Well Before Surging	95
Top of Sand Before Surging	67
Surge Time	15
Top of Sand After Surging	69
Distance Sand Dropped	2
DTW Inside Well After Surging	—
TD Inside Well After Surging	94 TOC

2-inch diameter SCH-40 Blank casing

Top of screen 70 ft bgs
0.020 - inch Machine Sotted Screen
2-inch diameter, High Flow
SCH - 40 PVC
Screen Length 20 ft
Bottom of Screen 90 ft bgs

6-inch long Threaded End Cap
Bottom of Cap 90.5 ft bgs

~~Collapsed Native Material~~ NONE

Total Depth of Borehole 93 ft bgs
10:15 AM

COMMENTS

Haley & Aldrich, Inc.
20040602_Well Construction Record Form VER 3.xls

1 December 2004

HALEY & ALDRICH

Well Construction Record
Parcel C Remediation Well Installation Program
Former Boeing C-6 Site
Los Angeles, California

Well ID: AW 0006 B
Start Date/Time: F 6/24/05 7:45
Finish Date/Time: F 6/24/05 12:45
Driller/Rig: JORGE GUTIERREZ CME-71
Geologist: T. Hammond
Amendment Well Stick-up Height (minimum 24-in) _____ inches AGS

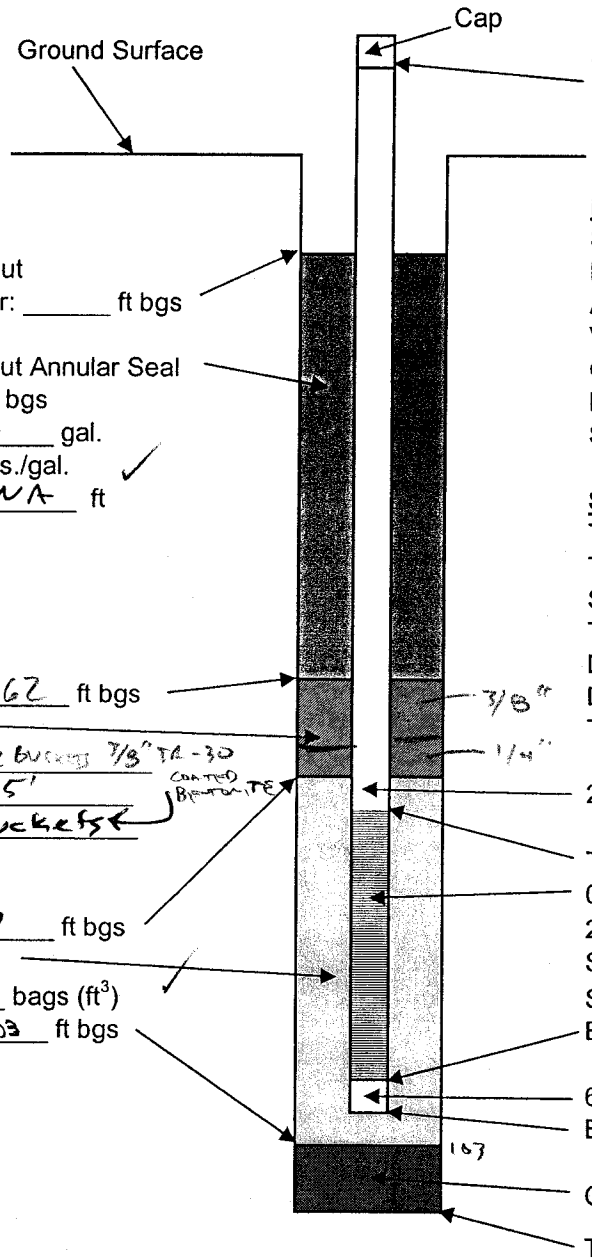

Cement/Bentonite Grout
Top of grout after 24 hr: _____ ft bgs

Cement/Bentonite Grout Annular Seal
Filled to 3 ft bgs
Volume Placed 200 gal.
Density 15 lbs./gal.
Tremie Pipe Length NA ft

Top of bentonite seal 62 ft bgs
Bentonite Seal
Type 1 BUCKET 1/4" / 2 BUCKETS 3/8" TR-30 COATED BENTONITE
Thickness (5 ft min) 5'
Volume Placed: 3 buckets

Top of filter pack 67 ft bgs
No.3 Sand Filter Pack
Volume Placed 11 bags (ft^3)
Bottom of filter pack 103 ft bgs

QA/QC: CMa
Date: 6.27-05

2-inch diameter SCH-40 Blank casing

Top of screen 70.5 ft bgs
0.020 - inch Machine Sotted Screen
2-inch diameter, High Flow
SCH - 40 PVC
Screen Length 30 ft
Bottom of Screen 100.5 ft bgs

6-inch long Threaded End Cap
Bottom of Cap 101 ft bgs

Collapsed Native Material 103 - 105

Total Depth of Borehole 105 ft bgs
9:05

8-inch diameter borehole

ELEVATION DATA

Stake Elevation	51.27
Datum Differential	—
Adjusted Stake Elevation	51.27
Vertical Offset to Stake	—
Ground Elevation at Well	~51.5
Planned Screen Elevation	-16 to -46
Screen Interval (Depth)	-67.5 to -97.5

DTW ~65'
ADJUST DOW - 70-100

SURGE/DEPTH RECORD

TD Inside Well Before Surging	103 (TOC)
Top of Sand Before Surging	67
Surge Time	15 min
Top of Sand After Surging	68
Distance Sand Dropped	1
DTW Inside Well After Surging	—
TD Inside Well After Surging	101 TOC

COMMENTS

HALEY & ALDRICH

Well Construction Record
Parcel C Remediation Well Installation Program
Former Boeing C-6 Site
Los Angeles, California

Well ID: AW0041C
Start Date/Time: 6-23-05 / 1630
Finish Date/Time: F 6/24/05 1450
Driller/Rig: WDC/CME 85/Ted Nichols
Geologist: G. Androsko

Amendment Well Stick-up Height (minimum 24-in) _____ inches AGS

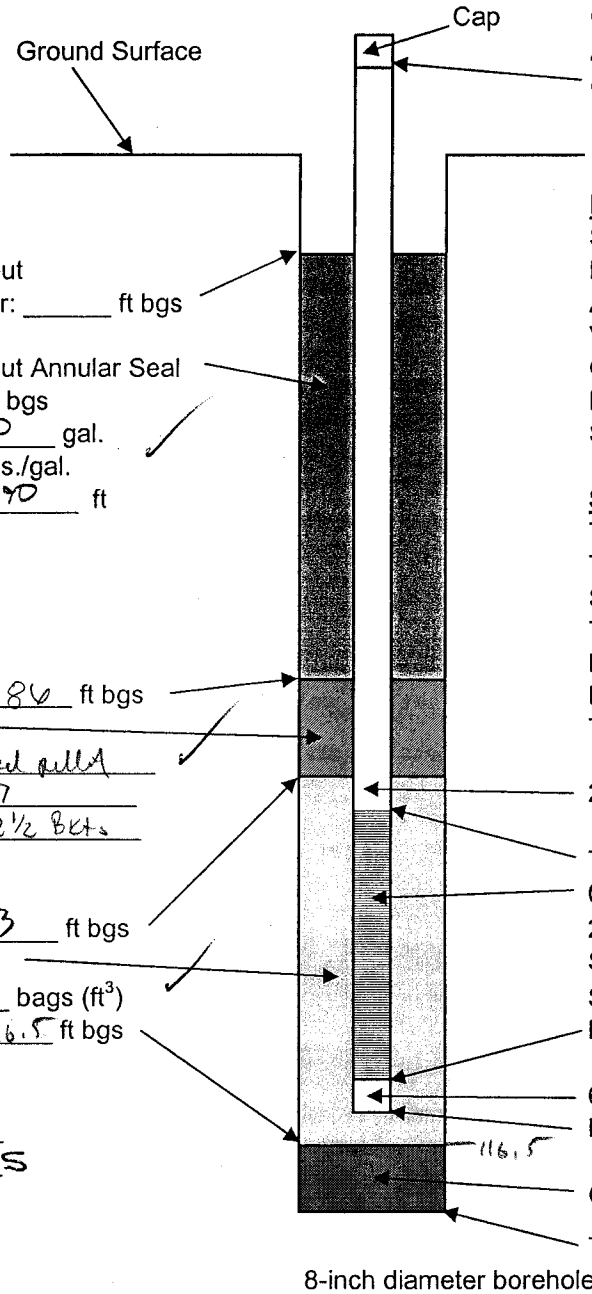

Cement/Bentonite Grout
Top of grout after 24 hr: _____ ft bgs

Cement/Bentonite Grout Annular Seal
Filled to 0 ft bgs
Volume Placed 350 gal.
Density 15 lbs./gal.
Tremie Pipe Length 70 ft

Top of bentonite seal 86 ft bgs
Bentonite Seal
Type 3/8" Coated pellet
Thickness (5 ft min) 7
Volume Placed: 2 1/2 Bkts

Top of filter pack 93 ft bgs
No.3 Sand Filter Pack
Volume Placed 7 1/2 bags (ft³)
Bottom of filter pack 116.5 ft bgs

QA/QC: CMC
Date: 6-27-05

ELEVATION DATA

Stake Elevation	51.59
Datum Differential	NA
Adjusted Stake Elevation	51.59
Vertical Offset to Stake	NA
Ground Elevation at Well	51.59
Planned Screen Elevation	-45 to -65
Screen Interval (Depth)	+96 to +116

SURGE/DEPTH RECORD

TD Inside Well Before Surging	119
Top of Sand Before Surging	92
Surge Time	15 min
Top of Sand After Surging	93
Distance Sand Dropped	1
DTW Inside Well After Surging	67.90
TD Inside Well After Surging	116

2-inch diameter SCH-40 Blank casing

Top of screen 95 1/2 ft bgs
0.020 - inch Machine Sotted Screen
2-inch diameter, High Flow
SCH - 80 PVC
Screen Length 20 ft
Bottom of Screen 115 1/2 ft bgs

6-inch long Threaded End Cap
Bottom of Cap 116. ft bgs

Collapsed Native Material 116.5 - 117.5

Total Depth of Borehole 117.5 ft bgs @ 0755 6-24-05

COMMENTS

- Drilled to 70' and stopped for the day
- 6-24-05 @0730 resumed drilling

6/24/05 910 SAND LOCKED UP ON WELL & PULLED CASING UP. PULLED WELL OUT & CLEANED OUT TO 120'

HALEY & ALDRICH

Well Construction Record
Parcel C Remediation Well Installation Program
Former Boeing C-6 Site
Los Angeles, California

Well ID: AW0020UR
Start Date/Time: 6-27-05 / 0750
Finish Date/Time: 6-27-05 / 1005
Driller/Rig: WDC/CME95/Reuben Lares
Geologist: G. Androsko
Amendment Well Stick-up Height (minimum 24-in) 60 inches AGS

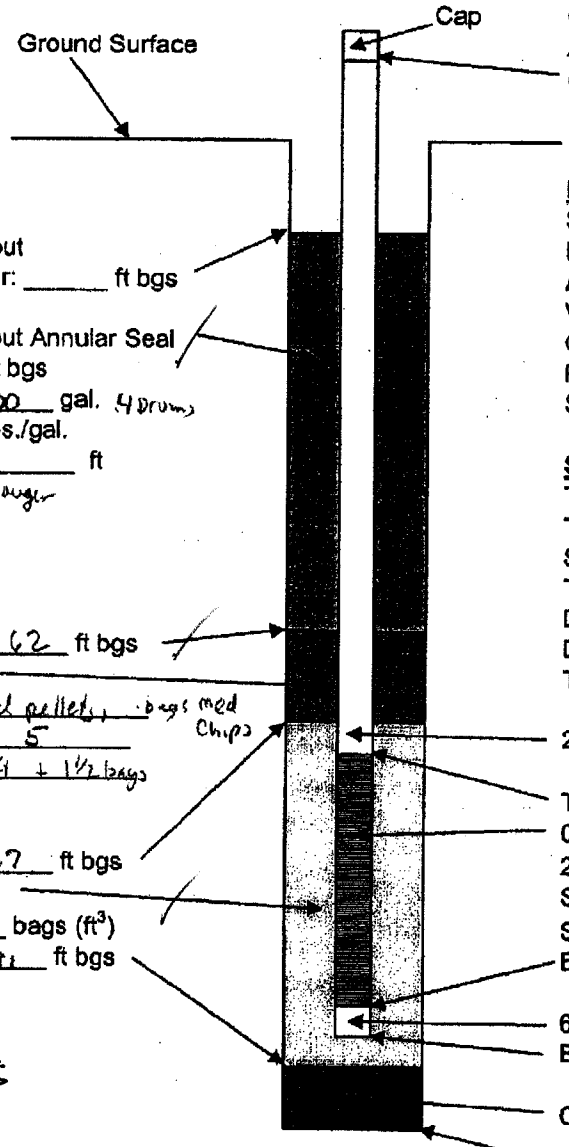

Cement/Bentonite Grout
Top of grout after 24 hr: _____ ft bgs

Cement/Bentonite Grout Annular Seal
Filled to 3 ft bgs
Volume Placed 200 gal. 4 drums
Density 15 lbs./gal.
Tremie Pipe Length _____ ft
Used center of auger

Top of bentonite seal 62 ft bgs
Bentonite Seal
Type Bkt 1/4" Coated pellets, bags med Chips
Thickness (5 ft min) 5
Volume Placed: 10 Bkt + 1 1/2 bags

Top of filter pack 67 ft bgs
No.3 Sand Filter Pack
Volume Placed 6 bags (ft³)
Bottom of filter pack 91 ft bgs

ELEVATION DATA

Stake Elevation	51.68
Datum Differential	NA
Adjusted Stake Elevation	51.68
Vertical Offset to Stake	NA
Ground Elevation at Well	51.68
Planned Screen Elevation	-16 to -36
Screen Interval (Depth)	67 1/2 to 87 1/2 Adjusted Down to 69 1/2 to 89 1/2

SURGE/DEPTH RECORD

TD Inside Well Before Surging	93 1/2 TOL
Top of Sand Before Surging	67
Surge Time	15
Top of Sand After Surging	95
Distance Sand Dropped	1.5
DTW Inside Well After Surging	69.96
TD Inside Well After Surging	95 TOL

2-inch diameter SCH-40 Blank casing

Top of screen 69 1/2 ft bgs
0.020 - inch Machine Sotted Screen
2-inch diameter, High Flow
SCH - 40 PVC
Screen Length 20 ft
Bottom of Screen 89 1/2 ft bgs

6-inch long Threaded End Cap
Bottom of Cap 90 ft bgs

Collapsed Native Material

Total Depth of Borehole 91 ft bgs 0825

QA/QC: CMC
Date: 6/28/05

COMMENTS

Haley & Aldrich, Inc.
20040602_Well Construction Record Form VER 3.xls

1 December 2004

HALEY & ALDRICH

Well Construction Record
Parcel C Remediation Well Installation Program
Former Boeing C-6 Site
Los Angeles, California

Well ID: AW~~00~~ 41 UB
Start Date/Time: 6-27-05 / 0810
Finish Date/Time: 6-27-05 / 1130
Driller/Rig: WDC/CME85 / Ted Nichols
Geologist: G. Andrasko
Amendment Well Stick-up Height (minimum 24-in) 28 inches AGS

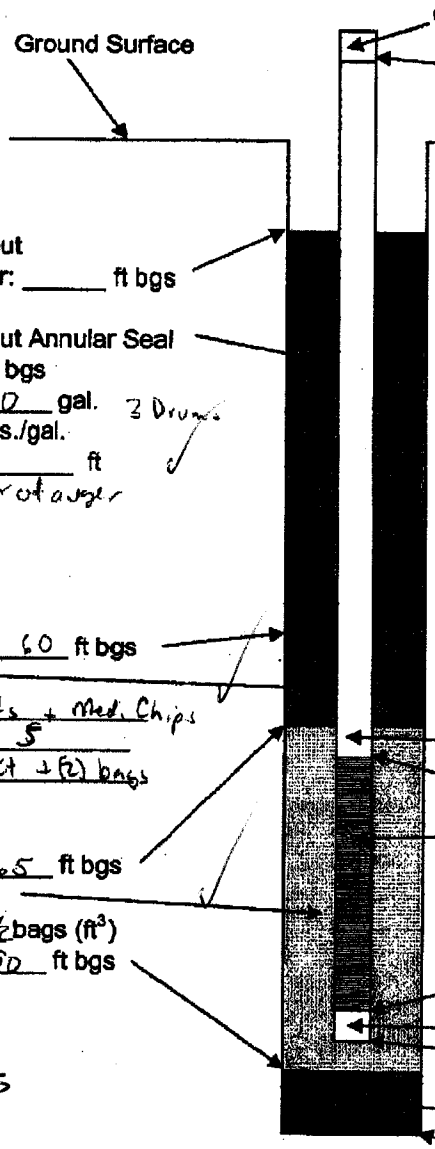

Cement/Bentonite Grout
Top of grout after 24 hr: _____ ft bgs

Cement/Bentonite Grout Annular Seal
Filled to 2 ft bgs
Volume Placed 150 gal. 3 Drums
Density 15 lbs./gal.
Tremie Pipe Length _____ ft
Used center of auger

Top of bentonite seal 60 ft bgs
Bentonite Seal
Type 1/4" Coated Pellets + Med. Chips
Thickness (5 ft min) 5
Volume Placed: (1) BKT + (2) bags

Top of filter pack 65 ft bgs
No.3 Sand Filter Pack
Volume Placed 6½ bags (ft^3)
Bottom of filter pack 90 ft bgs

QA/QC: CMA
Date: 6-28-05

ELEVATION DATA

Stake Elevation	~50.5
Datum Differential	NA
Adjusted Stake Elevation	~50.5
Vertical Offset to Stake	NA
Ground Elevation at Well	50.5
Planned Screen Elevation	-16 to -36
Screen Interval (Depth)	-66½ to -86½ Adjusted down to 68½ to 88½

SURGE/DEPTH RECORD

TD Inside Well Before Surging	87½
Top of Sand Before Surging	64
Surge Time	15 min
Top of Sand After Surging	66½
Distance Sand Dropped	2
DTW Inside Well After Surging	64.33
TD Inside Well After Surging	88½

2-inch diameter SCH-40 Blank casing

Top of screen 68 ft bgs
0.020 - inch Machine Sotted Screen
2-inch diameter, High Flow
SCH - 40 PVC
Screen Length 20 ft
Bottom of Screen 88 ft bgs

6-inch long Threaded End Cap
Bottom of Cap 88½ ft bgs

Collapsed Native Material

Total Depth of Borehole 90 ft bgs

COMMENTS

Haley & Aldrich, Inc.
20040602_Well Construction Record Form VER 3.xls

1 December 2004

HALEY & ALDRICH

Well Construction Record
Parcel C Remediation Well Installation Program
Former Boeing C-6 Site
Los Angeles, California

Well ID: AW0087B
Start Date/Time: M6/27/05 730
Finish Date/Time: M6/27/05 1230
Driller/Rig: PAUL ALMANZA CME-85
Geologist: T. HAMMOND

Amendment Well Stick-up Height (minimum 24-in) _____ inches AGS

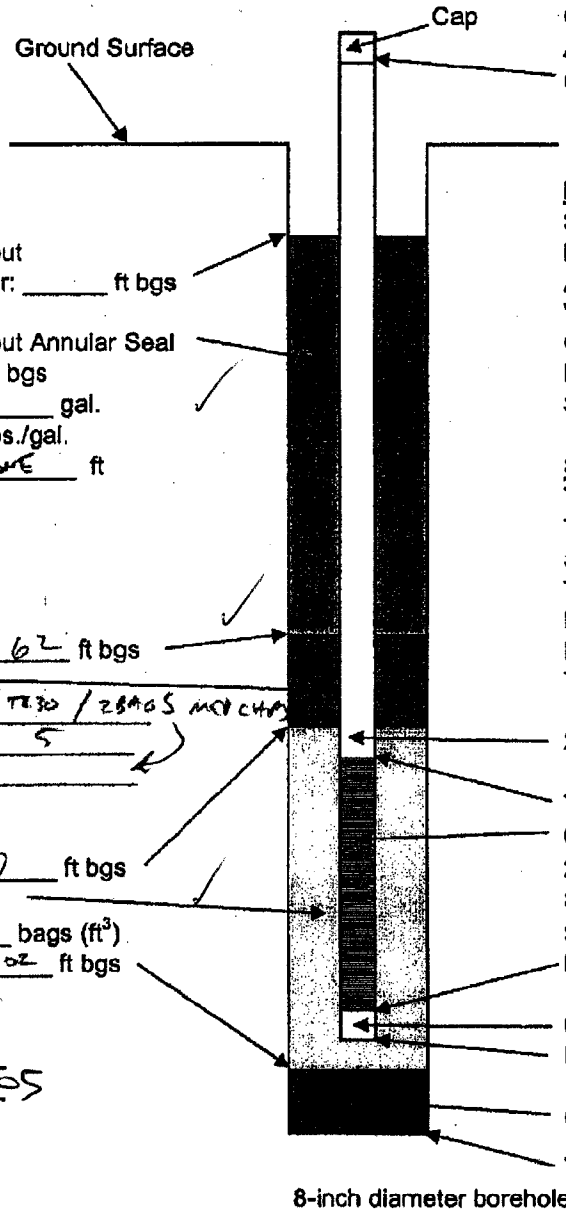

Cement/Bentonite Grout
Top of grout after 24 hr: _____ ft bgs

Cement/Bentonite Grout Annular Seal
Filled to 0 ft bgs
Volume Placed 225 gal.
Density 15 lbs./gal.
Tremie Pipe Length NONE ft

Top of bentonite seal 62 ft bgs
Bentonite Seal
Type 1 BUCKET 3/8" TR30 / 2 BAGS MED CHIPS
Thickness (5 ft min) 5
Volume Placed: _____

Top of filter pack 67 ft bgs
No.3 Sand Filter Pack
Volume Placed 11 bags (ft³)
Bottom of filter pack 102 ft bgs

ELEVATION DATA

Stake Elevation	51.48
Datum Differential	–
Adjusted Stake Elevation	51.48
Vertical Offset to Stake	–
Ground Elevation at Well	~51.5
Planned Screen Elevation	-16 to -46
Screen Interval (Depth)	67.5 - 97.5

DTW = ~95'
ADJUST DOWN 70-100

SURGE/DEPTH RECORD

TD Inside Well Before Surging	103 TOC
Top of Sand Before Surging	67
Surge Time	15 min
Top of Sand After Surging	70
Distance Sand Dropped	3
DTW Inside Well After Surging	~65
TD Inside Well After Surging	101

2-inch diameter SCH-40 Blank casing

Top of screen 70 ft bgs
0.020 - inch Machine Sotted Screen
2-inch diameter, High Flow
SCH - 40 PVC
Screen Length 30 ft
Bottom of Screen 100 ft bgs

6-inch long Threaded End Cap
Bottom of Cap 100.5 ft bgs

Collapsed Native Material 102 - 103

Total Depth of Borehole 103 ft bgs
9:15 AM

QA/QC: CMC
Date: 6-28-05

COMMENTS

Haley & Aldrich, Inc.
20040602_Well Construction Record Form VER 3.xls

1 December 2004

Finished today 12B, 20UB, 21C, 26C, 41UB, 87B

HALEY & ALDRICH

Well Construction Record
Parcel C Remediation Well Installation Program
Former Boeing C-6 Site
Los Angeles, California

Well ID: AW0012B
Start Date/Time: 6-27-05/1025
Finish Date/Time: 6-27-05/1410
Driller/Rig: WDC/CME95/Reuben Lares
Geologist: G. Androsko
Amendment Well Stick-up Height (minimum 24-in) 60 inches AGS

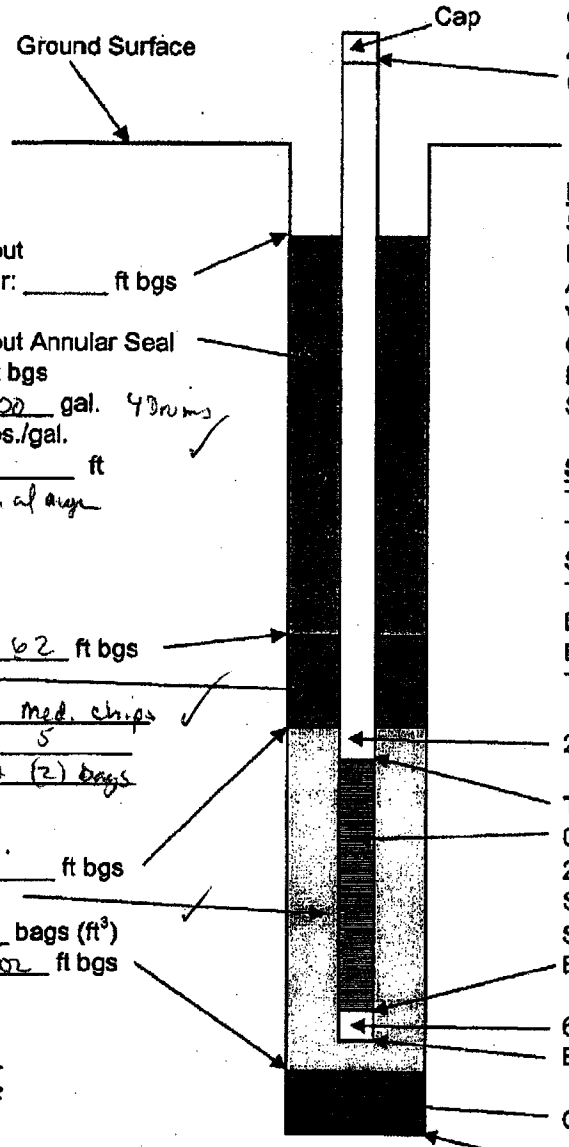

Cement/Bentonite Grout
Top of grout after 24 hr: _____ ft bgs

Cement/Bentonite Grout Annular Seal
Filled to 4 ft bgs
Volume Placed 200 gal. 4 Drums
Density 15 lbs./gal.
Tremie Pipe Length _____ ft
Used Center of auger

Top of bentonite seal 62 ft bgs
Bentonite Seal
Type 1/4" Pellets + med. chips
Thickness (5 ft min) 5
Volume Placed: 1 Box (2) bags

Top of filter pack 67 ft bgs
No.3 Sand Filter Pack
Volume Placed 8 bags (ft^3)
Bottom of filter pack 102 ft bgs

QA/QC: CWC
Date: 6-28-05

ELEVATION DATA

Stake Elevation	51.88
Datum Differential	NA
Adjusted Stake Elevation	51.88
Vertical Offset to Stake	NA
Ground Elevation at Well	51.88
Planned Screen Elevation	-16 to -46
Screen Interval (Depth)	68 to 98
	Adjusted down to 70 to 100

SURGE/DEPTH RECORD

TD Inside Well Before Surging	103 1/2
Top of Sand Before Surging	67
Surge Time	15
Top of Sand After Surging	103 1/2
Distance Sand Dropped	0
DTW Inside Well After Surging	68.60 TOC
TD Inside Well After Surging	103 1/2

2-inch diameter SCH-40 Blank casing

Top of screen 69 1/2 ft bgs
0.020 - inch Machine Sotted Screen
2-inch diameter, High Flow
SCH - 80 PVC
Screen Length 30 ft
Bottom of Screen 99 1/2 ft bgs

6-inch long Threaded End Cap
Bottom of Cap 100 ft bgs

Collapsed Native Material NONE

Total Depth of Borehole 102 ft bgs @ 1130

COMMENTS

HALEY & ALDRICH

Well Construction Record
Parcel C Remediation Well Installation Program
Former Boeing C-6 Site
Los Angeles, California

Well ID: AW0076C
Start Date/Time: M 6/27/05 12:40
Finish Date/Time: M 6/27/05 17:00
Driller/Rig: PAUL ALMANZA CME-85
Geologist: T. HAMMOND
Amendment Well Stick-up Height (minimum 24-in) _____ inches AGS

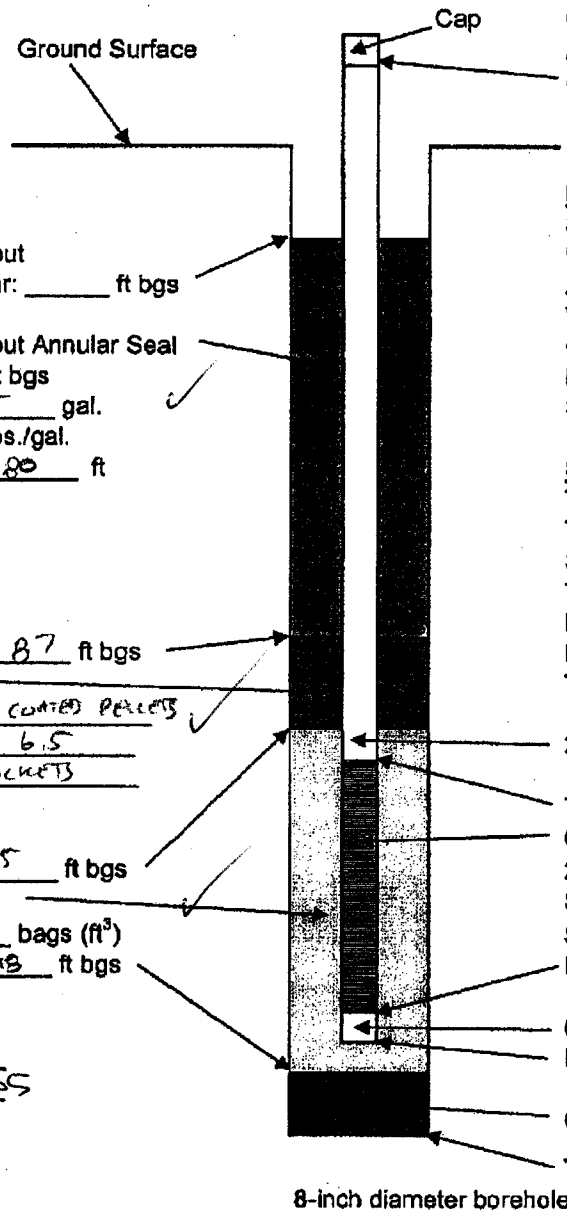

Cement/Bentonite Grout
Top of grout after 24 hr: _____ ft bgs

Cement/Bentonite Grout Annular Seal
Filled to 0 ft bgs
Volume Placed 325 gal.
Density 15 lbs./gal.
Tremie Pipe Length 80 ft

Top of bentonite seal 87 ft bgs
Bentonite Seal
Type 3/8" TR-30 COATED PELLETS
Thickness (5 ft min) 6.5
Volume Placed: 3 BUCKETS

Top of filter pack 93.5 ft bgs
No.3 Sand Filter Pack
Volume Placed 7 bags (ft^3)
Bottom of filter pack 118 ft bgs

QA/QC: CMA
Date: 6-28-05

ELEVATION DATA

Stake Elevation	51.49
Datum Differential	—
Adjusted Stake Elevation	51.49
Vertical Offset to Stake	—
Ground Elevation at Well	51.49 ~51.5
Planned Screen Elevation	-45 to -65
Screen Interval (Depth)	96.5 to 116.5

SURGE/DEPTH RECORD

TD Inside Well Before Surging	119 TOC
Top of Sand Before Surging	91
Surge Time	15 min
Top of Sand After Surging	92
Distance Sand Dropped	1
DTW Inside Well After Surging	—
TD Inside Well After Surging	118 TOC

2-inch diameter SCH-40 Blank casing

Top of screen 96.5 ft bgs
0.020 - inch Machine Sotted Screen
2-inch diameter, High Flow
SCH - 80 PVC
Screen Length 20 ft
Bottom of Screen 116.5 ft bgs

6-inch long Threaded End Cap
Bottom of Cap 117 ft bgs

~~Collapsed Native Material~~ NONE

Total Depth of Borehole 118 ft bgs
13.55

COMMENTS

HALEY & ALDRICH

Well Construction Record
Parcel C Remediation Well Installation Program
Former Boeing C-6 Site
Los Angeles, California

Well ID: AW0021C
Start Date/Time: 6-27-05/1230
Finish Date/Time: M 6/27/05 17:45
Driller/Rig: WDC/CME 85/Todd Nichols
Geologist: G. Androsko

Amendment Well Stick-up Height (minimum 24-in) _____ inches AGS

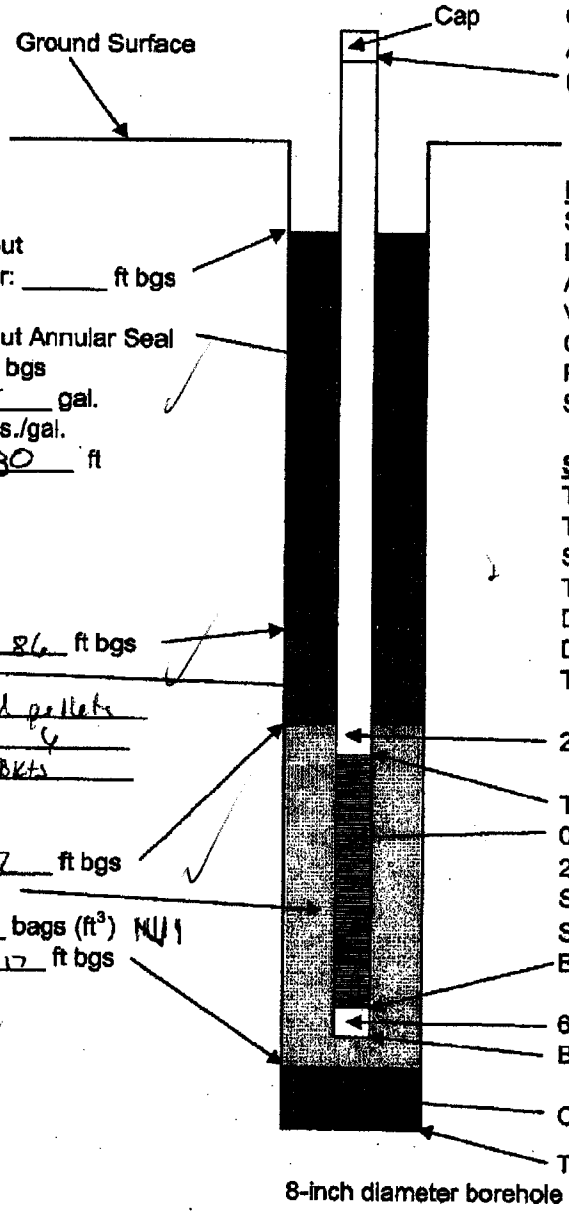

Cement/Bentonite Grout
Top of grout after 24 hr: _____ ft bgs

Cement/Bentonite Grout Annular Seal
Filled to 4 ft bgs
Volume Placed 325 gal.
Density 15 lbs./gal.
Tremie Pipe Length 80 ft

Top of bentonite seal 86 ft bgs
Bentonite Seal
Type 1/4" Coated pellets
Thickness (5 ft min) 4
Volume Placed: 3 Bkts

Top of filter pack 92 ft bgs
No.3 Sand Filter Pack
Volume Placed 6 bags (ft³) NA
Bottom of filter pack 117 ft bgs

QA/QC: CMC
Date: 6-28-05

ELEVATION DATA

Stake Elevation	Stake missing ~50
Datum Differential	—
Adjusted Stake Elevation	~50
Vertical Offset to Stake	—
Ground Elevation at Well	~50
Planned Screen Elevation	-45 to -65
Screen Interval (Depth)	-95 to -115

SURGE/DEPTH RECORD

TD Inside Well Before Surging	119
Top of Sand Before Surging	93
Surge Time	15 min
Top of Sand After Surging	93
Distance Sand Dropped	Ø
DTW Inside Well After Surging	68.28 TOC
TD Inside Well After Surging	119

2-inch diameter SCH-40 Blank casing

Top of screen 94 1/2 ft bgs
0.020 - inch Machine Sotted Screen
2-inch diameter, High Flow
SCH - 80 PVC
Screen Length 20 ft
Bottom of Screen 114 1/2 ft bgs

6-inch long Threaded End Cap
Bottom of Cap 115 ft bgs

Collapsed Native Material

Total Depth of Borehole 117 ft bgs

COMMENTS

HALEY & ALDRICH

Well Construction Record
Parcel C Remediation Well Installation Program
Former Boeing C-6 Site
Los Angeles, California

Well ID: AW0007B
Start Date/Time: 6-27-05 / 1240
Finish Date/Time: 6-28-05 / 0900
Driller/Rig: WDC/CME 95 / Ruben Lopez
Geologist: G. Andrews
Amendment Well Stick-up Height (minimum 24-in) _____ inches AGS

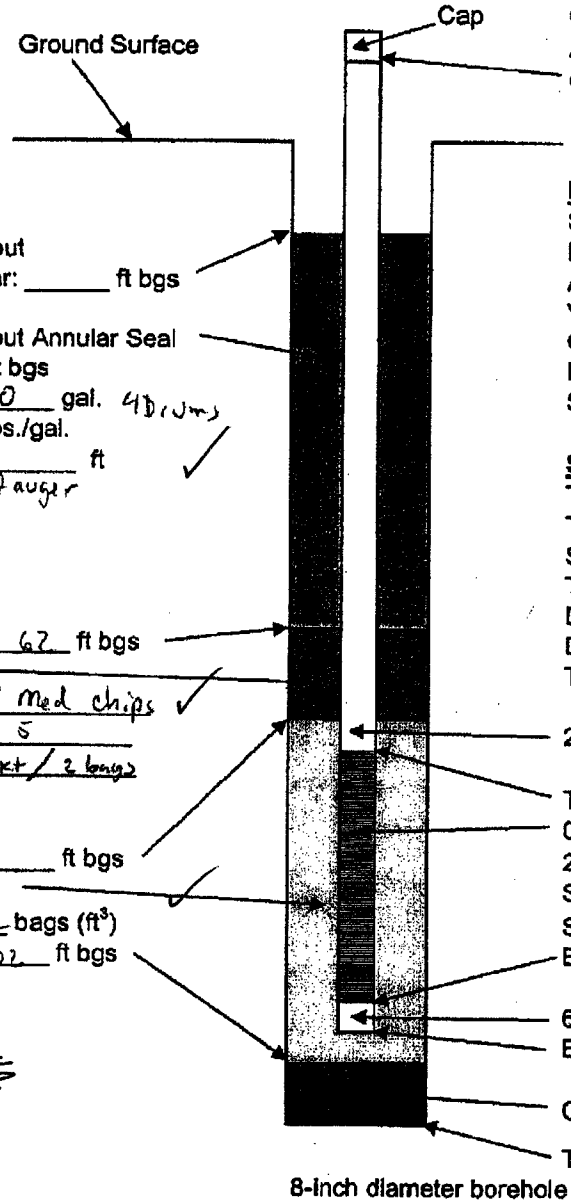

Cement/Bentonite Grout
Top of grout after 24 hr: _____ ft bgs

Cement/Bentonite Grout Annular Seal
Filled to 7 ft bgs
Volume Placed 200 gal. 4 Drums
Density 15 lbs./gal.
Tremie Pipe Length _____ ft
Used center of auger

Top of bentonite seal 62 ft bgs
Bentonite Seal
Type 1/4 Pellets / Med chips
Thickness (5 ft min) 5
Volume Placed: 1 bkt / 2 bags

Top of filter pack 67 ft bgs
No.3 Sand Filter Pack
Volume Placed 8 1/2 bags (ft³)
Bottom of filter pack 102 ft bgs

QA/QC: CMO
Date: 6-29-05

ELEVATION DATA

Stake Elevation	51.17
Datum Differential	NA
Adjusted Stake Elevation	51.17
Vertical Offset to Stake	NA
Ground Elevation at Well	51.17
Planned Screen Elevation	-16 to -46
Screen Interval (Depth)	-67 to -97
	Adjusted down to -68 to -98

SURGE/DEPTH RECORD

TD Inside Well Before Surging	100 TOC
Top of Sand Before Surging	66
Surge Time	15 min
Top of Sand After Surging	67
Distance Sand Dropped	1
DTW Inside Well After Surging	67.67
TD Inside Well After Surging	100

2-inch diameter SCH-40 Blank casing

Top of screen 69 1/2 ft bgs
0.020 - inch Machine Sotted Screen
2-inch diameter, High Flow
SCH - 40 PVC
Screen Length 30 ft
Bottom of Screen 99 1/2 ft bgs

6-inch long Threaded End Cap
Bottom of Cap 102 ft bgs

Collapsed Native Material

Total Depth of Borehole 102 ft bgs @ 1530

COMMENTS

Set bentonite seal and will grout tomorrow

HALEY & ALDRICH

Well Construction Record
Parcel C Remediation Well Installation Program
Former Boeing C-6 Site
Los Angeles, California

Well ID: AW 0008B
Start Date/Time: 6-28-05/0930
Finish Date/Time: 6-28-05/1230
Driller/Rig: WDC/CME95/Rerber-Lares
Geologist: G. Androsko
Amendment Well Stick-up Height (minimum 24-in) 54 inches AGS

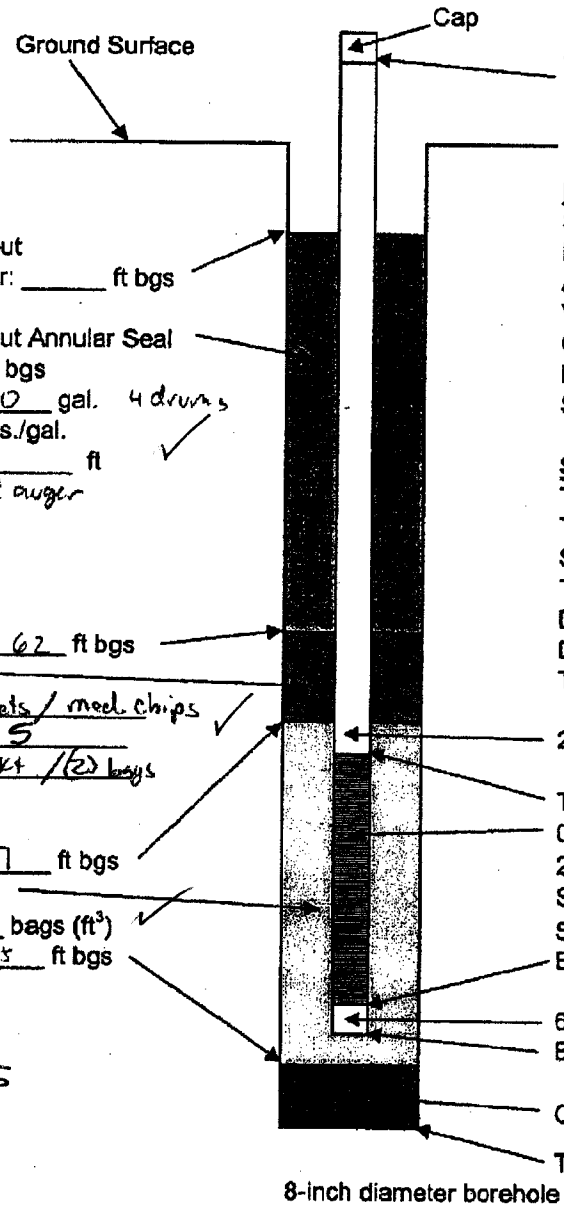

Cement/Bentonite Grout
Top of grout after 24 hr: _____ ft bgs

Cement/Bentonite Grout Annular Seal
Filled to 5 ft bgs
Volume Placed 250 gal. 4 drums
Density 15 lbs./gal.
Tremie Pipe Length _____ ft
Used center of auger

Top of bentonite seal 62 ft bgs
Bentonite Seal
Type 1/4" Coated pellets / med. chips
Thickness (5 ft min) 5
Volume Placed: (1) BKT / (2) bags

Top of filter pack 67 ft bgs
No.3 Sand Filter Pack
Volume Placed 9 1/2 bags (ft³)
Bottom of filter pack 105 ft bgs

QA/QC: CW
Date: 6-29-05

ELEVATION DATA

Stake Elevation	51.74
Datum Differential	NA
Adjusted Stake Elevation	51.74
Vertical Offset to Stake	NA
Ground Elevation at Well	51.74
Planned Screen Elevation	-16 to -46
Screen Interval (Depth)	-68 to -98

Adjusted down to -70 to -100

SURGE/DEPTH RECORD

TD Inside Well Before Surging	101 TOC
Top of Sand Before Surging	67
Surge Time	15
Top of Sand After Surging	69
Distance Sand Dropped	2
DTW Inside Well After Surging	68.34 TOC
TD Inside Well After Surging	103 TOC

2-inch diameter SCH-40 Blank casing

Top of screen 70 ft bgs
0.020 - inch Machine Sotted Screen
2-inch diameter, High Flow
SCH - ~~20~~ 40 PVC
Screen Length 30 ft
Bottom of Screen 100 ft bgs

6-inch long Threaded End Cap
Bottom of Cap 101 1/2 ft bgs

Collapsed Native Material

Total Depth of Borehole 105 ft bgs @ 1010

COMMENTS

Haley & Aldrich, Inc.
20040602_Well Construction Record Form VER 3.xls

1 December 2004

HALEY & ALDRICH

Well Construction Record
Parcel C Remediation Well Installation Program
Former Boeing C-6 Site
Los Angeles, California

Well ID: AW0034C
Start Date/Time: TU 6/28/05 730
Finish Date/Time: TU 6/28/05 1430
Driller/Rig: PAUL ALMANZA CME-8
Geologist: T. HAMMOND
Amendment Well Stick-up Height (minimum 24-in) 3.5 inches AGS

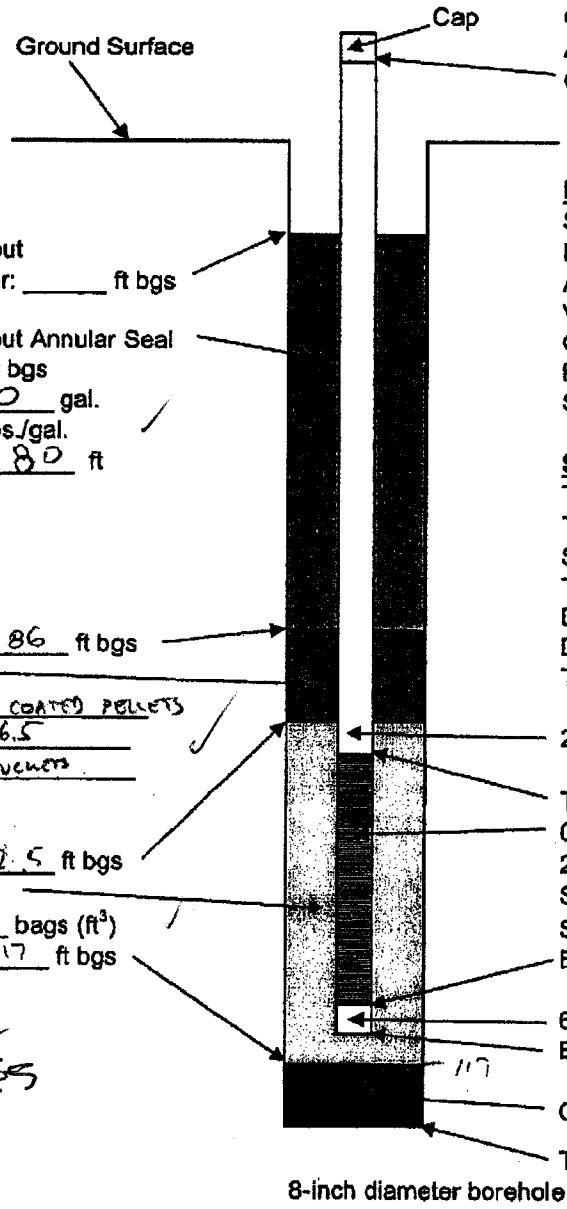

Cement/Bentonite Grout
Top of grout after 24 hr: _____ ft bgs

Cement/Bentonite Grout Annular Seal
Filled to 1 ft bgs
Volume Placed 350 gal.
Density 15 lbs./gal.
Tremie Pipe Length 80 ft

Top of bentonite seal 86 ft bgs
Bentonite Seal
Type 3/8" TR-30 COATED PELLETS
Thickness (5 ft min) 6.5
Volume Placed: 3 Buckets

Top of filter pack 92.5 ft bgs
No.3 Sand Filter Pack
Volume Placed 8 bags (ft^3)
Bottom of filter pack 117 ft bgs

QA/QC: CMC
Date: 6-29-05

ELEVATION DATA

Stake Elevation	51.44
Datum Differential	—
Adjusted Stake Elevation	~51.5
Vertical Offset to Stake	—
Ground Elevation at Well	~51.5
Planned Screen Elevation	-45 TO -65
Screen Interval (Depth)	96.5 to 116.5

SURGE/DEPTH RECORD

TD Inside Well Before Surging	119 TOC
Top of Sand Before Surging	93
Surge Time	15 min
Top of Sand After Surging	95
Distance Sand Dropped	2
DTW Inside Well After Surging	—
TD Inside Well After Surging	119 TOC

2-inch diameter SCH-40 Blank casing

Top of screen 96.5 ft bgs
0.020 - inch Machine Sotted Screen
2-inch diameter, High Flow
SCH - 80 PVC
Screen Length 20 ft
Bottom of Screen 116.5 ft bgs

6-inch long Threaded End Cap
Bottom of Cap 117 ft bgs

Collapsed Native Material

Total Depth of Borehole 118 ft bgs

COMMENTS

HALEY & ALDRICH

Well Construction Record
Parcel C Remediation Well Installation Program
Former Boeing C-6 Site
Los Angeles, California

Well ID: AW0025C
Start Date/Time: 7-28-05/0835
Finish Date/Time: 7-28-05/1440
Driller/Rig: WDC/CME85/Ted Nicod
Geologist: G Andrasko
Amendment Well Stick-up Height (minimum 24-in) 46 inches AGS

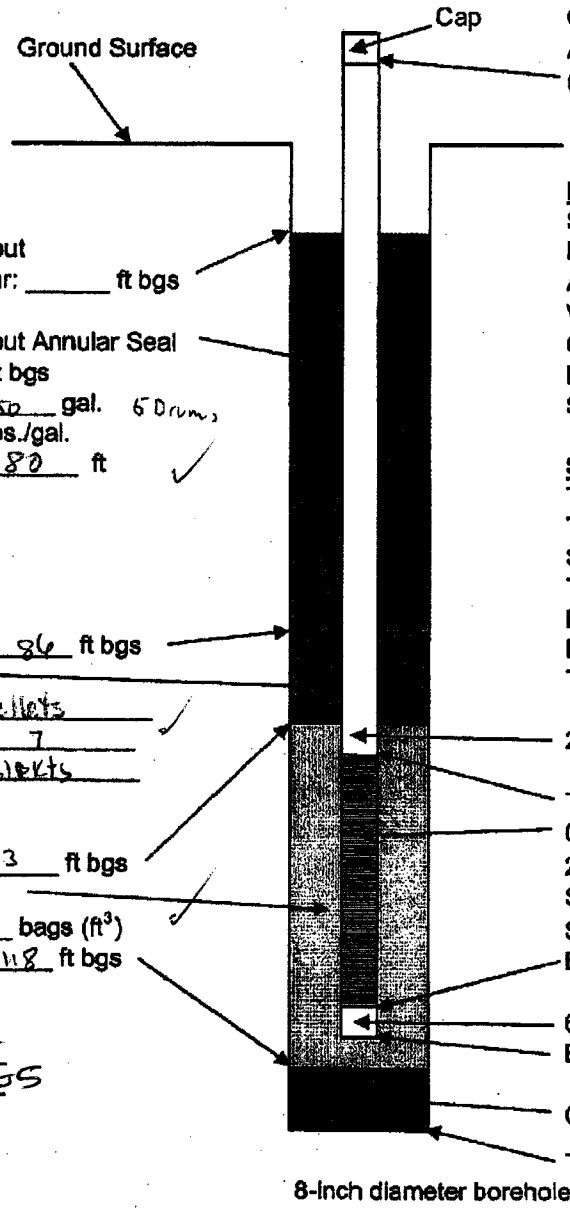

Cement/Bentonite Grout
Top of grout after 24 hr: _____ ft bgs

Cement/Bentonite Grout Annular Seal
Filled to 1 ft bgs
Volume Placed 250 gal. 5 Drums
Density 15 lbs./gal.
Tremie Pipe Length 80 ft

Top of bentonite seal 86 ft bgs
Bentonite Seal
Type 1/4" Coated pellets
Thickness (5 ft min) 7
Volume Placed: 3 buckets

Top of filter pack 93 ft bgs
No.3 Sand Filter Pack
Volume Placed 5 bags (ft^3)
Bottom of filter pack 118 ft bgs

QA/QC: CMC
Date: 6-29-05

ELEVATION DATA

Stake Elevation	51.59
Datum Differential	NA
Adjusted Stake Elevation	51.59
Vertical Offset to Stake	NA
Ground Elevation at Well	51.59
Planned Screen Elevation	-45 to -65
Screen Interval (Depth)	96 1/2 to 116 1/2

SURGE/DEPTH RECORD

TD Inside Well Before Surging	116 1/2
Top of Sand Before Surging	94
Surge Time	15 min
Top of Sand After Surging	94
Distance Sand Dropped	0
DTW Inside Well After Surging	62.49
TD Inside Well After Surging	116 1/2

2-inch diameter SCH-40 Blank casing

Top of screen 96 ft bgs
0.020 - inch Machine Sotted Screen
2-inch diameter, High Flow
SCH - 80 PVC
Screen Length 20 ft
Bottom of Screen 116 ft bgs

6-inch long Threaded End Cap
Bottom of Cap 116 1/2 ft bgs

Collapsed Native Material

Total Depth of Borehole 118 ft bgs @ 1020

COMMENTS

Haley & Aldrich, Inc.
20040602_Well Construction Record Form VER 3.xls

1 December 2004

HALEY & ALDRICH

Well Construction Record
Parcel C Remediation Well Installation Program
Former Boeing C-6 Site
Los Angeles, California

Well ID: AV0018C
Start Date/Time: 6-28-05 / 1310
Finish Date/Time: 6-28-05 / 1630
Driller/Rig: WDC/CME 95 / Rodeen Lanes
Geologist: G. Androsko
Amendment Well Stick-up Height (minimum 24-in) 30 inches AGS

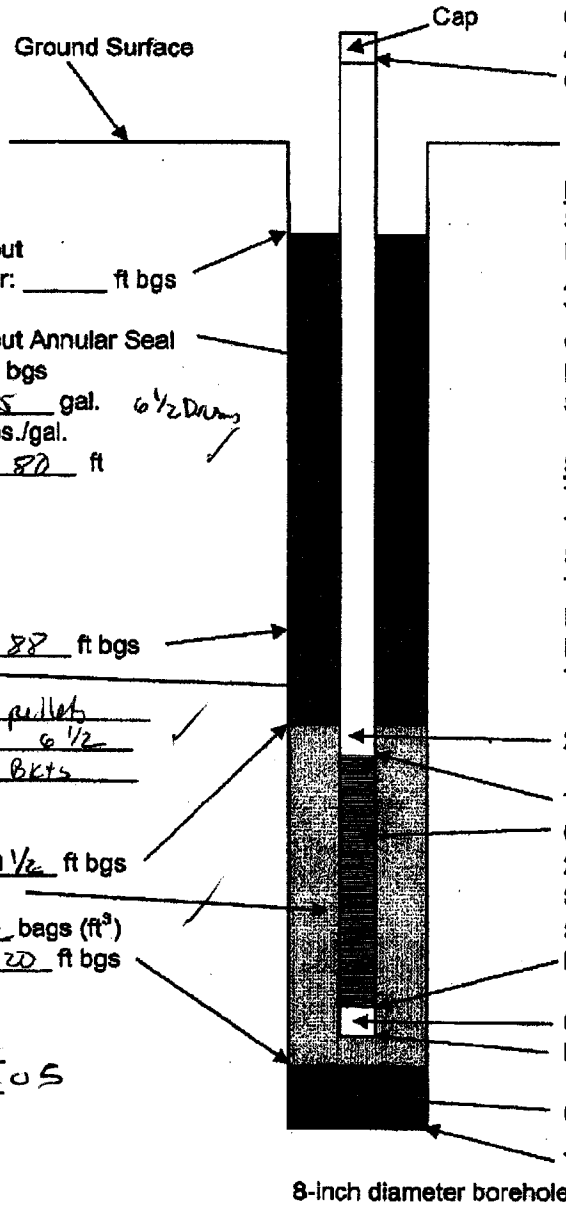

Cement/Bentonite Grout
Top of grout after 24 hr: _____ ft bgs

Cement/Bentonite Grout Annular Seal
Filled to 1 ft bgs
Volume Placed 325 gal. 6 1/2 Drums
Density 15 lbs./gal.
Tremie Pipe Length 80 ft

Top of bentonite seal 88 ft bgs
Bentonite Seal
Type 1/4" Coated pellets
Thickness (5 ft min) 6 1/2
Volume Placed: (3) Bkts

Top of filter pack 94 1/2 ft bgs
No.3 Sand Filter Pack
Volume Placed 9 1/2 bags (ft³)
Bottom of filter pack 120 ft bgs

QA/QC: CMC
Date: 6-21-05

ELEVATION DATA

Stake Elevation	52.53
Datum Differential	NA
Adjusted Stake Elevation	52.63
Vertical Offset to Stake	NA
Ground Elevation at Well	52.63
Planned Screen Elevation	-45 to -65
Screen Interval (Depth)	-97 1/2 to 117 1/2

SURGE/DEPTH RECORD

TD Inside Well Before Surging	119.4 (TOC)
Top of Sand Before Surging	94
Surge Time	15 min
Top of Sand After Surging	95
Distance Sand Dropped	1
DTW Inside Well After Surging	67.17
TD Inside Well After Surging	120.3

2-inch diameter SCH-40 Blank casing

Top of screen 97 1/2 ft bgs
0.020 - inch Machine Sotted Screen
2-inch diameter, High Flow
SCH - 80 PVC
Screen Length 20 ft
Bottom of Screen 117 1/2 ft bgs

6-inch long Threaded End Cap
Bottom of Cap 118 ft bgs

Collapsed Native Material

Total Depth of Borehole 120 ft bgs

COMMENTS

Haley & Aldrich, Inc.
20040602_Well Construction Record Form VER 3.xls

1 December 2004

HALEY & ALDRICH

Well Construction Record
Parcel C Remediation Well Installation Program
Former Boeing C-6 Site
Los Angeles, California

Well ID: AW0014C
Start Date/Time: 6-29-05/0855
Finish Date/Time: 6-29-05/1450
Driller/Rig: WDC/CME85/Ted Nichols
Geologist: G. Andrusko
Amendment Well Stick-up Height (minimum 24-in) 24" inches AGS

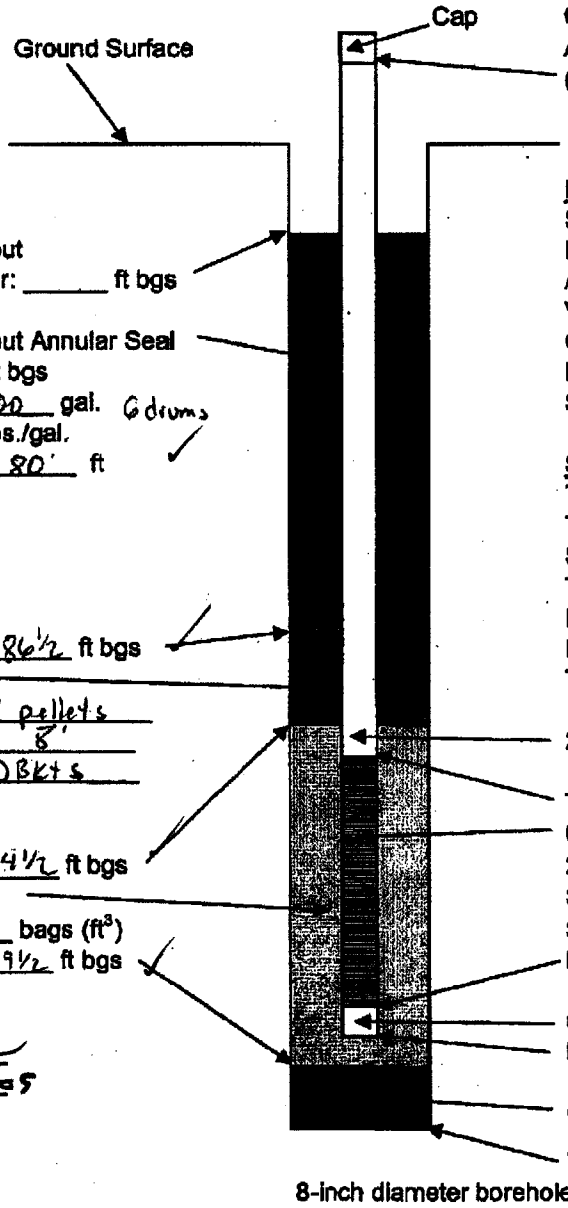

ELEVATION DATA

Stake Elevation	53.23
Datum Differential	NA
Adjusted Stake Elevation	53.23
Vertical Offset to Stake	NA
Ground Elevation at Well	53.23
Planned Screen Elevation	-45 to -65
Screen Interval (Depth)	-98 to 118

SURGE/DEPTH RECORD

TD Inside Well Before Surging	118
Top of Sand Before Surging	95
Surge Time	15 min
Top of Sand After Surging	94½
Distance Sand Dropped	½
DTW Inside Well After Surging	66.52
TD Inside Well After Surging	118

Cement/Bentonite Grout
Top of grout after 24 hr: _____ ft bgs

Cement/Bentonite Grout Annular Seal
Filled to 5 ft bgs
Volume Placed 300 gal. 6 drums
Density 15 lbs./gal.
Tremie Pipe Length 80' ft

Top of bentonite seal 86½ ft bgs
Bentonite Seal
Type ¼" Coated pellets
Thickness (5 ft min) 8'
Volume Placed: (3) Bkts

Top of filter pack 94½ ft bgs
No.3 Sand Filter Pack
Volume Placed 6 bags (ft³)
Bottom of filter pack 119½ ft bgs

2-inch diameter SCH-40 Blank casing

Top of screen 98 ft bgs
0.020 - inch Machine Sotted Screen
2-inch diameter, High Flow
SCH - 80 PVC
Screen Length 20 ft
Bottom of Screen 118 ft bgs

6-inch long Threaded End Cap
Bottom of Cap 118½ ft bgs

Collapsed Native Material

Total Depth of Borehole 119½ ft bgs @ 1030

QA/QC: CMC
Date: 6/30/05

COMMENTS

Hand augered to 6'

HALEY & ALDRICH

Well Construction Record
Parcel C Remediation Well Installation Program
Former Boeing C-6 Site
Los Angeles, California

Well ID: AW0016B
Start Date/Time: w 9/29/05 9:15
Finish Date/Time: w 9/29/05 13:30
Driller/Rig: PAUL ALMANZA CME-8
Geologist: T. HAMMOND
Amendment Well Stick-up Height (minimum 24-in) 4 inches AGS

HAND AUGER 5'

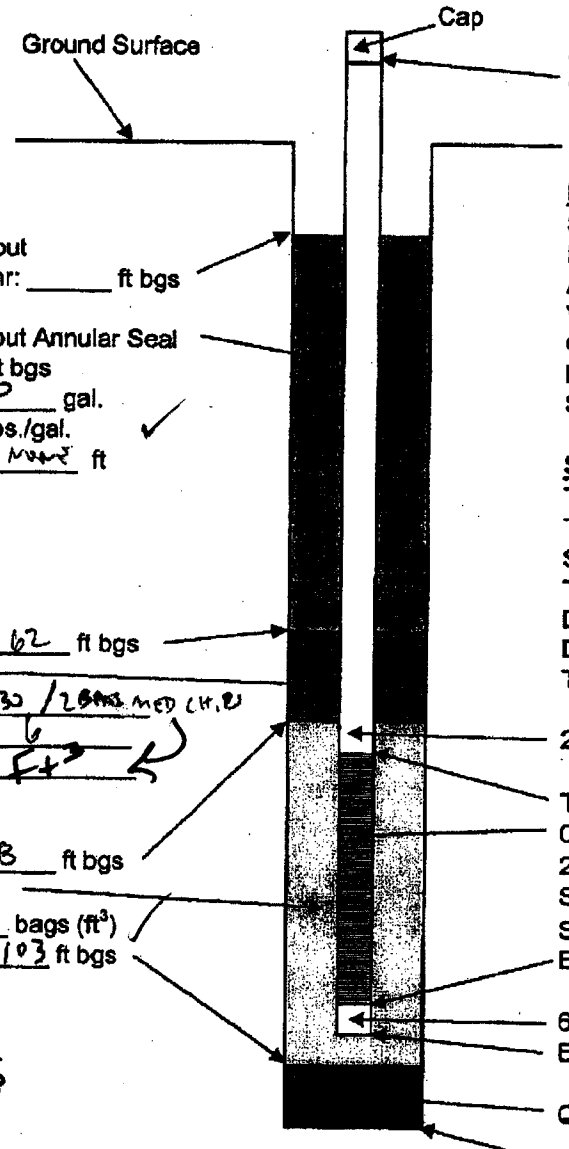

Cement/Bentonite Grout
Top of grout after 24 hr: _____ ft bgs

Cement/Bentonite Grout Annular Seal
Filled to 0 ft bgs
Volume Placed 250 gal.
Density 15 lbs./gal.
Tremie Pipe Length NONE ft

Top of bentonite seal 62 ft bgs
Bentonite Seal
Type 1 BUCKET 3/8 TR-30 / 2 BAGS MED CH.R
Thickness (5 ft min) 6
Volume Placed: 3 Ft³

Top of filter pack 68 ft bgs
No.3 Sand Filter Pack
Volume Placed 10 bags (ft³)
Bottom of filter pack 103 ft bgs

QA/QC: CMC
Date: 6/30/05

8-inch diameter borehole

ELEVATION DATA

Stake Elevation	57.7
Datum Differential	—
Adjusted Stake Elevation	~52
Vertical Offset to Stake	—
Ground Elevation at Well	~52
Planned Screen Elevation	-16 TO -46
Screen Interval (Depth)	68 TO 98

DTW = ~66
ADJUST DOWN 71.

SURGE/DEPTH RECORD

TD Inside Well Before Surging	102 TOC
Top of Sand Before Surging	68
Surge Time	15 MIN
Top of Sand After Surging	71
Distance Sand Dropped	3
DTW Inside Well After Surging	—
TD Inside Well After Surging	101 TOC

2-inch diameter SCH-40 Blank casing

Top of screen 71 ft bgs
0.020 - inch Machine Sotted Screen
2-inch diameter, High Flow
SCH - 40 PVC
Screen Length 30 ft
Bottom of Screen 101 ft bgs

6-inch long Threaded End Cap
Bottom of Cap 101.5 ft bgs

~~Collapsed Native Material~~ NONE

Total Depth of Borehole 103 ft bgs

COMMENTS

HAND AUGER REFUSAL AT STAKED LOCATION, MOVED ~3' EAST

HALEY & ALDRICH

Well Construction Record
Parcel C Remediation Well Installation Program
Former Boeing C-6 Site
Los Angeles, California

Well ID: AW0025B
Start Date/Time: W 6/29/05 11:20
Finish Date/Time: W 6/29/05 16:45
Driller/Rig: RUBEN LARES CME-75
Geologist: T. HAMMOND
Amendment Well Stick-up Height (minimum 24-in) 41 inches AGS

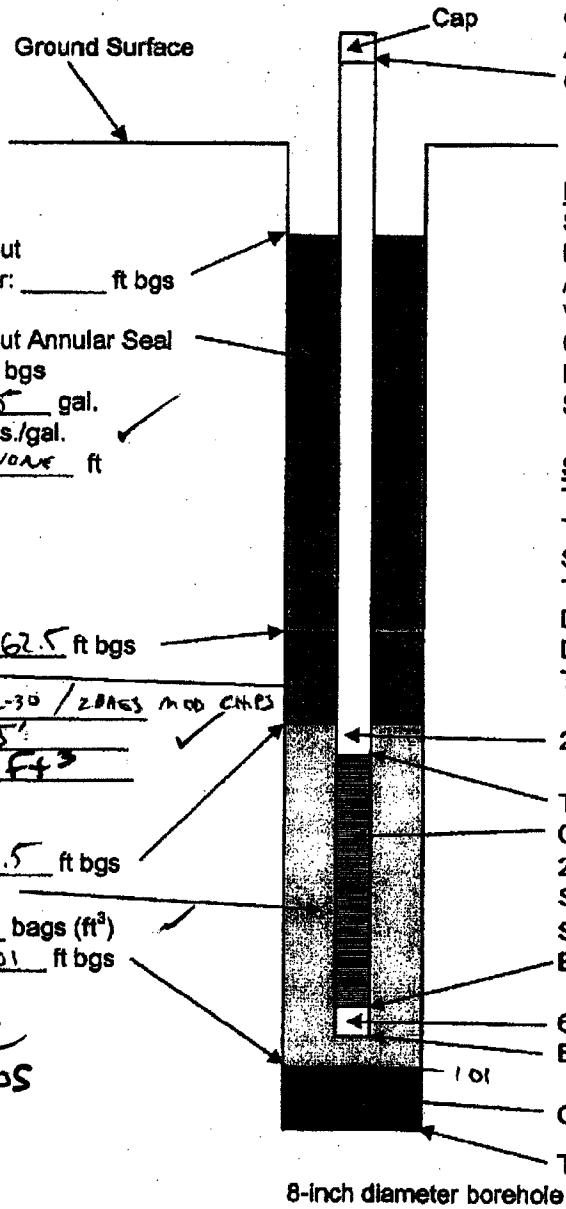

Cement/Bentonite Grout
Top of grout after 24 hr: _____ ft bgs

Cement/Bentonite Grout Annular Seal
Filled to 3 ft bgs
Volume Placed 225 gal.
Density 15 lbs./gal.
Tremie Pipe Length NONE ft

Top of bentonite seal 62.5 ft bgs
Bentonite Seal
Type 1 BUCKET 3/8" TR-30 / 2 BAGS MOD CHIPS
Thickness (5 ft min) 5'
Volume Placed: 3 ft³

Top of filter pack 67.5 ft bgs
No.3 Sand Filter Pack
Volume Placed 9 bags (ft³)
Bottom of filter pack 101 ft bgs

QA/QC: CMC
Date: 6/30/05

ELEVATION DATA

Stake Elevation	51.77
Datum Differential	—
Adjusted Stake Elevation	~52
Vertical Offset to Stake	—
Ground Elevation at Well	~52
Planned Screen Elevation	-16 TO -46
Screen Interval (Depth)	68 TO 98

DTW ~66' 101
ADJUST DOWN 71 -[redacted]

SURGE/DEPTH RECORD

TD Inside Well Before Surging	103 TOC
Top of Sand Before Surging	67.5
Surge Time	15 MIN
Top of Sand After Surging	CB
Distance Sand Dropped	0.5
DTW Inside Well After Surging	—
TD Inside Well After Surging	104 TOC

2-inch diameter SCH-40 Blank casing

Top of screen 70.5 ft bgs
0.020 - inch Machine Slotted Screen
2-inch diameter, High Flow
SCH - 40 PVC
Screen Length 30 ft
Bottom of Screen 100.5 ft bgs

6-inch long Threaded End Cap
Bottom of Cap 101 ft bgs

Collapsed Native Material 101-105

Total Depth of Borehole 105 ft bgs

COMMENTS

CHIPS BRIDGED ON 1ST ATTEMPT TO SET WELL. PULLED CASING BUT SCREEN DID NOT COME OUT. PULLED AUGERS, REPLACE WOOD PLUG & RE-DRILL TO 5' BELOW PREVIOUS DRILL DEPTH ~108'

HALEY & ALDRICH

Well Construction Record
Parcel C Remediation Well Installation Program
Former Boeing C-6 Site
Los Angeles, California

Well ID: AW00268
Start Date/Time: 6-28-05 / 1540
Finish Date/Time: 6-29-05 / 0830
Driller/Rig: WDC / CME85 / Ted Nichols
Geologist: G. Andrasico

Amendment Well Stick-up Height (minimum 24-in) 66 inches AGS

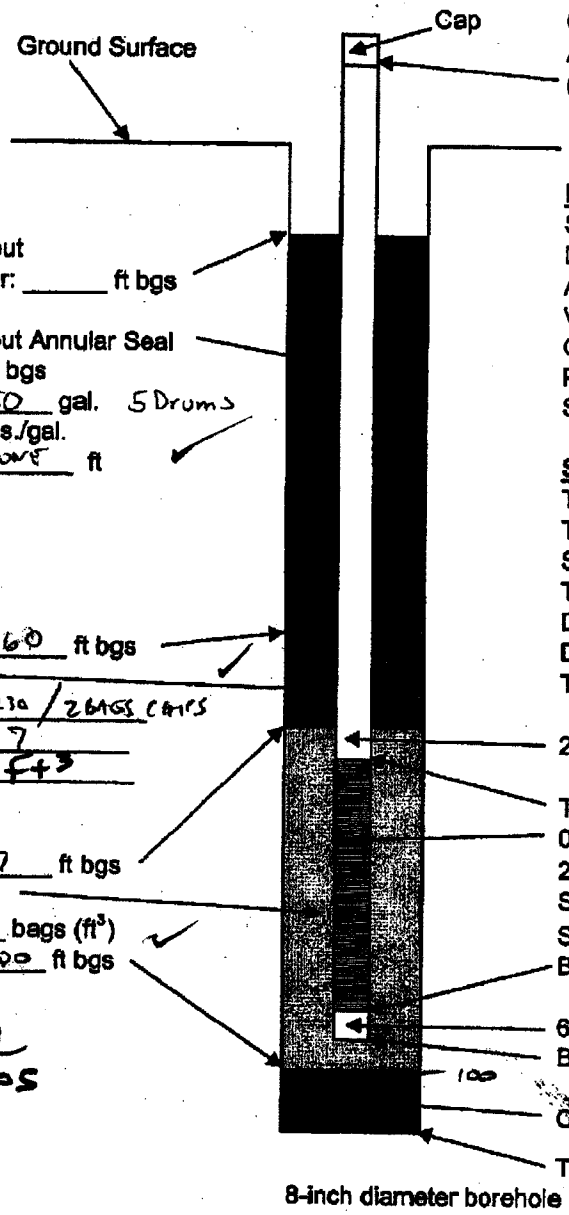

Cement/Bentonite Grout
Top of grout after 24 hr: _____ ft bgs

Cement/Bentonite Grout Annular Seal
Filled to 2 ft bgs
Volume Placed 250 gal. 5 Drums
Density ~15 lbs./gal.
Tremie Pipe Length NONE ft

Top of bentonite seal 60 ft bgs
Bentonite Seal
Type 1 BUCKET 3/8" TR30 / 2 BAGS CHIPS
Thickness (5 ft min) 7
Volume Placed: 3 ft³

Top of filter pack 67 ft bgs
No.3 Sand Filter Pack
Volume Placed 9.5 bags (ft³)
Bottom of filter pack 100 ft bgs

ELEVATION DATA

Stake Elevation	51.49
Datum Differential	NA
Adjusted Stake Elevation	51.49
Vertical Offset to Stake	NA
Ground Elevation at Well	51.49
Planned Screen Elevation	-16 to -46
Screen Interval (Depth)	-67½ to 97½ Adjusted down to 69½ to 99½

SURGE/DEPTH RECORD

TD Inside Well Before Surging	105
Top of Sand Before Surging	67
Surge Time	15 min
Top of Sand After Surging	68.5
Distance Sand Dropped	1.5
DTW Inside Well After Surging	
TD Inside Well After Surging	103

2-inch diameter SCH-40 Blank casing

Top of screen 69½ ft bgs
0.020 - inch Machine Sotted Screen
2-inch diameter, High Flow
SCH - 40 PVC
Screen Length 30 ft
Bottom of Screen 99½ ft bgs

6-inch long Threaded End Cap
Bottom of Cap 100 ft bgs

Collapsed Native Material 100 - 101

Total Depth of Borehole 101 ft bgs @1700

QA/QC: CMC
Date: 6/30/05

COMMENTS

Haley & Aldrich, Inc.
20040602_Well Construction Record Form VER 3.xls

1 December 2004

HALEY & ALDRICH

Well Construction Record
Parcel C Remediation Well Installation Program
Former Boeing C-6 Site
Los Angeles, California

Well ID: AW0028B
Start Date/Time: TU 6/28/05 15:00
Finish Date/Time: W 6/29/05 830
Driller/Rig: PAUL ALMANZA CME-8
Geologist: T.HAMMOND
Amendment Well Stick-up Height (minimum 24-in) 4.6 inches AGS

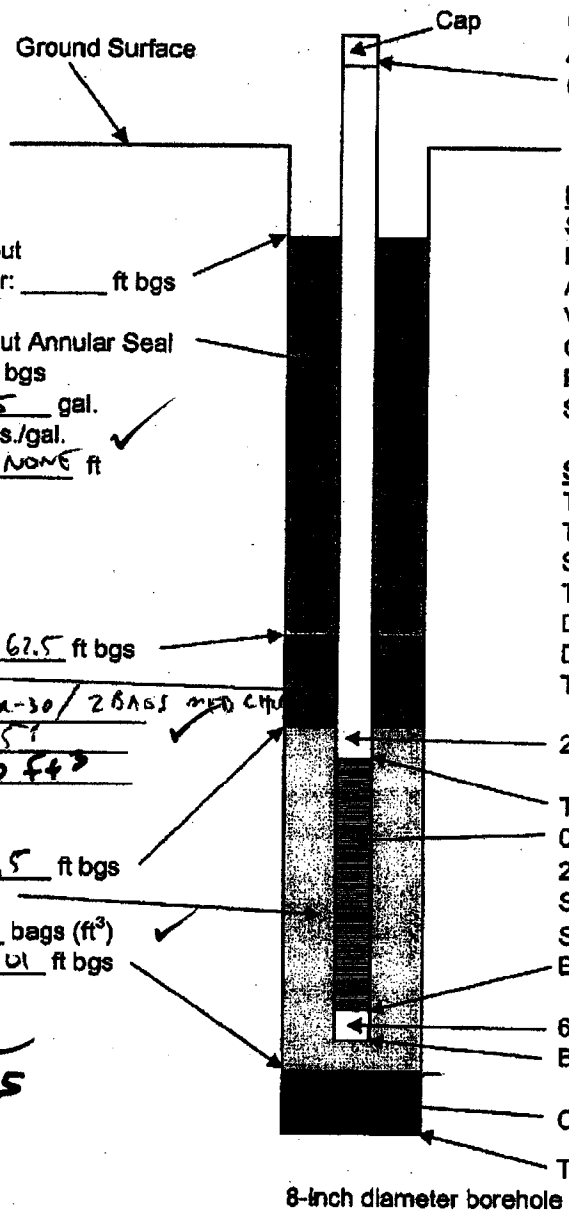

Cement/Bentonite Grout
Top of grout after 24 hr: _____ ft bgs

Cement/Bentonite Grout Annular Seal
Filled to 0 ft bgs
Volume Placed 225 gal.
Density 15 lbs./gal.
Tremie Pipe Length NONE ft

Top of bentonite seal 62.5 ft bgs
Bentonite Seal
Type 1 BUCKET 3/8" TR-30 / 2 BAGS MED CHIP
Thickness (5 ft min) 5'
Volume Placed: 3 ft³

Top of filter pack 67.5 ft bgs
No.3 Sand Filter Pack
Volume Placed 12 bags (ft³)
Bottom of filter pack 101 ft bgs

QA/QC: CME
Date: 6-30-05

ELEVATION DATA

Stake Elevation	51.15
Datum Differential	—
Adjusted Stake Elevation	~51
Vertical Offset to Stake	—
Ground Elevation at Well	~51
Planned Screen Elevation	-16 TO -46
Screen Interval (Depth)	67 TO 70

TDW = ~65
ADJUST DOWN 70 - 100

SURGE/DEPTH RECORD

TD Inside Well Before Surging	104 TOC
Top of Sand Before Surging	67
Surge Time	15 min
Top of Sand After Surging	69
Distance Sand Dropped	2
DTW Inside Well After Surging	—
TD Inside Well After Surging	103 TOC

2-inch diameter SCH-40 Blank casing

Top of screen 70.5 ft bgs
0.020 - inch Machine Sotted Screen
2-inch diameter, High Flow
SCH - 40 PVC
Screen Length 30 ft
Bottom of Screen 100.5 ft bgs

6-inch long Threaded End Cap
Bottom of Cap 101 ft bgs

Collapsed Native Material 101-103

Total Depth of Borehole 103 ft bgs
16:10 PM

COMMENTS

Haley & Aldrich, Inc.
20040602_Well Construction Record Form VER 3.xls

1 December 2004

HALEY & ALDRICH

Well Construction Record
Parcel C Remediation Well Installation Program
Former Boeing C-6 Site
Los Angeles, California

Well ID: AW0034 B
Start Date/Time: W 6/29/05 @7:30
Finish Date/Time: W 6/29/05 1015
Driller/Rig: RUBEN LARES CME-75
Geologist: T. HAMMOND

Amendment Well Stick-up Height (minimum 24-in) 5' inches AGS

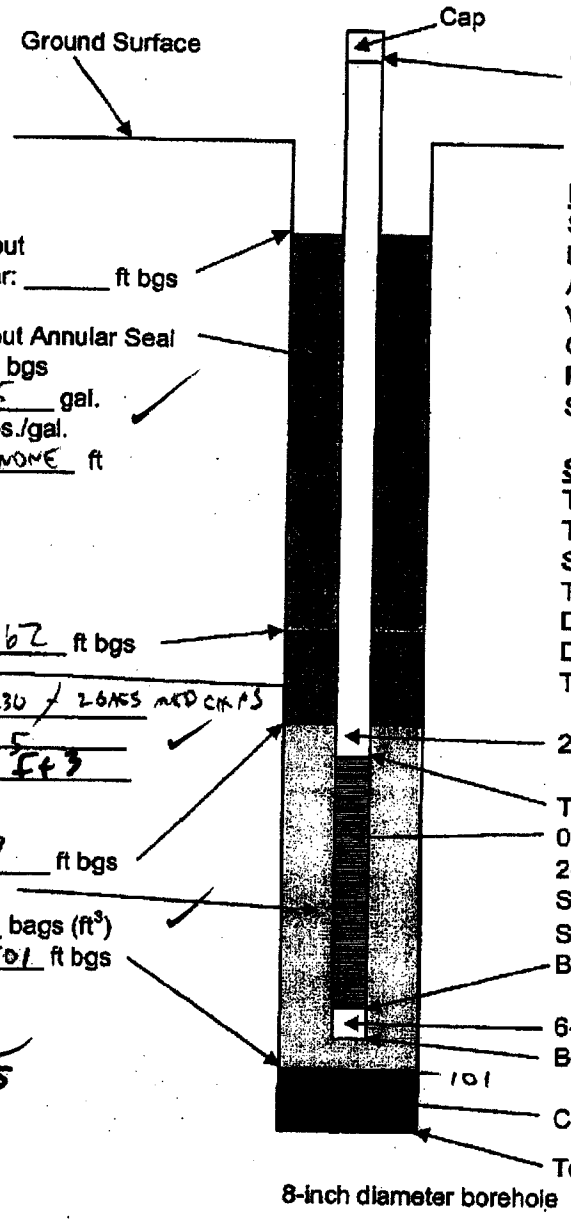

Cement/Bentonite Grout
Top of grout after 24 hr: _____ ft bgs

Cement/Bentonite Grout Annular Seal
Filled to 3 ft bgs
Volume Placed 225 gal.
Density 15 lbs./gal.
Tremie Pipe Length NONE ft

Top of bentonite seal 62 ft bgs
Bentonite Seal
Type 1 BUCKET 3/8" NC30 / 2 BAGS MED CHIPS
Thickness (5 ft min) 5
Volume Placed: 3 ft3

Top of filter pack 67 ft bgs
No.3 Sand Filter Pack
Volume Placed 9 bags (ft³)
Bottom of filter pack 101 ft bgs

QA/QC: CMC
Date: 6/30/05

ELEVATION DATA

Stake Elevation	51.45
Datum Differential	—
Adjusted Stake Elevation	~51.5
Vertical Offset to Stake	—
Ground Elevation at Well	~51.5
Planned Screen Elevation	-16 TO -46
Screen Interval (Depth)	67.5 TO 97.5

DTW = 65
ADJUST DOWN TO -100

SURGE/DEPTH RECORD

TD Inside Well Before Surging	103 TOC
Top of Sand Before Surging	67
Surge Time	15 min
Top of Sand After Surging	69
Distance Sand Dropped	2
DTW Inside Well After Surging	~65'
TD Inside Well After Surging	104

2-inch diameter SCH-40 Blank casing

Top of screen 70 ft bgs
0.020 - inch Machine Sotted Screen
2-inch diameter, High Flow
SCH - 40 PVC
Screen Length 30 ft
Bottom of Screen 100 ft bgs

6-inch long Threaded End Cap
Bottom of Cap 100.5 ft bgs

Collapsed Native Material 101 - 103

Total Depth of Borehole 103 ft bgs

COMMENTS

HALEY & ALDRICH

Well Construction Record
Parcel C Remediation Well Installation Program
Former Boeing C-6 Site
Los Angeles, California

Well ID: AW0166LB
Start Date/Time: 6-29-05/0802
Finish Date/Time: 6-29-05/1500
Driller/Rig: WDC/CME75/Miguel Alvarez
Geologist: G Androsko
Amendment Well Stick-up Height (minimum 24-in) 33" inches AGS

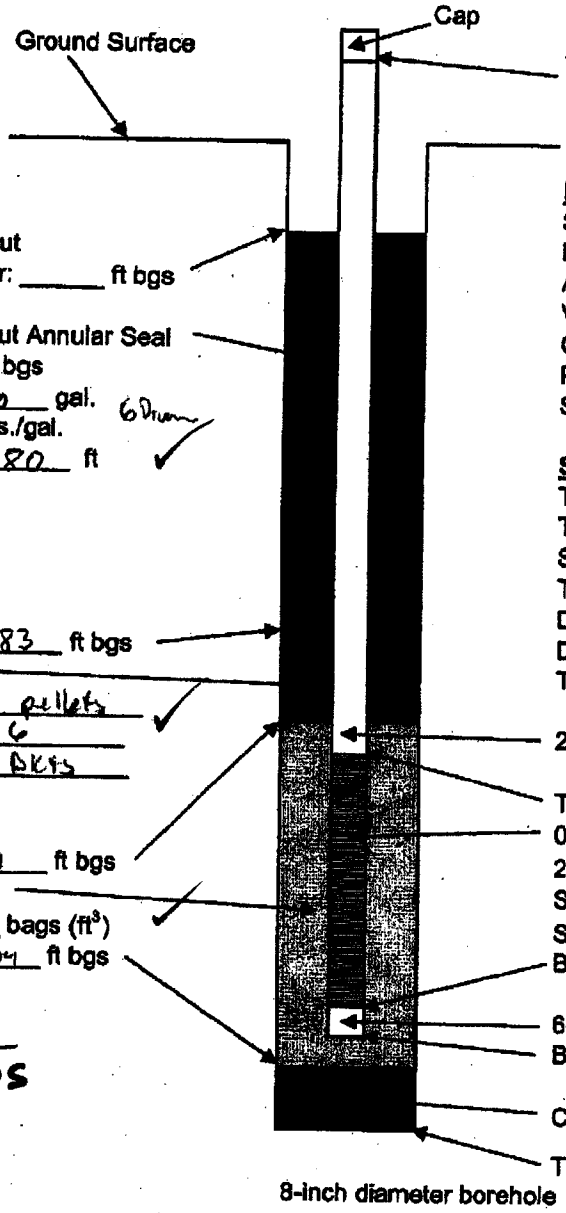

Cement/Bentonite Grout
Top of grout after 24 hr: _____ ft bgs

Cement/Bentonite Grout Annular Seal
Filled to 5 ft bgs
Volume Placed 300 gal. 6 Drum
Density 15 lbs./gal.
Tremie Pipe Length 80 ft

Top of bentonite seal 83 ft bgs
Bentonite Seal
Type 1/4" Coated pellets
Thickness (5 ft min) 6
Volume Placed: (3) Bags

Top of filter pack 89 ft bgs
No.3 Sand Filter Pack
Volume Placed 3 1/2 bags (ft^3)
Bottom of filter pack 104 ft bgs

QA/QC: CAC
Date: 6-30-05

ELEVATION DATA

Stake Elevation	55.69
Datum Differential	NA
Adjusted Stake Elevation	55.69
Vertical Offset to Stake	(1) ~ 1.69
Ground Elevation at Well	54.00
Planned Screen Elevation	-36 to -46
Screen Interval (Depth)	90 to 100

Adjusted down to 92 to 102

SURGE/DEPTH RECORD

TD Inside Well Before Surging	102 1/2
Top of Sand Before Surging	89
Surge Time	15 min
Top of Sand After Surging	89 1/2
Distance Sand Dropped	1/2
DTW Inside Well After Surging	69.11
TD Inside Well After Surging	102 1/2

2-inch diameter SCH-40 Blank casing

Top of screen 92 ft bgs
0.020 - inch Machine Sotted Screen
2-inch diameter, High Flow
SCH - 40 PVC
Screen Length 10 ft
Bottom of Screen 102 ft bgs

6-inch long Threaded End Cap
Bottom of Cap 102 1/2 ft bgs

Collapsed Native Material NONE

Total Depth of Borehole 103 1/2 ft bgs @ 0905

COMMENTS

(1) Original location set inside elevated curb strip
1030 Standing by waiting for cement delivery

HALEY & ALDRICH

Well Construction Record
Parcel C Remediation Well Installation Program
Former Boeing C-6 Site
Los Angeles, California

Well ID: AWØØ65UB
Start Date/Time: 6-16-05 /0815
Finish Date/Time: 6-16-05 /1500
Driller/Rig: WDC/CME 75/Miguel Alvarez
Geologist: G. Androski

Amendment Well Stick-up Height (minimum 24-in) _____ inches AGS

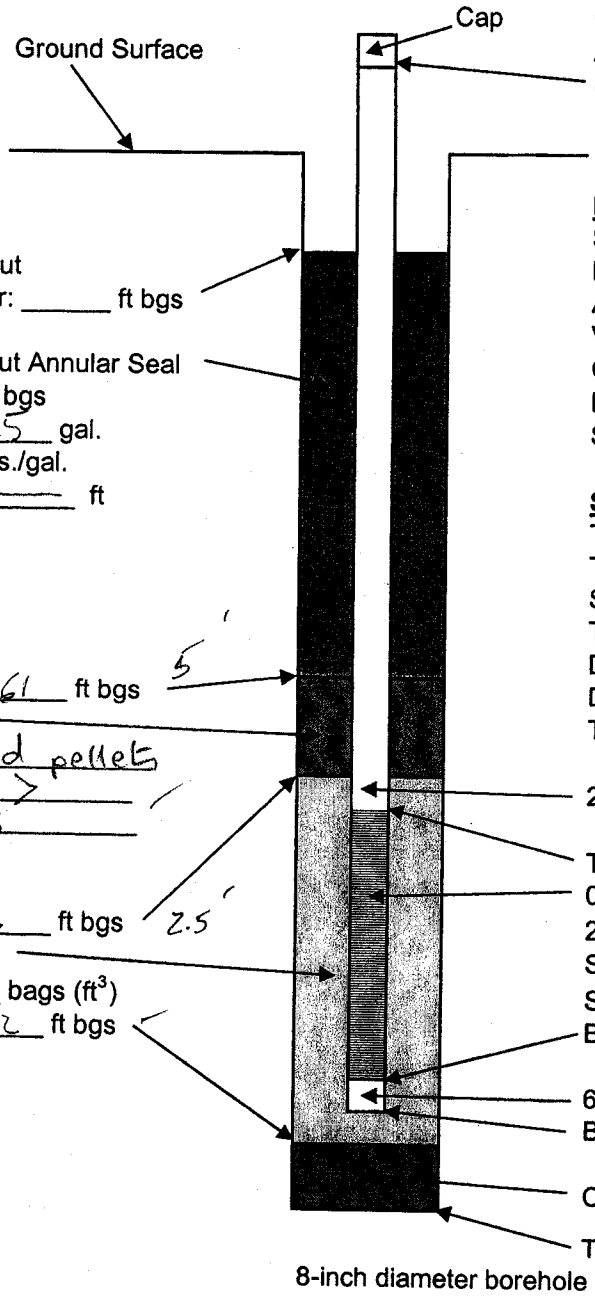

Cement/Bentonite Grout
Top of grout after 24 hr: _____ ft bgs

Cement/Bentonite Grout Annular Seal
Filled to 0 ft bgs
Volume Placed 225 gal.
Density 15 lbs./gal.
Tremie Pipe Length — ft

Top of bentonite seal 61 ft bgs 5'
Bentonite Seal
Type 1/4 coated pellets
Thickness (5 ft min) >
Volume Placed: 3

Top of filter pack 66 ft bgs 2.5'
No.3 Sand Filter Pack
Volume Placed 6 1/2 bags (ft³)
Bottom of filter pack 92 ft bgs

QA/QC: PRS
Date: 7/5/05

8-inch diameter borehole

ELEVATION DATA

Stake Elevation	51.00
Datum Differential	NA
Adjusted Stake Elevation	51.00
Vertical Offset to Stake	NA
Ground Elevation at Well	51.00
Planned Screen Elevation	-16 to -36 assume DTW @ 63
Screen Interval (Depth)	67 to 87 Adjusted down to 69 to 89

SURGE/DEPTH RECORD

TD Inside Well Before Surging	86 1/2
Top of Sand Before Surging	66
Surge Time	10 min
Top of Sand After Surging	68
Distance Sand Dropped	2 adds
DTW Inside Well After Surging	
TD Inside Well After Surging	87 2'

2-inch diameter SCH-40 Blank casing

Top of screen 68 1/2 ft bgs
0.020 - inch Machine Sotted Screen
2-inch diameter, High Flow
SCH - 40 PVC
Screen Length 20 ft
Bottom of Screen 88 1/2 ft bgs

6-inch long Threaded End Cap
Bottom of Cap 89 ft bgs

Collapsed Native Material

Total Depth of Borehole ~~93~~ 92 ft bgs ~~0910~~ 1240

COMMENTS

1030 Added 2 BKts of pellets - Sand @ 66'/pellets to 57' - too high could not gurantee seal - pulled well
Well was reamed and re-installed to these depths.

HALEY & ALDRICH

Well Construction Record
Parcel C Remediation Well Installation Program
Former Boeing C-6 Site
Los Angeles, California

Well ID: AW0019C
Start Date/Time: Th 6/30/05 12:15
Finish Date/Time: Th 6/30/05 15:45
Driller/Rig: RUBEN LARES CME-95
Geologist: T. HAMMOND

Amendment Well Stick-up Height (minimum 24-in) 2' inches AGS

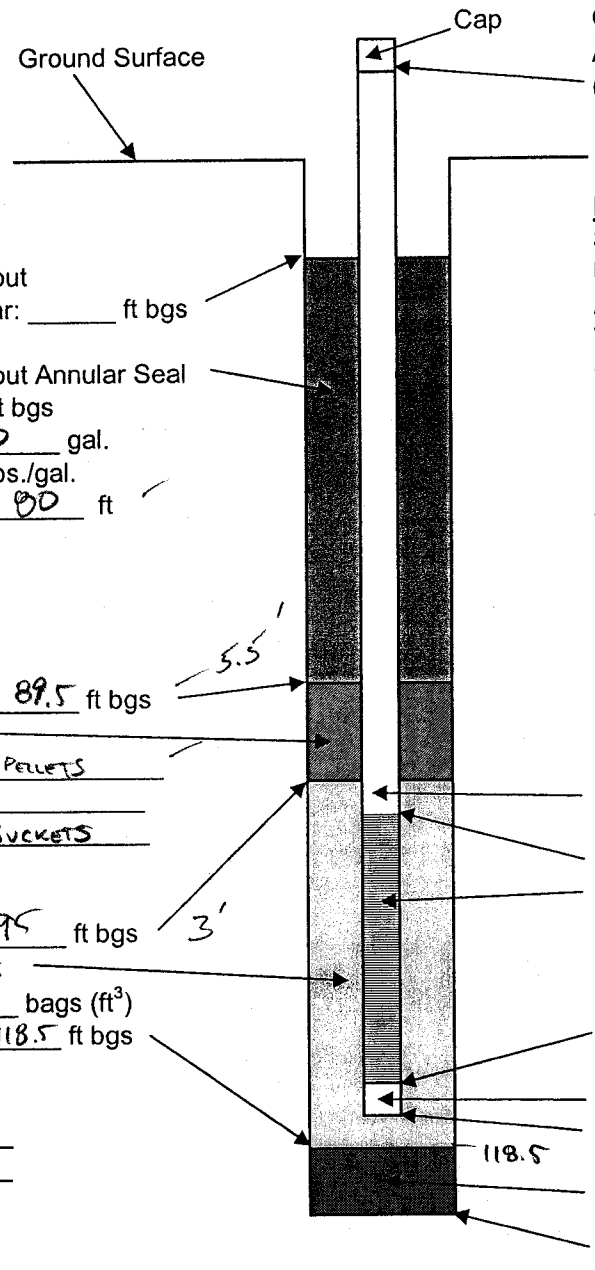

Cement/Bentonite Grout
Top of grout after 24 hr: _____ ft bgs

Cement/Bentonite Grout Annular Seal
Filled to 3 ft bgs
Volume Placed 250 gal.
Density 15 lbs./gal.
Tremie Pipe Length 80 ft

Top of bentonite seal 89.5 ft bgs
Bentonite Seal
Type 3/8" TR-30 PELLETS
Thickness (5 ft min) _____
Volume Placed: 3 BUCKETS

Top of filter pack 95 ft bgs
No.3 Sand Filter Pack
Volume Placed 9 bags (ft^3)
Bottom of filter pack 118.5 ft bgs

QA/QC: PR
Date: _____

ELEVATION DATA

Stake Elevation	52.78
Datum Differential	—
Adjusted Stake Elevation	~53
Vertical Offset to Stake	—
Ground Elevation at Well	~53
Planned Screen Elevation	-45 TO -65
Screen Interval (Depth)	98 TO 118

SURGE/DEPTH RECORD

TD Inside Well Before Surging	118' TOC
Top of Sand Before Surging	95'
Surge Time	15 MIN
Top of Sand After Surging	96
Distance Sand Dropped	1
DTW Inside Well After Surging	~67
TD Inside Well After Surging	119 TOC

2-inch diameter SCH-40 Blank casing

Top of screen 98 ft bgs
0.020 - inch Machine Sotted Screen
2-inch diameter, High Flow
SCH - 80 PVC
Screen Length 20 ft
Bottom of Screen 118 ft bgs

6-inch long Threaded End Cap
Bottom of Cap 118.5 ft bgs

Collapsed Native Material

Total Depth of Borehole 123' ft bgs

COMMENTS

STAKED LOCATION TOO CLOSE TO BUILDING TO ACCESS, MOVED WELL ~5' NORTH.

HALEY & ALDRICH

Well Construction Record
Parcel C Remediation Well Installation Program
Former Boeing C-6 Site
Los Angeles, California

Well ID: AW0167LB
Start Date/Time: Th 6/30/05 8:00
Finish Date/Time: Th 6/30/05 1045
Driller/Rig: RUBEN LARES CME-95
Geologist: T. HAMMOND

Amendment Well Stick-up Height (minimum 24-in) 4.5 inches AGS

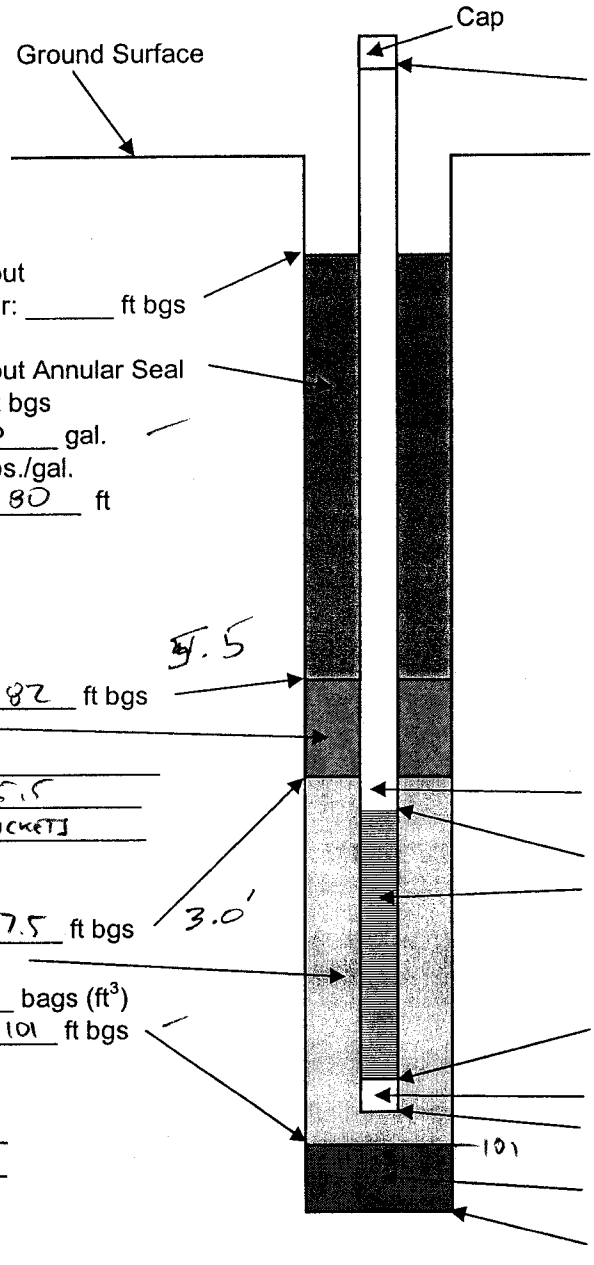

Cement/Bentonite Grout
Top of grout after 24 hr: _____ ft bgs

Cement/Bentonite Grout Annular Seal
Filled to 3 ft bgs
Volume Placed 350 gal.
Density 15 lbs./gal.
Tremie Pipe Length 80 ft

Top of bentonite seal 82 ft bgs
Bentonite Seal
Type 3/8" TR 30
Thickness (5 ft min) 5.5
Volume Placed: 3 BUCKETS

Top of filter pack 87.5 ft bgs
No.3 Sand Filter Pack
Volume Placed 4.5 bags (ft^3)
Bottom of filter pack 101 ft bgs

QA/QC: PRS
Date: 7/5/05

ELEVATION DATA

Stake Elevation	55.96
Datum Differential	—
Adjusted Stake Elevation	~56
Vertical Offset to Stake	~1.5
Ground Elevation at Well	~54.5
Planned Screen Elevation	-36 TO -46
Screen Interval (Depth)	90.5 TO 100.5

SURGE/DEPTH RECORD

TD Inside Well Before Surging	103 TOC
Top of Sand Before Surging	87.5
Surge Time	15 MIN
Top of Sand After Surging	88
Distance Sand Dropped	0.5
DTW Inside Well After Surging	~67
TD Inside Well After Surging	104

2-inch diameter SCH-40 Blank casing

Top of screen 90.5 ft bgs
0.020 - inch Machine Sotted Screen
2-inch diameter, High Flow
SCH - 40 PVC
Screen Length 10 ft
Bottom of Screen 100.5 ft bgs

6-inch long Threaded End Cap
Bottom of Cap 101 ft bgs

Collapsed Native Material

Total Depth of Borehole 105 ft bgs
900AM

8-inch diameter borehole

COMMENTS

HALEY & ALDRICH

Well Construction Record
Parcel C Remediation Well Installation Program
Former Boeing C-6 Site
Los Angeles, California

Well ID: AW00 11B
Start Date/Time: Th 6-30-05 / 1220
Finish Date/Time: 6-30-05 / 1440
Driller/Rig: WDC / CME 85 / Ted Nichols
Geologist: G. Androsko

Amendment Well Stick-up Height (minimum 24-in) 72 inches AGS

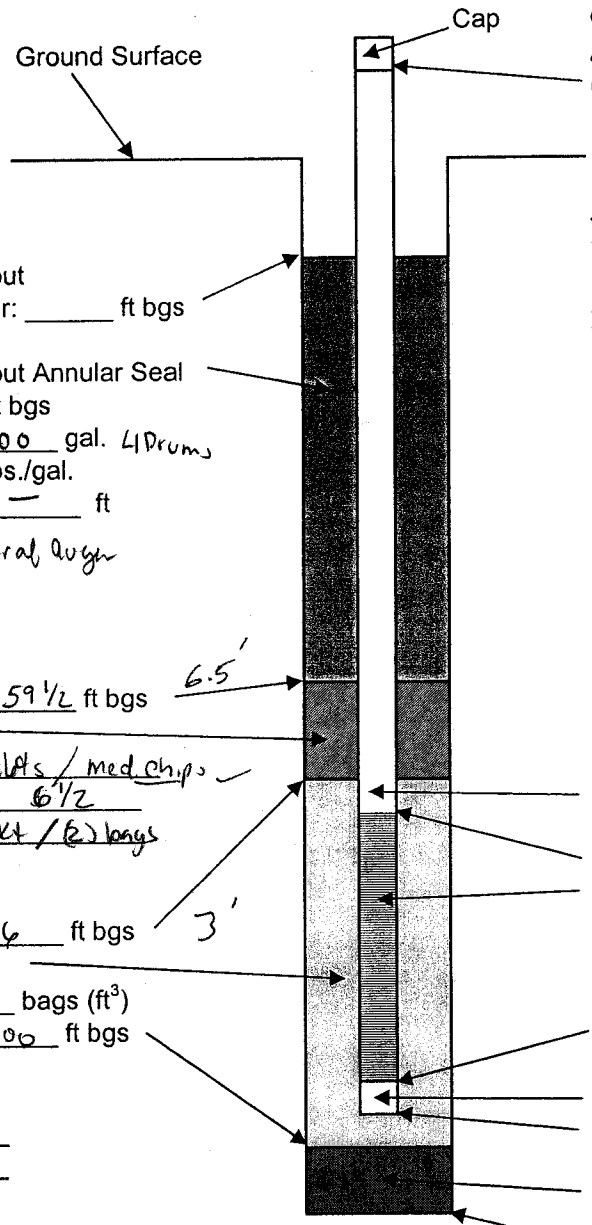

Cement/Bentonite Grout
Top of grout after 24 hr: _____ ft bgs

Cement/Bentonite Grout Annular Seal
Filled to 2 ft bgs
Volume Placed 200 gal. 4 Drums
Density 15 lbs./gal.
Tremie Pipe Length — ft
Used centeral auger

Top of bentonite seal 59 1/2 ft bgs
Bentonite Seal
Type 3/8" Coated pellets / med chips
Thickness (5 ft min) 6 1/2
Volume Placed: (1) 3kt / (2) bags

Top of filter pack 66 ft bgs
No.3 Sand Filter Pack
Volume Placed 9 bags (ft^3)
Bottom of filter pack 100 ft bgs

QA/QC: PRS
Date: 7/5/05

ELEVATION DATA

Stake Elevation	51.28
Datum Differential	NA
Adjusted Stake Elevation	51.28
Vertical Offset to Stake	NA
Ground Elevation at Well	51.28
Planned Screen Elevation	-16 to -46
Screen Interval (Depth)	-67 to -97
	Adjusted down to -69 to -99

SURGE/DEPTH RECORD

TD Inside Well Before Surging	104 70C
Top of Sand Before Surging	58 1/2
Surge Time	15 min
Top of Sand After Surging	59 1/2
Distance Sand Dropped	1
DTW Inside Well After Surging	64.27 70C
TD Inside Well After Surging	104 70C

2-inch diameter SCH-40 Blank casing

Top of screen 69 ft bgs
0.020 - inch Machine Sotted Screen
2-inch diameter, High Flow
SCH - 40 PVC
Screen Length 30 ft
Bottom of Screen 99 ft bgs

6-inch long Threaded End Cap
Bottom of Cap 99 1/2 ft bgs

Collapsed Native Material

Total Depth of Borehole 102 ft bgs

8-inch diameter borehole

COMMENTS

HALEY & ALDRICH

Well Construction Record
Parcel C Remediation Well Installation Program
Former Boeing C-6 Site
Los Angeles, California

Well ID: AW0023B
Start Date/Time: W 6-29-05/0800
Finish Date/Time: Th 6-30-05/1445
Driller/Rig: WDC/CME75/Nacho
Geologist: G. Andrasko
Amendment Well Stick-up Height (minimum 24-in) 50 inches AGS

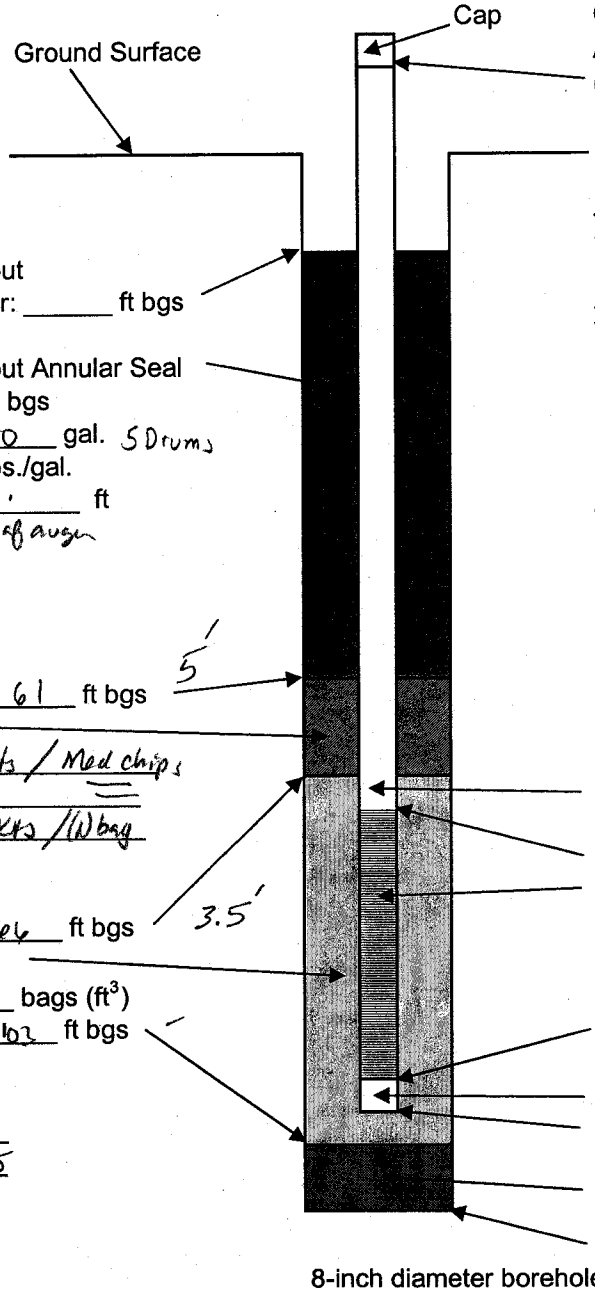

Cement/Bentonite Grout
Top of grout after 24 hr: _____ ft bgs

Cement/Bentonite Grout Annular Seal
Filled to 1 ft bgs
Volume Placed 250 gal. 5 Drums
Density 15 lbs./gal.
Tremie Pipe Length ' ft
Used center of auger

Top of bentonite seal 61 ft bgs
Bentonite Seal
Type 3/8" Cocked pellets / Med chips
Thickness (5 ft min) ____
Volume Placed: (2) BKts / (1) bag

Top of filter pack 66 ft bgs
No.3 Sand Filter Pack
Volume Placed 8 bags (ft^3)
Bottom of filter pack 102 ft bgs

QA/QC: [signature]
Date: 7/5/05

ELEVATION DATA

Stake Elevation	51.71
Datum Differential	NA
Adjusted Stake Elevation	51.71
Vertical Offset to Stake	NA
Ground Elevation at Well	51.71
Planned Screen Elevation	-16 to -46
Screen Interval (Depth)	67½ to 97½ Adjusted down to 69½ to 99½

SURGE/DEPTH RECORD

TD Inside Well Before Surging	102
Top of Sand Before Surging	66
Surge Time	15 min
Top of Sand After Surging	70
Distance Sand Dropped	4
DTW Inside Well After Surging	67.97
TD Inside Well After Surging	102

2-inch diameter SCH-40 Blank casing

Top of screen 69½ ft bgs
0.020 - inch Machine Sotted Screen
2-inch diameter, High Flow
SCH - 40 PVC
Screen Length 30 ft
Bottom of Screen 99½ ft bgs

6-inch long Threaded End Cap
Bottom of Cap 100 ft bgs

Collapsed Native Material

Total Depth of Borehole 103 ft bgs 6-30-05 1120

8-inch diameter borehole

COMMENTS

0905 > 50 ppm in breathing zone - shut down rig @ 65'
6-30-05 @ 1045 Restarted

HALEY & ALDRICH

Well Construction Record
Parcel C Remediation Well Installation Program
Former Boeing C-6 Site
Los Angeles, California

Well ID: AW0013C
Start Date/Time: W 6-29-05 / 1520
Finish Date/Time: Th 6/30/05 1200
Driller/Rig: WDC / CME 85 / Ted Nichols
Geologist: G. Androsko

Amendment Well Stick-up Height (minimum 24-in) 38 inches AGS

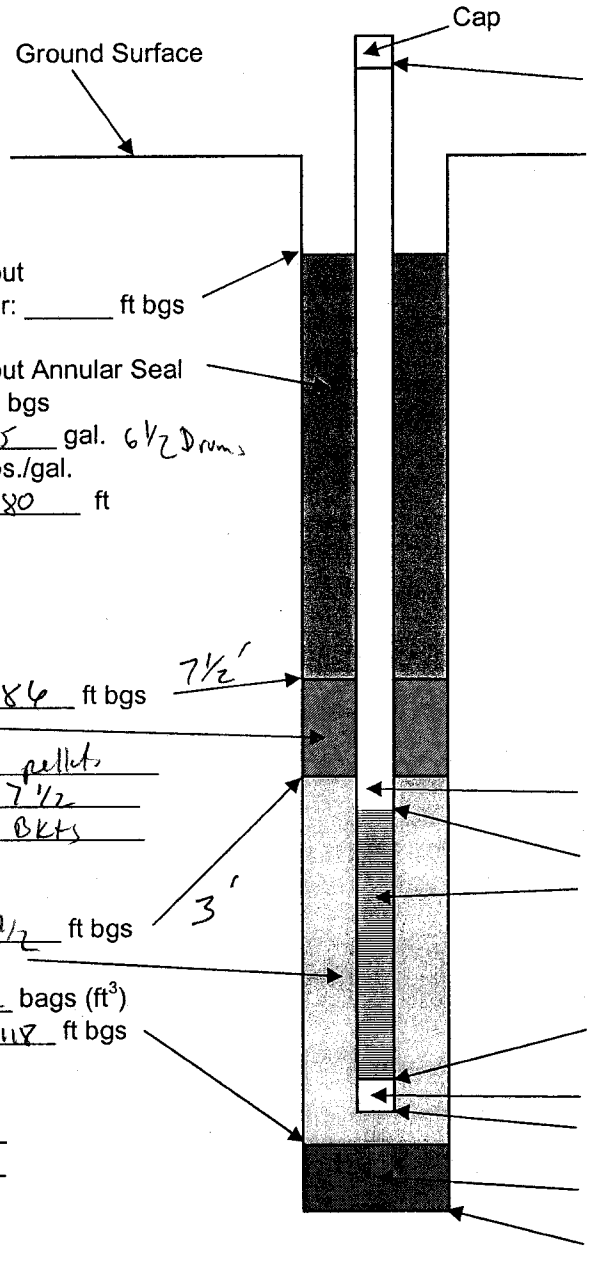

Cement/Bentonite Grout
Top of grout after 24 hr: _____ ft bgs

Cement/Bentonite Grout Annular Seal
Filled to 1 ft bgs
Volume Placed 325 gal. 6½ Drums
Density 15 lbs./gal.
Tremie Pipe Length 80 ft

Top of bentonite seal 86 ft bgs
Bentonite Seal
Type 3/8" Coated pellets
Thickness (5 ft min) 7½
Volume Placed: (3) Bkts

Top of filter pack 93½ ft bgs
No.3 Sand Filter Pack
Volume Placed 5½ bags (ft^3)
Bottom of filter pack 118 ft bgs

QA/QC: PS
Date: 7/5/05

ELEVATION DATA

Stake Elevation	51.57
Datum Differential	—
Adjusted Stake Elevation	~51.5
Vertical Offset to Stake	—
Ground Elevation at Well	~51.5
Planned Screen Elevation	-45 TO -65
Screen Interval (Depth)	96.5 TO 116.5

SURGE/DEPTH RECORD

TD Inside Well Before Surging	116½
Top of Sand Before Surging	93
Surge Time	15 min
Top of Sand After Surging	93½
Distance Sand Dropped	½'
DTW Inside Well After Surging	67.27
TD Inside Well After Surging	116½

2-inch diameter SCH-40 Blank casing

Top of screen 96½ ft bgs
0.020 - inch Machine Sotted Screen
2-inch diameter, ~~High Flow~~
SCH - 80 PVC
Screen Length 20 ft
Bottom of Screen 116½ ft bgs

6-inch long Threaded End Cap
Bottom of Cap 117 ft bgs

Collapsed Native Material

Total Depth of Borehole 118 ft bgs

COMMENTS

- Drilled to 90' and stopped for the day
- 6/30/05 0740 Continued drilling to depth
- 0815 Standing by waiting for screen delivery

HALEY & ALDRICH

23B

Well Construction Record
Parcel C Remediation Well Installation Program
Former Boeing C-6 Site
Los Angeles, California

Well ID: AW0015B
Start Date/Time: W 6-29-05/0930
Finish Date/Time: Th 6-30-05/1010
Driller/Rig: WDC/CME75/Nacho
Geologist: G. Androsko

Amendment Well Stick-up Height (minimum 24-in) 35 inches AGS

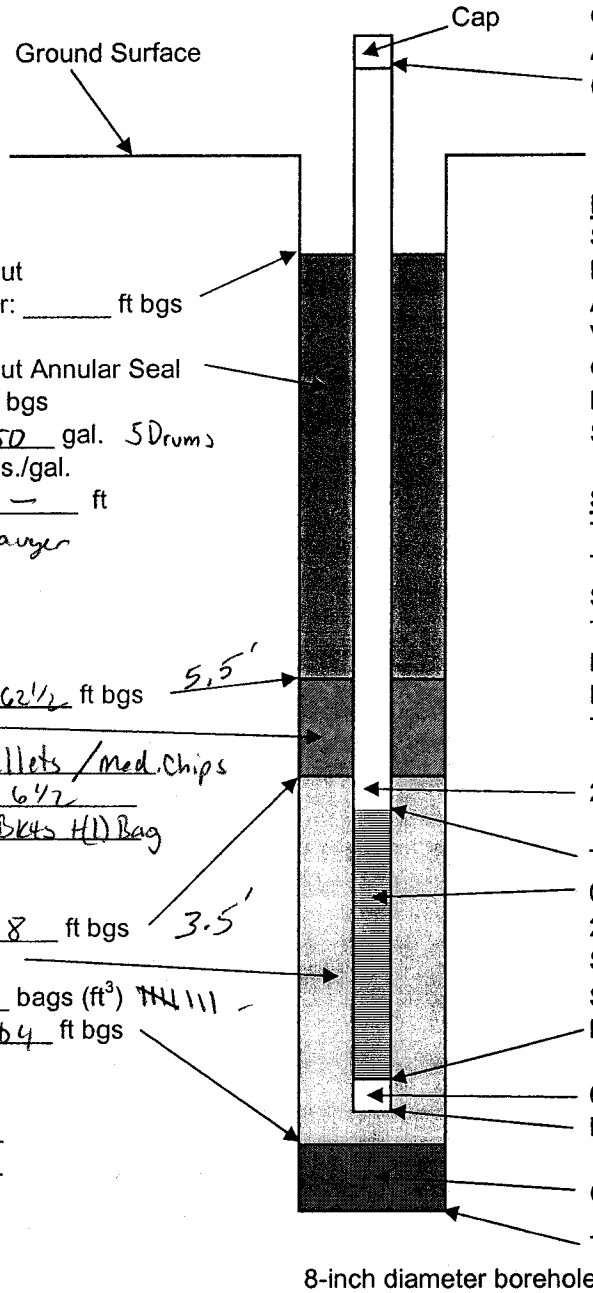

Cement/Bentonite Grout
Top of grout after 24 hr: _____ ft bgs

Cement/Bentonite Grout Annular Seal
Filled to 1 ft bgs
Volume Placed 250 gal. 5 Drums
Density 15 lbs./gal.
Tremie Pipe Length — ft
Used center of auger

Top of bentonite seal 62½ ft bgs
Bentonite Seal
Type ¼" Coated pellets / Med. Chips
Thickness (5 ft min) 6½
Volume Placed: (2) Bkts H(1) Bag

Top of filter pack 68 ft bgs
No.3 Sand Filter Pack
Volume Placed 9 bags (ft³) ~~||||~~ |||
Bottom of filter pack 104 ft bgs

QA/QC: PRS
Date: 7/5/05

8-inch diameter borehole

ELEVATION DATA

Stake Elevation	53.25
Datum Differential	NA
Adjusted Stake Elevation	53.25
Vertical Offset to Stake	NA
Ground Elevation at Well	53.25
Planned Screen Elevation	-16 to -96
Screen Interval (Depth)	-69 to -99
	Adjusted down to -71 to 101

SURGE/DEPTH RECORD

TD Inside Well Before Surging	103 70C
Top of Sand Before Surging	68
Surge Time	15 min
Top of Sand After Surging	65
Distance Sand Dropped	3
DTW Inside Well After Surging	68.27
TD Inside Well After Surging	103

2-inch diameter SCH-40 Blank casing

Top of screen 71½ ft bgs
0.020 - inch Machine Sotted Screen
2-inch diameter, High Flow
SCH - 40 PVC
Screen Length 30 ft
Bottom of Screen 101½ ft bgs

6-inch long Threaded End Cap
Bottom of Cap 102 ft bgs

Collapsed Native Material

Total Depth of Borehole 104 ft bgs @ 1058

COMMENTS

Hand augered to 6'
1130 Nacho pulled off location per Boeings concerns over rig spacing - 105' auger in hole

HALEY & ALDRICH

Well Construction Record
Parcel C Remediation Well Installation Program
Former Boeing C-6 Site
Los Angeles, California

Well ID: AW0021B
Start Date/Time: Th 6-30-05/1510
Finish Date/Time: Th 6/30/05 17:15
Driller/Rig: WOC/CME 75/Ted Aldridge
Geologist: G. Anderson
Amendment Well Stick-up Height (minimum 24-in) 51.5' inches AGS

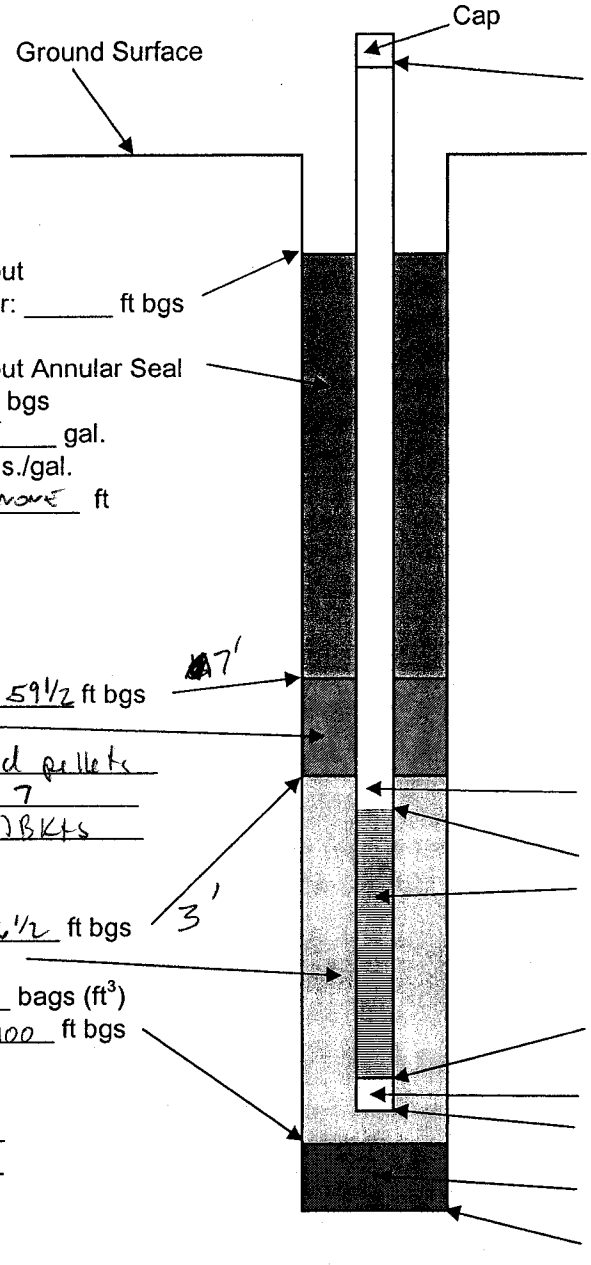

Cement/Bentonite Grout
Top of grout after 24 hr: _____ ft bgs

Cement/Bentonite Grout Annular Seal
Filled to 3 ft bgs
Volume Placed 225 gal.
Density 15 lbs./gal.
Tremie Pipe Length none ft

Top of bentonite seal 59½ ft bgs
Bentonite Seal
Type 3/8" Coated pellets
Thickness (5 ft min) 7
Volume Placed: (3) Bkts

Top of filter pack 66½ ft bgs
No.3 Sand Filter Pack
Volume Placed 10½ bags (ft^3)
Bottom of filter pack 100 ft bgs

QA/QC: PRS
Date: 7/5/05

ELEVATION DATA

Stake Elevation	51.32
Datum Differential	NA
Adjusted Stake Elevation	51.32
Vertical Offset to Stake	NA
Ground Elevation at Well	51.32
Planned Screen Elevation	-16 to -46
Screen Interval (Depth)	-67½ to -97½ Adjusted down to -69½ to -99½

SURGE/DEPTH RECORD

TD Inside Well Before Surging	100 TOC
Top of Sand Before Surging	66
Surge Time	15 min
Top of Sand After Surging	68
Distance Sand Dropped	2
DTW Inside Well After Surging	
TD Inside Well After Surging	100 TOC

2-inch diameter SCH-40 Blank casing

Top of screen 69½ ft bgs
0.020 - inch Machine Sotted Screen
2-inch diameter, High Flow
SCH - 40 PVC
Screen Length 30 ft
Bottom of Screen 99½ ft bgs

6-inch long Threaded End Cap
Bottom of Cap 100 ft bgs

Collapsed Native Material

Total Depth of Borehole 100 ft bgs 1610

COMMENTS

HALEY & ALDRICH

Well Construction Record
Parcel C Remediation Well Installation Program
Former Boeing C-6 Site
Los Angeles, California

Well ID: AW~~07~~ 18B
Start Date/Time: Th 6-30-05 / 1505
Finish Date/Time: Th 6/30/05 1130
Driller/Rig: WDC/CME 75/Nacho IGNACIO GUTIERR
Geologist: G. Androsko
Amendment Well Stick-up Height (minimum 24-in) 4.5 inches AGS

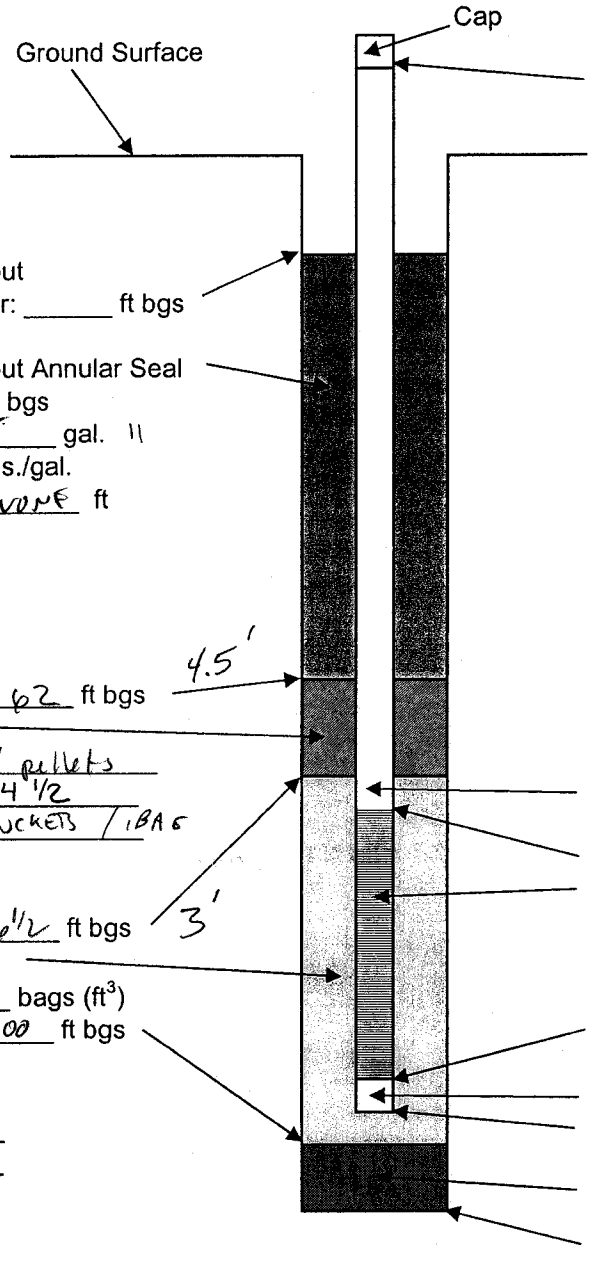

Cement/Bentonite Grout
Top of grout after 24 hr: _____ ft bgs

Cement/Bentonite Grout Annular Seal
Filled to 0 ft bgs
Volume Placed 4.5 gal.
Density 15 lbs./gal.
Tremie Pipe Length NONE ft

Top of bentonite seal 62 ft bgs
Bentonite Seal
Type 3/8" Coated pellets
Thickness (5 ft min) 4 1/2
Volume Placed: 3 BUCKETS / 1 BAG

Top of filter pack 66 1/2 ft bgs
No.3 Sand Filter Pack
Volume Placed 10 bags (ft^3)
Bottom of filter pack 100 ft bgs

QA/QC: PRS
Date: 7/5/05

ELEVATION DATA

Stake Elevation	~51.50
Datum Differential	
Adjusted Stake Elevation	
Vertical Offset to Stake	
Ground Elevation at Well	
Planned Screen Elevation	-16 to -46
Screen Interval (Depth)	-67 1/2 to -97 1/2 Adjusted down to -69 1/2 to -99 1/2

SURGE/DEPTH RECORD

TD Inside Well Before Surging	102
Top of Sand Before Surging	66
Surge Time	15 m
Top of Sand After Surging	68
Distance Sand Dropped	2
DTW Inside Well After Surging	-65
TD Inside Well After Surging	102 (TOC)

2-inch diameter SCH-40 Blank casing

Top of screen 69 1/2 ft bgs
0.020 - inch Machine Sotted Screen
2-inch diameter, High Flow
SCH - 40 PVC
Screen Length 30 ft
Bottom of Screen 99 1/2 ft bgs

6-inch long Threaded End Cap
Bottom of Cap 100 ft bgs

Collapsed Native Material

Total Depth of Borehole 103 ft bgs 1615

COMMENTS

HALEY & ALDRICH

Well Construction Record
Parcel C Remediation Well Installation Program
Former Boeing C-6 Site
Los Angeles, California

Well ID: AW0014B
Start Date/Time: R 6/30/05 16:15
Finish Date/Time: F 7/1/05 11:00
Driller/Rig: RUBEN LARES CME-95
Geologist: T. HAMMOND

Amendment Well Stick-up Height (minimum 24-in) ~3.5 inches AGS

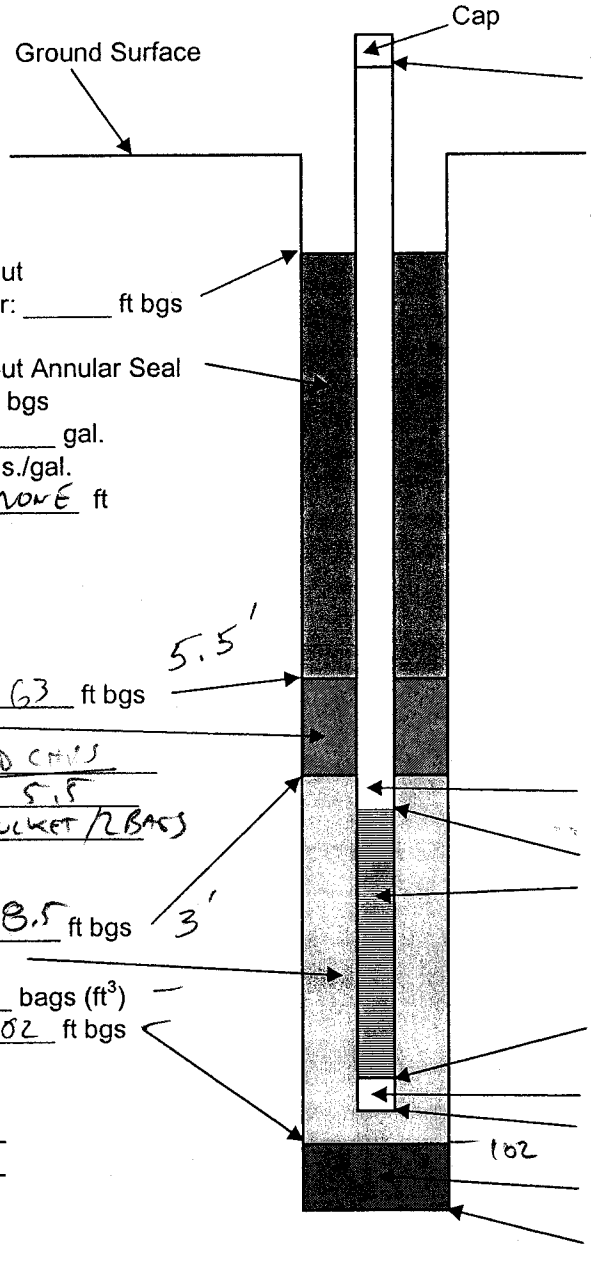

Cement/Bentonite Grout
Top of grout after 24 hr: _____ ft bgs

Cement/Bentonite Grout Annular Seal
Filled to 0 ft bgs
Volume Placed 225 gal.
Density 15 lbs./gal.
Tremie Pipe Length NONE ft

Top of bentonite seal 63 ft bgs
Bentonite Seal
Type 1/4 TR 30 / MED CHIPS
Thickness (5 ft min) 5.5
Volume Placed: 1 BUCKET / 2 BAGS

Top of filter pack 68.5 ft bgs
No.3 Sand Filter Pack
Volume Placed 8.5 bags (ft^3)
Bottom of filter pack 102 ft bgs

QA/QC: RK
Date: 7/5/05

ELEVATION DATA

Stake Elevation	52.70 @ 14c
Datum Differential	—
Adjusted Stake Elevation	52.70
Vertical Offset to Stake	~.20
Ground Elevation at Well	52.5
Planned Screen Elevation	-16 TO -46
Screen Interval (Depth)	68.5 TO 98.5

DTW ~67
ADJUST DOWN 72 TO 1

SURGE/DEPTH RECORD

TD Inside Well Before Surging	102 TOC
Top of Sand Before Surging	69
Surge Time	15 min
Top of Sand After Surging	69.5
Distance Sand Dropped	0.5
DTW Inside Well After Surging	69.31
TD Inside Well After Surging	100.5

2-inch diameter SCH-40 Blank casing

Top of screen 71.5 ft bgs
0.020 - inch Machine Sotted Screen
2-inch diameter, High Flow
SCH - 40 PVC
Screen Length 30 ft
Bottom of Screen 101.5 ft bgs

6-inch long Threaded End Cap
Bottom of Cap 102 ft bgs

Collapsed Native Material

Total Depth of Borehole 103 ft bgs

COMMENTS

THE SURGE BLOCK GOT LOCKED IN THE SCREEN AFTER SURGING - but freed.

HALEY & ALDRICH

Well Construction Record
Parcel C Remediation Well Installation Program
Former Boeing C-6 Site
Los Angeles, California

Well ID: AW0013B
Start Date/Time: 7-1-05/0800
Finish Date/Time: 7-1-05/1130
Driller/Rig: WDC/CME75/Nacho
Geologist: G. Androsico

Amendment Well Stick-up Height (minimum 24-in) 36 inches AGS

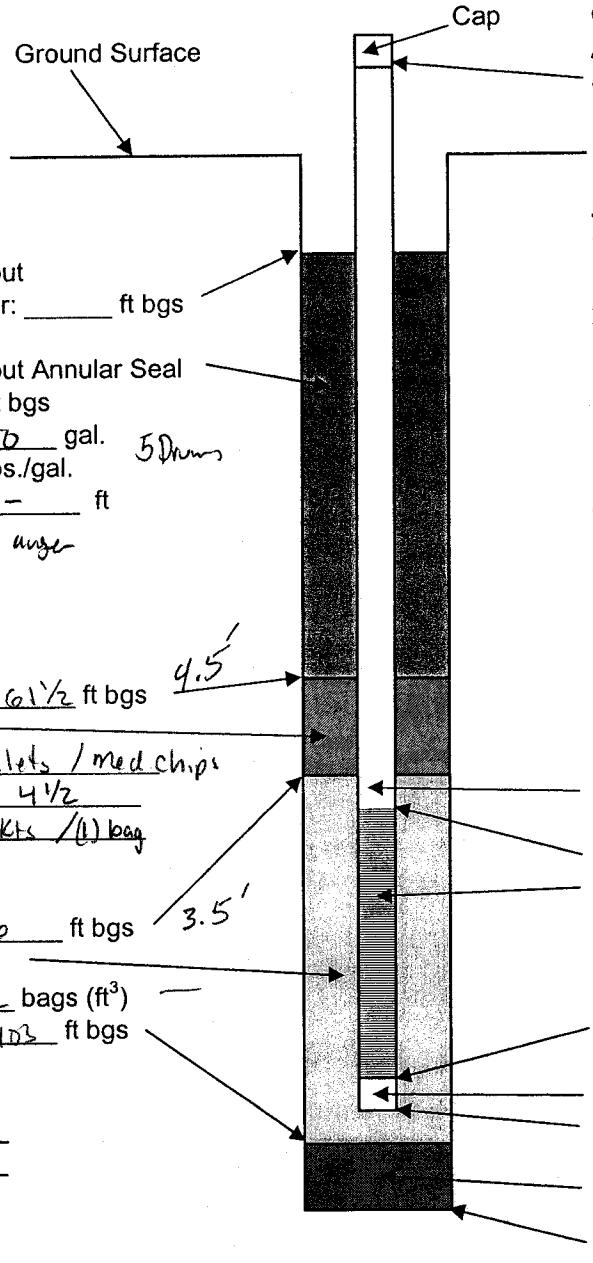

Cement/Bentonite Grout
Top of grout after 24 hr: _____ ft bgs

Cement/Bentonite Grout Annular Seal
Filled to 6 ft bgs
Volume Placed 250 gal. 5 Drums
Density 15 lbs./gal.
Tremie Pipe Length – ft
Used center of auger

Top of bentonite seal 61½ ft bgs
Bentonite Seal
Type ¼" Coated pellets / med chips
Thickness (5 ft min) 4½
Volume Placed: (2) BKts / (1) bag

Top of filter pack 66 ft bgs
No.3 Sand Filter Pack
Volume Placed 8½ bags (ft^3)
Bottom of filter pack 103 ft bgs

QA/QC: ARS
Date: 7/5/05

ELEVATION DATA

Stake Elevation	51.57
Datum Differential	NA
Adjusted Stake Elevation	51.57
Vertical Offset to Stake	NA
Ground Elevation at Well	51.57
Planned Screen Elevation	-16 to -46
Screen Interval (Depth)	67½ to 97½ Adjusted down to 69½ to 99½

SURGE/DEPTH RECORD

TD Inside Well Before Surging	102
Top of Sand Before Surging	66
Surge Time	15 min
Top of Sand After Surging	68
Distance Sand Dropped	2
DTW Inside Well After Surging	
TD Inside Well After Surging	102

2-inch diameter SCH-40 Blank casing

Top of screen 69½ ft bgs
0.020 - inch Machine Sotted Screen
2-inch diameter, High Flow
SCH - 40 PVC
Screen Length 30 ft
Bottom of Screen 99½ ft bgs

6-inch long Threaded End Cap
Bottom of Cap 100 ft bgs

Collapsed Native Material

Total Depth of Borehole 103 ft bgs

COMMENTS

Replacement well for initial AW0013C - Located 10.0 feet due north of initial AW0013C
PRS 7/19/05

HALEY & ALDRICH

Well Construction Record
Parcel C Remediation Well Installation Program
Former Boeing C-6 Site
Los Angeles, California

Well ID: AW0013C
Start Date/Time: Tu 7/12/05 7:45
Finish Date/Time: Wed 7/13/05 9:00
Driller/Rig: TED NICHOLS CME-85
Geologist: TRAVIS HAMMOND

Amendment Well Stick-up Height (minimum 24-in) 3' 4" ~~inches~~ AGS
i.e. 40"

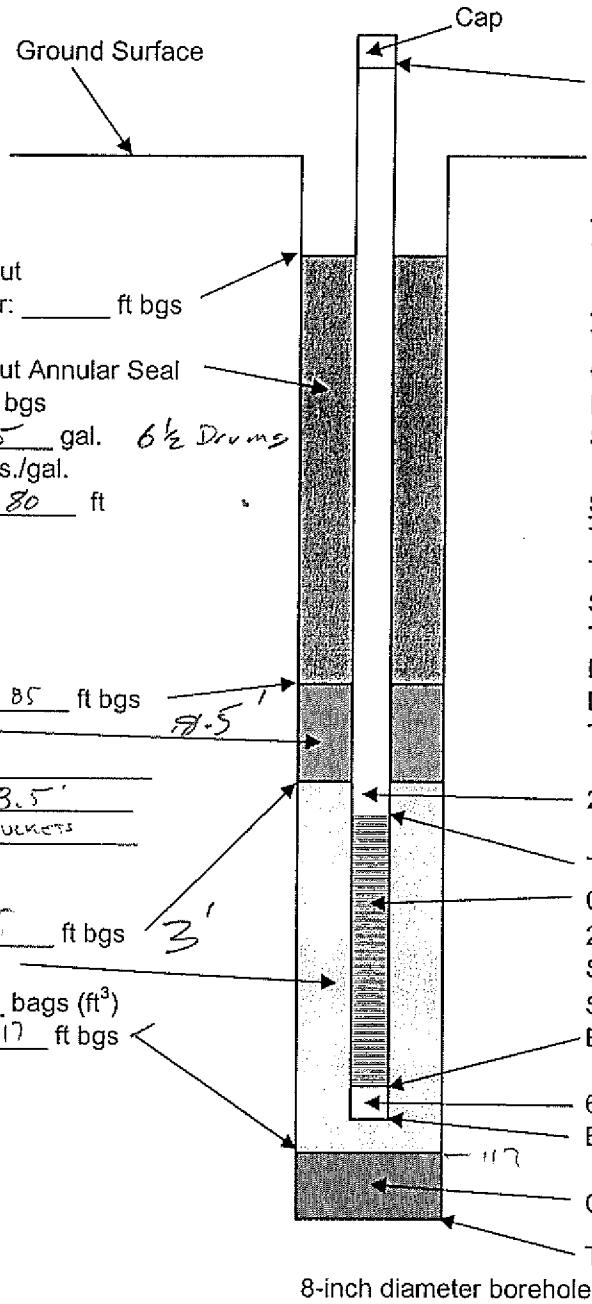

Cement/Bentonite Grout
Top of grout after 24 hr: _____ ft bgs

Cement/Bentonite Grout Annular Seal
Filled to 1 ft bgs
Volume Placed 325 gal. 6½ Drums
Density 15 lbs./gal.
Tremie Pipe Length 80 ft

Top of bentonite seal 85 ft bgs
Bentonite Seal 8.5'
Type 3/8" TR-30
Thickness (5 ft min) 8.5'
Volume Placed: 4 Buckets

Top of filter pack 93.5 ft bgs 3'
No.3 Sand Filter Pack
Volume Placed 6.5 bags (ft^3)
Bottom of filter pack 117 ft bgs

QA/QC: PRS
Date: 7/19/05

ELEVATION DATA

Stake Elevation	~51.5 @ PREVIOUS AW0013C
Datum Differential	—
Adjusted Stake Elevation	~51.5
Vertical Offset to Stake	—
Ground Elevation at Well	~51.5
Planned Screen Elevation	-45 to -65
Screen Interval (Depth)	96.5 to 116.5

SURGE/DEPTH RECORD

TD Inside Well Before Surging	120'
Top of Sand Before Surging	92.5
Surge Time	15 min 13:00-11'
Top of Sand After Surging	93.5
Distance Sand Dropped	1.0
DTW Inside Well After Surging	NM ~65
TD Inside Well After Surging	119'

2-inch diameter SCH-40 Blank casing

Top of screen 96.5 ft bgs
0.020 - inch Machine Sotted Screen
2-inch diameter, High Flow
SCH - 80 PVC
Screen Length 20 ft
Bottom of Screen 116.5 ft bgs

6-inch long Threaded End Cap
Bottom of Cap 117 ft bgs

Collapsed Native Material

Total Depth of Borehole 120 ft bgs
10:10 AM

COMMENTS

13:20 BENTONITE PELLETS BRIDGED @ 70'. PELLETS APPEAR MORE CRUMBLY THAN USUAL (¼" PELLETS)
BRIDGED W/ LESS THAN ONE BUCKET DROPPED, K NOCKING OUT BRIDGE WITH TREMIE PIPE.
15:00 TREMIE PELLETS INTO PLACE

HALEY & ALDRICH

WELL DESTRUCTION LOG

Well No. AW0013C (central well)

PROJECT	Boeing C-6 Facility	H&A FILE NO.	28882-506
LOCATION	1451 Knox Street, Torrance, California	PROJECT MGR.	S.P. Zachary
CLIENT	The Boeing Company	FIELD REP.	R. Ramzi
CONTRACTOR	WDC Exploration and Wells	REMOVAL DATE	7/13/2005 & 7/18/05

Well Designation	AW0013C
Well Diameter	2-inch PVC
Decommissioning Technique	Overdrill and fill-in down to 120 ft
Depth to Groundwater	67.20'
Total Depth of Well	117 feet below top of casing

	Cement (94 lb.Bags)	Additive (50 lb Bags)	Water (Gals.)	Final Quantity (cubic feet)
Type	Portland cement	Bentonite Hydro-gel		
Manufacturer	Paragon	CETCO		50
Quantity	3	1/4	40	50

Explanation of Well Decommissioning Techniques:
Well casing and screen was pressure grouted. Minimum volume of grout used was the volume of the well casing plus the volume of the sand pack surrounding the screen interval. Volume of sand pack was calculated assuming an average porosity of 0.3.
After pressure grouting, the upper 10 feet of the well casing was overdrilled and the borehole backfilled with one-sack sand and cement slurry.
NA minimum volume of grout required
NA volume of grout injected
NA % of the volume of screened material and sandpack void volume injected into the well.

Sketch:

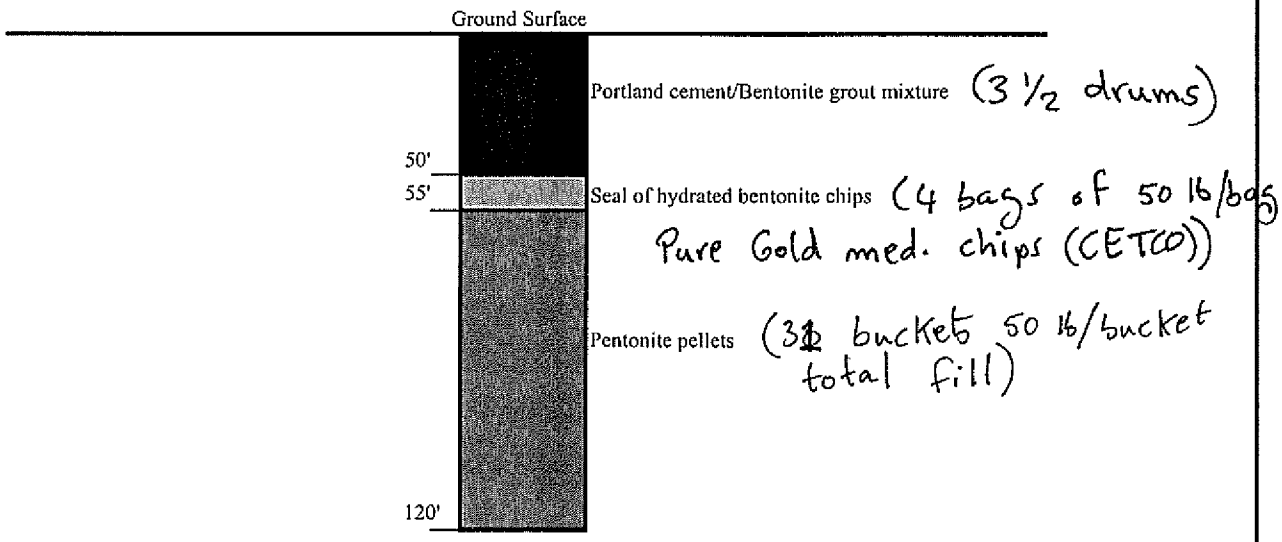

COMMENTS:
Day 1 Setup for well abandonment started @ 0915 @ 1730 bentonite pellet bridged inside the borehole @ a depth of 94' after adding ~12 50 lb buckets of pellets.
Day 2 Start @ 0830, overdrilled to 94', added 19 buckets of pellets, added 4 bags of bentonite chips. Job completed @ 1200 with adding 3 1/2 drums of grout mix.

7/19/05

Form # 3010

ATTACHMENT E

Tailgate Safety Meeting Reports, Site Access Logs,
and Records of Field Monitoring

Tailgate Safety Meeting Report

The Tailgate Safety Meeting is to supply Haley & Aldrich staff information regarding potential hazards that may be encountered at the site.

Observations of unsafe work practices/conditions that have developed since previous meeting:
PPE, CHEMICAL HAZARDS - TCE TRAFFIC SAFETY, FORKLIFT SAFETY
HOUSEKEEPING (TRASH, SOIL, WATER)

Location of (or changes in the location of) evacuation routes/safe refuge areas:
MEET @ TRAILER
ADDRESS 19503 S. NORMANDIE.

Additional Comments:

Attendees signatures below indicate that they have attended a briefing on the requirements of the Haley & Aldrich, Inc. Health & Safety Plan for the on-site work tasks, and declare that they understand the provisions and procedures set forth herein while working on this site.

	Name (printed)	Signature	Company
W 6/1/05	RUBEN LOPEZ		W.D.C
	Miguel Alvarado		W.D.C
	Rey MATA		W.D.C
	John IWANSKY		Spectrum Geo.
	DENNIS CARLSON		BOEING.
	SCOTT EACHARY		H+A
Th 6/2/05	ALVARADO Miguel		W.D.C
	RUBEN LOPEZ		W.D.C
	JOSE LAZO		W.D.C
	DENNIS CARLSON		BOEING

Meeting conducted by: TRAVIS HAMMOND Title: ENGINEER

Signature: Time:

Site Access Log
Parcel C Groundwater Remediation Well Installation Program
Former Boeing C-6 Site
Los Angeles, California

DATE: W 6/1/05 TO **Page** 1 **of** 1

This Site Access Log is to be signed by all visitors to the Site.

Visitor signatures below indicate that they are aware that this is an active construction site and that they have been briefed by the Haley & Aldrich, Inc. Health & Safety Coordinator as the the potential risks and dangers associated with the Site. All visitors to work areas on the Site must wear hard hats, safety glasses, and steel-toed boots while visiting this Site.

	Name (printed)	Signature	Company/Time In and Out IN	OUT
W 6/1/05	TRAVIS HAMMOND H&A	[signature]	6:45	
	RUBEN LARES (WDC)	[signature]	6:45	
	Miguel Alvarado WDC	[signature]	6:45	
	REY MATA	[signature]	6:45	
	JOHN IWANSKY	[signature]	6:45	
	DENNIS CARLSON	Dennis Carlson	BOEING.	
	SCOTT ZACHARY	[signature]	9:30	
TH 6/2/05	Miguel Alvarado	[signature]	7:00	
	JOSE LAZO	[signature]	7:00	
	RUBEN LARES	[signature]	7:00 AM	
	DENNIS CARLSON	Dennis Carlson	BOEING	
	Steven Huston	[signature]	WDC	
F 6/3/05	Michael Butler	[signature]	WDC	
	Juan G Alvarez	[signature]	WDC	
	Jorge T Gutierrez	[signature]	WDC	
	REY MATA	[signature]	WDC	
	DENNIS CARLSON	Dennis Carlson	BOEING.	
	TRAVIS HAMMOND H&A	[signature]	7:00	
SA 6/4/05	Edmund O'Dwyer	[signature]	6:00	
	Michael Rocha	Michael Rocha	6:00	
	Michael Butler	[signature]	6:00	
	Steven Huston	Steven Huston	6:00	
	Jose Bolonas	[signature]	6:00	
	R. Ramzi	[signature]	6:00	
	Jorge Solis	[signature]	6:00	
	Ignacio Gutierrez	Ignacio Gutierrez	6:00	
	DENNIS CARLSON	Dennis Carlson	8:15	

Tailgate Safety Meeting Report

The Tailgate Safety Meeting is to supply Haley & Aldrich staff information regarding potential hazards that may be encountered at the site.

Observations of unsafe work practices/conditions that have developed since previous meeting:
NONE.
DISCUSS CLIMBING THE MAST, BOOM DOWN WHENEVER POSSIBLE

Location of (or changes in the location of) evacuation routes/safe refuge areas:
SITE ADDRESS : 19503 S. NORMANDIE
MEETING LOCATION AT LOT 8 TRAILER IF WE EVACUATE THE DRILLING AREA

Additional Comments: PPE REQUIREMENTS, CHEMICAL HAZARDS : TCE, TRAFFIC SAFETY, EXCLUSION ZONES, FORKLIFT SAFETY, HOUSEKEEPING - CLEAN UP, SEPARATE SOIL, WATER, TRASH, WELL CONSTRUCTION - COUNT ALL BAGS, MEASURE TOP AND BOTTOM OF BH, SAND, SEAL

Attendees signatures below indicate that they have attended a briefing on the requirements of the Haley & Aldrich, Inc. Health & Safety Plan for the on-site work tasks, and declare that they understand the provisions and procedures set forth herein while working on this site.

	Name (printed)	Signature	Company
F 6/3/05	Steven Huston	Steven Huston	WDC
	Michael Butler	[illegible]	WDC
	Juan G Alvarez	[illegible]	WDC
	Jorge C Gutierrez	[illegible]	WDC
	Rey MATA	Rey Mata	WDC
	DENNIS CARLSON	Dennis Carlson	BOEING
	Edmund O'Dwyer	[illegible]	W.D.C
SA 6/4/05	Michael Rocha	Michael Rocha	WDC
	Michael Butler	[illegible]	W.D.C
	Steven Huston	Steven Huston	WDC
	Jose [illegible]	Jose Bolanos	WDC
	R. Ramzi	Ramzi D. Al	H&A
	Jorge Solis	[illegible]	WDC
	Ignacio Gutierrez	Ignacio Gutierrez	WDC
	Dennis Carlson	Dennis Carlson	BOEING.

Meeting conducted by: TRAVIS HAMMOND Title: ENGINEER

Signature: [signature] Time:

Tailgate Safety Meeting Report

The Tailgate Safety Meeting is to supply Haley & Aldrich staff information regarding potential hazards that may be encountered at the site.

Observations of unsafe work practices/conditions that have developed since previous meeting:
NONE.
CHANGE OUT MAIN LINE / HOISTS ON CME-95 (STEVE). INSPECT ALL RIGS
REVIEW 40 HR CERTS

Location of (or changes in the location of) evacuation routes/safe refuge areas:
SITE ADDRESS: 1451 KNOX ST
EMERGENCY MEETING LOCATION - OUTSIDE GATE @ 1451
HOSPITAL MAP / EMERGENCY CONTACTS ON TRAVIS' DASH

Additional Comments: PPE REQUIRED (HARD HATS, SAFETY GLASSES, TRAFFIC VEST, PANTS, STEEL TOES) GLOVES WHEN CONTACTING SOIL & GW, CHEMICAL HAZARDS: TCE, ALSO TOLUENE, MEK, TRAFFIC SAFETY, EXCLUSION ZONES & RIG SPACING, FORKLIFT SAFETY, HOUSEKEEPING - CLEANUP STANDARDS, SEPARATE SOIL/TRASH/WATER, NO SMOKING IN THE EXCLUSION ZONE, BACKUP SPOTTER ASK WHERE TO PUT SOIL - BINS 2/3 FULL = FULL, TODAY STORE SOIL IN HOPPERS TILL BIN ARRIVES

Attendees signatures below indicate that they have attended a briefing on the requirements of the Haley & Aldrich, Inc. Health & Safety Plan for the on-site work tasks, and declare that they understand the provisions and procedures set forth herein while working on this site.

40 HR VERIFIED	Name (printed)	Signature	Company
✓	TRAVIS HAMMOND	[signature]	HALEY & ALDRICH
12/10/05	Jorge A. Alvarez	[signature]	WDC
12/3/05	Michael Butler	[signature]	W.D.C
☐	Rex MATA	[signature]	WDC
☐	Ernie Leon	[signature]	WDC
☐	Glenn Androsko	[signature]	H&A
☐	Ramzi Ramzi	[signature]	H&A
✓	Paul Soncz	[signature]	H&A
12/3/05	Jorge I Cortemar	[signature]	W.D.C
☐	Jorge Solis	[signature]	WDC
☐	JOSE LAZO	[signature]	WDC
12/3/05	Steven Huston	[signature]	WDC
12/3/05	Ignacio Gutierrez	[signature]	WDC
☐	Quintin Hoeppner	[signature]	WDC
☐	RUBEN LARES	[signature]	WDC
☐	Miguel Alvarado	[signature]	

Meeting conducted by: TRAVIS HAMMOND Title: M 6/6/05

Signature: [signature] Time:

☐ PAUL ALMANZA
☐ ED O'DWYER

Site Access Log
Parcel C Groundwater Remediation Well Installation Program
Former Boeing C-6 Site
Los Angeles, California

DATE: SEE BELOW **Page** 1 **of** _____

This Site Access Log is to be signed by all visitors to the Site.

Visitor signatures below indicate that they are aware that this is an active construction site and that they have been briefed by the Haley & Aldrich, Inc. Health & Safety Coordinator as the the potential risks and dangers associated with the Site. All visitors to work areas on the Site must wear hard hats, safety glasses, and steel-toed boots while visiting this Site.

Name (printed)	Company	Signature	Company/Time In and Out IN	OUT
M6/6/05				
TRAVIS HAMMOND	H&A		630	
Juan G Alvarez	WDC		7:00	
Michael Butler	WDC		7:00	
Rey MATTA	WDC		7:00	
Ernie Leon	WDC		7:00	
Glenn Androsko	H+A		7:00	
Ramzi Ramzi	H&A		7:00	
Paul Soneg	H+A		7:00	
Jorge E Gutierrez	WDC		7:0	
RUBEN LARES	WDC		7:00	
Miguel Alvarado	WDC		7:00	
Jorge Solis	WDC		7:00	
Jose LARO	WDC		7:00	
Steven Huston	WDC		7:00	
Quintin Hoeppner	WDC		7:00	
Ignacio GUTIERREZ	WDC		7:00	
DENNIS			700	1045

HALEY & ALDRICH

RECORD OF FIELD MONITORING

PROJECT	Boeing C-6	H&A FILE NO.	28882-506
LOCATION	19503 ~~Knox St.~~ Normandie, LA, CA	PROJECT MGR.	S. Zachary
CLIENT	Boeing	FIELD REP	R. Ramzi
CONTRACTOR	WDC Exploration wells	DATE	6/6/05

Project Description: Bioremediation System Install

Task Description: Well Installation (MWC023)

Instrument Type: 1) PID MiniRae 2000 Serial Number: 7633

(OVA, LEL, PID, etc) 2) Serial Number:

Calibration and/or operational check completed as per manufacturers instructions: ☑ Yes ☐ No

Time completed: 0730

Weather conditions: Sunny

Reading Type:(1)	Level: (ppm or indicate units)	Time:	PPE Level:(2)
BZ/S	0.0/0.0	1500 Depth=15'	D
"	0.0/35.1	1540 Depth=70'	D

1. Key to Reading Types:
   Breathing Zone-BZ
   Perimeter-P
   Surface-S

2. EPA Levels B, C or D

Comments:

The following information should be maintained for all projects requiring air monitoring.

HALEY & ALDRICH

RECORD OF FIELD MONITORING

PROJECT	Boeing C-6	H&A FILE NO.	
LOCATION	Torrance, CA	PROJECT MGR.	P. Somes
CLIENT	Boeing/BRC	FIELD REP	G. Androsko
CONTRACTOR	WDC	DATE	6-6-05

Project Description: well installation

Task Description:

Instrument Type: 1) PID - mini RAE Serial Number: 4045
(OVA, LEL, PID, etc) 2) Serial Number:

Calibration and/or operational check completed as per manufacturers instructions: ☒ Yes ☐ No

Time completed: 0730

Weather conditions: Sunny, Clear 3-5mph NE

Reading Type:(1)	Level: (ppm or indicate units)	Time:	PPE Level:(2)
BZ	0.7	1240	C
BZ	0.0	1258	C
BS	0.0	1556	C
S	0.0	1557	C

1. Key to Reading Types:
   Breathing Zone-BZ
   Perimeter-P
   Surface-S

2. EPA Levels B, C or D

Comments:

The following information should be maintained for all projects requiring air monitoring.

HALEY & ALDRICH

RECORD OF FIELD MONITORING

PROJECT	PARCEL A MW'S	H&A FILE NO.	28882-506
LOCATION	C6	PROJECT MGR.	SCOTT ZACHARY
CLIENT	BOEING	FIELD REP	T. HAMMOND
CONTRACTOR	WDC	DATE	M 6/6/05

Project Description: BIOREMEDIATION INSTALL

Task Description: WELL INSTALLATION

Instrument Type: 1) MINIRAE 2000 PID Serial Number: 4049
(OVA, LEL, PID, etc) 2) Serial Number:

Calibration and/or operational check completed as per manufacturers instructions: ☒ Yes ☐ No

Time completed: 7:15 AM 6/6/05

Weather conditions: PARTLY CLOUDY & BREEZY

Reading Type:(1)	Level: (ppm or indicate units)	Time:		PPE Level:(2)
MWC022 BZ/3"	0.0/0.0	6/6 13:50	50'	D
BZ/3"	0.0/0.0	14:10	65'	D
BZ/3"	0.0/UP TO 15 PPM	1450	80	D
	0.0/UP TO 8.4	1500	85	D
END OF DAY CAL CHECK W/ 100 PPM ISO → 100 = OK				
6/8/05 CAL CHECK 845 AM → 97 PPM = OK				
AW0076UB MACHO BZ/3"	0.0/UP TO 26	6/8/05 850	50'	D
AW0075UB RUBY BZ/3"	0.0/0.0	920	50'	D
AW0076UB MACHO BZ/3"	0.0/UP TO 15	925	75	D
AW0074UB RUBY BZ/3"	0.0/0.0	14:10	10'	D
AW0067UB MACHO BZ/3"	0.0/0.0	14:15	40'	D
6/9/05 CALIBRATE W/ 100 ISO CAL CHECK → 97.0 PPM = OK				
AW0073C MIGUEL BZ/3"	0.0/UP TO 35	6/9/05 745	80'	D
AW0067UB MACHO BZ/3"	1.4/UP TO 15	800	75'	D
AW0073C MIGUEL BZ/3"	0.5/8.0	805	110	D
AW0046B RUBEN BZ/3"	0.0/0.0	9:45	20	D
AW0046B RUBEN BZ/3"	0.0/5.1	10:00	60'	D
AW0056UB PAUL BZ/3"	0.0/0.0	1050	35'	D

1. Key to Reading Types:
   Breathing Zone-BZ
   Perimeter-P
   Surface-S

2. EPA Levels B, C or D

Comments:

The following information should be maintained for all projects requiring air monitoring.

Tailgate Safety Meeting Report

The Tailgate Safety Meeting is to supply Haley & Aldrich staff information regarding potential hazards that may be encountered at the site.

Observations of unsafe work practices/conditions that have developed since previous meeting:

NONE

INSPECT CABLES

Location of (or changes in the location of) evacuation routes/safe refuge areas:

SITE ADDRESS : 1451 KNOX ST

EMERGENCY MEETING LOCATION - OUTSIDE GATE @ 1451

HOSPITAL MAP / EMERGENCY CONTACTS ON CONTACT DEPTH

Additional Comments: PPE REQUIRED, CHEMICAL HAZARDS - TCE, TOLUENE, MEK, TRAFFIC SAFETY, EXCLUSION ZONES / RIG SPACING, FORKLIFT SAFETY, BACKUP SPOTTERS, HOUSEKEEPING - SOIL / TRASH / WATER, NO SMOKING IN EXCLUSION ZONES

Attendees signatures below indicate that they have attended a briefing on the requirements of the Haley & Aldrich, Inc. Health & Safety Plan for the on-site work tasks, and declare that they understand the provisions and procedures set forth herein while working on this site.

Name (printed)	Signature	Company
Edmund O'Dwyer	[signature]	W.D.C.
Quintin Hoeppner	[signature]	W.D.C.
Paul Alvarez	[signature]	W.D.C.
Michael Butler	[signature]	W.D.C.
RUBEN LARES	[signature]	W.D.C.
Miguel Alvarado	[signature]	W.D.C.
Jorge E Gutierrez	[signature]	W.D.C.
Ray MATA	[signature]	W.D.C.
Jorge Solis	[signature]	WDC
Juan G Alvarez	[signature]	WDC
Ernie Leon	[signature]	WDC
Ignacio Gutierrez	[signature]	WDC
Glenn Androsko	[signature]	H+A
DENNIS CARLSON	[signature]	BOEING

Meeting conducted by: TRAVIS Hammons Title: ENGINEER

Signature: [signature] Date/Time: TU 6/7/05

HALEY & ALDRICH

RECORD OF FIELD MONITORING

PROJECT	Boeing C-6	H&A FILE NO.	
LOCATION	LA	PROJECT MGR.	P. Sonu
CLIENT	BRC/Boeing	FIELD REP	G. Andrusco
CONTRACTOR	WDC	DATE	6-7-05

Project Description:

Task Description:

Instrument Type: 1) MiniRAE PID — Serial Number: 4045

(OVA, LEL, PID, etc) 2) — Serial Number:

Calibration and/or operational check completed as per manufacturers instructions: ☒ Yes ☐ No

Time completed: 0715

Weather conditions: Sunny

Reading Type:(1)	Level: (ppm or indicate units)	Time:	PPE Level:(2)
BZ (AW134)	0	0755	C
BZ (AW131)	0.2	0800	C
BZ (AW134)	0.4	0825	C
BZ (AW131)	0	0826	C
BZ (AW134)	0	0850	C
BZ (AW131)	0	0851	C
BZ (AW134)	0	0930	C
S (AW134)	0.5	0931	C
BZ (AW131)	0	0932	C
BZ (AW130)	0	1300	C
BZ (AW130)	0	1318	C
BZ (AW130)	0	1335	
BZ (AW132)	0	1336	
BZ (AW132)	0	1416	
BZ (AW130)	0	1417	

1. Key to Reading Types:
   Breathing Zone-BZ
   Perimeter-P
   Surface-S

2. EPA Levels B, C or D

Comments:

The following information should be maintained for all projects requiring air monitoring.

Tailgate Safety Meeting Report

858 549.4511 SAT 1015

The Tailgate Safety Meeting is to supply Haley & Aldrich staff information regarding potential hazards that may be encountered at the site.

Observations of unsafe work practices/conditions that have developed since previous meeting: _____

NONE.

Location of (or changes in the location of) evacuation routes/safe refuge areas: _____

SITE ADDRESS : 1451 KNOX ST

EMERGENCY MEETING LOCATION - OUTSIDE GATE @ 1451

HOSPITAL MAP / EMERGENCY CONTACTS ON DASH

Additional Comments: PPE REQUIRED, CHEMICAL HAZARDS - TCE, TOLUENE, MEK, TRAFFIC SAFETY, EXCLUSION ZONES / RIG SPACING, FORKLIFT SAFETY, BACKUP SPOTTERS, HOUSEKEEPING - SOIL / TRASH / WATER, NO SMOKING IN EXCLUSION ZONES

Attendees signatures below indicate that they have attended a briefing on the requirements of the Haley & Aldrich, Inc. Health & Safety Plan for the on-site work tasks, and declare that they understand the provisions and procedures set forth herein while working on this site.

Name (printed)	Signature	Company
Ignacio Gutierrez	Ignacio Gutierrez	WDC
Miguel Alvarado	[illegible]	W.D.C
Pablo Alvarado	[illegible]	W.D.C
Ruben S. Lopez	[illegible]	W.D.C
Jorge Solis	[illegible]	WDC
Fernando Alvarado	Fernando Alvarado	W.D.C
Eric Leon	Eric Leon	WDC
Jesus G. Alvarez	[illegible]	WDC
[illegible]	[illegible]	W.D.C
Edmund O'Sullivan	Edmund O'Sullivan	W.D.C
Quintin Hoeppner	Quintin Hoeppner	W.D.C
Glenn Androsko	Glenn Androsko	H+A

Meeting conducted by: TRAVIS HAMMONS Title: ENGINEER

Signature: [illegible] Date/Time: 6/8/05

HALEY & ALDRICH

RECORD OF FIELD MONITORING

PROJECT	Boeing C-6	H&A FILE NO.	
LOCATION	LA	PROJECT MGR.	P. Senes
CLIENT	Boeing/BRC	FIELD REP	G. Androsko
CONTRACTOR		DATE	6-8-05

Project Description:

Task Description:

Instrument Type: 1) Mini RAE PIP — Serial Number: 4045
(OVA, LEL, PID, etc) 2) — Serial Number:

Calibration and/or operational check completed as per manufacturers instructions: ☒ Yes ☐ No

Time completed: 6-8-05 0715

Weather conditions: Sunny, 75

Reading Type:(1)	Level: (ppm or indicate units)	Time:	PPE Level:(2)
BZ (AW130B)	0	0750	C
BZ (AW132B)	0	0751	C
BZ (AW130B)	0.2	0815	C
BZ (AW129UB)	0	1015	C
BZ (AW129UB)	0.3	1035	C
BZ (AW129UB)	0	1055	C
BZ (AW0084C)	0	1355	C
BZ (")	0	1405	C
BZ (")	0	1415	C
BZ (AW0073C)	0	1416	C
BZ (")	0	1428	C
BZ (AW0084C)	0	1429	C
BZ (")	0	1453	C
BZ (AW0073C)	0	1454	C

1. Key to Reading Types:
   Breathing Zone-BZ
   Perimeter-P
   Surface-S

2. EPA Levels B, C or D

Comments:

The following information should be maintained for all projects requiring air monitoring.

Tailgate Safety Meeting Report

The Tailgate Safety Meeting is to supply Haley & Aldrich staff information regarding potential hazards that may be encountered at the site.

Observations of unsafe work practices/conditions that have developed since previous meeting: _____

Location of (or changes in the location of) evacuation routes/safe refuge areas: _____

SITE ADDRESS : 1451 KNOX ST
EMERGENCY MEETING LOCATION - OUTSIDE GATE @ 1451
HOSPITAL MAP / EMERGENCY CONTACTS ON DASH

Additional Comments: PPE REQUIRED, CHEMICAL HAZARDS - TCE, TOLUENE, MEK, TRAFFIC SAFETY, EXCLUSION ZONES / RIG SPACING, FORKLIFT SAFETY, BACKUP SPOTTERS, HOUSEKEEPING - SOIL / TRASH / WATER, NO SMOKING IN EXCLUSION ZONES

Attendees signatures below indicate that they have attended a briefing on the requirements of the Haley & Aldrich, Inc. Health & Safety Plan for the on-site work tasks, and declare that they understand the provisions and procedures set forth herein while working on this site.

Name (printed)	Signature	Company
R Ramzi		H&A
RUBEN LARES		W.D.C
Fernando Arredondo		W.D.C
Ernie Leon		WDC
Jorge Solis		WDC
Miguel Alvarado		W.D.C
Ignacio Gutierrez		W.D.C
JAVIER RIOS		W.D.C.
[illegible]		WDC
Edmund O'Dwyer		W.D.C
[illegible]		W.D.C
Jason Pottroff		W.D.C
William Thomas		WDC
Glenn Andrasko		H&A
DENNIS CARLSON		BOEING

Meeting conducted by: TRAVIS HAMMOND Title: ENGINEER

Signature: _____ Date/Time: Th 6/9/05

Tailgate Safety Meeting Report

The Tailgate Safety Meeting is to supply Haley & Aldrich staff information regarding potential hazards that may be encountered at the site.

Observations of unsafe work practices/conditions that have developed since previous meeting: _____
NONE

Location of (or changes in the location of) evacuation routes/safe refuge areas: _____
SITE ADDRESS : 1451 KNOX ST
EMERGENCY MEETING LOCATION - OUTSIDE GATE @ 1451
HOSPITAL MAP / EMERGENCY CONTACTS ON DASH

Additional Comments: PPE REQUIRED, CHEMICAL HAZARDS - TCE, TOLUENE, MEK, TRAFFIC SAFETY, EXCLUSION ZONES / RIG SPACING, FORKLIFT SAFETY, BACKUP SPOTTERS, HOUSEKEEPING - SOIL / TRASH / WATER, NO SMOKING IN EXCLUSION ZONES
EXCLUSION ZONES @ HAUL ROAD

Attendees signatures below indicate that they have attended a briefing on the requirements of the Haley & Aldrich, Inc. Health & Safety Plan for the on-site work tasks, and declare that they understand the provisions and procedures set forth herein while working on this site.

Name (printed)	Signature	Company
T. Nichols	[illegible]	WDC
Dale Smith	[illegible]	WDC
[illegible]	[illegible]	WDC
D Berry	[illegible]	WDC
Jason Pfaffroff	[illegible]	WDC
Quintin Hoeppner	[illegible]	WDC
R. Ramzi	[illegible]	H&A
Dennis Carlson	[illegible]	Boeing

Meeting conducted by: TRAVIS HAMMOND Title: ENGINEER

Signature: [illegible] Date/Time: [redacted] TU 6/14/05

HALEY & ALDRICH

RECORD OF FIELD MONITORING

PROJECT	PHASE 4 AWS	H&A FILE NO.	28882-506
LOCATION	C6 1451 KNOX ST LOS ANGELES	PROJECT MGR.	S. ZACHARY
CLIENT	BOEING	FIELD REP	THAMMOND
CONTRACTOR	WDC	DATE	TU 6/14/05

Project Description: BIOAMENDMENT SYSTEM INSTALLATION

Task Description: WELL INSTALL

Instrument Type: (OVA, LEL, PID, etc)
1) MINIRAE 2000 — Serial Number: 4049
2) & MINIRAE PLUS CLASSIC — Serial Number: 104011

Calibration and/or operational check completed as per manufacturers instructions: ☑ Yes ☐ No

Time completed: TU 6/14/05 840 CAL CHECK → 101

Weather conditions: LOW CLOUDS & CALM WIND 65°

Reading Type:(1)	Level: (ppm or indicate units)	Time:	DEPTH	PPE Level:(2)
TED AW0066UB BZ/3"	0.0 / 0.0	830	15'	D
PAUL AW0055C BZ/3"	0.0 / 0.0	835	25'	D
" " "	0.0 / UPTO 13	8:50	60'	D
TED AW0066UB BZ/3"	0.0 / UPTO 16	855	40'	D
TED AW0105C BZ/3"	0.0 / 0.0	1450	50'	D
W 6/15/05 915 CALIBRATE W/ 100 PPM ISO.		CAL CHECK → 102		= OK
PAUL AW0085C BZ/3"	0.0 / 0.0	6/15/05 9:25	55'	D
"	0.0 / 0.4	" 9:40	70'	D
"	0.0 / 1.3	↓ 9:50	80'	D
Th 6/16/05 900 CALIBRATE MINIRAE PLUS CLASSIC PID (EQUIPCO - MINIRAE .31 / 104011) W/100 PPM ISO				
CAL CHECK → 101 PPM = OK				
MIGUEL AW0085UB BZ/3"	0.0 / 4.3	6/16/05 9:05	85'	D
PAUL AW0085C "	0.0 / 0.0	↓ 9:10	105'	D
JORGE AW0063C "	0.0 / 0.2	↓ 1250	75'	D
PAUL AW0055C "	0.0 / 0.0	↓ 1445	45	D - NO CUTTINGS YET
PAUL " "	0.0 / 0.3	↓ 15:25	90	D
" " "	0.0 / 14	↓ 15:45	115	D
END OF DAY CAL CHECK W/ 100 PPM ISO → 96.8 PPM = OK				

1. Key to Reading Types:
   - Breathing Zone-BZ
   - Perimeter-P
   - Surface-S
2. EPA Levels B, C or D

Comments:

The following information should be maintained for all projects requiring air monitoring.

Tailgate Safety Meeting Report

The Tailgate Safety Meeting is to supply Haley & Aldrich staff information regarding potential hazards that may be encountered at the site.

Observations of unsafe work practices/conditions that have developed since previous meeting:
DISCUSS DUST
EXCLUSION ZONE @ HAUL ROAD, DO NOT BLOCK THE ROAD.
MONITOR TCE

Location of (or changes in the location of) evacuation routes/safe refuge areas:
SITE ADDRESS : 1451 KNOX ST
EMERGENCY MEETING LOCATION - OUTSIDE GATE @ 1451
HOSPITAL MAP / EMERGENCY CONTACTS ON DASH

Additional Comments: PPE REQUIRED, CHEMICAL HAZARDS - TCE, TOLUENE, MEK, TRAFFIC SAFETY, EXCLUSION ZONES / RIG SPACING, FORKLIFT SAFETY, BACKUP SPOTTERS, HOUSEKEEPING - SOIL / TRAS / WATER, NO SMOKING IN EXCLUSION ZONES

Attendees signatures below indicate that they have attended a briefing on the requirements of the Haley & Aldrich, Inc. Health & Safety Plan for the on-site work tasks, and declare that they understand the provisions and procedures set forth herein while working on this site.

Name (printed)	Signature	Company
Quintin Hoeppner	Quintin Hoeppner	W.D.C.
Paul Almanza	[illegible]	W.D.C
D Bandy	[illegible]	WDC
T Nichols	[illegible]	WDC
Miguel Alvarado	[illegible]	W.D.C
Jason Pottroff	Jason Pottroff	W.D.C
Glenn Androsko	Glenn Androsko	H+A
R. Ramzi	[illegible]	H&A
JOSE LAZO	[illegible]	WDC
DENNIS CARLSON	Dennis Carlson	BOE MG.
JORGE E GUTIERREZ	[illegible]	W.D.C.
REY MATA	Rey Mata	W.DC

Meeting conducted by: TRAVIS HAMMOND Title: ENGINEER

Signature: [signature] Date/Time: W 6/15/05

HALEY & ALDRICH

RECORD OF FIELD MONITORING

PROJECT	Boeing C-6	H&A FILE NO.	28882-506
LOCATION	LA	PROJECT MGR.	P. Sano
CLIENT	Boeing/BRC	FIELD REP	B. Andrasko
CONTRACTOR	WDC	DATE	6-15-06

Project Description: Ammendment well installation

Task Description:

Instrument Type: 1) Mini RAE, PID — Serial Number: 4045

(OVA, LEL, PID, etc) 2) — Serial Number:

Calibration and/or operational check completed as per manufacturers instructions: ☒ Yes ☐ No

Time completed: 0730

Weather conditions: AM Cloudy 70° / PM Sunny 78° 3-5 MPH NW

Reading Type:(1)	Level: (ppm or indicate units)	Time:	PPE Level:(2)
BZ (AW 105C)	0.0	0835	C
"	0.0	0845	C
"	0.0	0920	C
"	0.0	0935	C
"	0.8	0954	C
"	0	1009	C
"	0.1	1245	C
"	0.2	1314	C
BZ (AW0096UB)	0.2	1315	C
"	0.1	1328	C
"	0.2	1335	C
BZ (AW0094C)	0.3	1430	C
"	0.2	1445	C
BZ (AW0096UB)	0.2	1447	C
"	0.2	1501	C
BZ AW0094C	0.2	1503	C
"	0.1	1519	C
"	0.1	1540	C
(AW0096UB)	0.1	1541	C

1. Key to Reading Types:
   - Breathing Zone-BZ
   - Perimeter-P
   - Surface-S

2. EPA Levels B, C or D

Comments:

The following information should be maintained for all projects requiring air monitoring.

Tailgate Safety Meeting Report

The Tailgate Safety Meeting is to supply Haley & Aldrich staff information regarding potential hazards that may be encountered at the site.

Observations of unsafe work practices/conditions that have developed since previous meeting: Climbing on rigs

Location of (or changes in the location of) evacuation routes/safe refuge areas: None

Additional Comments: Caution tape along work areas, inner gloves, truck traffic

Attendees signatures below indicate that they have attended a briefing on the requirements of the Haley & Aldrich, Inc. Health & Safety Plan for the on-site work tasks, and declare that they understand the provisions and procedures set forth herein while working on this site.

Name (printed)	Signature	Company
Miguel Alvarado	[signature]	W.D.C
Quintin Hoppner	Quintin Hoppner	W.D.C.
R. Ramzi	[signature]	H&A
Paul Almanza	[signature]	WDC
Dale Smith	[signature]	WDC
Jason Pottroff	[signature]	WDC
T. Nichols	[signature]	WDC
D Bondy	[signature]	WDC
Jose Lago	[signature]	WDC
Michael Rocha	Michael Rocha	W.D.C
MAC Baker	MAC Baker	W.D.C
Jorge E Gutierrez	[signature]	WDC
Rey MATA	[signature]	W.DC
Travis Hammond	[signature]	H&A
Dennis Carlson	Dennis Carlson	BOEING

Meeting conducted by: Glenn Androsko Title: Field Rep

Signature: [signature] Time: 0700

HALEY & ALDRICH

RECORD OF FIELD MONITORING

PROJECT	Boeing C-6	H&A FILE NO.	28882-506
LOCATION	Torrance CA	PROJECT MGR.	P. Sones
CLIENT	Boeing /BRC	FIELD REP	G. Androske
CONTRACTOR	WDC	DATE	6-16-05

Project Description: Amendment Well Installation

Task Description:

Instrument Type: 1) Mini RAE/PID Serial Number: 4049

(OVA, LEL, PID, etc) 2) Serial Number:

Calibration and/or operational check completed as per manufacturers instructions: ☒ Yes ☐ No

Time completed: 0715 100ppm ISO

Weather conditions: Am/Cloudy 65°

Reading Type:(1)	Level: (ppm or indicate units)	Time:	PPE Level:(2)
BZ (AW0094C)	0.2	0804	C
(AW0065UB)	0.0	0820	C
"	0.2	0829	
"	0.0	0846	
(AW0094C)	0.3	0900	
(AW0065UB)	0.2	0902	
"	0.8	0920	
(AW0094C)	0.3	0921	
(AW0065UB	0.2	1000	
(AW0094C)	0.3	1025	
(AW0094C)	0.0	1215	
(AW0065UB	0.2	1218	
(AW0063C)	0.0	1220	
(AW0065UB)	0.0	1340	
(AW0054C)	0.0/depth 15'	1450	C
AW0054C BZ/3"	0.0/0.2 @ 55'	1525	C
" BZ/3"	0.0/1.5 @ 75'	1555	C
AW0065C BZ/3"	0.0/0.1 @ 85'	1610	C

1. Key to Reading Types:
   Breathing Zone-BZ
   Perimeter-P
   Surface-S

2. EPA Levels B, C or D

Comments:

The following information should be maintained for all projects requiring air monitoring.

Tailgate Safety Meeting Report

The Tailgate Safety Meeting is to supply Haley & Aldrich staff information regarding potential hazards that may be encountered at the site.

Observations of unsafe work practices/conditions that have developed since previous meeting: _____

Location of (or changes in the location of) evacuation routes/safe refuge areas: _____

SITE ADDRESS : 1451 KNOX ST

EMERGENCY MEETING LOCATION - OUTSIDE GATE @ 1451

HOSPITAL MAP / EMERGENCY CONTACTS ON DASH

Additional Comments: PPE REQUIRED, CHEMICAL HAZARDS - TCE, TOLUENE, MEK, TRAFFIC SAFETY, EXCLUSION ZONES / RIG SPACING, FORKLIFT SAFETY, BACKUP SPOTTERS, HOUSEKEEPING - SOIL / TRAS / WATER, NO SMOKING IN EXCLUSION ZONES

JOB ISSUES : TRASH BLOWING AROUND - IF YOU SEE GLOVES, WELL PLASTIC, CAUTION TAPE, PAPER TOWELS FROM PELLETS PICK IT UP AS WE GO. CLEAN UP EVERYTHING THAT LOOKS LIKE CUTTINGS. THIS IS WHAT THE CLIENT CAN SEE

DECON WATER DRUMS - EMPTY OUT MUD

Attendees signatures below indicate that they have attended a briefing on the requirements of the Haley & Aldrich, Inc. Health & Safety Plan for the on-site work tasks, and declare that they understand the provisions and procedures set forth herein while working on this site.

Name (printed)	Signature	Company
Paul Almanza	[signature]	WDC
JAVIER RIOS	[signature]	W.D.C.
D Bondy	[signature]	WDC
T. Nichols	[signature]	WDC
M. Alvarado	[signature]	W.D.C
Michael Rocha	Michael Rocha	
Glenn Androsko	[signature]	H+A
Quintin Hoeppner	[signature]	WDC.
Dale Smith	[signature]	WDC
Ignacio Gutierrez	Ignacio Gutierrez	WDC
JOSE LAZO	[signature]	WDC
MAC BAKER	MAC BAKER	W.D.C
Jorge Solis	[signature]	WDC
DENNIS CARLSON	Dennis Carlson	BOEING.

Meeting conducted by: TRAVIS HAMMOND Title: ENG.

Signature: [signature] Date/Time: F 6/17/05

HALEY & ALDRICH

RECORD OF FIELD MONITORING

PROJECT	PHASE 4 AWS	H&A FILE NO.	28882-506
LOCATION	C6 1451 KNOX ST	PROJECT MGR.	S. ZACHARY
CLIENT	BOEING	FIELD REP	T. HAMMOND
CONTRACTOR	WDC	DATE	F 6/17/05

Project Description: BIOAMMENDMENT SYSTEM

Task Description: WELL INSTALLATION

Instrument Type: 1) MINIRAE PLUS CLASSIC PID — Serial Number: EQUIPC0.31/104011

(OVA, LEL, PID, etc) 2) — Serial Number:

Calibration and/or operational check completed as per manufacturers instructions: ☒ Yes ☐ No

Time completed: F 6/17/05 7:45 CAL CHECK → 97 PPM OK

Weather conditions: LOW CLOUDS & CALM 60°

Reading Type:(1)	Level: (ppm or indicate units)	Time:	DEPTH	PPE Level:(2)
NACHO AW0062C BZ/3"	0.0 / 0.9	7:55	15'	D
"	0.0 / 1.7	820	40'	D
"	0.0 / 0.9	850	75'	D
"	0.0 / 0.3	920	95'	D
PAUL AW0051C BZ/3"	0.1 / 0.1	1025	30'	D
"	0.1 / 0.3	1045	70'	D
"	0.1 / 0.8	1100	100'	D
M 6/20/05 - CALIBRATION CHECK w/ 100 PPM ISO → 97.8				
RUBEN AW0086C BZ/3"	0.1 / 0.3	800	35'	D
"	0.1 / 1.7	810	60'	D
" BZ/3"/P	UP TO 10 PPM / ~30/0.1	830	100'	UPGRADE TO C
JAVIER AW0032C BZ/3"	0.1 / 0.1	830	25'	D
RUBEN AW0086C BZ/3"/P	UP TO 2.0 / UP TO 10/0.1	10:15	120'	C
"	0.2 / UP TO 5.0	10:30	SETTING UP	BACK TO D
JAVIER AW0032C BZ/3"/P	3.5 / 15 / 0.1	1030	80'	UPGRADE TO C
"	3.0 / 5.0 / 0.1	1045	90'	C
RUBEN AW0086C BZ/3"/P	0.5 / 1.9 / 0.1	1045	SETTING	D
JAVIER AW0032C BZ/3"/P	UP TO 3.5 / 10 / 0.1	1055	100	C
JAV "	0.5 / 5 / 0.1	12:05	120'	BACK TO D
RUBEN AW0086C BZ/3/P	1.0 / UP TO 5 / 0.1	12:20	WELL	D
JAVIER AW0032C BZ/3	0.6/5.4	13:20	WELL	D
RUBEN AW0023C BZ/3"	0.1/0.2	14:15	50'	D
" "	0.1/0.4	1430	60'	D
JAVIER AW0032C BZ/3"	0.1/0.8	1435	PULLING AUGERS	D
RUBEN AW0023C BZ/3/P	5.8/45/<1	1440	70'	C
" "	3.2/34/<1	1455	105'	C

1. Key to Reading Types:
   Breathing Zone-BZ
   Perimeter-P
   Surface-S
   3" = 3" FROM SOIL SURFACE
2. EPA Levels B, C or D

Comments:

END OF DAY CAL CHECK w/ 100 PPM ISO → 92.7 PPM = OK

The following information should be maintained for all projects requiring air monitoring.

41C 44C
43C
~~47~~C

HALEY & ALDRICH

RECORD OF FIELD MONITORING

PROJECT	Boeing C-6	H&A FILE NO.	28882-506
LOCATION	LA	PROJECT MGR.	P. Sones
CLIENT	Boeing / BRC	FIELD REP	G. Androsko
CONTRACTOR	WDC	DATE	6-17-05

Project Description:

Task Description: Ammendment Well Installation

Instrument Type: 1) Mini RAE / PID — Serial Number: 4045
(OVA, LEL, PID, etc) 2) — Serial Number:

Calibration and/or operational check completed as per manufacturers instructions: ☒ Yes ☐ No

Time completed: 0730

Weather conditions: Cloudy 70°

Reading Type:(1)	Level: (ppm or indicate units)	Time:	PPE Level:(2)
BZ (AW0054C)	0.0	0815	D
(AW0065C)	0.0	0816	
"	0.0	0857	
(AW0054C)	0.0	0858	
(AW0043C)	0.0	1034	
"	0.0	1045	
(AW0044C)	0.0	1047	
"	0.0	1057	
(AW0043C)	0.1	1058	
"	0.0	1105	
(AW0044C)	0.0	1106	
"	0.0	1111	
(AW0043C)	0.0	1112	
"	0.1	1124	
(AW0044C)	0.5	1125	

1. Key to Reading Types:
   Breathing Zone-BZ
   Perimeter-P
   Surface-S

2. EPA Levels B, C or D

Comments:

The following information should be maintained for all projects requiring air monitoring.

Tailgate Safety Meeting Report

The Tailgate Safety Meeting is to supply Haley & Aldrich staff information regarding potential hazards that may be encountered at the site.

Observations of unsafe work practices/conditions that have developed since previous meeting: _____

Location of (or changes in the location of) evacuation routes/safe refuge areas: _____

SITE ADDRESS : 1451 KNOX ST

EMERGENCY MEETING LOCATION - OUTSIDE GATE @ 1451

HOSPITAL MAP / EMERGENCY CONTACTS ON DASH

Additional Comments: PPE REQUIRED, CHEMICAL HAZARDS - TCE, TOLUENE, MEK, TRAFFIC SAFETY, EXCLUSION ZONES / RIG SPACING, FORKLIFT SAFETY, BACKUP SPOTTERS, HOUSEKEEPING - SOIL / TRAS / WATER, NO SMOKING IN EXCLUSION ZONES

Attendees signatures below indicate that they have attended a briefing on the requirements of the Haley & Aldrich, Inc. Health & Safety Plan for the on-site work tasks, and declare that they understand the provisions and procedures set forth herein while working on this site.

Name (printed)	Signature	Company
JAVIER RIOS	[signature]	W.D.C.
Jorge Solis	[signature]	WDC
Fernando Arredondo	[signature]	W.D.C
Ret MATA	[signature]	WDC
[illegible]	[signature]	WDC
Jorge E Gutierrez	[signature]	W.D.C
Miguel Alvarado	[signature]	W.D.C
Edmund O'Dwyer	[signature]	W.D.C
Dub Smith	[signature]	WDC
[illegible]	[signature]	WDC
Michael Rocha	Michael Rocha	W.D.C
Ruben S. Lares	[signature]	W.D.C
R. Ramzi	[signature]	H&A
Glenn Androsko	[signature]	H+A
DENNIS CARLSON	Dennis Carlson	BOEING.

Meeting conducted by: TRAVIS HAMMOND Title: ENGINEER

Signature: [signature] Date/Time: M 6/20/05

RECORD OF FIELD MONITORING

PROJECT	Boeing C-6	H&A FILE NO.	28882-506
LOCATION	LA	PROJECT MGR.	P. Sones
CLIENT	Boeing / BRG	FIELD REP	G. Andrasko
CONTRACTOR	WDR	DATE	6-20-05

Project Description: System install

Task Description: Well installation

Instrument Type: 1) Mini RAE / PID — Serial Number: 4045
(OVA, LEL, PID, etc) 2) — Serial Number:

Calibration and/or operational check completed as per manufacturers instructions: ☒ Yes ☐ No

Time completed: 0700 (100ppm Iso)

Weather conditions: Sunny

Reading Type:(1)	Level: (ppm or indicate units)	Time:	PPE Level:(2)
BZ (AW44C)	0.2	0750	D
"	1.6	0810	
(AW43C)	0.0	0820	
(AW53C)	0.1	0910	
(AW32C)	0.1	0914	
(AW53C)	0.2	0956	
(AW86C)	0.5	1003	C
(AW86C)	1.6	1008	C
(AW53C)	0.1	1016	D
(AW43C)	0.0	1017	D
(AW32C)	0.8	1018	D
(AW86C)	0.8	1020	C
(AW630B)	0.1	1300	D
(")	0.1	1325	D
(AW42C)	0.2	1514	D
(AW630B	0.0	1520	D
(AW42C)	0.0	1525	D
(AW42C)	0.2	1532	D
"	0.2	1545	D
(AW630B	0.0	1546	D

1. Key to Reading Types:
   Breathing Zone-BZ
   Perimeter-P
   Surface-S

2. EPA Levels B, C or D

Comments:

The following information should be maintained for all projects requiring air monitoring.

Tailgate Safety Meeting Report

The Tailgate Safety Meeting is to supply Haley & Aldrich staff information regarding potential hazards that may be encountered at the site.

Observations of unsafe work practices/conditions that have developed since previous meeting: _____

☑ VERIFY YOUR CERTS / RESPIRATOR FIT TESTS — ☐ FAX # FOR TRAILER

☑ FORKLIFTS - CERTIFIED OPERATORS ONLY, HOPPER INSPECTIONS,

☑ UTILITIES - OVERHEAD / BURIED ☐ TRENCHES ☐ BOBCAT OPERATOR

☑ FLAGGING ON BINS ☐ PIN FLAGS FOR UTILITIES ☐ FANS / GENERATORS IN OUR WORK AREAS

☐ HAND AUGERS

Location of (or changes in the location of) evacuation routes/safe refuge areas: _____

SITE ADDRESS : 1451 KNOX ST ↳ ? POTHOLE RG

EMERGENCY MEETING LOCATION - OUTSIDE GATE @ 1451

HOSPITAL MAP / EMERGENCY CONTACTS ON DASH

Additional Comments: PPE REQUIRED, CHEMICAL HAZARDS - TCE, TOLUENE, MEK, TRAFFIC SAFETY, EXCLUSION ZONES / RIG SPACING, FORKLIFT SAFETY, BACKUP SPOTTERS, HOUSEKEEPING - SOIL / TRASH / WATER, NO SMOKING IN EXCLUSION ZONES

☐ RESPIRATOR FIT TESTING / CARTRIDGES REQUIRED ☑ HOPPERS - STAND CLEAR, USE ROPE/BOARD TO DUMP

☑ UTILITY SAFETY - OVERHEAD & BURIED

Attendees signatures below indicate that they have attended a briefing on the requirements of the Haley & Aldrich, Inc. Health & Safety Plan for the on-site work tasks, and declare that they understand the provisions and procedures set forth herein while working on this site.

8 HR	RESP	Name (printed)	Signature	Company	2 YR Forklift
12/4/04	8/12/04	IGNACIO GUTIERREZ	Ignacio Gutierrez	W.D.C	12/6/03
5/23/05	5/23/05	RUBEN S. LARES	[illegible]	W.D.C	5/23/05
☑ 12/5/04	12/4/04	Edmund O'Dwyer	[illegible]	W.D.C	12/6/03
12/4/04	12/4/04	D. Bovey (DEREK)	[illegible]	WDC	12/4/04
12/4/04	12/4/04	Miguel Alvarado	[illegible]	W.D.C	12/4/04
9/28/04	12/4/04	T. NICHOLS (TED)	[illegible]	WDC	12/6/03
4/11/05	4/15/05	M. BAKER (MAC)	Mac Baker	WDC	☐
12/4/04	12/4/04	JAVIER RIOS	[illegible]	W.D.C.	12/6/03
4/10/05	3/14/05	Jorge Solis	[illegible]	WDC	4/10/05
5/18/05	5/21/04	Fernando Arredondo	[illegible]	W.D.C	☐
12/4/04	12/4/04	Juan G. Alvarez	[illegible]	WDC.	12/4/04
1/7/05	3/27/04	Dale Smith	[illegible]	WDC	12/20/04
		Glenn Androsko	Glenn Androsko	H+A	
		DENNIS CARLSON	Dennis Carlson	BOEING	

Meeting conducted by: TRAVIS HAMMOND Title: ENGINEER

Signature: [illegible] Date/Time: TU 6/21/05

OTHER CERTS			FORKLIFT
12/4/04	12/4/04	MIKE BUTLER	12/4/04
12/4/04	12/4/04	JORGE GUTIERREZ	12/6/03
12/4/04	12/4/04	QUINTIN HOEPPNER	12/6/03
12/4/04	12/4/04	PAUL ALMANZA	12/6/03
2/9/05	2/18/05	MIKE ROCHA	2/18/05
4/15/05	4/15/05	REG MATA	4/15/05

HALEY & ALDRICH

RECORD OF FIELD MONITORING

PROJECT	PHASE 4 AW's	H&A FILE NO.	29882-506
LOCATION	C6	PROJECT MGR.	S. ZACHARY
CLIENT	BOEING	FIELD REP	T. HAMMOND
CONTRACTOR	WDC	DATE	TU 6/21/05

Project Description: BIO INJECTION SYSTEM

Task Description: WELL INSTALLATION

Instrument Type: (OVA, LEL, PID, etc) 1) MINIRAE PLUS CLASSIC PID Serial Number: EQUIPCO 31/ 104001

2) Serial Number:

Calibration and/or operational check completed as per manufacturers instructions: ☒ Yes ☐ No

Time completed: TU 6/21/05 9:50 CAL CHECK → 94.0

Weather conditions: CLEAR & CALM 75°

Reading Type:(1)	Level: (ppm or indicate units)	Time:	DEPTH	PPE Level:(2)
RUBEN AW0010UB BZ/3"	0.1/0.3	955	45'	D
" "	0.1/0.4	1020	85	D
NACHO AW0023C "	0.1/0.8	1115	SETTING WELL	D
NACHO AW0027B BZ/3"	0.1/0.3	1315	50'	D
"	0.1/1.2	1340	75'	D
RUBEN AW0009UB BZ/3"	0.1/0.1	1345	20'	D
NACHO AW0027B BZ/3"	0.1/2.7	1350	~~85~~ 90'	D
"	0.1/10.8	1355	100'	D
RUBEN AW0009UB BZ/3"	0.1/0.3	1355	65'	D
TED AW0037C BZ/3"	0.1/UP TO 10	1740	85'	D
1750 END OF DAY	CAL CHECK → 96.1 PPM = OK			

1. Key to Reading Types:
   - Breathing Zone-BZ
   - Perimeter-P
   - Surface-S

2. EPA Levels B, C or D

Comments:

The following information should be maintained for all projects requiring air monitoring.

HALLY & ALDRICH

RECORD OF FIELD MONITORING

PROJECT	Boeing - C6	H&A FILE NO.	28882-506
LOCATION	LA	PROJECT MGR.	P. Smes
CLIENT	Boeing / BRC	FIELD REP	G. Androsko
CONTRACTOR	WDC	DATE	6-21-05

Project Description: Ammendment well installation

Task Description:

Instrument Type: (OVA, LEL, PID, etc) 1) mini RAE / PID Serial Number: 4045

2) Serial Number:

Calibration and/or operational check completed as per manufacturers instructions: ☒ Yes ☐ No

Time completed: 6-21-05 / 0745

Weather conditions: Sunny

Reading Type:(1)	Level: (ppm or indicate units)	Time:	PPE Level:(2)
BZ (AW 64UB)	0.0	0820	D
"	0.0	0835	D
(AW 42C)	0.2	0837	D
BZ/S "	0.0/0.2	0852	D
(AW 64UB)	0.0/0.0	0855	D
"	0.0/0.0	0905	D
(AW 42C)	0.0/1.7	0904	D
(AW 64UB)	0.0/0.0	1041	D
"	0.0/0.3	1107	D
(AW 42C)	0.0/0.0	1110	D
"	0.0/0.0	1234	D
(AW 55UB)	0.0/0.0	1305	D
(AW 42C)	0.0/0.0	1306	D
(AW 55UB)	0.0/0.0	1319	D
"	0.0/0.0	1337	D
"	0.0/0.0	1349	D
"	0.0/1.5	1420	D
(AW 42C)	0.0/1.1	1405	D
(AW 55UB	0.1/1.8	1613	
"	0.0/0.4	1627	

1. Key to Reading Types:
   Breathing Zone-BZ
   Perimeter-P
   Surface-S

2. EPA Levels B, C or D

Comments:

The following information should be maintained for all projects requiring air monitoring.

Tailgate Safety Meeting Report

The Tailgate Safety Meeting is to supply Haley & Aldrich staff information regarding potential hazards that may be encountered at the site.

Observations of unsafe work practices/conditions that have developed since previous meeting: House keeping

Location of (or changes in the location of) evacuation routes/safe refuge areas: None

Additional Comments: Contain soil cuttings, fire extinguishers, wear gloves,

Attendees signatures below indicate that they have attended a briefing on the requirements of the Haley & Aldrich, Inc. Health & Safety Plan for the on-site work tasks, and declare that they understand the provisions and procedures set forth herein while working on this site.

Name (printed)	Signature	Company
Ruben S. Lares	[illegible]	W.D.C
Miguel Alvarado	[illegible]	W.D.C
MAC B	Mac Baker	
Fernando Amedondo	[illegible]	W.D.C
Juan G Alvarez	[illegible]	WDC
O'Donoy	[illegible]	WDC
Dale Smith	[illegible]	WDC
Edmund O'Owyon	[illegible]	W.D.C
T. Nichols	[illegible]	WDC
DENNIS CARLSON	Dennis Carlson	BOEING
SCOTT [illegible]	[illegible]	HTA
Jorge E. [illegible]	[illegible]	W.D.C
Ray Mata	Ray Mata	W.D.C

Meeting conducted by: Glenn Androsko Title: Field Rep

Signature: Glenn Androsko Time: 0715 W 6/22/05

907 3093

HALEY & ALDRICH

RECORD OF FIELD MONITORING

PROJECT	Boeing C-6	H&A FILE NO.	28882-506
LOCATION	LA	PROJECT MGR.	P. Jones
CLIENT	Boeing / BRC	FIELD REP	G. Androsko
CONTRACTOR	WDC	DATE	6-22-05

Project Description: Ammendment well installation

Task Description:

Instrument Type: 1) MiniRAE PID — Serial Number: 40415
(OVA, LEL, PID, etc) 2) — Serial Number:

Calibration and/or operational check completed as per manufacturers instructions: ☒ Yes ☐ No

Time completed: 0715 100ppm Iso

Weather conditions: Sunny

Reading Type:(1)	Level: (ppm or indicate units)	Time:	PPE Level:(2)
BZ/S (AW45B)	0.0 / 0.5	0805	D
(AW37C)	0.2 / 1.5	0809	D
(AW45B)	0.0 / 0.2	0817	D
"	0.0 / 0.0	0826	D
(AW37C)	0.3 / 0.8	0829	D
"	0.0 / 0.2	0842	D
(AW45B)	0.0 / 1.4	0841	D
"	0.2 / 0.8	0856	D
(AW37C)	0.4 / 0.4	0857	D
(AW45B)	0.1 / 0.2	1032	D
(AW37C)	0.0 / 0.1	1050	D
"	0.0 / 0.4	1216	D
(AW45B)	0.0 / 3.9	1222	D
"	0.0 / 0.0	1303	D
(AW43B)	0.0 / 0.0	1400	D
(")	0.0 / 0.5	1439	D
(")	0.0 / 0.0	1617	D
(")	0.0 / 0.8	1629	D
(AW44B)	0.0 / 0.0	1635	D
(AW43B)	0.0 / 1.7	1647	D

1. Key to Reading Types:
   Breathing Zone-BZ
   Perimeter-P
   Surface-S

2. EPA Levels B, C or D

Comments:

The following information should be maintained for all projects requiring air monitoring.

HALEY & ALDRICH

RECORD OF FIELD MONITORING

PROJECT	PH4 AWs	H&A FILE NO.	28882-500
LOCATION	C6	PROJECT MGR.	S. ZACHARY
CLIENT	BOEING	FIELD REP	T. HAMMOND
CONTRACTOR	WDC	DATE	W 6/22/05

Project Description: BIO INJECTION SYSTEM

Task Description: WELL INSTALLATION

Instrument Type: 1) MINIRAE PLUS CLASSIC PID — Serial Number: EQUIPL0.31 / 104011

(OVA, LEL, PID, etc) 2) — Serial Number:

Calibration and/or operational check completed as per manufacturers instructions: ☒ Yes ☐ No

Time completed: W 6/22/05 8:00

Weather conditions: CLEAR & CALM 75°

Reading Type:(1)	Level: (ppm or indicate units)	Time:	DEPTH	PPE Level:(2)
RUBEN AW0031C BZ/3"	0.1 / 1.2	8:10	70'	D
"	0.2 / UP TO 14	8:25	90'	D
" BZ/3"	0.2 / UP TO 2.5	8:40	120'	D
RUBEN AW0086B BZ/3"	0.0 / 0.1	1230	15'	D
"	0.1 / 1.3	1250	60'	D
"	10.1 / 30	1300	70'	C - DON 1/2 FACE APR (BREEZY OUT)
" BZ/3"/P	25 / 200 / 0.3	1305	75	C
" "	40 / 330 / 0.3	1310	85	C
" "	40.9 / 700 / 1.1	1312	95	C
JORGE AW0053UB BZ/3"	0.1 / 0.4	1315		C
RUBEN AW0086B BZ/3"/P	20 / 116 / 0.8	1320	TD@100 - SET WELL	C
"	0.8 / 13 / 0.1	1325	SET WELL	C
"	5.4 / 29 / 0.5	1330	ADD SAND / PULL AUGERS	C
"	4.0 / 18 / 0.1	1335	ADD SAND / PULL AUGERS	C
"	2.0 / 15 / 0.1	1345	"	BACK TO D
"	1.8 / 6 / 0.1	1350	"	D
JORGE AW0053UB BZ/3"	0.1 / 6.8	1357	"	D
RUBEN AW0032B BZ/3"	0.5 / 56	1423	75'	D
" "	1.7 / 14	1428	95	D

1. Key to Reading Types:
   Breathing Zone-BZ
   Perimeter-P → AT WALMART SIDE OF DRILL RIG ~ 50' FROM RIG (DOWNWIND) @ EXCLUSION ZONE
   Surface-S

2. EPA Levels B, C or D

Comments:

The following information should be maintained for all projects requiring air monitoring.

Form # 4003

Tailgate Safety Meeting Report

The Tailgate Safety Meeting is to supply Haley & Aldrich staff information regarding potential hazards that may be encountered at the site.

Observations of unsafe work practices/conditions that have developed since previous meeting:

JOB NOTES ☑ CHECK WHICH BIN TO DUMP SOIL IN (HAZ / NON-HAZ) ☑ 2/3 FULL = FULL
☑ GROUT COLUMNS TO BE LEFT 4-5' BGS
☑ DECON WATER PUMPED INTO BAKER TANK
☑ MOVE DRUMS FROM MW COOS ☑ DRIVE LANE CLOSED FRIDAY

Location of (or changes in the location of) evacuation routes/safe refuge areas:

SITE ADDRESS : 1451 KNOX ST
EMERGENCY MEETING LOCATION - OUTSIDE GATE @ 1451
HOSPITAL MAP / EMERGENCY CONTACTS ON DASH

Additional Comments: PPE REQUIRED, CHEMICAL HAZARDS - TCE, TOLUENE, MEK, TRAFFIC SAFETY, EXCLUSION ZONES / RIG SPACING, FORKLIFT SAFETY, BACKUP SPOTTERS, HOUSEKEEPING - SOIL / TRASH / WATER, NO SMOKING IN EXCLUSION ZONES

Attendees signatures below indicate that they have attended a briefing on the requirements of the Haley & Aldrich, Inc. Health & Safety Plan for the on-site work tasks, and declare that they understand the provisions and procedures set forth herein while working on this site.

Name (printed)	Signature	Company
Dale Smith	[signature]	WDC
Edmund O'Dwyer	[signature]	W.D.C
M. Baker	M. Baker	W.D.C
D Barry	[signature]	WDC
RICHARD HERNANDEZ	[signature]	WDC
T. NICHOLS	[signature]	WDC
Miguel Alvarado	[signature]	W.D.C
Glenn Androsko	[signature]	H+A
Juan G Alvarez	[signature]	
DENNIS CARLSON	[signature]	FORSMA.

Meeting conducted by: TRAVIS HAMMOND Title: ENGINEER

Signature: [signature] Date/Time: Th 6/23/05

HALEY & ALDRICH

RECORD OF FIELD MONITORING

PROJECT	Boeing C-6	H&A FILE NO.	28882-506
LOCATION	1541 Knox, LA	PROJECT MGR.	P. Jones
CLIENT	Boeing/REC	FIELD REP	G. Androsko
CONTRACTOR	WDC	DATE	6-23-05

Project Description: Ammendment well installation

Task Description:

Instrument Type: 1) Mini RAE, PID — Serial Number: 4045

(OVA, LEL, PID, etc) 2) — Serial Number:

Calibration and/or operational check completed as per manufacturers instructions: ☒ Yes ☐ No

Time completed: 0715 w/ 100ppm Iso

Weather conditions:

Reading Type:(1)	Level: (ppm or indicate units)	Time:	PPE Level:(2)
BZ/S (AW44B)	0.0/0.0	0740	D
(AW52C)	0.0/0.0	0745	D
(AW44B)	0.0/1.4	0753	D
"	0.5/3.5	0801	D
(AW52C)	0.0/0.0	0811	D
"	0.0/0.0	0820	D
"	0.0/0.2	0837	D
(AW44B)	0.0/0.5	0836	D
(AW52C)	0.0/0.0	0953	D
"	0.0/0.0	1019	D
(AW44B)	0.0/0.0	1022	D
(AW54UB)	0.0/0.0	1145	D
"	0.0/0.0	1230	D
"	0.0/0.0	1242	D
"	0.0/5.1	1301	D
"	0.0/0.4	1327	D
(AW51UB)	0.0/0.0	1330	D
"	0.0/0.0	1340	D
(AW54UB)	0.0/0.2	1346	D
(AW51UB	0.0/0.0	1348	D

1. Key to Reading Types:
   Breathing Zone-BZ
   Perimeter-P
   Surface-S

2. EPA Levels B, C or D

Comments:

The following information should be maintained for all projects requiring air monitoring.

HALEY & ALDRICH

RECORD OF FIELD MONITORING

PROJECT	Boeing C-6	H&A FILE NO.	28882-506
LOCATION	1541 Knox, LA	PROJECT MGR.	P. Somes
CLIENT	Boeing/BRC	FIELD REP	G. Androsko
CONTRACTOR	WOC	DATE	6-23-05

Project Description:

Task Description:

Instrument Type: (OVA, LEL, PID, etc) 1) Serial Number:
2) Serial Number:

Calibration and/or operational check completed as per manufacturers instructions: ☐ Yes ☐ No

Time completed:

Weather conditions:

Reading Type:(1)	Level: (ppm or indicate units)	Time:	PPE Level:(2)
BZ/S (AW30B)	0.0/0.0	1543	D
"	0.0/0.0	1547	D
"	0.0/0.0	1602	D
"	0.0/2.0	1618	D

1. Key to Reading Types:
   Breathing Zone-BZ
   Perimeter-P
   Surface-S

2. EPA Levels B, C or D

Comments:

The following information should be maintained for all projects requiring air monitoring.

HALEY & ALDRICH

RECORD OF FIELD MONITORING

PROJECT	PH 4 AW'S	H&A FILE NO.	28882-506
LOCATION	C6	PROJECT MGR.	S. ZACHARY
CLIENT	BOEING	FIELD REP	T. HAMMOND
CONTRACTOR	WDC	DATE	Th 6/23/05

Project Description: BIOINJECTION SYSTEM

Task Description: WELL INSTALLATION

Instrument Type: 1) MINIRAE PLUS CLASSIC PID — Serial Number: EQUIPCO.31/104011

(OVA, LEL, PID, etc) 2) — Serial Number:

Calibration and/or operational check completed as per manufacturers instructions: ☒ Yes ☐ No

Time completed: Th 6/23/05 7:45 CAL CHECK → 96.5 PPM = OK

Weather conditions: LOW CLOUDS & BREEZY 65°

Reading Type:(1)	Level: (ppm or indicate units)	Time:	DEPTH	PPE Level:(2)
RUBEN AW0087C BZ/3"	0.1 / 2.0	10:20	~~70~~ 60'	D
" " BZ/3"/P	5.8 / 200 / 0.8	10:25	~~85~~ 75'	UPGRADE TO C - ESTABLISH EXCLUSION ZONE
" " "	11.6 / 160 / 0.9	10:50	~~112~~ 100	C
" " "	34 / 180 / 0.9	1055	~~120~~ 110	C
" " "	3.8 / 64.5 / 0.2	11:08	~~101 PLUG~~	C
" " "	6.4 / 110 / 0.4	11:25	120'	C
" " "	18 / 49 / 0.3	11:30	CLEAN OUT	C
" " "	14 / 35 / 0.1	11:38	SET WELL	C
" " "	7.8 / 19 / 0.2	11:40	ADDITIONAL ANGLES	C
RUBEN AW0029UB BZ/3"	0.4 / 14	16:00	90'	D

1. Key to Reading Types:
   Breathing Zone-BZ
   Perimeter-P @ EXCLUSION ZONE BOUNDARY ~50' NEAR RIG DOWNWIND
   Surface-S
   3" - THREE INCHES FROM SOIL SURFACE
2. EPA Levels B, C or D

Comments:

The following information should be maintained for all projects requiring air monitoring.

Tailgate Safety Meeting Report

The Tailgate Safety Meeting is to supply Haley & Aldrich staff information regarding potential hazards that may be encountered at the site.

Observations of unsafe work practices/conditions that have developed since previous meeting: _____

Location of (or changes in the location of) evacuation routes/safe refuge areas: _____
SITE ADDRESS : 1451 KNOX ST
EMERGENCY MEETING LOCATION - OUTSIDE GATE @ 1451
HOSPITAL MAP / EMERGENCY CONTACTS ON DASH

Additional Comments: PPE REQUIRED, CHEMICAL HAZARDS - TCE, TOLUENE, MEK, TRAFFIC SAFETY, EXCLUSION ZONES / RIG SPACING, FORKLIFT SAFETY, BACKUP SPOTTERS, HOUSEKEEPING - SOIL / TRASH / WATER, NO SMOKING IN EXCLUSION ZONES

Attendees signatures below indicate that they have attended a briefing on the requirements of the Haley & Aldrich, Inc. Health & Safety Plan for the on-site work tasks, and declare that they understand the provisions and procedures set forth herein while working on this site.

Name (printed)	Signature	Company
T. Nichols		WDC
W. Alvarado		W.D.C
Edmund Dwyer		W.D.C
Juan G Alvarez		WDC
Dale Smith		WDC
Ruben Lopez		W.D.C
D Bonds		WDC
Rey Mata		W.D.C.
Jorge E Gutierrez		WDC
Glenn Androsko		H+A
M. Baker		W.D.C

Meeting conducted by: TRAVIS HAMMOND Title: ENGINEER

Signature: _____ Date/Time: F 6/24/05

HALEY & ALDRICH

RECORD OF FIELD MONITORING

PROJECT	PH 4 AWS	H&A FILE NO.	28882-506
LOCATION	C6	PROJECT MGR.	S. ZACHARY
CLIENT	BOEING	FIELD REP	T. HAMMOND
CONTRACTOR	WDC	DATE	06/24/05

Project Description: PIO INJECTION SYSTEM

Task Description: WELL INSTALLATION

Instrument Type: 1) MINIRAE PLUS CLASSIC PID — Serial Number: EQ0960.31/104011

(OVA, LEL, PID, etc) 2) — Serial Number:

Calibration and/or operational check completed as per manufacturers instructions: ☒ Yes ☐ No

Time completed: 06/24/05 7:50 CAL CHECK → 100

Weather conditions: CLEAR CALM 65°

Reading Type:(1)	Level: (ppm or indicate units)	Time:	DEPTH	PPE Level:(2)
JORGE AW0006B BZ/3"	0.0 / 15	8:20	60	D
" " "	0.8 / 150	8:25	65	D
" " "	0.4 / 35	8:43	~~80~~ 75	D
" " BZ/3'P	0.0 / 54 / 0.6	8:45	80'	D - PERIMETER = RETAINING WALL
" " "	0.4 / 150 / 0.3	8:50	85'	D - BREEZE FROM NORTH
" " "	0.0 / 70 / 0.2	8:53	90'	D
" " "	0.0 / 14 / 0.1	8:57	95'	D
" " "	0.1 / 10 / 0.1	9:05	105'	D
RUBEN AW0042UB BZ/3"	0.1 / 3.0	10:00	~~80~~	D
" " "	0.5 / 18	10:10	90'	D

1. Key to Reading Types:
   - Breathing Zone-BZ
   - Perimeter-P
   - Surface-S
2. EPA Levels B, C or D

Comments:

The following information should be maintained for all projects requiring air monitoring.

HALEY & ALDRICH

RECORD OF FIELD MONITORING

PROJECT	Boeing - C-6	H&A FILE NO.	28882-506
LOCATION	1541 Knox, LA	PROJECT MGR.	P. Somes
CLIENT	Boeing / BRL	FIELD REP	G. Andrioska
CONTRACTOR	WDC	DATE	6-24-05

Project Description: Ammendment well installation

Task Description:

Instrument Type: (OVA, LEL, PID, etc) 1) Mini RAE / PID Serial Number: 4045

2) Serial Number:

Calibration and/or operational check completed as per manufacturers instructions: ☒ Yes ☐ No

Time completed: 6-24-05 @ 0715

Weather conditions: Sunny

Reading Type:(1)	Level: (ppm or indicate units)	Time:	PPE Level:(2)
BZ / S (AW0041C)	0.0 / 0.0	0745	D
(AW0030B)	0.0 / 1.5	0747	D
"	0.0 / 0.8	1031	D
↓ (AW41C)	0.0 / 0.0	1030	D

1. Key to Reading Types:
   Breathing Zone-BZ
   Perimeter-P
   Surface-S

2. EPA Levels B, C or D

Comments:

The following information should be maintained for all projects requiring air monitoring.

Tailgate Safety Meeting Report

The Tailgate Safety Meeting is to supply Haley & Aldrich staff information regarding potential hazards that may be encountered at the site.

Observations of unsafe work practices/conditions that have developed since previous meeting:
NONE.
HOUSEKEEPING - WIND BLOWN TRASH, DUST CONTROL
LEAVE GROUT 4-5' BELOW GROUND
DEVELOPERS - WATER IN BAKER TANK

Location of (or changes in the location of) evacuation routes/safe refuge areas:
SITE ADDRESS : 1451 KNOX ST
EMERGENCY MEETING LOCATION - OUTSIDE GATE @ 1451
HOSPITAL MAP / EMERGENCY CONTACTS ON DASH

Additional Comments: PPE REQUIRED, CHEMICAL HAZARDS - TCE, TOLUENE, MEK, TRAFFIC SAFETY, EXCLUSION ZONES / RIG SPACING, FORKLIFT SAFETY, BACKUP SPOTTERS, HOUSEKEEPING - SOIL / TRAS / WATER, NO SMOKING IN EXCLUSION ZONES

Attendees signatures below indicate that they have attended a briefing on the requirements of the Haley & Aldrich, Inc. Health & Safety Plan for the on-site work tasks, and declare that they understand the provisions and procedures set forth herein while working on this site.

Name (printed)	Signature	Company
T. Nichols	[signature]	WDC
Glenn Andrasko	[signature]	H+A
R. Ranzi	[signature]	H&A
Jason Pottroff	[signature]	WDC
D Bonney	[signature]	WDC
Quintin Hoeppner	Q Hoeppner	W.D.C.
Paul Almanza	[signature]	WDC
Edmund O'Dwyer	[signature]	WDC
Luis Zavala	[signature]	W.D.C
Ruben Lares	[signature]	WDC
Carlos Sanchez Jr	[signature]	W.D.C
Juan G Alvarez	[signature]	WDC

Meeting conducted by: TRAVIS HAMMOND Title: ENGINEER

Signature: [signature] Date/Time: M 6/27/05

HALEY & ALDRICH

RECORD OF FIELD MONITORING

PROJECT	PHASE 4 AW'S	**H&A FILE NO.**	28882-506
LOCATION	C6	**PROJECT MGR.**	S. ZACHARY
CLIENT	BOEING	**FIELD REP**	T. HAMMOND
CONTRACTOR	WDC	**DATE**	M 6/27/05

Project Description: BIOINJECTION SYSTEM

Task Description: WELL INSTALLATION

Instrument Type: 1) MINIRAE PLUS CLASSIC PID — **Serial Number:** EQUIPCO.31 104011

(OVA, LEL, PID, etc) 2) — **Serial Number:**

Calibration and/or operational check completed as per manufacturers instructions: ☒ Yes ☐ No

Time completed: M 6/27/05 8/5 — CAL CHECK → 98.2 — 1200 → SWITCH PID MINIRAE 2000 (SN-4049) CAL CHECK →

Weather conditions: CLOUDY → BREEZY 65°

Reading Type:(1)	Level: (ppm or indicate units)	Time:	DEPTH	PPE Level:(2)
PAUL AW0087B BZ/3"	0.1 / 0.1	8:20	50	D
" " "	0.1 / ~~0.2~~ 0.7	835	65	D
" " "	0.1 / 4.8	846	75	D
" " BZ/3"/P	0.4 / 240 / 0.1	8:50	85	D
" " "	20 ~~8.4~~ / 250 / 0.7	910	100 ~~95~~	UPGRADE TO C. ESTABLISH EXCLUSION ZONE
" " "	0.1 / 20 / 0.3	915	AP PLUG	D - CREW IN C
" " "	0.1 / 40 / 0.1	920	SAND PACK	D - CREW IN C FOR CLEANING
" " "	4.7 / 19 / 0.3	935	SAND PACK	PULL AUGERS C ↳ AUGERS
" " "	0.1 / 15 / 0.2	940	"	C
" " "	0.1 / 30 / 0.2	950	"	C
" " "	0.1 / 10 / 0.1	955	"	D
" AW0026C BZ/3	0.1 / 0.3	12:50	45	D
" " "	0.1 / 1.2	1310	65	D
TED AW0021 C BZ/3/P	0.1 (BREEZY) / 1700 / 0.6	1334	85	C - UPGRADE / EXC. ZONE
PAUL AW0026 C "	4.0 / 48 / 2.8	1338	85	C - UPGRADE
" " "	30 / 700 / 0.6	1345	90	C
" " "	0.8 / 8 / 0.2	1355	118	C
" " "	10 / 50 / 0.6	14:10	SAND	C
" " "	0.1 / 5.6 / 0.1	1430	SURGE	D

1. Key to Reading Types:
   - Breathing Zone-BZ
   - Perimeter-P - AT EXCLUSION ZONE ~50' FROM RIG
   - Surface-S

2. EPA Levels B, C or D

Comments:

The following information should be maintained for all projects requiring air monitoring.

RECORD OF FIELD MONITORING

PROJECT	Boeing - C6	H&A FILE NO.	28882-506
LOCATION	1451 Kno LA	PROJECT MGR.	P. Somes
CLIENT	Boeing / BRC	FIELD REP	G. Androsiko
CONTRACTOR	WDC	DATE	6-27-05

Project Description: Well installation

Task Description:

Instrument Type: 1) mini RAE / PID Serial Number: 4045

(OVA, LEL, PID, etc) 2) Serial Number:

Calibration and/or operational check completed as per manufacturers instructions: ☒ Yes ☐ No

Time completed: 6-27-05 @ 0745

Weather conditions:

Reading Type:(1)	Level: (ppm or indicate units)	Time:	PPE Level:(2)
BZ/S (AW87B)	0.0/0.0	0800	D
(AW20UB)	0.0/0.0	0802	D
"	0.0/0.0	0815	D
(AW41UR)	0.0/0.0	0825	D
(AW20UB)	0.0/0.0	0827	D
"	0.0/0.4	0848	D
(AW12B)	C60' 0.0/0.0	1054	D
"	1.5/200	1104	C
"	95' 3.0/250	1124	C
BZ/S/P "	0.0/10.5/0.0	1227	C
"	0.0/2.5/0.0	1245	D
BZ/S (AW 21C)	0.0/0.0	1247	D
"	0.0/0.0	1259	D
(AW 12C)	0.0/0.4	1320	D
(AW21C)	0.5/2.5	1400	C
BZ/S/P "	0.2/2.8/0.5	1450	D
(AW 7B)	0.0/0.0/0.0	1451	D
"	0.0/0.0/0.0	1456	D
"	0.0/0.0/0.0	1504	
(AW 21C)	0.0/7.5/0.0	1507	

1. Key to Reading Types:
   Breathing Zone-BZ
   Perimeter-P
   Surface-S

2. EPA Levels B, C or D

Comments:

The following information should be maintained for all projects requiring air monitoring.

HALEY & ALDRICH

RECORD OF FIELD MONITORING

PROJECT	Boeing C-6	H&A FILE NO.	28862-502
LOCATION	1541 Knox LA	PROJECT MGR.	P. Somei
CLIENT	Boeing/BRC	FIELD REP	G. Androsko
CONTRACTOR	WDC	DATE	6-27-05

Project Description:

Task Description: See pg 1 of 1

Instrument Type: (OVA, LEL, PID, etc) 1) Serial Number:
2) Serial Number:

Calibration and/or operational check completed as per manufacturers instructions: ☐ Yes ☐ No

Time completed:

Weather conditions:

Reading Type:(1)	Level: (ppm or indicate units)	Time:	PPE Level:(2)
BZ/S/P (AW21C)	0.0/0.0/0.0	1515	D
"	0.0/0.0/0.0	1530	D

1. Key to Reading Types:
   Breathing Zone-BZ
   Perimeter-P
   Surface-S

2. EPA Levels B, C or D

Comments:

The following information should be maintained for all projects requiring air monitoring.

Tailgate Safety Meeting Report

The Tailgate Safety Meeting is to supply Haley & Aldrich staff information regarding potential hazards that may be encountered at the site.

Observations of unsafe work practices/conditions that have developed since previous meeting: NONE

Location of (or changes in the location of) evacuation routes/safe refuge areas:
SITE ADDRESS : 1451 KNOX ST
EMERGENCY MEETING LOCATION - OUTSIDE GATE @ 1451
HOSPITAL MAP / EMERGENCY CONTACTS ON DASH

Additional Comments: PPE REQUIRED, CHEMICAL HAZARDS - TCE, TOLUENE, MEK, TRAFFIC SAFETY, EXCLUSION ZONES / RIG SPACING, FORKLIFT SAFETY, BACKUP SPOTTERS, HOUSEKEEPING - SOIL / TRAS / WATER, NO SMOKING IN EXCLUSION ZONES

Attendees signatures below indicate that they have attended a briefing on the requirements of the Haley & Aldrich, Inc. Health & Safety Plan for the on-site work tasks, and declare that they understand the provisions and procedures set forth herein while working on this site.

Name (printed)	Signature	Company
D Bandy	[signature]	WDC
Carlos Sanchez Jr	[signature]	WDC
T. Nichols	[signature]	WDC
Quintin Hoeppner	[signature]	WDC
Edmund C Boyer	[signature]	WDC
Jason Pottroff	[signature]	WDC
R. Ramzi	[signature]	H&A
Juan G Alvarez	[signature]	WDC
[illegible]	[signature]	WDC
Fernando Arredondo	[signature]	WDC
Ruben S. Lopez	[signature]	WDC
Glenn Androsko	[signature]	H+A
Joshua Check	[signature]	WDC
DENNIS CARLSON	[signature]	BOEING

Meeting conducted by: TRAVIS HAMMOND Title: ENG

Signature: [signature] Date/Time: TU 6/28/05

HALEY & ALDRICH

RECORD OF FIELD MONITORING

PROJECT	PH 4 AWS	H&A FILE NO.	28882-506
LOCATION	C6	PROJECT MGR.	S. ZACHARY
CLIENT	BOEING	FIELD REP	T. HAMMOND
CONTRACTOR	WDC	DATE	TU 6/28/05

Project Description: BIO INJECTION SYSTEM

Task Description: WELL INSTALLATION

Instrument Type: (OVA, LEL, PID, etc) 1) MINIRAE ~~Four~~ 2000 PID Serial Number: 104011

2) Serial Number:

Calibration and/or operational check completed as per manufacturers instructions: ☒ Yes ☐ No

Time completed: TU 6/28/05 7:30 CAL CHECK w/ 100 PPM ISO → 98.3

Weather conditions: MOSTLY CLOUDY & CALM 60°

Reading Type:(1)	Level: (ppm or indicate units)	Time:	PPE Level:(2)
PAOC AW-0034C BZ/3	0.1 / 4.0 (? moisture)	8:25 30'	D
" " "	0.1 / 0.4	9:20 70'	D
" " P "	0.0 / 179	9:35 90	D
" " "	2.5 ~~0.1~~ / 170	9:45 105'	D
" "	0.7 / 25 /	9:47 110'	D
" " BZ/3'	2.0 (some hits of 4.0) / 75	9:49 115'	D
" " "	0.1 / 14	14:00 GROUT	D
" AW-0028B BZ/3"	0.0 / 0.0	1530 50'	D

1. Key to Reading Types:
   - Breathing Zone-BZ
   - Perimeter-P
   - Surface-S

2. EPA Levels B, C or D

Comments: HAD MOISTURE ISSUES, READINGS CONTINUALLY INCREASING. CLEANED PID LAMP & SENSOR, RE-CALIBRATED

The following information should be maintained for all projects requiring air monitoring.

HALEY & ALDRICH

RECORD OF FIELD MONITORING

PROJECT	Boeing C-6	H&A FILE NO.	28882-506
LOCATION	1451 Knox LA	PROJECT MGR.	P. Somes
CLIENT	Boeing /BRC	FIELD REP	G. Androsko
CONTRACTOR	WDC	DATE	6-28-05

Project Description: Well installation

Task Description:

Instrument Type: (OVA, LEL, PID, etc) 1) Min. RAE / PID Serial Number: 4045

2) Serial Number:

Calibration and/or operational check completed as per manufacturers instructions: ☒ Yes ☐ No

Time completed: 0730 100 PPM Iso.

Weather conditions: Sunny

Reading Type:(1)	Level: (ppm or indicate units)	Time:	PPE Level:(2)
BZ/S (AW25C)	0/0	0850	D
(AW7B)	0/0.6	0854	D
(AW25C)	0/0	0915	D
BZ/S/P (AW25C)	0.8/146/0.0	0944	C
(AW8B)	0.0/0.0/0.0	0945	D
(AW25C)	0.0/0.8/0.0	0949	C
(AW25C)	0.5/32/0.0	0952	C
"	5.0/125/0.0	0956	C
(AW8B)	0.0/0.5/0.0	0959	D
(AW25C)	0.5/30/0.0	1007	C
"	0.5/250/0.0	1020	C
"	0.5/25/0.0	1042	C
"	0.5/280/0.0	1108	C
(AW8B)	0.0/0.0/0.0	1110	D
(AW25C)	0.3/68/0.0	1123	C
(AW18C) 45'	0.0/20/0.0	1333	D
(AW25C)	0.0/5.0/0.0	1335	D
(AW18C)	0.0/100/0.0	1345	D
"	25/180/1.0	1349	↑ C
"	1.7/380/1.5	1356	C

1. Key to Reading Types:
   - Breathing Zone-BZ
   - Perimeter-P
   - Surface-S

2. EPA Levels B, C or D

Comments:

The following information should be maintained for all projects requiring air monitoring.

HALEY & ALDRICH

RECORD OF FIELD MONITORING

PROJECT	Boeing C-6	H&A FILE NO.	28882-506
LOCATION	1541 Knox; LA	PROJECT MGR.	P. Semes
CLIENT	Boeing / BRC	FIELD REP	G. Androsko
CONTRACTOR	WDC	DATE	6-28-05

Project Description:

Task Description:

Instrument Type: 1) See pg 1 of 2 Serial Number:
(OVA, LEL, PID, etc) 2) Serial Number:

Calibration and/or operational check completed as per manufacturers instructions: ☐ Yes ☐ No

Time completed:

Weather conditions:

Reading Type:(1)	Level: (ppm or indicate units)	Time:	PPE Level:(2)
BZ/S/P (AW18C)	0.2/1.5/0.0	1408	C
"	0.2/1.5/0.2	1420	↓ D
(AW26B)	0.0/0.0/0.0	1555	D
"	0.0/0.4/0.0	1603	D
"	0.0/0.3/0.0	1611	D
"	0.0/10.1/0.0	1623	D
"	0.5/10.0/0.0	1630	D
" @80'	2.5/265/0.5	1643	↑ C

1. Key to Reading Types:
   Breathing Zone-BZ
   Perimeter-P
   Surface-S

2. EPA Levels B, C or D

Comments:

The following information should be maintained for all projects requiring air monitoring.

Tailgate Safety Meeting Report

The Tailgate Safety Meeting is to supply Haley & Aldrich staff information regarding potential hazards that may be encountered at the site.

Observations of unsafe work practices/conditions that have developed since previous meeting: _____

FINISH UP STRONG – HOUSEKEEPING, GROUT, SAFETY

BE PATIENT – IF WERE NOT AVAILABLE, CLEAN UP YOUR & OTHERS TRASH

Location of (or changes in the location of) evacuation routes/safe refuge areas: _____

SITE ADDRESS : 1451 KNOX ST

EMERGENCY MEETING LOCATION – OUTSIDE GATE @ 1451

HOSPITAL MAP / EMERGENCY CONTACTS ON DASH

Additional Comments: PPE REQUIRED, CHEMICAL HAZARDS – TCE, TOLUENE, MEK, TRAFFIC SAFETY, EXCLUSION ZONES / RIG SPACING, FORKLIFT SAFETY, BACKUP SPOTTERS, HOUSEKEEPING – SOIL / TRASH / WATER, NO SMOKING IN EXCLUSION ZONES

Attendees signatures below indicate that they have attended a briefing on the requirements of the Haley & Aldrich, Inc. Health & Safety Plan for the on-site work tasks, and declare that they understand the provisions and procedures set forth herein while working on this site.

Name (printed)	Signature	Company
Edmund O'Dwyer		W.D.C
Quintin Hoppin		W.D.C.
[illegible]		WDC
R. Ramzi		H&A
Carlos Sandoval Jr		WDC
T Nicholls		WDC
Jason Pattroff		WDC
D Banoy		WDC
JOSHUA CHECK		
Michael Rodney		W.D.C
Jorge Solis		WDC
Juan G Alvarez		WDC
Dale Smith		WDC
William Thomas		WDC
Manuel Alvarado		W D C

Meeting conducted by: TRAVIS HAMMOND Title: ENG

Signature: _____ Date/Time: W 6/29/05

Ignacio Gutierrez	WDC
RUBEN S. LARES	W.D.C
Fernando Amedondo	W.D.C

Javier Rios	W.D.C.

HALEY & ALDRICH

RECORD OF FIELD MONITORING

PROJECT	PAH AW's	H&A FILE NO.	28882-506
LOCATION	C6	PROJECT MGR.	S. ZACHARY
CLIENT	BOEING	FIELD REP	T. Hammond
CONTRACTOR	WDC	DATE	W 6/29/05

Project Description: BIOREMEDIATION SYSTEM

Task Description: WELL INSTALLATION

Instrument Type: 1) MINIRAE 2000 PID — Serial Number: 4049

(OVA, LEL, PID, etc) 2) — Serial Number:

Calibration and/or operational check completed as per manufacturers instructions: ☒ Yes ☐ No

Time completed: W 6/29/05 7:45

Weather conditions: CLEAR & BREEZY 70°

Reading Type:(1)	Level: (ppm or indicate units)	Time:	DEPTH	PPE Level:(2)
(1) RUBER AW0034B BZ/3"	0.0/0.0	8:00	40	D
(2) PAHC AW0028B "	0.0/10	8:02	GROUT	D
(1) BZ/3'	0.1/150 BREEZY	8:20	85'	D
(2) (1) BZ/3'/P	14/200/0.1	8:30	95'	C UPGRADE
(1)	10/40/0.1	8:55	SAND	C
(2) AW0016B BZ/3"	0.0/0.0	9:40	45	D
(1)	0.1/27/0.1	9:45	GROUT	D
(2)	0.1 (BREEZY)/360/0.1	10:15	80	D
(3)	0.1/1400/0.6	10:35	100'	D
(1) AW0025B BZ/3"	0.1/436/0.5	12:55	90'	D
TED AW0013C BZ/3	0.0/140	16:16	80'	

1. Key to Reading Types:
   - Breathing Zone-BZ
   - Perimeter-P
   - Surface-S
2. EPA Levels B, C or D

Comments:

The following information should be maintained for all projects requiring air monitoring.

RECORD OF FIELD MONITORING

PROJECT	Boeing C-6	H&A FILE NO.	28882-506
LOCATION	1451 Knox Ln	PROJECT MGR.	P. Sones
CLIENT	Boeing/BRC	FIELD REP	G. Androsko
CONTRACTOR	WDC	DATE	6-29-05

Project Description: Well installation

Task Description:

Instrument Type: 1) Mini RAE, PID — Serial Number: 4045
(OVA, LEL, PID, etc) 2) — Serial Number:

Calibration and/or operational check completed as per manufacturers instructions: ☒ Yes ☐ No

Time completed: 0715 w 100 ppm Isobutylene

Weather conditions: Sunny

Reading Type:(1)	Level: (ppm or indicate units)	Time:	PPE Level:(2)
BZ/S/P (AW26B)	0.2/1.7/0.0	0754	D
(AW23B)	0.0/0.0/0.0	0807	D
(AW166LB)	0.0/2.0/0.0	0809	D
(AW23B)	0.0/0.0/0.0	0817	D
(AW166LB)	0.0/0.0/0.0	0820	D
(AW23B)	0.0/0.0/0.0	0848	D
(AW166LB)	0.0/0.0/0.0	0853	D
(AW23B)	85/854/0.0 (*1)	0910	D
(AW14C)	0.0/2.0/0.0	0940	D
(AW15B)	0.0/0.0/0.0	0941	D
(AW14C)	0.0/0.0/0.0	0950	D
(AW15B)	0.0/0.0/0.0	0951	D
(AW14C)	0.0/0.5/0.0	1007	D
(AW15B)	0.0/0.0/0.0	1008	D
"	0.0/0.0/0.0	1023	D
(AW14C)	0.0/0.0/0.0	1024	D
(AW25B)	0.0/0.0/0.0	1312	D
(AW13C)	0.0/0.0/0.0	1531	D
(AW13C)	0.0/0.0/0.0	1537	D
(AW25B)	0.0/0.0/0.0	1540	

1. Key to Reading Types:
   Breathing Zone-BZ
   Perimeter-P
   Surface-S

2. EPA Levels B, C or D

Comments: (*1) Breathing zone readings too high - shut down drilling

2.

The following information should be maintained for all projects requiring air monitoring.

HALEY & ALDRICH

RECORD OF FIELD MONITORING

PROJECT	Boeing C-6	H&A FILE NO.	28882-506
LOCATION	1451 Knox, LA	PROJECT MGR.	P. Sones
CLIENT	Boeing/BRC	FIELD REP	G. Androsko
CONTRACTOR	WDC	DATE	6-29-05

Project Description:

Task Description:

Instrument Type: 1) see pg 1 of 1 Serial Number:

(OVA, LEL, PID, etc) 2) Serial Number:

Calibration and/or operational check completed as per manufacturers instructions: ☐ Yes ☐ No

Time completed:

Weather conditions:

Reading Type:(1)	Level: (ppm or indicate units)	Time:	PPE Level:(2)
BZ/S/P (A613C)	0.0/0.0/0.0	1545	D

1. Key to Reading Types:
   Breathing Zone-BZ
   Perimeter-P
   Surface-S

2. EPA Levels B, C or D

Comments:

The following information should be maintained for all projects requiring air monitoring.

Tailgate Safety Meeting Report

The Tailgate Safety Meeting is to supply Haley & Aldrich staff information regarding potential hazards that may be encountered at the site.

Observations of unsafe work practices/conditions that have developed since previous meeting: _____
CHECK DRILLING EXPERIENCE (2-3 YRS)

Location of (or changes in the location of) evacuation routes/safe refuge areas: _____
SITE ADDRESS : 1451 KNOX ST
EMERGENCY MEETING LOCATION - OUTSIDE GATE @ 1451
HOSPITAL MAP / EMERGENCY CONTACTS ON DASH

Additional Comments: PPE REQUIRED, CHEMICAL HAZARDS - TCE, TOLUENE, MEK, TRAFFIC SAFETY, EXCLUSION ZONES / RIG SPACING, FORKLIFT SAFETY, BACKUP SPOTTERS, HOUSEKEEPING - SOIL / TRASH / WATER, NO SMOKING IN EXCLUSION ZONES

Attendees signatures below indicate that they have attended a briefing on the requirements of the Haley & Aldrich, Inc. Health & Safety Plan for the on-site work tasks, and declare that they understand the provisions and procedures set forth herein while working on this site.

Name (printed)	Signature	Company
Glenn Androsko	[illegible]	H+A
T. Nichols	[illegible]	WDC
D. Bowen	[illegible]	WDC
Jason Porter	[illegible]	WDC
Edmund O'Dwyer	[illegible]	W.D.C
Gilberto Martinez	[illegible]	WDC
Miguel Alvarado	[illegible]	W.D.C
Ruben Lopez	[illegible]	WDC
Javier Rios	[illegible]	W.D.C
Ignacio Gutierrez	Ignacio Gutierrez	WDC
R. Ramzi	Ramzi D. Al	H&A
Dale Smith	[illegible]	WDC
Dennis Cameron	Dennis Cam	BOEM

Meeting conducted by: TRAVIS HAMMOND Title: EMS

Signature: [illegible] Date/Time: Th 6/30/05

HAMILTON & ALDRICH

RECORD OF FIELD MONITORING

PROJECT	Boeing C-6	H&A FILE NO.	28882-506
LOCATION	1451 Knox LA	PROJECT MGR.	P. Somes
CLIENT	Boeing/BRL	FIELD REP	G. Androsko
CONTRACTOR	WDC	DATE	6-30-05

Project Description: Well installation

Task Description:

Instrument Type: 1) Mini RAE / PID — Serial Number: 4045

(OVA, LEL, PID, etc) 2) — Serial Number:

Calibration and/or operational check completed as per manufacturers instructions: ☒ Yes ☐ No

Time completed: 0730 w/ 100ppm Isobutylene

Weather conditions: Cloudy

Reading Type:(1)	Level: (ppm or indicate units)	Time:	PPE Level:(2)
BZ/S/P (AW 13C)	0.0/0.0/0.0	0750	D
(AW167LB)	0.0/0.4/0.0	0800	D
(AW15B)	0.0/0.2/0.0	0801	D
(AW14C)	0.0/0.0/0.0	0802	D
(AW167LB)	0.0/0.0/0.0	0814	D
"	0.0/0.0/0.0	0829	D
(AW23B)	0.0/20./0.0	1051	D
"	8.5/160/0.5	1055	↑ C
"	2.7/38.5/0.4	1114	C
"	4.5/40/0.2	1231	C
(AW11B)	0.0/0.0/0.0	1233	D
"	0.0/0.0/0.0	1246	D
(AW 23B)	5.0/65/1.0	1252	C
(AW11B)	2.5/200/0.5	1303	↑ C
"	1.5/35/0.0	1346	C
"	0.2/15/0.0	1401	↓ D
(AW23B)	0.1/10.5/0.0	1400	↓ D
(AW18B)	0.0/0.0/0.0	1519	D
(AW21B)	0.0/0.0/0.0	1521	D
"	0.0/10.0/0.0	1532	D

1. Key to Reading Types:
   Breathing Zone-BZ
   Perimeter-P
   Surface-S

2. EPA Levels B, C or D

Comments:

The following information should be maintained for all projects requiring air monitoring.

HALEY & ALDRICH

RECORD OF FIELD MONITORING

PROJECT	Boeing C-6	H&A FILE NO.	28882-506
LOCATION	1451 Knox LA	PROJECT MGR.	P. Sanes
CLIENT	Boeing / BRC	FIELD REP	G. Andrasko
CONTRACTOR	WDC	DATE	6-30-05

Project Description:

Task Description:

Instrument Type: 1) See pg 1 of 2 Serial Number:
(OVA, LEL, PID, etc) 2) Serial Number:

Calibration and/or operational check completed as per manufacturers instructions: ☐ Yes ☐ No

Time completed:

Weather conditions:

Reading Type:(1)	Level: (ppm or indicate units)	Time:	PPE Level:(2)
BZ/S/P (AW18B)	0.5/120/0.0	1533	D
"	9.5/180/2.5	1535	↑ C
(AW21B)	0.2/4.5/0.0	1540	D
(AW18B)	5.8/61/0.5	1543	C
(AW21B)	4.5/1000/0.8	1555	↑ C
"	10.5/180/0.5	1615	C
(AW18B)	1.5/80/0.0	1617	C
"	0.5/20/0.0	1630	C
(AW21B)	0.5/15/0.0	1635	C
"	4.5/85/0.5	1650	C
(AW18B)	0.5/20/0.0	1655	↓ D

1. Key to Reading Types:
   Breathing Zone-BZ
   Perimeter-P
   Surface-S

2. EPA Levels B, C or D

Comments:

The following information should be maintained for all projects requiring air monitoring.

HALEY & ALDRICH

RECORD OF FIELD MONITORING

PROJECT	PA 4 AUCS	H&A FILE NO.	28882-500
LOCATION	C6	PROJECT MGR.	S. ZACHARY
CLIENT	BOEING	FIELD REP	T. HAMMOND
CONTRACTOR	WDC	DATE	Th 6/30/05

Project Description: BIOREMEDIATION SYSTEM

Task Description: WELL INSTALLATION

Instrument Type: (OVA, LEL, PID, etc)
1) MINIRAE 2000 PID — Serial Number: 104011
2) — Serial Number:

Calibration and/or operational check completed as per manufacturers instructions: ☒ Yes ☐ No

Time completed: Th 6/30/05 8:00

Weather conditions: FOGGY / LOW CLOUDS & CALM 65°

Reading Type:(1)	Level: (ppm or indicate units)	Time:	DEPTH	PPE Level:(2)
RUBEN AW0167UB BZ/3"	0.0 / 0.0	850	80	D
" AW0019C BZ/3"	0.0 / 0.0	1230	20'	D
" " "	0.0 / 0.0	1255	75'	D
" " "	0.0 / 0.0	1305	85	D

1. Key to Reading Types:
   Breathing Zone-BZ
   Perimeter-P
   Surface-S

2. EPA Levels B, C or D

Comments:

The following information should be maintained for all projects requiring air monitoring.

Tailgate Safety Meeting Report

The Tailgate Safety Meeting is to supply Haley & Aldrich staff information regarding potential hazards that may be encountered at the site.

Observations of unsafe work practices/conditions that have developed since previous meeting: Use certified forklift operators only, gloves and respirators in haz. areas

Location of (or changes in the location of) evacuation routes/safe refuge areas: Meet at gate near street

Additional Comments: Keep spacing around rigs, truck traffic, vests, note your surroundings

Attendees signatures below indicate that they have attended a briefing on the requirements of the Haley & Aldrich, Inc. Health & Safety Plan for the on-site work tasks, and declare that they understand the provisions and procedures set forth herein while working on this site.

Name (printed)	Signature	Company
Edward O'Dwyer	Edward O'Dwyer	W.D.C
Roger Lopez	[illegible]	W.D.C
Filberto Martinez	[illegible]	W.D.C
JOSHUA CHECK	Joshua Check	W.D.C
JAVIER RIOS	[illegible]	W.D.C.
Ignacio Gutierrez	Ignacio Gutierrez	W.D.C
R. Ramziff	[illegible]	H&A
Jason Ottroff	Jason Ottroff	WDEI

Meeting conducted by: Glenn Androsko Title: Field Rep.

Signature: Glenn Androsko Time: 0705

Tailgate Safety Meeting Report

The Tailgate Safety Meeting is to supply Haley & Aldrich staff information regarding potential hazards that may be encountered at the site.

Observations of unsafe work practices/conditions that have developed since previous meeting: Check valves while pumping

Location of (or changes in the location of) evacuation routes/safe refuge areas: 19503 Normandie Ave.

Additional Comments: Watch for truck traffic, gloves when contacting water, traffic cones

Attendees signatures below indicate that they have attended a briefing on the requirements of the Haley & Aldrich, Inc. Health & Safety Plan for the on-site work tasks, and declare that they understand the provisions and procedures set forth herein while working on this site.

Name (printed)	Signature	Company
William Thomas	William Thomas	WDC
Eddie Herrell	Eddie Herrell	WDC
R. Ramzi	Ramzi R. Ali	H&A
Dennis Carlson	Dennis Carlson	Boeing

Meeting conducted by: Glenn Androsko Title: Field Rep.

Signature: Glenn Androsko Time: 0705

Tailgate Safety Meeting Report

The Tailgate Safety Meeting is to supply Haley & Aldrich staff information regarding potential hazards that may be encountered at the site.

Observations of unsafe work practices/conditions that have developed since previous meeting: _____

NONE

☐ TAKE EMPTY DRUMS BACK UNLESS THEY HAVE MUD IN THEM

Location of (or changes in the location of) evacuation routes/safe refuge areas: _____

SITE ADDRESS : 1451 KNOX ST

EMERGENCY MEETING LOCATION - OUTSIDE GATE @ 1451

HOSPITAL MAP / EMERGENCY CONTACTS ON DASH

Additional Comments: PPE REQUIRED, CHEMICAL HAZARDS - TCE, TOLUENE, MEK, TRAFFIC SAFETY, EXCLUSION ZONES / RIG SPACING, FORKLIFT SAFETY, BACKUP SPOTTERS, HOUSEKEEPING - SOIL / TRASH / WATER, NO SMOKING IN EXCLUSION ZONES

Attendees signatures below indicate that they have attended a briefing on the requirements of the Haley & Aldrich, Inc. Health & Safety Plan for the on-site work tasks, and declare that they understand the provisions and procedures set forth herein while working on this site.

Name (printed)	Signature	Company
T. Nicholls	[signature]	WDC
Ignacio Gutierrez	Ignacio Gutierrez	WDC
JAVIER RIOS	[signature]	W.D.C.

Meeting conducted by: TRAVIS HAMMOND Title: ENGINEER

Signature: [signature] Date/Time: TU 7/12/05

HALEY & ALDRICH

RECORD OF FIELD MONITORING

PROJECT	PHASE 2 AW's	H&A FILE NO.	28882-506
LOCATION	C6	PROJECT MGR.	SCOTT ZACHARY
CLIENT	BOEING	FIELD REP	TRAVIS HAMMOND
CONTRACTOR	WDC EXPLORATION	DATE	Tu 7/12/05

Project Description: BIOINJECTION SYSTEM

Task Description: WELL INSTALLATION

Instrument Type: (OVA, LEL, PID, etc) 1) MINIRAE 2000 PID Serial Number: 4049

2) Serial Number:

Calibration and/or operational check completed as per manufacturers instructions: ☒ Yes ☐ No

Time completed: Tu 7/12/05 8:00 CALL CHECK = 97.6 PPM

Weather conditions: LOW CLOUDS & CALM 70°

Reading Type:(1)	Level: (ppm or indicate units)	Time:	DEPTH	PPE Level:(2)
TED AW0013C BZ/3"	0.0 / UP TO 14	9:00	40'	D
"	0.0 / UP TO 30	9:40	65	D
↳ PID REACTING STRONGLY TO MOISTURE. PID CONTINUED				CLIMBING WITH
REMOVED TO FRESH AIR. RE-CALIBRATED W/ 100 PPM ISO				& FRESH AIR (UPWIND)
9:45 PID CONTINUES TO CLIMB DUE TO MOISTURE				

1. Key to Reading Types:
   - Breathing Zone-BZ
   - Perimeter-P
   - Surface-S
2. EPA Levels B, C or D

Comments:

The following information should be maintained for all projects requiring air monitoring.