McCORMICK AND BAXTER CREOSOTING CO. SITE

PORTLAND PLANT

Portland, Oregon

SITEWIDE RECORD DRAWING

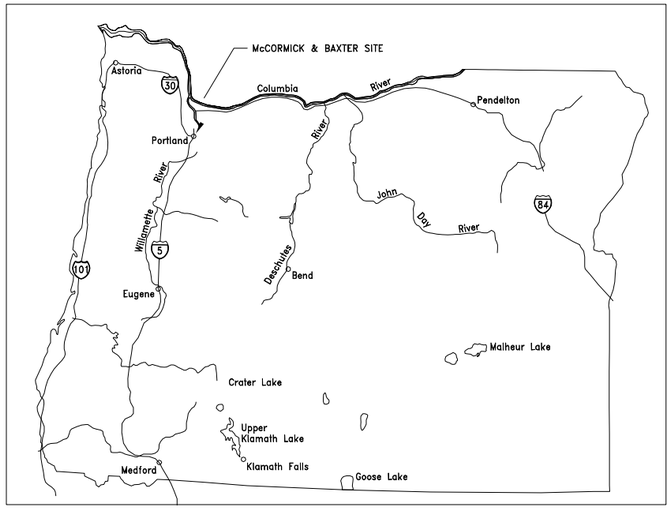

VICINITY MAP

INDEX OF DRAWINGS

DRAWING NUMBER	SHEET TITLE
1 OF 15	TITLE SHEET: SITE LOCATION
2 OF 15	SEDIMENT CAP FEATURES
3 OF 15	UPLAND CAP FEATURES
4 OF 15	HOT SPOT EVEVATION & BURIED DEBRIS AREAS
5 OF 15	GW MONITORING AND EXTRACTION WELLS
6 OF 15	BARRIER WALL: PLAN
7 OF 15	BARRIER WALL: PROFILE
8 OF 15	SITE ALIGNMENT
9 OF 15	SECTIONS
10 OF 15	SEDIMENT CAP DETAILS – SHEET 1
11 OF 15	SEDIMENT CAP DETAILS – SHEET 2
12 OF 15	UPLAND CAP DETAILS – SHEET 1
13 OF 15	UPLAND CAP DETAILS – SHEET 2
14 OF 15	UPLAND CAP DETAILS – SHEET 3
15 OF 15	BARRIER WALL DETAILS

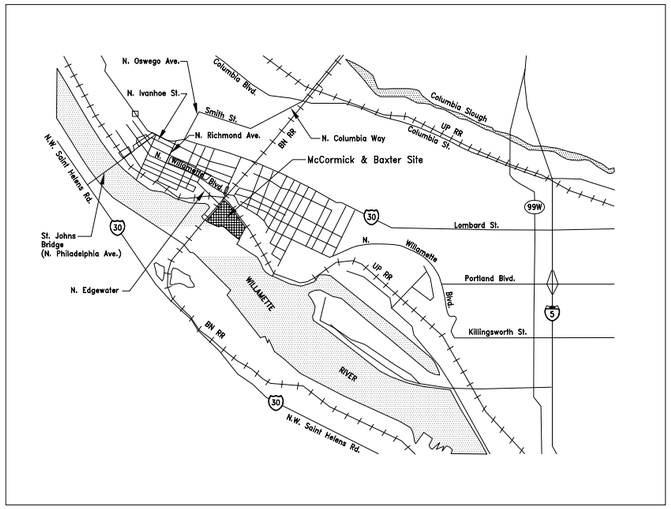

SITE LOCATION MAP

Prepared for:

OREGON DEPARTMENT OF ENVIRONMENTAL QUALITY LAND QUALITY DIVISION

811 SW Sixth Ave.
Portland, Oregon 97204

by:

Ecology and Environment, Inc.
333 SW Fifth Ave.
Portland, Oregon 97204

NO.	DATE	DWN	APP'D	DESCRIPTION
				REVISIONS

ecology and environment, inc.
International Specialists in the Environment
Portland, Oregon

DESIGNED BY: C. NANCARROW
CHECKED BY:
DRAWN BY: C. NANCARROW
APPROVED BY: A. WHITMAN

DRAWING 1

TITLE SHEET: SITE LOCATION

Sitewide Record Drawings
McCormick & Baxter Superfund Site
Portland, Oregon

SCALE	DATE ISSUED	C.A.D. FILE NO.
NOTED	01-24-07	SitewideDrawings_Civil3D.dwg

CAD ON SEANAS\Engineering Documents\McCORMICK & BAXTER\BASEMAP

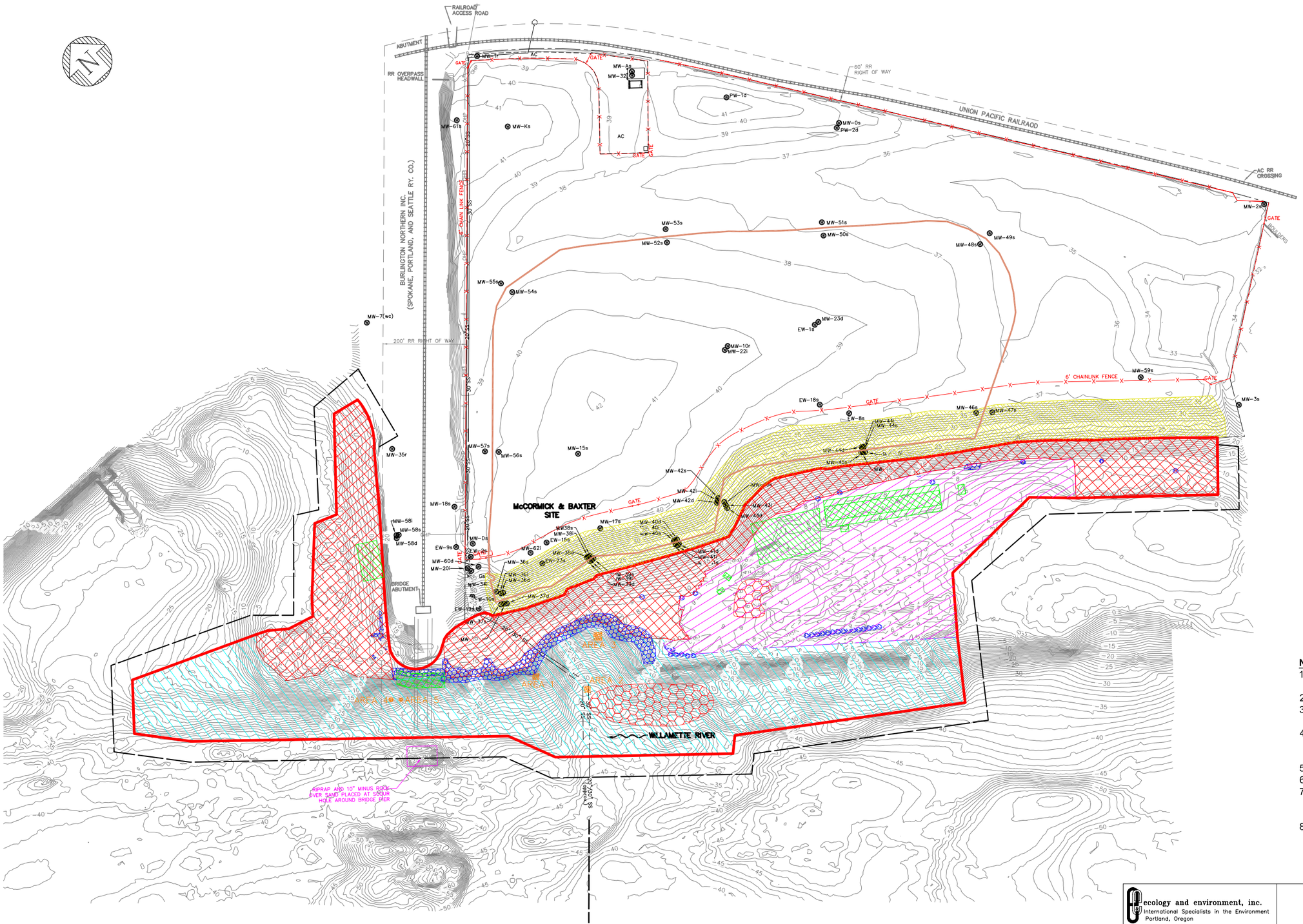

LEGEND:

- PROPERTY LINE
- DSL EASEMENT (#31530-EA)
- ELEVATION CONTOUR (FT. NAVD 88)
- SS — HIGH PRESSURE SEWER LINE
- STM — STORM SEWER
- FENCE
- GRAVEL ACCESS ROAD
- SUBSURFACE BARRIER WALL
- SEDIMENT CAP BOUNDARY
- BOULDER CLUSTERS/ROCK MOUND
- RIPRAP ARMOR
- ORGANOCLAY MAT (DOUBLE LAYER)
- ORGANOCLAY MAT (SINGLE LAYER)
- GRANULAR ORGANOCLAY
- HOT SPOT TREATMENT (THICKENED SAND LAYER)
- ARTICULATED CONCRETE BLOCK
- 6-INCH MINUS ROCK ARMOR
- 10-INCH MINUS ROCK ARMOR
- TURF REINFORCEMENT MAT PLACED OVER EARTHEN CAP
- ADDITIONAL 6-INCH MINUS ROCK PLACEMENT AREA

NOTES:

1. Bathymetric and Terrestrial Surveys conducted by David Evans and Associates, Inc. (DEA).
2. Dates of Bathymetric Survey: April 26, 2006 and October 8, 2007.
3. Dates of Terrestrial Survey: November 17, 2004, and January 24, 2006.
4. Horizontal Datum: North American Datum of 1983 - 91 adj. (NAD83/91), State Plane Coordinate System (SPCS), Oregon North Zone.
5. Units: International Feet.
6. Vertical Datum: North American Vertical Datum of 1988 (NAVD88)
7. Contour Interval: One-Foot. Bathymetric contours were derived from a Digital Terrain Model (DTM) based on a 3-foot grid of multibeam data.
8. Additional rock was placed at the 6" minus rock placement areas on June 26, 2007 and June 27, 2007. These areas have not been surveyed, and the contours on this figure do not reflect the additional rock placement.

SCALE IN FEET: 1"= 120'

0 120 240 360

NO.	DATE	DWN	APP'D	DESCRIPTION
1	6-19-07	CCN	CCN	ISSUED FOR SED CAP REPAIR WORK

REVISIONS

ecology and environment, inc.
International Specialists in the Environment
Portland, Oregon

DESIGNED BY: C. NANCARROW
CHECKED BY:
DRAWN BY: C. NANCARROW
APPROVED BY: A. WHITMAN

DRAWING 2

SEDIMENT CAP FEATURES

Sitewide Record Drawings
McCormick & Baxter Superfund Site
Portland, Oregon

SCALE	DATE ISSUED	C.A.D. FILE NO.
NOTED	11-30-07	SitewideDrawings_Civil3D.dwg

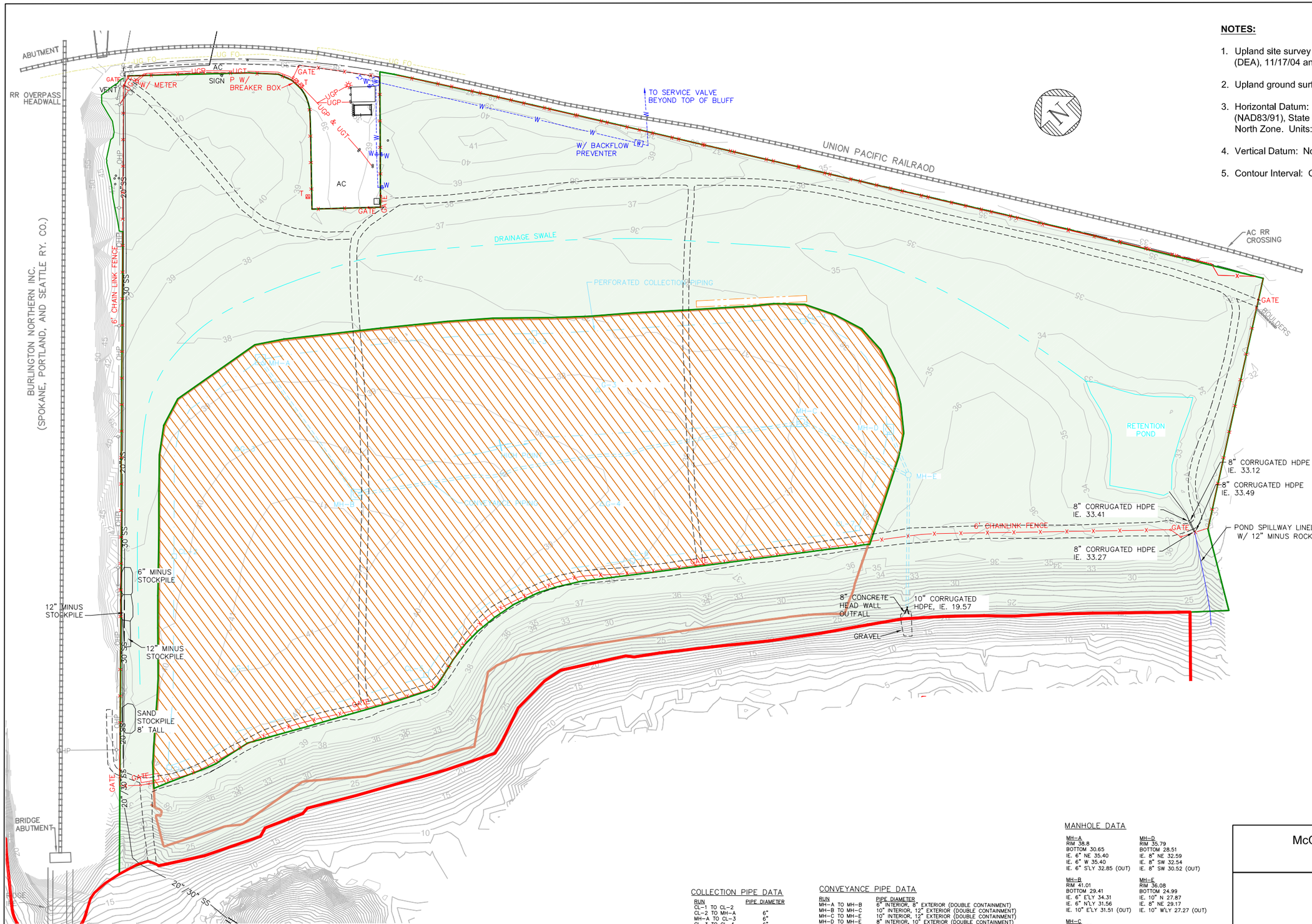

NOTES:

1. Upland site survey conducted by David Evans and Associates, Inc. (DEA), 11/17/04 and 1/24/06.
2. Upland ground surface resurveyed by OTAK, Inc., 9/16/08.
3. Horizontal Datum: North American Datum of 1983 - 91 adj. (NAD83/91), State Plane Coordinate System (SPCS), Oregon North Zone. Units: International Feet.
4. Vertical Datum: North American Vertical Datum of 1988 (NAVD88)
5. Contour Interval: One-Foot.

SCALE IN FEET: 1"= 80'

0 80 160 240

COLLECTION PIPE DATA

RUN	PIPE DIAMETER
CL-1 TO CL-2	6"
CL-2 TO MH-A	6"
MH-A TO CL-3	6"
CL-3 TO CL-4	6"
CL-4 TO MH-D	8"
MH-B TO MH-C	6"
CL-1 TO CL-5	6"
CL-5 TO CL-6	6"
CL-6 TO CL-7	8"
CL-7 TO MH-D	8"

CONVEYANCE PIPE DATA

RUN	PIPE DIAMETER
MH-A TO MH-B	6" INTERIOR, 8" EXTERIOR (DOUBLE CONTAINMENT)
MH-B TO MH-C	10" INTERIOR, 12" EXTERIOR (DOUBLE CONTAINMENT)
MH-C TO MH-E	10" INTERIOR, 12" EXTERIOR (DOUBLE CONTAINMENT)
MH-D TO MH-E	8" INTERIOR, 10" EXTERIOR (DOUBLE CONTAINMENT)
MH-E TO OUTFALL	10"

NOTE: CONVEYANCE PIPE LOCATIONS BASED ON DESIGN PLAN AND FIELD OBSERVATIONS

MANHOLE DATA

MH-A
RIM 38.8
BOTTOM 30.65
IE. 6" NE 35.40
IE. 6" W 35.40
IE. 6" S'LY 32.85 (OUT)

MH-B
RIM 41.01
BOTTOM 29.41
IE. 6" E'LY 34.31
IE. 6" N'LY 31.56
IE. 10" E'LY 31.51 (OUT)

MH-C
RIM 37.36
BOTTOM 27.60
IE. 10" NW 29.61
IE. 6" SW 33.81
IE. 10" SW 29.46 (OUT)

MH-D
RIM 35.79
BOTTOM 28.51
IE. 8" NE 32.59
IE. 8" SW 32.54
IE. 8" SW 30.52 (OUT)

MH-E
RIM 36.08
BOTTOM 24.99
IE. 10" N 27.87
IE. 8" NE 29.17
IE. 10" W'LY 27.27 (OUT)

NOTE: ELEVATIONS IN FT. NAVD 88

McCormick and Baxter Superfund Site
Portland, Oregon

Upland Cap Features

3/10

HARTCROWSER

GSI Water Solutions, Inc.

Drawing
3

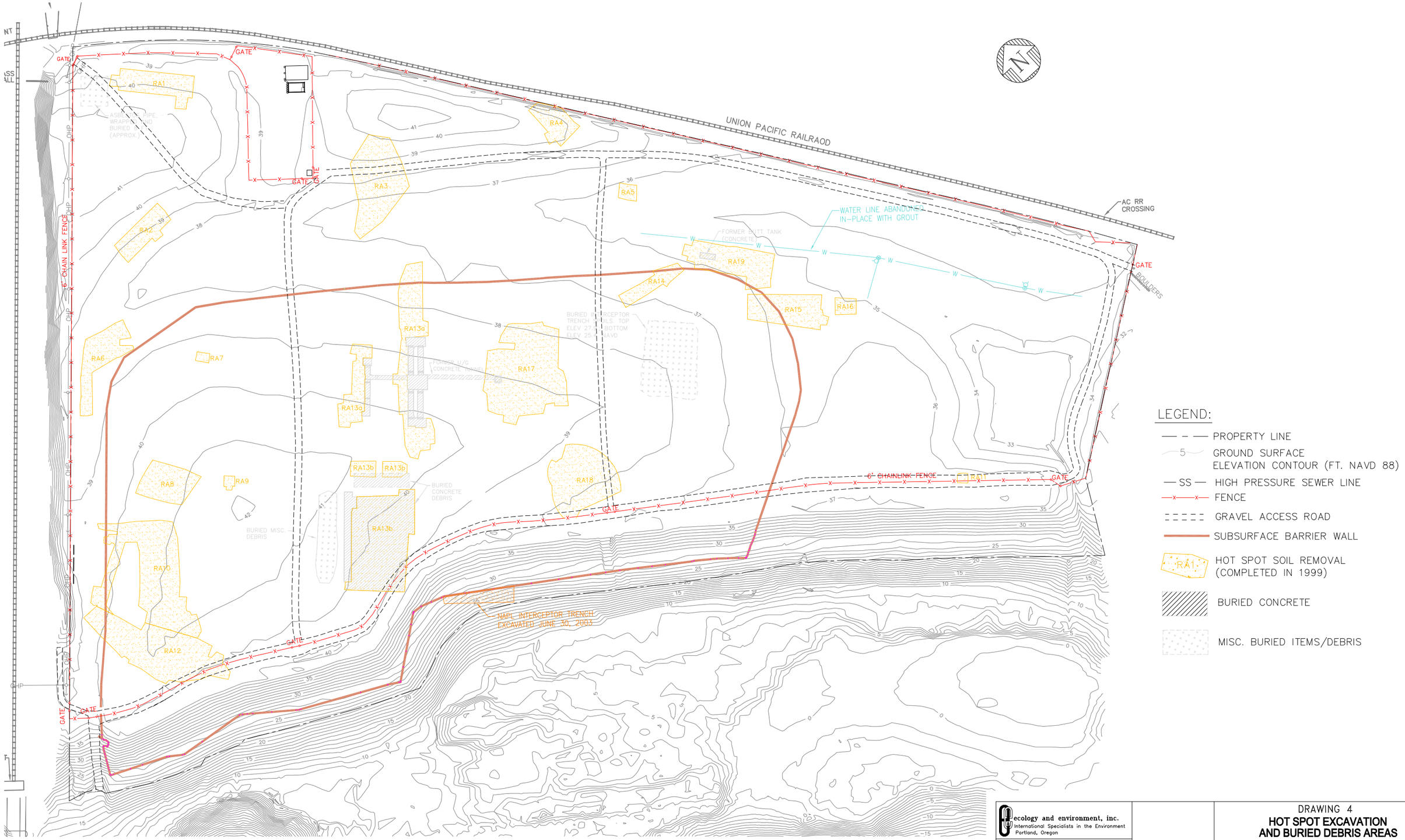

NO.	DATE	DWN.	APP'D	DESCRIPTION
				REVISIONS

ecology and environment, inc.
International Specialists in the Environment
Portland, Oregon

DESIGNED BY: C. NANCARROW
CHECKED BY:
DRAWN BY: C. NANCARROW
APPROVED BY A. WHITMAN

DRAWING 4
HOT SPOT EXCAVATION AND BURIED DEBRIS AREAS
Sitewide Record Drawings
McCormick & Baxter Superfund Site
Portland, Oregon

SCALE	DATE ISSUED	C.A.D. FILE NO.
NOTED	01-24-07	SitewideDrawings_Civil3D.dwg

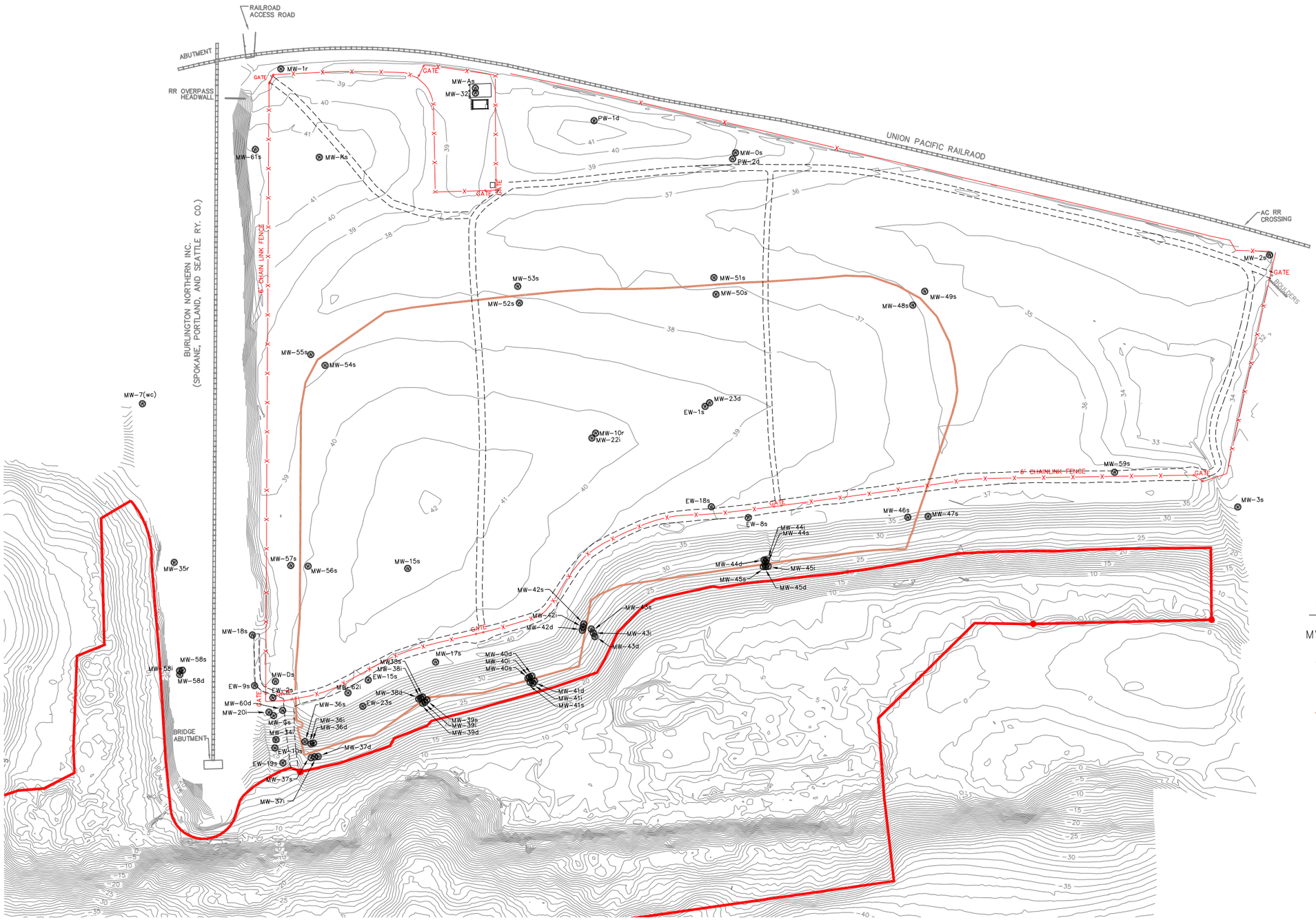

LEGEND:

- MW-55 (W) MONITORING WELLS
- 5 GROUND SURFACE ELEVATION CONTOUR (FT. NAVD 88)
- — SS — HIGH PRESSURE SEWER LINE
- —x——x— FENCE
- GRAVEL ACCESS ROAD
- SUBSURFACE BARRIER WALL
- SEDIMENT CAP BOUNDARY

0 100 200 300

NO.	DATE	DWN.	APP'D	DESCRIPTION
				REVISIONS

ecology and environment, inc.
International Specialists in the Environment
Portland, Oregon

DESIGNED BY: C. NANCARROW
CHECKED BY:
DRAWN BY: C. NANCARROW
APPROVED BY: A. WHITMAN

DRAWING 5

GW MONITORING AND EXTRACTION WELLS

Sitewide Record Drawings
McCormick & Baxter Superfund Site
Portland, Oregon

SCALE	DATE ISSUED	C.A.D. FILE NO.
NOTED	01-24-07	SitewideDrawings_Civil3D.dwg

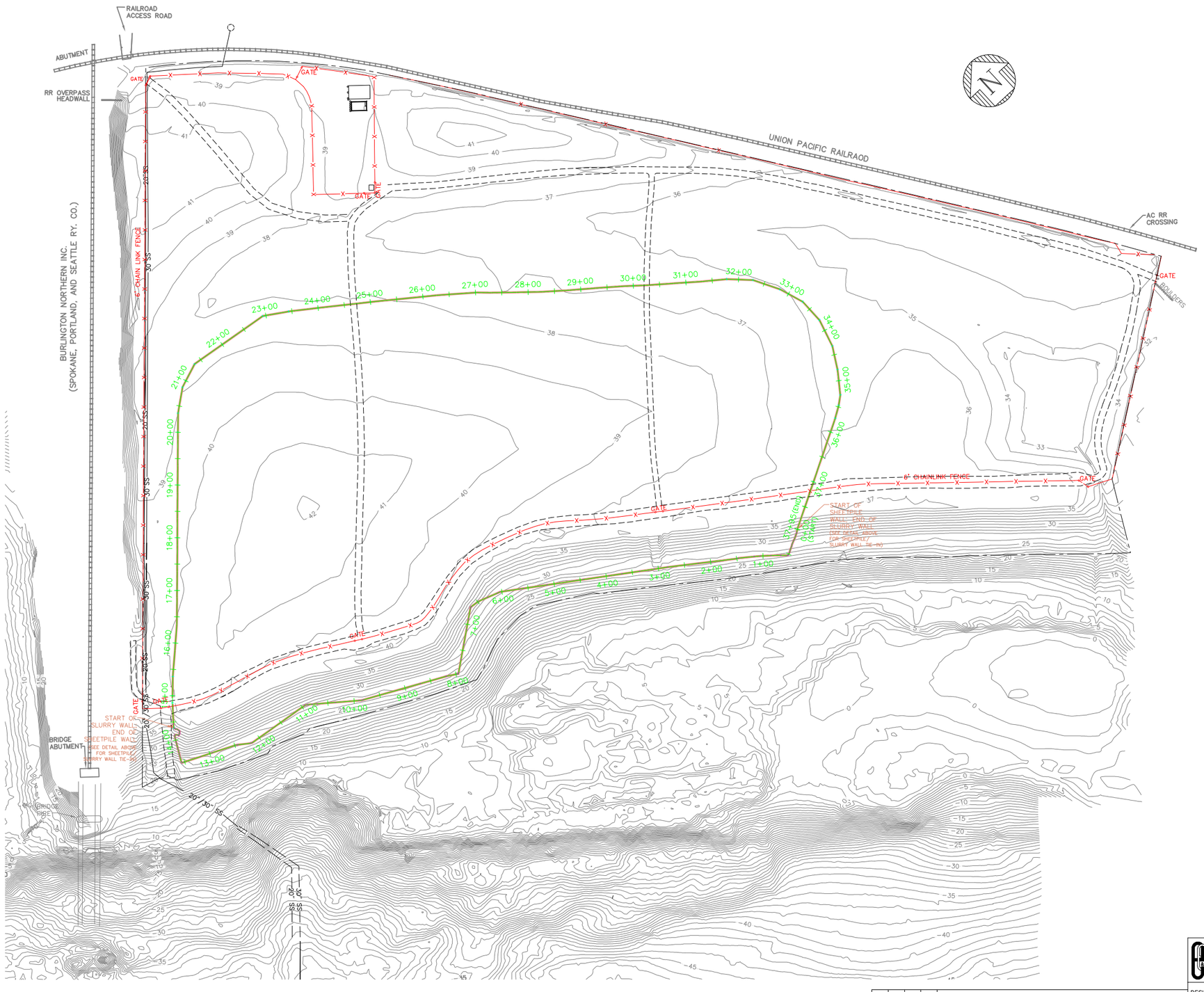

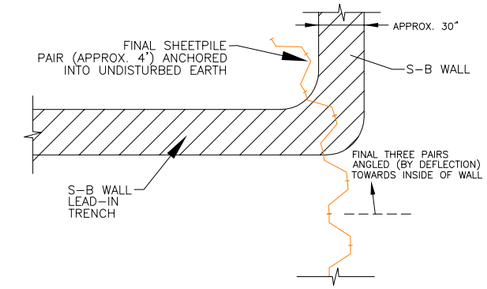

SHEETPILE TO SLURRY WALL TIE-IN DETAIL
NEAR STATION 1+00
NTS

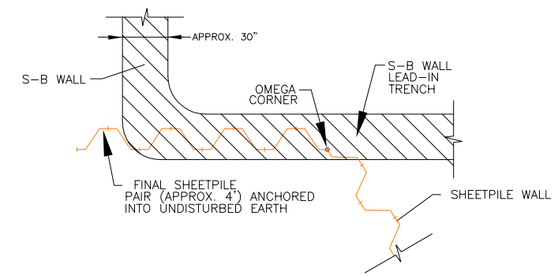

SHEETPILE TO SLURRY WALL TIE-IN DETAIL
NEAR STATION 15+40
NTS

LEGEND:

- PROPERTY LINE
- 5 GROUND SURFACE ELEVATION CONTOUR (FT. NAVD 88)
- SS HIGH PRESSURE SEWER LINE
- FENCE
- GRAVEL ACCESS ROAD
- SUBSURFACE BARRIER WALL
- 2+00 1+00 BARRIER WALL ALIGNMENT WITH STATIONING

SCALE IN FEET: 1"= 100'
0 100 200 300

NO.	DATE	DWN.	APP'D	DESCRIPTION
				REVISIONS

ecology and environment, inc.
International Specialists in the Environment
Portland, Oregon

DESIGNED BY: C. NANCARROW
CHECKED BY:
DRAWN BY: C. NANCARROW
APPROVED BY A. WHITMAN

DRAWING 6

BARRIER WALL: PLAN

Sitewide Record Drawings
McCormick & Baxter Superfund Site
Portland, Oregon

SCALE	DATE ISSUED	C.A.D. FILE NO.
NOTED	01-24-07	SitewideDrawings_Civil3D.dwg

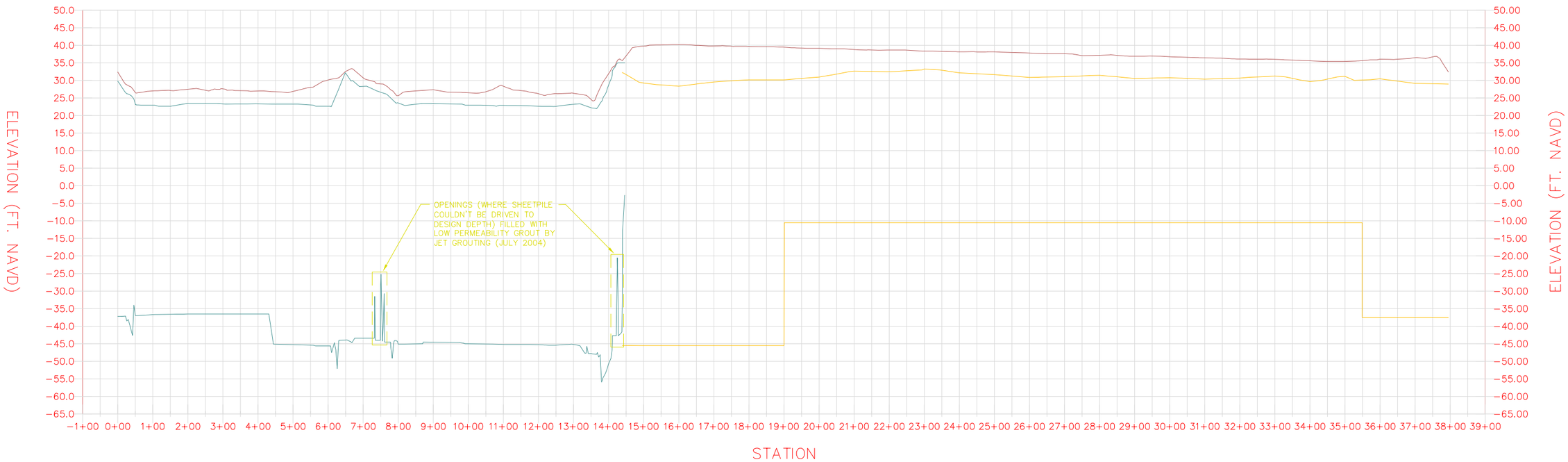

HORIZONTAL SCALE IN FEET: 1"= 150'

0 150 300 450

VERTICAL SCALE IN FEET: 1"= 15'
(10X VERTICAL EXAGGERATION)

0 15 30 45

LEGEND:

- EXISTING GROUND
- SOIL–BENTONITE WALL (SLURRY WALL)
- SHEETPILE WALL

NO.	DATE	DWN.	APP'D	DESCRIPTION

REVISIONS

ecology and environment, inc.
International Specialists in the Environment
Portland, Oregon

DESIGNED BY: C. NANCARROW

CHECKED BY:

DRAWN BY: C. NANCARROW

APPROVED BY A. WHITMAN

DRAWING 7

BARRIER WALL: PROFILE

Sitewide Record Drawings
McCormick & Baxter Superfund Site
Portland, Oregon

SCALE NOTED | 01–24–07 | SitewideDrawings_Civil3D.dwg

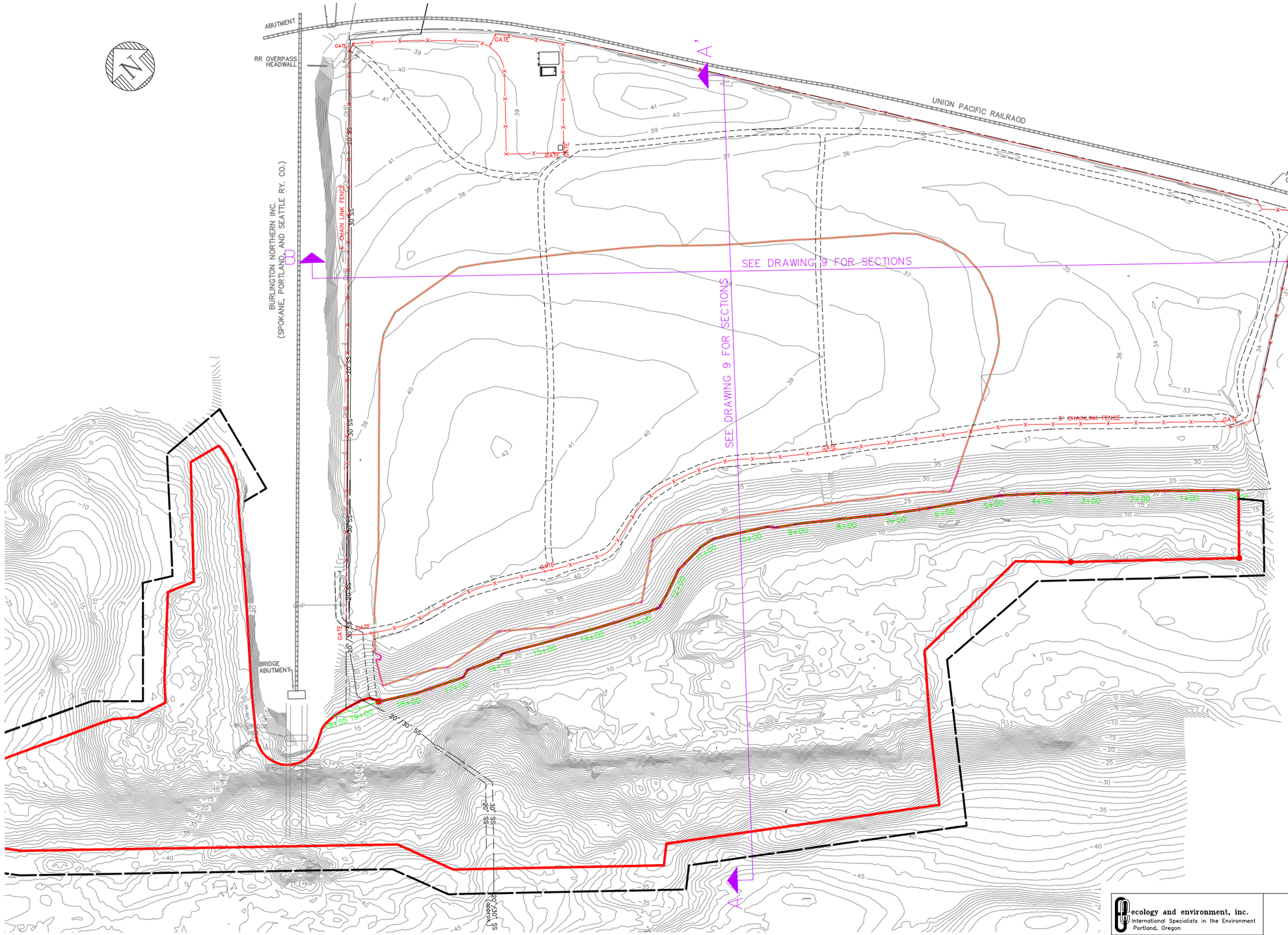

LEGEND:

- PROPERTY LINE
- DSL EASEMENT (#31530-EA)
- 5 GROUND SURFACE ELEVATION CONTOUR (FT. NAVD 88)
- SS HIGH PRESSURE SEWER LINE
- OPH OVERHEAD POWER
- FENCE
- GRAVEL ACCESS ROAD
- SUBSURFACE BARRIER WALL
- SEDIMENT CAP BOUNDARY
- 1+00 0+00 NEW SITE ALIGNMENT WITH STATIONING

NO.	DATE	DWN.	APP'D	DESCRIPTION

REVISIONS

ecology and environment, inc.
International Specialists in the Environment
Portland, Oregon

DESIGNED BY: C. NANCARROW
CHECKED BY:
DRAWN BY: C. NANCARROW
APPROVED BY A. WHITMAN

DRAWING 8

SITE ALIGNMENT

Sitewide Record Drawings
McCormick & Baxter Superfund Site
Portland, Oregon

SCALE	DATE ISSUED	C.A.D. FILE NO.
NOTED	01-24-07	SitewideDrawings_Civil3D.dwg

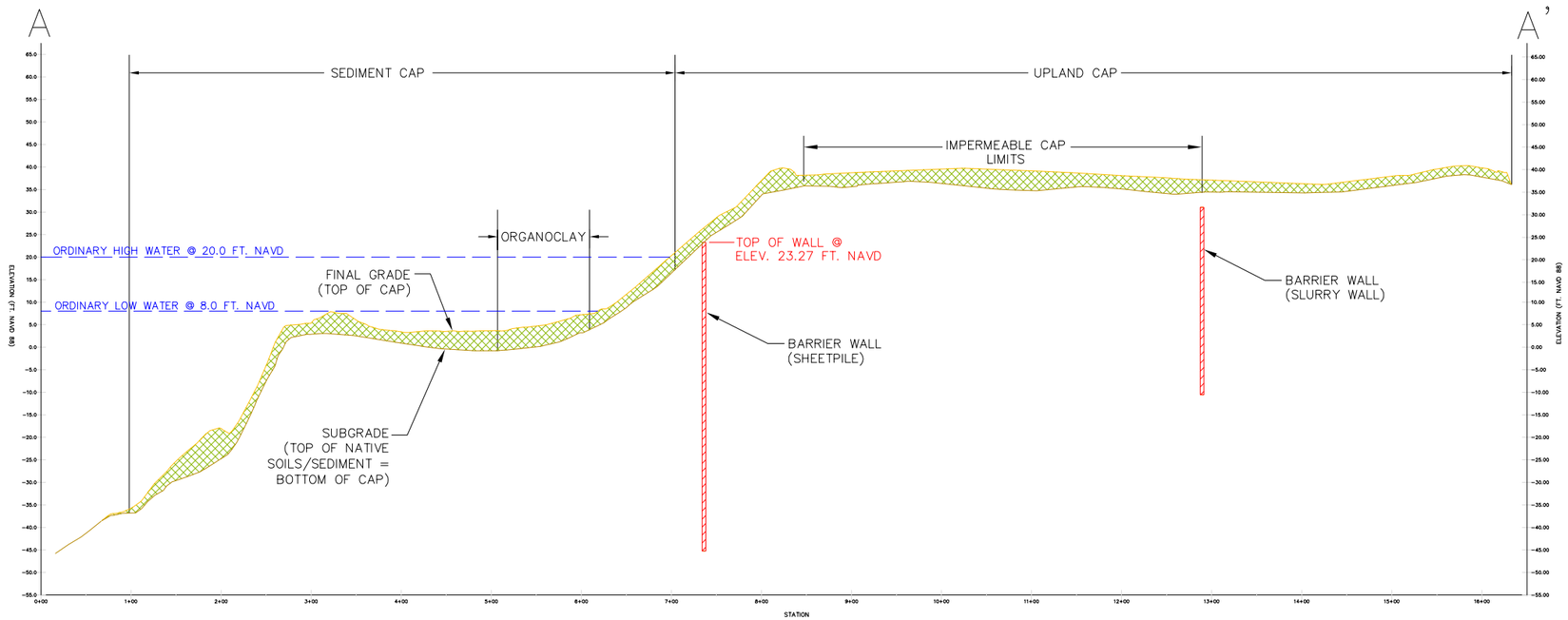

SECTION A–A'

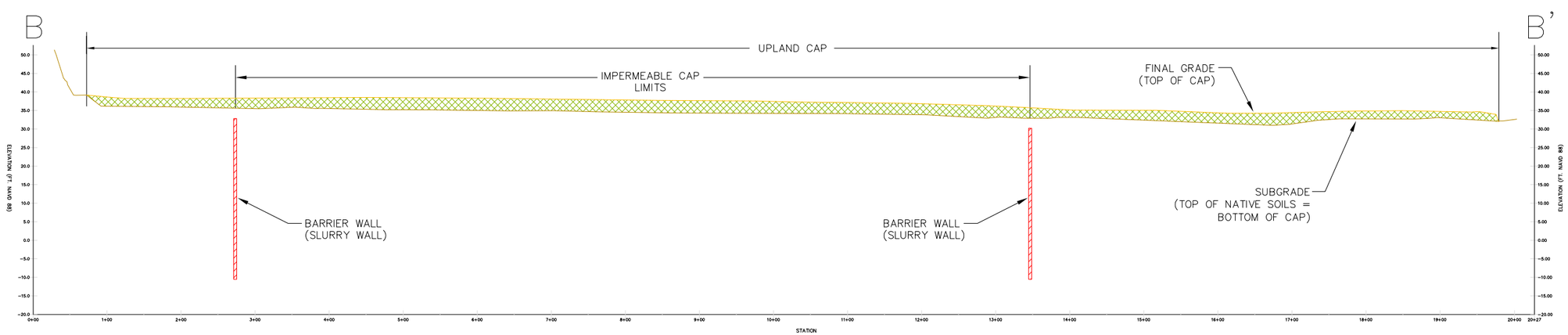

SECTION B–B'

LEGEND:

- FINAL GRADE (TOP OF CAP)
- SUBGRADE/EXISTING GROUND (NATIVE SOILS/SEDIMENTS = BOTTOM OF CAP)
- CAP
- BARRIER WALL

HORIZONTAL SCALE IN FEET: 1"= 80'

0 80 160 240

VERTICAL SCALE IN FEET: 1"= 16'
(5X VERTICAL EXAGGERATION)

0 16 32 48

NO.	DATE	DWN	APP'D	DESCRIPTION
				REVISIONS

ecology and environment, inc.
International Specialists in the Environment
Portland, Oregon

DESIGNED BY: C. NANCARROW
CHECKED BY:
DRAWN BY: C. NANCARROW
APPROVED BY A. WHITMAN

DRAWING 9

SECTIONS

Sitewide Record Drawings
McCormick & Baxter Superfund Site
Portland, Oregon

SCALE	DATE ISSUED	C.A.D. FILE NO.
NOTED	01–24–07	SitewideDrawings_Civil3D.dwg

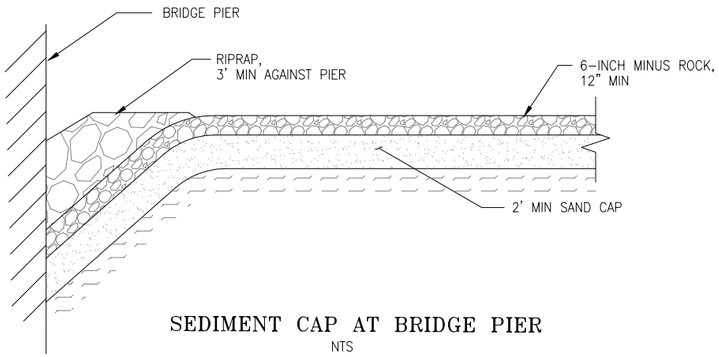

SEDIMENT CAP AT BRIDGE PIER
NTS

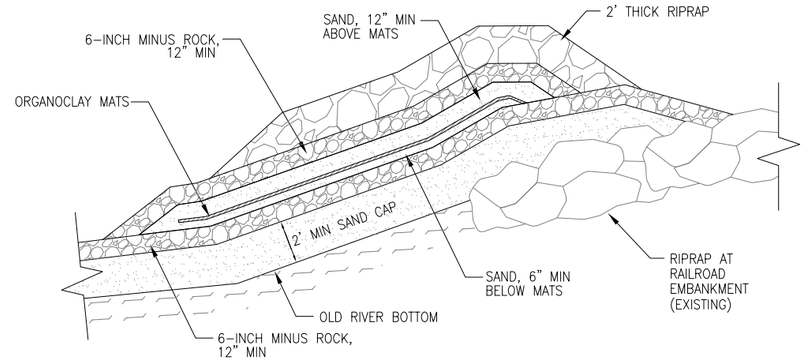

SEDIMENT CAP AT RAILROAD BRIDGE RIPRAP
NTS

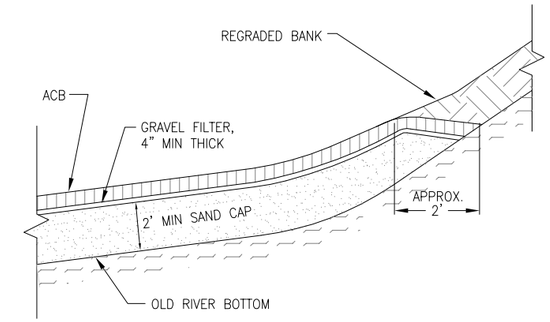

ACB/BANK REGRADE INTERFACE
NTS

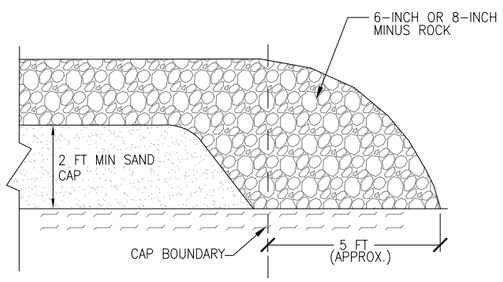

ROCK EDGE AT CAP BOUNDARY
NTS

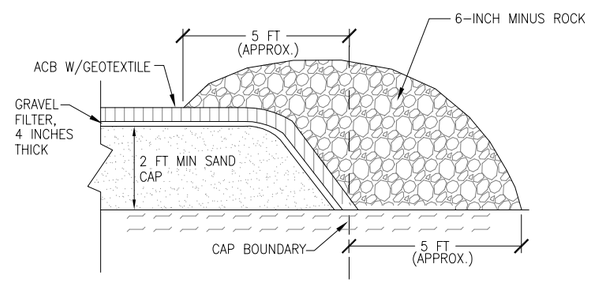

ACB EDGE AT CAP BOUNDARY
NTS

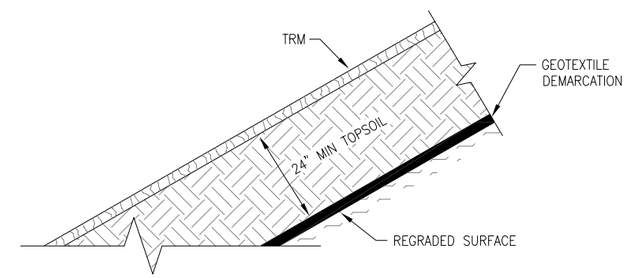

REGRADED BANK TREATMENT
NTS

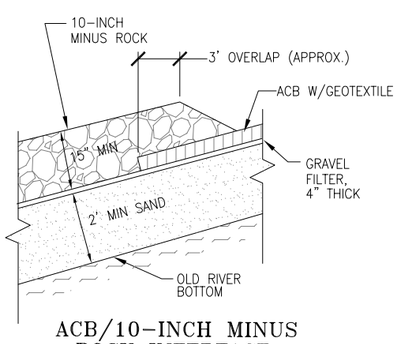

ACB/10-INCH MINUS
ROCK INTERFACE
NTS

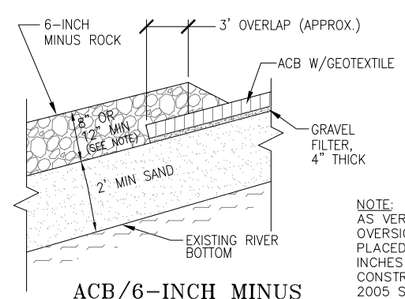

ACB/6-INCH MINUS
ROCK INTERFACE
NTS

NOTE:
AS VERIFIED THROUGH CONSTRUCTION OVERSIGHT, 6-INCH MINUS ROCK WAS PLACED TO THE DESIGN THICKNESS OF 12 INCHES DURING 2004 SEDIMENT CAP CONSTRUCTION AND 8 INCHES DURING 2005 SEDIMENT CAP CONSTRUCTION.

EDGES AND INTERFACES

NO.	DATE	DWN	APP'D	DESCRIPTION

REVISIONS

ecology and environment, inc.
International Specialists in the Environment
Portland, Oregon

DESIGNED BY: C. NANCARROW
CHECKED BY:
DRAWN BY: C. NANCARROW
APPROVED BY A. WHITMAN

DRAWING 10

SEDIMENT CAP DETAILS - SHEET 1

Sitewide Record Drawings
McCormick & Baxter Superfund Site
Portland, Oregon

SCALE	DATE ISSUED	C.A.D. FILE NO.
NOTED	01-24-07	SitewideDrawings_Civil3D.dwg

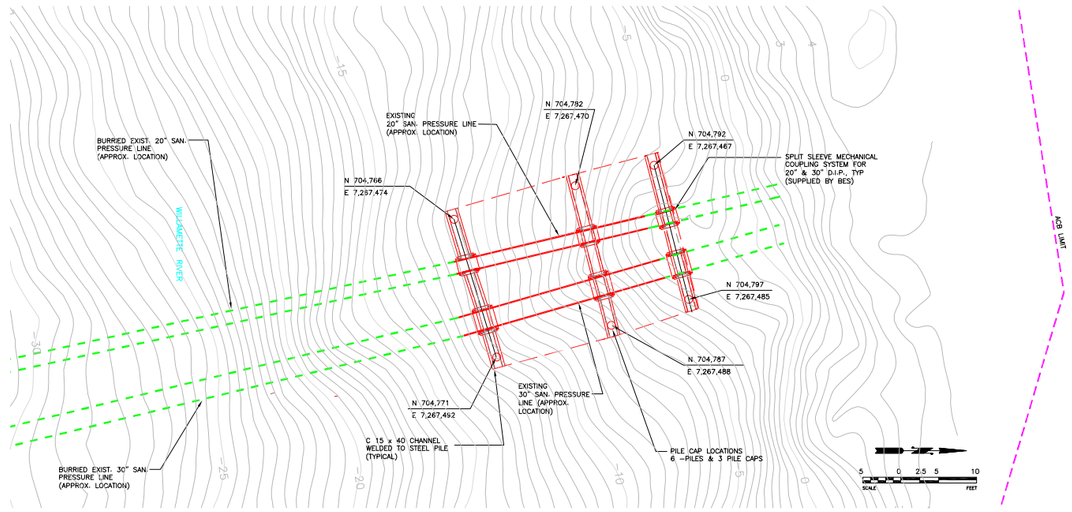

NOTES:
1. DRAWINGS ON THIS SHEET ARE BASED ON RECORD DRAWINGS FROM CITY OF PORTLAND ENVIRONMENTAL SERVICES, FILENAMES "7922C01.DWG", "7922C02.DWG", AND "7922C03.DWG", 05/04/05.
2. FOR MORE DETAILS, SEE "REMEDIAL ACTION CONSTRUCTION SUMMARY REPORT, SEDIMENT CAP COMPLETION (AUGUST 2005 THROUGH OCTOBER 2005)", PREPARED BY ECOLOGY & ENVIRONMENT.
3. VERTICAL DATUM: CITY OF PORTLAND (COP). TO CONVERT TO NAVD88, ADD 2.12 FEET.

MECHANICAL COUPLING SYSTEM FOR SEWER LINES: PLAN VIEW

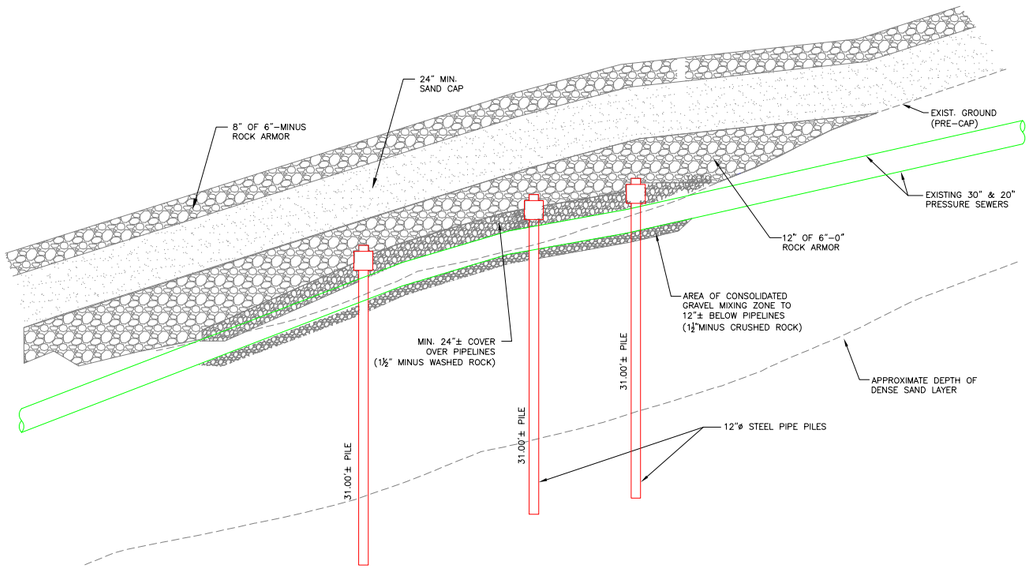

MECHANICAL COUPLING SYSTEM FOR SEWER LINES: PROFILE VIEW

NTS

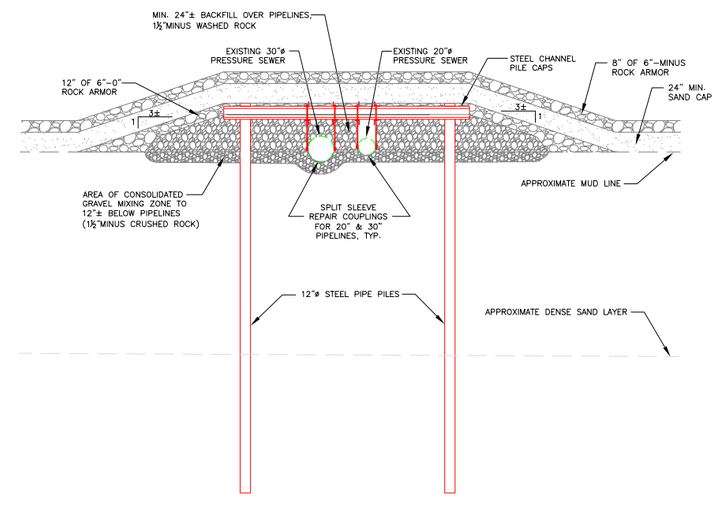

MECHANICAL COUPLING SYSTEM FOR SEWER LINES: SECTION VIEW

NTS

NO.	DATE	DWN.	APP'D	DESCRIPTION
				REVISIONS

ecology and environment, inc.
International Specialists in the Environment
Portland, Oregon

DESIGNED BY: C. NANCARROW
CHECKED BY:
DRAWN BY: C. NANCARROW
APPROVED BY A. WHITMAN

DRAWING 11

SEDIMENT CAP DETAILS - SHEET 2

Sitewide Record Drawings
McCormick & Baxter Superfund Site
Portland, Oregon

SCALE	DATE ISSUED	C.A.D. FILE NO.
NOTED	01-24-07	SitewideDrawings_Civil3D.dwg

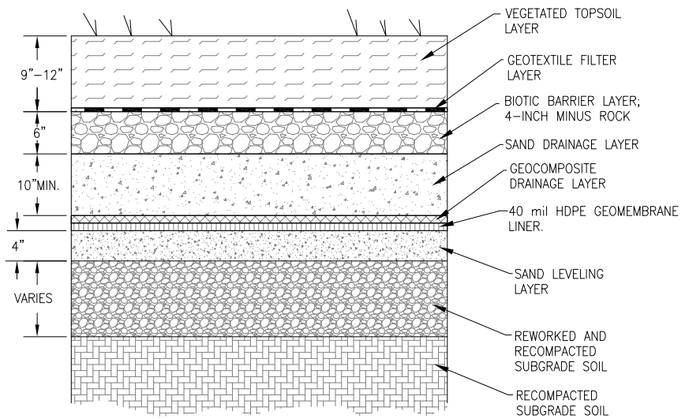

IMPERMEABLE CAP SECTION (TYP.)

NTS

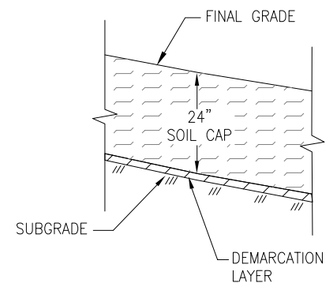

SOIL CAP SECTION (TYP.)
OUTSIDE BARRIER WALL

NTS

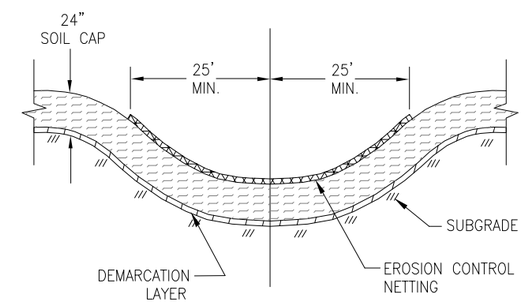

DRAINAGE SWALE

NTS

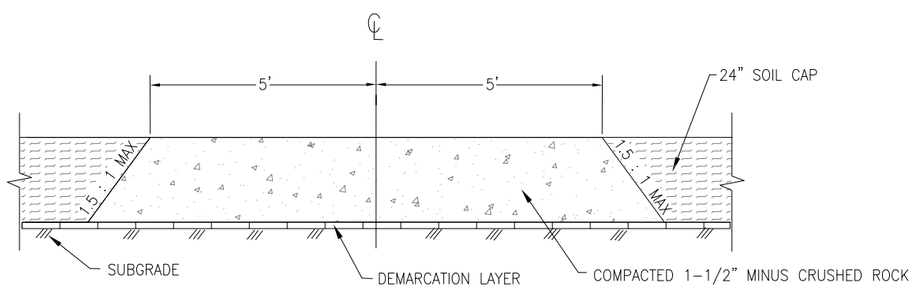

GRAVEL ACCESS ROAD OUTSIDE BARRIER WALL

NTS

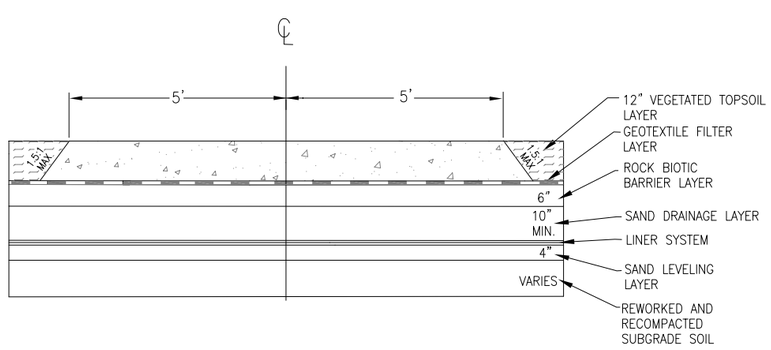

GRAVEL ACCESS ROAD WITHIN BARRIER WALL

NTS

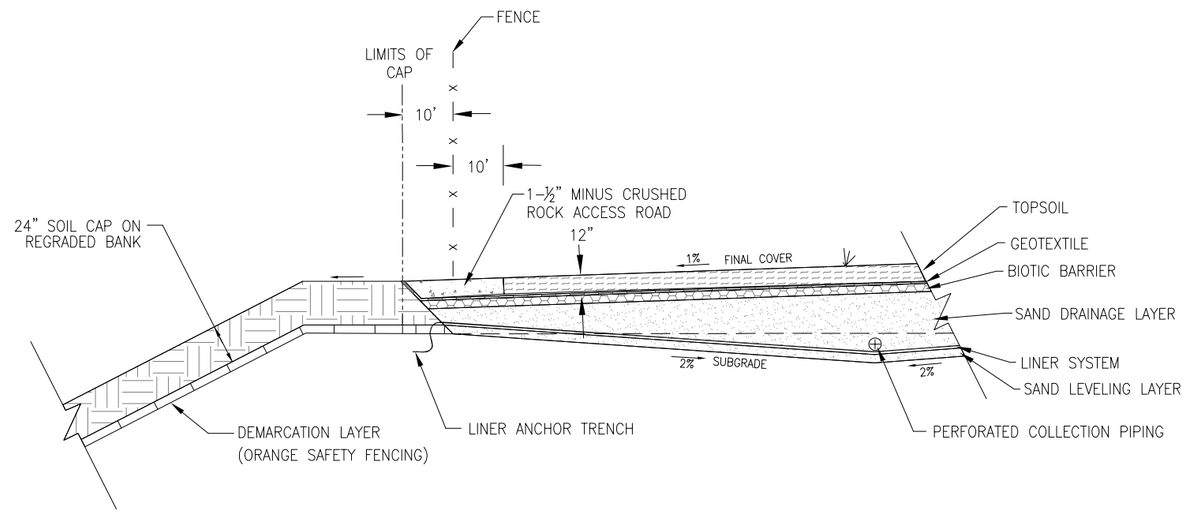

IMPERMEBLE CAP TRANSITION TO BANK

NTS

NO.	DATE	DWN.	APP'D	DESCRIPTION
				REVISIONS

ecology and environment, inc.
International Specialists in the Environment
Portland, Oregon

DESIGNED BY: C. NANCARROW
CHECKED BY:
DRAWN BY: C. NANCARROW
APPROVED BY A. WHITMAN

DRAWING 12

UPLAND CAP DETAILS - SHEET 1

Sitewide Record Drawings
McCormick & Baxter Superfund Site
Portland, Oregon

SCALE	DATE ISSUED	C.A.D. FILE NO.
NOTED	01-24-07	SitewideDrawings_Civil3D.dwg

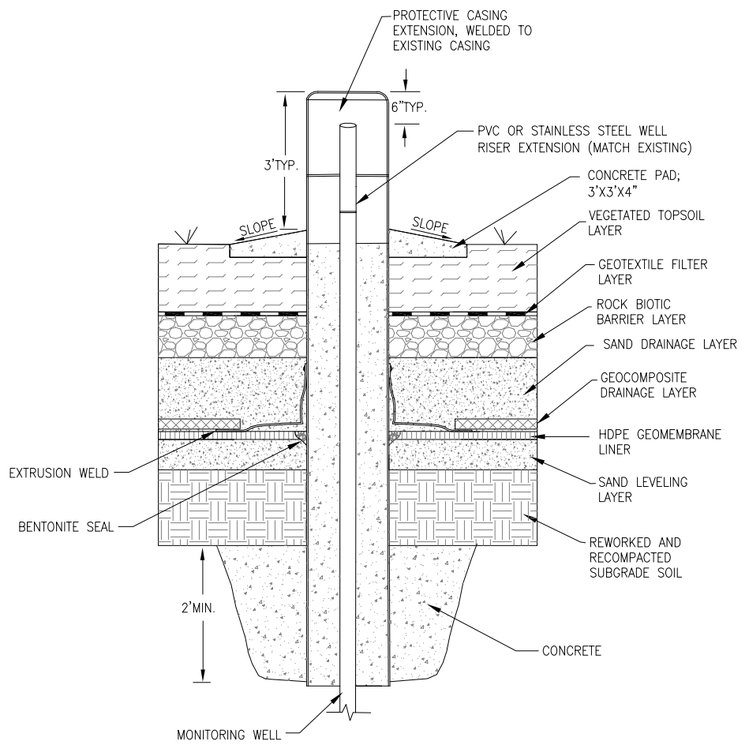

MONITORING WELL
WITHIN IMPERMEABLE CAP
NTS

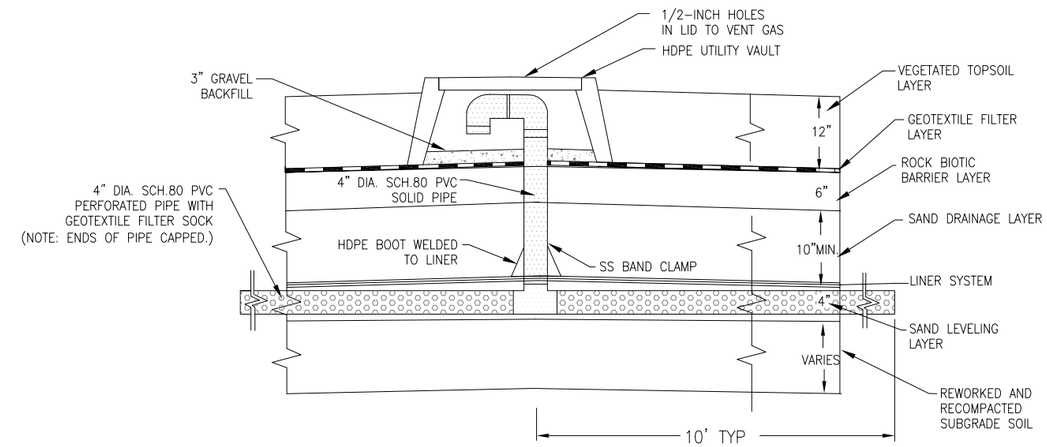

GAS VENT
NTS

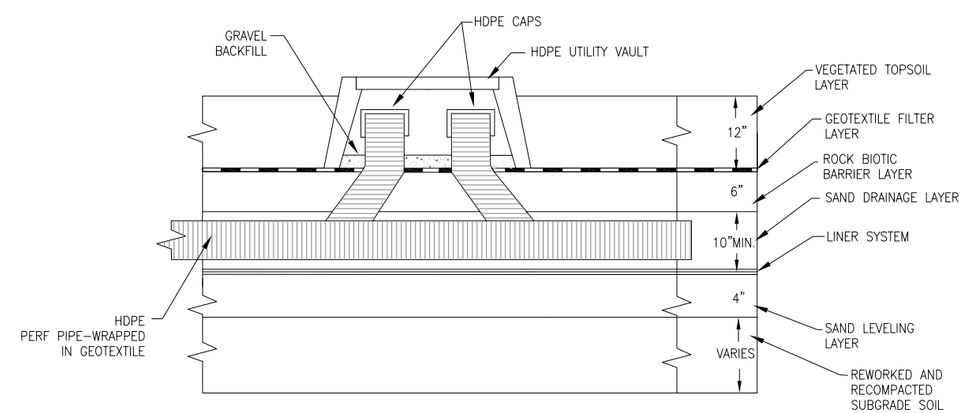

PERFORATED PIPE CLEANOUT
NTS

NO.	DATE	DWN.	APP'D	DESCRIPTION

REVISIONS

ecology and environment, inc.
International Specialists in the Environment
Portland, Oregon

DESIGNED BY: C. NANCARROW
CHECKED BY:
DRAWN BY: C. NANCARROW
APPROVED BY A. WHITMAN

DRAWING 13

UPLAND CAP DETAILS - SHEET 2

Sitewide Record Drawings
McCormick & Baxter Superfund Site
Portland, Oregon

SCALE	DATE ISSUED	C.A.D. FILE NO.
NOTED	01-24-07	SitewideDrawings_Civil3D.dwg

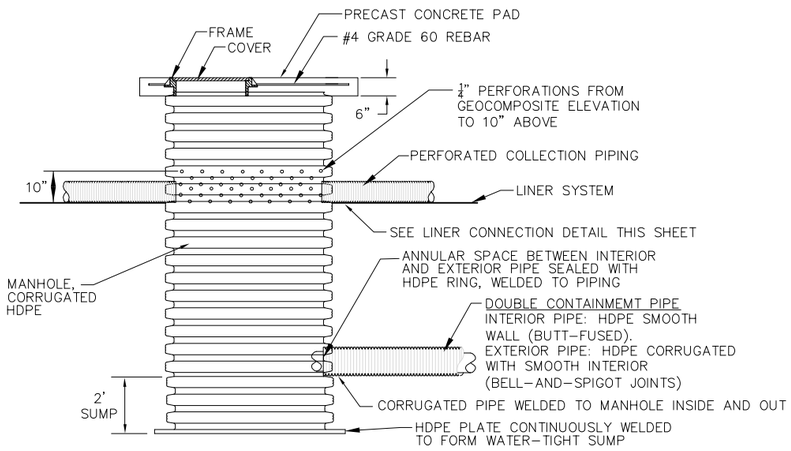

ELEVATION
HDPE MANHOLE DETAIL (MH-A,B,C,D)
NTS

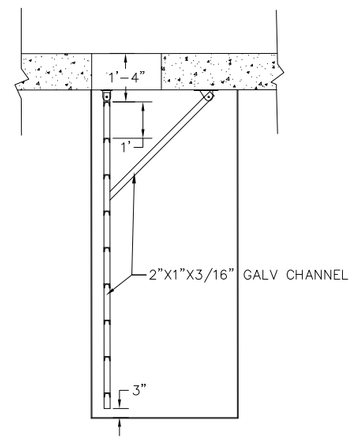

ELEVATION
LADDER DETAIL, HDPE MANHOLES
NTS

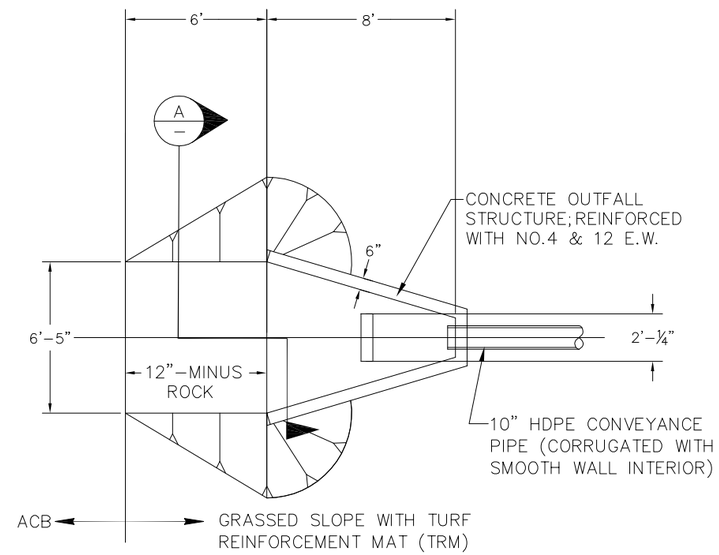

OUTFALL: PLAN

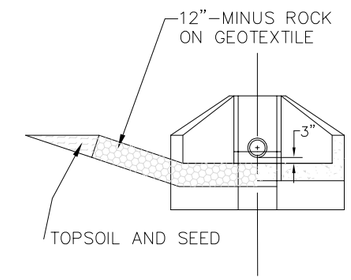

SECTION A

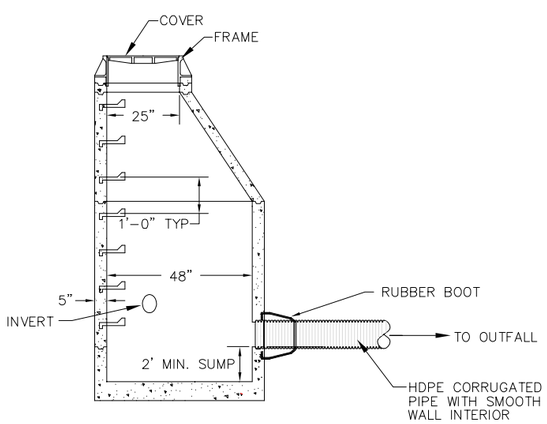

ELEVATION
CONCRETE MANHOLE DETAIL (MH-E)
NTS

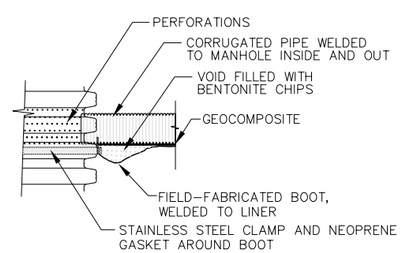

LINER CONNECTION DETAIL
NTS

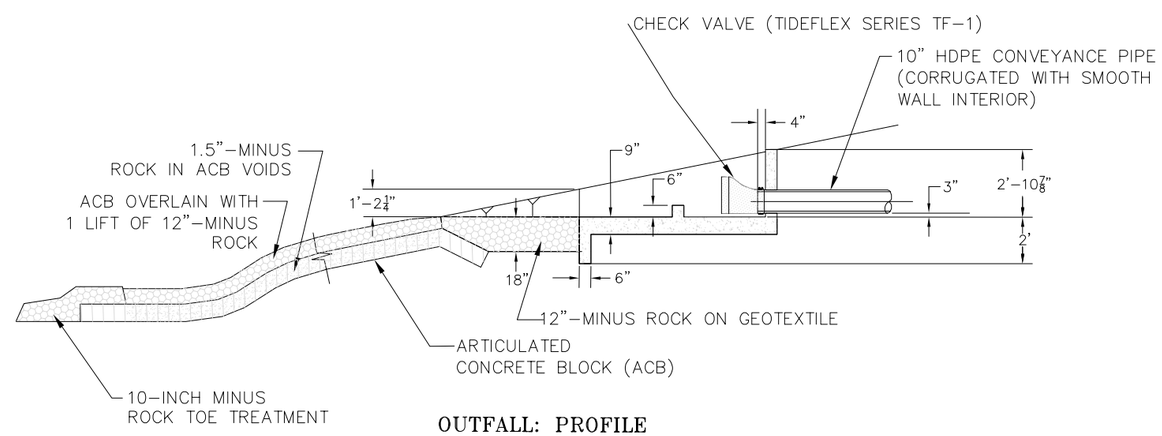

OUTFALL: PROFILE

NO.	DATE	DWN	APP'D	DESCRIPTION

REVISIONS

ecology and environment, inc.
International Specialists in the Environment
Portland, Oregon

DESIGNED BY: C. NANCARROW
CHECKED BY:
DRAWN BY: C. NANCARROW
APPROVED BY: A. WHITMAN

DRAWING 14

UPLAND CAP DETAILS - SHEET 3

Sitewide Record Drawings
McCormick & Baxter Superfund Site
Portland, Oregon

SCALE	DATE ISSUED	C.A.D. FILE NO.
NOTED	01-24-07	SitewideDrawings_Civil3D.dwg

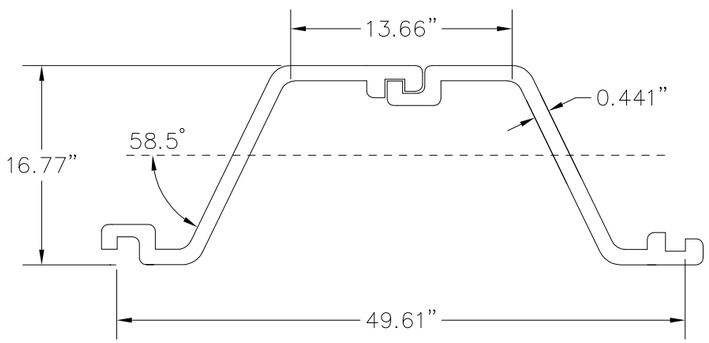

SHEET PILE SECTION
NTS

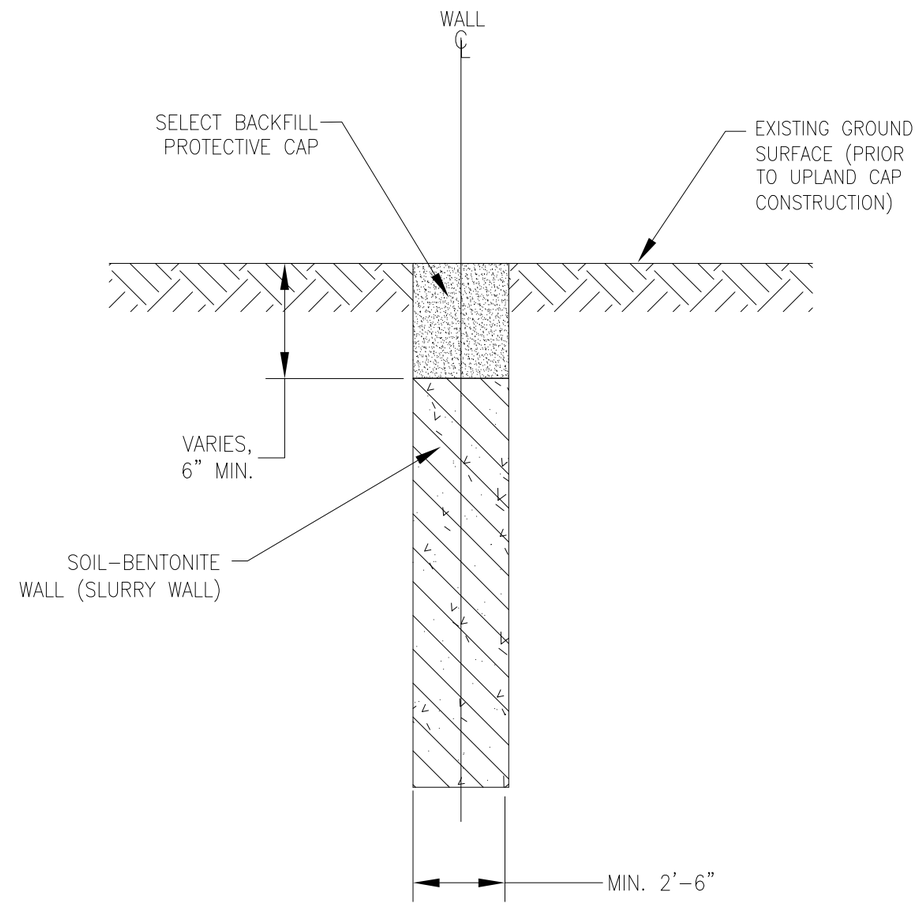

SLURRY WALL SECTION
NTS

NO.	DATE	DWN.	APP'D	DESCRIPTION

REVISIONS

ecology and environment, inc.
International Specialists in the Environment
Portland, Oregon

DESIGNED BY: C. NANCARROW
CHECKED BY:
DRAWN BY: C. NANCARROW
APPROVED BY A. WHITMAN

DRAWING 15

BARRIER WALL DETAILS

Sitewide Record Drawings
McCormick & Baxter Superfund Site
Portland, Oregon

SCALE	DATE ISSUED	C.A.D. FILE NO.
NOTED	01-24-07	SitewideDrawings_Civil3D.dwg