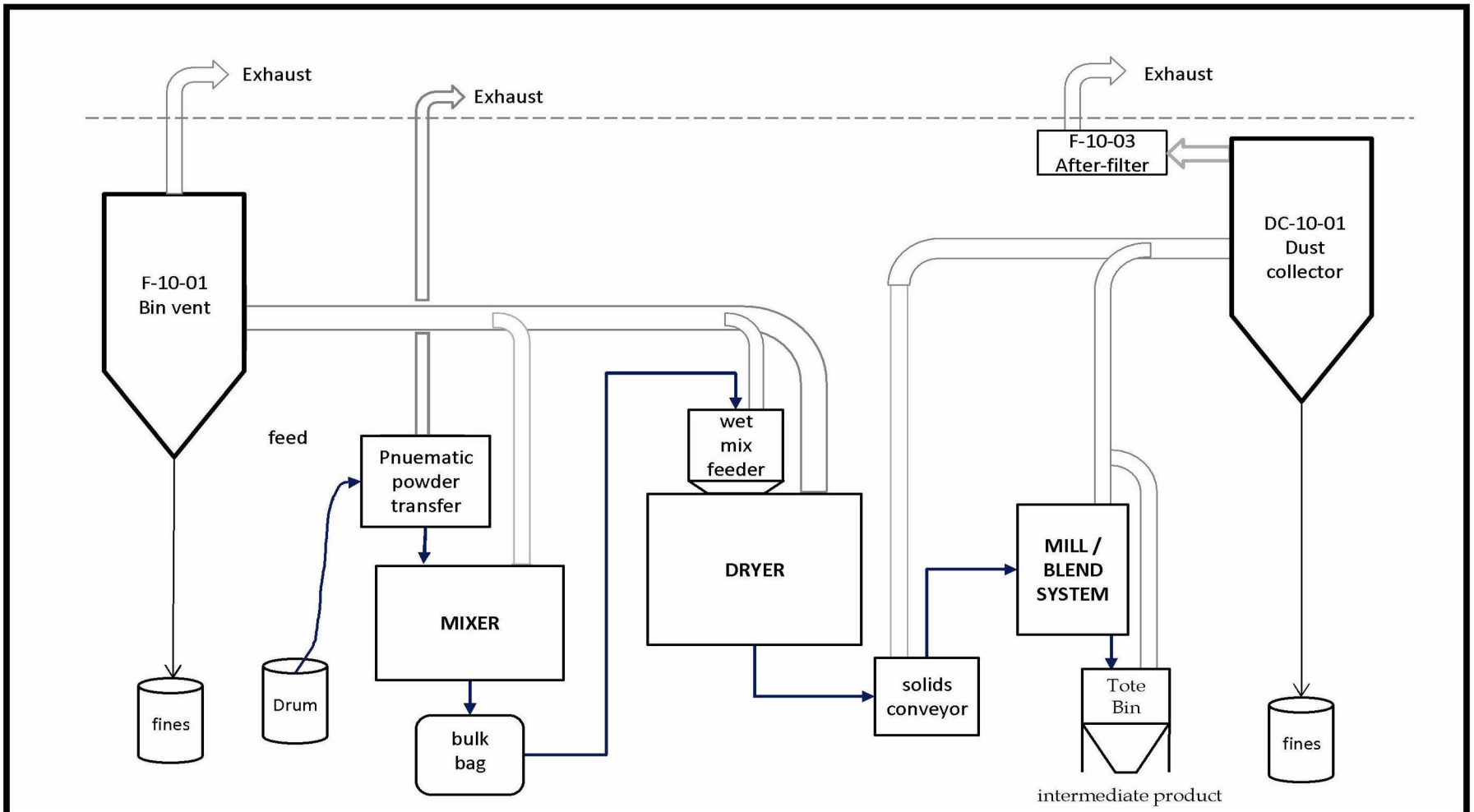

Environmental Resources Management

9825 Kenwood Road, Suite 100
Cincinnati, OH 45242
(513) 830-9030
(513) 830-9031 (fax)
www.erm.com

BASF Corporation
Elyria, OH

Bldg 10 Tableting Precursor
Block Flow Diagram
(P131)

Project No.:	**0221237**
Date:	**10/15/2013**
Drawn By:	**ERM**