UNITED STATES ENVIRONMENTAL PROTECTION AGENCY
REGION IX
75 Hawthorne Street
San Francisco, CA 94105

AUTHORIZATION TO DISCHARGE UNDER THE NATIONAL POLLUTANT DISCHARGE ELIMINATION SYSTEM

NPDES PERMIT NO. NN0000019

In compliance with the provisions of the Clean Water Act ("CWA") (Public Law 92-500, as amended, 33 U.S.C. 1251 et seq.), the following discharger is authorized to discharge from the identified facility at the outfall location(s) specified below, in accordance with the effluent limits, monitoring requirements, and other conditions set forth in this permit:

Discharger Name	Arizona Public Service Company
Discharger Address	P.O. Box 53999 Phoenix, Arizona 85072-3999
Facility Name	APS Four Corners Power Plant
Facility Location Address	20 Miles SW of Farmington San Juan County, New Mexico 87416
Facility Rating	Major

Outfall Number	General Type of Waste Discharged	Outfall Latitude	Outfall Longitude	Receiving Water
001	Cooling Pond Discharge	36°42' 16.5" N	108° 29' 12" W	No-name wash tributary to Chaco River

This permit was issued on:	06/12/18
This permit shall become effective on:	08/01/18
This permit shall expire at midnight on:	07/31/23

In accordance with 40 CFR 122.21(d), the discharger shall submit a new application for a permit at least 180 days before the expiration date of this permit, unless permission for a date no later than the permit expiration date has been granted by the Director.

Signed this 12th day of June, 2018 for the Regional Administrator.

Tomás Torres, Director
Water Division

[This page blank]

Part I. EFFLUENT LIMITS AND MONITORING REQUIREMENTS

A. Effluent Limits and Monitoring Requirements

1. Outfall Number 001 - Cooling Pond Discharge

During the period beginning on the effective date of this permit and lasting through the date of expiration, the Permittee is authorized to discharge from Outfall No. 001

Such discharge shall be limited and monitored by the Permittee as specified below. Samples shall be collected and flow measurements taken at the point where Morgan Lake blowdown water discharge through the existing parshall flume.

Table 1. Effluent Limits and Monitoring Requirements – Outfall Number 001

Parameter	Maximum Allowable Discharge Limits Concentration and Loading			Monitoring Requirements(2)	
	Average Monthly	Maximum Daily	Units	Frequency	Sample Type
Temperature, water deg. centigrade	32.2	35	°C	Continuous	Discrete
Flow rate	(1)	14.7	MGD	Once/Week	Calculated
TDS	(2)	(2)	mg/L	Once/Month	Discrete
Arsenic	(3)	(3)	ug/L	Once/Month	24 Hour- Composite
Boron	(3)	(3)	ug/L	Once/Month	24 Hour- Composite
Cadmium	(3)	(3)	ug/L	Once/Month	24 Hour- Composite
Mercury	(3)	(3)	ug/L	Once/Month	24 Hour- Composite
Nickel	(3)	(3)	ug/L	Once/Month	24 Hour- Composite
Selenium	(3)	(3)	ug/L	Once/Month	24 Hour- Composite
pH	between 6.0 to 9.0			Once/Week	Discrete
Priority Pollutant Scan	(4)			(4)	24 Hour-Composite

NOTES:

1. Report both average weekly/monthly and maximum daily flows
2. During Periods of Discharge. Total Dissolved Solids shall be determined by the "calculation method" (sum of constituents) as described in the 1979 edition of "Techniques of Water Resources Investigations of the United States Geological survey-Methods for Determination of Inorganic Substances in Water and Fluvial Sediments," or any subsequent editions.
3. No limits established. However, the permittee must monitor monthly, or once per discharge, if there is no discharge in a given month, using sufficiently sensitive methods as defined in 40 CFR 136. If the results indicate reasonable potential for exceedance of applicable water quality standard permit may be re-opened and limits

established. If after 12 months of sampling there are no exceedances of the action level the frequency of monitoring may be reduced to twice per year.

4. Within 30 days after the effective date of the permit or within 30 days after the first discharge from Outfall 001, whichever occurs first, the permittee must conduct a PPS using sufficiently sensitive methods as defined in 40 CFR 136. If the results indicate reasonable potential for exceedance of applicable water quality standards the permit may be re-opened to include additional monitoring or appropriate permit limits. The permittee shall also conduct another PPS in the fifth year of the permit cycle prior to applying for a permit renewal.

2. Outfall Number 001 - Narrative Surface Water Quality Standards

Discharge from Outfall 001 shall be free from pollutants in amounts or combinations that, for any duration:

a. Cause injury to, are toxic to, or otherwise adversely affect human health, public safety, or public welfare
b. Cause injury to, are toxic to, or otherwise adversely affect the habitation, growth, or propagation of indigenous aquatic plant and animal communities or any member of these communities; of any desirable non-indigenous member of these communities; of waterfowl accessing the water body; or otherwise adversely affect the physical, chemical, or biological conditions on which these communities and their members depend.
c. Settle to form bottom deposits, including sediments, precipitates and organic materials, that cause injury to, are toxic to, or otherwise adversely affect the habitation, growth, or propagation of indigenous aquatic plant and animal communities or any member of these communities; of any desirable non-indigenous member of these communities; of waterfowl accessing the water body; or otherwise adversely affect the physical, chemical, or biological conditions on which these communities and their members depend.
d. Cause physical, chemical, or biological conditions that promote the habitation, growth, or propagation of undesirable, non-indigenous species of plant or animal life in the water body
e. Cause solids, oil, grease, foam, scum, or any other form of objectionable floating debris on the surface of the water body; may cause a film or iridescent appearance

on the surface of the water body; or may cause a deposit on a shoreline, on a bank, or on aquatic vegetation.

f. Cause objectionable odor in the area of the water body
g. Cause objectionable taste, odor, color, or turbidity in the water body.
h. Cause objectionable taste in edible plant and animal life, including waterfowl, that reside in, on, or adjacent to the water body.
i. Cause the growth of algae or aquatic plants that inhibit or prohibit the habitation, growth, or propagation of other aquatic life or that impair recreational uses.

3. Internal Outfall 01A – Condenser Cooling Water Discharge

1. During the period beginning on the effective date of this permit and lasting through date of expiration, the Permittee is authorized to discharge from Internal Outfall 01A. (latitude: 36°41' 30" N and longitude: 108° 28' 9" W)

a. Such discharge shall be limited and monitored by the Permittee as specified below. Storm water runoff is included in this discharge. Samples shall be collected at the point where condenser cooling water from 4 and 5 is discharged from the circulating water canal to Morgan Lake.

Table 2.1 Effluent Limits and Monitoring Requirements – Outfall Number 01A

Parameter	Maximum Allowable Discharge Limits Concentration and Loading				Monitoring Requirements	
	Average Monthly	Average Weekly	Maximum Daily	Units	Frequency	Sample Type
Flow	-	-	-	MGD	Once/Week	Calculated (1)
TRC(2,3)	-	-	954	lbs/day	Once/Week	Discrete
	-	-	0.2	mg/L	Once/Week	Discrete
Oil & Grease	15.0		20.0	mg/L	Once/Week	Discrete
pH	between 6.0 to 9.0 std. units				Once/Week	Discrete

NOTES:

(1) Based upon pumping records. Report both average and maximum daily flows

(2) As defined in 40 CFR 423.11. Limits for total chlorine are set in accordance with 40 CFR 423.13(b)(1) for once through cooling water. Internal Outfall No. 01A discharge is further restricted by 40 CFR 423.13(2) in that total residual chlorine may not be discharged from any single generating unit for

more than two hours per day. Simultaneous multi-unit chlorination is permitted.

(3) Samples shall be collected during periods of chlorination. Permittee shall report both concentration and mass loading values.

b. Whole Effluent Toxicity Testing:

Effluent toxicity shall be monitored and defined as follows. The Permittee shall only be required to conduct chronic toxicity testing if discharges from Internal Outfall No. 01A are known to occur during at least five (5) consecutive days. If there is continuous discharge from Outfall No. 01A, the Permittee shall conduct toxicity tests on 24-hour composite effluent samples on a quarterly basis. Following a year of quarterly testing, and if there is evidence that there is no reasonable potential for chronic toxicity, the Permittee may apply to EPA for a reduction in toxicity testing frequency using the single, most sensitive species. The most sensitive species is the fish, invertebrate, or alga species which demonstrates the largest percent effect level at the In-stream Waste Concentration (IWC), where:

IWC percent effect level = [(Control mean response − IWC mean response) ÷ Control mean response] × 100.

Chronic toxicity test samples shall be taken at the internal outfall 01A sampling location. A split of each sample shall also be analyzed for all other monitored parameters at the minimum frequency specified for that parameter. See Table 2.1 above.

2. Freshwater Species and Test Methods

Species and short-term test methods for estimating the chronic toxicity of NPDES effluents are found in the fourth edition of *Short-term Methods for Estimating the Chronic Toxicity of Effluents and Receiving Waters to Freshwater Organisms* (EPA/821/R-02/013, 2002; Table IA, 40 CFR 136).

The permittee shall conduct static renewal toxicity tests with the fathead minnow, *Pimephales promelas* (Larval Survival and Growth Test Method 1000.0); the daphnid, *Ceriodaphnia dubia* (Survival and Reproduction Test Method 1002.01); and the green alga, *Selenastrum capricornutum* (also named *Raphidocelis subcapitata*) (Growth Test Method 1003.0).

3. Chronic WET Permit Trigger

For this discharge, the determination of "Pass" or "Fail" from a single-effluent concentration chronic toxicity test at the IWC of 100 percent effluent is determined using the Test of Significant Toxicity (TST) approach described in *National Pollutant Discharge Elimination System Test of Significant Toxicity Implementation Document* (EPA 833-R-10-003, 2010). For any one chronic toxicity test, the chronic WET permit trigger that must be achieved is rejection of the null hypothesis (H_0):

IWC (100 percent effluent) mean response ≤ 0.75 × Control mean response.

A test result that rejects this null hypothesis is reported as "Pass" on the DMR form. A test result that does not reject this null hypothesis is reported as "Fail" on the DMR form. To calculate either "Pass" or "Fail", the Permittee shall follow the instructions in *National Pollutant Discharge Elimination System Test of Significant Toxicity Implementation Document*, Appendix A. If a test result is reported as "Fail", then the Permittee shall follow Section 6 (Accelerated Toxicity Testing and TRE/TIE Process) of this permit.

4. Quality Assurance

   a. Quality assurance measures, instructions, and other recommendations and requirements are found in the chronic test methods manual previously referenced. Additional requirements are specified below.

   b. This discharge is subject to a determination of "Pass" or "Fail" from a single-effluent concentration chronic toxicity test at the IWC (for statistical flowchart and procedures, see *National Pollutant Discharge Elimination System Test of Significant Toxicity Implementation Document*, Appendix A, Figure A-1). The chronic IWC for this discharge is 100 percent effluent.

   d. If organisms are not cultured in-house, then concurrent testing with a reference toxicant shall be conducted. If organisms are cultured in-house, then monthly reference toxicant testing is sufficient. Reference toxicant tests and effluent toxicity tests shall be conducted using the same test conditions (e.g., same test duration, etc.).

   e. All multi-concentration reference toxicant test results must be reviewed and reported according to EPA guidance on the evaluation of concentration-response relationships found in *Method Guidance and Recommendations for Whole Effluent Toxicity (WET) Testing (40 CFR 136)* (EPA 821-B-00-004, 2000).

   f. If either the reference toxicant or effluent toxicity tests do not meet all test acceptability criteria in the test methods manual, then the Permittee shall resample and retest within 14 days.

   g. If the discharged effluent is chlorinated, then chlorine shall not be removed from the effluent sample prior to toxicity testing without written approval by the permitting authority.

   h. pH drift during a toxicity test may contribute to artifactual toxicity when pH-dependent toxicants (e.g., ammonia, metals) are present in the effluent. To determine whether or not pH drift is contributing to artifactual toxicity, the permittee shall conduct three sets of side-by-side toxicity tests in which the pH of one treatment is controlled at the pH of the effluent while the pH of the other treatment is not controlled, as described in Section 11.3.6.1 of *Short-term Methods for Estimating the Chronic Toxicity of Effluents and Receiving Waters to*

Freshwater Organisms (EPA/821/R-02/013, 2002). Toxicity is confirmed to be artifactual and due to pH drift when no toxicity above the chronic WET permit limit or trigger is observed in the treatments controlled at the pH of the effluent. Upon this confirmation and following written approval by the permitting authority, the Permittee may use the procedures outlined in Section 11.3.6.2 of the chronic freshwater test methods manual to control effluent sample pH during the toxicity test.

5. Initial Investigation TRE Work Plan

Within 90 days of the permit effective date, the Permittee shall prepare and submit to the permitting authority a copy of its Initial Investigation Toxicity Reduction Evaluation (TRE) Work Plan (1-2 pages) for review. This plan shall include steps the permittee intends to follow if toxicity is measured above the chronic WET trigger and should include the following, at minimum:

a. A description of the investigation and evaluation techniques that would be used to identify potential causes and sources of toxicity, effluent variability, and treatment system efficiency.

b. A description of methods for maximizing in-house treatment system efficiency, good housekeeping practices, and a list of all chemicals used in operations at the facility.

c. If a Toxicity Identification Evaluation (TIE) is necessary, an indication of who would conduct the TIEs (i.e., an in-house expert or outside contractor).

6. Accelerated Toxicity Testing and TRE/TIE Process

a. If the chronic WET trigger is exceeded and the source of toxicity is known (e.g., a temporary plant upset), then the Permittee shall conduct one additional toxicity test using the same species and test method. This toxicity test shall begin within 14 days of receipt of a test result exceeding the chronic WET permit trigger. If the additional toxicity test does not exceed the chronic WET permit trigger, then the Permittee may return to the regular testing frequency.

b. If the chronic WET trigger is exceeded and the source of toxicity is not known, then the Permittee shall conduct six additional toxicity tests using the same species and test method, approximately every two weeks, over a 12-week period. This testing shall begin within 14 days of receipt of a test result exceeding the chronic WET permit trigger. If none of the additional toxicity tests exceed the chronic WET permit trigger, then the Permittee may return to the regular testing frequency.

c. If one of the additional toxicity tests (in paragraphs 6.a or 6.b) exceeds the chronic WET permit trigger, then, within 14 days of receipt of this test result, the Permittee shall initiate a TRE using, according to the type of treatment facility, EPA manual *Toxicity Reduction Evaluation Guidance for Municipal Wastewater*

Treatment Plants (EPA/833/B-99/002, 1999) or EPA manual *Generalized Methodology for Conducting Industrial Toxicity Reduction Evaluations* (EPA/600/2-88/070, 1989). In conjunction, the Permittee shall develop and implement a Detailed TRE Work Plan which shall include the following: further actions undertaken by the Permittee to investigate, identify, and correct the causes of toxicity; actions the Permittee will take to mitigate the effects of the discharge and prevent the recurrence of toxicity; and a schedule for these actions.

d. The Permittee may initiate a TIE as part of a TRE to identify the causes of toxicity using the same species and test method and, as guidance, EPA manuals: *Methods for Aquatic Toxicity Identification Evaluations: Phase I Toxicity Characterization Procedures* (EPA/600/6-91/003, 1991); *Methods for Aquatic Toxicity Identification Evaluations, Phase II Toxicity Identification Procedures for Samples Exhibiting Acute and Chronic Toxicity* (EPA/600/R-92/080, 1993); *Methods for Aquatic Toxicity Identification Evaluations, Phase III Toxicity Confirmation Procedures for Samples Exhibiting Acute and Chronic Toxicity* (EPA/600/R-92/081, 1993); and *Marine Toxicity Identification Evaluation (TIE): Phase I Guidance Document* (EPA/600/R-96-054, 1996).

7. Reporting of Chronic Toxicity Monitoring Results

a. The Permittee shall report on the DMR for the month in which the toxicity test was conducted: "Pass" or "Fail" (based on the Welch's t-test result) and the calculated "percent mean response at IWC", where:

percent mean response at IWC = ((Control mean response – IWC mean response) ÷ Control mean response)) × 100

b. The Permittee shall submit a full laboratory report for all toxicity testing as an attachment to the DMR for the month in which the toxicity test was conducted. The laboratory report shall contain: the toxicity test results; the dates of sample collection and initiation of each toxicity test; all results for effluent parameters monitored concurrently with the toxicity test(s); and progress reports on TRE/TIE investigations.

c. The Permittee shall notify the permitting authority in writing within 14 days of exceedance of the chronic WET trigger. This notification shall describe actions the Permittee has taken or will take to investigate, identify, and correct the causes of toxicity; the status of actions required by this permit; and schedule for actions not yet completed; or reason(s) that no action has been taken.

8. Permit Reopener for Chronic Toxicity

In accordance with 40 CFR 122 and 124, this permit may be modified to include effluent limitations or permit conditions to address chronic toxicity in the effluent or receiving waterbody, as a result of the discharge; or to implement new, revised, or newly interpreted water quality standards applicable to chronic toxicity.

Table 2.2. Toxicity Limits and Monitoring Requirements – Outfall Number 01A

Parameter	Discharge Limitation	Monitoring Requirements(2)	
	Daily Maximum	Frequency	Sample Type
Chronic Toxicity Testing	(1)	(2)	Composite

NOTES:

(1) There is no discharge limitation for chronic toxicity at this time. Monitoring and reporting for chronic toxicity are specified in Section 1 and 2 below.

(2) See discussion in Section 3.b. above for determination of frequency of Chronic toxicity testing.

4. <u>Internal Outfall 01B – Chemical Metal Cleaning Wastewater</u>

During the period beginning on the effective date of this permit and lasting through date of expiration, the Permittee is authorized to discharge from Internal Outfall No. 01B. (No established discharge location).

Such discharges shall be limited and monitored by the Permittee as specified below. Samples shall be collected prior to mixing with any other waste source stream and/or discharge to the circulating water canal.

Table 3. Effluent Limits and Monitoring Requirements – Outfall Number 01B

Parameter	Maximum Allowable Discharge Limits Concentration and Loading				Monitoring Requirements(2)	
	Average Monthly	Average Weekly	Maximum Daily	Units	Frequency	Sample Type
Flow(1)	-	-	-	MGD	1/Occurrence	Estimated
TSS	-	30	100	mg/L	1/Occurrence	Discrete
Oil & Grease	-	15	20	mg/L	1/Occurrence	Discrete
Iron	-	1.0	1.0	mg/L	1/Occurrence	Discrete
Copper, total	-	1.0	1.0	mg/L	1/Occurrence	Discrete
pH	between 6.0 to 9.0 std. units				1/Occurrence	Discrete

NOTES:

(1) If flow occurs for more than 7 continuous days, the flow must be monitored on a weekly basis.

5. Internal Outfall 01E – Combined Waste Treatment Pond Discharge

During the period beginning with the effective date of this permit and lasting through the date of expiration, the Permittee is authorized to discharge from Internal Outfall No. 01E. (latitude: 36°41' 30" N and longitude: 108° 28' 12" W)

Such discharges shall be limited and monitored by the Permittee as specified below. Samples shall be collected prior to mixing with any other waste source stream and/or release to the circulating water canal.

Table 4. Effluent Limits and Monitoring Requirements – Outfall Number 01E

Parameter	Maximum Allowable Discharge Limits Concentration and Loading				Monitoring Requirements	
	Average Monthly	Average Weekly	Maximum Daily	Units	Frequency	Sample Type
Flow	-	-	-	MGD	Once/Week	Estimated (1)
TSS	-	30	100	mg/L	Once/Week	Discrete
Oil & Grease	15.0		20.0	mg/L	Once/Week	Discrete
pH	between 6.0 to 9.0 std. units				Once/Week	Discrete

NOTES:

(1) Report both average and maximum daily flows.

B. General Discharge Specification

1. **PCB Fluids**

As per 40 CFR 423.13 there shall be no discharge of polychlorinated biphenyl (PCB) fluids from any waste streams.

2. **Surface Seepage**

Surface seepage intercept systems shall be constructed and operated for existing unlined ash ponds. Water collected by these intercept systems shall be returned to the double lined water decant pond. All provisions of the Seepage Monitoring and Management Plan as described below in the Special Conditions Section must be implemented.

3. **Cooling Water Requirements**

The Permittee shall submit all the material required under 40 CFR 122.21 (r) (1)-(8) upon submittal of their next renewal application.

C. General Monitoring and Reporting

1. All monitoring shall be conducted in accordance with 40 CFR 136 test methods, including the use of sufficiently sensitive methods as defined therein. For influent and effluent analyses required in this permit, the Permittee shall utilize 40 CFR 136 test methods with MDLs and MLs that are lower than the effluent limits in this permit and the water quality criteria concentrations in the National Recommended Water Quality Criteria. If all MDLs or MLs are higher than these effluent limits or criteria concentrations, then the Permittee shall utilize the test method with the lowest MDL or ML. In this context, the Permittee shall ensure that the laboratory utilizes a standard calibration where the lowest standard point is equal to or less than the ML. Influent and effluent analyses for metals shall measure "total recoverable metal", except as provided under 40 CFR 122.45(c).

2. As an attachment to the first DMR, the Permittee shall submit, for all parameters with monitoring requirements specified in this permit:

   a. The test method number or title and published MDL or ML,

b. The preparation procedure used by the laboratory,

c. The laboratory's MDL for the test method computed in accordance with Appendix B of 40 CFR 136,

d. The standard deviation (S) from the laboratory's MDL study,

e. The number of replicate analyses (n) used to compute the laboratory's MDL, and

f. The laboratory's lowest calibration standard.

As part of each DMR submittal, the Permittee shall certify that there are no changes to the laboratory's test methods, MDLs, MLs, or calibration standards. If there are any changes to the laboratory's test methods, MDLs, MLs, or calibration standards, these changes shall be summarized in an attachment to the subsequent DMR submittal.

3. The Permittee shall develop a Quality Assurance ("QA") Manual for the field collection and laboratory analysis of samples. The purpose of the QA Manual is to assist in planning for the collection and analysis of samples and explaining data anomalies if they occur. At a minimum, the QA Manual shall include the following:

   a. Identification of project management and a description of the roles and responsibilities of the participants; purpose of sample collection; matrix to be sampled; the analytes or compounds being measured; applicable technical, regulatory, or program-specific action criteria; personnel qualification requirements for collecting samples;

   b. Description of sample collection procedures; equipment used; the type and number of samples to be collected including QA/Quality Control ("QC") samples; preservatives and holding times for the samples (see 40 CFR 136.3); and chain of custody procedures;

   c. Identification of the laboratory used to analyze the samples; provisions for any proficiency demonstration that will be required by the laboratory before or after contract award such as passing a performance evaluation sample; analytical method to be used; MDL and ML to be reported; required QC results to be reported (e.g., matrix spike recoveries, duplicate relative percent differences, blank contamination, laboratory control sample recoveries, surrogate spike recoveries, etc.) and acceptance criteria; and corrective actions to be taken in response to problems identified during QC checks; and

   d. Discussion of how the Permittee will perform data review, report results, and resolve data quality issues and identify limits on the use of data.

4. Throughout all field collection and laboratory analyses of samples, the Permittee shall use the QA/QC procedures documented in their QA Manual. If samples are tested by a contract laboratory, the Permittee shall ensure that the laboratory has a QA Manual on file. A copy of the Permittee's QA Manual shall be retained on the Permittee's

premises and available for review by regulatory authorities upon request. The Permittee shall review its QA Manual annually and revise it, as appropriate.

5. Samples collected during each month of the reporting period must be reported on Discharge Monitoring Report forms, as follows:

   a. For a *maximum daily* permit limit or monitoring requirement when one or more samples are collected during the month, report either:

      The *maximum value*, if the maximum value of all analytical results is greater than or equal to the ML; or
      NODI (Q), if the maximum value of all analytical results is greater than or equal to the laboratory's MDL, but less than the ML; or
      NODI (B), if the maximum value of all analytical results is less than the laboratory's MDL.

   b. For an *average weekly* or *average monthly* permit limit or monitoring requirement when only one sample is collected during the week or month, report either:

      The *maximum value*, if the maximum value of all analytical results is greater than or equal to the ML; or
      NODI (Q), if the maximum value of all analytical results is greater than or equal to the laboratory's MDL, but less than the ML; or
      NODI (B), if the maximum value of all analytical results is less than the laboratory's MDL.

   c. For an *average weekly* or *average monthly* permit limit or monitoring requirement when more than one sample is collected during the week or month, report:

      The *average value* of all analytical results where 0 (zero) is substituted for *NODI (B)* and the laboratory's MDL is substituted for *NODI (Q)*.

6. In addition to information requirements specified under 40 CFR 122.41(j)(3), records of monitoring information shall include: the laboratory which performed the analyses and any comment, case narrative, or summary of results produced by the laboratory. The records should identify and discuss QA/QC analyses performed concurrently during sample analyses and whether project and 40 CFR 136 requirements were met. The summary of results must include information on initial and continuing calibration, surrogate analyses, blanks, duplicates, laboratory control samples, matrix spike and matrix spike duplicate results, and sample condition upon receipt, holding time, and preservation.
7. The permittee shall electronically submit Discharge Monitoring Reports and Biosolids/Sewage Sludge Reports using NetDMR (http://www.epa.gov/netdmr) and NeT (http://www.epa.gov/compliance/national-pollutant-discharge-elimination-system-npdes-electronic-reporting-tool-net-fact), respectively.

8. DMRs shall be submitted by the 28th day of the month following the previous reporting period. For example, under quarterly submission, the three DMR forms for January, February, and March are due on April 28th. Annual and quarterly monitoring must be conducted starting in the first complete quarter or calendar year following permit issuance. Reporting for annual monitoring is due on January 28th of the following year. A DMR must be submitted for the reporting period even if there was not any discharge. If there is no discharge from the facility during the reporting period, the permittee shall submit a DMR indicating no discharge as required.

Part II. STANDARD CONDITIONS

The Permittee shall comply with all EPA Region 9 Standard Conditions included in an attachment to this permit (see Attachment B).

Part III. SPECIAL CONDITIONS

A. Seepage Management and Monitoring Plan

A Seepage Monitoring and Management Plan shall be established and implemented to determine the source of and pollutants in seepages below all ash ponds that receive or received coal combustion residue either currently or in the past. The Plan shall be established and submitted to EPA within 120 days of the issuance of this permit. The Plan shall at a minimum do the following:

1. Identify all seeps within 650 meters down gradient of such impoundments;
2. Conduct sampling (or provide summary of current data if sufficient and valid) of seepages for boron, mercury, nickel, selenium, uranium, zinc and total dissolved solids. Such sampling shall be done using sufficiently sensitive methods as established in 40 CFR 136.
3. Provide information about number of flows observed and range of flows observed
4. Provide information about exceedances of any human health, livestock, or chronic or acute aquatic life standards as established in the 2007 NNWQS in the samples collected for analysis.

B. Permit Reopener(s)

In accordance with 40 CFR 122 and 124, this permit may be modified by EPA to include effluent limits, monitoring, or other conditions to implement new regulations, including EPA-approved water quality standards; or to address new information indicating the presence of effluent toxicity or the reasonable potential for the discharge to cause or contribute to exceedances of water quality standards.

C. Twenty-four Hour Reporting of Noncompliance

The Permittee shall report any noncompliance which may endanger human health or the environment. The Permittee is required to provide an oral report by directly speaking with an EPA staff person within 24 hours from the time the Permittee becomes aware of the circumstances. If the Permittee is unsuccessful in reaching a staff person, the Permittee shall provide notification by 9 a.m. on the first business day following the noncompliance. The Permittee shall notify EPA at the following telephone numbers:

U.S. Environmental Protection Agency
CWA Compliance Office (WTR-7)
(415) 972-3577

The Permittee shall follow up with a written submission within five days of the time the Permittee becomes aware of the circumstances. The written submission shall contain a description of the noncompliance and its cause; the period of noncompliance, including exact dates and times; and if the noncompliance has not been corrected, the anticipated time it is expected to continue; and steps taken or planned to reduce, eliminate, and prevent reoccurrence of the noncompliance.

1. The following shall be included as information which must be reported within 24 hours under this paragraph.

    a. Any unanticipated bypass which exceeds any effluent limit in the permit (see 40 CFR 122.44(g)).

    b. Any upset which exceeds any effluent limit in the permit.

    c. Violation of a maximum daily discharge limit for any of the pollutants listed by the director in the permit to be reported within 24 hours (see 40 CFR 122.44(g)).

2. The Director may waive the written report on a case-by-case basis for reports required under paragraph B.2, if the oral report has been received within 24 hours.

Part IV. ATTACHMENTS

Attachment A: Definitions

1. "Average monthly discharge limitation" means the highest allowable average of "daily discharges" over a calendar month, calculated as the sum of all "daily discharges" measured during a calendar month divided by the number of "daily discharges" measured during that month.

2. "Average weekly discharge limitation" means the highest allowable average of "daily discharges" over a calendar week, calculated as the sum of all "daily discharges" measured during a calendar week divided by the number of "daily discharges" measured during that week.

3. "Best Management Practices" or "BMPs" are schedules of activities, prohibitions of practices, maintenance procedures, and other physical, structural, and/or managerial practices to prevent or reduce the pollution of waters of the U.S. BMPs include treatment systems, operating procedures, and practices to control: plant site runoff, spillage or leaks, sludge or waste disposal, or drainage from raw material storage. BMPs may further be characterized as operational, source control, erosion and sediment control, and treatment BMPs.

4. A "composite" sample means a time-proportioned mixture of not less than eight discrete aliquots obtained at equal time intervals (e.g., 24-hour composite means a minimum of eight samples collected every three hours). The volume of each aliquot shall be directly proportional to the discharge flow rate at the time of sampling, but not less than 100 ml. Sample collection, preservation, and handling shall be performed as described in the most recent edition of 40 CFR 136.3, Table II. Where collection, preservation, and handling procedures are not outlined in 40 CFR 136.3, procedures outlined in the 18th edition of Standard Methods for the Examination of Water and Wastewater shall be used.

5. A "daily discharge" means the "discharge of a pollutant" measured during a calendar day or any 24-hour period that reasonably represents the calendar day for purposes of sampling. For pollutants with limitations expressed in units of mass, the "daily discharge" is calculated as the total mass of the pollutant discharged over the day. For pollutants with limitations expressed in other units of measurement, the "daily discharge" is calculated as the average measurement of the pollutant over the day.

6. A "daily maximum allowable effluent limitation" means the highest allowable "daily discharge."

7. A "DMR" is a "Discharge Monitoring Report" that is an EPA uniform national form, including any subsequent additions, revisions, or modifications for reporting of self-monitoring results by the permittee.

8. A "grab" sample is a single sample collected at a particular time and place that represents the composition of the discharge only at that time and place. Sample collection,

preservation, and handling shall be performed as described in the most recent edition of 40 CFR 136.3, Table II. Where collection, preservation, and handling procedures are not outlined in 40 CFR 136.3, procedures outlined in the 18th edition of Standard Methods for the Examination of Water and Wastewater shall be used.

9. The "method detection limit" or "MDL" is the minimum concentration of an analyte that can be detected with 99% confidence that the analyte concentration is distinguishable from the method blank results, as defined by a specific laboratory method in 40 CFR 136. The procedure for determination of a laboratory MDL is in 40 CFR 136, Appendix B.

10. The "minimum level" or "ML" is the concentration at which the entire analytical system must give a recognizable signal and acceptable calibration point. The ML is the concentration in a sample that is equivalent to the concentration of the lowest calibration standard analyzed in a specific analytical procedure, assuming that all the method-specific sample weights, volumes, and processing steps have been followed (as defined in EPA's draft National Guidance for the Permitting, Monitoring, and Enforcement of Water Quality-Based Effluent Limitations Set Below Analytical Detection/Quantitative Levels, March 22, 1994). If a published method-specific ML is not available, then an interim ML shall be calculated. The interim ML is equal to 3.18 times the published method-specific MDL rounded to the nearest multiple of 1, 2, 5, 10, 20, 50, etc. (When neither an ML nor MDL are available under 40 CFR 136, an interim ML should be calculated by multiplying the best estimate of detection by a factor of 3.18; when a range of detection is given, the lower end value of the range of detection should be used to calculate the ML.) At this point in the calculation, a different procedure is used for metals, than non-metals:

    a. For metals, due to laboratory calibration practices, calculated MLs may be rounded to the nearest whole number.

    b. For non-metals, because analytical instruments are generally calibrated using the ML as the lowest calibration standard, the calculated ML is then rounded to the nearest multiple of (1, 2, or 5) x 10n, where n is zero or an integer. (For example, if an MDL is 2.5 μg/l, then the calculated ML is: 2.5 μg/l x 3.18 = 7.95 μg/l. The multiple of (1, 2, or 5) x 10n nearest to 7.95 is 1 x 101 = 10 μg/l, so the calculated ML, rounded to the nearest whole number, is 10 μg/l.)

11. A "NODI(B)" means that the concentration of the pollutant in a sample is not detected. NODI(B) is reported when a sample result is less than the laboratory's MDL.

12. A "NODI(Q)" means that the concentration of the pollutant in a sample is detected but not quantified. NODI(Q) is reported when a sample result is greater than or equal to the laboratory's MDL, but less than the ML.

Attachment B: Standard Permit Condition

The permittee shall comply with all EPA Region 9 Standard Conditions below.

A. All NPDES Permits

In accordance with 40 CFR 122.41, the following conditions apply to all NPDES permits and are expressly incorporated into this permit.

1. Duty to comply; at 40 CFR 122.41(a).

   The permittee must comply with all conditions of this permit. Any permit noncompliance constitutes a violation of the CWA and is grounds for enforcement action; for permit termination, revocation and reissuance, or modification; or denial of a permit renewal application.

   a. The permittee shall comply with effluent standards or prohibitions established under section 307(a) of the CWA for toxic pollutants and with standards for sewage sludge use or disposal established under 405(d) of the CWA within the time provided in the regulations that established these standards or prohibitions or standards for sewage sludge use or disposal, even if the permit has not yet been modified to incorporate the requirement.

   b. The CWA provides that any person who violates section 301, 302, 306, 307, 308, 318 or 405 of the Act, or any permit condition or limitation implementing any such sections in a permit issued under section 402, or any requirement imposed in a pretreatment program approved under sections 402(a)(3) or 402(b)(8) of the Act, is subject to a civil penalty not to exceed $25,000 per day for each violation. The CWA provides that any person who *negligently* violates sections 301, 302, 306, 307, 308, 318, or 405 of the Act, or any condition or limitation implementing any of such sections in a permit issued under section 402 of the Act, or any requirement imposed in a pretreatment program approved under 402(a)(3) or 402(b)(8) of the Act, is subject to criminal penalties of $2,500 to $25,000 per day of violation, or imprisonment of not more than 1 year, or both. In the case of a second or subsequent conviction for a negligent violation, a person shall be subject to criminal penalties of not more than $50,000 per day of violation, or by imprisonment of not more than 2 years, or both. Any person who *knowingly* violates such sections, or such conditions or limitations is subject to criminal penalties of $5,000 to $50,000 per day of violation, or imprisonment for not more than 3 years, or both. In the case of a second or subsequent conviction for a knowing violation, a person shall be subject to criminal penalties of not more than $100,000 per day of violation, or imprisonment of not more than 6 years, or both. Any person who knowingly violates section 301, 302, 303, 306, 307, 308, 318 or 405 of the Act, or any permit condition or limitation implementing any of such sections in a permit issued under section 402 of the Act, and who knows at that

time that he thereby places another person in imminent danger of death or serious bodily injury, shall, upon conviction, be subject to a fine of note more than $250,000 or imprisonment of not more than 15 years, or both. In the case of second or subsequent conviction for a knowing endangerment violation, a person shall be subject to a fine of not more than $500,000 or by imprisonment of not more than 30 years, or both. An organization, such as defined in section 309(c)(3)(B)(iii) of the CWA, shall, upon conviction of violating the imminent danger provision, be subject to a fine of not more than $1,000,000 and can be fined up to $2,000,000 for second or subsequent convictions.

c. Any person may be assessed an administrative penalty by the Administrator for violating section 301, 302, 306, 307, 308, 318 or 405 of this Act, or any permit condition or limitation implementing any such sections in a permit issued under section 402 of this Act. Administrative penalties for Class I violations are not to exceed $10,000 per violation, with the maximum amount of any Class I penalty assessed not to exceed $25,000. Penalties for Class II violations are not to exceed $10,000 per day for each day during which the violation continues, with the maximum amount of any Class II penalty not to exceed $125,000.

2. Duty to reapply; at 40 CFR 122.41(b).

If the permittee wishes to continue an activity regulated by this permit after the expiration date of this permit, the permittee must apply for and obtain a new permit. Any permittee with a currently effective permit shall submit a new application at least 180 days before the expiration date of the existing permit, unless permission for a later date has been granted by the Director.

3. Need to halt or reduce activity not a defense; at 40 CFR 122.41(c).

It shall not be a defense for a permittee in an enforcement action that it would have been necessary to halt or reduce the permitted activity in order to maintain compliance with the conditions of this permit.

4. Duty to mitigate; at 40 CFR 122.41(d).

The permittee shall take all reasonable steps to minimize or prevent any discharge or sludge use or disposal in violation of this permit which has a reasonable likelihood of adversely affecting human health or the environment.

5. Proper operation and maintenance; at 40 CFR 122.41(e).

The permittee shall at all times properly operate and maintain all facilities and systems of treatment and control (and related appurtenances) which are installed or used by the permittee to achieve compliance with the conditions of this permit. Proper operation and maintenance also includes adequate laboratory controls and appropriate quality assurance procedures. This provision requires the operation of backup or auxiliary facilities or similar systems which are installed by a permittee

only when the operation is necessary to achieve compliance with the conditions of the permit.

6. Permit actions; at 40 CFR 122.41(f).

   This permit may be modified, revoked and reissued, or terminated for cause. The filing of a request by the permittee for a permit modification, revocation and reissuance, or termination, or a notification of planned changes or anticipated noncompliance does not stay any permit condition.

7. Property rights; at 40 CFR 122.41(g).

   This permit does not convey any property rights of any sort, or any exclusive privilege.

8. Duty to provide information; at 40 CFR 122.41(h).

   The permittee shall furnish to the Director, within a reasonable time, any information which the Director may request to determine whether cause exists for modifying, revoking and reissuing, or terminating this permit or to determine compliance with this permit. The permittee shall also furnish to the Director upon request, copies of records required to be kept by this permit.

9. Inspection and entry; at 40 CFR 122.41(i).

   The permittee shall allow the Director, or an authorized representative (including an authorized contractor acting as a representative of the Administrator), upon presentation of credentials and other documents as may be required by law, to:

   a. Enter upon the permittee's premises where a regulated facility or activity is located or conducted, or where records must be kept under the conditions of this permit;

   b. Have access to and copy, at reasonable times, any records that must be kept under the conditions of this permit;

   c. Inspect at reasonable times any facilities, equipment (including monitoring and control equipment), practices, or operations regulated or required under this permit; and

   d. Sample or monitor at reasonable times, for the purposes of assuring permit compliance or as otherwise authorized by the CWA, any substances or parameters at any location.

10. Monitoring and records; at 40 CFR 122.41(j).

    a. Samples and measurements taken for the purpose of monitoring shall be representative of the monitored activity.

b. Except for records of monitoring information required by this permit related to the permittee's sewage sludge use and disposal activities, which shall be retained for a period of at least five years (or longer as required by 40 CFR part 503), the permittee shall retain records of all monitoring information, including all calibration and maintenance records and all original strip chart recordings for continuous monitoring instrumentation, copies of all reports required by this permit, and records of all data used to complete the application for this permit, for a period of at least 3 years from the date of the sample measurement, report or application. This period may be extended by request of the Director at any time.

c. Records of monitoring information shall include:

(i) The date, exact place, and time of sampling or measurements;

(ii) The individual(s) who performed the sampling or measurements;

(iii)The date(s) analyses were performed

(iv)The individuals(s) who performed the analyses;

(v) The analytical techniques or methods used; and

(vi)The results of such analyses.

d. Monitoring must be conducted according to test procedures approved under 40 CFR Part 136 or, in the case of sludge use or disposal, approved under 40 CFR Part 136 unless otherwise specified in 40 CFR part 503, unless other test procedures have been specified in the permit.

e. The CWA provides that any person who falsifies, tampers with, or knowingly renders inaccurate any monitoring device or method required to be maintained under this permit shall, upon conviction, be punished by a fine of not more than $10,000, or by imprisonment for not more than 2 years, or both. If a conviction of a person is for a violation committed after a first conviction of such person under this paragraph, punishment is a fine of not more than $20,000 per day of violation, or by imprisonment of not more than 4 years, or both.

11. Signatory requirement; at 40 CFR 122.41(k).

a. All applications, reports, or information submitted to the Director shall be signed and certified. (See 40 CFR 122.22.) All permit applications shall be signed as follows:

(1) For a corporation. By a responsible corporate officer. For the purpose of this section, a responsible corporate officer means: (i) A president, secretary, treasurer, or vice-president of the corporation in charge of a principal business function, or any other person who performs similar policy- or decision-making functions for the corporation, or (ii) the

manager of one or more manufacturing, production, or operating facilities, provided, the manager is authorized to make management decisions which govern the operation of the regulated facility including having the explicit or implicit duty of making major capital investment recommendations, and initiating and directing other comprehensive measures to assure long term environmental compliance with environmental laws and regulations; the manager can ensure that the necessary systems are established or actions taken to gather complete and accurate information for permit application requirements; and where authority to sign documents has been assigned or delegated to the manager in accordance with corporate procedures.

Note: EPA does not require specific assignments or delegations of authority to responsible corporate officers identified in 40 CFR 122.22(a)(1)(i). The Agency will presume that these responsible corporate officers have the requisite authority to sign permit applications unless the corporation has notified the Director to the contrary. Corporate procedures governing authority to sign permit applications may provide for assignment or delegation to applicable corporate positions under 40 CFR 122.22(a)(1)(ii) rather than to specific individuals.

(2) For a partnership or sole proprietorship. By a general partner or the proprietor, respectively; or

(3) For a municipality, State, Federal, or other public agency. By either a principal executive officer or ranking elected official. For purposes of this section, a principal executive officer of a Federal agency includes: (i) The chief executive officer of the agency, or (ii) a senior executive officer having responsibility for the overall operations of a principal geographic unit of the agency (e.g., Regional Administrators of EPA).

b. All reports required by permits, and other information requested by the Director shall be signed by a person described in paragraph (a) of this section, or by a duly authorized representative of that person. A person is a duly authorized representative only if:

(1) The authorization is made in writing by a person described in paragraph (a) of this section;

(2) The authorization specifies either an individual or a position having responsibility for the overall operation of the regulated facility or activity such as the position of plant manager, operator of a well or well field, superintendent, position of equivalent responsibility, or an individual or position having overall responsibility for environmental matters of the company, (A duly authorized representative may thus be either a named individual or any individual occupying a named position.) and,

(3) The written authorization is submitted to the Director.

c. Changes to authorization. If an authorization under paragraph (b) of this section is no longer accurate because a different individual or position has responsibility for the overall operation of the facility, a new authorization satisfying the requirements of paragraph (b) of this section must be submitted to the Director prior to or together with any reports, information, or applications to be signed by an authorized representative.

d. Certification. Any person signing a document under paragraph (a) or (b) of this section shall make the following certification:

"I certify under penalty of law that this document and all attachments were prepared under my direction or supervision in accordance with a system designed to assure that qualified personnel properly gather and evaluate the information submitted. Based on my inquiry of the person or persons who manage the system, or those persons directly responsible for gathering the information, the information submitted is, to the best of my knowledge and belief, true, accurate, and complete. I am aware that there are significant penalties for submitting false information, including the possibility of fine and imprisonment for knowing violations."

e. The CWA provides that any person who knowingly makes any false statement, representation, or certification in any record or other document submitted or required to be maintained under this permit, including monitoring reports or reports of compliance or non-compliance shall, upon conviction, be punished by a fine of not more than $10,000 per violation, or by imprisonment for not more than 6 months per violation, or by both.

12. Reporting requirements; at 40 CFR 122.41(l).

a. Planned changes. The permittee shall give notice to the Director as soon as possible of any planned physical alternations or additions to the permitted facility. Notice is required only when:

(i) The alteration or addition to a permitted facility may meet one of the criteria for determining whether a facility is a new source in 40 CFR 122.29(b); or

(ii) The alteration or addition could significantly change the nature or increase the quantity of pollutants discharged. This notification applies to pollutants which are subject neither to effluent limitations in the permit, nor to notification requirements under 40 CFR 122.42(a)(1).

(iii) The alteration or addition results in a significant change in the permittee's sludge use or disposal practices, an such alteration, addition, or change may justify the application of permit conditions that are different from or absent in the existing permit, including notification of additional use or

disposal sites not reported during the permit application process or not reported pursuant to an approved land application plan;

b. Anticipated noncompliance. The permittee shall give advance notice to the Director of any planned changes in the permitted facility or activity which may result in noncompliance with permit requirements.

c. Transfers. This permit is not transferable to any person except after notice to the Director. The Director may require modification or revocation and reissuance of the permit to change the name of the permittee and incorporate such other requirements as may be necessary under the CWA. (See 40 CFR 122.61; in some cases, modification or revocation and reissuance is mandatory.)

   a. Transfers by modification. Except as provided in paragraph (b) of this section, a permit may be transferred by the permittee to a new owner or operator only if the permit has been modified or revoked and reissued (under 40 CFR 122.62(b)(2)), or a minor modification made (under 40 CFR 122.63(d)), to identify the new permittee and incorporate such other requirements as may be necessary under CWA.

   b. Automatic transfers. As an alternative to transfers under paragraph (a) of this section, any NPDES permit may be automatically transferred to a new permittee if:

      (1) The current permittee notifies the Director at least 30 days in advance of the proposed transfer date in paragraph (b)(2) of this section;

      (2) The notice includes a written agreement between the existing and new permittees containing a specific date for transfer of permit responsibility, coverage, and liability between them; and

      (3) The Director does not notify the existing permittee and the proposed new permittee of his or her intent to modify or revoke and reissue the permit. A modification under this subparagraph may also be a minor modification under 40 CFR 122.63. If this notice is not received, the transfer is effective on the date specified in the agreement mentioned in paragraph (b)(2) of this section.

d. Monitoring reports. Monitoring results shall be reported at the intervals specified elsewhere in this permit.

   (i) Monitoring results must be reported on a Discharge Monitoring Report (DMR) or forms provided or specified by the Director for reporting results of monitoring of sludge use or disposal practices. As of December 21, 2016 all reports and forms submitted in compliance with this section must be submitted electronically by the permittee to the Director or initial recipient, as defined in 40 CFR 127.2(b), in compliance with this section

and 40 CFR 3 (including, in all cases, subpart D to part 3), 40 CFR 122.22, and 40 CFR 127.

(ii) If the permittee monitors any pollutant more frequently than required by the permit using test procedures approved under 40 CFR part 136 or, in the case of sludge use or disposal, approved under 40 CFR part 503, or as specified in the permit, the results of such monitoring shall be included in the calculation and reporting of the data submitted in the DMR or sludge reporting form specified by the Director.

(iii)Calculations for all limitations which require averaging of measurements shall utilize an arithmetic mean unless otherwise specified by the Director in the permit.

e. Compliance schedules. Reports of compliance or noncompliance with, or any progress reports on, interim and final requirements contained in any compliance schedule of this permit shall be submitted no later than 14 days following each schedule date.

f. Twenty-four hour reporting.

(i) The permittee shall report any noncompliance which may endanger health or the environment. Any information shall be provided orally within 24 hours from the time the permittee becomes aware of the circumstances. A report shall also be provided within 5 days of the time the permittee becomes aware of the circumstances. The report shall contain a description of the noncompliance and its cause; the period of noncompliance, including exact dates and times), and if the noncompliance has not been corrected, the anticipated time it is expected to continue; and steps taken or planned to reduce, eliminate, and prevent reoccurrence of the noncompliance. For noncompliance events related to combined sewer overflows, sanitary sewer overflows, or bypass events, these reports must include the data described above (with the exception of time of discovery) as well as the type of event (combined sewer overflows, sanitary sewer overflows, or bypass events), type of sewer overflow structure (e.g., manhole, combine sewer overflow outfall), discharge volumes untreated by the treatment works treating domestic sewage, types of human health and environmental impacts of the sewer overflow event, and whether the noncompliance was related to wet weather. As of December 21, 2020 all reports related to combined sewer overflows, sanitary sewer overflows, or bypass events submitted in compliance with this section must be submitted electronically by the permittee to the Director or initial recipient, as defined in 40 CFR 127.2(b), in compliance with this section and 40 CFR 3 (including, in all cases, subpart D to part 3), 40 CFR 122.22, and 40 CFR part 127.

(ii) The following shall be included as information which must be reported within 24 hours under this paragraph.

(A) Any unanticipated bypass which exceeds any effluent limitation in the permit. (See 40 CFR 122.41(g).)

(B) Any upset which exceeds any effluent limitation in the permit.

(C) Violation of a maximum daily discharge limitation for any of the pollutants listed by the Director in the permit to be reported within 24 hours. (See 40 CFR 122.44(g).)

(iii) The Director may waive the written report on a case-by-case basis for reports under 40 CFR 122.41(l)(6)(ii) of this section if the oral report has been received within 24 hours.

g. Other noncompliance. The permittee shall report all instances of noncompliance not reported under 40 CFR 122.41(l)(4), (5), and (6) of this section, at the time monitoring reports are submitted. The reports shall contain the information listed in paragraph (l)(6) of this section.

h. Other information. Where the permittee becomes aware that it failed to submit any relevant facts in a permit application, or submitted incorrect information in a permit application or in any report to the Director, it shall promptly submit such facts or information.

13. Bypass; at 40 CFR 122.41(m).

a. Definitions.

(i) "Bypass" means the intentional diversion of waste streams from any portion of a treatment facility.

(ii) "Severe property damage" means substantial physical damage to property, damage to the treatment facilities which causes them to become inoperable, or substantial and permanent loss of natural resources which can reasonably be expected to occur in the absence of a bypass. Severe property damage does not mean economic loss caused by delays in production.

b. Bypass not exceeding limitations. The permittee may allow any bypass to occur which does not cause effluent limitations to be exceeded, but only if it also is for essential maintenance to assure efficient operation. These bypasses are not subject to the provisions of paragraphs 40 CFR 122.41(m)(3) and (m)(4) of this section.

c. Notice.

(i) Anticipated bypass. If the permittee knows in advance of the need for a bypass, it shall submit prior notice, if possible at least ten days before the date of the bypass.

(ii) Unanticipated bypass. The permittee shall submit notice of an unanticipated bypass as required in paragraph (l)(6) of this section (24-hour notice).

(iii)As of December 21, 2020 all notices submitted in compliance with this section must be submitted electronically by the permittee to the Director or initial recipient, as defined in 40 CFR 127.2(b), in compliance with this section and 40 CFR part 3(including, in all cases, subpart D to part 3), 40 CFR 122.22, and 40 CFR part 127. Part 127 is not intended to undo existing requirements for electronic reporting. Prior to this date, and independent of part 127, permittees may be required to report electronically if specified by a particular permit or if required to do so by state law.

d. Prohibition of bypass.

(1) Bypass is prohibited, and the Director may take enforcement action against a permittee for bypass, unless:

(A) Bypass was unavoidable to prevent loss of life, personal injury, or severe property damage;

(B) There were no feasible alternatives to the bypass, such as the use of auxiliary treatment facilities, retention of untreated wastes, or maintenance during normal periods of equipment downtime. This condition is not satisfied if adequate back-up equipment should have been installed in the exercise of reasonable engineering judgment to prevent a bypass which occurred during normal periods of equipment downtime or preventative maintenance; and

(C) The permittee submitted notices as required under paragraph (m)(3) of this section.

(2) The Director may approve an anticipated bypass, after considering its adverse effects, if the Director determines that it will meet the three conditions listed above in paragraph (m)(4)(i) of this section.

14. Upset; at 40 CFR 122.41(n).

a. Definition. "Upset" means an exceptional incident in which there is unintentional and temporary noncompliance with technology based permit effluent limitations because of factors beyond the reasonable control of the permittee. An upset does

not include noncompliance to the extent cause by operational error, improperly designed treatment facilities, inadequate treatment facilities, lack of preventative maintenance, or careless or improper operation.

b. Effect of an upset. An upset constitutes an affirmative defense to an action brought for noncompliance with such technology based permit effluent limitations if the requirements of paragraph (n)(3) of this section are met. No determination made during administrative review of claims that noncompliance was caused by upset, and before an action for noncompliance, is final administrative action subject to judicial review.

c. Conditions necessary for a demonstration of upset. A permittee who wishes to establish the affirmative defense of upset shall demonstrate, through properly signed, contemporaneous operating logs, or other relevant evidence that:

(i) An upset occurred and that the permittee can identify the cause(s) of the upset;

(ii) The permitted facility was at the time being properly operated; and

(iii) The permittee submitted notice of the upset as required in paragraph (l)(6)(ii)(B) of this section (24 hour notice).

(iv) The permittee complied with any remedial measures required under paragraph (d) of this section.

d. Burden of proof. In any enforcement proceeding the permittee seeking to establish the occurrence of an upset has the burden of proof.

15. Reopener Clause; at 40 CFR 122.44(c).

For any permit issued to a treatment works treating domestic sewage (including "sludge-only facilities"), the Director shall include a reopener clause to incorporate any applicable standard for sewage sludge use or disposal promulgated under section 405(d) of the CWA. The Director may promptly modify or revoke and reissue any permit containing the reopener clause required by this paragraph if the standard for sewage sludge use or disposal is more stringent than any requirements for sludge use or disposal in the permit, or controls a pollutant or practice not limited in the permit.

16. Minor modifications of permits; at 40 CFR 122.63.

Upon the consent of the permittee, the Director may modify a permit to make the corrections or allowances for changes in the permitted activity listed in this section, without following the procedures of 40 CFR 124. Any permit modification not processed as a minor modification under this section must be made for cause and with 40 CFR 124 draft permit and public notice as required in 40 CFR 122.62. Minor modifications may only:

a. Correct typographical errors;

b. Require more frequent monitoring or reporting by the permittee;

c. Change an interim compliance date in a schedule of compliance, provided the new date is not more than 120 days after the date specified in the existing permit and does not interfere with attainment of the final compliance date requirement; or

d. Allow for a change in ownership or operational control of a facility where the Director determines that no other change in the permit is necessary, provided that a written agreement containing a specific date for transfer of permit responsibility, coverage, and liability between the current and new permittees has been submitted to the Director.

e. Change the construction schedule for a discharger which is a new source. No such change shall affect a discharger's obligation to have all pollution control equipment installed and in operation prior to discharge under 40 CFR 122.29.

f. Delete a point source outfall when the discharge from that outfall is terminated and does not result in discharge of pollutants from other outfalls except in accordance with permit limits.

g. Incorporate conditions of a POTW pretreatment program that has been approved in accordance with the procedures in 40 CFR 403.11 (or a modification thereto that has been approved in accordance with the procedures in 40 CFR 403.18) as enforceable conditions of the POTW's permits.

17. Termination of permits; at 40 CFR 122.64.

a. The following are causes for terminating a permit during its term, or for denying a permit renewal application:

(1) Noncompliance by the permittee with any conditions of the permit;

(2) The permittee's failure in the application or during the permit issuance process to disclose fully all relevant facts, or the permittee's misrepresentation of any relevant facts at any time;

(3) A determination that the permitted activity endangers human health or the environment and can only be regulated to acceptable levels by permit modification or termination; or

(4) A change in any condition that requires either a temporary or permanent reduction or elimination of any discharge or sludge use or disposal practice controlled by the permit (for example, plant closure or termination of discharge by connection to a POTW).

18. Availability of Reports; pursuant to CWA section 308

Except for data determined to be confidential under 40 CFR 2, all reports prepared in accordance with the terms of this permit shall be available for public inspection at the offices of the Regional Administrator. As required by the CWA, permit applications, permits, and effluent data shall not be considered confidential.

19. Removed Substances; pursuant to CWA section 301

Solids, sludges, filter backwash, or other pollutants removed in the course of treatment or control of wastewaters shall be disposed of in a manner such as to prevent any pollutant from such materials entering waters of the U.S.

20. Severability; pursuant to CWA section 512

The provisions of this permit are severable, and if any provision of this permit, or the application of any provision of this permit to any circumstance, is held invalid, the application of such provision to other circumstances, and remainder of this permit, shall not be affected thereby.

21. Civil and Criminal Liability; pursuant to CWA section 309

Except as provided in permit conditions on "Bypass" and "Upset", nothing in this permit shall be construed to relieve the permittee from civil or criminal penalties for noncompliance.

22. Oil and Hazardous Substances Liability; pursuant to CWA section 311

Nothing in this permit shall be construed to preclude the institution of any legal action or relieve the permittee from any responsibilities, liabilities, or penalties to which the permittee is or may be subject under Section 311 of the CWA.

23. State, Tribe, or Territory Law; pursuant to CWA section 510

Nothing in this permit shall be construed to preclude the institution of any legal action or relieve the operator from any responsibilities, liabilities, or penalties established pursuant to any applicable State, Tribe, or Territory law or regulation under authorities preserved by CWA section 510.

B. Specific Categories of NPDES Permits

In accordance with 40 CFR 122.42, the following conditions, in addition to those set forth at 40 CFR 122.41, apply to all NPDES permits within the category specified below and are expressly incorporated into this permit.

1. Existing manufacturing, commercial, mining, and silviculture dischargers; at 40 CFR 122.42 (a). All existing manufacturing, commercial, mining, and silviculture dischargers must notify the Director as soon as they know or have reason to believe:

   a. That any activity has occurred or will occur which would result in the discharge, on a routine or frequent basis, of any toxic pollutant which is not limited in the permit, if that discharge will exceed the highest of the following "notification levels":

      (1) One hundred micrograms per liter (100 μg/l);

      (2) Two hundred micrograms per liter (200 μg/l) for acrolein and acrylonitrile; five hundred micrograms per liter (500 μg/l) for 2,4-dinitrophenol and for 2-methyl-4,6-dinitrophenol; and one milligram per liter (1 mg/l) for antimony;

      (3) Five (5) times the maximum concentration value reported for that pollutant in the permit application in accordance with 40 CFR 122.21(g)(7); or

      (4) The level established by the Director in accordance with 40 CFR 122.44(f).

   b. That any activity has occurred or will occur which would result in any discharge, on a non-routine or infrequent basis, of a toxic pollutant which is not limited in the permit, if that discharge will exceed the highest of the following "notification levels":

      (1) Five hundred micrograms per liter (500 μg/l);

      (2) One milligram per liter (1 mg/l) for antimony;

      (3) Ten (10) times the maximum concentration value reported for that pollutant in the permit application in accordance with 40 CFR 122.21(g)(7).

      (4) The level established by the Director in accordance with 40 CFR 122.44(f).

Attachment C: Location Map

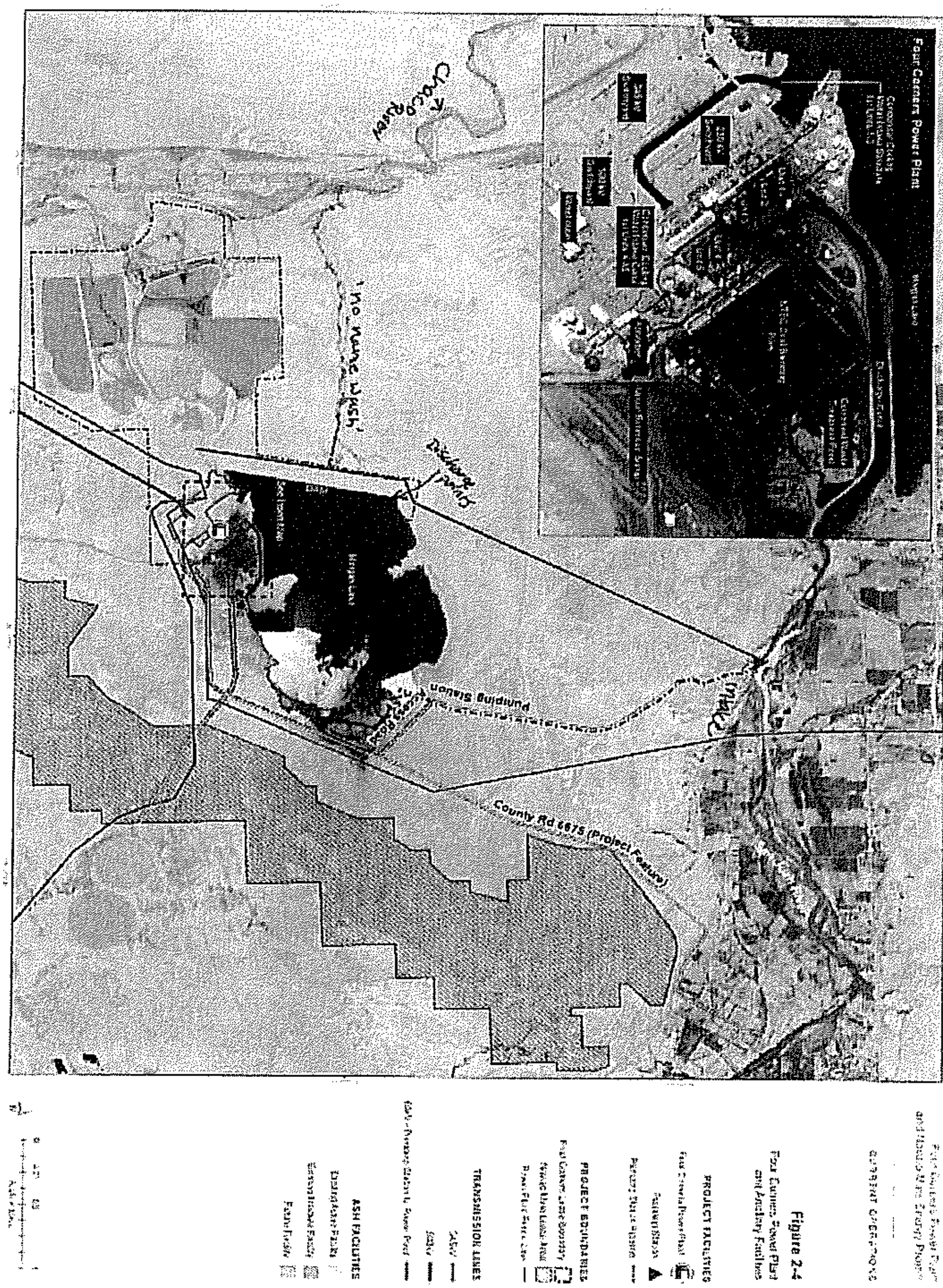

Attachment D: Wastewater Flow Schematic

NO.	TITLE	AVG. RATE (MGPD)
1	RIVER MAKE-UP; COOLING WATER INTAKE	17-28
2	RECIRCULATED COOLING WATER POND DISCHARGE/BLOW-DOWN	3-14.6
	SYSTEM EVAPORATION	13.3
4	SERVICE & RECIRCULATED COOLING WATER INTAKE*	1000-1726.7
5	RECIRCULATED COOLING WATER RETURN	1000-1713.6
6	COMBINED WASTE STREAMS *	13.0
7	CWTP (L.V.W.) DISCHARGE	13.0
8	SANITARY SEWAGE	.027-.04
9	CHEMICAL METAL CLEANING WASTES	.100
10	FLUE GAS DESULFURIZATION WASTEWATER	0.8-1.4
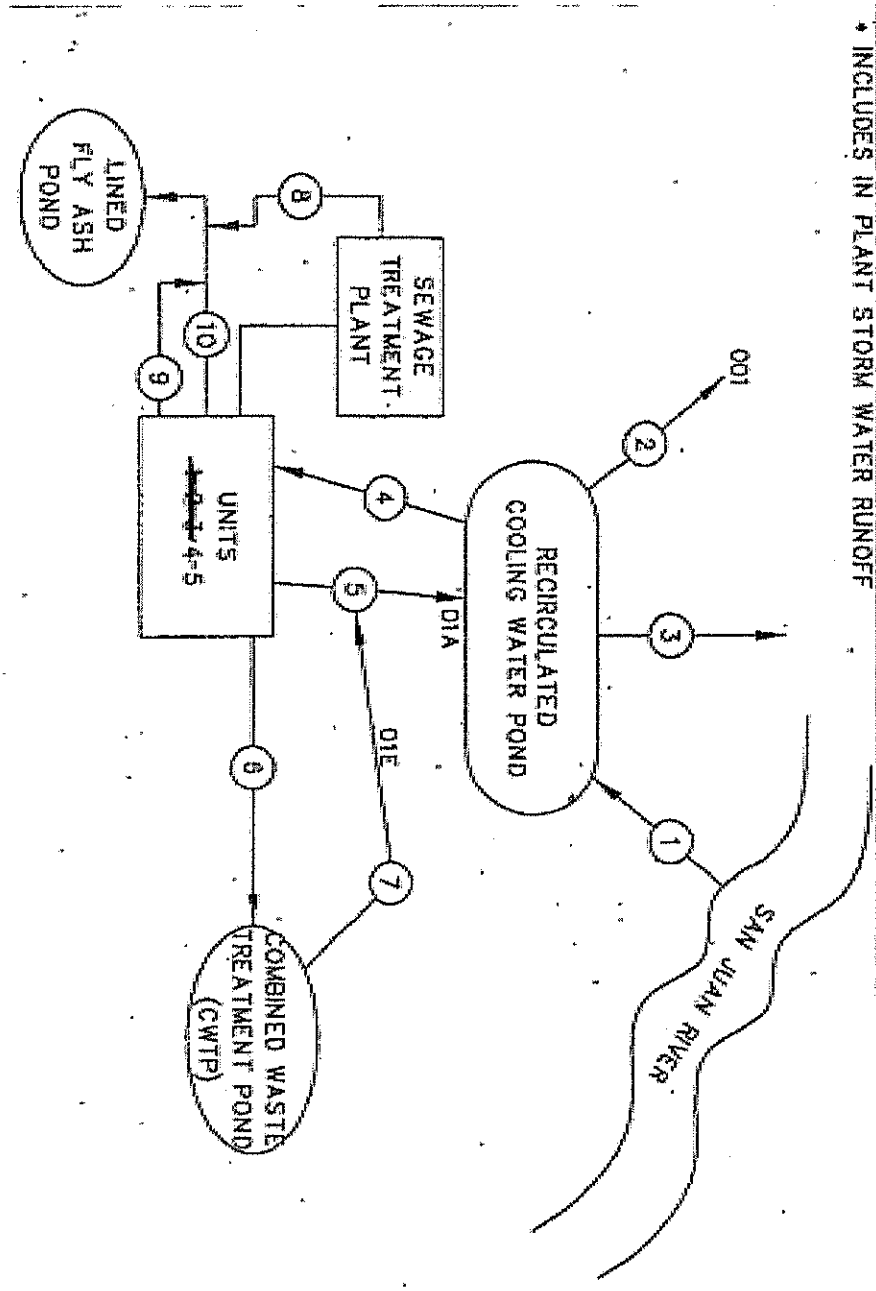
* INCLUDES IN PLANT STORM WATER RUNOFF