CALIFORNIA REGIONAL WATER QUALITY CONTROL BOARD

LOS ANGELES REGION

320 West 4th Street, Suite 200, Los Angeles, CA 90013
(213)576-6600 • Fax (213)576-6660
http://www.waterboards.ca.gov/losangeles/

ORDER NO. R4-2010-0165
NPDES NO. CA0056014

WASTE DISCHARGE REQUIREMENTS FOR THE LAS VIRGENES MUNICIPAL WATER DISTRICT, TAPIA WATER RECLAMATION FACILITY DISCHARGE TO MALIBU CREEK AND LOS ANGELES RIVER

The following Discharger is subject to waste discharge requirements as set forth in this Order:

Table 1. Discharger Information

Discharger	Las Virgenes Municipal Water District
Name of Facility	Tapia Water Reclamation Facility
Facility Address	731 Malibu Canyon Road
	Calabasas, CA 91302
	Los Angeles County
The U.S. Environmental Protection Agency (USEPA) and the Regional Water Quality Control Board have classified this discharge as a major discharge.	

The discharge by the Las Virgenes Municipal Water District from the discharge point identified below is subject to waste discharge requirements as set forth in this Order:

Table 2. Discharge Location

Discharge Point	Effluent Description	Discharge Point Latitude	Discharge Point Longitude	Receiving Water
001	Tertiary treated effluent	34° 04' 55" N	118° 42' 28" W	Malibu Creek
002	Tertiary treated effluent	34° 08' 40" N	118° 41' 50" W	Malibu Creek
003	Tertiary treated effluent	34° 40' 40" N	118° 42' 03" W	Malibu Creek
005	Tertiary treated effluent	34° 9' 21" N	118° 38' 34" W	Los Angeles River

Adopted: September 2, 2010

Table 3. Administrative Information

This Order was adopted by the Regional Water Quality Control Board on:	September 2, 2010
This Order shall become effective on:	October 22, 2010
This Order shall expire on:	August 10, 2015
The Discharger shall file a Report of Waste Discharge in accordance with title 23, California Code of Regulations, as application for issuance of new waste discharge requirements no later than:	180 days prior to the Order expiration date (Title 40, Code of Federal Regulations, part 122.21(d))

I, Samuel Unger, Executive Officer, do hereby certify that this Order with all attachments is a full, true, and correct copy of an Order adopted by the California Regional Water Quality Control Board, Los Angeles Region, on September 2, 2010.

Samuel Unger

Samuel Unger, Executive Officer

Adopted: September 2, 2010

Table of Contents

I. Facility Information 6
II. Findings 7
III. Discharge Prohibitions 19
IV. Effluent Limitations and Discharge Specifications 20
A. Effluent Limitations – Discharge Point 005 22
B. Land Discharge Specifications 31
C. Reclamation Specifications 31
V. Receiving Water Limitations 32
A. Surface Water Limitation 32
B. Groundwater Limitations 35
VI. Provisions 36
A. Standard Provisions 36
B. Monitoring and Reporting Program (MRP) Requirements 39
C. Special Provisions 39
1. Reopener Provisions 39
2. Special Studies, Technical Reports and Additional Monitoring Requirements 41
3. Best Management Practices and Pollution Prevention 46
4. Construction, Operation and Maintenance Specifications 48
5. Special Provisions for Municipal Facilities (POTWs Only) 48
6. Spill Reporting Requirements 49
7. Compliance Schedules 54
VII. Compliance Determination 54
A. General. 55
B. Multiple Sample Data 55
C. Average Monthly Effluent Limitation (AMEL) 55
D. Average Weekly Effluent Limitation (AWEL) 56
E. Maximum Daily Effluent Limitation (MDEL) 56
F. Instantaneous Minimum Effluent Limitation. 56
G. Instantaneous Maximum Effluent Limitation. 57
H. Six-month Median Effluent Limitation 57
I. Percent Removal 57
J. Mass and Concentration Limitations 57
K. Compliance with single constituent effluent limitations 58
L. Compliance with effluent limitations expresses as sum of several constituents 58
M. Mass Emission Rate 58
N. Bacterial Standards and Analysis 58
O. Single Operational Upset 59

List of Tables

Table 1. Discharger Information 1
Table 2. Discharge Location 1
Table 3. Administrative Information 2
Table 4. Facility Information 6
Table 5a. Basin Plan Beneficial Uses – Surface Waters 11

Table 5b. Basin Plan Beneficial Uses – Ground Waters..... 13
Table 6. Effluent Limitations 23
Table 7. Interim Effluent Limitations 30
Table 8. Land Discharge Specifications 31
Table 9. Reclamation Discharge Specifications 31

List of Attachments

Attachment A – Definitions A-1
Attachment B-1 - Las Virgenes-Triunfo Joint Powers Authority Service Area Map……...B-1
Attachment B-2 - Topographic Map of Tapia Water Reclamation Facility……...B-2
Attachment C-1 – Flow Schematic C-1
Attachment C-2 - Map of Receiving Water Monitoring Stations Along Malibu Creek.....C-2
Attachment C-3 - Map of Outfalls and Recycled Water Conveyance System…….....C-3
Attachment D – Standard Provisions D-1
Attachment E – Monitoring and Reporting Program E-1
Attachment F – Fact Sheet F-1
Attachment G – Generic Toxicity Reduction Evaluation (TRE) Workplan…… G-1
Attachment H – SWPPP Requirements (NOT APPLICABLE)…… H-1
Attachment I – Biosolids/sludge Use and Disposal Requirements……. …… I-1
Attachment J – Pretreatment Requirements……. J-1
Attachment K – TMDL-Related Tasks (NOT APPLICABLE)…… K-1
Attachment SW-1 – Factors for Consideration Prior to Discharge Approval for Rain Event of Less than 0.4 inches in 24 Hours……..……...SW-1

I. FACILITY INFORMATION

The following Discharger is subject to waste discharge requirements as set forth in this Order:

Table 4. Facility Information

Discharger	Las Virgenes Municipal Water District
Name of Facility	Tapia Water Reclamation Facility
Facility Address	731 Malibu Canyon Road
	Calabasas, CA 91302
	Los Angeles County
Facility Contact, Title, and Phone	John R. Mundy, General Manager, (818) 251- 2100
Mailing Address	4232 Las Virgenes Road Calabasas, CA 91302
Type of Facility	Publicly Owned Treatment Works
Facility Design Flow	16.1 million gallons per day (MGD)

II. FINDINGS

The California Regional Water Quality Control Board, Los Angeles Region (hereinafter Regional Water Board), finds:

A. Background. Las Virgenes Municipal Water District (hereinafter Discharger or LVMWD) is currently discharging wastewater pursuant to Order No. R4-2005-0074 and National Pollutant Discharge Elimination System (NPDES) Permit No. CA0056014. The Discharger submitted a Report of Waste Discharge, dated December 7, 2009, and applied for an NPDES permit renewal to discharge up to 16.1 MGD of tertiary-treated wastewater from the Tapia Water Reclamation Facility (hereinafter Facility or Tapia WRF). The application was deemed complete on January 20, 2010.

For the purposes of this Order, references to the "discharger" or "permittee" in applicable federal and State laws, regulations, plans, or policy are held to be equivalent to references to the Discharger herein.

B. Facility Description. The Discharger and Triunfo Sanitation District (TrSD) jointly own the Tapia WRF, a publicly owned treatment works (POTW) operated by the Discharger. The Facility treats municipal wastewater to obtain California Title 22 recycled water. The design flow for the facility is 16.1 MGD. In 2008, on average, Tapia WRF treated 8.95 MGD and discharged 4.03 MGD* to Malibu Creek (with no discharge in June and July) and less than 0.1 MGD* to the Los Angeles River. (*These values represent the total annual flow volumes divided by 365 days.) Tapia WRF recycled the remainder of the tertiary-treated wastewater.

Treatment begins with coarse screening and grit removal. Screenings and grit are disposed of in a landfill. The influent wastewater is then pumped to the primary sedimentation tanks. Solids are scraped from the bottom of the tanks and floating solids are skimmed from the top of the water surface. These solids are transferred to the sludge wet well for further treatment.

After primary sedimentation, the primary flows into the biological nutrient reduction (BNR) basins (also called aeration basins). There are six BNR basins operated in two parallel trains of three tanks, and the wastewater passing through the tanks flows in a serpentine path. Primary effluent is mixed with return activated sludge (RAS) to form mixed liquor. The mixed liquor enters the first tank of the train, which is operated in an anoxic mode. The anoxic zones have no air added to keep solids in suspension, and the solids are mixed mechanically by floating mixers. The mixed liquor passes into the second tank of the train where it is aerated to promote nitrification. After passing through the aerated zone of the second tank, the mixed liquor then passes through another anoxic zone before it is either pumped back into the first tank of the treatment train by a recirculation pump, or it flows into the third tank of the train. The mixed liquor, which is recirculated into the first BNR basin of the train, undergoes denitrification in the anoxic environment. The mixed liquor, which is not recirculated, passes into the third tank of the treatment train flowing through another anoxic zone followed by another aerobic zone before exiting

the BNR basins. An alternate option of running these basins in parallel mode is used when one or more tanks are taken offline.

Flow exiting the BNR basins enters into the secondary sedimentation tanks. In these tanks, the solids settle out from the liquid portion of the treated water where they are collected and sent to the RAS reaeration basins. In the RAS reaeration basins the solids undergo further treatment in anoxic and aerobic zones to enhance the removal of nitrogen and condition the biomass to provide an enhanced treatment in the BNR basins. The majority of the RAS is then pumped back to the BNR basins to be mixed with the primary effluent. Excess biomass is wasted (wasted activated sludge or WAS). The WAS is mixed with the primary sludge in the sludge wet well.

The liquid portion of the treated wastewater from the secondary clarifiers flows to the tertiary filters where chlorine and aluminum sulfate are added and the water is filtered through anthracite media. Influent flow to the tertiary filters can be flow-balanced on a daily basis. The water then flows into the chlorine contact channel where sodium hypochlorite is added for disinfection. Sodium bisulfite is added to achieve dechlorination. The resulting effluent is then reused or recycled for beneficial purposes, and excess effluent is discharged to Malibu Creek or the Los Angeles River. Attachments B-1 and B-2 provide maps of the area around the Tapia WRF. Attachment C-1 provides a flow schematic of the facility.

Under standard operations, the waste activated sludge is sent to Rancho Las Virgenes Composting Facility (Rancho Facility). The majority of the WAS is treated at Rancho Facility and recycled as compost. The composting and farm facilities eliminate the need for hauling and disposal of biosolids to landfills. Waste activated sludge (WAS) can be aerobically digested and screened at Tapia and pumped to the Rancho Las Virgenes Farm, a 91-acre site located at 3240 Las Virgenes Road, for subsurface biosolids injection (the last injection was performed in 2003). The fields are planted with a variety of pasture grasses to agronomically remove nutrients from the injection operation. The subsurface biosolids injection is regulated under separate WDRs contained in Order No. 79-107, adopted by this Regional Water Board on June 25, 1979.

Primary and secondary solids or sludges from the Tapia WRF are dosed with ferric chloride before they are pumped through an 8-inch force main to the Rancho Las Virgenes Composting Facility, also operated by LVMWD, located at 3700 Las Virgenes Road, approximately three miles north of Tapia WRF. At the Rancho Facility, the sludge is digested in one of two mesophilic anaerobic digesters. This digested sludge can be land-applied as a liquid or cake. Generally the digested sludge is centrifuged to remove most of the liquid. The liquid generated by centrifugation (centrate) is sent to a centrate treatment facility where it is treated to reduce ammonia and nitrogen levels before being returned to Tapia WRF via the sanitary sewer. The solids (cake) generated during centrifugation are mixed with small woodchips or sawdust (amendment) and recycled compost, which acts as a seed, to begin the composting process.

The amendment/cake mixture is transferred to the compost reactor building where it is deposited in bays and mechanically mixed and transported through the building using the within-vessel composting method to further reduce pathogens. After this period, it is transferred to a cure building where it undergoes static pile aeration for another 30-day period. Upon completion of the process, the compost is tested and given away or sold to the customers for land application as a class "A" (exceptional quality) product.

Water Recycling. Approximately 60 percent of the treated wastewater is used on an annual basis for landscaping irrigation. Recycled water is also used at Tapia WRF, Pepperdine University, Rancho Las Virgenes Composting Facility and Rancho Las Virgenes Farm. The use of reclaimed water is regulated under Water Reclamation Requirements contained in Order No. 87-086. Order No. 87-086 was readopted on May 12, 1997, through the General Order No. 97-072.

Discharge of Excess Tertiary-Treated Effluent. Excess tertiary-treated effluent, after meeting the demands of water recycling, is disposed of through one of several ways. Primarily, it is discharged to Malibu Creek via Discharge Point 001 from November 16th to April 14th of each calendar year. Also, the excess effluent may be pumped over the Calabasas grade and discharged into the Arroyo Calabasas via Discharge Point 005. Arroyo Calabasas is a tributary to the Los Angeles River. There are two other discharge points, which are rarely used. Discharge Point 003 located above the County gauging station (R-13 in Order No. 2005-0075) on Malibu Creek is only used as an additional outlet during extremely high flow conditions. The LVMWD's recycled water reservoir overflow (Discharge Point 002), located behind LVMWD headquarter building, infrequently discharges during rain events. Additionally, excess effluent may be used for irrigating the farm fields at the Rancho Las Virgenes Composting Facility.

C. Legal Authorities. This Order is issued pursuant to section 402 of the federal Clean Water Act (CWA) and implementing regulations adopted by the U.S. Environmental Protection Agency (USEPA) and chapter 5.5, division 7 of the California Water Code (commencing with section 13370). It shall serve as an NPDES permit for point source discharges from this facility to surface waters. This Order also serves as Waste Discharge Requirements (WDRs) pursuant to article 4, chapter 4, division 7 of the California Water Code (commencing with section 13260).

D. Background and Rationale for Requirements. The Regional Water Board developed the requirements in this Order based on information submitted as part of the application, through monitoring and reporting programs, and other available information. The Fact Sheet (Attachment F), which contains background information and rationale for Order requirements, is hereby incorporated into this Order and constitutes part of the Findings for this Order. Attachments A through G, I, J, and SW-1 are also incorporated into this Order.

E. California Environmental Quality Act (CEQA). Under California Water Code (CWC) section 13389, this action to adopt an NPDES permit is exempt from the provisions of CEQA, Public Resources Code sections 21100-21177.

F. Technology-based Effluent Limitations. Section 301(b) of the CWA and implementing USEPA permit regulations at part 122.44, title 40 of the Code of Federal Regulations, require that permits include conditions meeting applicable technology-based requirements at a minimum, and any more stringent effluent limitations necessary to meet applicable water quality standards. The discharge authorized by this Order must meet minimum federal technology-based requirements based on Secondary Treatment Standards at part 133 and Best Professional Judgment (BPJ) in accordance with Part 125.3. A detailed discussion of the technology-based effluent limitations development is included in the Fact Sheet (Attachment F).

G. Water Quality-Based Effluent Limitations. Section 301(b) of the CWA and part 122.44(d) require that permits include limitations more stringent than applicable federal technology-based requirements where necessary to achieve applicable water quality standards. This Order contains requirements for BOD, TSS, and pH, expressed as a technology equivalence requirement, more stringent than secondary treatment requirements that are necessary to meet applicable water quality standards. The rationale for these requirements, which consist of tertiary treatment, is discussed in the Fact Sheet.

Part 122.44(d)(1)(i) mandates that permits include effluent limitations for all pollutants that are or may be discharged at levels that have the reasonable potential to cause or contribute to an exceedance of a water quality standard, including numeric and narrative objectives within a standard. Where reasonable potential has been established for a pollutant, but there is no numeric criterion or objective for the pollutant, water quality-based effluent limitations (WQBELs) must be established using: (1) USEPA criteria guidance under CWA section 304(a), supplemented where necessary by other relevant information; (2) an indicator parameter for the pollutant of concern; or (3) a calculated numeric water quality criterion, such as a proposed State criterion or policy interpreting the State's narrative criterion, supplemented with other relevant information, as provided in Part 122.44(d)(1)(vi).

H. Water Quality Control Plans. The Regional Water Board adopted a Water Quality Control Plan for the Los Angeles Region: Basin Plan for the Coastal Watersheds of Los Angeles and Ventura Counties (hereinafter Basin Plan) on June 13, 1994 that designates beneficial uses, establishes water quality objectives, and contains implementation programs and policies to achieve those objectives for all waters addressed through the plan. In addition, the Basin Plan implements State Water Resources Control Board (hereinafter, the State Water Board or SWRCB) Resolution No. 88-63, which established State policy that all waters, with certain exceptions, should be considered suitable or potentially suitable for municipal or domestic supply. Beneficial uses applicable to the receiving waters are as follows:

Table 5a. Basin Plan Beneficial Uses – Surface Waters

Discharge Point	Receiving Water Name	Beneficial Use(s)
002	Las Virgenes Creek (Hydro Unit 404.22)	Existing: Water contact recreation (REC-1)[1]; noncontact water recreation (REC-2); warm freshwater habitat (WARM); wild life habitat (WILD); rare, threatened, or endangered species (RARE); and wetland habitat (WET)[3] Potential: Municipal and domestic water supply (MUN) [4]; cold freshwater habitat (COLD); migration of aquatic organisms (MIGR)[2]; and spawning, reproduction, and/or early development (SPWN).
001-003	Malibu Creek (Hydro Unit 404.21)	Existing: REC-1[1]; REC-2; WARM; COLD; WILD; RARE; MIGR[2]; SPWN; and WET[3] Potential: MUN [4].
001-003	Malibu Lagoon (Hydro Unit 404.21)	Existing: Navigation (NAV); REC-1[1]; REC-2; estuarine habitat (EST); marine habitat (MAR); WILD; RARE [5]; MIGR[2]; SPWN; and WET[3].
001-003	Malibu Beach (Surfrider Beach) (Hydro Unit 404.21)	Existing: NAV; REC-1[1]; REC-2; commercial and sport fishing (COMM); MAR; WILD; MIGR[2]; SPWN [6]; and shellfish harvesting (SHELL) [7].
005	Los Angeles River upstream of Figueroa Street (Hydro Unit 405.21)	Existing: groundwater recharge (GWR); REC-1[1]; REC-2; WARM; WILD; and WET[3]. Potential: MUN[4] ; and industrial service supply (IND).
005	Los Angeles River downstream of Figueroa Street (Hydro Unit 405.15)	Existing: GWR; REC-1[1]; REC-2; and WARM Potential: MUN[4] ; IND; and WILD.
005	Los Angeles River to Estuary (Hydro Unit 405.12)	Existing: GWR; REC-1[1]; REC-2; RARE; WARM; MAR; WILD; and RARE. Potential: MUN[4] ; IND.; industrial process supply (PROC); MIGR; SPWN; and SHELL.
005	Los Angeles River Estuary (Hydro Unit 405.12)	Existing: IND; NAV; REC-1[1]; REC-2; COMM; EST; MAR; WILD; RARE [5]; MIGR; SPWN; and WET. Potential: SHELL.

Footnote:

[1]. The Los Angeles County Department of Public Works posted signs prohibiting access to the Los Angeles River. However, there is public contact in the downstream areas; hence, the quality of treated wastewater discharged to both Malibu Creek and the Los Angeles River must be such that no health hazard is created.

[2]. Aquatic organisms utilize estuary and coastal wetland, to a certain extent, for spawning and early development. This may include migration into areas, which are heavily influenced by freshwater inputs.

[3]. This wetland habitat may be associated with only a portion of the waterbody. Any regulatory action would require a detailed analysis of the area.

[4]. The potential municipal and domestic supply (p* MUN) beneficial use for the waterbody is consistent with the State Water Resources Control Board Order No. 88-63 and Regional Water Board Resolution No. 89-003; however, the Regional Water Board has only conditionally designated the MUN beneficial use of the surface water and at this time cannot establish effluent limitations designed to protect the conditional designation.

[5]. One or more rare species utilize estuary and coastal wetlands for foraging and/or nesting.

[6]. Most frequently used grunion spawning beaches. Other beaches may be used as well.

[7]. Areas exhibiting large shellfish populations include Malibu, Point Dume, Point Fermin, white Point and Zuma Beach.

The beneficial uses of the receiving ground waters are as follows:

Table 5b. Basin Plan Beneficial Uses – Ground Waters

Discharge Point	Receiving Water Name	Beneficial Use(s)
001 - 003	Santa Monica Mountains-Southern Slopes (DWR Basin No.[1] 4-22)	Malibu Valley Existing Beneficial Uses: Agricultural supply (AGR). Potential Beneficial Uses: MUN; and IND.
005	San Fernando Valley Basin (DWR Basin No.[1] 4-12)	West of Highway 405 Existing Beneficial Uses: MUN, IND, PROC, and AGR. East of Highway 405 (overall) Existing Beneficial Uses: MUN; IND; PROC; and AGR. Narrows area (below confluence of Verdugo Wash with the Los Angeles River) Existing Beneficial Uses: MUN; IND; PROC; and AGR.
005	Los Angeles Coastal Plain (DWR Basin No.[1] 4-11)	Central Basin Existing Beneficial Uses: MUN; IND; PROC; and AGR. West Coast Basin Existing Beneficial Uses: MUN; IND; PROC; and AGR.

Footnote:
[1]. Basins are numbered according to DWR Bulletin No. 118-80 (DWR, 1980).

Requirements of this Order implement the Basin Plan.

Ammonia Water Quality Objective (WQO). The 1994 Basin Plan provided water quality objectives for ammonia to protect aquatic life, in Tables 3-1 through 3-4. However, those ammonia objectives were revised on April 25, 2002, by the Regional Water Board with the adoption of Resolution No. 2002-011, *Amendment to the Water Quality Control Plan for the Los Angeles Region to Update the Ammonia Objectives for Inland Surface Waters (Including Enclosed Bays, Estuaries and Wetlands) with Beneficial Use Designations for Protection of Aquatic Lif*e. The ammonia Basin Plan amendment was approved by the State Water Board, the Office of Administrative Law, and USEPA on April 30, 2003, June 5, 2003, and June 19, 2003, respectively. On December 1, 2005, Resolution No. 2005-014, *Amendment to the Water Quality Control Plan for the Los Angeles Region to Revise the Early Life Stage Implementation Provision of the Freshwater Ammonia Objectives for Inland Surface Waters (Including Enclosed Bays, Estuaries and Wetlands) for Protection of Aquatic Life,* was adopted by the Regional Water Board. Resolution No. 2005-014 was approved by the State Water

Board, the Office of Administrative Law, and USEPA on July 19, 2006, August 31, 2006, and April 5, 2007, respectively. Although the revised ammonia water quality objectives may be less stringent than those contained in the 1994 Basin Plan, they are still protective of aquatic life and are consistent with USEPA's 1999 ammonia criteria update.

On June 7, 2007, the Regional Water Board adopted Resolution No. 2007-005, Amendments to the Water Quality Control Plan – Los Angeles Region – To Incorporate Site-Specific Objectives for Select Inland Surface Waters in the San Gabriel River, Los Angeles River and Santa Clara River Watersheds. This amendment to the Basin Plan incorporates site-specific 30-day average objectives for ammonia along with corresponding site-specific early life stage implementation provisions for select waterbody reaches and tributaries in the Santa Clara, Los Angeles, and San Gabriel River watersheds. The State Water Board, OAL, and USEPA approved this Basin Plan amendment on January 15, 2008, May 12, 2008, and March 30, 2009, respectively. Resolution No. 2007-005 became effective on April 23, 2009.

Chloride WQO. The 1994 Basin Plan contained water quality objectives for chloride in Table 3-8. However, the chloride objectives for some waterbodies were revised on January 27, 1997, by the Regional Board, with the adoption of Resolution No. 97-02, *Amendment to the Water Quality Control Plan for the Los Angeles Region to Incorporate a Policy for Addressing Levels of Chloride in Discharges of Wastewaters*. Resolution No. 97-02 was approved by the State Board, the Office of Administrative Law, and USEPA on October 23, 1997, January 9, 1998, and February 5, 1998, respectively, and is now in effect. The chloride WQO was revised from 150 mg/L to 190 mg/L, for the following segments of the Los Angeles River:

a. Between Sepulveda Flood Control Basin and Figueroa Street (including Burbank Western Channel only), and

b. Between Figueroa Street and the estuary (including Rio Hondo below Santa Ana Freeway only).

The final effluent limitations for chloride prescribed in this Order are based on the revised chloride WQOs and apply at the end of pipe.

On October 25, 2006, the State Water Board adopted a revised 303(d) list. The 2006 303(d) list was partially approved by the USEPA on November 30, 2006. However, on March 8, 2007, USEPA partially disapproved the State's 303(d) List, by disapproving the State's omission of impaired waters that met federal listing regulations or guidance. USEPA is adding 64 waters and 37 associated pollutants to the State's 303(d) list. On June 28, 2007, USEPA transmitted the final approved 2004-2006 Section 303(d) List, which serves as the State's most recent list of impaired waterbodies. The list (hereinafter referred to as the 303(d) List) was prepared in accordance with Section 303(d) of the Federal Clean Water Act to identify specific impaired waterbodies where

water quality standards are not expected to be met after implementation of technology-based effluent limitations on point sources.

Malibu Creek:
Malibu Beach, Malibu Creek, Malibu Lagoon, Malibu Lagoon Beach (Surfrider Beach) are on the 2006 303 (d) List. The following pollutants/stressors, from point and non-point sources, were identified as impacting the receiving waters:
(For footnotes, see page 15.)

1. Malibu Beach - Hydrologic Unit 404.21:
DDT (Fish consumption advisory for DDT)[a]; and indicator bacteria[b].

2. Malibu Creek - Hydrologic Unit 404.21:

Coliform bacteria[b]; Fish barriers (Fish passage)[a]; nutrients (algae)[a]; scum/foam-unnatural[a]; sedimentation/siltation[a]; selenium[a]; sulfates[a]; and trash[a].

3. Malibu Lagoon - Hydrologic Unit 404.21:

Benthic community effects[a]; coliform bacteria[b]; eutrophic[a]; pH (possible sources might be septic systems, storm drains, and birds) [a]; shellfish harvesting advisory; swimming restrictions[a]; and viruses (enteric)[a].

4. Malibu Lagoon Beach (Surfrider Beach) - Hydrologic Unit 404.21:

Coliform bacteria[b]; DDT (Fish consumption advisory for DDT)[a]; and PCBs (Fish consumption advisory for PCBs)[a].

Los Angeles River:
Los Angeles River, Los Angeles River Estuary, and their tributaries are on the 2006 303(d) List. The following pollutants/stressors, from point and non-point sources, were identified as impacting the receiving waters:

1. Los Angeles River Reach 4 (Sepulveda Drive to Sepulveda Dam) – Hydrologic Unit 405.21:
Ammonia[b]; coliform bacteria[a]; copper[b]; lead[b]; nutrients (algae) [b]; and trash[a].

2. Los Angeles River Reach 3 (Figueroa Street to Riverside Drive) – Hydrologic Unit 405.21:
Ammonia[b]; copper[b]; lead[b]; nutrients (algae) [b]; and trash[a].

3. Los Angeles River Reach 2 (Carson to Figueroa Street) – Hydrologic Unit 405.15: Ammonia[b]; coliform bacteria[a]; copper[b]; lead[b]; nutrients (algae) [b]; oil[a]; and trash[a].

4. Los Angeles River Reach 1 (Estuary to Carson Street) – Hydrologic Unit 405.12:

Ammonia[b]; cadmium[b]; coliform bacteria[a]; copper, dissolved[b]; cyanide[a]; diazinon[a]; lead[b]; nutrients (algae) [b]; pH[a]; trash[a]; and zinc, dissolved[a].

5. Los Angeles River Estuary (Queensway Bay) – Hydrologic Unit 405.12:

Chlordane (sediment; historical use of pesticides and lubricants)[a]; DDT (sediment; historical use of pesticides and lubricants)[a]; lead (sediment; historical use of pesticides and lubricants), PCBs (sediment; historical use of pesticides and lubricants)[a]; sediment toxicity[a]; trash[a]; and zinc (sediment)[a].

The Regional Water Board adopted the 2008 303(d) list of impaired waterbodies on July 16, 2009, and submitted the list to the State Water Board for approval.

Footnotes:
[a] TMDL requirements status: [a] is requiring TMDLs.
[b] TMDL requirements status: [b] is being addressed by USEPA-approved TMDL.

I. National Toxics Rule (NTR) and California Toxics Rule (CTR). USEPA adopted the NTR on December 22, 1992, and later amended it on May 4, 1995 and November 9, 1999. About forty criteria in the NTR applied in California. On May 18, 2000, USEPA adopted the CTR. The CTR promulgated new toxics criteria for California and, in addition, incorporated the previously adopted NTR criteria that were applicable in the State. The CTR was amended on February 13, 2001. These rules contain water quality criteria for priority pollutants.

J. State Implementation Policy. On March 2, 2000, the State Water Board adopted the Policy for Implementation of Toxics Standards for Inland Surface Waters, Enclosed Bays, and Estuaries of California (State Implementation Policy or SIP). The SIP became effective on April 28, 2000, with respect to the priority pollutant criteria promulgated for California by the USEPA through the NTR and to the priority pollutant objectives established by the Regional Water Board in the Basin Plan. The SIP became effective on May 18, 2000 with respect to the priority pollutant criteria promulgated by the USEPA through the CTR. The State Water Board adopted amendments to the SIP on February 24, 2005 that became effective on July 13, 2005. The SIP establishes implementation provisions for priority pollutant criteria and objectives and provisions for chronic toxicity control. Requirements of this Order implement the SIP.

K. Compliance Schedules and Interim Requirements. The Policy for Compliance Schedules in National Pollutant Discharge Elimination System Permits, State Water Resources Control Board Resolution No. 2008-0025, allows compliance schedules and interim effluent limitations or discharge specifications be granted to allow time to implement a new, revised, or newly interpreted water quality objective. This Order does not contain any compliance schedules or associated interim requirements.

L. Alaska Rule. USEPA has revised its regulation that specifies when new and revised State and Tribal water quality standards (WQS) become effective for CWA purposes. (40 C.F.R. § 131.21; 65 Fed. Reg. 24641 (April 27, 2000).) Under the revised

regulation (hereinafter Alaska rule), new and revised standards submitted to USEPA after May 30, 2000, must be approved by USEPA before being used for CWA purposes. The final rule also provides that standards already in effect and submitted to USEPA by May 30, 2000, may be used for CWA purposes, whether or not approved by USEPA.

M. Stringency of Requirements for Individual Pollutants. This Order contains restrictions on individual pollutants that are no more stringent than required by the federal CWA. Individual pollutant restrictions consist of technology-based and water quality-based effluent limitations. The technology-based effluent limitations consist of restrictions on biochemical oxygen demand (5-day) (BOD_5), total suspended solids (TSS), and pH, and percent removal of BOD_5 and TSS, which implement the minimum, applicable federal technology-based requirements for POTWs. Restrictions on BOD, TSS and pH are discussed in Section IV.B. of the Fact Sheet. This Order's technology-based pollutant restrictions implement the minimum, applicable federal technology-based requirements.

Water quality-based effluent limitations have been scientifically derived to implement water quality objectives that protect beneficial uses. Both the beneficial uses and the water quality objectives have been approved pursuant to federal law and are the applicable federal water quality standards. To the extent that toxic pollutant water quality-based effluent limitations were derived from the CTR, the CTR is the applicable standard pursuant to part 131.38. The scientific procedures for calculating the individual water quality-based effluent limitations for priority pollutants are based on the CTR-SIP, which was approved by USEPA on May 18, 2000. Most beneficial uses and water quality objectives contained in the Basin Plan were approved under State law and submitted to and approved by USEPA prior to May 30, 2000. Any water quality objectives and beneficial uses submitted to USEPA prior to May 30, 2000, but not approved by USEPA before that date, are nonetheless "applicable water quality standards for purposes of the CWA" pursuant to part 131.21(c)(1). Collectively, restrictions on individual pollutants in this Order/Permit are no more stringent than required by the CWA.

N. Antidegradation Policy. 40 C.F.R. § 131.12 requires that the State water quality standards include an antidegradation policy consistent with the federal antidegradation policy. The State Water Board established California's antidegradation policy in State Water Board Resolution No. 68-16. This resolution incorporates the federal antidegradation policy, where the federal policy applies under federal law. Resolution No. 68-16 requires that existing quality of waters be maintained unless degradation is justified based on specific findings. The Regional Water Board's Basin Plan implements, and incorporates by reference, both the State and federal antidegradation policies. As discussed in detail in the Fact Sheet, the permitted discharge is consistent with the antidegradation provisions of 40 C.F.R. § 131.12 and State Water Board Resolution No. 68-16.

O. Anti-Backsliding Requirements. CWA Sections 402(o)(2) and 303(d) and 40 C.F.R. §122.44(l) prohibit backsliding and require effluent limitations, permit conditions, and

standards in a reissued permit to be as stringent as those in the previous permit, with some exceptions where limitations and conditions may be relaxed. Some effluent limitations in this Order are less stringent than those in the previous Order. As discussed in detail in the Fact Sheet, this relaxation of effluent limitations is consistent with the anti-backsliding requirements of the CWA and federal regulations.

P. Endangered Species Act. This Order does not authorize any act that results in the taking of a threatened or endangered species or any act that is now prohibited, or becomes prohibited in the future, under either the California Endangered Species Act (Fish and Game Code sections 2050 to 2097) or the Federal Endangered Species Act (16 U.S.C. sections 1531 to 1544). This Order requires compliance with effluent limits, receiving water limits, and other requirements to protect the beneficial uses of waters of the State. The discharger is responsible for meeting all requirements of the applicable Endangered Species Act.

Q. Monitoring and Reporting. 40 C.F.R. §122.48 requires that all NPDES permits specify requirements for recording and reporting monitoring results. California Water Code sections 13267 and 13383 authorize the Regional Water Board to require technical and monitoring reports. The Monitoring and Reporting Program (Attachment E) establishes monitoring and reporting requirements to implement federal and State requirements.

R. Standard and Special Provisions. Standard Provisions, which apply to all NPDES permits in accordance with 40 C.F.R. §122.41, and additional provisions, which apply to all NPDES permits in accordance with 40 C.F.R. §122.42, are provided in Attachment D. The Regional Water Board has also included in this Order special provisions applicable to the Discharger. The rationale for the special provisions contained in this Order is provided in the attached Fact Sheet (Attachment F).

S. Sanitary Sewer Overflows. The State Water Board issued General Waste Discharge Requirements for Sanitary Sewer Systems, Water Quality Order No. 2006-0003-DWQ (General Order) on May 2, 2006. The General Order requires public agencies that own or operate sanitary sewer systems with greater than one mile of pipes or sewer lines to enroll for coverage under the General Order. The General Order requires agencies to develop sanitary sewer management plans and report all sanitary sewer overflows (SSOs), among other requirements and prohibitions. Furthermore, the General Order contains requirements for operation and maintenance of collection systems and for reporting and mitigating SSOs. The Discharger's collection system is part of the POTW that is subject to this Order. The Discharger must comply with both the General Order and this Order.

T. Sewage Sludge/Biosolids Requirements. Section 405 of the CWA and implementing regulations at 40 C.F.R § 503 require that producers of sewage sludge/biosolids meet certain reporting, handling, and use or disposal requirements. The State has not been delegated the authority to implement this program; therefore, USEPA is the implementing agency. This Order contains sewage sludge/biosolids requirements pursuant to 40 C.F.R. § 503 that are applicable to the Discharger.

U. Provisions and Requirements Implementing State Law. The provisions/requirements in subsection V.B of this Order are included to implement State law only. These provisions/requirements are not required or authorized under the federal CWA; consequently, violations of these provisions/requirements are not subject to the enforcement remedies that are available for NPDES violations.

V. Notification of Interested Parties. The Regional Water Board has notified the Discharger and interested agencies and persons of its intent to prescribe Waste Discharge Requirements for the discharge and has provided them with an opportunity to submit their written comments and recommendations by May 7, 2010. Details of notification are provided in the Fact Sheet of this Order.

W. Consideration of Public Comment. The Regional Water Board, in a public meeting, heard and considered all comments pertaining to the discharge. Details of the Public Hearing are provided in the Fact Sheet of this Order.

THEREFORE, IT IS HEREBY ORDERED, that Order No. R4-2005-0074 is superseded upon the effective date of this Order except for enforcement purposes, and, in order to meet the provisions contained in division 7 of the California Water Code (commencing with section 13000) and regulations adopted thereunder, and the provisions of the federal Clean Water Act (CWA) and regulations and guidelines adopted thereunder, the Discharger shall comply with the requirements in this Order.

III. DISCHARGE PROHIBITIONS

A. Discharge of wastewater at a location different from that described in this Order is prohibited.

B. The bypass or overflow of untreated wastewater or wastes to surface waters or surface water drainage courses is prohibited, except as allowed in Standard Provision I.G. of Attachment D, Standard Provisions.

C. The monthly average effluent dry weather discharge flow rate from the facility shall not exceed the design capacity.

D. The Discharger shall not cause degradation of any water supply, except as consistent with State Water Board Resolution No. 68-16.

E. The treatment or disposal of wastes from the facility shall not cause pollution or nuisance as determined in section 13050, subdivisions (l) and (m), of the California Water Code.

F. The discharge of any substances in concentrations toxic to animal or plant is prohibited.

G. The discharge of any radiological, chemical, or biological warfare agent or high level radiological waste is prohibited.

IV. DISCHARGE PROHIBITION FOR MALIBU CREEK

A. Santa Monica Bay Watershed includes Santa Monica Bay and the surrounding land area that drains naturally into the Bay, including the Malibu Creek Watershed. The Creek flows through a steep-sided canyon to Malibu Lagoon and Surfrider Beach. The Santa Monica Bay Restoration Commission, formerly known as the Santa Monica Bay Restoration Project (SMBRP) developed the *Santa Monica Bay Restoration Plan* (BRP) that serves as the blueprint for the restoration and enhancement of the Bay. The Regional Water Board plays a leading role in the implementation of the plan. Two of the proposed priorities of the plan are reduction of pollutants of concern at the source (which includes municipal wastewater treatment plants) and implementation of mass emission caps on some of the pollutants of concern.

B. The Malibu Creek Watershed Advisory Council (Council) became part of the Santa Monica Bay Restoration Project as a BRP implementing committee. As part of overall watershed management, the Council has identified the reduction of freshwater flows to the Lagoon, reduction of nutrients to the Creek and Lagoon, protection of human health in the Creek, Lagoon, and surfzone, and restoration of a fully functioning Lagoon, as high priorities. Previous investigations conducted for the SMBRP showed pathogens were detected in summer runoff at four storm drain or channel locations. Possible sources of pathogen contamination include pet and livestock feces, illicit sewer connections to the storm drains, leaking sewer lines, malfunctioning septic systems, and improper waste disposal by recreational vehicles, campers or transients. Additional potential sources of human pathogens in nearshore waters include sewage overflows into storm drains, small boat waste discharges, and bathers.

C. The *Malibu Creek Watershed Natural Resources Plan* completed in July 1995 by the Natural Resources Conservation Service (NRCS) demonstrated significant increases in flow in Malibu Creek from urban runoff. The U.S. Fish and Wildlife Service listed the Tidewater Goby (*Eucyclogobius newberry*) as an endangered species in February 1994. On August 18, 1997, the National Marine Fisheries Service listed the Southern California Steelhead Trout (*Oncorhynchus mykiss*) as an endangered species. The tidewater goby historically existed in Malibu Lagoon but died out in the 1950's. A tidewater goby population was successfully reintroduced to the Lagoon on April 5, in 1991. Population surveys conducted by the Resource Conservation District of the Santa Monica Mountains and UCLA show that the Goby population has remained stable since their reintroduction. Malibu Creek has the southernmost known sustained run of steelhead trout in North America.

D. Los Angeles County Lifeguards favored reduced flow to the Lagoon, and thus, less time with an open sandbar during the dry season, because of a standing riptide current that developed around the mouth of the creek opening and because they

cannot drive emergency vehicles across the Creek mouth area to provide emergency service to the west side of Surfrider Beach.

E. To minimize the contribution of Tapia's discharge to the excess freshwater flow into Malibu Lagoon (which leads to elevated lagoon level and frequent breaching of the sandbar once or if the sandbar has formed), thus impacting both wildlife and human health beneficial uses, this Order continues to enforce the existing discharge prohibition from April 15 to November 15 of each calendar year, the time period of heaviest recreational use and historically-lowest freshwater flows in the watershed.

V. DISCHARGE PROHIBITION EXEMPTION FOR MALIBU CREEK

Malibu Creek: The Discharger shall not discharge as otherwise permitted by these requirements to Malibu Creek at any of its discharge points from April 15 to November 15 of each calendar year. This prohibition will not be in effect during any of the following events specified below. However, the exceptions specified below only apply to an exception of allowing a discharge during the prohibition period. They do not provide an exception for meeting the limitations contained in this Order:

A. Treatment plant upset or operational emergencies

Treatment plant upset or operational emergencies consist of exceptional incidents that result in unintentional and temporary noncompliance with technology-based permit effluent limitations because of factors beyond the reasonable control of the Discharger (40 C.F.R. § 122.41(n)). These factors exclude raw sewage spills, sludge spills, operational errors, improperly designed or inadequate treatment facilities, lack of preventive maintenance, careless or improper operation of the treatment plant and lack of reasonable engineering judgment to prevent noncompliance. The Discharger must demonstrate through properly signed, contemporaneous operating logs, or other relevant evidence that: a) an upset or operational emergency occurred and the Discharger can identify the cause(s) of the upset or operational emergency; b) the facility was properly operated and maintained; c) the Discharger has notified the Regional Board of the incident within 24-hours; and, d) the Discharger implemented immediate remedial measures to minimize the noncompliance and/or implemented corrective measures to prevent the noncompliance, or recurrence of the incident.

B. Qualifying storm events as determined by the Executive Officer

The Discharger may discharge to Malibu Creek during the prohibition period during storm events without prior approval of the Executive Officer provided that *all* of the following conditions have been met:

1. The rainfall event produces 0.4 inches or greater of precipitation in 24 hours at the Facility Rain Gauge; and
2. The Malibu Lagoon Sand Bar is open; and
3. The spray fields at Rancho Las Virgenes Farm are saturated; and

4. There is no demand for recycled water; and
5. The capacity to send wastewater to the Los Angeles River has been exhausted; and
6. All other disposal options are exhausted.

For a rainfall event of less than 0.4 inches in 24 hours at the Facility Rain Gauge, the Discharger may discharge to Malibu Creek during the prohibition period during storm events with prior approval of the Executive Officer provided that *all* of the following conditions have been met:

1. The Malibu Lagoon Sand Bar is open; and
2. The spray fields at Rancho Las Virgenes Farm are saturated; and
3. There is no demand for recycled water; and
4. The capacity to send wastewater to the Los Angeles River has been exhausted; and
5. All other disposal options are exhausted.

The Discharger shall maintain a log of the discharge. Other factors that will be considered before approval to discharge is granted are listed on Attachment SW-1. The log shall include, but not be limited to, the date and time of discharge, the amount of discharge, weather conditions, the discharge outfalls, and the condition of the Malibu Lagoon sand bar.

C. <u>The existence of minimal streamflow conditions that require flow augmentation in Malibu Creek to sustain endangered species as determined by the Executive Officer</u>. The Discharger shall augment flow in the Malibu Creek, such that 2.5 cfs of maximum total flow is measured at the Los Angeles County gauging station F-130-R to sustain the steelhead trout habitat. Discharge to augment flow shall not be dependent on whether receiving water station RSW-MC004D (formerly known as station R-4) is dry or wet. The discharge shall not cause a breach of the Malibu Lagoon. During the prohibition period, the Discharger must obtain written permission from the Executive Officer to discharge into Malibu Creek for the purpose of this provision.

VI. EFFLUENT LIMITATIONS AND DISCHARGE SPECIFICATIONS

A. Effluent Limitations - Discharge Points 001, 002, 003, and 005

1. Effluent Limitations Applicable to Discharge Points 001, 002, 003, and 005

a. The Discharger shall maintain compliance with the effluent limitations in Table 6a at Discharge Points 001, 002, and 003 into Malibu Creek, and at Discharge Point 005 into Los Angeles River with compliance measured at the following locations as described in the attached Monitoring and Reporting Program (MRP):

- Monitoring Location EFF001 for Discharge Points 001 and 003;

- Monitoring Location EFF002 for Discharge Point 002; and,
- Monitoring Location EFF005 for Discharge Point 005.

b. In no case shall the combined mass emission rate from Discharge Points 001, 002, 003, and 005 exceed the mass emission rate, calculated based on the concentration-based effluent limitation multiplied by the existing plant design flow rate, as specified in Table 6a.

Table 6a. Effluent Limitations Applicable to Discharge Points 001, 002, 003, and 005
(For footnotes, refer to pages 28 and 29)

Parameter	Units	Effluent Limitations				
		Average Monthly	Average Weekly	Max. Daily	Instanta-neous Minimum	Instanta-neous Maximum
Biochemical Oxygen Demand 5-day @ 20°C	mg/L	10	--	20	--	--
	lbs/day[1]	1.3E3	--	2.7E3	--	--
Total Suspended Solids	mg/L	5.0	--	10	--	--
	lbs/day [1]	6.7E2	--	1.3E3	--	--
pH	standard units	--	--	--	6.5	8.5
Settleable Solids	ml/L	0.1	--	0.2	--	--
Oil and grease	mg/L	5	--	10	--	--
	lbs/day[1]	6.7E2		1.3E3	--	--
Total Residual Chlorine[2]	mg/L	--	--	0.1	--	--
MBAS	mg/L	0.5	--	--	--	--
	lbs/day[1]	67	--	--	--	--
Mercury	µg/L	0.051	--	0.10	--	--
	lbs/day[1]	6.8E-3	--	1.3E-2	--	--
Cyanide	µg/L	4.2	--	8.5	--	--
	lbs/day[1]	0.56	--	1.1	--	--
Aldrin	µg/L	1.4E-4	--	3.0E-4	--	--
	lbs/day[1]	1.9E-5	--	4.0E-5	--	--
Alpha-BHC	µg/L	1.3E-2	--	2.6E-2	--	--
	lbs/day[1]	1.7E-3	--	3.5E-3	--	--
Dichlorobromomethane	µg/L	46	--	77	--	--

Parameter	Units	Effluent Limitations				
		Average Monthly	Average Weekly	Max. Daily	Instanta-neous Minimum	Instanta-neous Maximum
	lbs/day[1]	6.2	--	10	--	--
4,4'-DDE	µg/L	5.9E-4	--	1.2E-3	--	--
	lbs/day[1]	7.9E-5	--	1.6E-4	--	--
4,4'-DDD	µg/L	8.4E-4	--	1.7E-3	--	--
	lbs/day[1]	1.1E-4	--	2.3E-4	--	--
Dieldrin	µg/L	1.4E-4	--	3.0E-4	--	--
	lbs/day[1]	1.8E-5	--	4.0E-5	--	--
Endrin	µg/L	4.3E-2	--	8.6E-2	--	--
	lbs/day[1]	5.8E-3	--	1.2E-2	--	--
Heptachlor	µg/L	2.1E-4	--	4.0E-4	--	--
	lbs/day[1]	2.8E-5	--	5.4E-5	--	--

2. Effluent Limitations Applicable to Discharge Points 001, 002, and 003 – Malibu Creek

a. The Discharger shall maintain compliance with the effluent limitations in Table 6b at Discharge Points 001, 002, and 003 into Malibu Creek with compliance measured at the following locations as described in the attached MRP:

- Monitoring Location EFF001 for Discharge Points 001 and 003; and
- Monitoring Location EFF002 for Discharge Point 002.

b. In no case shall the combined mass emission rate from Discharge Points 001, 002, and 003 exceed the mass emission rate, calculated based on the concentration-based effluent limitation multiplied by the existing plant design flow rate, as specified in Table 6b.

c. The ammonia nitrogen effluent limitation is the translated effluent limitation based on the water quality objective for ammonia in the current Basin Plan, Table 3-1 and Table 3-2, which resulted from Resolution No. 2002-011, and 2005-014 adopted by the Regional Water Board on April 25, 2002, and December 1, 2005, respectively. This effluent limitation is derived according to the Implementation Section of Resolution No. 2002-011.

Table 6b. Effluent Limitations Applicable to Discharge Points 001, 002, and 003
(For footnotes, refer to pages28 and 29)

Parameter	Units	Effluent Limitations				
		Average Monthly	Average Weekly	Max. Daily	Instanta-neous Minimum	Instanta-neous Maximum
Total dissolved solids	mg/L	2000	--	--	--	--
	lbs/day[1]	2.7E5	--	--	--	--
Chloride	mg/L	500	--	--	--	--
	lbs/day[1]	6.7E4	--	--	--	--
Sulfate	mg/L	500	--	--	--	--
	lbs/day[1]	6.7E4	--	--	--	--
Boron	mg/L	2	--	--	--	--
	lbs/day[1]	2.7E2	--	--	--	--
Total Ammonia as Nitrogen	mg/L	3.1	--	8.1	--	--
	lbs/day[1]	4.2E2	--	1.1E3	--	--
Nitrate + Nitrite as Nitrogen	mg/L	8[3]	--	--	--	--
	lbs/day[1]	1.1E3				
Total Phosphorus[6] (Summer- April 15th, November 15th)	mg/L	3	--	--	--	--
	lbs/day[1]	4.0E2				
Total Phosphorus[6] (Winter- November 16th to April 14th)	mg/L	3		4		
	lbs/day[1]	4.0E2		5.4E2		
Bis(2-Ethylhexyl)Phthalate	µg/L	5.9	--	15	--	--
	lbs/day[1]	0.79	--	2.0	--	--

3. Effluent Limitations Applicable to Discharge Point 005 – Los Angeles River

a. The Discharger shall maintain compliance with the following effluent limitations at Discharge Point 005 into the Los Angeles River with compliance measured at Monitoring Location EFF005, as described in the attached MRP:

Table 6c. Effluent Limitations Applicable to Discharge Point 005
(For footnotes, refer to pages28 and 29)

Parameter	Units	Effluent Limitations				
		Average Monthly	Average Weekly	Max. Daily	Instanta-neous Minimum	Instanta-neous Maximum
Total dissolved solids	mg/L	950	--	--	--	--
	lbs/day[1]	1.3E5	--	--	--	--
Chloride	mg/L	190 [4]	--	--	--	--
	lbs/day[1]	2.6E4	--	--	--	--
Sulfate	mg/L	300	--	--	--	--
	lbs/day[1]	4.0E4	--	--	--	--
Boron	mg/L	1.5	--	--	--	--
	lbs/day[1]	2.0E2	--	--	--	--
Fluoride	mg/L	1.6	--	--	--	--
	lbs/day[1]	2.2E2	--	--	--	--
Total Ammonia as N	mg/L	2.3[5]	--	10.1	--	--
	lbs/day[1]	3.1E2		1.36E3		
Nitrate + Nitrite as Nitrogen	mg/L	8 [5]		--	--	--
	lbs/day[1]	1.1E3				
Nitrite as Nitrogen	mg/L	1 [5]	--	--	--	--
	lbs/day[1]	1.3E2				
Nitrate as Nitrogen	mg/L	8 [5]	--	--	--	--
	lbs/day[1]	1.1E3				
Total Phosphorus[6]	mg/L	3	--	4	--	--
	lbs/day[1]	4.0E2	--	8.0E2	--	--
Arsenic	µg/L	10	--	--	--	--
	lbs/day[1]	1.3	--	--	--	--
Perchlorate	µg/L	6	--	--	--	--
	lbs/day[1]	0.81	--	--	--	--
Total Trihalomethanes [9]	µg/L	80	--	--	--	--
	lbs/day[1]	11	--	--	--	--
Cadmium (wet weather) [7]	µg/L	1.1	--	3.1	--	--
	lbs/day[1]	0.1	--	0.4	--	--
Copper (wet weather)	µg/L	11	--	17	--	--

Parameter	Units	Effluent Limitations				
		Average Monthly	Average Weekly	Max. Daily	Instanta-neous Minimum	Instanta-neous Maximum
[7]	lbs/day[1]	1.5	--	2.3	--	--
Copper (dry weather) [8]	µg/L	27	--	41	--	--
	lbs/day[1]	3.6	--	5.5	--	--
Lead (wet weather) [7]	µg/L	23	--	62	--	--
	lbs/day[1]	3.1	--	8.3	--	--
Lead (dry weather) [8]	µg/L	13	--	35	--	--
	lbs/day[1]	1.7	--	4.7	--	--
Zinc (wet weather) [7]	µg/L	120	--	160	--	--
	lbs/day[1]	16	--	21	--	--
Selenium (dry weather)[8]	µg/L	4.1	--	8.2	--	--
	lbs/day[1]	0.6	--	1	--	--
Bis(2-Ethylhexyl)Phthalate	µg/L	4	--	15	--	--
	lbs/day[1]	0.54	--	2.0	--	--

Footnotes:

[1] The mass emission rates are based on the existing plant design flow rate of 16.1 mgd, and are calculated as follows: Flow(MGD) x Concentration (mg/L) x 8.34 (conversion factor) = lbs/day. However, if the design capacity is reduced to achieve NDN process, the mass-based effluent limitation will accordingly be modified upon certification and approval of re-rated treatment plant capacity. During wet-weather storm events in which the flow exceeds the design capacity, the mass discharge rate limitations shall not apply, and concentration limitations will provide the only applicable effluent limitations.

[2] Total residual chlorine concentration excursions of up to 0.3 mg/L, at the point in treatment train immediately following dechlorination, shall not be considered violations of this requirement provided the total duration of such excursions do not exceed 15 minutes during any 24-hour period. Peaks in excess of 0.3 mg/L lasting less than one minute shall not be considered a violation of this requirement.

[3] This is based on the waste load allocation (WLA) for nitrate plus nitrite as nitrogen in the Malibu Creek Watershed Nutrients TMDL developed by USEPA in 2003. This TMDL became effective on March 23, 2004. The WLA of 8 mg/L assigned to the Tapia WRF for nitrate plus nitrite as nitrogen was for the winter season (November 16 – April 14). Since the Tapia WRF has a Malibu Creek discharge prohibition during the summer season (April 15 – November 15), U.S. EPA deemed any potential summer discharge from the Tapia WRF negligible in its nutrient loading, and therefore, did not establish a wasteload allocation for Tapia WRF for the summer season. For consistency, the Order No. 2005-0074 assigned an effluent limitation of 8 mg/L for nitrate plus nitrite as nitrogen for the summer season. The limitations are continued forward in this Permit.

[4] In accordance with the Resolution 98-027, adopted by the Regional Water Board on April 13, 1998, the

chloride limitation has been increased from 150 to 190 mg/L.

[5] These are the waste load allocations (WLA) established for the Tapia WRF for ammonia, nitrate plus nitrite, nitrate, and nitrite in the Nutrient TMDL for the Los Angeles River, Resolution No. 2003-009, *Amendment to the Water Quality Control Plan for the Los Angeles Region to Include a TMDL for Nitrogen Compounds in the Los Angeles River* (LA River *Nitrogen Compounds TMDL)*.

[6] A wasteload allocation for phosphorus was not established in the Malibu Creek nutrients TMDL or the Los Angeles River Nitrogen Compounds TMDL. Antidegradation policy dictates that the existing permit limitation be retained, which applies to both Malibu Creek and the Los Angeles River discharge. The effluent limitation was included in Order No. 2005-0074 and continues forward in this Order. The effluent limitation was based on statistical analysis on performance data from January 2000 through October 2004, using P-limit software. Because the limitation was based upon plant performance, no additional treatment is needed in order to comply with this limitation.

[7] The effluent limitation was derived based on the effluent-specific coefficient of variation (CV) and the applicable **wet weather** wasteload allocation (WLA), contained in Resolution No. R2007-014, Amendment to the Water Quality Control Plan for the Los Angeles Region to Incorporate a Total Maximum Daily Load for Metals for the Los Angeles River, adopted by the Regional Board on September 6, 2007. The effluent limitation was developed in a manner consistent with the procedures in Section 1.4 of the State Water Resources Control Board Policy for Implementation of Toxics Standards for Inland Surface Waters, Enclosed Bays, and Estuaries of California (2000). This is consistent with the implementation provision in the Attachment A to Resolution No. R2007-014. Resolution No. R2007-0014 supersedes Resolution No. R05-006, Amendment to the Water Quality Control Plan for the Los Angeles Region to Incorporate a Total Maximum Daily Load for Metals for the Los Angeles River and its Tributaries (LA River Metals TMDL), adopted by the Regional Board on June 2, 2005. The Metals TMDL was approved by the State Water Board, with the adoption of Resolution No. 2008-0046. On October 14, 2008 and October 29, 2008, respectively, OAL and USEPA approved the LA River Metals TMDL. It went into effect on October 29, 2008. According to the LA River Metals TMDL, wet weather is defined as "when the maximum daily flow in the River is equal to or greater than 500 cfs at the LA River Wardlow gage station." The LA River Wardlow gage station is same as RSW-LR003D in Attachment E of this Order.

[8] The effluent limitation was derived based on the effluent-specific CV and the applicable **dry weather** wasteload allocation (WLA), contained in Resolution No. R2007-014, Amendment to the Water Quality Control Plan for the Los Angeles Region to Incorporate a Total Maximum Daily Load for Metals for the Los Angeles River, adopted by the Regional Board on September 6, 2007. The effluent limitation was developed in a manner consistent with the procedures in Section 1.4 of the State Water Resources Control Board Policy for Implementation of Toxics Standards for Inland Surface Waters, Enclosed Bays, and Estuaries of California (2000). This is consistent with the implementation provision in the Attachment A to Resolution No. R2007-014. Resolution No. R2007-0014 supersedes Resolution No. R05-006, Amendment to the Water Quality Control Plan for the Los Angeles Region to Incorporate a Total Maximum Daily Load for Metals for the Los Angeles River and its Tributaries (LA River Metals TMDL), adopted by the Regional Board on June 2, 2005. The Metals TMDL was approved by the State Water Board, with the adoption of Resolution No. 2008-0045. On October 14, 2008 and October 29, 2008, respectively, OAL and USEPA approved the *LA River Metals TMDL*. It went into effect on October 29, 2008. According to the LA River Metals TMDL, dry weather is defined as "when the maximum daily flow in the River is less than 500 cfs at the LA River Wardlow gage station." The LA River Wardlow gage station is same as RSW-LR003D in Attachment E of this Order.

[9] Total trihalomethanes is the sum of the four individual trihalomethane compounds: bromodichloromethane, bromoform, chloroform, and dibromochloromethane. This limitation is based on the Basin Plan WQO incorporation by reference of the Maximum contaminant Levels (MCLs) of Title 22 of the California Code of Regulations.

4. **Other Effluent Limitations Applicable to Discharge Points 001, 002, 003, and 005**

a. **Percent Removal:** The average monthly percent removal of BOD 5-day 20°C and total suspended solids shall not be less than 85 percent.

b. The temperature of wastes discharged shall not exceed 86°F except as a result of external ambient temperature.

c. The radioactivity of the wastes discharged shall not exceed the limits specified in Title 22, Chapter 15, Article 5, Section 64443, of the California Code of Regulations (CCR), or subsequent revisions.

d. The wastes discharged to water courses shall at all times be adequately disinfected. For the purpose of this requirement, the wastes shall be considered adequately disinfected if: 1) the median number of total coliform bacteria measured in the disinfected effluent does not exceed an MPN or CFU of 2.2 per 100 milliliters utilizing the bacteriological results of the last seven days for which analyses have been completed; 2) the number of total coliform bacteria does not exceed an MPN or CFU of 23 per 100 milliliters in more than one sample in any 30-day period; and 3) no sample exceeds 240 MPN or CFU of total coliform bacteria per 100 milliliters. Samples shall be collected at a time when wastewater flow and characteristics are most demanding on treatment facilities and the disinfection processes.

e. For the protection of the water contact recreation beneficial use, the wastes discharged to water courses shall have received adequate treatment, so that the turbidity of the treated wastewater does not exceed: (a) an average of 2 Nephelometric turbidity units (NTUs) within a 24 hour period; (b) 5 NTUs more than 5 percent of the time (72 minutes) during any 24 hour period; and (c) 10 NTUs at any time.

f. To protect underlying ground water basins, pollutants shall not be present in the wastes discharged at concentrations that pose a threat to ground water quality.

g. Acute Toxicity Limitation and Effluent Requirements:

i. The acute toxicity of the effluent shall be such that:

(a) The average survival in the undiluted effluent for any three (3) consecutive 96-hour static renewal bioassay tests shall be at least 90%, and

(b) No single test produces less than 70% survival.

ii. If either of the above requirements VI.A.4.g.i.(a) or VI.A.4.g.i.(b) is not met, the Discharger shall conduct six additional tests over a twelve-week period. The Discharger shall ensure that they receive results of a failing acute toxicity

test within 24 hours of the completion of the test and the additional tests shall begin within 5 business days of the receipt of the result. If the additional tests indicate compliance with acute toxicity limitation, the Discharger may resume testing at the regular frequency as specified in the monitoring and reporting program. However, if the results of any two of the six accelerated tests are less than 90% survival, then the Discharger shall begin a Toxicity Identification Evaluation (TIE). The TIE shall include all reasonable steps to identify the sources of toxicity. Once the sources are identified, the Discharger shall take all reasonable steps to reduce toxicity to meet the limits.

iii. If the initial test and any of the additional six acute toxicity bioassay tests result in less than 70 % survival, the Discharger shall immediately implement the Initial Investigation Toxicity Reduction Evaluation (TRE) Workplan described later in this section.

iv. The Discharger shall conduct acute toxicity monitoring as specified in Attachment E - Monitoring and Reporting Program (MRP).

h. Chronic Toxicity Trigger and Requirements:

i. The chronic toxicity of the effluent shall be expressed and reported in toxic units, where:

$$TU_c = \frac{100}{NOEC}$$

The No Observable Effect Concentration (NOEC) is expressed as the maximum percent effluent concentration that causes no observable effect on test organisms, as determined by the results of a critical life stage toxicity test.

ii. There shall be no chronic toxicity in the effluent discharge.

iii. If the chronic toxicity of the effluent exceeds the 1.0 TUc monthly median trigger, the Discharger shall immediately implement accelerated chronic toxicity testing according to Attachment E –MRP, Section V.B.3. If any three out of the initial test and the six accelerated test results exceed 1.0 TUc, the Discharger shall initiate a TIE and implement the Initial Investigation TRE Workplan, as specified in Attachment E – MRP, Sections V.D and V.E.

iv. The Discharger shall conduct chronic toxicity monitoring as specified in Attachment E – MRP.

5. Interim Effluent Limitations- Not Applicable.

Table 7. Interim Effluent Limitation for Discharge Point 005

Parameter	Units	Effluent Limitations

		Average Monthly	Maximum Daily	Instantaneous Minimum	Instantaneous Maximum
N/A					

Footnote:

B. Land Discharge Specifications

[Not Applicable.]

Table 8. Land Discharge Specifications

Parameter	Units	Discharge Specifications		
		Average Monthly	Maximum Daily	Average Annual
N/A	--	--	--	--

C. Reclamation Specifications

1. Approximately 60 percent of the treated wastewater is recycled and used on an annual basis for landscaping irrigation. Recycled water is also used at Tapia WRF, Pepperdine University, Rancho Las Virgenes Composting Facility and Rancho Las Virgenes Farm. The use of reclaimed water is regulated under Water Reclamation Requirements contained in Order No. 87-086. Order No. 87-086 was readopted on May 12, 1997, through General Order No. 97-072.

Table 9. Reclamation Discharge Specifications

Parameter	Units	Discharge Specifications		
		Average Monthly	Maximum Daily	Average Annual
N/A	--	--	--	--

VII. RECEIVING WATER LIMITATIONS

A. Surface Water Limitation

Receiving water limitations are based on water quality objectives contained in the Basin Plan and are a required part of this Order. The discharge shall not cause the following in the Malibu Creek or the Los Angeles River:

1. For waters designated with a warm freshwater habitat (WARM) beneficial use, the temperature of the receiving water at any time or place and within any given 24-hour period shall not be altered by more than 5°F above the natural temperature due to the discharge of effluent at the receiving water station located downstream of the discharge. Natural conditions shall be determined on a case-by-case basis.

2. The pH of inland surface waters shall not be depressed below 6.5 or raised above 8.5 as a result of wastes discharged. Ambient pH levels shall not be changed more than 0.5 units from natural conditions as a result of wastes discharged. Natural conditions shall be determined on a case-by-case basis.

3. For waters designated with a WARM beneficial use, the dissolved oxygen in the receiving water shall not be depressed below 5 mg/L as a result of the wastes discharged. For waters designated with a COLD beneficial use, the dissolved oxygen in the receiving water shall not be depressed below 6 mg/L as a result of the wastes discharged.

4. The fecal coliform concentration in the receiving water shall not exceed the following, as a result of wastes discharged:

   a. Geometric Mean Limits

      i. *E. Coli* density shall not exceed 126/100 mL.

      ii. Fecal coliform density shall not exceed 200/100 mL.

   b. Single Sample Limits

      i. *E. Coli* density shall not exceed 235/100 mL.

      ii. Fecal coliform density shall not exceed 400/100 mL.

5. Waters shall be free of changes in turbidity that cause nuisance or adversely affect beneficial uses. Increases in natural turbidity attributable to controllable water quality factors shall not exceed the following limits, as a result of wastes discharged:

a. Where natural turbidity is between 0 and 50 NTU, increases shall not exceed 20%, and

b. Where natural turbidity is greater than 50 NTU, increases shall not exceed 10%.

6. The wastes discharged shall not produce concentrations of toxic substances in the receiving water that are toxic to or cause detrimental physiological responses in human, animal, or aquatic life.

7. The wastes discharged shall not cause concentrations of contaminants to occur at levels that are harmful to human health in waters which are existing or potential sources of drinking water.

8. The concentrations of toxic pollutants in the water column, sediments, or biota shall not adversely affect beneficial uses as a result of the wastes discharged.

9. The wastes discharged shall not contain substances that result in increases in BOD, which adversely affect the beneficial uses of the receiving waters.

10. Waters shall not contain biostimulatory substances in concentrations that promote aquatic growth to the extent that such growth causes nuisance or adversely affects beneficial uses.

11. The wastes discharged shall not cause the receiving waters to contain any substance in concentrations that adversely affect any designated beneficial use.

12. The wastes discharged shall not alter the natural taste, odor, and color of fish, shellfish, or other surface water resources used for human consumption.

13. The wastes discharged shall not result in problems due to breeding of mosquitoes, gnats, black flies, midges, or other pests.

14. The wastes discharged shall not result in visible floating particulates, foams, and oil and grease in the receiving waters.

15. The wastes discharged shall not alter the color of the receiving waters; create a visual contrast with the natural appearance of the water; nor cause aesthetically undesirable discoloration of the receiving waters.

16. The wastes discharged shall not contain any individual pesticide or combination of pesticides in concentrations that adversely affect beneficial uses of the receiving waters. There shall be no increase in pesticide concentrations found in bottom sediments or aquatic life as a result of the wastes discharged.

17. The wastes discharged shall not contain radionuclides in concentrations that are deleterious to human, plant, animal, or aquatic life, or that result in accumulation of radionuclides in the food web to an extent that present a hazard to human, plant, animal, or aquatic life.

18. Acute Toxicity Receiving Water Quality Objective

    a. There shall be no acute toxicity in ambient waters as a result of wastes discharged.

    b. Receiving water and effluent toxicity testing shall be performed on the same day as close to concurrently as possible.

    c. The acute toxicity of the receiving water, at the monitoring location(s) immediately downstream of the discharge(s), including mixing zone shall be such that: (i) the average survival in the undiluted receiving water for any three (3) consecutive 96-hour static, static renewal, or continuous flow bioassay tests shall be at least 90%, and (ii) no single test produces less than 70% survival. Static-renewal bioassay tests may be used, as allowed by the most current USEPA test method for measuring acute toxicity.

    d. If the acute toxicity of the receiving water at the monitoring station immediately upstream of the discharge is greater than the acute toxicity of the receiving water at the monitoring station immediately downstream of the discharge, and the effluent acute toxicity is in compliance, then the acute toxicity accelerated monitoring in the receiving water according to Attachment E-MRP Section V.A.2.d does not apply.

19. Chronic Toxicity Receiving Water Quality Objective

    a. There shall be no chronic toxicity in ambient waters as a result of wastes discharged.

    b. Receiving water and effluent toxicity testing shall be performed on the same day as close to concurrently as possible.

    c. If the chronic toxicity in the receiving water at the monitoring station immediately downstream of the discharge exceeds the monthly median of 1.0 TUc trigger in a critical life stage test and the toxicity cannot be attributed to upstream toxicity, as assessed by the Discharger, then the Discharger shall immediately implement an accelerated chronic toxicity testing according to Attachment E – MRP Section V.B.3. If two of the six tests exceed a 1.0 TUc trigger, the Discharger shall initiate a TIE and implement the Initial Investigation TRE Workplan.

    d. If the chronic toxicity of the receiving water at the monitoring station(s) immediately upstream of the discharge is greater than that of the immediately

downstream monitoring station and the TUc of the effluent chronic toxicity test is less than or equal to a monthly median of 1 TUc trigger, then accelerated monitoring need not be implemented.

e. The Discharger shall conduct chronic toxicity monitoring as specified in MRP No. 4760.

20. These wastes discharged shall not cause the ammonia water quality objective in the Basin Plan to be exceeded in the receiving waters. Compliance with the ammonia water quality objectives shall be determined by comparing the receiving water ammonia concentration to the ammonia water quality objective in the Basin Plan. The ammonia water quality objective can also be calculated using the pH and temperature of the receiving water at the time of collection of the ammonia sample.

B. Groundwater Limitations

1. The discharge shall not cause the underlying groundwater to be degraded, to exceed water quality objectives, unreasonably affect beneficial uses, or cause a condition of pollution or nuisance.

VIII. PROVISIONS

A. Standard Provisions

1. The Discharger shall comply with all Standard Provisions included in Attachment D of this Order.

2. Regional Water Board-specific Standard Provisions. The Discharger shall comply with the following Regional Water Board-specific provisions:

   a. Neither the treatment nor the discharge of pollutants shall create pollution, contamination, or nuisance as defined by Section 13050 of the California Water Code.

      i. Odors, vectors, and other nuisances of sewage or sludge origin beyond the limits of the treatment plant site or the sewage collection system due to improper operation of facilities, as determined by the Regional Water Board, are prohibited.

      ii. All facilities used for collection, transport, treatment, or disposal of "wastes" shall be adequately protected against damage resulting from overflow, washout, or inundation from a storm or flood having a recurrence interval of once in 100 years.

      iii. Collection, treatment, and disposal systems shall be operated in a manner that precludes public contact with wastewater.

      iv. Collected screenings, sludges, and other solids removed from liquid wastes shall be disposed of in a manner approved by the Executive Officer of the Regional Water Board.

      v. The provisions of this order are severable. If any provision of this order is found invalid, the remainder of this Order shall not be affected.

      vi. Nothing in this permit shall be construed to preclude the institution of any legal action or relieve the discharger from any responsibilities, liabilities or penalties established pursuant to any applicable State law or regulation under authority preserved by Section 510 of the CWA.

      vii. Nothing in this permit shall be construed to preclude the institution of any legal action or relieve the discharger from any responsibilities, liabilities or penalties to which the discharger is or may be subject to under Section 311 of the CWA.

viii. The Discharger must comply with the lawful requirements of municipalities, counties, drainage districts, and other local agencies regarding discharges of storm water to storm drain systems or other water courses under their jurisdiction, including applicable requirements in municipal storm water management program developed to comply with NPDES permits issued by the Regional Water Board to local agencies.

ix. Discharge to wastes to any point other than specifically described in this Order is prohibited, and constitutes a violation thereof.

x. The Discharger shall comply with all applicable effluent limitations, national standards of performance, toxic effluent standards, and all federal regulations established pursuant to Sections 301, 302, 303(d), 304, 306, 307, 316, 403, and 405 of the Federal CWA and amendments thereto.

xi. These requirements do not exempt the operator of the waste disposal facility from compliance with any other laws, regulations, or ordinances which may be applicable; they do not legalize this waste disposal facility, and they leave unaffected any further restraints on the disposal of wastes at this site which may be contained in other statutes or required by other agencies.

xii. Oil or oily material, chemicals, refuse, or other polluting materials shall not be stored or deposited in areas where they may be picked up by rainfall and carried off of the property and/or discharged to surface waters. Any such spill of such materials shall be contained and removed immediately.

xiii. A copy of these waste discharge specifications shall be maintained at the discharge facility so as to be available at all times to operating personnel.

xiv. If there is any storage of hazardous or toxic materials or hydrocarbons at this facility and if the facility is not manned at all times, a 24-hour emergency response telephone number shall be prominently posted where it can easily be read from the outside.

xv. The Discharger shall file with the Regional Water Board a report of waste discharge at least 120 days before making any proposed change in the character, location or volume of the discharge.

xvi. In the event of any change in name, ownership, or control of these waste disposal facilities, the discharger shall notify the Regional Water Board of such change and shall notify the succeeding owner

or operator of the existence of this Order by letter, a copy of which shall be forwarded to the Regional Water Board.

xvii. California Water Code section 13385 provides that any person who violates a waste discharge requirement or a provision of the California Water Code is subject to civil penalties of up to $5,000 per day, $10,000 per day, or $25,000 per day of violation, or when the violation involves the discharge of pollutants, is subject to civil penalties of up to $10 per gallon per day or $25 per gallon per day of violation; or some combination thereof, depending on the violation, or upon the combination of violations. Violation of any of the provisions of the NPDES program or of any of the provisions of this Order may subject the violator to any of the penalties described herein, or any combination thereof, at the discretion of the prosecuting authority; except that only one kind of penalty may be applied for each kind of violation.

xviii. Pursuant to California Water Code13387(e), any person who knowingly makes any false statement, representation, or certification in any record or other document submitted or required to be maintained under this order, including monitoring reports or reports of compliance or noncompliance, or who knowingly falsifies, tampers with, or renders inaccurate any monitoring device or method required to be maintained in this order and is subject to a fine of not more than $25,000, imprisonment for not more than two years, or both. For a subsequent conviction, such a person shall be punished by a fine of not more than $25,000 per day of violation, by imprisonment of not more than four years, or by both.

xix. The discharge of any waste resulting from the combustion of toxic or hazardous wastes to any waste stream that ultimately discharges to waters of the United States is prohibited, unless specifically authorized elsewhere in this permit.

xx. The Discharger shall notify the Executive Officer in writing no later than 6 months prior to planned discharge of any chemical, other than the products previously reported to the Executive Officer, which may be toxic to aquatic life. Such notification shall include:

1. Name and general composition of the chemical,
2. Frequency of use,
3. Quantities to be used,
4. Proposed discharge concentrations, and

5. USEPA registration number, if applicable.

xxi. Failure to comply with provisions or requirements of this Order, or violation of other applicable laws or regulations governing discharges from this facility, may subject the Discharger to administrative or civil liabilities, criminal penalties, and/or other enforcement remedies to ensure compliance. Additionally, certain violations may subject the Discharger to civil or criminal enforcement from appropriate local, State, or federal law enforcement entities.

xxii. In the event the Discharger does not comply or will be unable to comply for any reason, with any prohibition, effluent limitation, or receiving water limitation of this Order, the Discharger shall notify the Watershed Regulatory Section Chief at the Regional Water Board by telephone at (213) 576-6616, or electronically at dhung@waterboards.ca.gov, within 24 hours of having knowledge of such noncompliance, and shall confirm this notification in writing to the Regional Water Board within five days, unless the Regional Water Board waives confirmation. The written notification shall state the nature, time, duration, and cause of non-compliance, and shall describe the measures being taken to remedy the current noncompliance, and the measures to prevent recurrence including, where applicable, a schedule of implementation. Other noncompliance requires written notification as above at the time of the normal monitoring report.

xxiii. Prior to making any change in the point of discharge, place of use, or purpose of use of treated wastewater that results in a decrease of flow in any portion of a watercourse, the Discharger must file a petition with the State Water Board, Division of Water Rights, and receive approval for such a change. (CWC § 1211.)

B. Monitoring and Reporting Program (MRP) Requirements

The Discharger shall comply with the MRP, and future revisions thereto, in Attachment E of this Order.

C. Special Provisions

1. Reopener Provisions

a. This Order may be modified, revoked and reissued, or terminated for cause, including, but not limited to:

(1) Violation of any term or condition contained in this Order;

(2) Obtaining this Order by misrepresentation, or by failure to disclose fully all relevant facts;

(3) A change in any condition that requires either a temporary or permanent reduction or elimination of the authorized discharge.

The filing of a request by the Discharger for an Order modification, revocation, and issuance or termination, or a notification of planned changes or anticipated noncompliances does not stay any condition of this Order.

b. This Order may be reopened and modified, in accordance with SIP section 2.2.2.A to incorporate the results of revised reasonable potential analyses to be conducted upon receipt of additional data.

c. This Order may be modified, in accordance with the provisions set forth in 40 C.F.R., Parts 122 and 124 to include requirements for the implementation of the watershed protection management approach.

d. The Board may modify, or revoke and reissue this Order if present or future investigations demonstrate that the discharge(s) governed by this Order will cause, have the potential to cause, or will contribute to adverse impacts on water quality and/or beneficial uses of the receiving waters.

e. This Order may also be modified, revoked, and reissued or terminated in accordance with the provisions of 40 C.F.R., parts 122.44, 122.62 to 122.64, 125.62, and 125.64. Causes for taking such actions include, but are not limited to, failure to comply with any condition of this Order, endangerment to human health or the environment resulting from the permitted activity, or acquisition of newly obtained information which would have justified the application of different conditions if known at the time of Order adoption. The filing of a request by the District for an Order modification, revocation and issuance or termination, or a notification of planned changes or anticipated noncompliance does not stay any condition of this Order.

f. This Order may be modified, in accordance with the provisions set forth in 40 C.F.R., parts 122 to 124, to include new MLs.

g. If an applicable toxic effluent standard or prohibition (including any schedule of compliance specified in such effluent standard or prohibition) is promulgated under section 307(a) of the CWA for a toxic pollutant and that standard or prohibition is more stringent than any limitation on the pollutant in this Order, the Regional Water Board may institute proceedings under these regulations to modify or revoke and reissue the Order to conform to the toxic effluent standard or prohibition.

h. The waste discharged shall not cause a violation of any applicable water quality standard for receiving waters. If more stringent applicable water quality standards

are promulgated or approved pursuant to Section 303 of the CWA, or amendments, thereto, the Regional Water Board will revise and modify this Order in accordance with such standards.

i. This Order may be reopened and modified to revise effluent limitations as a result of future Basin Plan Amendments, such as an update of a water quality objective, the adoption of a site specific objective, or the adoption of a TMDL for the Malibu Creek and Los Angeles River Watersheds.

j. This Order may be reopened and modified to revise the chronic toxicity effluent limitation or the residual chlorine effluent limitation, to the extent necessary, to be consistent with State Water Board precedential decisions, new policies, new laws, or new regulations.

k. This Order may be reopened to modify final effluent limits, if at the conclusion of necessary studies conducted by the Discharger, the Regional Water Board determines that dilution credits, attenuation factors, or metal translators are warranted.

2. Special Studies, Technical Reports and Additional Monitoring Requirements

a. Special Study - Constituents of Emerging Concern in Effluent

Background

Advancements in analytical technology over the last decade have dramatically increased the number of chemicals that can be detected and greatly decreased the concentrations at which chemicals can be detected. This new ability to detect trace levels of chemical concentrations has expanded the existing understanding of the kinds of contaminants present in the water and wastewater. Many man-made chemicals, particularly pesticides, pharmaceuticals and personal care products, have been found in waters across the United States.

Collectively, these compounds are referred to as Emerging Constituents (ECs) or Constituents of Emerging Concern (CECs) because their presence is starting to be revealed by rapid advances in analytical technology. Despite recent improvements in analytical science, there is still scarcity of data and lack of robust methodologies for measuring most CECs. CECs are part of the unregulated chemicals, for which no water quality standards have been established.

Recent publications and media reports on CECs have increased public awareness of the issue, providing an impetus for CEC investigations around the country, including local efforts by the City of Los Angeles and Southern California Coastal Water Research Project (SCCWRP). For instance, starting 2009, the City of Los Angeles has been conducting a special study as part of the Order No. 2005-0020, whose results suggest that the presence of natural and synthetic estrogen hormones has caused feminization of male fish (hornyhead turbot) in

Santa Monica Bay, especially near the Hyperion Treatment Plant outfall. In January 2010, SCCWRP convened a workshop where 50 scientists, water quality managers, and stakeholders discussed and collaborated on developing an effective CEC monitoring and management strategy that is protective of water quality. Anticipated outcomes of this workshop include recommended lists of CECs for monitoring in recycled water (for groundwater concerns) by end of 2010, and for monitoring in ambient waters, including ocean waters, by summer 2011.

In recent years, this Regional Water Board has incorporated monitoring of a select group of CECs into the NPDES permits issued to POTWs.

CEC Special Study Requirements

1. The Discharger shall initiate an investigation of CECs in the Discharger's effluent by conducting a special study. Specifically, within 6 months of the effective date of this Order, the Discharger shall develop a CEC Special Study Work Plan (Work Plan) and submit for approval by the Executive Officer of this Regional Water Board. Immediately upon approval of the Work Plan, the Discharger shall fully implement the Special Study.

   This Special Study Work Plan shall include, but not limited to, the following:

   i. Identification of CECs to be monitored in the effluent, sample type (e.g. 24-hour composite), sampling frequency, proposed sampling month, and sampling methodology. Table 18 identifies the minimum parameters to be monitored.

Table 18 – Effluent Monitoring of CECs

Parameter	Units	Sample Type	Minimum Sampling Frequency	Analytical Test Method and (Minimum Level, units)
17α-Ethinyl Estradiol	ng/L	To be proposed	Annually	To be proposed
17β-Estradiol	ng/L	To be proposed	Annually	To be proposed
Estrone	ng/L	To be proposed	Annually	To be proposed
Bisphenol A	ng/L	To be proposed	Annually	To be proposed
Nonylphenol and nonylphenol polyethoxylates	ng/L	To be proposed	Annually	To be proposed
Octylphenol and octylphenol polyethoxylates	ng/L	To be proposed	Annually	To be proposed
Polybrominated diphenyl ethers	ng/L	To be proposed	Annually	To be proposed
Acetaminophen	ng/L	To be proposed	Annually	To be proposed
Amoxicillin	ng/L	To be proposed	Annually	To be proposed
Azithromycin	ng/L	To be proposed	Annually	To be proposed
Carbamazepine	ng/L	To be proposed	Annually	To be proposed
Caffeine	ng/L	To be proposed	Annually	To be proposed
Ciprofloxacin	ng/L	To be proposed	Annually	To be proposed

Parameter	Units	Sample Type	Minimum Sampling Frequency	Analytical Test Method and (Minimum Level, units)
DEET	ng/L	To be proposed	Annually	To be proposed
Dilantin	ng/L	To be proposed	Annually	To be proposed
Gemfibrozil	ng/L	To be proposed	Annually	To be proposed
Ibuprofen	ng/L	To be proposed	Annually	To be proposed
Lipitor (Atorvastain)	ng/L	To be proposed	Annually	To be proposed
(Meprobamate	ng/L	To be proposed	Annually	To be proposed
Sulfamethoxazole	ng/L	To be proposed	Annually	To be proposed
Trimethoprim	ng/L	To be proposed	Annually	To be proposed
Salicylic acid	ng/L	To be proposed	Annually	To be proposed
TCEP	ng/L	To be proposed	Annually	To be proposed
Triclosan	ng/L	To be proposed	Annually	To be proposed

Once the SCCWRP's recommended list of CEC monitoring in ambient waters, including ocean waters, is finalized, the above list of minimum parameters to be monitored by the Discharger and the sampling frequency may be re-evaluated and modified by the Executive Officer. At such time, upon request by the Executive Officer, the Discharger shall monitor the requested CEC parameters at the specified frequency. In the Special Study Work Plan, the Discharger may also propose, for consideration and approval by the Executive Officer, surrogate or indicator CECs that may contribute towards a better understanding of CECs in its effluent.

Sample Type– The Discharger shall propose in the Work Plan the appropriate sample type (e.g. grab or composite) for each constituent.

Sampling Period– At minimum, the Discharger shall monitor the specified CECs once per year. The Work Plan shall propose the appropriate sampling month or quarter for each year, consistent with the goals of the analyses. The rationale for selecting the particular sampling month or quarter shall be explained in the Work Plan.

Proposed Sampling Month- The Discharger may choose a fixed month for sampling or vary the sampling month over the duration of the special study in order to examine possible temporal associations.

Analytical Test Methodology – The Discharger shall review and consider all available analytical test methodologies, including but not limited to those listed in USEPA Methods 1694 and 1698, and methodologies approved or utilized by U.S. Geologic Survey, California Department of Public Health, and other federal or State agencies. Based on its review, the Discharger shall propose the most appropriate analytical methodology, considering sensitivity, accuracy, availability, and cost.

ii. Characterization of existing CEC data (data collected previous to Special Study). The Discharger shall propose a characterization of all existing CEC data (associated with its effluent or receiving water) that have been collected for various purposes in the past. At minimum, the characterization shall include:

- an identification of all CECs monitored to date (outside of this Special Study);
- monitoring duration, frequency, and date(s) (for example, from 2000-present, annually);
- analytical methodologies employed;
- RL, MLs and MDLs achieved for each methodology used; and
- If detected, temporal/seasonal trend analyses (using both statistical and graphical demonstration) of CECs.

iii. Evaluation of CEC data collected as part of this Special Study. The Discharger shall propose an evaluation of CEC data (associated with its effluent) to be collected as part of this special study. At minimum, the characterization shall include:

- an identification of CECs that have been monitored;
- monitoring duration, frequency, and date(s);
- RL, MLs and MDLs achieved for each methodology used;
- a brief update on any improvements (or change) in the analytical methodologies and associated RL, MLs and MDLs achieved for each methodology used; and
- If detected, temporal/seasonal trend analyses (using both statistical and graphical demonstration) of cumulative CEC data collected as part of this special study.

2. Reporting – By April 15th of each year (starting April 15, 2012), the Discharger shall submit to the Executive Officer of this Regional Water Board, an annual report summarizing the monitoring results from the previous year. For example, the annual report due April 15, 2012 shall include CEC monitoring data from January to December 2011. Each annual report shall include a compilation of effluent monitoring data of CECs listed in the approved Work Plan, MLs, sample type, analytical methodology used, sampling date/time, QA/QC information, and an evaluation of cumulative CEC data collected to date as part of this special study (see above for further details on CEC data evaluation). In addition, the first annual report (due April 15, 2012) shall include a characterization of existing CEC data- i.e. all data collected outside of this special study (see above for further details on existing CEC data characterization.

b. Toxicity Reduction Requirements

The Discharger shall prepare and submit a copy of the Discharger's initial investigation Toxicity Reduction Evaluation (TRE) workplan to the Executive Officer of the Regional Water Board for approval within 90 days of the effective date of this permit. If the Executive Officer does not disapprove the workplan within 60 days from the date in which it was received, the workplan shall become effective. The Discharger shall use USEPA manual EPA/833B-99/002 (municipal) as guidance, or most current version. At a minimum, the initial investigation TRE workplan must contain the provisions in **Attachment G**. This workplan shall describe the steps the Discharger intends to follow if toxicity is detected, and should include, at a minimum:

(1) A description of the investigation and evaluation techniques that will be used to identify potential causes and sources of toxicity, effluent variability, and treatment system efficiency.

(2) A description of the facility's methods of maximizing in-house treatment efficiency and good housekeeping practices, and a list of all chemicals used in the operation of the facility; and,

(3) If a toxicity identification evaluation (TIE) is necessary, an indication of the person who would conduct the TIEs (i.e., an in-house expert or an outside contractor).

If the effluent toxicity test result exceeds the 1.0 TUc monthly median toxicity trigger, then the Discharger shall immediately implement accelerated toxicity testing that consists of six additional tests, approximately every two weeks, over a 12-week period. Effluent sampling for the first test of the six additional tests shall commence within 5 business days of receipt of the test results exceeding the toxicity trigger.

If the results of any two of the six tests (any two tests in a 12-week period) exceed the limitation, the Discharger shall initiate a Toxicity Reduction Evaluation (TRE).

If results of the implementation of the facility's initial investigation TRE workplan (as described above) indicate the need to continue the TRE/TIE, the Discharger shall expeditiously develop a more detailed TRE workplan for submittal to the Executive Officer within 15 days of completion of the initial investigation TRE.

Detailed toxicity testing and reporting requirements are contained in Section V of the MRP (Attachment E).

c. Treatment Plant Capacity

The Discharger shall submit a written report to the Executive Officer of the Regional Water Board within 90 days after the "30-day (monthly) average" daily dry-weather flow equals or exceeds 75 percent of the design capacity of waste treatment and/or disposal facilities. The Discharger's senior administrative officer shall sign a letter, which transmits that report and certifies that the discharger's policy-making body is adequately informed of the report's contents. The report shall include the following:

(1) The average daily flow for the month, the date on which the peak flow occurred, the rate of that peak flow, and the total flow for the day;

(2) The best estimate of when the monthly average daily dry-weather flow rate will equal or exceed the design capacity of the facilities; and

(3) A schedule for studies, design, and other steps needed to provide additional capacity for waste treatment and/or disposal facilities before the waste flow rate equals the capacity of present units.

This requirement is applicable to those facilities which have not reached 75 percent of capacity as of the effective date of this Order. For those facilities that have reached 75 percent of capacity by that date but for which no such report has been previously submitted, such report shall be filed within 90 days of the issuance of this Order.

3. Best Management Practices and Pollution Prevention

a. Storm Water Pollution Prevention Plan (SWPPP) – Not Applicable

b. Spill Clean-up Contingency Plan (SCP)

Within ninety days of the effective date of this Order, the Discharger is required to submit a Spill Clean-up Contingency Plan, which describes the activities and protocols, to address cleanup of spills, overflows, and bypasses of untreated or partially treated wastewater from the Discharger's collection system or treatment facilities, that reach water bodies, including dry channels and beach sands. At a minimum, the Plan shall include sections on spill clean-up and containment measures, public notification, and monitoring. The Discharger shall review and amend the Plan as appropriate after each spill from the facility or in the service area of the facility. The Discharger shall include a discussion in the annual summary report of any modifications to the Plan and the application of the Plan to all spills during the year.

c. Pollutant Minimization Program (PMP)

Reporting protocols in the Monitoring and Reporting Program, Attachment E, Section X.B.4 describe sample results that are to be reported as Detected but Not Quantified (DNQ) or Not Detected (ND). Definitions for a reported Minimum Level (ML) and Method Detection Limit (MDL) are provided in Attachment A. These reporting protocols and definitions are used in determining the need to conduct a Pollution Minimization Program (PMP) as follows:

The Discharger shall be required to develop and conduct a PMP as further described below when there is evidence (e.g., sample results reported as DNQ when the effluent limitation is less than the MDL, sample results from analytical methods more sensitive than those methods required by this Order, presence of whole effluent toxicity, health advisories for fish consumption, results of benthic or aquatic organism tissue sampling) that a priority pollutant is present in the effluent above an effluent limitation and either:

i. The concentration of the pollutant is reported as DNQ and the effluent limitation is less than the reported ML; or

ii. The concentration of the pollutant is reported as ND and the effluent limitation is less than the MDL.

The goal of the PMP shall be to reduce all potential sources of a pollutant through pollutant minimization (control) strategies, including pollution prevention measures as appropriate, to maintain the effluent concentration at or below the effluent limitation. Pollution prevention measures may be particularly appropriate for persistent bioaccumulative priority pollutants where there is evidence that beneficial uses are being impacted. The Regional Water Board may consider cost-effectiveness when establishing the requirements of a PMP. The completion and implementation of a Pollution Prevention Plan, if required pursuant to California Water Code section 13263.3(d), shall be considered to fulfill the PMP requirements.

The PMP shall include, but not be limited to, the following actions and submittals acceptable to the Regional Water Board:

i. An annual review and semi-annual monitoring of potential sources of the reportable priority pollutant(s), which may include fish tissue monitoring and other bio-uptake sampling;

ii. Quarterly monitoring for the reportable priority pollutant(s) in the influent to the wastewater treatment system;

iii. Submittal of a control strategy designed to proceed toward the goal of maintaining concentrations of the reportable priority pollutant(s) in the effluent at or below the effluent limitation;

iv. Implementation of appropriate cost-effective control measures for the reportable priority pollutant(s), consistent with the control strategy; and

v. An annual status report that shall be sent to the Regional Water Board including:

(a) All PMP monitoring results for the previous year;

a. A list of potential sources of the reportable pollutant(s);

b. A summary of all actions undertaken pursuant to the control strategy; and

c. A description of actions to be taken in the following year.

4. Construction, Operation and Maintenance Specifications

a. Wastewater treatment facilities subject to this Order shall be supervised and operated by persons possessing certificates of appropriate grade pursuant to section 13625 of the California Water Code.

b. The Discharger shall maintain in good working order a sufficient alternate power source for operating the wastewater treatment and disposal facilities. All equipment shall be located to minimize failure due to moisture, liquid spray, flooding, and other physical phenomena. The alternate power source shall be designed to permit inspection and maintenance and shall provide for periodic testing. If such alternate power source is not in existence, the discharger shall halt, reduce, or otherwise control all discharges upon the reduction, loss, or failure of the primary source of power.

5. Special Provisions for Municipal Facilities (POTWs Only)

a. Sludge Disposal Requirements

i. All sludge generated at the wastewater treatment plant will be disposed of, treated, or applied to land in accordance with federal regulations contained in 40 C.F.R. part 503, in general and in particular with the requirements in Attachment I of this Order, “Biosolids Use and Disposal Requirements”. These requirements are enforceable by USEPA.

ii. The Discharger shall ensure compliance with the requirements in STATE WATER BOARD Order No. 2004-10-DWQ, “General Waste Discharge Requirements for the Discharge of Biosolids to Land for Use as a Soil Amendment in Agricultural, Silvicultural, Horticultural and Land Reclamation Activities” for those sites receiving the Discharger’s biosolids which a Regional Water Board has placed under this general order, and with the requirements in individual Waste Discharge Requirements (WDRs) issued by a Regional Water Board for sites receiving the Discharger’s biosolids.

iii. The Discharger shall comply, if applicable, with WDRs issued by other Regional Water Boards to which jurisdiction the biosolids are transported and applied.

iv. The Discharger shall furnish this Regional Water Board with a copy of any report submitted to USEPA, State Water Board or other Regional Water Board, with respect to municipal sludge or biosolids.

b. Pretreatment Requirements

(1) This Order includes the Discharger's Pretreatment Program as previously submitted to this Regional Water Board. Any change to the Program shall be reported to the Regional Water Board in writing and shall not become effective until approved by the Executive Officer in accordance with procedures established in 40 C.F.R. part 403.18.

(2) The Discharger shall enforce the requirements promulgated under Sections 307(b), 307(c), 307(d), and 402(b) of the Federal Clean Water Act with timely, appropriate, and effective enforcement actions. The Discharger shall require industrial users to comply with Federal Categorical Standards and shall initiate enforcement actions against those users who do not comply with the standards. The Discharger shall require industrial users subject to the Federal Categorical Standards to achieve compliance no later than the date specified in those requirements or, in the case of a new industrial user, upon commencement of the discharge.

(3) The Discharger shall perform the pretreatment functions as required in 40 C.F.R. part 403 including, but not limited to:

A. Implement the necessary legal authorities as provided in 40 C.F.R. part 403.8(f)(1);

B. Enforce the pretreatment requirements under 40 C.F.R. parts 403.5 and 403.6;

C. Implement the programmatic functions as provided in 40 C.F.R. part 403.8(f)(2); and,

D. Provide the requisite funding of personnel to implement the Pretreatment Program as provided in 40 C.F.R. part 403.8(f)(3).

(4) The Discharger shall submit semiannual and annual reports to the Regional Water Board, with copies to the State Water Board and USEPA Region IX, describing the Discharger's pretreatment activities over the period. The annual and semiannual reports shall contain, but not be limited to the information required in the attached Pretreatment Reporting Requirements

(Attachment J), or an approved revised version thereof. If the Discharger is not in compliance with any conditions or requirements of this Order, the Discharger shall include the reasons for noncompliance and shall state how and when the Discharger will comply with such conditions and requirements.

(5) The Discharger shall be responsible and liable for the performance of all control authority pretreatment requirements contained in 40 C.F.R. part 403, including subsequent regulatory revisions thereof. Where part 403 or subsequent revisions places mandatory actions upon the Discharger as Control Authority but does not specify a timetable for completion of the actions, the Discharger shall complete the required actions within six months from the effective date of this Order or the effective date of part 403 revisions, whichever comes later. For violations of pretreatment requirements, the Discharger shall be subject to enforcement actions, penalties, fines, and other remedies by the Regional Water Board, USEPA, or other appropriate parties, as provided in the Federal Clean Water Act. The Regional Water Board or USEPA may initiate enforcement action against an industrial user for noncompliance with acceptable standards and requirements as provided in the Federal Clean Water Act and/or the California Water Code.

c. The Discharger's collection system is part of the system that is subject to this Order. As such, the Discharger must properly operate and maintain its collection system (40 C.F.R. § 122.41(e)). The Discharger must report any non-compliance (40 C.F.R. § 122.41(l), subsections (6) and (7)) and mitigate any discharge from the collection system in violation of this Order (40 C.F.R. § 122.41(d)). See Attachment D, subsections I.D, V.E, V.H, and I.C., and the following section (Spill Reporting Requirements) of this Order.

6. Spill Reporting Requirements

A. Notification

Although State and Regional Water Board staff do not have duties as first responders, this requirement is an appropriate mechanism to ensure that the agencies that do have first responder duties are notified in a timely manner in order to protect public health and beneficial uses. For certain spills, overflows and bypasses, the Discharger shall make notifications as required below:

1. In accordance with the requirements of Health and Safety Code section 5411.5, the discharger shall provide notification to the local health officer or the director of environmental health with jurisdiction over the affected water body of any unauthorized release of sewage or other waste that causes, or probably will cause a discharge to any waters of the State.

2. In accordance with the requirements of Water Code section 13271, the discharger shall provide notification to the California Emergency Management

Agency (Cal EMA) of the release of reportable amounts of hazardous substances or sewage that causes, or probably will cause a discharge to any waters of the State. The California Code of Regulations, Title 23, section 2250, defines a reportable amount of sewage as being 1,000 gallons. The phone number for reporting these releases to Cal EMA is (800) 852-7550.

3. The discharger shall notify the Regional Water Quality Control Board of any unauthorized release of sewage from its wastewater treatment plant that causes, or probably will cause a discharge to a water of the State as soon as possible, but not later than ***two (2)*** hours after becoming aware of the release. This notification does not need to be made if the discharger has notified Cal EMA. The phone number for reporting these releases of sewage to the Regional Water Quality Control Board is (213) 576-6657. At a minimum the following information shall be provided:

   a. The location, date and time of the release.

   b. The water body that received or will receive the discharge.

   c. An estimate of the amount of sewage or other waste released and the amount that reached a surface water at the time of notification.

   d. If ongoing, the estimated flow rate of the release at the time of the notification.

   e. The name, organization, phone number and email address of the reporting representative.

B. Monitoring

For certain spills, overflows and bypasses, the Discharger shall monitor as required below:

1. To define the geographical extent of spill's impact the Discharger shall obtain grab samples (if feasible, accessible, and safe) for spills, overflows or bypasses of any volume that reach receiving waters. The Discharger shall analyze the samples for total and fecal coliforms or *E. Coli*, and enterococcus, and relevant pollutants of concern, upstream and downstream of the point of entry of the spill (if feasible, accessible and safe). This monitoring shall be done on a daily basis from time the spill is known until the results of two consecutive sets of bacteriological monitoring indicate the return to the background level or the County Department of Public Health authorizes cessation of monitoring.

2. The Discharger shall obtain a grab sample (if feasible, accessible, and safe) for spills, overflows or bypasses of any volume that flowed to receiving

waters, entered a shallow ground water aquifer, or have the potential for public exposure; and for all spills, overflows or bypasses of 1,000 gallons or more. The Discharger shall characterize the sample for total and fecal coliforms or E. coli, and enterococcus, and analyze relevant pollutants of concern depending on the area and nature of spills or overflows if feasible, accessible and safe.

C. Reporting

The Regional Water Board initial notification shall be followed by:

1. As soon as possible, but **not later than twenty four (24) hours** after becoming aware of an unauthorized discharge of sewage or other waste from its wastewater treatment plant to a water of the State, the discharger shall submit a statement to the Regional Water Quality Control Board by email at aanijielo@waterboards.ca.gov . If the discharge is 1,000 gallons or more, this statement shall certify that the Cal EMA has been notified of the discharge in accordance with Water Code section 13271. The statement shall also certify that the local health officer or director of environmental health with jurisdiction over the affected water bodies has been notified of the discharge in accordance with Health and Safety Code section 5411.5. The statement shall also include at a minimum the following information:

   (i) Agency, NPDES No., Order No., and MRP CI No., if applicable.

   (ii) The location, date, and time of the discharge.

   (iii) The water body that received the discharge.

   (iv) A description of the level of treatment of the sewage or other waste discharged.

   (v) An initial estimate of the amount of sewage or other waste released and the amount that reached a surface water.

   (vi) The Cal EMA control number and the date and time that notification of the incident was provided to the Cal EMA.

   (vii) The name of the local health officer or director of environmental health representative notified (if contacted directly); the date and time of notification; and the method of notification (e.g., phone, fax, email).

2 A written preliminary report five working days after disclosure of the incident (submission to the Regional Water Board of the log number of the Sanitary Sewer Overflow database entry shall satisfy this requirement). Within 30

days after submitting the preliminary report, the Discharger shall submit the final written report to this Regional Water Board. (A copy of the final written report, for a given incident, already submitted pursuant to a Statewide General Waste Discharge Requirements for Wastewater Collection System Agencies, may be submitted to the Regional Water Board to satisfy this requirement.) The written report shall document the information required in paragraph D. below, monitoring results and any other information required in provisions of the Standard Provisions document including corrective measures implemented or proposed to be implemented to prevent/minimize future occurrences. The Executive Officer for just cause can grant an extension for submittal of the final written report.

2. The Discharger shall include a certification in the annual summary report (due according to the schedule in the Monitoring and Reporting Program) stating that the sewer system emergency equipment, including alarm systems, backup pumps, standby power generators, and other critical emergency pump station components were maintained and tested in accordance with the Discharger's Preventative Maintenance Plan. Any deviations from or modifications to the Plan shall be discussed.

D. Records

The Discharger shall develop and maintain a record of all spills, overflows or bypasses of raw or partially treated sewage from its collection system or treatment plant. This record shall be made available to the Regional Water Board upon request and a spill summary shall be included in the annual summary report. The records shall contain:

1. the date and time of each spill, overflow or bypass;
2. the location of each spill, overflow or bypass;
3. the estimated volume of each spill, overflow or bypass including gross volume, amount recovered and amount not recovered, monitoring results as required by Section VI.C.6.B;
4. the cause of each spill, overflow or bypass;
5. whether each spill, overflow or bypass entered a receiving water and, if so, the name of the water body and whether it entered via storm drains or other man-made conveyances;
6. mitigation measures implemented; and,
7. corrective measures implemented or proposed to be implemented to prevent/minimize future occurrences.

E. Activities Coordination

In addition, Regional Water Board expects that the POTW's owners/operators will coordinate their compliance activities for consistency and efficiency with other

entities that have responsibilities to implement: (i) this NPDES permit, including the Pretreatment Program, (ii) a MS4 NPDES permit that may contain spill prevention, sewer maintenance, and reporting requirements and (iii) the SSO WDR.

F. Consistency with Sanitary Sewer Overflows WDRs

The Clean Water Act prohibits the discharge of pollutants from point sources to surface waters of the United States unless authorized under a NPDES permit. (33 U.S.C. §§1311, 1342). The State Water Board adopted General Waste Discharge Requirements (WDRs) for Sanitary Sewer Systems, (WQ Order No. 2006- 0003) on May 2, 2006, to provide a consistent, statewide regulatory approach to address Sanitary Sewer Overflows (SSOs). The SSOs WDR requires public agencies that own or operate sanitary sewer systems to develop and implement sewer system management plans and report all SSOs to the State Water Board's online SSOs database.

The requirements contained in this Order in Sections VI.C.3.b. (Spill Contingency Plan Section), VI.C.4. (Construction, Operation and Maintenance Specifications Section), and VI.C.6. (Spill Reporting Requirements) are intended to be consistent with the requirements of the SSOs WDR and as outlined in the letter dated September 9, 2008 (Modification to Monitoring and Reporting Program). The Regional Water Board recognizes that there may be some overlap between the NPDES permit provisions and SSOs WDR requirements. The requirements of the SSOs WDR are considered the minimum thresholds (see Finding 11 of WQ Order No. 2006-0003). The Regional Water Board will accept the documentation prepared by the Permittees under the SSOs WDR for compliance purposes, as satisfying the requirements in Sections VI.C.3.b., VI.C.4., and VI.C.6. provided that any more specific or stringent provisions enumerated in this Order, have also been addressed.

G. Emergency Power Facilities

The Discharger shall provide standby or emergency power facilities and/or storage capacity or other means so that in the event of plant upset or outage due to power failure or other cause, discharge of raw or inadequately treated sewage does not occur.

7. Compliance Schedules- Not Applicable.

IX. COMPLIANCE DETERMINATION

Compliance with the effluent limitations contained in section IV of this Order will be determined as specified below:

A. General.

Compliance with effluent limitations for priority pollutants shall be determined using sample reporting protocols defined in the MRP and Attachment A of this Order. For purposes of reporting and administrative enforcement by the Regional and State Water Boards, the Discharger shall be deemed out of compliance with effluent limitations if the concentration of the priority pollutant in the monitoring sample is greater than the effluent limitation and greater than or equal to the reporting level (RL).

B. Multiple Sample Data

When determining compliance with a measure of central tendency (arithmetic mean, geometric mean, median, etc.) of multiple sample analyses, if the data set contains one or more reported determinations of "Detected, but Not Quantified" (DNQ) or "Not Detected" (ND), the Discharger shall compute the median in place of the arithmetic mean in accordance with the following procedure:

1. The data set shall be ranked from low to high, ranking the reported ND determinations lowest, DNQ determinations next, followed by quantified values (if any). The order of the individual ND or DNQ determinations is unimportant.

2. The median value of the data set shall be determined. If the data set has an odd number of data points, then the median is the middle value. If the data set has an even number of data points, then the median is the average of the two values around the middle unless one or both of the points are ND or DNQ, in which case the median value shall be the lower of the two data points where DNQ is lower than a value and ND is lower than DNQ.

C. Average Monthly Effluent Limitation (AMEL)

If the average (or when applicable, the median determined by subsection B above for multiple sample data) of daily discharges over a calendar month exceeds the AMEL for a given parameter, this will represent a single violation, though the Discharger may be considered out of compliance for each day of that month for that parameter (e.g., resulting in 31 days of non-compliance in a 31-day month). If only a single sample is taken during the calendar month and the analytical result for that sample exceeds the AMEL, the Discharger may be considered out of compliance for that calendar month. The Discharger will only be considered out of compliance for days when the discharge occurs. For any one calendar month during which no sample (daily discharge) is taken, no compliance determination can be made for that calendar month with respect to the AMEL.

If the analytical result of a single sample, monitored monthly, quarterly, semiannually, or annually, does not exceed the AMEL for a given parameter, the Discharger will have demonstrated compliance with the AMEL for each day of that month for that parameter.

If the analytical result of any single sample, monitored monthly, quarterly, semiannually, or annually, exceeds the AMEL for any parameter, the Discharger shall collect up to four additional samples within the same calendar month. All analytical results shall be reported in the monitoring report for that month. The concentration of pollutant (an arithmetic mean or a median) in these samples estimated from the "Multiple Sample Data Reduction" Section above, will be used for compliance determination.

In the event of noncompliance with an AMEL, the sampling frequency for that parameter shall be increased to weekly and shall continue at this level until compliance with the AMEL has been demonstrated.

D. Average Weekly Effluent Limitation (AWEL)

If the average of daily discharges over a calendar week exceeds the AWEL for a given parameter, an alleged violation will be flagged and the discharger will be considered out of compliance for each day of that week for that parameter, resulting in 7 days of non-compliance. The average of daily discharges over the calendar week that exceeds the AWEL for a parameter will be considered out of compliance for that week only. If only a single sample is taken during the calendar week and the analytical result for that sample exceeds the AWEL, the discharger will be considered out of compliance for that calendar week. For any one calendar week during which no sample (daily discharge) is taken, no compliance determination can be made for that calendar week with respect to the AWEL.

A calendar week will begin on Sunday and end on Saturday. Partial weeks consisting of four or more days at the end of any month will include the remaining days of the week, which occur in the following month in order to calculate a consecutive seven-day average. This value will be reported as a weekly average or seven-day average on the SMR for the month containing the partial week of four or more days. Partial calendar weeks consisting of less than four days at the end of any month will be carried forward to the succeeding month and reported as a weekly average or a seven-day average for the calendar week that ends with the first Saturday of that month.

E. Maximum Daily Effluent Limitation (MDEL)

If a daily discharge exceeds the MDEL for a given parameter, an alleged violation will be flagged and the discharger will be considered out of compliance for that parameter for that 1 day only within the reporting period. For any 1 day during which no sample is taken, no compliance determination can be made for that day with respect to the MDEL.

F. Instantaneous Minimum Effluent Limitation.

If the analytical result of a single grab sample is lower than the instantaneous minimum effluent limitation for a parameter, a violation will be flagged and the discharger will be considered out of compliance for that parameter for that single sample. Non-compliance for each sample will be considered separately (e.g., the results of two grab samples

taken within a calendar day that both are lower than the instantaneous minimum effluent limitation would result in two instances of non-compliance with the instantaneous minimum effluent limitation).

G. Instantaneous Maximum Effluent Limitation.

If the analytical result of a single grab sample is higher than the instantaneous maximum effluent limitation for a parameter, a violation will be flagged and the discharger will be considered out of compliance for that parameter for that single sample. Non-compliance for each sample will be considered separately (e.g., the results of two grab samples taken within a calendar day that both exceed the instantaneous maximum effluent limitation would result in two instances of non-compliance with the instantaneous maximum effluent limitation).

H. Six-month Median Effluent Limitation.

If the median of daily discharges over any 180-day period exceeds the six-month median effluent limitation for a given parameter, an alleged violation will be flagged and the discharger will be considered out of compliance for each day of that 180-day period for that parameter. The next assessment of compliance will occur after the next sample is taken. If only a single sample is taken during a given 180-day period and the analytical result for that sample exceeds the six-month median, the discharger will be considered out of compliance for the 180-day period. For any 180-period during which no sample is taken, no compliance determination can be made for the six-month median effluent limitation.

I. Percent Removal

The average monthly percent removal is the removal efficiency expressed in percentage across a treatment plant for a given pollutant parameter, as determined from the 30-day average values of pollutant concentrations (C in mg/L) of influent and effluent samples collected at about the same time using the following equation:
Percent Removal (%) = $[1-(C_{Effluent}/ C_{Influent})] \times 100$ %
When preferred, the Discharger may substitute mass loadings and mass emissions for the concentrations.

J. Mass and Concentration Limitations

Compliance with mass and concentration effluent limitations for the same parameter shall be determined separately with their respective limitations. When the concentration of a constituent in an effluent sample is determined to be ND or DNQ, the corresponding mass emission rate determined from that sample concentration shall also be reported as ND or DNQ.

K. Compliance with single constituent effluent limitations

Dischargers are out of compliance with the effluent limitation if the concentration of the pollutant (see Section B "Multiple Sample Data Reduction" above) in the monitoring sample is greater than the effluent limitation and greater than or equal to the RML.

L. Compliance with effluent limitations expresses as sum of several constituents

Dischargers are out of compliance with an effluent limitation which applies to the sum of a group of chemicals (e.g., PCB's) if the sum of the individual pollutant concentrations is greater than the effluent limitation. Individual pollutants of the group will be considered to have a concentration of zero if the constituent is reported as ND or DNQ.

M. Mass Emission Rate

The mass emission rate shall be obtained from the following calculation for any calendar day:

$$\text{Mass emission rate (lb/day)} = \frac{8.34}{N} \sum_{i=1}^{N} Q_i C_i$$

$$\text{Mass emission rate (kg/day)} = \frac{3.79}{N} \sum_{i=1}^{N} Q_i C_i$$

in which 'N' is the number of samples analyzed in any calendar day. 'Qi' and 'Ci' are the flow rate (MGD) and the constituent concentration (mg/L), respectively, which are associated with each of the 'N' grab samples, which may be taken in any calendar day. If a composite sample is taken, 'Ci' is the concentration measured in the composite sample and 'Qi' is the average flow rate occurring during the period over which samples are composited.

The daily concentration of all constituents shall be determined from the flow-weighted average of the same constituents in the combined waste streams as follows:

$$\text{Daily concentration} = \frac{1}{Q_t} \sum_{i=1}^{N} Q_i C_i$$

in which 'N' is the number of component waste streams. 'Qi' and 'Ci' are the flow rate (MGD) and the constituent concentration (mg/L), respectively, which are associated with each of the 'N' waste streams. 'Qt' is the total flow rate of the combined waste streams.

N. Bacterial Standards and Analysis

1. The geometric mean used for determining compliance with bacterial standards is calculated with the following equation:

$$\text{Geometric Mean} = (C1 \times C2 \times \ldots \times Cn)^{1/n}$$

where n is the number of days samples were collected during the period and C is the concentration of bacteria (MPN/100 mL or CFU/100 mL) found on each day of sampling.

2. For bacterial analyses, sample dilutions should be performed so the expected range of values is bracketed (for example, with multiple tube fermentation method or membrane filtration method, 2 to 16,000 per 100 ml for total and fecal coliform, at a minimum, and 1 to 1000 per 100 ml for enterococcus). The detection methods used for each analysis shall be reported with the results of the analyses.

3. Detection methods used for coliforms (total and fecal) shall be those presented in Table 1A of 40 C.F.R. part 136 (revised March 12, 2007), unless alternate methods have been approved by USEPA pursuant to 40 C.F.R. part 136, or improved methods have been determined by the Executive Officer and/or USEPA.

4. Detection methods used for enterococcus shall be those presented in the USEPA publication EPA 600/4-85/076, *Test Methods for Escherichia coli and Enterococci in Water By Membrane Filter Procedure* or any improved method determined by the Executive Officer and/or USEPA to be appropriate.

O. Single Operational Upset

A single operational upset (SOU) that leads to simultaneous violations of more than one pollutant parameter shall be treated as a single violation and limits the Discharger's liability in accordance with the following conditions:

1. A single operational upset is broadly defined as a single unusual event that temporarily disrupts the usually satisfactory operation of a system in such a way that it results in violation of multiple pollutant parameters.

2. A Discharger may assert SOU to limit liability only for those violations which the Discharger submitted notice of the upset as required in Provision V.E.2(b) of Attachment D – Standard Provisions.

3. For purpose outside of California Water Code section 13385, subsections (h) and (i), determination of compliance and civil liability (including any more specific definition of SOU, the requirements for Dischargers to assert the SOU limitation of liability, and the manner of counting violations) shall be in accordance with USEPA Memorandum "Issuance of Guidance Interpreting Single Operational Upset" (September 27, 1989).

4. For purpose of California Water Code section 13385, subsections (h) and (i), determination of compliance and civil liability (including any more specific definition of SOU, the requirements for Dischargers to assert the SOU limitation of liability, and

the manner of counting violations) shall be in accordance with California Water Code Section 13385 (f)(2).

ATTACHMENT A – DEFINITIONS

Arithmetic Mean (μ)
Also called the average, is the sum of measured values divided by the number of samples. For ambient water concentrations, the arithmetic mean is calculated as follows:

Arithmetic mean = $\mu = \Sigma x / n$ where: Σx is the sum of the measured ambient water concentrations, and n is the number of samples.

Average Monthly Effluent Limitation (AMEL)
The highest allowable average of daily discharges over a calendar month, calculated as the sum of all daily discharges measured during a calendar month divided by the number of daily discharges measured during that month.

Average Weekly Effluent Limitation (AWEL)
The highest allowable average of daily discharges over a calendar week (Sunday through Saturday), calculated as the sum of all daily discharges measured during a calendar week divided by the number of daily discharges measured during that week.

Bioaccumulative
Those substances taken up by an organism from its surrounding medium through gill membranes, epithelial tissue, or from food and subsequently concentrated and retained in the body of the organism.

Carcinogenic
Pollutants are substances that are known to cause cancer in living organisms.

Coefficient of Variation (CV)
CV is a measure of the data variability and is calculated as the estimated standard deviation divided by the arithmetic mean of the observed values.

Daily Discharge
Daily Discharge is defined as either: (1) the total mass of the constituent discharged over the calendar day (12:00 am through 11:59 pm) or any 24-hour period that reasonably represents a calendar day for purposes of sampling (as specified in the permit), for a constituent with limitations expressed in units of mass or; (2) the unweighted arithmetic mean measurement of the constituent over the day for a constituent with limitations expressed in other units of measurement (e.g., concentration).

The daily discharge may be determined by the analytical results of a composite sample taken over the course of one day (a calendar day or other 24-hour period defined as a day) or by the arithmetic mean of analytical results from one or more grab samples taken over the course of the day.

For composite sampling, if 1 day is defined as a 24-hour period other than a calendar day, the analytical result for the 24-hour period will be considered as the result for the calendar day in which the 24-hour period ends.

Detected, but Not Quantified (DNQ)
DNQ are those sample results less than the RL, but greater than or equal to the laboratory's MDL.

Dilution Credit
Dilution Credit is the amount of dilution granted to a discharge in the calculation of a water quality-based effluent limitation, based on the allowance of a specified mixing zone. It is calculated from the dilution ratio or determined through conducting a mixing zone study or modeling of the discharge and receiving water.

Effluent Concentration Allowance (ECA)
ECA is a value derived from the water quality criterion/objective, dilution credit, and ambient background concentration that is used, in conjunction with the coefficient of variation for the effluent monitoring data, to calculate a long-term average (LTA) discharge concentration. The ECA has the same meaning as waste load allocation (WLA) as used in USEPA guidance (Technical Support Document For Water Quality-based Toxics Control, March 1991, second printing, EPA/505/2-90-001).

Enclosed Bays
Enclosed Bays means indentations along the coast that enclose an area of oceanic water within distinct headlands or harbor works. Enclosed bays include all bays where the narrowest distance between the headlands or outermost harbor works is less than 75 percent of the greatest dimension of the enclosed portion of the bay. Enclosed bays include, but are not limited to, Humboldt Bay, Bodega Harbor, Tomales Bay, Drake's Estero, San Francisco Bay, Morro Bay, Los Angeles-Long Beach Harbor, Upper and Lower Newport Bay, Mission Bay, and San Diego Bay. Enclosed bays do not include inland surface waters or ocean waters.

Estimated Chemical Concentration
The estimated chemical concentration that results from the confirmed detection of the substance by the analytical method below the ML value.

Estuaries
Estuaries means waters, including coastal lagoons, located at the mouths of streams that serve as areas of mixing for fresh and ocean waters. Coastal lagoons and mouths of streams that are temporarily separated from the ocean by sandbars shall be considered estuaries. Estuarine waters shall be considered to extend from a bay or the open ocean to a point upstream where there is no significant mixing of fresh water and seawater. Estuarine waters included, but are not limited to, the Sacramento-San Joaquin Delta, as defined in California Water Code section 12220, Suisun Bay, Carquinez Strait downstream to the Carquinez Bridge, and appropriate areas of the Smith, Mad, Eel, Noyo, Russian, Klamath, San Diego, and Otay rivers. Estuaries do not include inland surface waters or ocean waters.

Inland Surface Waters
All surface waters of the State that do not include the ocean, enclosed bays, or estuaries.

Instantaneous Maximum Effluent Limitation
The highest allowable value for any single grab sample or aliquot (i.e., each grab sample or aliquot is independently compared to the instantaneous maximum limitation).

Instantaneous Minimum Effluent Limitation
The lowest allowable value for any single grab sample or aliquot (i.e., each grab sample or aliquot is independently compared to the instantaneous minimum limitation).

Maximum Daily Effluent Limitation (MDEL)
The highest allowable daily discharge of a pollutant, over a calendar day (or 24-hour period). For pollutants with limitations expressed in units of mass, the daily discharge is calculated as the total mass of the pollutant discharged over the day. For pollutants with limitations expressed in other units of measurement, the daily discharge is calculated as the arithmetic mean measurement of the pollutant over the day.

Median
The middle measurement in a set of data. The median of a set of data is found by first arranging the measurements in order of magnitude (either increasing or decreasing order). If the number of measurements (n) is odd, then the median = $X_{(n+1)/2}$. If n is even, then the median = $(X_{n/2} + X_{(n/2)+1})/2$ (i.e., the midpoint between the $n/2$ and $n/2+1$).

Method Detection Limit (MDL)
MDL is the minimum concentration of a substance that can be measured and reported with 99 percent confidence that the analyte concentration is greater than zero, as defined in title 40 of the Code of Federal Regulations, Part 136, Attachment B, revised as of July 3, 1999.

Minimum Level (ML)
ML is the concentration at which the entire analytical system must give a recognizable signal and acceptable calibration point. The ML is the concentration in a sample that is equivalent to the concentration of the lowest calibration standard analyzed by a specific analytical procedure, assuming that all the method specified sample weights, volumes, and processing steps have been followed.

Mixing Zone
Mixing Zone is a limited volume of receiving water that is allocated for mixing with a wastewater discharge where water quality criteria can be exceeded without causing adverse effects to the overall water body.

Not Detected (ND)
Sample results which are less than the laboratory's MDL.

Ocean Waters
The territorial marine waters of the State as defined by California law to the extent these waters are outside of enclosed bays, estuaries, and coastal lagoons. Discharges to ocean waters are regulated in accordance with the State Water Board's California Ocean Plan.

Persistent Pollutants
Persistent pollutants are substances for which degradation or decomposition in the environment is nonexistent or very slow.

Pollutant Minimization Program (PMP)
PMP means waste minimization and pollution prevention actions that include, but are not limited to, product substitution, waste stream recycling, alternative waste management methods, and education of the public and businesses. The goal of the PMP shall be to reduce all potential sources of a priority pollutant(s) through pollutant minimization (control) strategies, including pollution prevention measures as appropriate, to maintain the effluent concentration at or below the water quality-based effluent limitation. Pollution prevention measures may be particularly appropriate for persistent bioaccumulative priority pollutants where there is evidence that beneficial uses are being impacted. The Regional Water Board may consider cost effectiveness when establishing the requirements of a PMP. The completion and implementation of a Pollution Prevention Plan, if required pursuant to California Water Code section 13263.3(d), shall be considered to fulfill the PMP requirements.

Pollution Prevention
Pollution Prevention means any action that causes a net reduction in the use or generation of a hazardous substance or other pollutant that is discharged into water and includes, but is not limited to, input change, operational improvement, production process change, and product reformulation (as defined in California Water Code section 13263.3). Pollution prevention does not include actions that merely shift a pollutant in wastewater from one environmental medium to another environmental medium, unless clear environmental benefits of such an approach are identified to the satisfaction of the State or Regional Water Board.

Reporting Level (RL)
RL is the ML (and its associated analytical method) chosen by the Discharger for reporting and compliance determination from the MLs included in this Order. The MLs included in this Order correspond to approved analytical methods for reporting a sample result that are selected by the Regional Water Board either from Appendix 4 of the SIP in accordance with section 2.4.2 of the SIP or established in accordance with section 2.4.3 of the SIP. The ML is based on the proper application of method-based analytical procedures for sample preparation and the absence of any matrix interferences. Other factors may be applied to the ML depending on the specific sample preparation steps employed. For example, the treatment typically applied in cases where there are matrix-effects is to dilute the sample or sample aliquot by a factor of ten. In such cases, this additional factor must be applied to the ML in the computation of the RL.

Satellite Collection System

The portion, if any, of a sanitary sewer system owned or operated by a different public agency than the agency that owns and operates the wastewater treatment facility that a sanitary sewer system is tributary to.

Source of Drinking Water
Any water designated as municipal or domestic supply (MUN) in a Regional Water Board Basin Plan.

Standard Deviation (σ)
Standard Deviation is a measure of variability that is calculated as follows:

$$\sigma = (\sum[(x - \mu)^2]/(n - 1))^{0.5}$$

where:
x is the observed value;
μ is the arithmetic mean of the observed values; and
n is the number of samples.

Toxicity Reduction Evaluation (TRE)
TRE is a study conducted in a step-wise process designed to identify the causative agents of effluent or ambient toxicity, isolate the sources of toxicity, evaluate the effectiveness of toxicity control options, and then confirm the reduction in toxicity. The first steps of the TRE consist of the collection of data relevant to the toxicity, including additional toxicity testing, and an evaluation of facility operations and maintenance practices, and best management practices. A Toxicity Identification Evaluation (TIE) may be required as part of the TRE, if appropriate. (A TIE is a set of procedures to identify the specific chemical(s) responsible for toxicity. These procedures are performed in three phases (characterization, identification, and confirmation) using aquatic organism toxicity tests.)

ATTACHMENT B-1 – MAP OF LAS VIRGENES-TRIUNFO JOINT POWERS AUTHORITY (JPA) SERVICE AREA

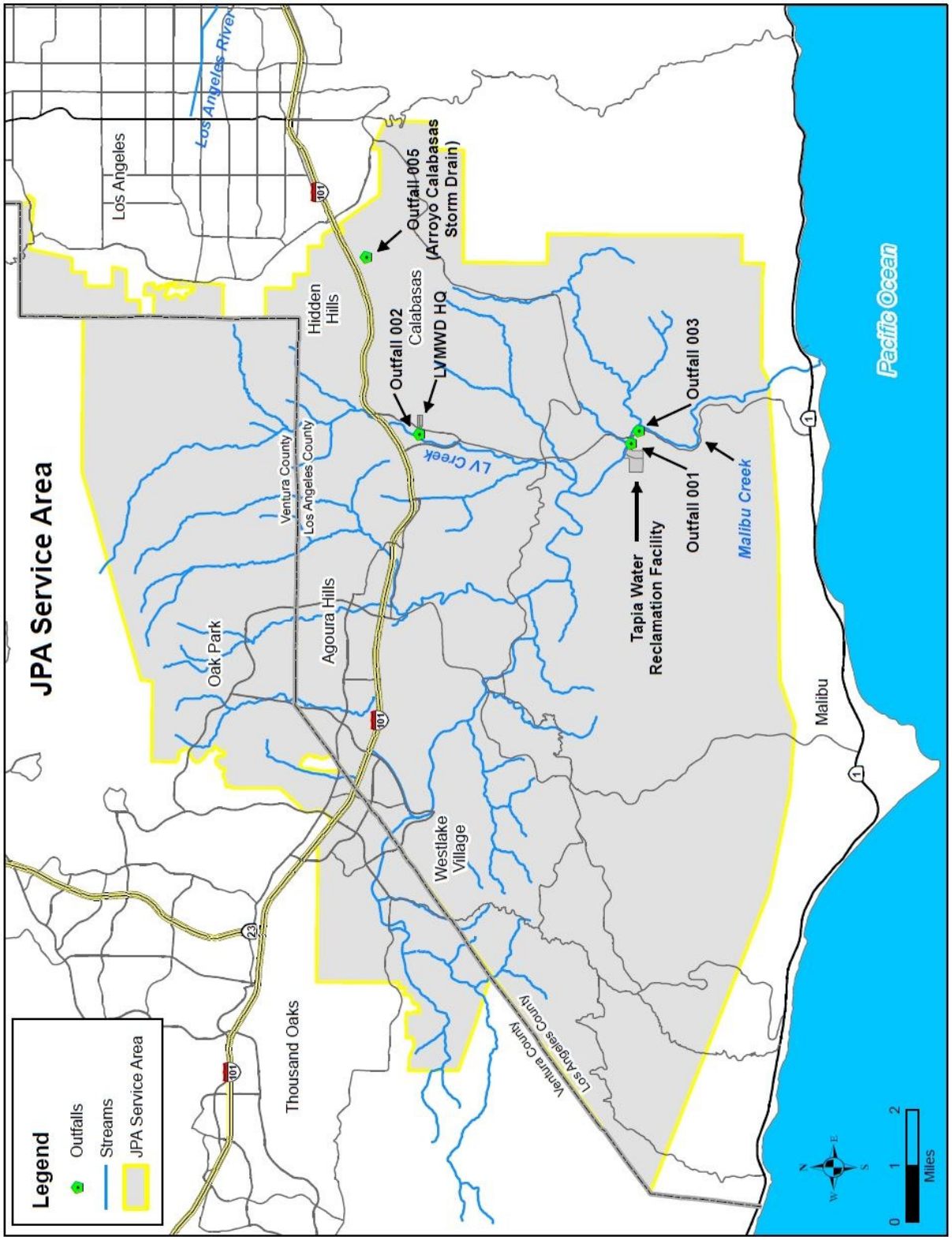

ATTACHMENT B-2 – TOPOGRAPHIC MAP OF TAPIA WATER RECLAMATION FACILITY

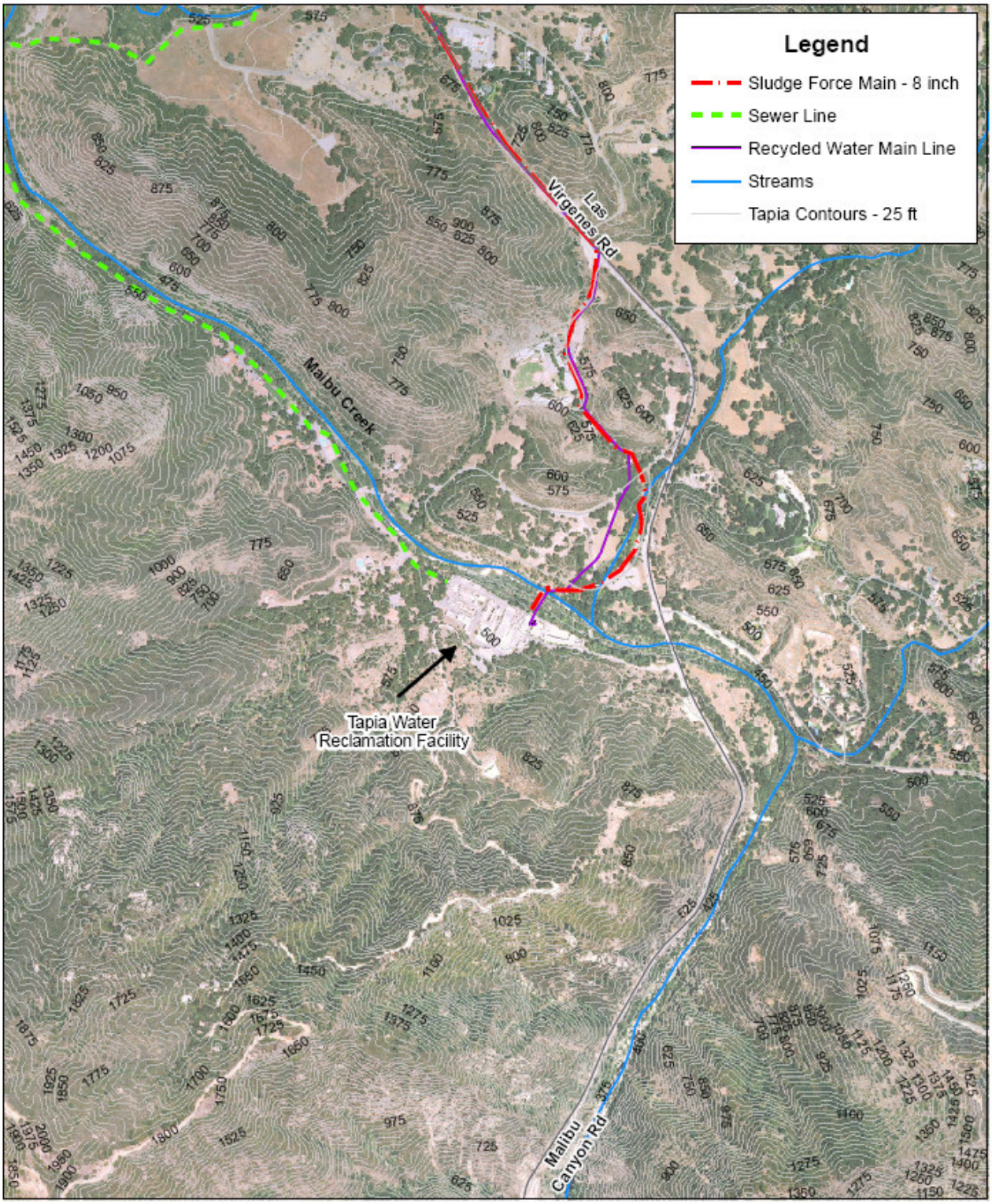

0 500 1,000
Feet

Tapia Water Reclamation Facility

N W E S

ATTACHMENT C-1 – FLOW SCHEMATIC

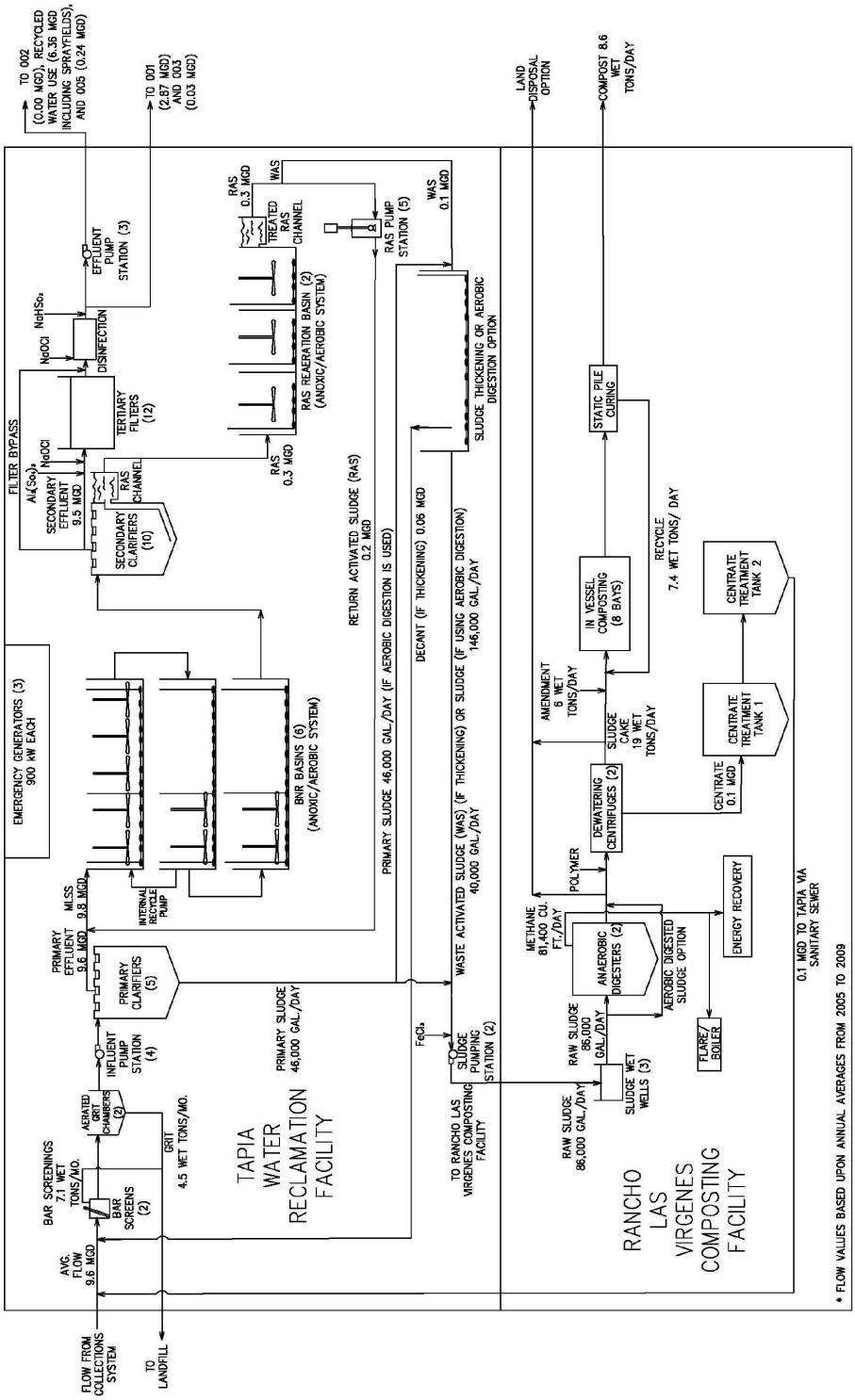

ATTACHMENT C-2 MAP OF RECEIVING WATER MONITORING STATIONS ALONG MALIBU CREEK.

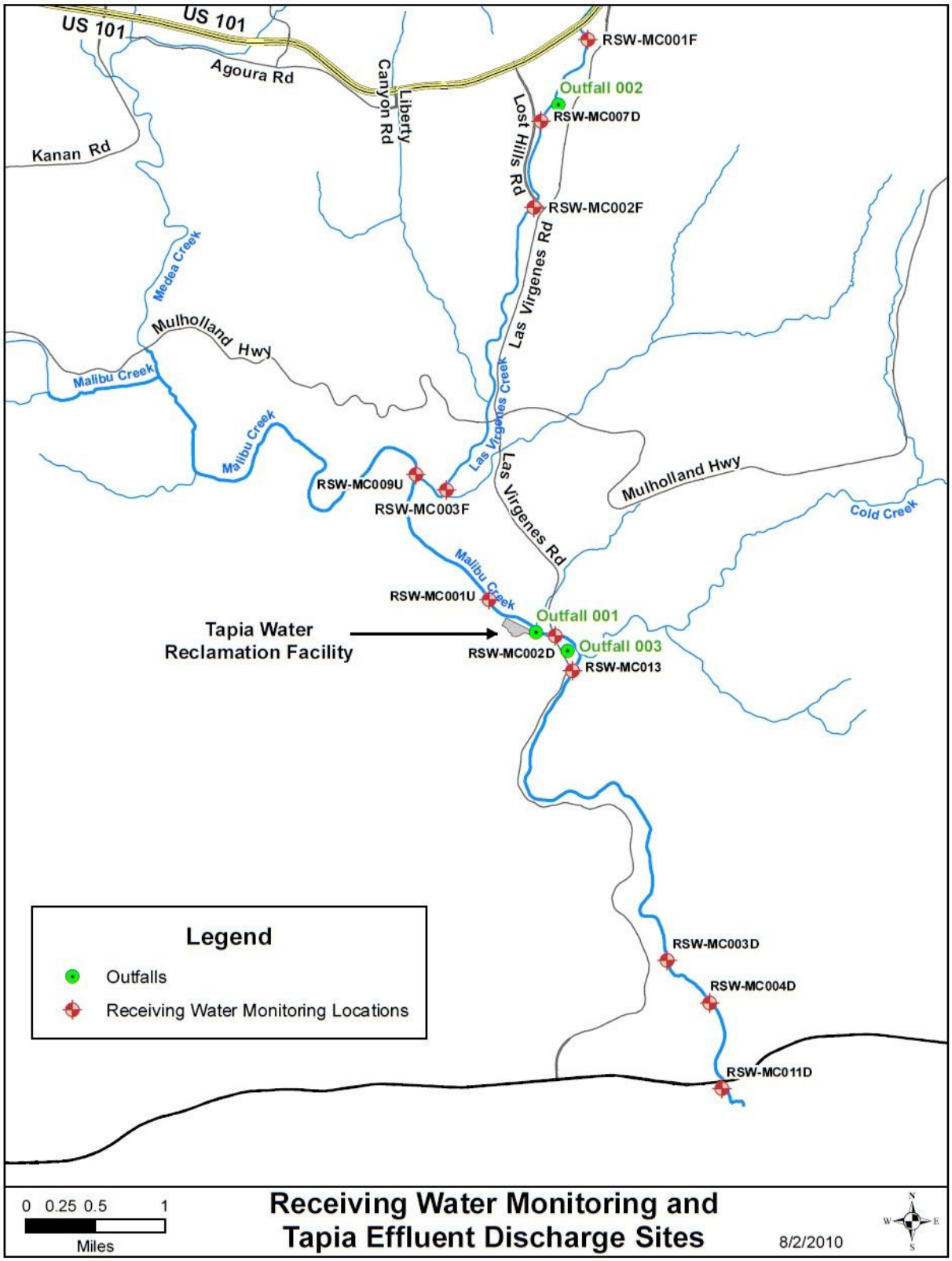

ATTACHMENT C-3. MAP OF OUTFALLS AND RECYCLED WATER CONVEYANCE SYSTEM

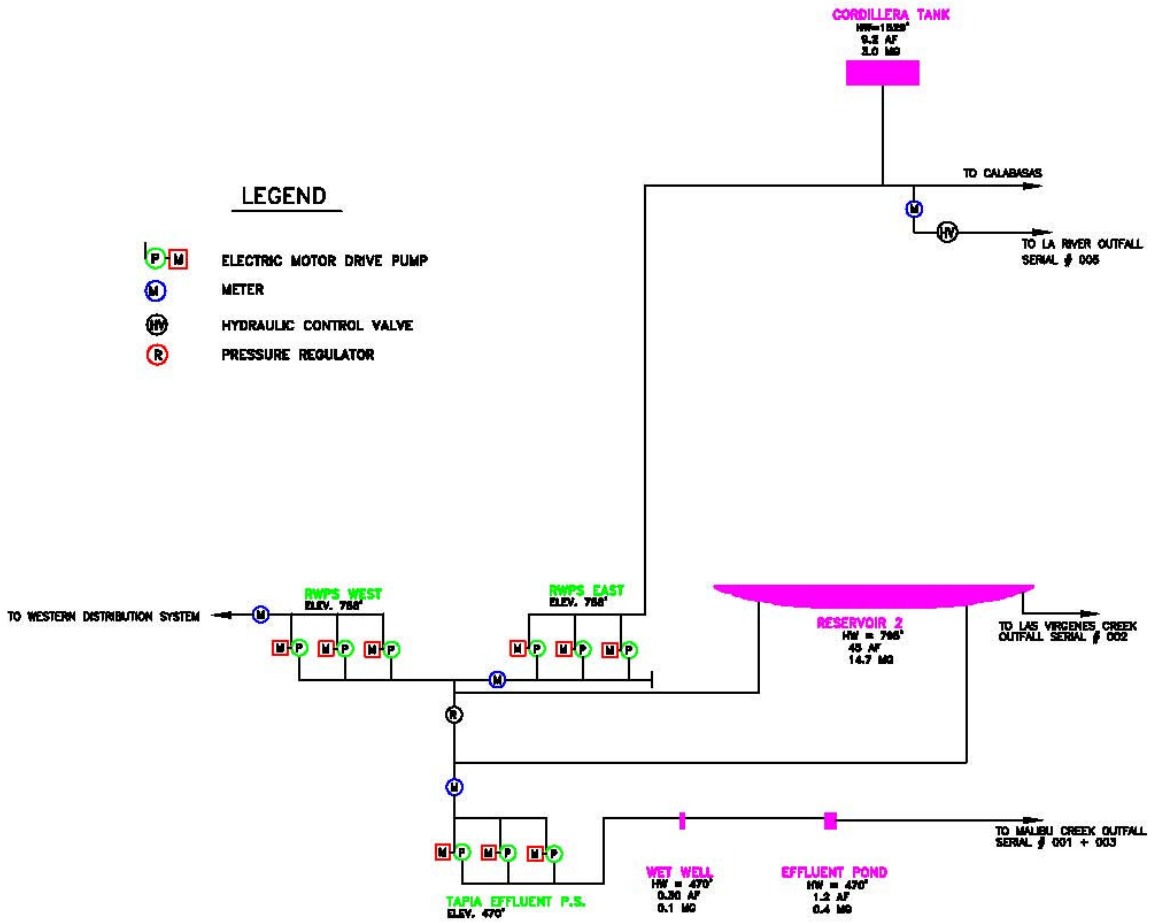

ATTACHMENT D – STANDARD PROVISIONS

I. STANDARD PROVISIONS – PERMIT COMPLIANCE

A. Duty to Comply

1. The Discharger must comply with all of the conditions of this Order. Any noncompliance constitutes a violation of the Clean Water Act (CWA) and the California Water Code and is grounds for enforcement action, for permit termination, revocation and reissuance, or modification; or denial of a permit renewal application. (40 C.F.R. § 122.41(a).)

2. The Discharger shall comply with effluent standards or prohibitions established under Section 307(a) of the CWA for toxic pollutants and with standards for sewage sludge use or disposal established under Section 405(d) of the CWA within the time provided in the regulations that establish these standards or prohibitions, even if this Order has not yet been modified to incorporate the requirement. (40 C.F.R. § 122.41(a)(1).)

B. Need to Halt or Reduce Activity Not a Defense

It shall not be a defense for a Discharger in an enforcement action that it would have been necessary to halt or reduce the permitted activity in order to maintain compliance with the conditions of this Order (40 C.F.R. § 122.41(c).)

C. Duty to Mitigate

The Discharger shall take all reasonable steps to minimize or prevent any discharge or sludge use or disposal in violation of this Order that has a reasonable likelihood of adversely affecting human health or the environment. (40 C.F.R. § 122.41(d).)

D. Proper Operation and Maintenance

The Discharger shall at all times properly operate and maintain all facilities and systems of treatment and control (and related appurtenances) which are installed or used by the Discharger to achieve compliance with the conditions of this Order. Proper operation and maintenance also includes adequate laboratory controls and appropriate quality assurance procedures. This provision requires the operation of backup or auxiliary facilities or similar systems that are installed by a Discharger only when necessary to achieve compliance with the conditions of this Order. (40 C.F.R. § 122.41(e).)

E. Property Rights

1. This Order does not convey any property rights of any sort or any exclusive privileges. (40 C.F.R. § 122.41(g).)

2. The issuance of this Order does not authorize any injury to persons or property or invasion of other private rights, or any infringement of State or local law or regulations. (40 C.F.R. § 122.5(c).)

F. Inspection and Entry

The Discharger shall allow the Regional Water Board, State Water Board, United States Environmental Protection Agency (USEPA), and/or their authorized representatives (including an authorized contractor acting as their representative), upon the presentation of credentials and other documents, as may be required by law, to (40 C.F.R. § 122.41(i); CWC § 13383):

1. Enter upon the Discharger's premises where a regulated facility or activity is located or conducted, or where records are kept under the conditions of this Order (40 C.F.R. § 122.41(i)(1));

2. Have access to and copy, at reasonable times, any records that must be kept under the conditions of this Order (40 C.F.R. § 122.41(i)(2));

3. Inspect and photograph, at reasonable times, any facilities, equipment (including monitoring and control equipment), practices, or operations regulated or required under this Order (40 C.F.R. § 122.41(i)(3)); and

4. Sample or monitor, at reasonable times, for the purposes of assuring Order compliance or as otherwise authorized by the CWA or the California Water Code, any substances or parameters at any location. (40 C.F.R. § 122.41(i)(4).)

G. Bypass

1. Definitions

   a. “Bypass” means the intentional diversion of waste streams from any portion of a treatment facility. (40 C.F.R. § 122.41(m)(1)(i).)

   b. “Severe property damage” means substantial physical damage to property, damage to the treatment facilities, which causes them to become inoperable, or substantial and permanent loss of natural resources that can reasonably be expected to occur in the absence of a bypass. Severe property damage does not mean economic loss caused by delays in production. (40 C.F.R. § 122.41(m)(1)(ii).)

2. Bypass not exceeding limitations. The Discharger may allow any bypass to occur which does not cause exceedances of effluent limitations, but only if it is for essential maintenance to assure efficient operation. These bypasses are not subject to the provisions listed in Standard Provisions – Permit Compliance I.G.3, I.G.4, and I.G.5 below. (40 C.F.R. § 122.41(m)(2).)

3. Prohibition of bypass. Bypass is prohibited, and the Regional Water Board may take enforcement action against a Discharger for bypass, unless (40 C.F.R. § 122.41(m)(4)(i)):

   a. Bypass was unavoidable to prevent loss of life, personal injury, or severe property damage (40 C.F.R. § 122.41(m)(4)(i)(A));

   b. There were no feasible alternatives to the bypass, such as the use of auxiliary treatment facilities, retention of untreated wastes, or maintenance during normal periods of equipment downtime. This condition is not satisfied if adequate back-up equipment should have been installed in the exercise of reasonable engineering judgment to prevent a bypass that occurred during normal periods of equipment downtime or preventive maintenance (40 C.F.R. § 122.41(m)(4)(i)(B)); and

   c. The Discharger submitted notice to the Regional Water Board as required under Standard Provisions – Permit Compliance I.G.5 below. (40 C.F.R. § 122.41(m)(4)(i)(C).)

4. The Regional Water Board may approve an anticipated bypass, after considering its adverse effects, if the Regional Water Board determines that it will meet the three conditions listed in Standard Provisions – Permit Compliance I.G.3 above. (40 C.F.R. § 122.41(m)(4)(ii).)

5. Notice

   a. Anticipated bypass. If the Discharger knows in advance of the need for a bypass, it shall submit a notice, if possible at least 10 days before the date of the bypass. (40 C.F.R. § 122.41(m)(3)(i).)

   b. Unanticipated bypass. The Discharger shall submit notice of an unanticipated bypass as required in Standard Provisions - Reporting V.E below (24-hour notice). (40 C.F.R. § 122.41(m)(3)(ii).)

H. Upset

Upset means an exceptional incident in which there is unintentional and temporary noncompliance with technology based permit effluent limitations because of factors beyond the reasonable control of the Discharger. An upset does not include noncompliance to the extent caused by operational error, improperly designed treatment facilities, inadequate treatment facilities, lack of preventive maintenance, or careless or improper operation. (40 C.F.R. § 122.41(n)(1).)

1. Effect of an upset. An upset constitutes an affirmative defense to an action brought for noncompliance with such technology based permit effluent limitations if the requirements of Standard Provisions – Permit Compliance I.H.2 below are met. No

determination made during administrative review of claims that noncompliance was caused by upset, and before an action for noncompliance, is final administrative action subject to judicial review. (40 C.F.R. § 122.41(n)(2).)

2. Conditions necessary for a demonstration of upset. A Discharger who wishes to establish the affirmative defense of upset shall demonstrate, through properly signed, contemporaneous operating logs or other relevant evidence that (40 C.F.R. § 122.41(n)(3)):

   a. An upset occurred and that the Discharger can identify the cause(s) of the upset (40 C.F.R. § 122.41(n)(3)(i));

   b. The permitted facility was, at the time, being properly operated (40 C.F.R. § 122.41(n)(3)(ii));

   c. The Discharger submitted notice of the upset as required in Standard Provisions – Reporting V.E.2.b below (24-hour notice) (40 C.F.R. § 122.41(n)(3)(iii)); and

   d. The Discharger complied with any remedial measures required under Standard Provisions – Permit Compliance I.C above. (40 C.F.R. § 122.41(n)(3)(iv).)

3. Burden of proof. In any enforcement proceeding, the Discharger seeking to establish the occurrence of an upset has the burden of proof. (40 C.F.R. § 122.41(n)(4).)

II. STANDARD PROVISIONS – PERMIT ACTION

A. General

This Order may be modified, revoked and reissued, or terminated for cause. The filing of a request by the Discharger for modification, revocation and reissuance, or termination, or a notification of planned changes or anticipated noncompliance does not stay any Order condition. (40 C.F.R. § 122.41(f).)

B. Duty to Reapply

If the Discharger wishes to continue an activity regulated by this Order after the expiration date of this Order, the Discharger must apply for and obtain a new permit. (40 C.F.R. § 122.41(b).)

C. Transfers

This Order is not transferable to any person except after notice to the Regional Water Board. The Regional Water Board may require modification or revocation and reissuance of the Order to change the name of the Discharger and incorporate such other requirements as may be necessary under the CWA and the California Water Code. (40 C.F.R. §§ 122.41(l)(3), 122.61.)

III. STANDARD PROVISIONS – MONITORING

A. Samples and measurements taken for the purpose of monitoring shall be representative of the monitored activity. (40 C.F.R. § 122.41(j)(1).)

B. Monitoring results must be conducted according to test procedures under Part 136 or, in the case of sludge use or disposal, approved under Part 136 unless otherwise specified in Part 503 unless other test procedures have been specified in this Order. (40 C.F.R. §§ 122.41(j)(4), 122.44(i)(1)(iv).)

IV. STANDARD PROVISIONS – RECORDS

A. Except for records of monitoring information required by this Order related to the Discharger's sewage sludge use and disposal activities, which shall be retained for a period of at least five years (or longer as required by Part 503), the Discharger shall retain records of all monitoring information, including all calibration and maintenance records and all original strip chart recordings for continuous monitoring instrumentation, copies of all reports required by this Order, and records of all data used to complete the application for this Order, for a period of at least three (3) years from the date of the sample, measurement, report or application. This period may be extended by request of the Regional Water Board Executive Officer at any time. (40 C.F.R. § 122.41(j)(2).)

B. Records of monitoring information shall include:

1. The date, exact place, and time of sampling or measurements (40 C.F.R. § 122.41(j)(3)(i));
2. The individual(s) who performed the sampling or measurements (40 C.F.R. § 122.41(j)(3)(ii));
3. The date(s) analyses were performed (40 C.F.R. § 122.41(j)(3)(iii));
4. The individual(s) who performed the analyses (40 C.F.R. § 122.41(j)(3)(iv));
5. The analytical techniques or methods used (40 C.F.R. § 122.41(j)(3)(v)); and
6. The results of such analyses. (40 C.F.R. § 122.41(j)(3)(vi).)

C. Claims of confidentiality for the following information will be denied (40 C.F.R. § 122.7(b)):

1. The name and address of any permit applicant or Discharger (40 C.F.R. § 122.7(b)(1)); and
2. Permit applications and attachments, permits and effluent data. (40 C.F.R. § 122.7(b)(2).)

V. STANDARD PROVISIONS – REPORTING

A. Duty to Provide Information

The Discharger shall furnish to the Regional Water Board, State Water Board, or USEPA within a reasonable time, any information which the Regional Water Board, State Water Board, or USEPA may request to determine whether cause exists for modifying, revoking and reissuing, or terminating this Order or to determine compliance with this Order. Upon request, the Discharger shall also furnish to the Regional Water Board, State Water Board, or USEPA copies of records required to be kept by this Order. (40 C.F.R. § 122.41(h); CWC § 13267.)

B. Signatory and Certification Requirements

1. All applications, reports, or information submitted to the Regional Water Board, State Water Board, and/or USEPA shall be signed and certified in accordance with Standard Provisions – Reporting V.B.2, V.B.3, V.B.4, and V.B.5 below. (40 C.F.R. § 122.41(k).)

2. All permit applications shall be signed by either a principal executive officer or ranking elected official. For purposes of this provision, a principal executive officer of a federal agency includes: (i) the chief executive officer of the agency, or (ii) a senior executive officer having responsibility for the overall operations of a principal geographic unit of the agency (e.g., Regional Administrators of USEPA). (40 C.F.R. § 122.22(a)(3).).

3. All reports required by this Order and other information requested by the Regional Water Board, State Water Board, or USEPA shall be signed by a person described in Standard Provisions – Reporting V.B.2 above, or by a duly authorized representative of that person. A person is a duly authorized representative only if:

a. The authorization is made in writing by a person described in Standard Provisions – Reporting V.B.2 above (40 C.F.R. § 122.22(b)(1));

b. The authorization specifies either an individual or a position having responsibility for the overall operation of the regulated facility or activity such as the position of plant manager, operator of a well or a well field, superintendent, position of equivalent responsibility, or an individual or position having overall responsibility for environmental matters for the company. (A duly authorized representative may thus be either a named individual or any individual occupying a named position.) (40 C.F.R. § 122.22(b)(2)); and

c. The written authorization is submitted to the Regional Water Board and State Water Board. (40 C.F.R. § 122.22(b)(3).)

4. If an authorization under Standard Provisions – Reporting V.B.3 above is no longer accurate because a different individual or position has responsibility for the overall operation of the facility, a new authorization satisfying the requirements of Standard Provisions – Reporting V.B.3 above must be submitted to the Regional Water Board and State Water Board prior to or together with any reports, information, or applications, to be signed by an authorized representative. (40 C.F.R. § 122.22(c))

5. Any person signing a document under Standard Provisions – Reporting V.B.2 or V.B.3 above shall make the following certification:

"I certify under penalty of law that this document and all attachments were prepared under my direction or supervision in accordance with a system designed to assure that qualified personnel properly gather and evaluate the information submitted. Based on my inquiry of the person or persons who manage the system or those persons directly responsible for gathering the information, the information submitted is, to the best of my knowledge and belief, true, accurate, and complete. I am aware that there are significant penalties for submitting false information, including the possibility of fine and imprisonment for knowing violations." (40 C.F.R. § 122.22(d).)

C. Monitoring Reports

1. Monitoring results shall be reported at the intervals specified in the Monitoring and Reporting Program (Attachment E) in this Order. (40 C.F.R. § 122.22(l)(4).)

2. Monitoring results must be reported on a Discharge Monitoring Report (DMR) form or forms provided or specified by the Regional Water Board or State Water Board for reporting results of monitoring of sludge use or disposal practices. (40 C.F.R. § 122.41(l)(4)(i).)

3. If the Discharger monitors any pollutant more frequently than required by this Order using test procedures approved under Part 136 or, in the case of sludge use or disposal, approved under Part 136 unless otherwise specified in Part 503, or as specified in this Order, the results of this monitoring shall be included in the calculation and reporting of the data submitted in the DMR or sludge reporting form specified by the Regional Water Board. (40 C.F.R. § 122.41(l)(4)(ii).)

4. Calculations for all limitations, which require averaging of measurements, shall utilize an arithmetic mean unless otherwise specified in this Order. (40 C.F.R. § 122.41(l)(4)(iii).)

D. Compliance Schedules

Reports of compliance or noncompliance with, or any progress reports on, interim and final requirements contained in any compliance schedule of this Order, shall be

submitted no later than 14 days following each schedule date. (40 C.F.R. § 122.41(l)(5).)

E. Twenty-Four Hour Reporting

1. The Discharger shall report to the Regional Water Board any noncompliance that may endanger health or the environment. Any information shall be provided orally within 24 hours from the time the Discharger becomes aware of the circumstances. A written submission shall also be provided within five (5) days of the time the Discharger becomes aware of the circumstances. The written submission shall contain a description of the noncompliance and its cause; the period of noncompliance, including exact dates and times, and if the noncompliance has not been corrected, the anticipated time it is expected to continue; and steps taken or planned to reduce, eliminate, and prevent reoccurrence of the noncompliance. (40 C.F.R. § 122.41(l)(6)(i).)

2. The following shall be included as information that must be reported within 24 hours under this paragraph (40 C.F.R. § 122.41(l)(6)(ii)):

   a. Any unanticipated bypass that exceeds any effluent limitation in this Order. (40 C.F.R. § 122.41(l)(6)(ii)(A).)

   b. Any upset that exceeds any effluent limitation in this Order. (40 C.F.R. § 122.41(l)(6)(ii)(B).)

3. The Regional Water Board may waive the above-required written report under this provision on a case-by-case basis if an oral report has been received within 24 hours. (40 C.F.R. § 122.41(l)(6)(iii).)

F. Planned Changes

The Discharger shall give notice to the Regional Water Board as soon as possible of any planned physical alterations or additions to the permitted facility. Notice is required under this provision only when (40 C.F.R. § 122.41(l)(1)):

1. The alteration or addition to a permitted facility may meet one of the criteria for determining whether a facility is a new source in part 122.29(b) (40 C.F.R. § 122.41(l)(1)(i)); or

2. The alteration or addition could significantly change the nature or increase the quantity of pollutants discharged. This notification applies to pollutants that are not subject to effluent limitations in this Order. (40 C.F.R. § 122.41(l)(1)(ii).)

3. The alteration or addition results in a significant change in the Discharger's sludge use or disposal practices, and such alteration, addition, or change may justify the application of permit conditions that are different from or absent in the existing permit, including notification of additional use or disposal sites not reported during

the permit application process or not reported pursuant to an approved land application plan. (40 C.F.R.§ 122.41(l)(1)(iii).)

G. Anticipated Noncompliance

The Discharger shall give advance notice to the Regional Water Board or State Water Board of any planned changes in the permitted facility or activity that may result in noncompliance with General Order requirements. (40 C.F.R. § 122.41(l)(2).)

H. Other Noncompliance

The Discharger shall report all instances of noncompliance not reported under Standard Provisions – Reporting V.C, V.D, and V.E above at the time monitoring reports are submitted. The reports shall contain the information listed in Standard Provision – Reporting V.E above. (40 C.F.R. § 122.41(l)(7).)

I. Other Information

When the Discharger becomes aware that it failed to submit any relevant facts in a permit application, or submitted incorrect information in a permit application or in any report to the Regional Water Board, State Water Board, or USEPA, the Discharger shall promptly submit such facts or information. (40 C.F.R. § 122.41(l)(8).)

VI. STANDARD PROVISIONS – ENFORCEMENT

A. The Regional Water Board is authorized to enforce the terms of this permit under several provisions of the California Water Code, including, but not limited to, sections 13385, 13386, and 13387.

VII. ADDITIONAL PROVISIONS – NOTIFICATION LEVELS

A. Publicly-Owned Treatment Works (POTWs)

All POTWs shall provide adequate notice to the Regional Water Board of the following (40 C.F.R. § 122.42(b)):

1. Any new introduction of pollutants into the POTW from an indirect discharger that would be subject to sections 301 or 306 of the CWA if it were directly discharging those pollutants (40 C.F.R. § 122.42(b)(1)); and

2. Any substantial change in the volume or character of pollutants being introduced into that POTW by a source introducing pollutants into the POTW at the time of adoption of the Order. (40 C.F.R. § 122.42(b)(2).)

3. Adequate notice shall include information on the quality and quantity of effluent introduced into the POTW as well as any anticipated impact of the change on the quantity or quality of effluent to be discharged from the POTW. (40 C.F.R. § 122.42(b)(3).)

ATTACHMENT E – MONITORING AND REPORTING PROGRAM

Table of Contents

I. General Monitoring Provisions E-2
II. Monitoring Locations E-7
III. Influent Monitoring Requirements E-9
  A. Monitoring Location INF-001 ..... E-9
IV. Effluent Monitoring Requirements E-11
  A. Monitoring Location EFF-001 ..... E-11
V. Whole Effluent Toxicity Testing Requirements E-16
  A. Acute Toxicity E-16
VI. Land Discharge Monitoring Requirements E-24
VII. Reclamation Monitoring Requirements E-24
VIII. Receiving Water Monitoring Requirements – Surface Water and groundwater E-24
  A. Monitoring Location RSW-001U and RSW-002D E-24
  B. Monitoring Location RGW-001 ..... E-30
IX. Other Monitoring Requirements E-31
X. Reporting Requirements E-37
  A. General Monitoring and Reporting Requirements E-37
  B. Self Monitoring Reports (SMRs) E-38
  C. Discharge Monitoring Reports (DMRs) E-40
  D. Other Reports E-40

List of Tables

Table E-1. Monitoring Station Locations E-7
Table E-2. Influent Monitoring E-9
Table E-3. Effluent Monitoring E-12
Table E-7a. Receiving Water Monitoring Requirements E-24
Table E-7b. Receiving Ground Water Monitoring Requirements E-30
Table E-8 Effluent Monitoring of CECs E-25
Table E-9. Monitoring Periods and Reporting Schedule E-38

ATTACHMENT E – MONITORING AND REPORTING PROGRAM (MRP)

The Code of Federal Regulations, title 40, Part 122.48 requires that all NPDES permits specify monitoring and reporting requirements. California Water Code sections 13267 and 13383 also authorize the Regional Water Quality Control Board (Regional Water Board) to require technical and monitoring reports. This MRP establishes monitoring and reporting requirements, which implement the federal and California regulations.

I. GENERAL MONITORING PROVISIONS

A. All samples shall be representative of the waste discharge under conditions of peak load. Quarterly effluent analyses shall be performed during the months of January, April, July, and October. Semiannual analyses shall be performed during the months of January and July. Annual analyses shall be performed during the month of July (except for bioassessment monitoring, which will be conducted in the spring/summer; and, algal biomass, which will be conducted concurrently with the bioassessment monitoring). Biennial analyses shall be performed during the month of August. Should there be instances when monitoring could not be done during these specified months, the Discharger must notify the Regional Water Board, state the reason why monitoring could not be conducted, and obtain approval from the Executive Officer for an alternate schedule. Results of quarterly, semiannual, annual, and biennial analyses shall be reported in the third monthly monitoring report following the analysis.

B. Pollutants shall be analyzed using the analytical methods described in 40 C.F.R. parts 136.3, 136.4, and 136.5 (revised March 12, 2007); or where no methods are specified for a given pollutant, by methods approved by this Regional Water Board or the State Water Board. Laboratories analyzing effluent samples and receiving water samples shall be certified by the California Department of Public Health Environmental Laboratory Accreditation Program (ELAP) or approved by the Executive Officer and must include quality assurance/quality control (QA/QC) data in their reports. A copy of the laboratory certification shall be provided to the Regional Water Board each time a new certification and/or renewal of the certification is obtained from ELAP.

C. Water/wastewater samples must be analyzed within allowable holding time limits as specified in 40 C.F.R. part 136.3. All QA/QC analyses must be run on the same dates that samples are actually analyzed. The Discharger shall retain the QA/QC documentation in its files and make available for inspection and/or submit them when requested by the Regional Water Board. Proper chain of custody procedures must be followed and a copy of that documentation shall be submitted with the monthly report.

D. The Discharger shall calibrate and perform maintenance procedures on all monitoring instruments and to insure accuracy of measurements, or shall insure that both equipment activities will be conducted.

E. For any analyses performed for which no procedure is specified in the USEPA guidelines, or in the MRP, the constituent or parameter analyzed and the method or procedure used must be specified in the monitoring report.

F. Each monitoring report must affirm in writing that "all analyses were conducted at a laboratory certified for such analyses by the Department of Public Health (formerly known as the Department of Health Services) or approved by the Executive Officer and in accordance with current USEPA guideline procedures or as specified in this MRP."

G. The monitoring report shall specify the USEPA analytical method used, the Method Detection Limit (MDL), the minimum level (ML), and the Reported Minimum Level (RML) for each pollutant. The MLs are those published by the State Water Board in the *Policy for the Implementation of Toxics Standards for Inland Surface Waters, Enclosed Bays, and Estuaries of California,* February 9, 2005, Appendix 4. The ML represents the lowest quantifiable concentration in a sample based on the proper application of all method-based analytical procedures and the absence of any matrix interference. When all specific analytical steps are followed and after appropriate application of method specific factors, the ML also represents the lowest standard in the calibration curve for that specific analytical technique. When there is deviation from the method analytical procedures, such as dilution or concentration of samples, other factors may be applied to the ML depending on the sample preparation. The resulting value is the reported minimum level.

H. The Discharger shall select the analytical method that provides a ML lower than the permit limitation established for a given parameter, unless the Discharger can demonstrate that a particular ML is not attainable, in accordance with procedures set forth in 40 C.F.R., Part 136, and obtains approval for a higher ML from the Executive Officer, as provided for in Section J below. If the effluent limitation is lower than all the MLs in Appendix 4, SIP, the Discharge must select the method with the lowest ML for compliance purposes. The Discharger shall include in the Annual Summary Report a list of the analytical methods employed for each test.

I. The Discharger shall instruct its laboratories to establish calibration standards so that the ML (or its equivalent if there is differential treatment of samples relative to calibration standards) is the lowest calibration standard. At no time shall the Discharger use analytical data derived from extrapolation beyond the lowest point of the calibration curve. In accordance with section J, below, the Discharger's laboratory may employ a calibration standard lower than the ML in Appendix 4 of the SIP.

J. In accordance with Section 2.4.3 of the SIP, the Regional Water Board Executive Officer, in consultation with the State Water Board's Quality Assurance Program Manager, may establish an ML that is not contained in Appendix 4 of the SIP to be included in the discharger's permit in any of the following situations:

1. When the pollutant under consideration is not included in Appendix 4, SIP;

2. When the discharger and the Regional Water Board agree to include in the permit a test method that is more sensitive than those specified in 40 C.F.R., Part 136 (revised as of March 12, 2007);

3. When a discharger agrees to use an ML that is lower than those listed in Appendix 4;

4. When a discharger demonstrates that the calibration standard matrix is sufficiently different from that used to establish the ML in Appendix 4 and proposes an appropriate ML for the matrix; or,

5. When the discharger uses a method, which quantification practices are not consistent with the definition of the ML. Examples of such methods are USEPA-approved method 1613 for dioxins, and furans, method 1624 for volatile organic substances, and method 1625 for semi-volatile organic substances. In such cases, the discharger, the Regional Water Board, and the State Water Resources Control Board shall agree on a lowest quantifiable limit and that limit will substitute for the ML for reporting and compliance determination purposes.

If there is any conflict between foregoing provisions and the State Implementation Policy (SIP), the provisions stated in the SIP (Section 2.4) shall prevail.

K. If the Discharger samples and performs analyses (other than for process/operational control, startup, research, or equipment testing) on any influent, effluent, or receiving water constituent more frequently than required by this Program using approved analytical methods, the results of those analyses shall be included in the report. These results shall be reflected in the calculation of the average used in demonstrating compliance with the limitations set forth in this Order.

L. The Discharger shall develop and maintain a record of all spills or bypasses of raw or partially treated sewage from its collection system or treatment plant according to the requirements in the WDR section of this Order. This record shall be made available to the Regional Water Board upon request and a spill summary shall be included in the annual summary report.

M. For all bacteriological analyses, sample dilutions should be performed so the expected range of values is bracketed (for example, with multiple tube fermentation method or membrane filtration method, 2 to 16,000 per 100 ml for total and fecal coliform, at a minimum, and 1 to 1000 per 100 ml for enterococcus). The detection methods used for each analysis shall be reported with the results of the analyses.

1. Detection methods used for coliforms (total and fecal) shall be those presented in Table 1A of 40 C.F.R., Part 136 (revised March 12, 2007), unless alternate methods have been approved in advance by the United State Environmental Protection Agency (USEPA) pursuant to 40 C.F.R. part 136.

2. Detection methods used for enterococcus shall be those presented in the USEPA publication EPA 600/4-85/076, *Test Methods for Escherichia coli and Enterococci in Water By Membrane Filter Procedure* or any improved method determined by the Regional Water Board to be appropriate.

N. Compliance monitoring focuses on the effects of a point source discharge. While compliance monitoring provides useful information about ambient conditions in some parts of the watershed, it is not designed to assess impacts from other sources of pollution (e.g., non-point source runoff, aerial fallout) or to evaluate the current status of important ecological resources on a regional basis. A more integrated, comprehensive watershed-wide monitoring program is required to provide a broader assessment of the health of the overall watershed.

The Discharger shall facilitate the development of an updated comprehensive Watershed-wide Monitoring Program for the Malibu Creek Watershed, in conjunction with other interested stakeholders, by June 30, 2011. The comprehensive monitoring program should be designed to answer specific questions of interest to a broad range of stakeholders within the watershed, potentially including: 1) What is the environmental health of streams in the overall watershed?; 2) Are the conditions at areas of unique interest improving or deteriorating?; 3) Are receiving waters near discharges meeting water quality objectives?; 4) Is body contact recreation safe?; and 5) Are fish safe to eat? In addition, the recommendations under Section 8.a "Water Quality Monitoring" of the USEPA's Nutrients TMDL for Malibu Creek Watershed shall be considered in developing an updated comprehensive Watershed-wide Monitoring Program. The Discharger and interested stakeholders shall develop a plan for joint implementation of this Watershed-wide Monitoring Program by September 30, 2011.

The Discharger shall submit interim progress reports detailing ongoing efforts towards the development and implementation of this program. Interim reports shall be received by December 15, 2011 and March 15, 2011. The Discharger shall submit a copy of the proposed comprehensive Watershed-wide Monitoring Program to the Los Angeles Regional Water Board by June 30, 2011, for approval by the Executive Officer of the Regional Water Board. The Discharger shall submit a copy of the proposed implementation plan to the Regional Water Board by September 30, 2011.

To achieve the goals of the comprehensive Watershed-wide Monitoring Program, changes to the Receiving Water Monitoring Requirements for Las Virgenes Municipal Water District's Tapia Water Reclamation Facility may be necessary to fulfill the goals of the watershed-wide monitoring program, while retaining the compliance monitoring component required to evaluate compliance with the NPDES permit. Revisions to the Discharger's Receiving Water Monitoring Program will be made under the direction of USEPA and the Executive Officer of Regional Water Board, as necessary, to accomplish these goals, and may include a reduction or increase in the number of parameters to be monitored, the frequency of monitoring, and/or the number of samples collected.

Until such time when a watershed-wide monitoring program has been developed and implemented, Las Virgenes Municipal Water District shall implement the monitoring program in the following sections.

II. MONITORING LOCATIONS

The Discharger shall establish the following monitoring locations to demonstrate compliance with the effluent limitations, discharge specifications, and other requirements in this Order:

Table E-1. Monitoring Station Locations

Discharge Point Name	Monitoring Location Name	Monitoring Location Description (include Latitude and Longitude when available)
--	INF-001	Sampling stations shall be established at each point of inflow to the sewage treatment plant and shall be located upstream of any in-plant return flows and where representative samples of the influent can be obtained. Latitude 34°04'58" North, Longitude 118°42'36" West.
001 003	EFF-001	The effluent sampling station shall be located downstream of any inplant return flows and after the final disinfection process, where representative samples of the effluent can be obtained. Under normal conditions, treated effluent discharged to Malibu Creek is conveyed through Discharge Point 001. Latitude 34°04'53" North, Longitude 118°42'23" West.
002	EFF-002	The effluent sampling station shall be located downstream of any inplant return flows and after the final disinfection process, where representative samples of the Reservoir #2 overflows discharged through Discharge Point 002 can be obtained. Sampling at this station shall only be performed when discharging at this location.
005	EFF-005	The effluent sampling station shall be located downstream of any inplant return flows and after the final disinfection process, where representative samples of the excess recycled water that discharges through Discharge Point 005 can be obtained. If the excess recycled water consists of a mixture of effluent pumped directly from the Tapia WRF as well as from the Reservoir #2, then the Discharger shall select a location downstream of where the two sources of recycled water mixes. If a sampling location cannot be provided at a location that collects samples representative of the said mixture, the Discharger may be required to obtain flow-weighted composite samples of the tertiary-treated effluent from the two locations (Tapia WRF and Reservoir #2).
--	RSW-MC001U	Malibu Creek upstream from Discharge Point 001 at the Salvation Army Camp Bridge (Dorothy Drive); Latitude 34° 04' 52", Longitude 118° 43' 00". (formerly known as station R-1)
--	RSW-MC002D	Malibu Creek at Malibu Canyon Road (County Highway N1); Latitude 34° 04' 38", Longitude 118° 42' 29". (formerly known as station R-2)
--	RSW-MC003D	Malibu Creek at a point below Rindge Dam; Latitude 34° 02' 35", Longitude 118° 41' 35". (formerly known as station R-3)
--	RSW-MC004D	Malibu Creek at Cross Creek Road; Latitude 34° 02' 20", Longitude 118° 41' 22". (formerly known as station R-4)

--	**RSW-MC007D**	Las Virgenes Creek 100' downstream from Discharge Point 002; Latitude 34° 07' 52", Longitude 118° 42' 32". (formerly known as station R-7)
--	**RSW-MC009U**	Malibu Creek at a point 100 feet upstream of the confluence of Malibu and Las Virgenes Creeks; Latitude 34° 05' 39", Longitude 118° 43' 38". (formerly known as station R-9)
--	**RSW-MC011D**	At the center of Malibu Lagoon, near the west shore; Latitude 34° 01' 46", Longitude 118° 41' 15". (formerly known as station R-11)
--	**RSW-MC013D**	Malibu Creek at a point 100 feet downstream of Discharge Point 003; Latitude 34° 04' 24", Longitude 118° 42' 23". (formerly known as station R-13)
--	**RSW-MC001F** **RSW-MC002F** **RSW-MC003F**	These "floating" stations shall be located at given sites for periods of up to twelve months and then moved to different locations in order to more fully define water quality in the receiving waters. *Initially the "floating" stations shall be located along Las Virgenes Creek at:* *RSW-MC001F Latitude 34.1436 Longitude 118.7004* *RSW-MC002F Latitude 34.1260 Longitude 118.7070* *RSW-MC003F Latitude 34.0064 Longitude 118.7180* Las Virgenes shall submit a proposal for shifting the station locations, after consultation with the Malibu Creek Watershed Advisory Council or other appropriate stakeholder group, for approval by the Executive Officer every twelve months.
	RSW-LA001U	Upstream of the Discharge Point 005. Latitude 34° 09' 01", Longitude 118° 38' 54" (formerly known as station RL-1). This location is inside an underground storm drain that eventually daylights into an open channel known as Arroyo Calabasas. The Discharger shall monitor from this location only if it is accessible and safe to do so.
	RSW-LA002D	Downstream of the Discharge Point 005, Latitude 34º 9' 17", Longitude 118º 38' 51" (formerly known as station RL-2). This location is inside an underground storm drain that eventually daylights into an open channel known as Arroyo Calabasas.
	RSW-LA003D	Los Angeles River Metals TMDL Wet Weather Flow Monitoring Station at the County of Los Angeles Department of Public Works' Wardlow Gage Station No. F319-R, in the Los Angeles River, just below Wardlow River Road. The only required monitoring at this station is for flow, which is necessary to determine whether the Discharger must comply with wet or dry weather effluent limits for cadmium, copper, lead, zinc, and selenium.

A map of the receiving water monitoring stations along Malibu Creek are shown in Attachment C-2.

Within 90 days from the adoption of this Order, the Discharger shall submit to the Executive Officer the latitude/longitude and a detailed description of the locations chosen for the influent, effluent and receiving water monitoring stations.

III. INFLUENT MONITORING REQUIREMENTS

Influent monitoring is required to:

- Determine compliance with NPDES permit conditions for $BOD_5$20°C and suspended solids removal rates;
- Assess treatment plant performance;
- Assess effectiveness of the Pretreatment Program; and,
- As a requirement of the Pollution Minimization Program.

A. Monitoring Location INF-001

a. The Discharger shall monitor influent to the facility at INF-001 as in Table E-2.

b. Samples for influent $BOD_5$20°C and suspended solids analysis shall be obtained on the same day that the effluent $BOD_5$20°C and suspended solids samples are obtained to demonstrate percent removal. Similarly, sampling for other constituents shall also be coordinated with effluent sampling.

c. Sampling stations shall be established at each point of inflow to the sewage treatment plant and shall be located upstream of any in-plant return flows and/or where representative samples of the influent can be obtained. The date and time of sampling shall be reported with the analytical results.

Table E-2. Influent Monitoring

Parameter	Units	Sample Type	Minimum Sampling Frequency	Required Analytical Test Method
Flow	MGD	recorder	Continuous[1]	[1]
pH	pH unit	grab	weekly	[3]
Suspended solids	mg/L	24-hour composite	weekly	[3]
BOD_5 20°C	mg/L	24-hour composite	weekly	[3]
Arsenic	µg/L	24-hour composite	quarterly	[3]
Cadmium	µg/L	24-hour composite	quarterly	[3]
Copper		24-hour composite	quarterly	[3]
Lead	µg/L	24-hour composite	quarterly	[3]
Mercury	µg/L	24-hour composite	quarterly	[3]
Selenium	µg/L	24-hour composite	quarterly	[3]
Zinc	µg/L	24-hour composite	quarterly	[3]
Perchlorate	µg/L	24-hour composite	quarterly	[3]
Cyanide	µg/L	grab	quarterly	[3]
Aldrin	µg/L	24-hour composite	quarterly	[3]
Alpha-BHC	µg/L	24-hour composite	quarterly	[3]
Bis(2-ethylhexyl)phthalate	µg/L	24-hour composite	quarterly	[3]
Total trihalomethanes[4]	µg/L	Calculated sum	semiannually	[3]

Parameter	Units	Sample Type	Minimum Sampling Frequency	Required Analytical Test Method
Aldrin	µg/L	24-hour composite	quarterly	[3]
Alpha-BHC	µg/L	24-hour composite	quarterly	[3]
4,4'-DDE	µg/L	24-hour composite	quarterly	[3]
4,4'-DDD	µg/L	24-hour composite	quarterly	[3]
Dieldrin	µg/L	24-hour composite	quarterly	[3]
Endrin	µg/L	24-hour composite	quarterly	[3]
Heptachlor	µg/L	24-hour composite	quarterly	[3]
Barium	µg/L	24-hour composite	semiannually	[3]
Iron	µg/L	24-hour composite	semiannually	[3]
Ammonia as Nitrogen	mg/L	24-hour composite	quarterly	[3]
Nitrate + Nitrite as Nitrogen	mg/L	24-hour composite	quarterly	[3]
Total Phosphorus	mg/L	24-hour composite	quarterly	
Remaining USEPA Priority Pollutants (excluding asbestos) [2]	µg/L	24-hour composite/ grab for VOCs, cyanide, and Chromium VI	semiannually	[3]

Footnotes

[1] Total daily flow and instantaneous peak daily flow (24-hr basis). Actual monitored flow shall be reported (not the maximum flow, i.e., design capacity).

[2] Priority pollutants are those constituents referred to in 40 C.F.R. 401.15; a list of these pollutants is provided as Appendix A to 40 C.F.R. 423.

[3] Pollutants shall be analyzed using the analytical methods described in 40 C.F.R. part 136; where no methods are specified for a given pollutant, by methods approved by this Regional Water Board or State Water Resources Control Board. For any pollutant whose effluent limitation is lower than all the minimum levels (MLs) specified in Attachment 4 of the SIP, the analytical method with the lowest ML must be selected.

[4] Total trihalomethanes is the sum of the four individual trihalomethane compounds: bromodichloromethane, bromoform, chloroform, and dibromochloromethane. This limitation is based on the Basin Plan WQO incorporation of Title 22 Maximum Contaminant Levels (MCLs) by reference.

IV. EFFLUENT MONITORING REQUIREMENTS

Effluent monitoring is required to:

- Determine compliance with NPDES permit conditions and water quality standards.
- Assess plant performance, identify operational problems and improve plant performance.
- Provide information on wastewater characteristics and flows for use in interpreting water quality and biological data; and,
- Determine Reasonable Potential Analysis for toxic pollutants.

A. Monitoring Locations EFF-001, EFF-002, and EFF-005

1. The Discharger shall monitor EFF-001, EFF-002, and EFF-005 as described in Table E-3. If more than one analytical test method is listed for a given parameter, the Discharger must select from the listed methods and corresponding Minimum Level.

2. Effluent sampling stations shall be located downstream of any in-plant return flows where representative samples of the effluent can be obtained, consistent with the descriptions in Table E-1.

Table E-3. Effluent Monitoring

Parameter	Units	Sample Type	Minimum Sampling Frequency	Required Analytical Test Method and (Minimum Level, units), respectively
Total waste flow	MGD	recorder	continuous[1]	
Turbidity [8]	NTU	recorder	continuous[1]	[6]
Total residual chlorine	mg/L	recorder	continuous[3]	[6]
Total residual chlorine	mg/L	grab	daily[4]	[6]
Total coliform [8]	CFU/100 mL or MPN/100 mL	grab	daily	[6]
Fecal coliform [8]	CFU/100 mL or MPN/100 mL	grab	daily	[6]
E. Coli [7, 8]	CFU or MPN/100 mL	grab	weekly	[6]
Temperature[9, 16]	°F	grab/recorder	monthly	[6]
pH[9, 16]	pH units	grab	weekly	[6]
Settleable solids	mL/L	grab	weekly	[6]
Suspended solids	mg/L	24-hour composite	weekly	[6]
BOD_5 20°C	mg/L	24-hour composite	weekly[5]	[6]
Oil and Grease	mg/L	grab	monthly	[6]
Dissolved oxygen	mg/L	grab	monthly	[6]
Total dissolved solids	mg/L	24-hour composite	monthly	[6]
Chloride	mg/L	24-hour composite	monthly	[6]
Sulfate	mg/L	24-hour composite	monthly	[6]
Boron	mg/L	24-hour composite	monthly	[6]
Fluoride	mg/L	24-hour composite	monthly	[6]
Ammonia nitrogen [16]	mg/L	24-hour composite	monthly	[6]
Nitrate plus nitrite as nitrogen[9, 16]	mg/L	24-hour composite	monthly	[6]
Nitrate nitrogen[9, 16]	mg/L	24-hour composite	monthly	[6]
Nitrite nitrogen[9, 16]	mg/L	24-hour composite	monthly	[6]
Organic nitrogen[9, 16]	mg/L	24-hour composite	monthly	[6]
Total kjeldahl nitrogen (TKN) [9, 16]	mg/L	24-hour composite	monthly	[6]
Total nitrogen[9, 16]	mg/L	24-hour composite	monthly	[6]
Total phosphorus	mg/L	24-hour composite	monthly	[6]
Orthophosphate-P	mg/L	24-hour composite	monthly	[6]
Surfactants (MBAS) [10]	mg/L	24-hour composite	monthly	[6]
Surfactants (CTAS) [10]	mg/L	24-hour composite	monthly	[6]
Total hardness ($CaCO_3$)	mg/L	24-hour composite	monthly	[6]
Salinity	mg/L	24-hour composite	monthly	[6]

Parameter	Units	Sample Type	Minimum Sampling Frequency	Required Analytical Test Method and (Minimum Level, units), respectively
Chronic toxicity	TUc	24-hour composite	monthly	[6]
Acute toxicity	% Survival	24-hour composite	quarterly	[6]
Perchlorate	µg/L	24-hour composite	monthly	[6]
1,4-Dioxane	µg/L	24-hour composite	semiannually	[6]
1,2,3-Trichloropropane	µg/L	grab	semiannually	[6]
Bromodichloromethane	µg/L	grab	monthly	[6]
Methyl tert-butyl ether (MTBE)	µg/L	24-hour composite	semiannually	[6]
Barium	µg/L	24-hour composite	semiannually	[6]
Iron	µg/L	24-hour composite	semiannually	[6]
Arsenic	µg/L	24-hour composite	monthly	[6]
Cadmium	µg/L	24-hour composite	monthly	[6]
Chromium III	µg/L	calculated	semiannually	[6]
Chromium VI	µg/L	grab	semiannually	[6]
Total Chromium	µg/L	grab	semiannually	[6]
Copper	µg/L	24-hour composite	monthly	[6]
Lead	µg/L	24-hour composite	monthly	[6]
Mercury	µg/L	24-hour composite	monthly	[6]
Selenium	µg/L	24-hour composite	monthly	[6]
Zinc	µg/L	24-hour composite	monthly	[6]
Cyanide	µg/L	grab	monthly	[6]
Total trihalomethanes[15]	µg/L	calculated sum	monthly	[6]
2,3,7,8-TCDD[11]	µg/L	24-hour composite	semiannually	[6]
Aldrin	µg/L	grab	monthly	[6]
Aldrin	µg/L	24-hour composite	monthly	[6]
Alpha-BHC	µg/L	24-hour composite	monthly	[6]
4,4'-DDE	µg/L	24-hour composite	monthly	[6]
4,4'-DDD	µg/L	24-hour composite	monthly	[6]
Dieldrin	µg/L	24-hour composite	monthly	[6]
Endrin	µg/L	24-hour composite	monthly	[6]
Heptachlor	µg/L	24-hour composite	monthly	[6]
Tetrachloroethylene	µg/L	grab	quarterly	[6]
Bis(2-ethylhexyl)phthalate	µg/L	24-hour composite	monthly	[6]
Remaining USEPA Priority Pollutants (excluding asbestos)[2]	µg/L	24-hour composite/grab for VOCs, cyanide, and chromium VI	semiannually	[6]
2,4-D	µg/L	24-hour composite	semiannually	[6]
2,4,5-TP (Silvex)	µg/L	24-hour composite	semiannually	[6]
Diazinon[12]	µg/L	24-hour composite	semiannually	[6]
Pesticide[14]	µg/L	24-hour composite	semiannually	[6]
Radioactivity	PCi/L	24-hour composite	semiannually	[13]

Parameter	Units	Sample Type	Minimum Sampling Frequency	Required Analytical Test Method and (Minimum Level, units), respectively
(Including gross alpha, gross beta, combined radium-226 and radium-228, tritium, strontium-90 and uranium)				

Footnotes:

[1] Where continuous monitoring of a constituent is required at monitoring locations EFF-001 and EFF-005, the following shall be reported:
Total waste flow – Total daily flow and peak daily flow (24-hr basis);
Turbidity - Maximum daily value, total amount of time each day the turbidity exceeded five turbidity units, flow-proportioned average daily value.
Continuous monitoring for total waste flow and turbidity is not required at monitoring location EFF-002. Monitoring for total waste flow and turbidity may be conducted via a grab sample collected once daily per discharge day, at a minimum.

[2] Priority pollutants are those constituents referred to in 40 C.F.R. 401.15; a list of these pollutants is provided as Appendix A to 40 C.F.R. 423.

[3] Total residual chlorine shall be recorded continuously at monitoring locations EFF-001 and EFF-005. The recorded data shall be maintained by the Discharger for at least five years. The Discharger shall extract the maximum daily peak, minimum daily peak, and average daily from the recorded media and shall be made available upon request of the Regional Water Board. The continuous monitoring data are not intended to be used for compliance determination purposes.

Continuous monitoring for total residual chlorine is not required at monitoring location EFF-002. Monitoring for total residual chlorine at this location may be conducted via a grab sample once daily per discharge day, at a minimum.

[4] Daily grab samples shall be collected at monitoring location EFF-001 and EFF-005 Monday through Friday only, except for holidays. Analytical results of daily grab samples will be used to determine compliance with total residual chlorine effluent limitation. Furthermore, additional monitoring requirements specified in section IV.A.2. shall be followed.

[5] If the result of the weekly BOD_5 analysis yields a value greater than the 30-day average limitation, the frequency of analysis shall be increased to daily within one week of knowledge of the test result for at least 30 days and until compliance with the 7-day and 30-day average BOD limits is demonstrated; after which the frequency shall revert to weekly.

[6] Pollutants shall be analyzed using the analytical methods described in 40 C.F.R. part 136; where no methods are specified for a given pollutant, by methods approved by this Regional Water Board or State Water Resources Control Board. For any pollutant whose effluent limitation is lower than all the minimum levels (MLs) specified in Attachment 4 of the SIP, the analytical method with the lowest ML must be selected.

[7] E. coli testing shall be conducted only if fecal coliform testing is positive. If the fecal coliform analysis results in no detection, a result of less than (<) the reporting limit for fecal coliform will be reported for E. coli.

[8] Coliform and turbidity samples shall be obtained at some point in the treatment process at a time when wastewater flow and characteristics are most demanding on the treatment facilities, filtration, and disinfection procedures. Fecal coliform testing shall be conducted only if total coliform test result is positive.

[9] Nitrate nitrogen, nitrite nitrogen, ammonia nitrogen, organic nitrogen, total kjeldahl nitrogen, pH, and temperature sampling shall be conducted concurrently.

[10] MBAS is Methylene blue active substances and CTAS is cobalt thiocyanate active substances. Reaches of the Los Angeles River are unlined in several reaches downstream of the points of wastewater discharge and are designated with the beneficial use of groundwater recharge (GWR) in the Basin Plan. Monitoring is required to assess compliance with the Basin Plan Water Quality Objectives, based on the incorporation by reference of the MCLs contained in Title 22 of the California Code of Regulations, for the protection of the underlying groundwater quality with the MUN beneficial use.

[11] In accordance with the SIP, the Discharger shall conduct effluent monitoring for the seventeen 2,3,7,8-tetrachlorodibenzo-p-dioxin (2,3,7,8-TCDD or dioxin) congeners in the effluent and in the receiving water Station RSW-002D, located downstream of the discharge point. The Discharger shall use the appropriate Toxicity Equivalence Factor (TEF) to determine Toxic Equivalence (TEQ). Where TEQ equals the product between each of the 17 individual congeners' (i) concentration analytical result (C_i) and their corresponding Toxicity Equivalence Factor (TEF_i)., (i.e., $TEQ_i = C_i \times TEF_i$). Compliance with the Dioxin limitation shall be determined by the summation of the seventeen individual TEQs, or the following equation:

$$\text{Dioxin concentration in effluent} = \sum_{1}^{17}(TEQ_i) = \sum_{1}^{17}(C_i)(TEF_i)$$

[12] Diazinon sampling shall be conducted concurrently with the receiving water chronic toxicity sampling.

[13] Analyze these radiochemicals by the following USEPA methods: method 900.0 for gross alpha and gross beta, method 903.0 or 903.1 for radium-226, method 904.0 for radium-228, method 906.0 for tritium, method 905.0 for strontium-90, and method 908.0 for uranium. Analysis for combined Radium-226 & 228 shall be conducted only if gross alpha results for the same sample exceed 15 pCi/L or beta greater than 50 pCi/L. If Radium-226 & 228 exceeds the stipulated criteria, analyze for Tritium, Strontium-90 and uranium.

[14] Pesticides are, for the purposes of this Order, the six constituents referred to in 40 C.F.R. § 125.58(p) (demeton, guthion, malathion, mirex, methoxychlor and parathion).

[15] Total trihalomethanes is the sum of concentrations of the trihalomethane compounds: bromodichloromethane, bromoform, chloroform, and dibromochloromethane. This limitation is based on the Basin Plan WQO incorporation of Title 22 MCLs by reference.

[16] Nitrate nitrogen, nitrite nitrogen, ammonia nitrogen, organic nitrogen, total Kjeldahl nitrogen, pH, and temperature sampling shall be conducted on the same day or as close to concurrently as possible.

---

3. Total Residual Chlorine Additional Monitoring

Continuous monitoring of total residual chlorine at Monitoring Stations EFF-001, EFF-002, and EFF-005 shall serve as an internal trigger for the increased grab sampling at EFF-001, 002, and EFF-005, respectively, if either of the following occurs, except as noted in item c:

a. Total residual chlorine concentration excursions of up to 0.3 mg/L lasting greater than 15 minutes; or

b. Total residual chlorine concentration peaks in excess of 0.3 mg/L lasting greater than 1 minute.

c. Additional grab samples need not be taken if it can be demonstrated that a stoichiometrically appropriate amount of dechlorination chemical has been added to effectively dechlorinate the effluent to 0.1 mg/L or less for peaks in excess of 0.3 mg/L lasting more than 1 minute, but not for more than five minutes.

V. WHOLE EFFLUENT TOXICITY TESTING REQUIREMENTS

A. Acute Toxicity

1. Definition of Acute Toxicity

   Acute toxicity is a measure of primarily lethal effects that occur over a 96-hour period. Acute toxicity shall be measured in percent survival measured in undiluted (100%) effluent.

   a. The average survival in the undiluted effluent for any three (3) consecutive 96-hour static or continuous flow bioassay tests shall be at least 90%, and

   b. No single test shall produce less than 70% survival.

2. Acute Toxicity Effluent Monitoring Program

   a. **Method.** The Discharger shall conduct acute toxicity tests on 100% effluent and receiving water grab samples by methods specified in 40 C.F.R. part 136, which cites USEPA's *Methods for Measuring the Acute Toxicity of Effluents and Receiving Waters to Freshwater and Marine Organisms*, October, 2002 (EPA-821-R-02-012) or a more recent edition to ensure compliance.

   b. **Test Species.** The fathead minnow, *Pimephales promelas*, shall be used as the test species for fresh water discharges and the topsmelt, *Atherinops affinis*, shall be used as the test species for brackish discharges. However, if the salinity of the receiving water is between 1 to 32 parts per thousand (ppt), the Discharger may have the option of using the inland silverslide, *Menidia beryllina*, instead of the topsmelt. The method for topsmelt is found in USEPA's *Methods for Measuring the Acute Toxicity of Effluents and Receiving Waters to Freshwater and Marine Organisms*, October, 2002 (EPA-821-R-02-012).

   c. **Alternate Reporting.** In lieu of conducting the standard acute toxicity testing with the fathead minnow, the Discharger may elect to report the results or endpoint from the first 96 hours of the chronic toxicity test as the results of the

acute toxicity test, but only if the Discharger uses USEPA's October 2002 protocol (EPA-821-R-02-013) and fathead minnow is used to conduct the chronic toxicity test.

d. **Acute Toxicity Accelerated Monitoring.** If either of the effluent or receiving water toxicity requirements in Section VI.A.4.g.i and ii, and Section VII.A.18.c., respectively, of this Order is not met, the Discharger shall conduct six additional tests approximately every two weeks, over a twelve-week period. The Discharger shall ensure that results of a failing acute toxicity test are received by the Discharger within 24 hours of completion of the test and the additional tests shall begin within 5 business days of receipt of the result. If the additional tests indicate compliance with acute toxicity limitation, the Discharger may resume regular testing.

However, if the extent of the acute toxicity of the receiving water upstream of the discharge is greater than the downstream and the results of the effluent acute toxicity test comply with acute toxicity limitation, the accelerated monitoring need not be implemented for the receiving water.

e. **Toxicity Identification Evaluation (TIE).**

1. If the results of any two of the six accelerated tests are less than 90% survival, then the Discharger shall begin a Toxicity Identification Evaluation (TIE). The TIE shall include all reasonable steps to identify the sources of toxicity. Once the sources are identified, the Discharger shall take all reasonable steps to reduce toxicity to meet the objective.

2. If the initial test and any of the additional six acute toxicity bioassay tests results are less than 70% survival, the Discharger shall immediately implement the Initial Investigation Toxicity Reduction Evaluation (TRE) Workplan. Once the sources are identified the Discharger shall take all reasonable steps to reduce toxicity to meet the requirements.

B. Chronic Toxicity Testing

1. Definition of Chronic Toxicity

Chronic toxicity is a measure of adverse sub-lethal effects in plants, animals, or invertebrates in a long-term test. The effects measured may include lethality or decreases in fertilization, growth, and reproduction.

2. Chronic Toxicity Effluent Monitoring Program

a. **Test Methods**. The Discharger shall conduct critical life stage chronic toxicity tests on 24-hour composite 100 % effluent samples or receiving water samples in

accordance with USEPA's *Short Term Methods for Estimating the Chronic Toxicity of Effluents and Receiving Waters to Freshwater Organisms*, October 2002 (EPA-821-R-02-013) or USEPA's *Short Term Methods for Estimating the Chronic Toxicity of Effluents and Receiving Waters to Marine and Estuarine Organisms*, October 2002 (EPA-821-R-02-014), or current version.

b. **Frequency**

1. **Screening and Monitoring**. The Discharger shall conduct the first chronic toxicity test screening for three consecutive months beginning from the date of initial discharge. The Discharger shall conduct short-term tests with the cladoceran, water flea (*Ceriodaphnia dubia* - survival and reproduction test), the fathead minnow (*Pimephales promelas* - larval survival and growth test), and the green alga (*Selenastrum capricornutum* - growth test) as an initial screening process for a minimum of three, but not to exceed, five suites of tests to account for potential variability of the effluent / receiving water. After this screening period, monitoring shall be conducted using the most sensitive species.

2. **Re-screening.** Re-screening is required every 24 months. The Discharger shall re-screen with the three species listed above and continue to monitor with the most sensitive species. If the first suite of re-screening tests demonstrates that the same species is the most sensitive then the re-screening does not need to include more than one suite of tests. If a different species is the most sensitive or if there is uncertainty as to whether the same species is still the most sensitive based on the test results, then the Discharger shall proceed with suites of screening tests for a minimum of three, but not to exceed five suites.

3. Regular toxicity tests - After the screening period, monitoring shall be conducted monthly using the most sensitive species.

c. **Toxicity Units.** The chronic toxicity of the effluent shall be expressed and reported in Chronic Toxic Units, TUc, where,

$$TUc = \frac{100}{NOEC}$$

The No Observable Effect Concentration (NOEC) is expressed as the maximum percent effluent concentration that causes no observable effect on test organisms, as determined by the results of a critical life stage toxicity test.

3. Accelerated Monitoring

If the chronic toxicity of the effluent or the receiving water immediately downstream the discharge exceeds the monthly median trigger of 1.0 TU_c, the Discharger shall conduct six additional tests of the water source that exceeded the 1.0 TUc trigger (effluent or downstream receiving water), approximately every two weeks, over a 12-week period. The Discharger shall ensure that they receive results of a failing chronic toxicity test within 24 hours of the completion of the test and the additional tests shall begin within 5 business days of the receipt of the result. However, if the chronic toxicity of the receiving water upstream of the discharge is greater than the downstream and the TUc of the effluent chronic toxicity test is less than or equal to a monthly median of 1 TU_c trigger, then accelerated monitoring need not be implemented for the receiving water.

a. If any three out of the initial test and the six additional tests results exceed 1.0 TU_c the Discharger shall immediately implement the Initial Investigation TRE workplan. Otherwise, the Discharger may return to normal sampling.

b. If implementation of the initial investigation TRE workplan indicates the source of toxicity (e.g., a temporary plant upset, etc.), then the Discharger shall return to the normal sampling frequency required in Table 3 and Table 4 of this MRP.

c. If all of the six additional tests required above do not exceed 1 TUc, then the Discharger may return to the normal sampling frequency.

d. If a TRE/TIE is initiated prior to completion of the accelerated testing schedule required, then the accelerated testing schedule may be terminated, or used as necessary in performing the TRE/TIE, as determined by the Executive Officer.

C. Quality Assurance

1. Concurrent testing with a reference toxicant shall be conducted. Reference toxicant tests shall be conducted using the same test conditions as the effluent toxicity tests (e.g., same test duration, etc.).

2. If either the reference toxicant test or effluent test does not meet all test acceptability criteria (TAC) as specified in the test methods manual (EPA-821-R-02-012 and/or EPA-821-R-02-013), then the Discharger must re-sample and retest within 14 days.

3. Control and dilution water should be receiving water or laboratory water, as appropriate, as described in the manual. If the dilution water used is different from the culture water, a second control using culture water shall be used.

D. Preparation of an Initial Investigation TRE Workplan

The Discharger shall prepare and submit a copy of the Discharger's initial investigation Toxicity Reduction Evaluation (TRE) workplan to the Executive Officer of the Regional

Water Board for approval within 90 days of the effective date of this permit. If the Executive Officer does not disapprove the workplan within 60 days, the workplan shall become effective. The Discharger shall use USEPA manual EPA/833B-99/002 (municipal) as guidance, or most current version. At a minimum, the TRE Workplan must contain the provisions in Attachment G. This workplan shall describe the steps the Discharger intends to follow if toxicity is detected, and should include, at a minimum:

1. A description of the investigation and evaluation techniques that will be used to identify potential causes and sources of toxicity, effluent variability, and treatment system efficiency.

2. A description of the facility's methods of maximizing in-house treatment efficiency and good housekeeping practices, and a list of all chemicals used in the operation of the facility; and,

3. If a toxicity identification evaluation (TIE) is necessary, an indication of the person who would conduct the TIEs (i.e., an in-house expert or an outside contractor). See MRP section V.E.3. for guidance manuals.

E. Steps in Toxicity Reduction Evaluation (TRE) and Toxicity Identification Evaluation (TIE)

1. If results of the implementation of the facility's initial investigation TRE workplan indicate the need to continue the TRE/TIE, the Discharger shall expeditiously develop a more detailed TRE workplan for submittal to the Executive Officer within 15 days of completion of the initial investigation TRE. The detailed workplan shall include, but not be limited to:

   a. Future actions to investigate and identify the cause of toxicity;

   b. Actions the Discharger will take to mitigate the impact of the discharge and prevent the recurrence of toxicity; and,

   c. A schedule for these actions.

2. The following section summarizes the stepwise approach used in conducting the TRE:

   a. Step 1 includes basic data collection.

   b. Step 2 evaluates optimization of the treatment system operation, facility housekeeping, and selection and use of in-plant process chemicals.

   c. If Steps 1 and 2 are unsuccessful, Step 3 implements a Toxicity Identification Evaluation (TIE) and employment of all reasonable efforts using current available

TIE methodologies. The objective of the TIE shall be to identify the substance or combination of substances causing the observed toxicity.

d. Assuming successful identification or characterization of the toxicant(s), Step 4 evaluates final effluent treatment options.

e. Step 5 evaluates in-plant treatment options.

f. Step 6 consists of confirmation once a toxicity control method has been implemented. Many recommended TRE elements parallel source control, pollution prevention best management practices (BMPs). To prevent duplication of efforts, evidence of compliance with those requirements may be sufficient to comply with TRE requirements. By requiring the first steps of a TRE to be accelerated testing and review of the facility's TRE workplan, a TRE may be ended in its early stages. All reasonable steps shall be taken to reduce toxicity to the required level. The TRE may be ended at any stage if monitoring indicates there are no longer toxicity violations.

3. The Discharger shall initiate a TIE as part of the TRE process to identify the cause(s) of toxicity. The Discharger shall use the USEPA acute manual, chronic manual, EPA/600/R-96-054 (Phase I), EPA/600/R-92/080 (Phase II), and EPA-600/R-92/081 (Phase III), as guidance.

4. If a TRE/TIE is initiated prior to completion of the accelerated testing required in Section V.B.3. of this program, then the accelerated testing schedule may be terminated, or used as necessary in performing the TRE/TIE, as determined by the Executive Officer.

5. Toxicity tests conducted as part of a TRE/TIE may also be used for compliance, if appropriate.

6. The Regional Water Board recognizes that toxicity may be episodic and identification of causes of and reduction of sources of toxicity may not be successful in all cases. Consideration of enforcement action by the Regional Water Board will be based, in part, on the Discharger's actions and efforts to identify and control or reduce sources of consistent toxicity.

   a. If all the results of the six additional tests are in compliance with the chronic toxicity limitation, the Discharger may resume regular monthly testing.

   b. If the results of any of the six accelerated tests exceed the acute toxicity limitation, or the chronic toxicity trigger, then the Discharger shall continue to monitor weekly until six consecutive weekly tests are in compliance. At that time, the Discharger may resume regular monthly testing.

c. If the results of two of the six tests exceed the 1 TUc trigger, the Discharger shall initiate a TRE.

d. If implementation of the initial investigation TRE workplan (see item B.3.b. above) indicates the source of toxicity (e.g., a temporary plant upset, etc.), then the Discharger shall return to the regular testing frequency.

F. Ammonia Removal

1. Except with prior approval from the Executive Officer of the Regional Water Board, ammonia shall not be removed from bioassay samples. The Discharger must demonstrate the effluent toxicity is caused by ammonia because of increasing test pH when conducting the toxicity test. It is important to distinguish the potential toxic effects of ammonia from other pH sensitive chemicals, such as certain heavy metals, sulfide, and cyanide. The following may be steps to demonstrate that the toxicity is caused by ammonia and not other toxicants before the Executive Officer would allow for control of pH in the test.

   a. There is consistent toxicity in the effluent and the maximum pH in the toxicity test is in the range to cause toxicity due to increased pH.

   b. Chronic ammonia concentrations in the effluent are greater than 4 mg/L total ammonia.

   c. Conduct graduated pH tests as specified in the toxicity identification evaluation methods. For example, mortality should be higher at pH 8 and lower at pH 6.

   d. Treat the effluent with a zeolite column to remove ammonia. Mortality in the zeolite treated effluent should be lower than the non-zeolite treated effluent. Then add ammonia back to the zeolite-treated samples to confirm toxicity due to ammonia.

2. When it has been demonstrated that toxicity is due to ammonia because of increasing test pH, pH may be controlled using appropriate procedures which do not significantly alter the nature of the effluent, after submitting a written request to the Regional Water Board, and receiving written permission expressing approval from the Executive Officer of the Regional Water Board.

G. Reporting

The Discharger shall submit a full report of the toxicity test results, including any accelerated testing conducted during the month, as required by this permit. Test results shall be reported in percent survival (% Survival) for acute toxicity or Chronic Toxicity Units (TUc), as required, with the self-monitoring report (SMR) for the month in which the test is conducted. If an initial investigation indicates the source of toxicity and

accelerated testing is unnecessary, pursuant to Section V.A.2.d. and V.B.3., then those results shall be submitted with the SMR for the period in which the Investigation occurred.

1. The full report shall be received by the Regional Water Board by the 15th day of the third month following sampling.

2. The full report shall consist of (1) the results; (2) the dates of sample collection and initiation of each toxicity test; (3) the toxicity limitation; and, (4) printout of the toxicity program (ToxCalc or CETIS).

3. Test results for toxicity tests also shall be reported according to the appropriate manual chapter on Report Preparation and shall be attached to the SMR. Routine reporting shall include, at a minimum, as applicable, for each test, as appropriate:

   a. sample date(s)

   b. test initiation date

   c. test species

   d. end point value(s) for each dilution (e.g. number of young, growth rate, percent survival)

   e. NOEC values in percent effluent

   f. TUc value(s), where $TU_c = \frac{100}{NOEC}$

   g. Mean percent mortality (+standard deviation) after 96 hours in 100% effluent (if applicable)

   h. NOEC and LOEC (Lowest Observable Effect Concentration) values for reference toxicant test(s)

   i. Available water quality measurements for each test (e.g., pH, D.O., temperature, conductivity, hardness, salinity, ammonia).

4. The Discharger shall provide a compliance summary that includes a summary table of toxicity data from at least eleven of the most recent samples.

5. The Discharger shall notify this Regional Water Board immediately of any toxicity trigger exceedance and in writing 14 days after the receipt of the results of the exceedance. The notification will describe actions the Discharger has taken or will take to investigate and correct the cause(s) of toxicity. It may also include a status

report on any actions required by the permit, with a schedule for actions not yet completed. If no actions have been taken, the reasons shall be given.

VI. LAND DISCHARGE MONITORING REQUIREMENTS

Not Applicable.

VII. RECLAMATION MONITORING REQUIREMENTS

Not Applicable.

VIII. RECEIVING WATER MONITORING REQUIREMENTS – SURFACE WATER

Receiving water monitoring is required to demonstrate compliance with permit limitations and to assess overall conditions and the health of resources within the watershed. Receiving water monitoring for certain constituents at monitoring locations within Malibu Creek is required monthly on a year-round basis, even during months when there is no expected discharge to the creek, to provide background information pertaining to water quality conditions within the creek and to provide a basis for evaluation of compliance with permit limitations during periods of emergency or other unanticipated effluent discharges to the creek. Weekly monitoring for nutrients at the receiving water locations is required due to the existing impairment of Malibu Creek for these constituents. However, the Discharger may submit a request to modify this monitoring requirement, after at least 12 months of weekly monitoring data has been accumulated, provided that such a request is supported by submittal of an interpretive report justifying the need for any proposed modifications.

A. Monitoring Location

1. The Discharger shall monitor at RSW-MC001U; RSW-MC002D, RSW-MC003D, RSW-MC004D, RSW-MC007D, RSW-MC009U, RSW-MC011D, RSW-MC013D, RSW-LR001U, and RSW-LR002D, as follows:.

Table E-7a. Receiving Water Monitoring Requirements

Parameter	Units	Sample Type	Minimum Sampling Frequency	Required Analytical Test Method
Total flow	CFS	grab	Monthly[7]	[1]
pH[6]	pH units	grab	weekly	[1]
Temperature[6]	°F	grab	weekly	[1]
Dissolved oxygen[6]	mg/L	grab	weekly	[1]
Total residual chlorine	mg/L	grab	monthly[7]	[1]
Total coliform	CFU/100mL or MPN/100 mL	grab	monthly[7]	[1]
Fecal coliform	CFU/100mL or MPN/100 mL	grab	monthly[7]	[1]

Parameter	Units	Sample Type	Minimum Sampling Frequency	Required Analytical Test Method
E. coli	CFU/100mL or MPN/100 mL	grab	monthly[7]	[1]
Turbidity	NTU	grab	monthly[7]	[1]
BOD_5 20°C	mg/L	grab	monthly[7]	[1]
Total dissolved solids	mg/L	grab	monthly[7]	[1]
Conductivity[6]	µmho/cm	grab	weekly	[1]
Chloride	mg/L	grab	monthly[7]	[1]
Sulfates	mg/L	grab	monthly[7]	[1]
Boron	mg/L	grab	monthly[7]	[1]
Fluoride	mg/L	grab	monthly[7]	[1]
Ammonia nitrogen[6]	mg/L	grab	weekly	[1]
Nitrate plus nitrite as nitrogen[6]	mg/L	grab	weekly	[1]
Nitrate as nitrogen[6]	mg/L	grab	weekly	[1]
Nitrite as nitrogen[6]	mg/L	grab	weekly	[1]
Organic nitrogen[6]	mg/L	grab	weekly	[1]
Total kjeldahl nitrogen (TKN)[6]	mg/L	grab	weekly	[1]
Total nitrogen[6]	mg/L	grab	weekly	[1]
Total phosphorus[6]	mg/L	grab	weekly	[1]
Orthophosphate-P[6]	mg/L	grab	weekly	[1]
Algal biomass as chlorophyll a [2]	mg/cm^2	grab	annually	[1]
Surfactants (MBAS)[1]	mg/L	grab	monthly[7]	[1]
Surfactants (CTAS)	mg/L	grab	monthly[7]	[1]
Chemical oxygen demand (COD)	mg/L	grab	monthly[7]	[1]
Oil and grease	mg/L	grab	monthly[7]	[1]
Settleable solids	ml/L	grab	monthly[7]	[1]
Suspended solids	mg/L	grab	monthly[7]	[1]
Total hardness ($CaCO_3$)	mg/L	grab	monthly[7]	[1]
Salinity	mg/L	grab	monthly[7]	[1]
Chronic toxicity	TUc	grab	quarterly	[1]
Acute toxicity	% Survival	grab	semiannually	[1]
Iron	µg/L	grab	semiannually	[1]
Perchlorate	µg/L	grab	semiannually	[1]
1,4-Dioxane	µg/L	grab	semiannually	[1]
1,2,3-Trichloropropane	µg/L	grab	semiannually	[1]
MTBE	µg/L	grab	semiannually	[1]
Arsenic	µg/L	grab	semiannually	[1]
Cadmium	µg/L	grab	monthly[7]	[1]

Parameter	Units	Sample Type	Minimum Sampling Frequency	Required Analytical Test Method
Chromium III	µg/L	Calculated sum	semiannually	[1]
Chromium VI	µg/L	grab	semiannually	[1]
Total chromium	µg/L	grab	semiannually	[1]
Copper	µg/L	grab	monthly[7]	[1]
Lead	µg/L	grab	monthly[7]	[1]
Mercury	µg/L	grab	monthly[7]	[1]
Selenium	µg/L	grab	monthly[7]	[1]
Zinc	µg/L	grab	monthly[7]	[1]
2,3,7,8-TCDD (Dioxin) [4]	µg/L	grab	semiannually	[1]
Aldrin	µg/L	grab	monthly[7]	[1]
Bromodichloromethane	µg/L	grab	monthly[7]	[1]
Total trihalomethanes	µg/L	Calculated sum	semiannually	[1]
Tetrachloroethylene	µg/L	grab	quarterly	[1]
Bis(2-Ethylhexyl) Phthalate	µg/L	grab	monthly[7]	[1]
alpha-BHC	µg/L	grab	monthly[7]	[1]
Remaining USEPA Priority Pollutants[3] (except asbestos)	µg/L	grab	semiannually	[1]
Barium	µg/L	grab	semiannually	[1]
Methoxychlor	µg/L	grab	semiannually	[1]
Mirex	µg/L	grab	semiannually	[1]
2,4-D	µg/L	grab	semiannually	[1]
2,4,5-TP (Silvex)	µg/L	grab	semiannually	[1]
Diazinon[5]	µg/L	grab	semiannually	[1]

Footnotes:

[1] Pollutants shall be analyzed using the analytical methods described in 40 C.F.R. part 136; where no methods are specified for a given pollutant, by methods approved by this Regional Water Board or State Water Resources Control Board. For any pollutant whose effluent limitation is lower than all the minimum levels (MLs) specified in Attachment 4 of the SIP, the analytical method with the lowest ML must be selected.

[2] Algal biomass or Chlorophyll *a* samples shall be collected by obtaining scrapings from the substrate. This will be a measure of benthic algae, rather than algae in the water column. Percent cover shall also be reported. Algal biomass shall be conducted with the annual bioassessment program. Since RSW-LR001U is inside a closed, underground storm drain, algal biomass monitoring is not required to be conducted at this location.

[3] Priority pollutants are those constituents referred to in 40 C.F.R. 401.15; a list of these pollutants is provided as Appendix A to 40 C.F.R. 423.

[4] In accordance with the SIP, the Discharger shall conduct effluent monitoring for the seventeen 2,3,7,8-tetrachlorodibenzo-p-dioxin (2,3,7,8-TCDD or dioxin) congeners in the effluent and in the receiving water Station RSW-002D, located downstream of the discharge point. The Discharger shall use the appropriate Toxicity Equivalence Factor (TEF) to determine Toxic Equivalence (TEQ). Where TEQ equals the product between each of the 17 individual congeners' (i) concentration analytical result (C_i) and their corresponding Toxicity Equivalence Factor (TEF_i)., (i.e., $TEQ_i = C_i \times TEF_i$). Compliance with the Dioxin limitation shall be determined by the summation of the seventeen individual TEQs, or the following equation:

$$\text{Dioxin concentration in effluent} = \sum_{1}^{17}(TEQ_i) = \sum_{1}^{17}(C_i)(TEF_i)$$

[5] Diazinon sampling shall be conducted concurrently with the receiving water chronic toxicity sampling. Nitrate nitrogen, nitrite nitrogen, ammonia nitrogen, organic nitrogen, total Kjeldahl nitrogen, total phosphorus, orthophosphate-P, conductivity, pH, dissolved oxygen and temperature sampling shall be conducted weekly for a minimum of 12 consecutive months. After completion of at least 12 months of monitoring, the Discharger may submit a request for revision of the monitoring requirements, including a possible reduction of the number of parameters to be measured, the frequency of monitoring, or the number of sampling stations to be monitored. Any such request for revisions to the monitoring requirements shall be accompanied by a detailed report justifying the rationale for the requested revisions. Such changes may be authorized by the Executive Officer upon written notification to the Discharger. The Discharger shall continue to conduct weekly monitoring as specified until such time as written authorization for any changes has been received from the Executive Officer.

[7] Monitoring at RSW-MC001U, RSW-MC002D, RSW-MC003D, RSW-MC004D, RSW-MC007D, RSW-MC009U, RSW-MC011D and RSW-MC013D is required only during months when a discharge from EFF-001 or EFF 003 occurs to Malibu Creek.

Monitoring at RSW-LR001U and RSW-LR002D is required only during months when a discharge from EFF-005 occurs to the Los Angeles River.

2. The Discharger shall monitor at the following three "floating" stations- RSW-MC001F, RSW-MC002F, and RSW-MC003F- as specified in Table E-7b:

Table E-7b. Receiving Water Monitoring Requirements for Floating Stations

Parameter	Units	Sample Type	Minimum Sampling Frequency	Required Analytical Test Method
pH	pH units	grab	monthly	[1]
Temperature	°F	grab	monthly	[1]
Dissolved Oxygen	mg/L	grab	monthly	[1]
BOD_5 20°C	mg/L	grab	monthly	[1]
Ammonia nitrogen	mg/L	grab	monthly	[1]
Nitrate plus nitrite as nitrogen	mg/L	grab	monthly	[1]
Nitrate nitrogen	mg/L	grab	monthly	[1]
Nitrite nitrogen	mg/L	grab	monthly	[1]
Organic nitrogen	mg/L	grab	monthly	[1]
Total kjeldahl nitrogen (TKN)	mg/L	grab	monthly	[1]
Total nitrogen	mg/L	grab	monthly	[1]
Total phosphorus	mg/L	grab	monthly	[1]
Orthophosphate-P	mg/L	grab	monthly	[1]
Total coliform	CFU/100mL or MPN/100 mL	grab	monthly	[1]
Fecal coliform	CFU/100mL or MPN/100 mL	grab	monthly	[1]

The Discharger shall also conduct monthly visual observations at these three floating stations.

The locations of these three "floating" stations will change as needed, in order to more fully define water quality in the receiving waters. These “floating” stations shall be located at given sites for periods of up to twelve months and then moved to different locations in order to more fully define water quality in the receiving waters. Every twelve months, the LVMWD shall submit a proposal for shifting the station locations, after consultation with the Malibu Creek Watershed Advisory Council or other appropriate stakeholder group, for approval by the Executive Officer.

Initially the “floating” stations shall be located along Las Virgenes Creek at:

- RSW-MC001F- Latitude 34.1436°, Longitude 118.7004°
- RSW-MC002F- Latitude 34.1260°, Longitude 118.7070°
- RSW-MC003F- Latitude 34.0064°, Longitude 118.7180°

Footnotes:

[1] Pollutants shall be analyzed using the analytical methods described in 40 C.F.R. part 136; where no methods are specified for a given pollutant, by methods approved by this Regional Water Board or State Water Resources Control Board. For any pollutant whose effluent limitation is lower than all the minimum levels (MLs) specified in Attachment 4 of the SIP, the analytical method with the lowest ML must be selected.

[3] Priority pollutants are those constituents referred to in 40 C.F.R. 401.15; a list of these pollutants is provided as Appendix A to 40 C.F.R. 423.

[4] In accordance with the SIP, the Discharger shall conduct monitoring for the seventeen 2,3,7,8-tetrachlorodibenzo-p-dioxin (2,3,7,8-TCDD or dioxin) congeners in the effluent and in the receiving water stations, located downstream of the discharge points. The Discharger shall use the appropriate Toxicity Equivalence Factor (TEF) to determine Toxic Equivalence (TEQ). Where TEQ equals the product between each of the 17 individual congeners’ (i) concentration analytical result (C_i) and their corresponding Toxicity Equivalence Factor (TEF_i)., (i.e., $TEQ_i = C_i \times TEF_i$). Compliance with the Dioxin limitation shall be determined by the summation of the seventeen individual TEQs, or the following equation:

$$\text{Dioxin concentration in effluent} = \sum_{1}^{17}(TEQ_i) = \sum_{1}^{17}(C_i)(TEF_i)$$

[5] Diazinon sampling shall be conducted concurrently with the receiving water chronic toxicity sampling.

---

3. In the event of a spill or bypass of raw or partially treated sewage from the Tapia Water Reclamation Facility into Malibu Creek or the Los Angeles River, total and fecal coliform analyses shall be made on grab samples collected at all potentially affected downstream receiving water stations and at least one unaffected upstream receiving water station.

   Coliform samples shall be collected at each station on the date of the spill or bypass, and daily on each of the following four days or until coliform levels in the receiving water are within normal range and the bypass or spill has ceased.

4. At the same time the receiving waters are sampled, observations, which must include site photos, shall be made in the reach bounded by the Stations, and a log shall be maintained thereof. A summary of these observations noted in the log and site photos shall be submitted with the monitoring reports.

   A. Attention shall be given to the presence and extent, or absence of:

      a. oil, grease, scum, or solids of waste origin;

      b. sludge deposits;

      c. discoloration of surface waters;

      d. algal blooms;

      e. odors;

      f. foam; and,

      g. other significant observations in immediate vicinity (i.e. storm drain flows, etc.).

   B. The following shall also be noted in the log:

      a. date and time of observation;

      b. weather days conditions (including air temperature);

      c. flow measurement (estimate in cubic feet per second, cfs);

      d. exact sampling location;

      e. users of water in the River (i.e. people washing, swimming and playing in the river, etc.);

f. non-contact users (i.e. bikers, joggers, etc.); and,

g. wildlife (i.e. birds, mammals, reptiles, estimated amount of vegetation).

5. Tapia WRF shall monitor the receiving water downstream of the discharge, during any day that the filters are bypassed, for BOD, suspended solids, settleable solids, and oil and grease, until it is demonstrated that the filter "bypass" has not caused an adverse impact on the receiving water. Tapia WRF shall submit a written report to the Regional Water Board, according to the corresponding monthly self monitoring report schedule. The report shall include, the results from the daily receiving water monitoring. However, if the results are not available in time to be submitted with the corresponding monthly report, then, the results shall be submitted to the Regional Water Board as soon as the results become available.

6. Receiving water samples shall not be taken during or within 48 hours following the flow of rainwater runoff into Malibu Creek or the Los Angeles River.

7. Sampling may be rescheduled at receiving water stations, if weather and/or flow conditions would endanger personnel collecting receiving water samples. The monthly monitoring report shall note such occasions.

8. The Discharger shall report the maximum daily flow in the Los Angeles River, downstream of the discharge, at the LA County Department of Public Works' Gage Station No. F319R Los Angeles River below Wardlow, as specified in Table E-7c, only when discharging through Discharge Point 005. For the purposes of this Order, this station is also known as RSW-LA003D. This information is necessary to determine the wet-weather condition of the river, as defined in the Los Angeles River Metals TMDL. If the gauging station is not operational, an estimated maximum daily flow may be submitted.

Table E-7c. Los Angeles River Flow Monitoring Requirement

Parameter	Units	Sample Type	Minimum Sampling Frequency	Required Analytical Test Method
Flow	cfs	recorder	daily	N/A

B. Monitoring Location RGW-001 – Not applicable.

Table E-7d. Receiving Ground Water Monitoring Requirements

Parameter	Units	Sample Type	Minimum Sampling Frequency	Required Analytical Test Method
N/A	--	--	--	--

IX. OTHER MONITORING REQUIREMENTS

A. Special Study – Constituents of Emerging Concern in Effluent

CEC Special Study Requirements

1. The Discharger shall initiate an investigation of CECs in the Discharger's effluent by conducting a special study. Specifically, within 6 months of the effective date of this Order, the Discharger shall develop a CEC Special Study Work Plan (Work Plan) and submit for approval by the Executive Officer of this Regional Water Board. Immediately upon approval of the Work Plan, the Discharger shall fully implement the Special Study.

   This Special Study Work Plan shall include, but not limited to, the following:

   iv. Identification of CECs to be monitored in the effluent, sample type (e.g. 24-hour composite), sampling frequency, proposed sampling month, and sampling methodology. Table E-8 identifies the minimum parameters to be monitored.

Table E-8 – Effluent Monitoring of CECs

Parameter	Units	Sample Type	Minimum Sampling Frequency	Analytical Test Method and (Minimum Level, units)
17α-Ethinyl Estradiol	ng/L	To be proposed	Annually	To be proposed
17β-Estradiol	ng/L	To be proposed	Annually	To be proposed
Estrone	ng/L	To be proposed	Annually	To be proposed
Bisphenol A	ng/L	To be proposed	Annually	To be proposed
Nonylphenol and nonylphenol polyethoxylates	ng/L	To be proposed	Annually	To be proposed
Octylphenol and octylphenol polyethoxylates	ng/L	To be proposed	Annually	To be proposed
Polybrominated diphenyl ethers	ng/L	To be proposed	Annually	To be proposed
Acetaminophen	ng/L	To be proposed	Annually	To be proposed
Amoxicillin	ng/L	To be proposed	Annually	To be proposed
Azithromycin	ng/L	To be proposed	Annually	To be proposed
Carbamazepine	ng/L	To be proposed	Annually	To be proposed
Caffeine	ng/L	To be proposed	Annually	To be proposed
Ciprofloxacin	ng/L	To be proposed	Annually	To be proposed
DEET	ng/L	To be proposed	Annually	To be proposed
Dilantin	ng/L	To be proposed	Annually	To be proposed
Gemfibrozil	ng/L	To be proposed	Annually	To be proposed
Ibuprofen	ng/L	To be proposed	Annually	To be proposed
Lipitor (Atorvastain)	ng/L	To be proposed	Annually	To be proposed
Meprobamate	ng/L	To be proposed	Annually	To be proposed
Sulfamethoxazole	ng/L	To be proposed	Annually	To be proposed
Trimethoprim	ng/L	To be proposed	Annually	To be proposed
Salicylic acid	ng/L	To be proposed	Annually	To be proposed

Parameter	Units	Sample Type	Minimum Sampling Frequency	Analytical Test Method and (Minimum Level, units)
TCEP	ng/L	To be proposed	Annually	To be proposed
Triclosan	ng/L	To be proposed	Annually	To be proposed

Once the SCCWRP's recommended list of CEC monitoring in ambient waters, including ocean waters, is finalized, the above list of minimum parameters to be monitored by the Discharger and the sampling frequency may be re-evaluated and modified by the Executive Officer. At such time, upon request by the Executive Officer, the Discharger shall monitor the requested CEC parameters at the specified frequency. In the Special Study Work Plan, the Discharger may also propose, for consideration and approval by the Executive Officer, surrogate or indicator CECs that may contribute towards a better understanding of CECs in its effluent.

Sample Type – The Discharger shall propose in the Work Plan the appropriate sample type (e.g. grab or composite) for each constituent.

Sampling Period – At minimum, the Discharger shall monitor the specified CECs once per year. The Work Plan shall propose the appropriate sampling month or quarter for each year, consistent with the goals of the analyses. The rationale for selecting the particular sampling month or quarter shall be explained in the Work Plan.

Proposed Sampling Month- The Discharger may choose a fixed month for sampling or vary the sampling month over the duration of the special study in order to examine possible temporal associations.

Analytical Test Methodology – The Discharger shall review and consider all available analytical test methodologies, including but not limited to those listed in USEPA Methods 1694 and 1698, and methodologies approved or utilized by U.S. Geologic Survey, California Department of Public Health, and other federal or State agencies. Based on its review, the Discharger shall propose the most appropriate analytical methodology, considering sensitivity, accuracy, availability, and cost.

v. Characterization of existing CEC data (data collected previous to Special Study). The Discharger shall propose a characterization of all existing CEC data (associated with its effluent or receiving water) that have been collected for various purposes in the past. At minimum, the characterization shall include:

- an identification of all CECs monitored to date (outside of this Special Study);
- monitoring duration, frequency, and date(s) (for example, from 2000-present, annually);
- analytical methodologies employed;
- RL, MLs and MDLs achieved for each methodology used; and
- If detected, temporal/seasonal trend analyses (using both statistical and graphical demonstration) of CECs.

vi. Evaluation of CEC data collected as part of this Special Study. The Discharger shall propose an evaluation of CEC data (associated with its effluent) to be collected as part of this special study. At minimum, the characterization shall include:
- an identification of CECs that have been monitored;
- monitoring duration, frequency, and date(s);
- RL, MLs and MDLs achieved for each methodology used;
- a brief update on any improvements (or change) in the analytical methodologies and associated RL, MLs and MDLs achieved for each methodology used; and
- If detected, temporal/seasonal trend analyses (using both statistical and graphical demonstration) of cumulative CEC data collected as part of this special study.

2. Reporting – By April 15th of each year (starting April 15, 2012), the Discharger shall submit to the Executive Officer of this Regional Water Board, an annual report summarizing the monitoring results from the previous year. For example, the annual report due April 15, 2012 shall include CEC monitoring data from January to December 2011. Each annual report shall include a compilation of effluent monitoring data of CECs listed in the approved Work Plan, MLs, sample type, analytical methodology used, sampling date/time, QA/QC information, and an evaluation of cumulative CEC data collected to date as part of this special study (see above for further details on CEC data evaluation). In addition, the first annual report due April 15, 2012 shall include a characterization of existing CEC data- i.e. all data collected outside of this special study (see above for further details on existing CEC data characterization).

B. Watershed Monitoring

The goals of the Watershed-wide Monitoring Program for the Malibu Creek and Los Angeles River Watersheds are to:

- Determine compliance with receiving water limits;
- Monitor trends in surface water quality;
- Ensure protection of beneficial uses;
- Provide data for modeling contaminants of concern;
- Characterize water quality including seasonal variation of surface waters within the watershed;
- Assess the health of the biological community; and
- Determine mixing dynamics of effluent and receiving waters in the estuary.

1. The Discharger shall immediately facilitate the development of an updated comprehensive Watershed-wide Monitoring Program for the Malibu Creek Watershed, in conjunction with other interested stakeholders. The comprehensive monitoring program should be designed to answer specific questions of interest to a broad range of stakeholders within the watershed, potentially including: 1) What is the environmental health of streams in the overall watershed?; 2) Are the conditions at areas of unique interest getting better or worse?; 3) Are receiving waters near discharges meeting water quality objectives?; 4) Is body contact recreation safe?; and 5) Are fish safe to eat?. In addition, the recommendations under Section 8.a "Water Quality Monitoring" of the USEPA's Nutrients TMDL for Malibu Creek Watershed shall be considered in developing an updated comprehensive Watershed-wide Monitoring Program. In addition, the Discharger and interested stakeholders shall develop a plan for joint implementation of this Watershed-wide Monitoring Program by September 2, 2011.

   The Discharger shall submit interim progress reports detailing ongoing efforts towards the development and implementation of this program. Interim reports should be received by January 1, 2011 and April 1, 2011. The April 1, 2011 report shall contain an analysis of 35 years of existing data from watershed management efforts. The Discharger shall submit a copy of the proposed comprehensive Watershed-wide Monitoring Program to the Los Angeles Regional Water Board by September 2, 2011, for approval by the Executive Officer of the Regional Water Board. The MRP will remain unchanged from the 2005 Permit (thereby incorporating, by reference, the applicable requirements) solely with regards to the frequency and of parameters (except algae testing) of the receiving water monitoring program until the implementation plan for the comprehensive Watershed-wide Monitoring Program is approved by the Executive Officer.

To achieve the goals of the comprehensive Watershed-wide Monitoring Program, changes to the Receiving Water Monitoring Requirements for Las Virgenes Municipal Water District's Tapia Water Reclamation Facility may be necessary to fulfill the goals of the watershed-wide monitoring program, while retaining the compliance monitoring component required to evaluate compliance with the NPDES permit. Revisions to the Discharger's Receiving Water Monitoring Program will be made under the direction of USEPA and the Executive Officer of Regional Water Board, as necessary, to accomplish these goals, and may include a reduction or increase in the number of parameters to be monitored, the frequency of monitoring, and/or the number of samples collected.

2. In coordination with the Los Angeles County Public Works and other interested stakeholders in the Malibu Creek and Los Angeles River Watersheds, the Discharger shall conduct instream bioassessment monitoring once a year, during the spring/summer period (unless an alternate sampling period is approved by the Executive Officer). Over time, bioassessment monitoring will provide a measure of the physical condition of the waterbody and the integrity of its biological communities.

   A. The bioassessment program shall include an analysis of the community structure of the instream macroinvertebrate assemblages, algal community (benthic diatoms and soft algae, including percent cover and biomass) and physical habitat assessment at the monitoring stations RSW-MC001U; RSW- MC 002D, and RSW-MC003D, RSW-MC004D, RSW-MC007D, RSW-MC009D, RSW-MC011D, RSW-MC013D for Malibu Creek.

      This program shall be implemented by appropriately trained staff. Alternatively, a professional subcontractor qualified to conduct bioassessments may be selected to perform the bioassessment work for the Discharger. Analyses of the results of the bioassessment monitoring program, along with photographs of the monitoring site locations taken during sample collection, shall be submitted in the corresponding annual report. If another stakeholder, or interested party in the watershed subcontracts a qualified professional to conduct bioassessment monitoring during the same season and at the same location as specified in the MRP, then the Discharger may, in lieu of duplicative sampling, submit the data, a report interpreting the data, photographs of the site, and related QA/QC documentation in the corresponding annual report.

   B. The Discharger must provide a copy of their Standard Operation Procedures (SOPs) for the Bioassessment Monitoring Program to the Regional Water Board upon request. The document must contain step-by-step field, laboratory and data entry procedures, as well as, related QA/QC procedures. The SOP must also include specific information about each bioassessment program including:

assessment program description, its organization and the responsibilities of all its personnel; assessment project description and objectives; qualifications of all personnel; and the type of training each member has received.

C. Field sampling must conform to the SOP established for the California Stream Bioassessment Procedure (CSBP) or more recently established sampling protocols, such as used by the Surface Water Ambient Monitoring Program (SWAMP). Field crews shall be trained on aspects of the protocol and appropriate safety issues. All field data and sample Chain of Custody (COC) forms must be examined for completion and gross errors. Field inspections shall be planned with random visits and shall be performed by the Discharger or an independent auditor. These visits shall report on all aspects of the field procedure with corrective action occurring immediately.

D. A taxonomic identification laboratory shall process the biological samples that usually consist of subsampling organisms, enumerating and identifying taxonomic groups and entering the information into an electronic format. The Regional Water Board may require QA/QC documents from the taxonomic laboratories and examine their records regularly. Intra-laboratory QA/QC for subsampling, taxonomic validation and corrective actions shall be conducted and documented. Biological laboratories shall also maintain reference collections, vouchered specimens (the Discharger may request the return of their sample voucher collections) and remnant collections. The laboratory should participate in an (external) laboratory taxonomic validation program at a recommended level of 10% or 20%. External QA/QC may be arranged through the California Department of Fish and Game's Aquatic Bioassessment Laboratory located in Rancho Cordova, California.

3. The Executive Officer of the Regional Water Board may modify the Monitoring and Reporting Program to accommodate the watershed-wide monitoring.

B. Tertiary Filter Treatment Bypasses

A. During any day that the filters are bypassed (also see Section VIII.4 of this MRP), LVMWD shall monitor the effluent for BOD, suspended solids, settleable solids, coliform, and oil and grease, on a daily basis, until it is demonstrated that the filter "bypass" has not caused an adverse impact on the receiving water.

B. LVMWD shall maintain a chronological log of tertiary filter treatment process bypasses, to including the following:

1. Date and time of bypass start and end;
2. Total duration time; and,
3. Estimated total volume bypassed.

C. LVMWD shall notify Regional Water Board staff by telephone within 24 hours of the filter bypass event.

D. LVMWD shall submit a written report to the Regional Water Board, according to the corresponding monthly self-monitoring report schedule. The report shall include, at a minimum, the information from the chronological log. Results from the daily effluent monitoring, required by Section B.1 above, shall be submitted to the Regional Water Board in the Discharger's self-monitoring report as soon as the results become available.

X. REPORTING REQUIREMENTS

A. General Monitoring and Reporting Requirements

1. The Discharger shall comply with all Standard Provisions (Attachment D) related to monitoring, reporting, and recordkeeping.

2. If there is no discharge during any reporting period, the report shall so state.

3. Each monitoring report shall contain a separate section titled "Summary of Non-Compliance" which discusses the compliance record and the corrective actions taken or planned that may be needed to bring the discharge into full compliance with waste discharge requirements. This section shall clearly list all non-compliance with discharge requirements, as well as all excursions of effluent limitations.

4. The Discharger shall inform the Regional Water Board well in advance of any proposed construction activity that could potentially affect compliance with applicable requirements.

B. Self Monitoring Reports (SMRs)

1. At any time during the term of this permit, the State or Regional Water Board may notify the Discharger to electronically submit Self-Monitoring Reports (SMRs) using the State Water Board's California Integrated Water Quality System (CIWQS) Program Web site (http://www.waterboards.ca.gov/ciwqs/index.html). Until such notification is given, the Discharger shall submit hard copy SMRs. The CIWQS Web site will provide additional directions for SMR submittal in the event there will be service interruption for electronic submittal.

2. The Discharger shall report in the SMR the results for all monitoring specified in this MRP under sections III through IX. The Discharger shall submit monthly and annual SMRs including the results of all required monitoring using USEPA-approved test methods or other test methods specified in this Order. If the Discharger monitors any pollutant more frequently than required by this Order (other than for process/operational control, start up, research, or equipment testing), the results of this monitoring shall be included in the calculations and reporting of the data submitted in the SMR.

3. Monitoring periods and reporting for all required monitoring shall be completed according to the following schedule:

Table E-9. Monitoring Periods and Reporting Schedule

Sampling Frequency	Monitoring Period Begins On…	Monitoring Period	SMR Due Date
Continuous	**Permit effective date**	**All**	**Submit with monthly SMR**
Daily	**Permit effective date**	**(Midnight through 11:59 PM) or any 24-hour period that reasonably represents a calendar day for purposes of sampling.**	**Submit with monthly SMR**
Weekly	**Sunday following permit effective date or on permit effective date if on a Sunday**	**Sunday through Saturday**	**Submit with monthly SMR**
Monthly	**First day of calendar month following permit effective date or on permit effective date if that date is first day of the month.**	**1st day of calendar month through last day of calendar month**	**By the 15th day of the third month after the month of sampling**
Quarterly	**Closest of January 1, April 1, July 1, or October 1 following permit effective date.**	**January 1 through March 31 April 1 through June 30 July 1 through September 30 October 1 through December 31**	**June15 September 15 December 15 March 15**
Semiannually	**Closest of January 1 or July 1 following permit effective date.**	**January 1 through June 30 July 1 through December 31**	**September 15 March 15**
Annually	**January 1 following permit**	**January 1 through December 31**	**April 15**

	effective date		
Biennially	**August 1, 2010**	**August 1, every other year**	**November 15**

4. Reporting Protocols. The Discharger shall report with each sample result the applicable *Reporting Level* (RL) and the current Method Detection Limit (MDL), as determined by the procedure in 40 C.F.R. part 136.

The Discharger shall report the results of analytical determinations for the presence of chemical constituents in a sample using the following reporting protocols:

a. Sample results greater than or equal to the RL shall be reported as measured by the laboratory (i.e., the measured chemical concentration in the sample).

b. Sample results less than the RL, but greater than or equal to the laboratory's MDL, shall be reported as "Detected, but Not Quantified," or DNQ. The estimated chemical concentration of the sample shall also be reported.

For the purposes of data collection, the laboratory shall write the estimated chemical concentration next to DNQ as well as the words "Estimated Concentration" (may be shortened to "Est. Conc."). The laboratory may, if such information is available, include numerical estimates of the data quality for the reported result. Numerical estimates of data quality may be percent accuracy (+ a percentage of the reported value), numerical ranges (low to high), or any other means considered appropriate by the laboratory.

c. Sample results less than the laboratory's MDL shall be reported as "Not Detected," or ND.

d. Dischargers are to instruct laboratories to establish calibration standards so that the ML value (or its equivalent if there is differential treatment of samples relative to calibration standards) is the lowest calibration standard. At no time is the Discharger to use analytical data derived from extrapolation beyond the lowest point of the calibration curve.

5. The Discharger shall submit SMRs in accordance with the following requirements:

a. The Discharger shall arrange all reported data in a tabular format. The data shall be summarized to clearly illustrate whether the facility is operating in compliance with interim and/or final effluent limitations. The Discharger is not required to duplicate the submittal of data that is entered in a tabular format within CIWQS. When electronic submittal of data is required and CIWQS does not provide for entry into a tabular format within the system, the Discharger shall electronically submit the data in a tabular format as an attachment.

b. The Discharger shall attach a cover letter to the SMR. The information contained in the cover letter shall clearly identify violations of the WDRs; discuss corrective actions taken or planned; and the proposed time schedule for corrective actions. Identified violations must include a description of the requirement that was violated and a description of the violation.

c. SMRs must be submitted to the Regional Water Board, signed and certified as required by the Standard Provisions (Attachment D), to the address listed below: (Reference the reports to Compliance File No. **4760** to facilitate routing to the appropriate staff and file.)

   California Regional Water Quality Control Board
   320 West 4th Street, Suite 200
   Los Angeles, CA 90013
   Attention: Information Technology Unit

C. Discharge Monitoring Reports (DMRs)

1. As described in Section X.B.1 above, at any time during the term of this permit, the State or Regional Water Board may notify the Discharger to electronically submit SMRs that will satisfy federal requirements for submittal of Discharge Monitoring Reports (DMRs). Until such notification is given, the Discharger shall submit DMRs in accordance with the requirements described below.

2. DMRs must be signed and certified as required by the standard provisions (Attachment D). The Discharger shall submit the original DMR and one copy of the DMR to the address listed below:

STANDARD MAIL	FEDEX/UPS/ OTHER PRIVATE CARRIERS
State Water Resources Control Board Division of Water Quality c/o DMR Processing Center PO Box 100 Sacramento, CA 95812-1000	State Water Resources Control Board Division of Water Quality c/o DMR Processing Center 1001 I Street, 15th Floor Sacramento, CA 95814

3. All discharge monitoring results must be reported on the official USEPA pre-printed DMR forms (EPA Form 3320-1). Forms that are self-generated will not be accepted unless they follow the exact same format of EPA Form 3320-1.

D. Other Reports

1. Annual Summary Report

By April 15 of each year, the Discharger shall submit an annual report containing a discussion of the previous year's influent/effluent analytical results and receiving water monitoring data. The annual report shall contain graphical and tabular summaries of the monitoring analytical data. The annual report shall also contain an overview of any plans for upgrades to the treatment plant's collection system, the treatment processes, or the outfall system. The Discharger shall submit a hard copy annual report to the Regional Water Board in accordance with the requirements described in subsection B.5 above.

Each annual monitoring report shall contain a separate section titled "Reasonable Potential Analysis" which discusses whether or not reasonable potential was triggered for pollutants which do not have a final effluent limitation in the NPDES permit. This section shall contain the following statement:" The analytical results for this sampling period did/ did not trigger reasonable potential." If reasonable potential was triggered, then the following information should also be provided:

a. A list of the pollutant(s) that triggered reasonable potential;
b. The Basin Plan or CTR criteria that was exceeded for each given pollutant;
c. The concentration of the pollutant(s);
d. The test method used to analyze the sample; and,
e. The date and time of sample collection.

2. The Discharger shall submit to the Regional Water Board, together with the first monitoring report required by this permit, a list of all chemicals and proprietary additives which could affect this waste discharge, including quantities of each. Any subsequent changes in types and/or quantities shall be reported promptly.

3. The Regional Water Board requires the Discharger to file with the Regional Water Board, within 90 days after the effective date of this Order, a technical report on preventive (failsafe) and contingency (cleanup) plans for controlling accidental discharges, and for minimizing the effect of such events. The technical report should:

   a. Identify the possible sources of accidental loss, untreated waste bypass, and contaminated drainage. Loading and storage areas, power outage, waste treatment unit outage, and failure of process equipment, tanks, and pipes should be considered.

   b. Evaluate the effectiveness of present facilities and procedures and state when they become operational.

   c. Describe facilities and procedures needed for effective preventive and contingency plans.

d. Predict the effectiveness of the proposed facilities and procedures and provide an implementation schedule contingent interim and final dates when they will be constructed, implemented, or operational.

ATTACHMENT F – FACT SHEET

Table of Contents

I. Permit Information F-3
II. Facility Description F-7
A. Description of Wastewater and Biosolids Treatment or Controls F-7
B. Discharge Points and Receiving Waters F-9
C. Summary of Existing Requirements and Self-Monitoring Report (SMR) Data F-12
D. Compliance Summary F-15
E. Planned Changes F-18
III. Applicable Plans, Policies, and Regulations F-18
A. Legal Authorities F-18
B. California Environmental Quality Act (CEQA) F-18
C. State and Federal Regulations, Policies, and Plans F-18
D. Impaired Water Bodies on CWA 303(d) List F-23
E. Other Plans, Polices and Regulations F-24
IV. Rationale For Effluent Limitations and Discharge Specifications F-30
A. Discharge Prohibitions F-30
B. Technology-Based Effluent Limitations F-33
1. Scope and Authority F-33
2. Applicable Technology-Based Effluent Limitations F-35
C. Water Quality-Based Effluent Limitations (WQBELs) F-36
1. Scope and Authority F-36
2. Applicable Beneficial Uses and Water Quality Criteria and Objectives F-36
3. Determining the Need for WQBELs F-51
4. WQBEL Calculations F-52
5. Whole Effluent Toxicity (WET) F-58
D. Final Effluent Limitations F-60
1. Satisfaction of Anti-Backsliding Requirements F-60
2. Satisfaction of Antidegradation Policy F-60
3. Stringency of Requirements for Individual Pollutants F-61
E. Interim Effluent Limitations F-69
F. Land Discharge Specifications F-69
G. Reclamation Specifications F-69
V. Rationale for Receiving Water Limitations F-69
A. Surface Water F-69
B. Groundwater F-69
VI. Rationale for Monitoring and Reporting Requirements F-70
A. Influent Monitoring F-70
B. Effluent Monitoring F-70
C. Whole Effluent Toxicity Testing Requirements F-71
D. Receiving Water Monitoring F-71
1. Surface Water F-71
2. Groundwater F-71
E. Other Monitoring Requirements F-71

VII. Rationale for Provisions F-72
A. Standard Provisions F-72
B. Special Provisions F-72
1. Reopener Provisions F-72
2. Special Studies and Additional Monitoring Requirements F-72
3. Best Management Practices and Pollution Prevention F-73
4. Construction, Operation, and Maintenance Specifications F-73
5. Special Provisions for Municipal Facilities (POTWs Only) F-74
6. Other Special Provisions F-74
7. Compliance Schedules F-75
VIII. Public Participation F-75
A. Notification of Interested Parties F-75
B. Written Comments F-75
C. Public Hearing F-75
D. Nature of Hearing F-76
E. Parties to the Hearing F-76
F. Public Comments and Submittal of Evidence F-76
G. Hearing Procedure F-76
H. Waste Discharge Requirements Petitions F-77
I. Information and Copying F-77
J. Register of Interested Persons F-77
K. Additional Information F-77

List of Tables

Table F-1. Facility Information F-3
Table F-2. Historic Effluent Limitations and Monitoring Data F-12
Table F-3a. Basin Plan Beneficial Uses F-19
Table F-3b. Basin Plan Beneficial Uses F-20
Table F-4. Summary of Technology-based Effluent Limitations F-35
Table F-5. Summary of Water Quality-based Effluent Limitations F-56
Table F-6. Summary of Final Effluent Limitations F-65

ATTACHMENT F – FACT SHEET

As described in section II of this Order, this Fact Sheet includes the legal requirements and technical rationale that serve as the basis for the requirements of this Order.

This Order has been prepared under a standardized format to accommodate a broad range of discharge requirements for Dischargers in California. Only those sections or subsections of this Order that are specifically identified as "not applicable" have been determined not to apply to this Discharger. Sections or subsections of this Order not specifically identified as "not applicable" are fully applicable to this Discharger.

I. PERMIT INFORMATION

The following table summarizes administrative information related to the facility.

Table F-1. Facility Information

WDID	4B190104001
Discharger	**Las Virgenes Municipal Water District**
Name of Facility	**Tapia Water Reclamation Facility**
Facility Address	731 Malibu Canyon Road Calabasas, CA 91302 **Los Angeles County**
Facility Contact, Title and Phone	**Brett Dingman, Water Reclamation Manager, (818) 251-2330**
Authorized Person to Sign and Submit Reports	John R. Mundy, General Manager (818) 251- 2100 David R. Lippman, Director of Facilities and Operations, (818) 251-2221
Mailing Address	4232 Las Virgenes Road Calabasas, CA 91302
Billing Address	**Same as above**
Type of Facility	**Publicly Owned Treatment Works**
Major or Minor Facility	**Major**
Threat to Water Quality	**1**
Complexity	**A**
Pretreatment Program	**Y**
Reclamation Requirements	**Yes**
Facility Permitted Flow	**16.1 Million Gallons per Day (MGD)**
Facility Design Flow	**16.1 MGD**
Watershed	**Malibu Creek and Los Angeles River Watersheds**
Receiving Water	**Malibu Creek and Los Angeles River**
Receiving Water Type	**Inland surface water**

A. Las Virgenes Municipal Water District (hereinafter Discharger or LVMWD) operates the Tapia Water Reclamation Facility (hereinafter Facility or Tapia WRF), a Publicly Owned Treatment Works (POTW). Tapia WRF is jointly owned by Las Virgenes and Triunfo Sanitation Districts (TrSD).

For the purposes of this Order, references to the "discharger" or "permittee" in applicable federal and State laws, regulations, plans, or policy are held to be equivalent to references to the Discharger herein.

B. The Facility discharges wastewater to Malibu Creek and Los Angeles River, waters of the United States, and is currently regulated by Order No. R4-2005-0074 and National Pollutant Elimination System (NPDES) permit No. CA0056014, which was adopted on November 3, 2005 and expires on June 10, 2010. The discharge is also regulated by Time Schedule Order (TSO) No. R4-2005-0075, which was also adopted on November 3, 2005 and expired on May 17, 2010. The TSO required the Discharger make necessary modifications to treatment units that will allow the Discharger to achieve full compliance with permit (Order No. 2005-0075) final effluent limitations for nitrate and bis(2-ethylhexyl)phthalate prescribed in NPDES Order No. R4-2005-0074, and prescribed interim effluent limitations for nitrate and bis(2-ethylhexyl)phthalate for the Tapia WRF to comply with until the final compliance date of May 17, 2010.

C. The Discharger filed a report of waste discharge and submitted an application, dated December 7, 2009, for renewal of its Waste Discharge Requirements (WDRs) and National Pollutant Discharge Elimination System (NPDES) permit.

D. Regulatory background. This Permit/Order contains discharge prohibition, a carry-over requirement from previous permits. The following highlights the background information and provides the regulatory context for the discharge prohibition.

Prior to Order No. 2005-0075, LVMWD discharged tertiary-treated wastewater, from the Tapia WRF under two separate Orders. Order No. 97-135 regulated the discharges to Malibu Creek and Order No. 99-066 regulated the discharges to Arroyo Calabasas which is a tributary to Los Angeles River. Order No. 97-135 and Order No. 99-066 were adopted by this Regional Water Board on November 3, 1997, and July 8, 1999, respectively. Those Orders served as the permit under the National Pollutant Discharge Elimination System (NPDES No. CA0053619). There were amendments to both Order:

1. <u>Order No. 97-135</u> (discharges to Malibu Creek): On April 13, 1998, the Regional Water Board adopted Order No. 98-030 amending Order No. 97-135. Again on December 9, 1999, the Regional Water Board adopted Order No. 99-142 amending Order No. 98-030.

    a. <u>Order No. 98-030</u>: Order No. 97-135 contains a provision prohibiting discharges from Tapia to Malibu Creek from May 1st to November 1st each year, except under certain conditions. Implementation of the prohibition under Order No. 97-135 was subject to further discussions among the Regional Water Board, National Marine Fisheries Service (NMFS), U.S. Fish and wildlife Service (USFWS), California Department of Fish and Game. After discussions among these departments, it was concluded that Las Virgenes apply for an incidental "take" permit as required by Endangered Species Act § 10(a)(1)(B). It was also recommended that a minimum flow of 2.5 ft^3/sec be maintained throughout the year to sustain endangered species.

Also, extreme weather conditions in the winter of 1998 caused the Lagoon to remain open for an extended period. Heavy rains at that time also resulted in more runoff into the Malibu Creek and Lagoon and created a condition resulting in less demand for reclaimed water during the period the discharge prohibition was in effect.

To address these issues, the following revisions were made to the Order No. 97-135 through Order No. 98-030.

i The Discharger shall not discharge as otherwise permitted by these requirements to Malibu Creek at any of its discharge points commencing either: (a) May 1st of each calendar year, or (b) the first natural closure of Malibu Lagoon by sand buildup, whichever is later, through and including October 31st of each calendar year. This prohibition will not be in effect during any of the following events:

<u>Discharge Prohibition:</u>

a. Treatment plant upset or other operational emergencies;
b. Storm events; or
c. The existence of minimal streamflow conditions that require flow augmentation in Malibu Creek to sustain endangered species.

ii. The Discharger shall submit an application for an Incidental Take Permit."

b. <u>Order No. 99-142</u>: On November 19, 1998, after a hearing on the petitions filed by the Discharger, the stake holders and the interested parties, the State Board adopted Order No. WQ 98-11 (remanded the Order No. 97-135) directing the Regional Water Board to make revisions consistent with the Findings and Conclusions in the remand order. As a result, the following are the revisions to Order No. 97-135, adopted through Order No. 99-142.

i. Two changes were made to Discharge Prohibition. The Discharge Prohibition was extended from April 15 to November 15; except during any of the following events: (No change in above mentioned exception 'a")

b. Storm events as determined by the Executive Officer; or

c. The existence of minimal streamflow conditions that require flow augmentation in Malibu Creek to sustain endangered species as determined by the Executive Officer."

ii. Order No. 98-030 strengthened the permit Finding No. 27 found in the Order No. 97-135 to reflect State Board's conclusion that unseasonable freshwater inputs from Tapia and other sources cause the Lagoon to flood and/or breach when it otherwise would not.

iii. Circumstances were defined under which exemptions to discharge prohibitions were allowed.

iv. Deleted a provision that otherwise would require the Discharger to apply for an Incidental Take Permit.

v. Changed the nitrate limitation as daily maximum from 10 mg/l to 8 mg/L.

vi. WQ 2001-03: The Discharger challenged the 8 mg/L limitation in a petition to the State Board dated January 7, 2000. The State Board upheld the petition, and on February 15, 2001, adopted Order No. WQ-2001-03, changing the final nitrate limitation back to 10 mg/L. The Order also stated that the Regional Water Board could, "after making adequate findings and otherwise complying with law" establish lower limitations in order to implement applicable water quality standards and protect beneficial uses in Malibu Creek and Lagoon.

2. Order No. 99-066 (discharges to Los Angeles River): During the discharge prohibition period for Malibu Creek and when there is no recycled water demand, the Discharger has the option to discharge up to 2 million gallons per day (mgd) of recycled water from Tapia WRF to the Los Angeles River. Order No. 99-066 contains a provision that allows the discharges from Tapia WRF to the Los Angeles River from May 1st to November 1st of each calendar year during the time the discharge prohibition applies to Malibu Creek. However, Order No. 98-030, adopted on April 13, 1998, was amended by Order No. 99-142 on December 9, 1999, to extend the discharge prohibition from May 1st through October 31st to April 15th though November 15th of each calendar year. Subsequently, the Discharger requested an amendment to the Order No. 99-066 to reflect the changed prohibition made on December 9, 1999.

   Also, the Discharger submitted a workplan on February 15, 2000, to relocate the discharge outfall from Dry Canyon Creek to a lined portion of the Arroyo Calabasas Creek.

   Order No. 00-046: On April 13, 2000, the Regional Water Board adopted Order No. 00-046 amending Order No. 99-066 and incorporated the requested changes. The discharge period was changed from May 1st through October 31st to April 15th through November 15th of each calendar year.

3. Order No. R4-2002-158: On September 26, 2002, the Regional Water Board adopted WDRs, Order No. R4-2002-158, for LVMWD, authorizing the discharge of tertiary-treated wastewater from its Tapia WRF to Percolation Ponds (Constructed Wetlands). The percolation ponds are located immediately adjacent to Malibu Creek near the Tapia WRF. LVMWD planned to rehabilitate the percolation ponds and convert them to constructed wetlands to treat a portion of Malibu Creek flows for the removal of pathogens and nutrients. Construction of the wetlands has been

cancelled because the necessary permit could not be obtained from the California Coastal Commission.

4. Order No. R4-2005-074: On November 3, 2005, the Regional Water Board adopted Order No. R4-2005-074, which superceded and consolidated the WDRs contained in Orders No. 97-135 and 99-066, thus regulating the discharges to Malibu Creek and the Los Angeles River under a single WDR and NPDES permit.

II. FACILITY DESCRIPTION

The Discharger owns and operates the Tapia Water Reclamation Facility (Tapia WRF), a tertiary wastewater treatment plant located at 731 Malibu Canyon Road, Calabasas, CA 91302. Attachments B-1 and B-2 show the location of the plant. The Tapia WRF currently serves an estimated population of 80,000 residents in western Los Angeles and eastern Ventura Counties (Agoura Hills, Calabasas, Hidden Hills, Thousand Oaks, and Westlake Village) with a service area of over 109 square miles. The wastewater is a mixture of domestic, commercial, and industrial wastewater that is pre-treated pursuant to 40 C.F.R. part 403. The Tapia WRF has a design capacity of 16.1 million gallons per day (MGD). In 2008, on average, Tapia WRF processed 8.95 MGD and discharged 4.03 MGD* to Malibu Creek and less than 0.1 MGD* to the Los Angeles River, except for June and July, when there was no discharge. (*These values represent the total annual volume of effluent discharged divided by 365 days.) Tapia WRF recycled the remainder of the tertiary-treated wastewater.

A. Description of Wastewater and Biosolids Treatment or Controls

1. The Tapia WRF uses the following process sequence: Coarse screening, grit removal, primary sedimentation, secondary treatment, tertiary treatment, chlorination, and dechlorination. For secondary treatment, Tapia employs an activated sludge process with nitrification and denitrification, followed by secondary clarification. Tertiary treatment includes coagulant addition, flocculation and physical filtration through a mono-media coal filter. Sodium hypochlorite solution is added for effluent disinfection, and sodium bisulfate is added for dechlorination. The return activated sludge (RAS), prior to returning to the secondary treatment system, undergoes a RAS treatment to facilitate nitrogen removal as well as to provide favorable conditions for the development of a facultative anaerobic biomass. Attachment C-1 shows the schematic of wastewater flow.

2. Primary and secondary sludges from the wastewater treatment at Tapia are pumped to the Rancho Las Virgenes Composting Facility (Rancho), also operated by Las Virgenes, located at 3700 Las Virgenes Road, approximately three miles north of Tapia. At Rancho, the sludge is anaerobically digested, dewatered, and composted to be used as soil amendment in plant nurseries, sod farms, and landscapes. In the past, centrate has shown to be a significant source of nitrogen for Tapia WRF, adding to its challenge of achieving compliance with the nitrate effluent limitation. As of September 2009, Tapia WRF's centrate undergoes a treatment provided by the

Centrate Treatment Unit (CTU), to remove nitrogen. The treatment provided by the CTU, which consists of two 800,000 gallon tanks connected to pumps and blowers, consists of aeration, mixing, settling, and decanting. The CTU operation includes centrate flow pacing, so that the centrate flow can be spread out over 24 hours a day, seven days a week. Centrate treatment and flow pacing are expected to level out the spikes in nitrogen concentrations in the effluent due to untreated centrate return flows, resulting in lower, more consistent nitrogen concentrations, as well as an increase in nitrogen removal efficiency.

Prior to 1993. the principal solids treatment route was aerobic digestion at Tapia and land application at the Rancho Las Virgenes Farm. After startup of the Rancho Las Virgenes Composting Facility in 1993, the solids were anaerobically digested, dewatered using centrifuges and then composted.

The individual wastewater treatment processes provided by Tapia WRF is further explained below:

a. *Primary sedimentation*. The main objective of primary sedimentation is to remove solids from the wastewater by gravity. The heavier solids (settleable solids) precipitate out and are scraped out of the primary sedimentation basin. The lighter solids float to the top and are skimmed off. However, some solids remain in suspension.

b. *NDN Activated sludge*. The activated sludge process is a treatment system in which the incoming wastewater is mixed with existing biological floc (microorganisms or activated sludge) in an aeration basin. Activated sludge converts non-settleable and dissolved organic contaminants into biological floc, which can then be removed from the wastewater with further treatment. The nitrification process converts ammonia nitrogen into nitrate plus nitrite nitrogen (inorganic nitrogen). The denitrification process converts the inorganic nitrogen into gaseous nitrogen, thus removing it from the wastewater.

c. *Secondary sedimentation with coagulation.* The main objective of secondary sedimentation is to remove biological floc from the wastewater. Chemicals, such as aluminum sulfate (alum), may be added as part of the treatment process to enhance solids removal. Alum causes the biological floc to combine into larger clumps (coagulate). This makes it easier to remove the floc.

d. *Inert media filtration*. The filtration process is used to remove or reduce suspended or colloidal matter from a liquid stream, by passing the water through a bed of graded granular material. Filters remove the solids that the secondary sedimentation process did not remove, thus, improving the disinfection efficiency and reliability.

e. *Chlorination*. In the past, gaseous chlorine was used as a disinfectant in the Tapia WRP. However, gaseous chlorine was replaced by liquid sodium hypochlorite. Disinfectant is added to the treated effluent prior to the filters to

destroy bacteria, pathogens and viruses, and to minimize algal growth in the filters. Additional disinfectant may be dosed prior to the serpentine chlorine contact chamber.

f. *Dechlorination*. Prior to discharge, sodium bisulfite is added to the treated effluent to remove residual chlorine.

g. *Sludge*. Typically, the waste activated sludge is sent to the composting facility. Alternatively, sludge can be either aerobically digested at Tapia and pumped to the Rancho Las Virgenes Farm, a 91-acre site located at 3240 Las Virgenes Road, for subsurface sludge injection, or sludge can be anaerobically digested at Rancho Las Virgenes for subsurface sludge injection. Sludge injection has not occurred since 2003.

B. Discharge Points and Receiving Waters

1. The Tapia WRF discharges the tertiary-treated wastewater to Malibu Creek and the Los Angeles River, waters of the United States at the following locations. Tapia WRF discharges to Malibu Creek primarily during winter times and occasionally to the Los Angeles River between April 15 to November 15 of each year when there is reduced demand on recycled water. Tapia's tertiary-treated effluent is reclaimed year-round for irrigation or industrial uses throughout the Malibu Creek Watershed and the excess is discharged directly into Malibu Creek from November 16th to April 14th of each year. During summer months, discharge from the Tapia WRF to the Los Angeles River is significantly reduced due to increased sales of reclaimed water to irrigation customers. The discharge prohibition for Malibu Creek is described in greater detail under Section VI.A of the Fact Sheet.

   <u>Malibu Creek, Malibu Lagoon and Surfrider Beach (Malibu Beach)</u>:

   Malibu Creek flows year round except during extended drought periods when flows in the Creek are minimal. The reach immediately above Malibu Lagoon usually dries each fall for periods ranging from a few weeks (wet years) to several months (dry years). The main stem of Malibu Creek originates as an overflow from Malibu Lake. Approximately one mile upstream from Tapia, Las Virgenes Creek joins Malibu Creek from the north. Malibu Creek passes through Malibu Creek State Park and the Tapia Segment of Malibu Creek State Park which is owned and operated by California Department of Parks and Recreation. Tapia discharges into Malibu Creek in the Monte Nido area at two points, one upstream and one downstream of the confluence with Cold Creek. Below Monte Nido, Malibu Creek courses through Malibu Canyon, spills over Rindge Dam, and emerges into a small alluvial plain, located adjacent to Sierra Retreat and the City of Malibu Civic Center. At its mouth, Malibu Creek forms a lagoon at the ocean shore. This area constitutes Malibu Lagoon State Park. The Surfrider Beach (Malibu Beach) is located adjacent to the Malibu Lagoon is owned by the State and managed by Los Angeles County.

The Malibu Lagoon is closed by a sand bar during low flow months. The sandbar reduces the amount of Creek and Lagoon water directly reaching the surfzone at Surfrider Beach. The input of imported water into the Malibu Creek watershed has resulted in significant freshwater flows into Malibu Lagoon. The high water level in the Lagoon caused flooding of roads and properties in the Malibu Colony area and saturated the ground under the Cross Creek Shopping Center, which resulted in a septic tank overflow. Due to freshwater inputs, in the past, the sand bar was breached periodically by California Department of Parks and Recreation during the dry season by artificial means. Artificial breaching of the sandbar has now been prohibited by the Army Corps of Engineers because it resulted in lower water levels, increased tidal interaction, increased salinity and potential impacts on Lagoon fauna and flora. Rapid changes in salinity after breaching are a likely cause of low species diversity in Lagoon invertebrates. During winter months, the Lagoon is usually open to the ocean due to sustained flow in Malibu Creek.

The following are the discharge points to Malibu Creek:

a. Discharge Point. 001 - Primary Discharge Point to Malibu Creek.

   Latitude: 34° 04' 55"
   Longitude:118° 42' 28"

   Discharge Point 001 is the primary discharge outfall into Malibu Creek and is located adjacent to the Tapia WRF. Tertiary-treated effluent from the Tapia WRF's effluent pond is discharged through this outfall.

   Waste discharged to Malibu Creek from Discharge Point 001 shall be limited to winter months from November 16 through April 14 of each calendar year.

b. Discharge Point 002 – Recycled Water Reservoir No. 2 Outfall.

   Latitude: 34° 08' 40"
   Longitude: 118° 41' 50"

   Discharge Point 002 is used to release surplus effluent from the LVMWD's Recycled Water Reservoir #2, which is an open reservoir used to temporarily store tertiary-treated wastewater prior to distribution to the recycled water system. Reservoir #2 is an earthen structure (with a concrete bottom) surrounded by a perimeter fence. The outfall is connected to the Reservoir #2 overflow via an approximately 1,400-feet-long, 48-inch diameter pipeline. Reservoir #2, located behind the LVMWD headquarters building, has a holding capacity of 14.7 million gallons, which is less than a two-day supply during the high demand in summer. Effluent is pumped from the Tapia effluent pump station to Reservoir #2 through 16-inch diameter and 26-inch diameter recycled water pipelines.

   Overflow from Reservoir #2 is discharged to Las Virgenes Creek, a tributary to Malibu Creek, near the LVMWD headquarters building located at 4232 Las

Virgenes Road in Calabasas. Discharges are infrequent from this outfall and are caused by rain events, during which storm water, including runoff from the surrounding areas, enters this open reservoir and causes overflow. Therefore, discharge from this outfall may consist of a mixture of tertiary-treated effluent, storm water, loose solids from the earthen structure, and possible contributions from avian sources. In addition, Reservoir #2 may offer additional treatment benefits for the tertiary-treated effluent being stored, depending on the length of the storage time.

Under Order No. 2005-0074, LVMWD did not discharge through Discharge Point 002.

c. Discharge Point 003 - Above Los Angeles County Gauging Station.

Latitude: 34° 40' 40"
Longitude: 118° 42' 03"

Discharge Point 003 is located along Malibu Creek, above the Los Angeles County Gauging Station RSW-MC13, and is approximately 2000 feet from the Tapia WRF's effluent pond. The intake structure is adjacent to the Discharge Point 001 intake structure. When Outfall 003 is used, flow from the effluent pond passes through a concrete flume and then into a 10-inch diameter dedicated pipeline, which conveys the flow to the Outfall 003. Outfall 003 was established along with the percolation ponds to offer a bypass option in times of extremely high flow conditions to regulate flow and protect the pond structures. Discharge through this outfall is infrequent and last occurred in February 2005.

Los Angeles River Discharge:

LVMWD moved Discharge Point 005 from Dry Canyon Creek to a location further downstream, in a fully-lined section of the Arroyo Calabasas Creek to eliminate the potential impacts of the discharge on the soft-bottomed portions of Dry Canyon Creek. Order No. 99-066 was amended on April 13, 2000, through Order No. 00-046, to incorporate this new discharge location.

Discharge Point 005 – Discharge Point to Arroyo Calabasas Creek, a tributary to the Upper Los Angeles River.

Latitude: 34° 9' 21"
Longitude: 118° 38' 34"

The Discharger uses Discharge Point 005 or Outfall 005 during the discharge prohibition period (April 15th to November 15th) to dispose of excess recycled water. Discharge from Outfall 005, which is a storm drain terminus that feeds into Arroyo Calabasas Creek, may consist of a mixture of tertiary-treated effluent from Reservoir #2 and from the suction header as well as flows from other sources conveyed through the storm drain. Since Reservoir #2 is an open reservoir of earthen

structure, flows from the reservoir may contain rainwater (including stormwater runoff from the vicinity), contributions from avian sources, loose solids from the earthen structure, in addition to the tertiary-treated effluent. As indicated above, Reservoir #2 may also offer additional treatment benefits for the tertiary-treated effluent being stored, depending on the length of storage time.

The following describes the processes involved in conveying the tertiary-treated effluent from the Tapia WRF to Outfall 005. Effluent from the Tapia WRF is pumped via the Tapia effluent pump station to Reservoir #2 (using 16-inch diameter and 12-inch diameter recycled water pipelines) or directly to the recycled water pump station suction header and then to the recycled water distribution system. Water in Reservoir #2 is stored until it is fed to the recycled water pump station. Excess recycled water in the recycled water distribution system's pipeline is conveyed to an underground storm drain that eventually daylights into an open channel known as Arroyo Calabasas. The location where the storm drain daylights is near Valley Circle Blvd and the 101 Freeway. The location where the recycled water distribution system's pipeline connects to the underground storm drain is in Parkway Calabasas near the intersection with Park Sorrento.

A schematic of the conveyance of the effluent to the various Discharge Points is included in Attachment C-3.

C. Summary of Existing Requirements and Self-Monitoring Report (SMR) Data

Following are the effluent limitations contained in Order No. R4-2005-074 for discharges from Discharge Points No. 001, 002, 003, and 005 and representative monitoring data from the term of Order No. R4-2005-074 , according to the Report of Waste Discharge (ROWD):

Table F-2. Historic Effluent Limitations and Monitoring Data

(Unless otherwise noted, the effluent limitations in Table F-2 are applicable to all Discharge Points. "MC" (Malibu Creek) indicates that the effluent limitation is applicable to Discharge Points 001, 002, and 003 only. "LR" (Los Angeles River) indicates that the effluent limitation is applicable to Discharge Point 005 only. "TSO" indicates the interim effluent limitations contained in the TSO Order No. 2005-0075. "PI" indicates the interim effluent limitations contained in Order No. 2005-0074.

Parameter	Units	Effluent Limitation			Monitoring Data (From November. 2005 – To June 2009)		
		Average Monthly	Ave. Weekly	Max. Daily	Highest Average Monthly Discharge	Average Daily Discharge	Highest Daily Discharge
pH	Ph units	--	--	6.5 – 8.5	7.5 high 7.3 low	7.2	7.7 high 6.5 low
Settleable solids	mL/L	0.1	--	0.2		<0.1	0.2

Parameter	Units	Effluent Limitation			Monitoring Data (From November. 2005 – To June 2009)		
		Average Monthly	Ave. Weekly	Max. Daily	Highest Average Monthly Discharge	Average Daily Discharge	Highest Daily Discharge
Total Suspended solids (TSS)	mg/L	5.0	--	10.0	<2.5	<1	5.6
Turbidity	mg/L	--	--	--	--	<1	3
Oil and grease	mg/L	5	--	10	18	<3	18
BOD_5 20°C	mg/L	10	--	20	<3	<2.5	7.4
Dissolved oxygen	mg/L	--	--	--	13.8	8.0	13.8
Total residual chlorine	mg/L	--	--	0.1	--	<0.1	<0.1
Temperature	°F	--	--	86	82 high 69 low	7.1	81 high 75 low
Detergent (as MBAS)	mg/L	0.5 MC 0.5 LR	--	--	<0.1	<0.1	<0.1
Surfactant (CTAS)	mg/L	--	--	--	0.75	<0.2	0.75
Total Coliform	MPN/ 100 mL	--	--	--	--	<1.1	12
Fecal Coliform	MPN/ 100 mL	--	--	--	--	<1.1	2.2
E. Coli	MPN/ 100 mL	--	--	--	--	<1.1	1.1
Total dissolved solids	mg/L	2,000- MC 950- LR	--	--	1010	768	1010
Chloride	mg/L	500- MC 190- LR	--	--	177	144	177
Sulfate	mg/L	500- MC 300- LR	--	--	324	216	324
Boron	mg/L	2- MC 1.5- LR	--	--	0.7	0.4	0.7
Fluoride	mg/L	1.6- LR	--	--	0.80	0.47	0.80
Total ammonia as N	mg/L	*	--	*	0.3	<0.2	0.3
TKN	mg/L	--	--	--	1.2	0.7	1.2
Nitrate + Nitrite as N	mg/L	8- MC	--	--	16	10	16
Nitrite (as N)	mg/L	1- LR	--	--	0.03	<0.01	0.03
Nitrate (as N)	mg/L	8- LR 14.3- TSO	--		16	10	16
Total Phosphorus	mg/L	3	--	4	4	3	4
Orthophosphate	mg/L	--	--	--	3.1	2.7	3.1

Parameter	Units	Effluent Limitation			Monitoring Data (From November. 2005 – To June 2009)		
		Average Monthly	Ave. Weekly	Max. Daily	Highest Average Monthly Discharge	Average Daily Discharge	Highest Daily Discharge
Salinity	mg/L	--	--	--	600	426	600
Perchlorate	µg/L	--	--	--	2	<2	2
1,4-Dioxane	µg/L	--	--	--	1.8	1.45	1.8
1,2,3-Trichloropropane	µg/L	--	--	--	0.058	<0.015	0.058
MTBE	µg/L	--	--	--	<5	<3	<5
Dichlorobromomethane	µg/L	46 62-PI	--	64	78	34	78
Cyanide	µg/L	4.6 10-PI	--	9.9	10	<5	10
Selenium	µg/L	3.4 12-PI	--	9.5	3	<2	3
Mercury	µg/L	0.051 0.6-PI	--	0.151-MC 0.163-LR	0.2	<0.02	0.2
Copper	µg/L	30-LR 17-LR	--	--	13	<7	13
Lead	µg/L	10-LR 22-LR 62-LR	--	32- LR	6	0.7	6
Cadmium	µg/L	4- LR 3.1--LR	--	12- LR	0.7	<0.4	0.7
Zinc	µg/L	159-LR	--	--	60		60
Arsenic	µg/L	--	--	--	7	<2.5	7
Chromium	µg/L	--	--	--	9	<1	9
Nickel	µg/L	--	--	--	7	4	7
Hardness (as $CaCO_3$)	mg/L	--	--	--	400	307	400
Bromoform	µg/L	--	--	--	3.6	<1.2	3.6
Dibromochloromethane	µg/L	--	--	--	32	<16	32
Chloroform	µg/L	--	--	--	84	40	84
Methyl bromide	µg/L	--	--	--	1	<1	1
Methylene chloride	µg/L	--	--	--	2.1	<0.7	2.1
Diethyl phthalate	µg/L	--	--	--	3.1	<4	3.1
Bis(2-Ethylhexyl)Phthalate	µg/L	5.9- MC 4- LR 14-TSO		17- MC	20		20
Bromoform	µg/L	--	--	--	3.6		3.6
Chloroform	µg/L	--	--	--	68		68
Aldrin	µg/L	--	--	--	0.03		0.03
Alpha-BHC	µg/L	--	--	--	0.01		0.01
4,4'-DDE	µg/L	--	--	--	0.02		0.02
4,4'-DDD	µg/L	--	--	--	0.02		0.02

Parameter	Units	Effluent Limitation			Monitoring Data (From November. 2005 – To June 2009)		
		Average Monthly	Ave. Weekly	Max. Daily	Highest Average Monthly Discharge	Average Daily Discharge	Highest Daily Discharge
Dieldrin	µg/L	--	--	--	0.03		0.03
Endrin	µg/L	--	--	--	0.04		0.04
Heptachlor	µg/L	--	--	--	0.02		0.02
2,3,7,8-TCDD	ng/L	--	--	--	<0.0054	<0.00015	<0.0054

*Effluent limitations for total ammonia were not calculated in Order No. 2005-0074. Instead, Order No. 2005-0074 included a narrative that required the Discharger to comply with the updated ammonia water quality objectives in the Basin Plan, Table 3-3, which resulted from Resolution No. 2002-011 adopted by the Regional Water Board on April 25, 2002, based on effluent pH and temperature and receiving water ammonia nitrogen sample results.

All other priority pollutants were not detected in the effluent.

D. Compliance Summary

Monitoring data from November 5 2005 to January 2010, indicate that the Discharger has complied with the final and interim effluent limitations of Order No. R4-2005-0074 , and with the interim effluent limitations of Time Schedule Order (TSO) No. R4-2005-0075, with the following exceptions.

Exceedances of Effluent Limitations of Order No. R4-2005-0074

<u>Total Dissolved Solids</u>

- Average monthly limitation of 2,000 mg/L on February 25, 2009

<u>Total Suspended Solids</u>

- Average monthly limitation of 5 mg/L on February 25, 2009.

<u>Total Phosphorus</u>

- Average monthly limitation of 3 mg/L on March 13, 2007 and February 29, 2008.

Dichlorobromomethane

- Interim average monthly limitation of 62 µg/L on September 2, 2009, and in January 2010.
- In addition to the exceedances of the interim limitation, the Discharger did not provide the required progress of special studies or concrete, specific actions undertaken to achieve final effluent limitation by May 18, 2010.

Exceedances of Effluent Limitations of Time Schedule Order No. R4-2005-0075

TSO No. R4-2005-0075 was adopted concurrently with the NPDES Permit Order No. R4-2005-0074 . This TSO required the Discharger to:

1. By May 18, 2010, achieve compliance with the nitrate and bis(2-ethylhexyl)phthalate interim limitations for the duration of the TSO, and with the final effluent limitations specified in Order No. R4-2005-0074.

2. Within 120 days after the adoption of this TSO (by March 5, 2004), pursuant to CWC section 13263.3, submit a pollution prevention plan (PPP) workplan with a time schedule for implementation for approval of the Executive officer; and

3. Submit a detailed workplan and quarterly progress reports of the Discharger's efforts to achieve compliance with the final effluent limitations for nitrate and bis(2-ethylhexyl)phthalate.

4. By March 27, 2006, submit a detailed workplan, detailing how the Discharger will increase diversion of its wastewater to the Los Angeles, and/or other diversion of wastewater, during the weeks following periods of extended rainfall, during which time there is no demand for recycled water and the prohibition is in place.

5. By March 3, 2006, submit the results of the study on alternatives to discharging to Malibu Creek.

Monitoring data from November 2005 to December 2009 indicate that the Discharger has complied with the interim effluent limitations of Order No. R4-2005-0075, with the following exceptions:

Nitrate as N

- Average monthly limitation of 14.3 mg/L on March 31, 2006.
- Maximum daily limitation of 15.4 mg/L on March 8, 2006.

Bis(2-ethylhexyl)phthalate

- Monthly average limitation of 14 mg/L on January 31, 2006, and February 28, 2006.

Sanitary Sewer Overflows (SSO) and Spills

During the term of Order No. R4-2005-074, in accordance with applicable permits, the Discharger has reported a sewage spill incident in the Las Virgenes Municipal Water District collection system over the years. The State Water Resources Control Board's CIWQS SSO database) reported two spills (total volume of 700 gallons, of which 600 gallons were recovered) for all sewers maintained by the Discharger, between 2006 and 2010.

The first spill occurred on February 25, 2008, as a result of one of the anaerobic digesters overflowing due to a faulty level sensor. To address this issue, the digester level measurement system has since been replaced and the alarm set at a lower level. The Facility's routine inspections include visual observation of the digester levels to check for proper operation.

The second spill occurred on October 28, 2009, at the Centrate Treatment Unit, as a result of an improper flow meter reading, which caused a drain valve to fully open and overwhelm the sewer system. The improper flow meter reading was due to air in the liquid. To prevent a similar malfunction in the future, a SCADA lock has been installed on the controls to the system so that the valve would not open during aeration.

Appropriate enforcement is being evaluated by the Regional Water Board.

Discharge to Malibu Creek via Discharge Point 001 during Discharge Prohibition Period (April 16 to November 15th of each calendar year).

1. The Discharger provided the necessary notifications to the Regional Water Board when the Malibu Creek level dropped below 2.5 cfs at the Malibu Creek Gauging Station and discharged recycled water from the Tapia Reclamatin Facility during the discharge prohibition period, under the authorization of the Executive Officer of the Regional Water Board, as follows:
   - A total of 2,808,066 gallons in October 2009.
   - A total of 5,437,681 gallons in September 2009.
   - A total of 921, 012 gallons in July 2009.
   - A total of 0.59 million gallons in September 2008
   - A total of 0.55 million gallons in September 2007.

2. A failure on a recycled water transmission main resulted in a temporary 1.43 million gallons of discharge of fully treated effluent to Malibu Creek on September 25th and 26th, 2008. The transmission main conveys treated recycled water from the Tapia WRF to the distribution system for beneficial reuse and diverts flow away from Malibu Creek druing the Malibu Creek discharge prohibition period.

E. Planned Changes

The recent major upgrade at the Tapia WRF included a set of three facilities, which was completed in August 2009, and began operation in September 2009, for the purpose of enhancing nitrogen removal in the wastewater effluent. The facilities include the Biological Nutrient Reduction (BNR) Facility, Return Activated Sludge (RAS) Treatment Unit, and Centrate Treatment Unit. The upgrade was necessary for the Discharger to achieve compliance with nitrate effluent limitation in R4-2005-0075. The Discharger is in the process of evaluating treatment options to achieve compliance with dichlorobromomethane and total trihalomethane.

III. APPLICABLE PLANS, POLICIES, AND REGULATIONS

The requirements contained in the proposed Order are based on the requirements and authorities described in this section.

A. Legal Authorities

This Order is issued pursuant to section 402 of the federal Clean Water Act (CWA) and implementing regulations adopted by the U.S. Environmental Protection Agency (USEPA) and chapter 5.5, division 7 of the California Water Code (commencing with section 13370). It shall serve as an NPDES permit for point source discharges from this facility to surface waters. This Order also serves as Waste Discharge Requirements (WDRs) pursuant to article 4, chapter 4, division 7 of the California Water Code (commencing with section 13260).

B. California Environmental Quality Act (CEQA)

Under California Water Code section 13389, this action to adopt an NPDES permit is exempt from the provisions of CEQA, Public Resources Code sections 21100 through 21177.

C. State and Federal Regulations, Policies, and Plans

1. **Water Quality Control Plans.** The Regional Water Quality Control Board (Regional Water Board) adopted a Water Quality Control Plan for the Los Angeles Region (hereinafter Basin Plan) on June 13, 1994 that designates beneficial uses, establishes water quality objectives, and contains implementation programs and policies to achieve those objectives for all waters addressed through the plan. In addition, the Basin Plan implements State Water Resources Control Board (hereinafter, the State Water Board or SWRCB) Resolution No. 88-63, which established State policy that all waters, with certain exceptions, should be considered suitable or potentially suitable for municipal or domestic supply. Beneficial uses applicable to the Malibu Creek and Los Angeles River are as follows:

Table F-3a. Basin Plan Beneficial Uses – Surface Waters

Discharge Point	Receiving Water Name	Beneficial Use(s)
002	Las Virgenes Creek (Hydro Unit 404.22)	Existing: Water contact recreation (REC-1)[1]; noncontact water recreation (REC-2); warm freshwater habitat (WARM); wild life habitat (WILD); rare, threatened, or endangered species (RARE); and wetland habitat (WET)[3] Potential: Municipal and domestic water supply (MUN) [4]; cold freshwater habitat (COLD); migration of aquatic organisms (MIGR)[2]; and spawning, reproduction, and/or early development (SPWN).
001-003	Malibu Creek (Hydro Unit 404.21)	Existing: REC-1[1]; REC-2; WARM; COLD; WILD; RARE; MIGR[2]; SPWN; and WET[3] Potential: MUN [4].
001-003	Malibu Lagoon (Hydro Unit 404.21)	Existing: Navigation (NAV); REC-1[1]; REC-2; estuarine habitat (EST); marine habitat (MAR); WILD; RARE [5]; MIGR[2]; SPWN; and WET[3].
001-003	Malibu Beach (Surfrider Beach) (Hydro Unit 404.21)	Existing: NAV; REC-1[1]; REC-2; commercial and sport fishing (COMM); MAR; WILD; MIGR[2]; SPWN [6]; and shellfish harvesting (SHELL) [7].
005	Los Angeles River upstream of Figueroa Street (Hydro Unit 405.21)	Existing: groundwater recharge (GWR); REC-1[1]; REC-2; WARM; WILD; and WET[3]. Potential: MUN[4] ; and industrial service supply (IND).
005	Los Angeles River downstream of Figueroa Street (Hydro Unit 405.15)	Existing: GWR; REC-1[1]; REC-2; and WARM Potential: MUN[4] ; IND; and WILD.
005	Los Angeles River to Estuary (Hydro Unit 405.12)	Existing: GWR; REC-1[1]; REC-2; RARE; WARM; MAR; WILD; and RARE. Potential: MUN[4] ; IND.; industrial process supply (PROC); MIGR; SPWN; and SHELL.
005	Los Angeles River Estuary (Hydro Unit 405.12)	Existing: IND; NAV; REC-1[1]; REC-2; COMM; EST; MAR; WILD; RARE [5]; MIGR; SPWN; and WET. Potential: SHELL.

Footnote:

[1] The Los Angeles County Department of Public Works posted signs prohibiting access to the Los Angeles River. However, there is public contact in the downstream areas; hence, the quality of treated wastewater discharged to both Malibu Creek and the Los Angeles River must be such that no health hazard is created.

[2] Aquatic organisms utilize estuary and coastal wetland, to a certain extent, for spawning and early development. This may include migration into areas, which are heavily influenced by freshwater inputs.

[3] This wetland habitat may be associated with only a portion of the waterbody. Any regulatory action would require a detailed analysis of the area.

[4] The potential municipal and domestic supply (p* MUN) beneficial use for the waterbody is consistent with the State Water Resources Control Board Order No. 88-63 and Regional Water Board Resolution No. 89-003; however, the Regional Water Board has only conditionally designated the MUN beneficial use of the surface water and at this time cannot establish effluent limitations designed to protect the conditional designation.

[5] One or more rare species utilize estuary and coastal wetlands for foraging and/or nesting.

[6] Most frequently used grunion spawning beaches. Other beaches may be used as well.

[7] Areas exhibiting large shellfish populations include Malibu, Point Dume, Point Fermin, white Point and Zuma Beach.

The beneficial uses of the receiving ground waters are as follows:

Table F-3b. Basin Plan Beneficial Uses – Ground Waters

Discharge Point	Receiving Water Name	Beneficial Use(s)
001 - 003	Santa Monica Mountains-Southern Slopes (DWR Basin No.[1] 4-22)	Malibu Valley Existing Beneficial Uses: Agricultural supply (AGR). Potential Beneficial Uses: MUN; and IND.
005	San Fernando Valley Basin (DWR Basin No.[1] 4-12)	West of Highway 405 Existing Beneficial Uses: MUN, IND, PROC, and AGR. East of Highway 405 (overall) Existing Beneficial Uses: MUN; IND; PROC; and AGR. Narrows area (below confluence of Verdugo Wash with the Los Angeles River) Existing Beneficial Uses: MUN; IND; PROC; and AGR.
005	Los Angeles Coastal Plain (DWR Basin No.[1] 4-11)	Central Basin Existing Beneficial Uses: MUN; IND; PROC; and AGR. West Coast Basin Existing Beneficial Uses: MUN; IND; PROC; and AGR.

Footnote:
[1]. Basins are numbered according to DWR Bulletin No. 118-80 (DWR, 1980).

Requirements of this Order implement the Basin Plan.

Ammonia Water Quality Objective (WQO). The 1994 Basin Plan provided water quality objectives for ammonia to protect aquatic life, in Tables 3-1 through 3-4. However, those ammonia objectives were revised on April 25, 2002, by the Regional Water Board with the adoption of Resolution No. 2002-011, *Amendment to the Water Quality Control Plan for the Los Angeles Region to Update the Ammonia Objectives for Inland Surface Waters (Including Enclosed Bays, Estuaries and Wetlands) with Beneficial Use Designations for Protection of Aquatic Lif*e. The ammonia Basin Plan amendment was approved by the State Water Board, the Office of Administrative Law, and USEPA on April 30, 2003, June 5, 2003, and June 19, 2003, respectively. On December 1, 2005, Resolution No. 2005-014, *Amendment to the Water Quality Control Plan for the Los Angeles Region to Revise the Early Life Stage Implementation Provision of the Freshwater Ammonia Objectives for Inland Surface Waters (Including Enclosed Bays, Estuaries and Wetlands) for Protection of Aquatic Life,* was adopted by the Regional Water Board. Resolution No. 2005-014 was approved by the State Water Board, the Office of Administrative Law, and USEPA on July 19, 2006, August 31, 2006, and April 5, 2007, respectively. Although the revised ammonia water quality objectives may be less stringent than those contained in the 1994 Basin Plan, they are still protective of aquatic life and are consistent with USEPA's 1999 ammonia criteria update.

On June 7, 2007, the Regional Water Board adopted Resolution No. 2007-005, Amendments to the Water Quality Control Plan – Los Angeles Region – To Incorporate Site-Specific Objectives for Select Inland Surface Waters in the San Gabriel River, Los Angeles River and Santa Clara River Watersheds. This amendment to the Basin Plan incorporates site-specific 30-day average objectives for ammonia along with corresponding site-specific early life stage implementation provisions for select waterbody reaches and tributaries in the Santa Clara, Los Angeles, and San Gabriel River watersheds. The State Water Board, OAL, and USEPA approved this Basin Plan amendment on January 15, 2008, May 12, 2008, and March 30, 2009, respectively. Resolution No. 2007-005 became effective on April 23, 2009.

Chloride WQO. The 1994 Basin Plan contained water quality objectives for chloride in Table 3-8. However, the chloride objectives for some waterbodies were revised on January 27, 1997, by the Regional Board, with the adoption of Resolution No. 97-02, *Amendment to the Water Quality Control Plan for the Los Angeles Region to Incorporate a Policy for Addressing Levels of Chloride in Discharges of Wastewaters*. Resolution No. 97-02 was approved by the State Board, the Office of Administrative Law, and USEPA on October 23, 1997, January 9, 1998, and February 5, 1998,

respectively, and are now in effect. The chloride WQO was revised from 150 mg/L to 190 mg/L, for the following segments of the Los Angeles River:

a. Between Sepulveda Flood Control Basin and Figueroa Street (including Burbank Western Channel only), and

b. Between Figueroa Street and the estuary (including Rio Hondo below Santa Ana Freeway only).

The final effluent limitations for chloride prescribed in this Order are based on the revised chloride WQOs and apply at the end of pipe.

2. **National Toxics Rule (NTR) and California Toxics Rule (CTR).** USEPA adopted the NTR on December 22, 1992, and later amended it on May 4, 1995 and November 9, 1999. About forty criteria in the NTR applied in California. On May 18, 2000, USEPA adopted the CTR. The CTR promulgated new toxics criteria for California and, in addition, incorporated the previously adopted NTR criteria that were applicable in the State. The CTR was amended on February 13, 2001. These rules contain water quality criteria for priority pollutants.

3. **State Implementation Policy.** On March 2, 2000, the State Water Board adopted the *Policy for Implementation of Toxics Standards for Inland Surface Waters, Enclosed Bays, and Estuaries of California* (State Implementation Policy or SIP). The SIP became effective on April 28, 2000 with respect to the priority pollutant criteria promulgated for California by the USEPA through the NTR and to the priority pollutant objectives established by the Regional Water Board in the Basin Plan. The SIP became effective on May 18, 2000 with respect to the priority pollutant criteria promulgated by the USEPA through the CTR. The State Water Board adopted amendments to the SIP on February 24, 2005 that became effective on July 13, 2005. The SIP establishes implementation provisions for priority pollutant criteria and objectives and provisions for chronic toxicity control. Requirements of this Order implement the SIP.

4. **Alaska Rule.** USEPA has revised its regulation that specifies when new and revised State and tribal water quality standards (WQS) become effective for CWA purposes (40 C.F.R. § 131.21, 65 Fed. Reg. 24641 (April 27, 2000)). Under the revised regulation (hereinafter Alaska rule), new and revised standards submitted to USEPA after May 30, 2000, must be approved by USEPA before being used for CWA purposes. The final rule also provides that standards already in effect and submitted to USEPA by May 30, 2000, may be used for CWA purposes, whether or not approved by USEPA.

5. **Antidegradation Policy.** 40 C.F.R. §131.12 requires that the State water quality standards include an antidegradation policy consistent with the federal antidegradation policy. The State Water Board established California's antidegradation policy in State Water Board Resolution No. 68-16. This resolution incorporates the federal antidegradation policy where the federal policy applies

under federal law. Resolution No. 68-16 requires that existing water quality be maintained unless degradation is justified based on specific findings. The Regional Water Board's Basin Plan implements, and incorporates by reference, both the State and federal antidegradation policies. The permitted discharge must be consistent with the antidegradation provision of 40 C.F.R. §131.12 and State Water Board Resolution No. 68-16.

6. **Anti-Backsliding Requirements. CWA** Sections 402(o)(2) and 303(d) and 40 C.F.R. § 122.44(l) prohibit backsliding and require that effluent limitations, permit conditions, and standards in a reissued permit must be as stringent as those in the previous permit, with some exceptions in which limitations and conditions may be relaxed.

D. Impaired Water Bodies on CWA 303(d) List

On October 25, 2006, the State Water Board adopted a revised CWA 303(d) list. The 2006 303(d) list was partially approved by the USEPA on November 30, 2006. However, on March 8, 2007, USEPA partially disapproved the State's 303(d) list, by disapproving the State's omission of impaired waters that met federal listing regulations or guidance. USEPA is adding 64 waters and 37 associated pollutants to the State's 303(d) list. On June 28, 2007, USEPA transmitted the final approved 2004-2006 Section 303(d) List, which serves as the State's most recent list of impaired waterbodies. The list (hereinafter referred to as the 303(d) List) was prepared in accordance with Section 303(d) of the Federal Clean Water Act to identify specific impaired waterbodies where water quality standards are not expected to be met after implementation of technology-based effluent limitations on point sources.

<u>Malibu Creek:</u>
Malibu Beach, Malibu Creek, Malibu Lagoon, Malibu Lagoon Beach (Surfrider Beach) are on the 2006 303 (d) List. The following pollutants/stressors, from point and non-point sources, were identified as impacting the receiving waters:
(For footnotes, see the following page.)

1. Malibu Beach - Hydrologic Unit 404.21:
DDT (Fish consumption advisory for DDT)[a]; and indicator bacteria[b].

2. Malibu Creek - Hydrologic Unit 404.21:

Coliform bacteria[b]; Fish barriers (Fish passage)[a]; nutrients (algae)[a]; scum/foam-unnatural[a]; sedimentation/siltation[a]; selenium[a]; sulfates[a]; and trash[a].

3. Malibu Lagoon - Hydrologic Unit 404.21:

Benthic community effects[a]; coliform bacteria[b]; eutrophic[a]; pH (possible sources might be septic systems, storm drains, and birds) [a]; shellfish harvesting advisory; swimming restrictions[a]; and viruses (enteric)[a].

4. Malibu Lagoon Beach (Surfrider Beach) - Hydrologic Unit 404.21:

Coliform bacteria[b]; DDT (Fish consumption advisory for DDT)[a]; and PCBs (Fish consumption advisory for PCBs)[a].

Los Angeles River:

Los Angeles River, Los Angeles River Estuary, and their tributaries are on the 2006 303(d) List. The following pollutants/stressors, from point and non-point sources, were identified as impacting the receiving waters:

1. Los Angeles River Reach 4 (Sepulveda Drive to Sepulveda Dam) – Hydrologic Unit 405.21:
Ammonia[b]; coliform bacteria[a]; copper[b]; lead[b]; nutrients (algae) [b]; and trash[a].

2. Los Angeles River Reach 3 (Figueroa Street to Riverside Drive) – Hydrologic Unit 405.21:
Ammonia[b]; copper[b]; lead[b]; nutrients (algae) [b]; and trash[a].

3. Los Angeles River Reach 2 (Carson to Figueroa Street) – Hydrologic Unit 405.15: Ammonia[b]; coliform bacteria[a]; copper[b]; lead[b]; nutrients (algae) [b]; oil[a]; and trash[a].

4. Los Angeles River Reach 1 (Estuary to Carson Street) – Hydrologic Unit 405.12:
Ammonia[b]; cadmium[b]; coliform bacteria[a]; copper, dissolved[b]; cyanide[a]; diazinon[a]; lead[b]; nutrients (algae) [b]; pH[a]; trash[a]; and zinc, dissolved[a].

5. Los Angeles River Estuary (Queensway Bay) – Hydrologic Unit 405.12:

Chlordane (sediment; historical use of pesticides and lubricants)[a]; DDT (sediment; historical use of pesticides and lubricants)[a]; lead (sediment; historical use of pesticides and lubricants), PCBs (sediment; historical use of pesticides and lubricants)[a]; sediment toxicity[a]; trash[a]; and zinc (sediment)[a].

The Regional Water Board adopted the 2008 303(d) list of impaired waterbodies on July 16, 2009, and submitted the list to the State Water Board for approval.

Footnotes:
[a] TMDL requirements status: [a] is requiring TMDLs.
[b] TMDL requirements status: [b] is being addressed by USEPA-approved TMDL.

E. Other Plans, Polices and Regulations

1. **Sources of Drinking Water Policy**. On May 19, 1988, the State Water Board adopted Resolution No. 88-63, *Sources of Drinking Water (SODW) Policy*, which established a policy that all surface and ground waters, with limited exemptions, are suitable or potentially suitable for municipal and domestic supply. To be consistent with State Water Board's SODW policy, on March 27, 1989, the Regional Water Board adopted Resolution No. 89-03, *Incorporation of Sources of Drinking Water*

Policy into the Water Quality Control Plans (Basin Plans) – Santa Clara River Basin (4A)/ Los Angeles River Basin (4B).

Consistent with Regional Water Board Resolution No. 89-03 and State Water Board Resolution No. 88-63, in 1994 the Regional Water Board conditionally designated all inland surface waters in Table 2-1 of the 1994 Basin Plan as existing, intermittent, or potential for Municipal and Domestic Supply (MUN). However, the conditional designation in the 1994 Basin Plan included the following implementation provision: "no new effluent limitations will be placed in Waste Discharge Requirements as a result of these [potential MUN designations made pursuant to the SODW policy and the Regional Water Board's enabling resolution] until the Regional Water Board adopts [a special Basin Plan Amendment that incorporates a detailed review of the waters in the Region that should be exempted from the potential MUN designations arising from SODW policy and the Regional Water Board's enabling resolution]." On February 15, 2002, the USEPA clarified its partial approval (May 26, 2000) of the 1994 Basin Plan amendments and acknowledged that the conditional designations do not currently have a legal effect, do not reflect new water quality standards subject to USEPA review, and do not support new effluent limitations based on the conditional designations stemming from the SODW Policy until a subsequent review by the Regional Water Board finalizes the designations for these waters. This permit is designed to be consistent with the existing Basin Plan.

2. **Secondary Treatment Regulations**. Part 133 of 40 C.F.R. establishes the minimum levels of effluent quality to be achieved by secondary treatment. These limitations, established by USEPA, are incorporated into this Order, except where more stringent limitations are required by other applicable plans, policies, or regulations.

3. **Storm Water**. [Reserved for future storm water conditions].

4. **Sanitary Sewer Overflows**. The Clean Water Act prohibits the discharge of pollutants from point sources to surface waters of the United States unless authorized under an NPDES permit. (33 U.S.C. §§1311, 1342). The State Water Board adopted Statewide General Waste Discharge Requirements (WDRs) for Sanitary Sewer Systems, Water Quality Order No. 2006-0003 on May 2, 2006, to provide a consistent, statewide regulatory framework to address Sanitary Sewer Overflows (SSOs). The WDR requires public agencies that own or operate sanitary sewer systems to develop and implement sewer system management plans and report all SSOs to the State Water Board's online SSO database.

   The requirements contained in this Order in Sections VI.C.3.b, VI.C.4, and VI.C.5.c.6. are intended to be consistent with the requirements in the SSO WDR. The Regional Water Board recognizes that there are areas of overlapping interest between the NPDES permit conditions and the SSO WDR requirements. The requirements of the SSO WDR are considered the minimum thresholds (see Finding 11 of WQ Order No. 2006-0003). The Regional Water Board will accept the documentation prepared by the Permittee under the SSO WDR for compliance purposes, as satisfying the requirements in Sections VI.C.3.b, VI.C.4, and VI.C.5.c.6

of this Order, provided that any more specific or stringent provisions enumerated in this Order, have also been addressed.

5. **Watershed Management.** This Regional Water Board has been implementing a Watershed Management Approach (WMA), to address water quality protection in the Los Angeles Region, as detailed in the Watershed Management Initiative (WMI). The WMI is designed to integrate various surface and ground water regulatory programs while promoting cooperative, collaborative efforts within a watershed. It is also designed to focus limited resources on key issues and use sound science. Information about the Malibu Creek and Los Angeles River Watersheds and other watersheds in the region can be obtained from the Regional Water Board's web site at http://www.waterboards.ca.gov/losangeles/water_issues/programs/regional_program/index.shtml#Watershed.

6. **Relevant Total Maximum Daily Loads**. A Total Maximum Daily Load (TMDL) is a determination of the amount of a pollutant, from point, non-point, and natural background sources, including a margin of safety that may be discharged to a water quality-limited water body. Section 303(d) of the CWA established the TMDL process. The statutory requirements are codified at 40 C.F.R. part 130.7. TMDLs must be developed for the pollutants of concern, which impact the water quality of water bodies on the 303(d) List.

   a. Malibu Creek TMDLs

      1. Bacteria TMDL for Malibu Creek. The TMDL schedule, under the amended consent decree, Heal the Bay, Santa Monica Bay Keeper, et al. v. Browner, et al. (March 23, 1999), necessitated a bacteria TMDL to be established by March 22, 2003. On December 13, 2004, the Regional Water Board adopted Resolution No. 2004-019R, *Amendment to the Water Quality Control Plan for the Los Angeles Region to incorporate a Total Maximum Daily Load for Bacteria in the Malibu Creek Watershed* (hereinafter Malibu Creek bacteria TMDL). The TMDL was approved by the State Water Board, OAL, and USEPA on September 22, 2005, December 1, 2005, and January 10, 2006, respectively, and became effective on March 23, 2004.

      2. Nutrient TMDL for Malibu Creek established by EPA. A nutrient TMDL for Malibu Creek for total nitrogen and total phosphorous was developed and established by EPA in March 2003. The EPA TMDL included a numeric target of 1 mg/L for total nitrogen during the summer (April 15 to November 15) to control algal biomass, and a winter numeric target of 8 mg/L, based on the Basin Plan numeric objective of 10 mg/L (with an implicit 20% margin of safety). EPA also established a 0.1 mg/L numeric target for total phosphorous during the summer and no target during winter months. According to the EPA's TMDL, because there is a discharge prohibition during the summer months, Tapia WRF's discharge will have an insignificant effect on average summer loads and that it is therefore unnecessary to account for

them in the cumulative loading allowed under the TMDL. Furthermore, USEPA stated in the TMDL, on page 41 under "Tapia's Direct Discharge" section, "The State should ensure that these discharges do not result in exceedances of any applicable water quality standards." Therefore, considering the episodic nature of Tapia WRF's discharges between April 15th and November 15th and the discharge's insignificant effect on average summer loads, the summer nitrate+nitrite (as N) effluent limitation was set at 8 mg/L, the same as the winter nitrate+nitrite (as N) effluent limitation . This is also consistent with Order No. 2005-0074, which included a summer nitrate+nitrite (as N) effluent limitation of 8 mg/L for Tapia WRF.

3. Trash TMDL. On May 1, 2008, the Regional Water Board adopted Resolution No. 2008-007, *Amendment to the Basin Plan for the Los Angeles Region to Incorporate a Trash TMDL for Malibu Creek Watershed (Trash TMDL*). The Trash TMDL was approved by the State Water Board, OAL, and USEPA on March 17, 2009, June 16, 2009, and June 29, 2009, respectively, and became effective on July 7, 2009.

b. Los Angeles River TMDL

According to the Los Angeles River TMDL schedule, under the amended consent decree, Heal the Bay, Santa Monica Bay Keeper, et al. v. Browner, et al. (March 23, 1999), the trash, nitrogen, and metals TMDLs for the Los Angeles River were to be completed by March 2001, March 2003, and March 2004, respectively. The coliform TMDL for Los Angeles Harbor is scheduled for completion by March 2006.

1. Nitrogen Compounds TMDL. On July 10, 2003, the Regional Water Board adopted Resolution No. 2003-009, *Amendment to the Basin Plan for the Los Angeles Region to Include a TMDL for Nitrogen Compounds and Related Effects in the Los Angeles River (Nitrogen Compounds TMDL*). On November 19, 2003, the State Board approved the *Nitrogen Compounds TMDL*. However, on December 4, 2003, the Regional Water Board revised the Nitrogen Compound TMDL by adopting Resolution No. 2003-016*, Revision of Interim Effluent Limits for Ammonia in the Amendment to the Water Quality Control Plan for the Los Angeles Region to Include a TMDL for Nitrogen Compounds and Related Effects in the Los Angeles River*. Resolution No. 2003-016 only revised the portion of the Nitrogen Compounds TMDL containing interim limits for total ammonia as nitrogen, for the Glendale and Tillman WRPs. All other portions of the TMDL remained unchanged. The *Nitrogen Compounds TMDL* went into effect on March 23, 2004, when the Regional Water Board filed the Notice of Decision with the California Resources Agency.

2. Trash TMDL. On January 25, 2001, the Regional Water Board adopted Resolution No. 01-006. However, on September 19, 2001, the Regional Water Board reconsidered Resolution No. 01-006 and adopted Resolution No. 2001-013, *Amendment to the Basin Plan for the Los Angeles Region to*

Incorporate a TMDL for Trash in the Los Angeles River (Trash TMDL), which supercedes Resolution No. 01-006. On February 19, 2002, the State Board adopted Resolution No. 02-038, approving the Regional Water Board's Trash TMDL.

The TMDL subsequently was approved by the State Water Quality Control Board on February 19, 2002 and by OAL on July 16, 2002. Since the State Board and OAL failed to approve the TMDL in time to meet the relevant federal consent decree, USEPA promulgated its own Trash TMDL. Upon approval of the Regional Water Board's TMDL by OAL, USEPA approved the Regional Water Board's LA River Trash TMDL on August 1, 2002, and deemed it to have superseded the TMDL promulgated by USEPA.

The City of Los Angeles and the County of Los Angeles both filed petitions and complaints in the Los Angeles Superior Court challenging the LA River Trash TMDL. Subsequent negotiations led to a settlement agreement, which became effective on September 23, 2003. The Court of Appeal rejected the claims litigated by the cities, but found that the Water Board did not adequately complete the environmental checklist. The Court therefore affirmed a writ of mandate issued by the trial court, which orders the Water Board to set aside and not implement the TMDL until it has been brought into compliance with CEQA.

On June 6, the Regional Water Board set aside the TMDL and Resolution No. 01-013 which established it, pursuant to the writ of mandate. On June 28, 2006, a CEQA scoping meeting was conducted. Regional Water Board staff revised the CEQA checklist in response to comments received; prepared a Basin Plan Amendment to incorporate the LA River Trash TMDL; and, have scheduled the item for Board adoption at the October 24, 2006 public hearing, which was cancelled. A new hearing schedule is not available.

3. Metals TMDL. On June 2, 2005, the Regional Water Board adopted Resolution No. R2005-006, *Amendment to the Water Quality Control Plan for the Los Angeles Region to Incorporate a Total Maximum Daily Load for Metals for the Los Angeles River and its Tributaries* (*LA River Metals TMDL*). The LA River Metals TMDL contains Waste Load Allocations (WLA) for copper, lead, cadmium, and zinc. Therefore, numerical water quality based effluent limitations for these constituents have been prescribed in this permit. On October 20, 2005, the State Board approved the *LA River Metals TMDL* by adopting Resolution No. 2005-0077. On December 9, 2005 and December 22, 2005, respectively, OAL and USEPA approved the *LA River Metals TMDL*. It went into effect on January 11, 2006, when the Certificate of Fee Exemption was filed with the California Department of Fish and Game.

On February 16, 2006, the Cities of Bellflower, Carson, Cerritos, Downey, Paramount, Santa Fe Springs, Signal Hill, and Whittier (Cities) filed a petition for a writ of mandate challenging many aspects of the Los Angeles River Metals TMDL and the Ballona Creek Metals TMDL. (*Cities of Bellflower et al v. SWRCB et al*, Los Angeles Superior Court No. BS101732) On May 24, 2007, the Los Angeles County Superior Court adopted the third of three rulings with respect to the writ petition. Collectively, all challenges to the TMDLs were rejected, except for one CEQA claim. The Court ruled that the State Water Board and Regional Water Boards (collectively, the Water Boards) should have adopted and circulated an alternatives analysis that analyzed alternatives to the project. The Court issued its writ of mandate, directing the Water Boards to adopt an alternative analysis that analyzed feasible alternatives to the TMDLs, and to reconsider the TMDLs accordingly.

After considering the alternative analysis, the Regional Water Board found that the TMDL as originally proposed and adopted was appropriate. The Regional Water Board further found that nothing in the alternatives analysis nor any of the evidence generated, presents a basis for the Regional Water Board to conclude that it would have acted differently when it adopted the TMDLs had the alternative analysis been prepared and circulated at that time. Thus, on September 6, 2007, the Regional Water Board adopted Resolution No. R2007-014, which reestablished the metals TMDL for the Los Angeles River in substantially its original form. Resolution No. R2007-014, Amendment to the Water Quality Control Plan for the Los Angeles Region to Incorporate a Total Maximum Daily Load for Metals for the Los Angeles River, supersede Resolution No. R05-006, Amendment to the Water Quality Control Plan for the Los Angeles Region to Incorporate a Total Maximum Daily Load for Metals for the Los Angeles River and its Tributaries (LA River Metals TMDL), adopted by the Regional Board on June 2, 2005. The Metals TMDL was approved by the State Water Board, with the adoption of Resolution No. 2008-0046. On October 14, 2008 and October 29, 2008, respectively, OAL and USEPA approved the LA River Metals TMDL. It went into effect on October 29, 2008.

On May 7, 2009, the Regional Water Board adopted Resolution No. 09-003, which voided and set aside Resolution Nos. R05-006 and R05-007 as required by the writ of mandate in the matter of *Cities of Bellflower et al v. SWRCB*.

The numeric limitations are consistent with the WLAs and provisions of the TMDL. "EPA's interpretation of 40 C.F.R. § 122.44(d)(1)(vii)(B) is that available waste load allocations must be incorporated into corresponding permit effluent limitations, irrespective of reasonable potential." It assigns wasteload allocations (a portion of the loading capacity of the receiving water) to each identified priority pollutant source of waste. Wasteload allocations for select metals in a TMDL were calculated by taking the

median hardness, referenced in the TMDL staff report, and adjusting the CTR chronic or acute criteria according to Section 1.4.1 and Appendix 3 of the SIP. These TMDL wasteload allocations were not expressed with averaging periods in the TMDL.

Therefore, NPDES permit writers must take the extra step of expressing the assigned wasteload allocations as WQBELs by using the calculation procedures in Section 1.4 of the SIP. This is consistent with the LA River Metals TMDL implementation element. Calculating end of pipe effluent limitations will ensure that the in-stream concentrations of each metal meet water quality standards.

IV. RATIONALE FOR EFFLUENT LIMITATIONS AND DISCHARGE SPECIFICATIONS

The CWA requires point source dischargers to control the amount of conventional, non-conventional, and toxic pollutants that are discharged into the waters of the United States. The control of pollutants discharged is established through effluent limitations and other requirements in NPDES permits. There are two principal bases for effluent limitations in the Code of Federal Regulations: Part 122.44(a) requires that permits include applicable technology-based limitations and standards; and Part 122.44(d) requires that permits include water quality-based effluent limitations to attain and maintain applicable numeric and narrative water quality criteria to protect the beneficial uses of the receiving water.

A. Discharge Prohibitions

Effluent and receiving water limitations in this Board Order are based on the Federal Clean Water Act, Basin Plan, State Water Board's plans and policies, U.S. Environmental Protection Agency guidance and regulations, and best practicable waste treatment technology. This Order authorizes the discharge of tertiary-treated wastewater from Discharge Points 001, 002, 003, and 005 only, with the following discharge prohibition for Malibu Creek. It does not authorize any other types of discharges.

1. Discharge Prohibition for Malibu Creek

a. Santa Monica Bay Watershed includes Santa Monica Bay and the surrounding land area that drains naturally into the Bay, including the Malibu Creek Watershed. The Creek flows through a steep-sided canyon to Malibu Lagoon and Surfrider Beach. The Santa Monica Bay Restoration Commission, formerly known as Santa Monica Bay Restoration Project (SMBRP), developed the *Santa Monica Bay Restoration Plan* (BRP) that serves as the blueprint for the restoration and enhancement of the Bay. The Regional Water Board plays a leading role in the implementation of the plan. Two of the proposed priorities of the plan are reduction of pollutants of concern at the source (which includes municipal wastewater treatment plants) and implementation of mass emission caps on some of the pollutants of concern.

b. The Malibu Creek Watershed Advisory Council (Council) became part of the Santa Monica Bay Restoration Project as a BRP implementing committee. As part of overall watershed management, the Council has identified the reduction of freshwater flows to the Lagoon, reduction of nutrients to the Creek and Lagoon, protection of human health in the Creek, Lagoon, and surfzone, and restoration of a fully functioning Lagoon, as high priorities. Previous investigations conducted for the SMBRP showed pathogens were detected in summer runoff at four storm drain or channel locations. Possible sources of pathogen contamination include pet and livestock feces, illicit sewer connections to the storm drains, leaking sewer lines, malfunctioning septic systems, and improper waste disposal by recreational vehicles, campers or transients. Additional potential sources of human pathogens in nearshore waters include sewage overflows into storm drains, small boat waste discharges, and bathers.

c. The *Malibu Creek Watershed Natural Resources Plan* completed in July 1995 by the Natural Resources Conservation Service (NRCS) demonstrated significant increases in flow in Malibu Creek from urban runoff. The U.S. Fish and Wildlife Service listed the Tidewater Goby (*Eucyclogobius newberry*) as an endangered species in February 1994. On August 18, 1997, the National Marine Fisheries Service listed the Southern California Steelhead Trout (*Oncorhynchus mykiss*) as an endangered species. The tidewater goby historically existed in Malibu Lagoon but died out in the 1950's. A tidewater goby population was successfully reintroduced to the Lagoon on April 5, in 1991. Population surveys conducted by the Resource Conservation District of the Santa Monica Mountains and UCLA show that the Goby population has remained stable since their reintroduction. Malibu Creek has the southernmost known sustained run of steelhead trout in North America.

d. Los Angeles County Lifeguards preferred reduced flow to the Lagoon and thus less time with an open sandbar during the dry season because of a standing riptide current that developed around the mouth of the Creek opening, and because they cannot drive emergency vehicles across the Creek mouth area to provide emergency service to the west side of Surfrider Beach.

e. To minimize the contribution of Tapia WRF's discharge to the excess freshwater flow into Malibu Lagoon (which leads to elevated Lagoon level and frequent breaching of the sandbar once, or if, the sandbar has formed), thus impacting both wildlife and human health beneficial uses, this Order continues to enforce the existing discharge prohibition from April 15 to November 15 of each calendar year, the time period of heaviest recreational use and historically-lowest freshwater flows in the watershed

2. **Discharge Prohibition Exemption for Malibu Creek**

a. A provision in this Order prohibits discharges from Tapia WRF to Malibu Creek from April 15 to November 15 of each calendar year from all discharge points, except under certain conditions. These conditions include:

1. Treatment plant upset or other operational emergencies;
2. Storm events as determined by the Executive Officer; or
3. The existence of minimal streamflow conditions that require flow augmentation in Malibu Creek to sustain endangered species as determined by the Executive Officer.

For purposes of the prohibition, the exemptions are defined in the Order.

b. The Discharger submitted a "Rain Impact Analysis" (February 1999) and updated analysis (May 2005) to determine the impact of rain events on Tapia inflows and recycled water demand (i.e., how long it takes for recycled water demand to return to normal). The analysis also includes the spray field recovery time under both short-term rain events during the prohibition, and long-term winter rain events during unusually wet winters (average rainfall exceeding the 90th percentile of rainfall since 1993). These parameters are contingent on the magnitude and timing of rain event(s) and the evapotranspiration. The analysis showed that it takes approximately four days (with 0.43 inches of rain) for recycled water demand to return to pre-rain capacity. Following extremely wet winters, recycled water demand and spray field recovery times depend directly on the volume of rainfall received and plant water demand (evapotranspiration) following the cessation of winter storms. When plant water demand is less than the cumulative rainfall, soils are still saturated on April 15, impacting both recycled water demand and spray field absorption capacity. These impacts end when cumulative plant water demand exceeds cumulative rainfall, and varies from one to several weeks after April 15th depending on the severity of winter rain events.

If LVMWD cannot reuse all of the effluent during rain events, Discharger has the option and is encouraged to discharge to the Los Angeles River.

Based on the foregoing, this Order allows storm events during the prohibition as an exemption to the discharge prohibition when the storm intensity is over 0.4 inch at the Plant rain gauge. Subject to conditions in the Order and those in Attachment SW-1, the Executive Officer may grant approval to discharge when the storm intensity is <0.4 inches at the Plant rain gauge.

C. In the past, The National Marine Fisheries Service (NMFS), U.S. Fish and Wildlife Service, and California Department of Fish and Game have expressed concern over the summer discharge prohibition because it may cause adverse modification of habitat for the Southern California Steelhead Trout and other potential impacts to aquatic life.

LVMWD contracted Entrix, Inc., to undertake a study on the minimum streamflow in Malibu Creek with respect to the steelhead trout habitat. The study entitled "*Minimum Flow Recommendations for Malibu Creek*" (Entrix, Inc., 1999), recommends that a minimum streamflow be maintained in Malibu Creek and

discussed three levels of streamflow – 2.5, 3.5 and 4.5 cfs and the quantity of aquatic habitat associated with each. NMFS evaluated the three alternative flow levels and in a letter to the Regional Water Board dated April 12, 2000, and discussed the advantages and disadvantages of the three levels of streamflow.

While NMFS contended that the lower streamflow alternatives, 2.5 and 3.5 cfs, would likely result in less stream habitat for steelhead trout than the 4.5 cfs alternative, they also pointed out that these lower flow alternatives might be beneficial by producing lower water velocities which would favor the formation of cool water refuge in pools. However, most importantly, each alternative is likely to eliminate late-summer, low-flow days.

During drought years Malibu Creek level was low enough to require flow augmentation for protection of endangered species (steelhead trout). During the term of Order No. R4-2005-074, discharge to augment the Creek flow occurred in 2007, 2008 and 2009. These discharges generally occurred in the late summer, but in the prolonged drought of 2008-2009, discharges were also required in July. These discharges consisted of tertiary treated wastewater conveyed through a fire hydrant and released through the Discharge Point 001. This approach allowed flow rates to be easily adjusted to bring the Creek flows back up to 2.5 cfs at RSW-MC013D (formerly known as R13). Once discharges to augment the Creek flow began, monitoring of the Creek flow at the lower Creek sites and Malibu Lagoon was initiated and continued until water appeared at the Cross Creek Rd Bridge (RSW-MC013D , formerly known as R-4).

This Order therefore allows discharge from Tapia WRF during the prohibition period to maintain a streamflow of 2.5 cfs at the Los Angeles County gagging station F-130-R. This flow is likely to eliminate late-summer, low flow days in the reach from Rindge Dam to Cross Creek Road in Malibu Creek the section of Malibu Creek occupied by steelhead trout, while minimizing flows into Malibu Lagoon. It also requires LVMWD to monitor the Creek flow so that the 2.5 cfs flow can be maintained in this reach through augmentation from Tapia WRF.

B. Technology-Based Effluent Limitations

1. Scope and Authority

Technology-based effluent limits require a minimum level of treatment for industrial/municipal point sources based on currently available treatment technologies while allowing the discharger to use any available control techniques to meet the effluent limits. The 1972 CWA required POTWs to meet performance requirements based on available wastewater treatment technology. Section 301 of the CWA established a required performance level--referred to as "secondary treatment"--that all POTWs were required to meet by July 1, 1977. More specifically, Section 301(b)(1)(B) of the CWA required that USEPA develop secondary treatment standards for POTWs as defined in Section 304(d)(1). Based on this statutory

requirement, EPA developed national secondary treatment regulations which are specified in 40 C.F.R. part 133. These technology- based regulations apply to all POTWs and identify the minimum level of effluent quality to be attained by secondary treatment in terms of five-day biochemical oxygen demand, total suspended solids, and pH.

Section 301(b) of the CWA and implementing USEPA permit regulations at part 122.44, title 40 of the Code of Federal Regulations, require that permits include conditions meeting applicable technology-based requirements at a minimum, and any more stringent effluent limitations necessary to meet applicable water quality standards. The discharge authorized by this Order must meet minimum federal technology-based requirements based on Secondary Treatment Standards at Part 133 and Best Professional Judgment (BPJ) in accordance with Part 125.3.

2. **Applicable Technology-Based Effluent Limitations**

This facility is subject to the technology-based regulations for the minimum level of effluent quality attainable by secondary treatment in terms of $BOD_5 20^oC$, TSS, and pH. However, all technology-based effluent limitations from the previous Order No. R4-2005-0074 are based on tertiary-treated standards. These effluent limitations have been carried over from the previous order to avoid backsliding. Further, mass-based effluent limitations are based on a design flow rate of 16.1 MGD. The removal efficiency for BOD and TSS is set at the minimum level attainable by secondary treatment technology.

The following Table summarizes the technology-based effluent limitations applicable to the Facility:

Summary of Technology-based Effluent Limitations
Discharge Point 001

Table F-4. Summary of Technology-based Effluent Limitations

Parameter	Units	Effluent Limitations				
		Average Monthly	Average Weekly	Maximum Daily	Instantaneous Minimum	Instantaneous Maximum
$BOD_5 20°C$	mg/L	10	--	20	--	--
	lbs/day *	1,343	--	2,686	--	--
Total Suspended solids (TSS)	mg/L	5.0	--	10.0	--	--
	lbs/day *	671	--	1,343	--	--
pH	standard units	--	--	--	6.5	8.5
Removal Efficiency for BOD and TSS	%	85	--	--	--	--

* The mass emission rates are based on the plant design flow rate of 16.1 MGD, and are calculated as follows: Flow(MGD) x Concentration (mg/L) x 8.34 (conversion factor) = lbs/day. During wet-weather storm events in which the flow exceeds the design capacity, the mass discharge rate limitations shall not apply, and concentration limitations will provide the only applicable effluent limitations.

C. Water Quality-Based Effluent Limitations (WQBELs)

1. Scope and Authority

Section 301(b) of the CWA and part 122.44(d) require that permits include limitations more stringent than applicable federal technology-based requirements where necessary to achieve applicable water quality standards. This Order contains requirements, expressed as a technology equivalence requirement, more stringent than secondary treatment requirements that are necessary to meet applicable water quality standards. The rationale for these requirements, which consist of tertiary treatment or equivalent requirements or other provisions, is discussed starting from Section IV.C.2.b.

Part 122.44(d)(1)(i) mandates that permits include effluent limitations for all pollutants that are or may be discharged at levels that have the reasonable potential to cause or contribute to an exceedance of a water quality standard, including numeric and narrative objectives within a standard. Where reasonable potential has been established for a pollutant, but there is no numeric criterion or objective for the pollutant, water quality-based effluent limitations (WQBELs) must be established using: (1) USEPA criteria guidance under CWA section 304(a), supplemented where necessary by other relevant information; (2) an indicator parameter for the pollutant of concern; or (3) a calculated numeric water quality criterion, such as a proposed State criterion or policy interpreting the State's narrative criterion, supplemented with other relevant information, as provided in part 122.44(d)(1)(vi).

The process for determining reasonable potential and calculating WQBELs when necessary is intended to protect the designated uses of the receiving water as specified in the Basin Plan, and achieve applicable water quality objectives and criteria that are contained in other State plans and policies, or any applicable water quality criteria contained in the CTR and NTR.

2. Applicable Beneficial Uses and Water Quality Criteria and Objectives

a. The Basin Plan establishes the beneficial uses for surface water bodies in the Los Angeles region. The beneficial uses of the Malibu Creek and Los Angeles River affected by the discharge have been described previously in this Fact Sheet and in the WDR findings.

b. The Basin Plan also specifies narrative and numeric water quality objectives applicable to surface water as shown in the following discussions.

   i. Table R1 summarizes the applicable water quality criteria/objective for priority pollutants reported in detectable concentrations in the effluent or receiving water. These criteria were used in conducting the Reasonable Potential Analysis for this Order.

ii. Biochemical Oxygen Demand (BOD) and Suspended solids

Biochemical oxygen demand (BOD) is a measure of the quantity of the organic matter in the water and, therefore, the water's potential for becoming depleted in dissolved oxygen. As organic degradation takes place, bacteria and other decomposers use the oxygen in the water for respiration.

Unless there is a steady resupply of oxygen to the system, the water will quickly become depleted of oxygen. Adequate dissolved oxygen levels are required to support aquatic life. Depressions of dissolved oxygen can lead to anaerobic conditions resulting in odors, or, in extreme cases, in fish kills.

40 C.F.R., Part 133 describes the minimum level of effluent quality attainable by secondary treatment, for BOD and suspended solids, as:

a. the monthly average shall not exceed 30 mg/L; and,
b. the 7-day average shall not exceed 45 mg/L.

The Tapia WRF provides tertiary treatment, as such, the limits in the permit are more stringent than secondary treatment requirements. The Plant will achieve solids removal rates that are better than secondary-treated wastewater by adding a coagulant to enhance the precipitation of solids, and by filtering the effluent.

The monthly average, the 7-day average, and the daily maximum limits cannot be removed because none of the anti-backsliding exceptions apply. Those limits were all included in the previous permit and the Tapia WRF has been able to meet all three limits (monthly average, the 7-day average, and the daily maximum), for both BOD and suspended solids.

In addition to having mass-based and concentration-based effluent limitations for BOD and suspended solids, the Tapia WRF also has a percent removal requirement for these two constituents. In accordance with 40 C.F.R. parts 133.102(a)(3) and 133.102(b)(3), the 30-day average percent removal shall not be less than 85 percent. Percent removal is defined as a percentage expression of the removal efficiency across a treatment plant for a given pollutant parameter, as determined from the 30-day average values of the raw wastewater influent pollutant concentrations to the facility and the 30-day average values of the effluent pollutant concentrations for a given time period.

iii. pH

The hydrogen ion activity of water (pH) is measured on a logarithmic scale, ranging from 0 to 14. While the pH of "pure" water at 25°C is 7.0, the pH of natural waters is usually slightly basic due to the solubility of carbon dioxide from the atmosphere. Minor changes from natural conditions can harm aquatic life. The effluent limitation for pH which reads, "the wastes discharged shall at all times be within the range of 6.5 to 8.5," is taken from

the Basin Plan (page 3-15) which reads" the pH of inland surface waters shall not be depressed below 6.5 or raised above 8.5 as a result of waste discharge.

iv. <u>Settleable solids</u>

Excessive deposition of sediments can destroy spawning habitat, blanket benthic (bottom dwelling) organisms, and abrade the gills of larval fish. The limits for settleable solids are based on the Basin Plan (page 3-16) narrative, "Waters shall not contain suspended or settleable material in concentrations that cause nuisance or adversely affect beneficial uses." The numeric limits are empirically based on results obtained from the settleable solids 1-hour test, using an Imhoff cone.

It is impracticable to use a 7-day average limitation, because short-term spikes of settleable solid levels that would be permissible under a 7-day average scheme would not be adequately protective of all beneficial uses. The monthly average and the daily maximum limits cannot be removed because none of the anti-backsliding exceptions apply. The monthly average and daily maximum limits were both included in the previous permit (Order Nos. 95-078 and R2005-0074) and the Tapia WRF has been able to meet both limits.

v. <u>Oil and Grease</u>

Oil and grease are not readily soluble in water and form a film on the water surface. Oily films can coat birds and aquatic organisms, impacting respiration and thermal regulation, and causing death. Oil and grease can also cause nuisance conditions (odors and taste), are aesthetically unpleasant, and can restrict a wide variety of beneficial uses. The limits for oil and grease are based on the Basin Plan (page 3-11) narrative, "Waters shall not contain oils, greases, waxes, or other materials in concentrations that result in a visible film or coating on the surface of the water or on objects in the water, that cause nuisance, or that otherwise adversely affect beneficial uses."

The numeric limits are empirically based on concentrations at which an oily sheen becomes visible in water. It is impracticable to use a 7-day average limitation, because spikes that occur under a 7-day average scheme could cause visible oil sheen. A 7-day average scheme would not be sufficiently protective of beneficial uses. The monthly average and the daily maximum limits cannot be removed because none of the anti-backsliding exceptions apply. Both limits were included in the previous permit and the Tapia WRF has been able to meet both limits.

vi. <u>Residual chlorine</u>

Disinfection of wastewaters with chlorine produces chlorine residual. Chlorine and its reaction products are toxic to aquatic life. The limitation for residual chlorine is based on the Basin Plan (page 3-9) narrative, "Chlorine residual shall not be present in surface water discharges at concentrations that exceed 0.1 mg/L and shall not persist in receiving waters at any concentration that causes impairment of beneficial uses."

It is impracticable to use a 7-day average or a 30-day average limitation, because it is not as protective as of beneficial uses as a daily maximum limitation is. Chlorine is very toxic to aquatic life and short-term exposures of chlorine may cause fish kills.

vii. <u>Total Dissolved Solids, Sulfate, and Boron</u>

The limits for total dissolved solids, sulfate, and boron are based on Basin Plan Table 3-8 (page 3-13), for Malibu Creek Watershed and Los Angeles River Watershed.

viii. <u>Fluoride</u>

The existing permit effluent limitation of 1.6 mg/l for fluoride was developed for the Los Angeles River discharge based on the Basin Plan incorporation of Title 22, *Drinking Water Standards,* by reference, for the protection of GWR. It is practicable to express the limitation as a monthly average, since fluoride is not expected to cause acute effects on beneficial uses.

ix. <u>Methylene Blue Activated Substances (MBAS)</u>

The MBAS procedure tests for the presence of anionic surfactants (detergents) in surface and ground waters. Surfactants disturb the water surface tension, which affects insects and can affect gills in aquatic life. The MBAS can also impart an unpleasant soapy taste to water, as well as cause scum and foaming in waters, which impact the aesthetic quality of both surface and ground waters.

Given the nature of the facility (a POTW) which accepts domestic washwater into the sewer system and treatment plant, and the characteristics of the wastes discharged, the discharge has reasonable potential to exceed both the numeric MBAS water quality objective (WQO) and the narrative WQO for prohibition of floating material such as foams and scums. Therefore an effluent limitation is required.

The discharge from the Tapia WRF may have reasonable potential to contribute to an exceedance of the 0.5 mg/L WQO. The 0.5 mg/L concentration (which has been determined to be protective of beneficial uses and the aesthetic quality of waters) is based on the Department of Public Health's (formerly known as the Department of Health Services) secondary Maximum Contaminant Level (MCL) from Title 22 of the California Code of

Regulations (CCR), and on the Basin Plan WQO (p.3-11) which reads, "Waters shall not have MBAS concentrations greater than 0.5 mg/L in waters designated MUN." While the wastewater from this POTW is not directly discharged into a MUN designated surface water body, eventually it will percolate into unlined reaches of the Los Angeles River [via ground water recharge designated beneficial use (GWR)] to ground water designated for MUN beneficial use. In addition, the Basin Plan states that "Ground water shall not contain taste or odor-producing substances in concentrations that cause nuisance or adversely affect beneficial uses." Therefore, the secondary MCL should be the MBAS limitation for this discharge to protect ground water recharge and the MUN use of the underlying ground water, while also protecting surface waters from exhibiting scum or foaming.

Since the Basin Plan objective is based on a secondary MCL, it is practicable to have a monthly average limitation in the permit, rather than a daily maximum.

x. <u>Total Inorganic Nitrogen</u>

Total inorganic nitrogen is the sum of Nitrate-nitrogen and Nitrite-nitrogen. High nitrate levels in drinking water can cause health problems in humans. Infants are particularly sensitive and can develop methemoglobinemia (blue-baby syndrome). Nitrogen is also considered a nutrient. Excessive amounts of nutrients can lead to other water quality impairments, including eutrophication. The nitrite-N limitation of 1 mg/L is based on the Basin Plan WQO located on Page 3-11.

1. **Algae**. Reaches of the Malibu Creek are 303(d) listed for algae. Excessive growth of algae and/or other aquatic plants can degrade water quality. Algal blooms sometimes occur naturally, but they are often the result of excess <u>nutrients</u> (i.e., nitrogen, phosphorus) from waste discharges or nonpoint sources. These algal blooms can lead to problems with tastes, odors, color, and increased turbidity and can depress the dissolved oxygen content of the water, leading to fish kills. Floating algal scum and algal mats are also an aesthetically unpleasant nuisance.

   The 303(d) listing for algae is being addressed by applying the narrative WQO for biostimulatory substances, "Waters shall not contain biostimulatory substances in concentrations that promote aquatic growth to the extent that such growth causes nuisance or adversely affects beneficial uses," and other relevant information to arrive at a mass based-limitation intended to be protective of the beneficial uses, pursuant to 40 C.F.R. §122.44(d). Total nitrogen will be the indicator parameter intended to control algae, pursuant to 40 C.F.R. § 122.44(d)(1)(vi)(C).

2. **Concentration-based Limitation -** The effluent limitation for nitrate plus nitrite (NO2-N + NO3-N) of 8 mg/L for the Discharge Points 001, 002, and

003 (Malibu Creek) is based on the 2003 USEPA's Malibu Creek Nutrients TMDL Waste Load Allocation assigned to the Tapia WRF. The effluent limitations for nitrate plus nitrite (NO2-N + NO3-N) of 8 mg/L, nitrite of 1 mg/L, and nitrate of 8 mg/L for the Discharge Point 005 (Los Angeles River) are based on the waste load allocations established for the Tapia WRF for these constituents in the Nitrogen Compounds TMDL for the Los Angeles River, Resolution No. 2003-009.

ii. **Mass-based Limitation –** The mass emission rates are based on the plant design flow rate of 16.1 mgd.

xi. **Ammonia Nitrogen**

1. Ammonia is a pollutant routinely found in the wastewater effluent of Publicly Owned Treatment Works (POTWs), in landfill-leachate, as well as in run-off from agricultural fields where commercial fertilizers and animal manure are applied. Ammonia exists in two forms – un-ionized ammonia (NH_3) and the ammonium ion (NH_4^+). They are both toxic, but the neutral, un-ionized ammonia species (NH_3) is much more toxic, because it is able to diffuse across the epithelial membranes of aquatic organisms much more readily than the charged ammonium ion. The form of ammonia is primarily a function of pH, but it is also affected by temperature and other factors. Additional impacts can also occur as the oxidation of ammonia lowers the dissolved oxygen content of the water, further stressing aquatic organisms. Oxidation of ammonia to nitrate may lead to groundwater impacts in areas of recharge. [There is groundwater recharge in the reaches downstream of Discharge Point 005]. Ammonia also combines with chlorine (often both are present in POTW treated effluent discharges) to form chloramines – persistent toxic compounds that extend the effects of ammonia and chlorine downstream.

2. **Los Angeles River Ammonia**. On July 10, 2003, the Regional Water Board adopted Resolution No. 2003-009, *Amendment to the Basin Plan for the Los Angeles Region to Include a TMDL for Nitrogen Compounds and Related Effects in the Los Angeles River (Nitrogen Compounds TMDL*). On November 19, 2003, the State Board approved the *Nitrogen Compounds TMDL*. However, on December 4, 2003, the Regional Water Board revised the Nitrogen Compound TMDL by adopting Resolution No. 2003-016*, Revision of Interim Effluent Limits for Ammonia in the Amendment to the Water Quality Control Plan for the Los Angeles Region to Include a TMDL for Nitrogen Compounds and Related Effects in the Los Angeles River*. Resolution No. 2003-016 only revised the portion of the Nitrogen Compounds TMDL containing interim limits for total ammonia as nitrogen, for the Glendale and Tillman WRPs. All other portions of the TMDL remained unchanged. The *Nitrogen Compounds TMDL* went into effect on March 23, 2004, when the Regional Water Board filed the Notice of Decision with the California Resources Agency. Average monthly and

maximum daily effluent limitations of 2.3 mg/L and 10.1 mg/L, respectively, are assigned to the Tapia WRF, based on the waste load allocations established for the Tapia WRF for these constituents in the Nitrogen Compounds TMDL for the Los Angeles River, Resolution No. 2003-009.

3. **Malibu Creek Ammonia.** The 1994 Basin Plan contained water quality objectives for ammonia to protect aquatic life, in Tables 3-1 through Tables 3-4. However, those ammonia objectives were revised on April 25, 2002, by the Regional Water Board, with the adoption of Resolution No. 2002-011, *Amendment to the Water Quality Control Plan for the Los Angeles Region to Update the Ammonia Objectives for Inland Surface Waters (including enclosed bays, estuaries and wetlands) with Beneficial Use designations for protection of Aquatic Life*. Resolution No. 2002-011 was approved by the State Water Board, OAL, and USEPA on April 30, 2003, June 5, 2003, and June 19, 2003, respectively, and is now in effect.

   On December 1, 2005, the Regional Water Board adopted Resolution No. 2005-014, An Amendment to the *Water Quality Control Plan for the Los Angeles Region* to Revise Early Life Stage Implementation Provision of the Freshwater Ammonia Objectives for Inland Surface Waters (including enclosed bays, estuaries and wetlands) for Protection of Aquatic Life. This amendment contains ammonia objectives to protect Early Life Stages (ELS) of fish in inland surface water supporting aquatic life. This resolution was approved by the USEPA on April 5, 2007. This amendment revised the implementation provision included as part of the freshwater ammonia objectives relative to the protection of ELS of fish in inland surface waters.

   The procedures for calculating the ammonia nitrogen effluent limitation based on Basin Plan amendment is discussed below:

   (1) One-Hour Average Objective

   The USEPA approval letter dated June 19, 2003, of the 2002 Ammonia Basin Plan Amendment, stated that the acute criteria are dependent on pH and whether sensitive coldwater fish are present. The Facility's immediate receiving waterbody has "COLD" and "MIGR" beneficial use designation. Therefore, the one-hour average objective is dependent on pH and fish species (salmonids present or absent) but not on temperature.

   For waters designated COLD or MIGR, the one-hour average concentration of total ammonia as nitrogen (in mg N/L) shall not exceed the values in Table 3-1 (amended on April 25, 2002) of the Basin Plan or as described in the equation below:

$$\text{One-hour Average Concentration} = \frac{0.275}{1+10^{7.204-\text{pH}}} + \frac{39}{1+10^{\text{pH}-7.204}}$$

The 90th percentile of effluent pH is 8.1. Use of the 90th percentile pH to set effluent limitations is appropriate because of the shorter time scale of the one-hour average. It is conservative, because it is overprotective 90% of the time. Additionally, there is little variability in the effluent pH data. Using the pH value of 7.5 in the formula above, the resulting One-hour Average Objective is equal to 13.3 mg/L.

(2) 30-Day Average Objective

Early life stage of fish is presumptively present and must be protected at all times of the year unless the water body is listed in Table 3-X of the Basin Plan (in Resolution No. 2005-014) or unless a site-specific study is conducted, which justifies applying the ELS absent condition or a seasonal ELS present condition. Ojai Valley WWTP discharges into the Ventura River, which is not listed in Table 3-X. Therefore, this waterbody will be designated "ELS Present" condition. For freshwaters subject to the "Early Life Stage Present" condition, the thirty-day average concentration of total ammonia as nitrogen (in mg N/L) shall not exceed the values in Table 3-2 of the Basin Plan or as described in the equation below:

$$\text{30-day Average Concentration} = \left(\frac{0.0577}{1+10^{7.688-\text{pH}}} + \frac{2.487}{1+10^{\text{pH}-7.688}}\right) * MIN\left(2.85, 1.45 * 10^{0.028*(25-T)}\right)$$

Where T = temperature expressed in ºC.

The 30-day average objective[1] is dependent on pH, temperature, and the presence or absence of early life stages of fish. The 50th percentile of effluent pH and temperature is 7.2 pH and 22°C, respectively. Use of the 50th percentile pH and temperature is appropriate to set the 30-day average objective, because the 30-day average represents more long-term conditions. Additionally, there is little variability in the effluent pH data, and the 30-day objective is primarily dependent upon

[1] This is the current Basin Plan definition of the 30-day average objective, according to the Ammonia Basin Plan Amendment, Resolution No. 2002-011, *Amendment to the Water Quality Control Plan for the Los Angeles Region to Update the Ammonia Objectives for Inland Surface Waters (including enclosed bays, estuaries and wetlands) with Beneficial Use designations for protection of "Aquatic Life*," adopted by the Los Angeles Regional Water Quality Control Board on April 25, 2002. It was amended by Resolution No. 2005-014, adopted by the Regional Board on December 1, 2005 and was approved by the USEPA on April 5, 2007. This new Resolution implements ELS Provision as described under "implementation", subparagraph 3. In this Resolution, the Discharger's receiving waterbody is designated as ELS present.

pH. Using the Discharger's monitoring data in the formula above, the resulting 30-Day Average Objective is equal to 3.3 mg/L.

(3) Translation of Ammonia Nitrogen Objectives into Effluent Limitations

In order to translate the water quality objectives for ammonia as described in the preceding discussions into effluent limitations, the Implementation Provisions of the 2002 Basin Plan Amendment, Section 5 – Translation of Objectives into Effluent Limits, was followed and was discussed below. This method is similar to the method contained in "Policy for Implementation of Toxics Standard for Inland Surface Waters, Enclosed Bays, and Estuaries of California (2000). The method is also consistent with that outlined in the US EPA "Technical Support Document for Water Quality-based Toxics Control (1991).

Step 1 – Identify applicable water quality criteria.

Effluent pH and temperature are used to calculate effluent ammonia limits. This is appropriate when using the translation procedure, because the translation procedure uses variability in ammonia effluent concentrations to set the limits from the objectives. Additionally, conditions in the effluent may be significantly different than conditions in the receiving water. Use of effluent data to set effluent ammonia limits will ensure that ammonia water quality objectives are met in the effluent at all times, even in the case where effluent conditions are less favorable than receiving water conditions. Additional receiving water monitoring and compliance determinations will be required in addition to the effluent limits, to ensure that ammonia water quality objectives are met in the receiving water at all times.

From the Discharger's effluent, the following data are summarized below:

pH = 7.5 at 90th percentile
pH = 7.2 at 50th percentile
Temperature = 22°C at 50th percentile

The receiving water is classified as Waters Designated COLD and MIGR.

From Table 3-1 of the Basin Plan, when pH is equal to 7.5;

One-hour Average Objective = 13.28 mg/L

From Table 3-2 of the Basin Plan, when pH = 7.2 and temperature = 22°C;

30-day Average Objective = 3.33 mg/L

From Basin Plan amendment;

4-day Average Objective = 2.5 times the 30-day average objective.
4-day Average Objective = 2.5 X 3.33 = 8.32 mg/L

Ammonia Water Quality Objectives (WQO) Summary:

One-hour Average = 13.28 mg/L
Four-day Average = 8.32 mg/L
30-day Average = 3.33 mg/L

Step 2 – For each water quality objective, calculate the effluent concentration allowance (ECA) using the steady-state mass balance model. Since mixing has not been allowed by the Regional Water Board, this equation applies:

ECA = WQO

Step 3 – Determine the Long-Term Average discharge condition (LTA) by multiplying each ECA with a factor (multiplier) that adjust for variability. By using Table 3-6, calculated CV (i.e., standard deviation/mean for ammonia), the following are the Effluent Concentration Allowance.

ECA multiplier when CV = 0.6

One-hour Average = 0.321
Four-day Average = 0.527
30-day Average = 0.784

Using the LTA equations:

$LTA_{1\text{-hour/99}} = ECA_{1\text{-hour}} \times ECA\ multiplier_{1\text{-hour99}} = 13.28 \times 0.321 = 4.26$ mg/L

$LTA_{4\text{-day/99}} = ECA_{4\text{-day}} \times ECA\ multiplier_{4\text{-day99}} = 8.22 \times 0.527 = 4.38$ mg/L

$LTA_{30\text{-day/99}} = ECA_{30\text{-day}} \times ECA\ multiplier_{30\text{-day99}} = 3.22 \times 0.784 = 2.60$ mg/L

Step 4 – Select the (most limiting) of the LTAs derived in Step 3 (LTA_{min})

$LTA_{min} = 2.60$ mg/L

Step 5 – Calculate water based effluent limitation MDEL and AMEL by multiplying LTA_{min} as selected in Step 4, with a factor (multiplier) found in Table 3-7.

Monthly sampling frequency (n) is once per month or less, and the minimum LTA is the $LTA_{1\text{-day}/99}$, therefore n = 30, CV = 0.6.

MDEL multiplier = 3.11
AMEL multiplier = 1.19

$MDEL = LTA_{min} \times MDEL\ multiplier_{99} = 2.60 \times 3.11 = 8.1$ mg/L

$AMEL = LTA_{min} \times AMEL\ multiplier_{95} = 2.60 \times 1.19 = 3.1$ mg/L

Table 5. Translated Ammonia Effluent Limitations

Constituent	**MDEL** (mg/L)	**AMEL** (mg/L)
Ammonia Nitrogen	8.1	3.1

xii. Phosphorus

Excess phosphorous is a cause for algal bloom and eutrophication, as well as decrease in dissolved oxygen. The nexus to water quality is that both receiving water bodies are impaired for nutrients. Therefore, the permit includes a limitation for phosphorus based upon the existing permit limitation, based upon antidegradation, and as translation of the Basin Plan narrative "Biostimulatory substances include excess nutrients (nitrogen, phosphorus) and other compounds that stimulate aquatic growth. In addition to being aesthetically unpleasant (causing taste, odor, or color problems), this excessive growth can also cause other water quality problems. Waters shall not contain biostimulatory substances in concentrations that promote aquatic growth to the extent that such growth causes nuisance or adversely affects beneficial uses". This limitation reflects performance data of the plant, and as such no additional treatment is needed to comply with the limitation. Thus, there is no "economic consideration" needed.

xiii. Coliform Bacteria

According to Attachment A to Resolution No. 2004-019R, discharges from Tapia WWRF along with effluent irrigation, and general construction storm water permits are not expected to be a significant source of bacteria. Therefore, the waste load allocations (WLAs) for these discharges are zero (0) days of allowable exceedances for all three time periods and for the single sample limits and the rolling 30-day geometric mean. The three time periods include: 1) summer dry-weather (April 1 to October 31); 2)

winter dry-weather (November 1 to March 31); and 3) wet-weather (defined as days of 0.1 inch of rain or more plus three days following rain event).

Total and fecal coliform bacteria are used to indicate the likelihood of pathogenic bacteria in surface waters. Given the nature of the facility, a wastewater treatment plant, pathogens are likely to be present in the effluent in cases where the disinfection process is not operating adequately. As such, the permit contains the following:

i. Effluent Limitations:

- The 7 day median number of total coliform organisms at some point in the treatment process shall not exceed a Most Probable Number (MPN) or Colony Forming Unit (CFU) of 2.2 per 100 milliliters, and

- The number of total coliform organisms shall not exceed an MPN or CFU of 23 per 100 milliliters in more than one sample within any 30-day period.

- The number of total coliform bacteria shall not exceed an MPN or CFU of 240 per 100 milliliters in any sample.

These disinfection-based effluent limitations for coliform are for human health protection and are consistent with requirements for disinfected tertiary recycled water under the Title 22 of the California Code of Regulations, as established by the Department of Public Health (formerly known as the Department of Health Services). These limits for coliform must be met at the point of the treatment train immediately following disinfection, as a measure of the effectiveness of the disinfection process.

ii. Receiving Water Limitation

- Geometric Mean Limits
  - *E. Coli* density shall not exceed 126/100 mL.
  - Fecal coliform density shall not exceed 200/100 mL.

- Single Sample Limits
  - *E. Coli* density shall not exceed 235/100 mL.
  - Fecal coliform density shall not exceed 400/100 mL.

These receiving water limitations are based on Resolution No. 01-018, Amendment to the Water Quality Control Plan for the Los Angeles Region to Update the Bacteria Objectives for Water Bodies Designated for Water Contact Recreation, adopted by the Regional Water Board on October 25,

2001. The Resolution was approved by State Water Board, OAL, and USEPA, on July 18, 2002, September 19, 2002, and September 25, 2002, respectively.

xiv. <u>Temperature</u>

USEPA document, *Quality Criteria for Water 1986* [EPA 440/5-86-001, May 1, 1986], also referred to as the *Gold Book*, discusses temperature and its effects on beneficial uses, such as recreation and aquatic life.

- The Federal Water Pollution Control Administration in 1967 called temperature "a catalyst, a depressant, an activator, a restrictor, a stimulator, a controller, a killer, and one of the most important water quality characteristics to life in water." The suitability of water for total body immersion is greatly affected by temperature. Depending on the amount of activity by the swimmer, comfortable temperatures range from 20°C to 30°C (68 °F to 86 °F).

- Temperature also affects the self-purification phenomenon in water bodies and therefore the aesthetic and sanitary qualities that exist. Increased temperatures accelerate the biodegradation of organic material both in the overlying water and in bottom deposits which makes increased demands on the dissolved oxygen resources of a given system. The typical situation is exacerbated by the fact that oxygen becomes less soluble as water temperature increases. Thus, greater demands are exerted on an increasingly scarce resource which may lead to total oxygen depletion and obnoxious septic conditions. Increased temperature may increase the odor of water because of the increased volatility of odor-causing compounds. Odor problems associated with plankton may also be aggravated.

- Temperature changes in water bodies can alter the existing aquatic community. Coutant (1972) has reviewed the effects of temperature on aquatic life reproduction and development. Reproductive elements are noted as perhaps the most thermally restricted of all life phases, assuming other factors are at or near optimum levels. Natural short-term temperature fluctuations appear to cause reduced reproduction of fish and invertebrates.

The Basin Plan lists temperature requirements for the receiving waters. Based on the requirements of the Basin Plan and a white paper developed by Regional Water Board staff entitled *Temperature and Dissolved Oxygen Impacts on Biota in Tidal Estuaries and Enclosed Bays in the Los Angeles Region*, a maximum effluent temperature limitation of 86 °F is included in the Order. The white paper evaluated the optimum temperatures for steelhead, topsmelt, ghost shrimp, brown rock crab, jackknife clam, and blue mussel. The new temperature effluent limitation is reflective of new information

available that indicates that the 100°F temperature which was formerly used in permits was not protective of aquatic organisms. A survey was completed for several kinds of fish and the 86°F temperature was found to be protective. It is impracticable to use a 7-day average or a 30-day average limitation for temperature, because it is not as protective as of beneficial uses as a daily maximum limitation is. A daily maximum limitation is necessary to protect aquatic life and is consistent with the fishable/swimmable goals of the CWA.

xv. <u>Turbidity</u>

Turbidity is an expression of the optical property that causes light to be scattered in water due to particulate matter such as clay, silt, organic matter, and microscopic organisms. Turbidity can result in a variety of water quality impairments. The effluent limitation for turbidity which reads, "For the protection of the water contact recreation beneficial use, the wastes discharged to water courses shall have received adequate treatment, so that the turbidity of the wastewater does not exceed: (a) a daily average of 5 Nephelometric turbidity units (NTUs) more than 5 percent of the time (72 minutes) during any 24 hour period; and (b) 2 NTUs at any time," is based on the Basin Plan's incorporation by reference of Title 22 and the definition of filtered wastewater. In comparison to other POTWs in this region, the turbidity limitation for the Tapia WRF is consistent with those of POTWs which have filtration as part of their treatment process. The limitation, therefore reflects what the technology (of choice by the Discharger) is designed to achieve.

xvi. <u>Radioactivity</u>

Radioactive substances are generally present in natural waters in extremely low concentrations. Mining or industrial activities increase the amount of radioactive substances in waters to levels that are harmful to aquatic life, wildlife, or humans. Section 301(f) of the CWA contains the following statement with respect to effluent limitations for radioactive substances: "Notwithstanding any other provisions of this Act it shall be unlawful to discharge any radiological, chemical, or biological warfare agent, any high-level radioactive waste, or any medical waste, into the navigable waters." Chapter 5.5 of the California Water Code contains a similar prohibition under section 13375, which reads as follows: "The discharge of any radiological, chemical, or biological warfare agent into the waters of the State is hereby prohibited." However, rather than give a hard and fast absolute prohibition on radioactive substances, Regional Water Board staff have set the following effluent limitation for radioactivity: "Radioactivity of the wastes discharged shall not exceed the limits specified in Title 22, Chapter 15, Article 5, Section 64443, of the California Code of Regulations, or subsequent revisions." The limitation is based on the Basin Plan incorporation of Title 22, *Drinking Water Standards,* by reference, to protect beneficial uses. Therefore, the accompanying Order will retain the limitation for radioactivity.

xvii. Arsenic, Perchlorate, Bis(2-ethylhexyl)phthalate, and Total trihalomethanes

The previous Order did not contain effluent limitations for arsenic, perchlorate, and total trihalomethanes. Based on the monitoring data for Tapia WRF, from November 2005- January 2010, it was determined that the discharge to Los Angeles River (based on its groundwater recharge beneficial use) had a reasonable potential (RP) to contribute to an exceedance of the WQO for these constituents as well as bis(2-ethylhexyl)phthalate. The effluent limitations for arsenic, perchlorate, total trihalomethanes, and the average monthly effluent limitation for bis(2-ethylhexyl)phthalate (for Discharge Point 005 only) are based on the Basin Plan WQOs incorporation of Title 22 maximum contaminant levels (MCLs) by reference on page 3-18 for the protection of the MUN beneficial use of groundwater. The MCLs for arsenic (10 µg/L), perchlorate (6 µg/L), bis(2-ethylhexyl)phthalate (4 µg/L) and total trihalomethanes (80 µg/L) are listed in Table 64431-A of Section 64431 of Title 22 of the CCR.

Total trihalomethanes is the sum of four individual trihalomethane compounds: bromodichloromethane, bromoform, chloroform, and dibromochloromethane. Although many of the Basin Plan's WQOs for the protection of the MUN beneficial use are based on the incorporation of Title 22 MCLs by reference, the MCLs for disinfection byproducts (Table 64533-A of Section 64533 of Title 22) were not referenced on pages 3-8 or 3-18 of the Basin Plan. Despite that omission, Regional Board staff believe that it is relevant to use the MCL for total trihalomethanes to protect human health. Total trihalomethanes are produced at the Tapia WRF as by-products of the disinfection process. Dichlorobromomethane triggered a RP to exceed the criteria, and the sum of the individual trihalomethanes concentrations also demonstrated a RP to contribute to an exceedance of the 80 µg/L MCL. Regional Water Board staff used best professional judgment, the Title 22 MCL, and the Federal USEPA MCL for total trihalomethanes, to translate the following Basin Plan narrative WQOs into a numeric limitation:

> "Surface waters shall not contain concentrations of chemical constituents in amounts that adversely affect any designated beneficial use," and
> "Ground waters shall not contain concentrations of chemical constituents in amounts that adversely affect any designated beneficial use."

xviii. Cadmium, Copper, Lead, Selenium, and Zinc

The Tapia WRF did not have RP for cadmium, copper, lead, selenium, and zinc. However, because the Los Angeles River Metals TMDL contains both dry weather and wet weather wasteload allocations for both nonpoint and point sources, this Order contains effluent limitations for these constituents. The effluent limitations were developed using effluent-specific coefficients of

variation (CVs) and the applicable **wet and dry weather** wasteload allocations (WLAs) contained in Resolution No. R2007-014, Amendment to the Water Quality Control Plan for the Los Angeles Region to Incorporate a Total Maximum Daily Load for Metals for the Los Angeles River, adopted by the Regional Board on September 6, 2007. The effluent limitations were developed in a manner consistent with the procedures in Section 1.4 of the State Water Resources Control Board Policy for Implementation of Toxics Standards for Inland Surface Waters, Enclosed Bays, and Estuaries of California (2000) (hereinafter, SIP). This is consistent with the implementation provision in the Attachment A to Resolution No. R2007-014. Resolution No. R2007-0014. See Table R-3 for derivation of effluent limitations for cadmium, copper, lead, selenium, and zinc.

The California Toxic Rule (CTR) and State Implementation Policy (SIP) specify numeric objectives for toxic substances and the procedures whereby these objectives are to be implemented. The procedures include those used to conduct reasonable potential analysis to determine the need for effluent limitations for priority pollutants. The Technical Support Document (TSD) specifies the procedures to conduct reasonable potential analyses for non-priority pollutants.

3. **Determining the Need for WQBELs**

The Regional Water Board developed WQBELs for ammonia-nitrogen, nitrite-nitrogen, nitrate-nitrogen, nitrate plus nitrite as nitrogen, and chloride based upon Total Maximum Daily Loads (TMDLs). The effluent limitations for these pollutants were established regardless of whether or not there is reasonable potential for the pollutants to be present in the discharge at levels that would cause or contribute to a violation of water quality standards. The Regional Water Board developed water quality-based effluent limitations for these pollutants pursuant to part 122.44(d)(1)(vii), which does not require or contemplate a reasonable potential analysis. The Regional Water Board has determined that the WQBEL is consistent with the assumptions of the TMDL. Similarly, compliance with the effluent limitation will satisfy the requirements of the TMDL. Similarly, the SIP at Section 1.3 recognizes that reasonable potential analysis is not appropriate if a TMDL has been developed.

In accordance with Section 1.3 of the SIP, the Regional Water Board conducted a reasonable potential analysis for each priority pollutant with an applicable criterion or objective to determine if a WQBEL is required in the permit. The Regional Water Board analyzed effluent data to determine if a pollutant in a discharge has a reasonable potential to cause or contribute to an excursion above a State water quality standard. Regional Water Board staff mainly focused on the effluent data set generated since the effective date of the existing NPDES Order, and on the receiving water data from November 2005 to January 2010. For all parameters that demonstrate reasonable potential, numeric WQBELs are required. The RPA considers water quality criteria from the CTR and NTR, and when applicable, water quality objectives specified in the Basin Plan. In conducting the RPA, the Regional

Water Board staff identified the maximum effluent concentration (MEC) and maximum background concentration in the receiving water for each constituent, based on data provided by the Discharger.

Section 1.3 of the SIP provides the procedures for determining reasonable potential to exceed applicable water quality criteria and objectives. The SIP specifies three triggers to complete a RPA:

Trigger 1 – If the MEC is greater than or equal to the CTR water quality criteria or applicable objective (C), a limitation is needed.

Trigger 2 – If background water quality (B) > C and the pollutant is detected in the effluent, a limitation is needed.

Trigger 3 – If other related information such as CWA 303(d) listing for a pollutant, discharge type, compliance history, then best professional judgment is used to determine that a limitation is needed.

Sufficient effluent and ambient data are needed to conduct a complete RPA. If data are not sufficient, the Discharger will be required to gather the appropriate data for the Regional Water Board to conduct the RPA. Upon review of the data, and if the Regional Water Board determines that WQBELs are needed to protect the beneficial uses, the permit will be reopened for appropriate modification.

The RPA was performed for the priority pollutants regulated in the CTR for which data are available. Based on the SIP RPA, there was reasonable potential for the Discharge to contribute to an exceedance of the CTR criteria for mercury, dichlorobromomethane, bis(2-ethylhexyl)phthalate, aldrin, and alpha-BHC. Based on the TSD RPA, there was reasonable potential for the discharge to the Los Angeles River to contribute to an exceedance of the federal MCL for arsenic and total trihalomethanes, and perchlorate, and of the California MCL for bis(2-ethylhexyl)phthalate.

4. **WQBEL Calculations**

a. **Calculation Options**. Once RPA has been conducted using either the TSD or the SIP methodologies, WQBELs are calculated. Alternative procedures for calculating WQBELs include:

- Use WLA from applicable TMDL
- Use a steady-state model to derive Maximum Daily Effluent Limits and Average Monthly Effluent Limits.
- Where sufficient data exist, use a dynamic model which has been approved by the State Water Board.

b. **SIP Calculation Procedure**. Section 1.4 of the SIP requires the step-by-step procedure to “adjust” or convert CTR numeric criteria into Average Monthly

Effluent Limitations (AMELs) and Maximum Daily Effluent Limitations (MDELs), for toxics. A table providing the calculation for all applicable WQBELs for this Order is provided in Table R1 of this Order.

Step 3 of Section 1.4 of the SIP (page 8) lists the statistical equations that adjust CTR criteria for effluent variability.

Step 5 of Section 1.4 of the SIP (page 10) lists the statistical equations that adjust CTR criteria for averaging periods and exceedance frequencies of the criteria/objectives. This section also reads, "For this method only, maximum daily effluent limitations shall be used for publicly-owned treatment works (POTWs) in place of average weekly limitations.

A sample calculation for lead:

Step 1: Identify applicable water quality criteria.

From California Toxics Rule (CTR), we can obtain the Criterion Maximum Concentration (CMC) and the Criterion Continuous Concentration (CCC).

Freshwater Aquatic Life Criteria:
CMC = 358.91 µg/L
CCC = 13.99 µg/L and
Human Health Criteria for Organisms only is narrative (CTR page 31712, column D2).

Step 2: Calculate effluent concentration allowance (ECA)

ECA = Criteria in CTR, since no dilution is allowed.

Step 3: Determine long-term average (LTA) discharge condition

i. Calculate CV:

CV = Standard Deviation/Mean
= 3.2

ii. ECA multiplier when CV = 3.2:

Acute = 0.09
Chronic = 0.137

iii. Using the LTA equations, determine LTA:

$LTA_{acute/99} = ECA_{acute} \times ECA\ multiplier_{acute/99} = 358.91 \times 0.09 = 32.30$ µg/L

$LTA_{chronic/99}$ = $ECA_{chronic}$ x ECA $multiplier_{chronic/99}$ = 13.991 x 0.137 = 1.92 µg/L

Step 4: Select the lowest LTA in Step 3.

LTA_{min} = 1.92 µg/L

Step 5: Calculate the Average Monthly Effluent Limitation (AMEL) & Maximum Daily Effluent Limitation (MDEL) for AQUATIC LIFE, by multiplying LTA_{min} as selected in Step 4, with a factor (multiplier) found in Table 2 of SIP.

Monthly sampling frequency (n) is four per month or less, and the minimum LTA is the $LTA_{chronic/99}$, therefore, n = 4, CV = 3.2.

MDEL multiplier = 11.1
AME: multiplier = 3.38

MDEL = LTA_{min} x MDEL $multiplier_{99}$ = 1.92 x 11.1 = 21.27 µg/L

AMEL = LTA_{min} x AMEL $multiplier_{95}$ = 1.92 x 3.38 = 6.48 µg/L

Step 6: Find the Average Monthly Effluent Limitation (AMEL) & Maximum Daily Effluent Limitation (MDEL) for HUMAN HEALTH

N/A, no numeric human health criteria.

Step 7: Compare the AMELs for Aquatic life and Human health and select the lowest. Compare the MDELs for Aquatic life and Human health and select the lowest

i. Lowest AMEL = 6.48 µg/L (Based on aquatic life protection)

ii. Lowest MDEL = 21.27 µg/L (Based on aquatic life protection)

c. **Mass based limits**. 40 C.F.R. part 122.45(f)(1) requires that except under certain conditions, all permit limits, standards, or prohibitions be expressed in terms of mass units. 40 C.F.R. part 122.45(f)(2) allows the permit writer, at the writer's discretion, to express limits in additional units (e.g., concentration units). The regulations mandate that, where limits are expressed in more than one unit, the permittee must comply with both.

Generally, mass-based limits ensure that proper treatment, and not dilution, is employed to comply with the final effluent concentration limits. Concentration-based effluent limits, on the other hand, discourage the reduction in treatment efficiency during low-flow periods and require proper operation of the treatment

units at all times. In the absence of concentration-based effluent limits, a permittee would be able to increase its effluent concentration (i.e., reduce its level of treatment) during low-flow periods and still meet its mass-based limits. To account for this, this permit includes mass and concentration limits for some constituents.

Summary of Water Quality-based Effluent Limitations*
Discharge Points 001, 002, 003 and 005

Table F-5. Summary of Water Quality-based Effluent Limitations

Effluent Limitations Applicable to Discharge Points 001, 002, 003, and 005						
Parameter	**Units**	**Effluent Limitations**				
		Average Monthly	**Average Weekly**	**Max. Daily**	**Instanta-neous Minimum**	**Instanta-neous Max.**
Mercury	µg/L	0.051 5.1E-2	--	0.10	--	--
	lbs/day[10]	0.0068 6.8E-3	--	0.013 1.3E-2	--	--
Cyanide	µg/L	4.2	--	8.5	--	--
	lbs/day[10]	0.56	--	1.1	--	--
Aldrin	µg/L	0.00014 1.4E-4	--	0.0003 3.0E-4	--	--
	lbs/day[10]	1.9xE-5	--	4.0xE-5	--	--
Alpha-BHC	µg/L	0.013 1.3E-2	--	0.026 2.6E-2	--	--
	lbs/day[10]	0.0017 1.7E-3	--	0.0035 3.5E-3	--	--
Dichlorobromomethane	µg/L	46	--	77	--	--
	lbs/day[10]	6.2	--	10	--	--
4,4'-DDE	µg/L	5.9E-4	--	1.2E-3	--	--
	lbs/day[10]	7.9E-5	--	1.6E-4	--	--
4,4'-DDD	µg/L	8.4E-4	--	1.7E-3	--	--
	lbs/day[10]	1.1E-4	--	2.3E-4	--	--
Dieldrin	µg/L	1.4E-4	--	3.0E-4	--	--
	lbs/day[10]	1.8E-5	--	4.0E-5	--	--
Endrin	µg/L	4.3E-2	--	8.6E-2	--	--
	lbs/day[10]	5.8E-3	--	1.2E-2	--	--
Heptachlor	µg/L	2.1E-4	--	4.0E-4	--	--
	lbs/day[10]	2.8E-5	--	5.4E-5	--	--

Effluent Limitations Applicable to Discharge Points 001, 002, and 003 ONLY						
Parameter	**Units**	**Effluent Limitations**				
		Average Monthly	**Average Weekly**	**Max. Daily**	**Instanta-neous Minimum**	**Instanta-neous Max.**
Bis(2-Ethylhexyl)Phthalate	µg/L	5.9	--	15	--	--
	lbs/day[10]	0.79	--	2.0		
Total Ammonia	mg/L	3.1	--	8.1	--	--

	lbs/day[10]	4.2xE2	--	1.2xE3		
Nitrate + Nitrite as Nitrogen	mg/L	8	--	--	--	--
	lbs/day[10]	1.1xE3	--			
Total Phosphorus (Summer- April 15th- November 15th)	mg/L	3				
	lbs/day[10]	4.0E2				
Total Phosphorus (Winter- November 15th - April 14th)	mg/L	3		4		
	lbs/day[10]	4.0E2		5.4E2		

Effluent Limitations Applicable to Discharge Point 005 ONLY

Parameter	Units	Effluent Limitations				
		Average Monthly	Average Weekly	Max. Daily	Instanta-neous Minimum	Instanta-neous Max.
Bis(2-Ethylhexyl)Phthalate	µg/L	4	--	15	--	--
	lbs/day[10]	0.54	--	2.0		
Total Ammonia as N	mg/L	2.3	--	10.1	--	--
	lbs/day[10]	3.1E2		1.36E3		
Nitrate + Nitrite as Nitrogen	mg/L	8 [6]		--	--	--
	lbs/day[10]	1.1 xE3				
Nitrite as Nitrogen	mg/L	1 [6]	--	--	--	--
	lbs/day[10]	1.3 xE2				
Nitrate as Nitrogen	mg/L	8 [6]	--	--	--	--
	lbs/day[10]	1.1 xE3				
Total phosphorus	mg/L	3				
	lbs/day[10]	4.0E2				
Arsenic	µg/L	10	--	--	--	--
	lbs/day[10]	1.3	--	--	--	--
Perchlorate	µg/L	6	--	--	--	--
	lbs/day[10]	0.81	--	--	--	--
Total trihalomethanes	µg/L	80	--	--	--	--
	lbs/day[10]	11	--	--	--	--
Cadmium (wet weather)	µg/L	1.1	--	3.1	--	--
	lbs/day[10]	0.1	--	0.4	--	--
Copper (wet weather) [7]	µg/L	11	--	17	--	--
	lbs/day[10]	1.5	--	2.3	--	--

Lead (wet weather)	µg/L	23	--	62	--	--
	lbs/day[10]	3.1	--	8.3	--	--
Zinc (wet weather)	µg/L	120	--	160	--	--
	lbs/day[10]	16	--	21	--	--
Copper (dry weather)	µg/L	27	--	41	--	--
	lbs/day[10]	3.6	--	5.5	--	--
Lead (dry weather)	µg/L	13	--	35	--	--
	lbs/day[10]	1.7	--	4.7	--	--
Selenium (dry weather)	µg/L	4.1	--	8.2	--	--
	lbs/day[10]	0.55	--	1.1	--	--

5. **Whole Effluent Toxicity (WET)**

The permit contains effluent limitations for toxicity based on the Basin Plan. Because of the nature of industrial discharges into the POTW sewershed, it is possible that other toxic constituents could be present in Tapia WRF effluent, or could have synergistic or additive effects. Also, because numeric limits for certain toxic constituents that did not show RP have been removed, the acute toxicity limitation may provide a backstop to preventing the discharge of toxic pollutants in toxic amounts.

Of the 83 chronic toxicity tests conducted from January 2006 to December 2009, 4 singles tests exceeded 1 TU_C. Acute toxicity testing results from the same period did not exceed any acute toxicity requirements. Regional Water Board staff determined that, pursuant to the SIP, reasonable potential exists for toxicity. As such, the permit contains effluent limitations for toxicity.

The toxicity numeric effluent limitations are based on:

a. 40 C.F.R. part 122.44(d)(v) – limits on whole effluent toxicity are necessary when chemical-specific limits are not sufficient to attain and maintain applicable numeric or narrative water quality standards;

b. 40 C.F.R. part 122.44(d)(vi)(A) – where a State has not developed a water quality criterion for a specific pollutant that is present in the effluent and has reasonable potential, the permitting authority can establish effluent limits using numeric water quality criterion;

c. Basin Plan objectives and implementation provisions for toxicity;

d. USEPA Regions IX & X Guidance for Implementing Whole Effluent Toxicity Programs Final May 31, 1996;

e. Whole Effluent Toxicity (WET) Control Policy July 1994; and,

f. Technical Support Document (several chapters and Appendix B).

The circumstances warranting a numeric chronic toxicity effluent limitation when there is reasonable potential were under review by the State Water Resources Control Board (State Water Board) in SWRCB/OCC Files A-1496 & A-1496(a) [Los Coyotes/Long Beach Petitions]. On September 16, 2003, at a public hearing, the State Water Board adopted Order No. 2003-0012 deferring the issue of numeric chronic toxicity effluent limitations until Phase II of the SIP is adopted. In the mean time, the State Water Board replaced the numeric chronic toxicity limitation with a narrative effluent limitation and a 1 TUc trigger, in the Long Beach and Los Coyotes WRP NPDES permits. This permit contains a similar narrative chronic toxicity effluent limitation, with a numeric trigger for accelerated monitoring. Phase II of the SIP has been adopted, however, the toxicity control provisions were not revised.

On January 17, 2006, the State Water Board Division of Water Quality held a California Environmental Quality Act (CEQA) scoping meeting to seek input on the scope and content of the environmental information that should be considered in the planned revisions of the Toxicity Control Provisions of the Policy for Implementation of Toxics Standards for Inland Surface Waters, Enclosed Bays, and Estuaries of California (SIP). However, the Toxicity Control Provisions of the SIP continue unchanged.

This Order contains a reopener to allow the Regional Water Board to modify the permit, if necessary, consistent with any new policy, law, or regulation. Until such time, this Order will have toxicity limitations that are consistent with the State Water Board's precedential decision.

a. Acute Toxicity Limitation:

The Dischargers may test for acute toxicity by using USEPA's *Methods for Measuring the Acute Toxicity of Effluents and Receiving Waters to Freshwater and Marine Organisms*, October 2002 (EPA-821-R-02-012). Acute toxicity provisions in the accompanying Order are derived from the Basin Plan's toxicity standards (Basin Plan 3-16 and 3-17). The provisions require the Discharger to accelerate acute toxicity monitoring and take further actions to identify the source of toxicity and to reduce acute toxicity.

b. Chronic Toxicity Limitation and Requirements:

Chronic toxicity provisions in the accompanying Order are derived from the Basin Plan's toxicity standards (Basin Plan 3-16 and 3-17). The provisions require the Discharger to accelerate chronic toxicity monitoring and take further actions to

identify the source of toxicity and to reduce chronic toxicity. The monthly median trigger of 1.0 TU_c for chronic toxicity is based on *USEPA Regions 9 & 10 Guidance for Implementing Whole Effluent Toxicity (WET) Programs* Final May 31, 1996 (Chapter 2 – Developing WET Permitting Conditions, page 2-8). In cases where effluent receives no dilution or where mixing zones are not allowed, the I.0 TU_c chronic criterion should be expressed as a monthly median. The "median" is defined as the middle value in a distribution, above which and below which lie an equal number of values. For example, if the results of the WET testing for a month were 1.5, 1.0, and 1.0 TU_c, the median would be 1.0 TU_c.

The *USEPA Regions 9 & 10 Guidance for Implementing Whole Effluent Toxicity (WET) Programs* Final May 31, 1996 (Chapter 2 – Developing WET Permitting Conditions, page 2-8) recommends two alternatives for setting up maximum daily limitation: using 2.0 TUc as the maximum daily limitation; or using a statistical approach outlined in the TSD to develop a maximum daily effluent limitation.

D. Final Effluent Limitations

1. Satisfaction of Anti-Backsliding Requirements

The effluent limitations in this Order are at least as stringent as the effluent limitations in the previous Order, with the exception of the average monthly effluent limitation (AMEL) of dichlorobromomethane. The AMEL of dichlorbromomethane was derived using the effluent-specific CV (calculated based on the effluent monitoring data from 2006 to 2009), in a manner consistent with the procedures in Section 1.4 of the State Water Resources Control Board Policy for Implementation of Toxics Standards for Inland Surface Waters, Enclosed Bays, and Estuaries of California (2000) (hereinafter, SIP). The resulting average monthly effluent limitation of 77 µg/L is higher than the AMEL of 64 µg/L contained in Order No. 2005-0074. This relaxation of effluent limitation is consistent with the anti-backsliding requirements of the CWA and federal regulations.

2. Satisfaction of Antidegradation Policy

On October 28, 1968, the State Water Board adopted Resolution No. 68-16, *Maintaining High Quality Water*, which established an antidegradation policy for State and Regional Water Boards. The State Water Board has, in State Water Board Order No. 86-17 and an October 7, 1987 guidance memorandum, interpreted Resolution No. 68-16 to be fully consistent with the federal antidegradation policy. Similarly, the CWA (section 304(d)(4)(B)) and USEPA regulations (40 C.F.R. §131.12) require that all permitting actions be consistent with the federal antidegradation policy. Together, the State and Federal policies are designed to ensure that a water body will not be degraded resulting from the permitted discharge. The provisions of this Order are consistent with the antidegradation policies.

3. **Stringency of Requirements for Individual Pollutants**

This Order contains restrictions on individual pollutants that are no more stringent than required by the federal CWA. Individual pollutant restrictions consist of technology-based and water quality-based effluent limitations. The technology-based effluent limitations consist of restrictions on biochemical oxygen demand (5-day) (BOD_5), total suspended solids (TSS), and pH, and percent removal of BOD_5 and TSS, which implement the minimum, applicable federal technology-based requirements for POTWs. . Restrictions on BOD, TSS and pH are discussed in Section IV.B. of the Fact Sheet. This Order's technology-based pollutant restrictions implement the minimum, applicable federal technology-based requirements. The Regional Board has considered the factors in California Water Code section 13241 in establishing these requirements.

Water quality-based effluent limitations have been scientifically derived to implement water quality objectives that protect beneficial uses. Both the beneficial uses and the water quality objectives have been approved pursuant to federal law and are the applicable federal water quality standards. To the extent that toxic pollutant water quality-based effluent limitations were derived from the CTR, the CTR is the applicable standard pursuant to part 131.38. The scientific procedures for calculating the individual water quality-based effluent limitations for priority pollutants are based on the CTR-SIP, which was approved by USEPA on May 18, 2000. All beneficial uses and water quality objectives contained in the Basin Plan were approved under State law and submitted to and approved by USEPA prior to May 30, 2000. Any water quality objectives and beneficial uses submitted to USEPA prior to May 30, 2000, but not approved by USEPA before that date, are nonetheless "applicable water quality standards for purposes of the CWA" pursuant to part 131.21(c)(1). Collectively, this Order's restrictions on individual pollutants are no more stringent than required by the CWA.

This Order contains effluent limitations more stringent than the minimum, federal technology-based requirements that are necessary to meet water quality standards. Specifically, this Order includes performance-based effluent limitations for TSS and BOD_5 that are more stringent than the federal secondary treatment standards. The previous Order contains these performance-based effluent limits for TSS and BOD_5, with which the Discharger has consistently complied. The monthly average and the daily maximum limits cannot be relaxed because none of the exceptions under the Anti-backsliding Policy apply.

In addition, this Order includes effluent limitations for bis(2-ethylhexyl)phthalate for the Discharge Point 005 that is more stringent than applicable federal standards, but that are nonetheless necessary to meet numeric objectives or protect beneficial uses. The rationale for including this limitation for the Discharge Point 005 is that the Los Angeles River (the receiving water body) is listed for ground water recharge, and therefore, California Code of Regulations, Title 22 Maximum Contaminant Levels (California MCL) is applicable. The California MCL for bis(2-ethylhexyl)phthalate is more stringent than the USEPA MCL and more stringent than

the CTR criteria. The monthly average effluent limitation for bis(2-ethylhexyl)phthalate is the only limitation more stringent than the federal requirements. Therefore, an economic analysis should be done for bis(2-ethylhexyl)phthalate.

Also, the Regional Water Board has considered the factors in Water Code section 13241. According to section 13241 of the CWC, the factors to be considered by a Regional Water Board in establishing water quality objectives include, but are not necessarily be limited to, all of the following:

(a) Past, present, and probable future beneficial uses of water.
(b) Environmental characteristics of the hydrographic unit under consideration, including the quality of water available thereto.
(c) Water quality conditions that could reasonably be achieved through the coordinated control of all factors which affect water quality in the area.
(d) Economic considerations.
(e) The need for developing housing within the region.
(f) The need to develop and use recycled water.

Regional Water Board staff have considered all of the above factors.

The proposed Order is protective of all beneficial uses of surface waters (using CWA) and ground water (using CWC);

The environmental characteristics of the discharge and of the watershed in which the facility is located have been taken into consideration.

Limitations, which could reasonably be achieved, have been placed in the Order to protect the water quality of the immediate receiving waters and those located downstream of the discharge point;

Economic considerations have also been provided:

1. **Economic Analysis**. The technical and economic feasibility of regulating MCLs is evaluated as part of the MCL development and adoption process by the California Department of Public Health (formerly known as the Department of Health Services), a sister agency. The technical feasibility includes an evaluation of commercial laboratories' ability to analyze for and detect the chemical in drinking water, the costs of monitoring, and the costs of treatment required for pollutant removal.

2. **Requirements under future WRR Order for Recycling**
   The Tapia WRF's treatment system includes filtration and disinfection; therefore, its effluent should be able to comply with the current California MCLs for inorganic and organic chemicals.

3. **Similar Facilities**. Other POTWs in Region 4 have similar NPDES permit requirements. When Regional Water Board staff was preparing the first set of permits that would implement the SIP and the CTR, they asked the State Water Board, Division of Water Quality's Standard Development Section to prepare an economic analysis of the cost of complying with the California Toxics Rule for the five Los Angeles County Sanitation District (LACSD) inland POTWs in the San Gabriel River Watershed. The State Water Board contracted Sciences Applications International Corporation (SAIC) to prepare the economic analysis. Their report titled, *Potential Costs of Complying with the California Toxics Rule for Five Los Angeles County Sanitation District Facilities* (March 21, 2001), presented a worst case scenario and a most likely control scenario for all five facilities. Of the five LACSD POTWs, the smallest is the Pomona WRP, with a 15 MGD capacity. For the Pomona WRP, the worst case control scenario would require the use of Granular Activated Carbon (GAC), with a construction cost of about $12 Million, and an operation costs of $387,000 per year. The most likely control scenario required implementation of a source control or pollutant minimization program, a plant study for process optimization, and an improved coagulant chemical addition process, at a cost of $141,000 per year. Although the focus of the study was to consider CTR-based limits, the study did include consideration of the 4 µg/L MCL-based limitation for Bis(2-ethylhexyl)phthalate. The LACSD plants have focused on source control and techniques to achieve compliance with their permit limitations. In the case of Bis(2-ethylhexyl)phthalate, using cleaner sampling techniques has made a big difference in eliminating the amounts of detects (or false positives) obtained. The clean hands technique involved using gloves and bottles that were free of phthalates, for example using teflon and glassware. In no case did any of the LACSD POTWs have to install costly treatment systems for the removal of CTR-based or MCL-based pollutants.

Regional Water Board staff conclude that additional treatment units would not be required to meet the effluent limitation for bis(2-ethylhexyl)phthalate contained in the accompanying Order, in light of the above considerations as well as the fact that the most recent set of monitoring data (2009) does not indicate that the Discharger would have difficulty in achieving this effluent limitation. The Discharger may conduct an economic analysis and submit it to the Regional Water Board for consideration, during the public comment period, if so desired.

The Discharger has not submitted any economic information to indicate what the cost of complying with this Order would be. As discussed in other sections of the Fact Sheet, the individual pollutant restrictions are reasonably necessary to protect beneficial uses identified in the Basin Plan, and the economic information related to costs of compliance are not sufficient, in the Regional Water Board's determination, to justify failing to protect beneficial uses. The Regional Water Board adopted on November 3, 2005, a Time Schedule Order that included an interim limitation for bis(2-ethylhexyl)phthalate, and the requirement to achieve full compliance with the final limitation for bis(2-ethylhexyl)phthalate by May 17, 2010. Therefore, it is not appropriate to issue another Time Schedule Order.

Summary of Final Effluent Limitations

Table F-6. Summary of Final Effluent Limitations

Final Effluent Limitations Applicable to Discharge Points 001, 002, 003, and 005							
Parameter	**Units**	**Effluent Limitations**					**Basis**
		Average Monthly	**Average Weekly**	**Max. Daily**	**Instanta-neous Minimum**	**Instanta-neous Maximum**	
Biochemical Oxygen Demand 5-day @ 20°C	mg/L	10	--	20	--	--	Existing
	lbs/day[2]	1.3E3	--	2.7E3	--	--	calculated
Total Suspended Solids	mg/L	5.0	--	10	--	--	Existing
	lbs/day [10]	6.7E2	--	1.3E3	--	--	Calculated
pH	standard units	--	--	--	6.5	8.5	Existing
Settleable Solids	ml/L	0.1	--	0.2	--	--	Existing
Oil and grease	mg/L	5	--	10	--	--	Existing
	lbs/day[10]	6.7E2		1.3E3	--	--	Calculated
Total Residual Chlorine	mg/L	--	--	0.1	--	--	Existing
MBAS	mg/L	0.5	--	--	--	--	Existing
	lbs/day[10]	67	--	--	--	--	Calculated
Mercury	µg/L	5.1E-2	--	0.10	--	--	CTR/SIP
	lbs/day[10]	6.8E-3	--	1.3E-2	--	--	Calculated
Cyanide	µg/L	4.2		8.5			CTR/SIP
	lbs/day[10]	0.56		1.1			Calculated
Aldrin	µg/L	1.4E-4	--	3.0E-4	--	--	CTR/SIP
	lbs/day[10]	1.9E-5	--	4.0E-5	--	--	Calculated
Alpha-BHC	µg/L	1.3E-2	--	2.6E-2	--	--	CTR/SIP
	lbs/day[10]	1.7E-3	--	3.5E-3	--	--	Calculated
Dichlorobromomethane	µg/L	46	--	77	--	--	CTR/SIP

[2] The mass emission rates are based on the plant design flow rate of 16.1 MGD, and are calculated as follows: Flow(MGD) x Concentration (mg/L) x 8.34 (conversion factor) = lbs/day. During wet-weather storm events in which the flow exceeds the design capacity, the mass discharge rate limitations shall not apply, and concentration limitations will provide the only applicable effluent limitations.

	lbs/day[10]	6.2	--	10	--	--	Calculated
4,4'-DDE	µg/L	5.9E-4	--	1.2E-3			CTR/SIP
	lbs/day[10]	7.9E-5	--	1.6E-4			Calculated
4,4'-DDD	µg/L	8.4E-4	--	1.7E-3			CTR/SIP
	lbs/day[10]	1.1E-4	--	2.3E-4			Calculated
Dieldrin	µg/L	1.4E-4	--	3.0E-4			CTR/SIP
	lbs/day[10]	1.8E-5	--	4.0E-5			Calculated
Endrin	µg/L	4.3E-2	--	8.6E-2			CTR/SIP
	lbs/day[10]	5.8E-3	--	1.2E-2			Calculated
Heptachlor	µg/L	2.1E-4	--	4.0E-4			CTR/SIP
	lbs/day[10]	2.8E-5	--	5.4E-5			Calculated

Final Effluent Limitations Applicable to Discharge Points 001, 002, and 003 ONLY

Parameter	Units	Effluent Limitations					Basis
		Average Monthly	Average Weekly	Max. Daily	Instanta-neous Minimum	Instanta-neous Maximum	
Total dissolved solids	mg/L	2000	--	--	--	--	Existing
	lbs/day[10]	2.7E5	--	--	--	--	Calculated
Chloride	mg/L	500	--	--	--	--	Existing
	lbs/day[10]	6.7E4	--	--	--	--	Calculated
Sulfate	mg/L	500	--	--	--	--	Existing
	lbs/day[10]	6.7E4	--	--	--	--	Calculated
Boron	mg/L	2	--	--	--	--	Existing
	lbs/day[10]	2.7E2	--	--	--	--	Calculated
Total ammonia	mg/L	3.1	--	8.1	--	--	Basin Plan
	lbs/day[10]	4.2E2		1.1E3			Calculated
Nitrate + Nitrite as Nitrogen (NO_3-N + NO_2-N)	mg/L	8	--	--	--	--	USEPA-established TMDL
	lbs/day[10]	1.1E3					Calculated
Total phosphorus (Summer- April 15th – November 15th)	mg/L	3	--	--	--	--	Existing
	lbs/day[10]	4.0E2					Calculated
Total phosphorus (Winter- November 16th – April 14th)	mg/L	3	--	4	--	--	Existing
	lbs/day[10]	4.0E2		5.4E2			Calculated
Bis(2-Ethylhexyl)Phthalate	µg/L	5.9	--	15	--	--	CTR/SIP
	lbs/day[10]	0.79	--	2.0	--	--	Calculated

Final Effluent Limitations Applicable to Discharge Point 005 ONLY							
Parameter	**Units**	**Effluent Limitations**					**Basis**
		Average Monthly	**Average Weekly**	**Max. Daily**	**Instanta-neous Minimum**	**Instanta-neous Max.**	
Total dissolved solids	mg/L	950	--	--	--	--	Existing
	lbs/day[10]	1.3E5	--	--	--	--	Calculated
Chloride	mg/L	190	--	--	--	--	Existing
	lbs/day[10]	2.6E4	--	--	--	--	Calculated
Sulfate	mg/L	300	--	--	--	--	Existing
	lbs/day[10]	4.0E4	--	--	--	--	Calculated
Boron	mg/L	1.5	--	--	--	--	Existing
	lbs/day[10]	2.0E2	--	--	--	--	Calculated
Fluoride	mg/L	1.6	--	--	--	--	Existing
	lbs/day[10]	2.2E2	--	--	--	--	Calculated
Total Ammonia as N	mg/L	2.3	--	10.1	--	--	TMDL
	lbs/day[10]	3.1E2		1.36E4			Calculated
Nitrate + Nitrite as Nitrogen (NO_3-N + NO_2-N)	mg/L	8 [6]		--	--	--	TMDL
	lbs/day[10]	1.1 E3					Calculated
Nitrite as Nitrogen (NO_2-N)	mg/L	1 [6]	--	--	--	--	TMDL
	lbs/day[10]	1.3 E2					Calculated
Nitrate as N (NO_3-N)	mg/L	8 [6]	--	--	--	--	TMDL
	lbs/day[10]	1.1 E3					Calculated
Total Phosphorus	mg/L	3	--	4	--	--	Existing
	lbs/day[10]	4.0 E2	--	8.0 E2	--	--	Calculated
Arsenic	µg/L	10	--	--	--	--	Title 22 MCL/ TSD
	lbs/day[10]	1.3	--	--	--	--	Calculated
Perchlorate	µg/L	6	--	--	--	--	Title 22 MCL/ TSD
	lbs/day[10]	0.81	--	--	--	--	Calculated
Total trihalomethanes	µg/L	80	--	--	--	--	Title 22 MCL/ TSD
	lbs/day[10]	11	--	--	--	--	Calculated
Cadmium (wet weather)	µg/L	1.1	--	3.1	--	--	TMDL
	lbs/day[10]	0.1	--	0.4	--	--	Calculated

Copper (wet weather)	µg/L	11	--	17	--	--	TMDL
	lbs/day[10]	1.5	--	2.3	--	--	Calculated
Lead (wet weather)	µg/L	23	--	62	--	--	TMDL
	lbs/day[10]	3.1	--	8.3	--	--	Calculated
Zinc (wet weather)	µg/L	1.20E2	--	158	--	--	TMDL
	lbs/day[10]	16.1	--	21.3	--	--	Calculated
Copper (dry weather)	µg/L	27	--	41	--	--	TMDL
	lbs/day[10]	3.6	--	5.5	--	--	Calculated
Lead (dry weather)	µg/L	13	--	35	--	--	TMDL
	lbs/day[10]	1.7	--	4.7	--	--	Calculated
Selenium (dry weather)[8]	µg/L	4	--	8	--	--	TMDL
	lbs/day[10]	0.6	--	1	--	--	Calculated
Bis(2-Ethylhexyl)Phthalate	µg/L	4	--	15	--	--	AMEL- Title 22 MCL/ TSD; MDEL- CTR/SIP
	lbs/day[10]	0.54	--	2.0	--	--	Calculated

E. Interim Effluent Limitations – Not Applicable.

Parameter	Units	Effluent Limitations			
		Average Monthly	Maximum Daily	Instantaneous Minimum	Instantaneous Maximum
N/A					

F. Land Discharge Specifications

Not Applicable.

G. Reclamation Specifications

The discharger currently recycles treated effluent and plans on increasing the amount of water it recycles. The production, distribution, and reuse of recycled water for direct, non-potable applications are presently regulated under Water Reclamation Requirements (WRR) Order No. 87-48, adopted by this Regional Water Board on April 27, 1987.

V. RATIONALE FOR RECEIVING WATER LIMITATIONS

A. Surface Water

Receiving water limitations are based on water quality objectives contained in the Basin Plan and are a required part of this Order.

B. Groundwater

Limitations in this Order must protect not only surface receiving water beneficial uses, but also, the beneficial uses of underlying groundwater where there is a recharge beneficial use of the surface water. In addition to a discharge to surface water, there is discharge that can impact groundwater. Sections of the Malibu Creek and Los Angeles River, near the Tapia WRF discharge point, are designated as GWR beneficial use. Surface water from the Malibu Creek and Los Angeles River percolates into the Groundwater Basins listed in Table F-3b of this fact sheet. Since groundwater from these Basins is used to provide drinking water to the community, the groundwater aquifers should be protected.

VI. RATIONALE FOR MONITORING AND REPORTING REQUIREMENTS

Part 122.48 requires that all NPDES permits specify requirements for recording and reporting monitoring results. California Water Code sections 13267 and 13383 authorize the Regional Water Board to require technical and monitoring reports. The Monitoring and Reporting Program (MRP), Attachment E of this Order, establishes monitoring and reporting requirements to implement federal and State requirements. The following provides the rationale for the monitoring and reporting requirements contained in the MRP for this facility.

A. Influent Monitoring

Influent monitoring is required:

- To determine compliance with the permit conditions for BOD_5 20°C and suspended solids removal rates;
- To assess treatment plant performance;
- To assess the effectiveness of the Pretreatment Program (once a pretreatment program is in place); and,
- As a requirement of the Pollution Minimization Program

B. Effluent Monitoring

The Discharger is required to conduct monitoring of the permitted discharges in order to evaluate compliance with permit conditions. Monitoring requirements are given in the proposed Monitoring and Reporting Program (Attachment E). This provision requires compliance with the Monitoring and Reporting Program, and is based on 40 C.F.R. parts 122.44(i), 122.62,122.63, and 124.5. The Monitoring and Reporting Program is a standard requirement in almost all NPDES permits (including the proposed Order) issued by the Regional Water Board. In addition to containing definition of terms, it specifies general sampling/analytical protocols and the requirements of reporting spills, violation, and routine monitoring data in accordance with NPDES regulations, the California Water Code, and Regional Water Board policies. The Monitoring and Reporting Program also contains sampling program specific for the Discharger's wastewater treatment plant. It defines the sampling stations and frequency, pollutants to be monitored, and additional reporting requirements. Pollutants to be monitored include all pollutants for which effluent limitations are specified. Further, in accordance with Section 1.3 of the SIP, a periodic monitoring is required for all priority pollutants defined by the CTR, for which criteria apply and for which no effluent limitations have been established, to evaluate reasonable potential to cause or contribute to an excursion above a water quality standard.

Monitoring for those pollutants expected to be present in the discharge from the facility, will be required as shown on the proposed Monitoring and Reporting Program (Attachment E) and as required in the SIP. Monitoring requirements are largely unchanged from the previous Order. However, the frequency of monitoring has been

reduced for those pollutants which no longer have effluent limits, due to the fact that there is no longer any reasonable potential for those pollutants to cause or contribute to an exceedance. Semi-annual monitoring for priority pollutants in the effluent is required in accordance with the Pretreatment requirements.

C. Whole Effluent Toxicity Testing Requirements

Whole effluent toxicity (WET) protects the receiving water quality from the aggregate toxic effect of a mixture of pollutants in the effluent. An acute toxicity test is conducted over a short time period and measures mortality. A chronic toxicity test is conducted over a longer period of time and may measure mortality, reproduction, and growth.

This requirement establishes conditions and protocol by which compliance with the TMDL WLA for toxicity, consistent with Section 4.0 of the SIP. Conditions include required monitoring and evaluation of the effluent for acute and chronic toxicity and a 1.0 TUc numerical value for chronic toxicity, to be used as 'triggers' for initiating accelerated monitoring and toxicity reduction evaluation(s).

D. Receiving Water Monitoring

1. Surface Water

Receiving water monitoring is required to determine compliance with receiving water limitations and to characterize the water quality of the receiving water.

2. Groundwater – Not Applicable.

E. Other Monitoring Requirements

1. Watershed Monitoring and Bioassessment Monitoring

The goals of the Watershed-wide Monitoring Program including the bioassessment monitoring for the Malibu Creek and Los Angeles River Watershed are to:

- Determine compliance with receiving water limits;
- Monitor trends in surface water quality;
- Ensure protection of beneficial uses;
- Provide data for modeling contaminants of concern;
- Characterize water quality including seasonal variation of surface waters within the watershed;
- Assess the health of the biological community; and
- Determine mixing dynamics of effluent and receiving waters in the estuary.

VII. RATIONALE FOR PROVISIONS

A. Standard Provisions

Standard Provisions, which apply to all NPDES permits in accordance with part 122.41, and additional conditions applicable to specified categories of permits in accordance with part 122.42, are provided in Attachment D. The discharger must comply with all standard provisions and with those additional conditions that are applicable under part 122.42.

Part 122.41(a)(1) and (b) through (n) establish conditions that apply to all State-issued NPDES permits. These conditions must be incorporated into the permits either expressly or by reference. If incorporated by reference, a specific citation to the regulations must be included in the Order. Part 123.25(a)(12) allows the State to omit or modify conditions to impose more stringent requirements. In accordance with part 123.25, this Order omits federal conditions that address enforcement authority specified in Part 122.41, subsections (j)(5) and (k)(2), because the enforcement authority under the California Water Code is more stringent. In lieu of these conditions, this Order incorporates by reference California Water Code section 13387(e).

B. Special Provisions

1. Reopener Provisions

This provision is based on 40 C.F.R. part 123. The Regional Water Board may reopen the permit to modify permit conditions and requirements. Causes for modifications include the promulgation of new regulations, modification in sludge use or disposal practices, or adoption of new regulations by the State Water Board or Regional Water Board, including revisions to the Basin Plan.

2. Special Studies and Additional Monitoring Requirements

a. **Constituents of Emerging Concern (CEC) Special Study** – The Discharger shall initiate an investigation of CECs in the Discharger's effluent by conducting a special study The requirements of the CEC Special Study are included under Attachment E (MRP, section IX.A)

b. **Antidegredation Analysis and Engineering Report for Proposed Plant Expansion.** This provision is based on the State Water Resources Control Board Resolution No. 68-16. The intent of Resolution No. 68-16 was to ensure that, when the quality of some waters of the State is higher than that established by the adopted policies, such higher quality be maintained to the maximum extent possible. The resolution states that an activity, which produces or may produce an increased volume of waste, as in the case of increased wastewater treatment plant capacity, is required to meet waste discharge requirements, which will result in the best practicable treatment or control of the discharge necessary to assure that (a) a pollution or nuisance will not occur and (b) the highest water

quality consistent with maximum benefit to the people of the State will be maintained. Consistent with the intent of the Resolution No. 68-16, this provision requires the Discharger to clarify in writing, in the event of a planned plant capacity augmentation, that the projected increased volume of discharge will be accompanied by the addition of new treatment system(s) to ensure that higher water quality will be maintained. This provision requires the Discharger to report specific time schedules for the plant projects. This provision requires the Discharger to submit report to the Regional Water Board for approval.

c. **Operations Plan for Proposed Expansion.** This provision is based on Section 13385(j)(1)(D) of the California Water Code and allows a time period not to exceed 90 days in which the Discharger may adjust and test the treatment system(s). This provision requires the Discharger to submit an Operations Plan describing the actions the Discharger will take during the period of adjusting and testing to prevent violations.

d. **Treatment Plant Capacity.** The treatment plant capacity study required by this Order shall serve as an indicator for the Regional Water Board regarding Facility's increasing hydraulic capacity and growth in the service area.

e. Toxicity Reduction Requirements

If the discharge consistently exceeds an effluent limitation for toxicity as specified in this Order/Permit, the Discharger shall conduct a TRE as detailed in section V of the MRP (Attachment E). The TRE will help the Discharger identify the possible source(s) of toxicity. The Discharger shall take all reasonable steps to reduce toxicity to the required level.

3. **Best Management Practices and Pollution Prevention**

a. Spill Clean-Up Contingency Plan (SCP)

Since spills or overflows are a common event in the POTW service area, this Order/Permit requires the Discharger to review and update, if necessary, SCP after each incident. The Discharger shall ensure that the up-to-date SPC is readily available to the sewage system personnel at all times and that the sewage personnel are familiar with it.

b. Pollutant Minimization Program.

This provision is based on the requirements of Section 2.4.5 of the SIP.

4. **Construction, Operation, and Maintenance Specifications**

This provision is based on the requirements of 40 C.F.R. 122.41(e) and the previous Order.

5. **Special Provisions for Municipal Facilities (POTWs Only)**

   a. **Biosolids Requirements.** To implement CWA Section 405(d), on February 19, 1993, USEPA promulgated 40 C.F.R. part 503 to regulate the use and disposal of municipal sewage sludge. This regulation was amended on September 3, 1999. The regulation requires that producers of sewage sludge meet certain reporting, handling, and disposal requirements. It is the responsibility of the Discharger to comply with said regulations that are enforceable by USEPA, because California has not been delegated the authority to implement this program. The Discharger is also responsible for compliance with WDRs and NPDES permits for the generation, transport and application of biosolids issued by the State Water Board, other Regional Water Boards, Arizona Department of Environmental Quality or USEPA, to whose jurisdiction the Facility's biosolids will be transported and applied.

   b. **Pretreatment Requirements.** This permit contains pretreatment requirements consistent with applicable effluent limitations, national standards of performance, and toxic and performance effluent standards established pursuant to Sections 208(b), 301, 302, 303(d), 304, 306, 307, 403, 404, 405, and 501 of the CWA, and amendments thereto. This permit contains requirements for the implementation of an effective pretreatment program pursuant to Section 307 of the CWA; 40 C.F.R. parts 35 and 403; and/or Section 2233, Title 23, California Code of Regulations.

   c. **Spill Reporting Requirements.** This Order established a reporting protocol for how different types of spills, overflow or bypasses of raw or partially treated sewage from its collection system or treatment plant covered by this Order shall be reported to regulatory agencies.

      The State Water Board issued General Waste Discharge Requirements for Sanitary Sewer Systems, Water Quality Order No. 2006-0003-DWQ (General Order) on May 2, 2006. The General Order requires public agencies that own or operate sanitary sewer systems with greater than one mile of pipes or sewer lines to enroll for coverage under the General Order. The General Order requires agencies to develop sanitary sewer management plans (SSMPs) and report all sanitary sewer overflows (SSOs), among other requirements and prohibitions.

      Furthermore, the General Order contains requirements for operation and maintenance of collection systems and for reporting and mitigating sanitary sewer overflows. The Discharger must comply with both the General Order and this Order.

6. **Other Special Provisions**

   Not applicable.

7. **Compliance Schedules – Not Applicable.**

VIII. PUBLIC PARTICIPATION

The Regional Water Board is considering the issuance of waste discharge requirements (WDRs) that will serve as a National Pollutant Discharge Elimination System (NPDES) permit for the Tapia WRF. As a step in the WDR adoption process, the Regional Water Board staff has developed tentative WDRs. The Regional Water Board encourages public participation in the WDR adoption process.

A. Notification of Interested Parties

The Regional Water Board has notified the Discharger and interested agencies and persons of its intent to prescribe waste discharge requirements for the discharge and has provided them with an opportunity to submit their written comments and recommendations. Notification was provided by posting a notice in a newspaper of local circulation and by posting a notice at the Tapia WRF.

B. Written Comments

The staff determinations are tentative. Interested persons are invited to submit written comments concerning these tentative WDRs. Comments must be submitted either in person or by mail to the Executive Office at the Regional Water Board at the address above on the cover page of this Order.

To be fully responded to by staff and considered by the Regional Water Board, written comments must be received at the Regional Water Board offices by **5 PM** on **August 6, 2010**.

C. Public Hearing

The Regional Water Board will hold a public hearing on the tentative WDRs during its regular Board meeting on the following date and time and at the following location:

Date: September 2, 2010
Time: 9:00 AM
Location: Metropolitan Water District of Southern California
700 North Alameda Street
Los Angeles, California

Interested persons are invited to attend. At the public hearing, the Regional Water Board will hear testimony, if any, pertinent to the discharge, WDRs, and permit. Oral testimony will be heard; however, for accuracy of the record, important testimony should be in writing.

Please be aware that dates and venues may change. Our Web address is http://www.waterboards.ca.gov/losangeles/ where you can access the current agenda for changes in dates and locations.

D. Nature of Hearing

This will be a formal adjudicative hearing pursuant to section 648 et seq. of title 23 of the California Code of Regulations. Chapter 5 of the California Administrative Procedure Act (commencing with section 11500 of the Government Code) will not apply to this proceeding.

Ex Parte Communications Prohibited: As a quasi-adjudicative proceeding, no board member may discuss the subject of this hearing with any person, except during the public hearing itself. Any communications to the Regional Water Board must be directed to staff.

E. Parties to the Hearing

The following are the parties to this proceeding:

1. The applicant/permittee
2. Regional Water Board Staff
3. Heal the Bay

Any other persons requesting party status must submit a written or electronic request to staff not later than [20] business days before the hearing. All parties will be notified if other persons are so designated.

F. Public Comments and Submittal of Evidence

Persons wishing to comment upon or object to the tentative waste discharge requirements, or submit evidence for the Board to consider, are invited to submit them in writing to the above address. To be evaluated and responded to by staff, included in the Board's agenda folder, and fully considered by the Board, written comments must be received no later than **5 PM** on **August 6, 2010**.

Comments or evidence received after that date will be submitted, ex agenda, to the Board for consideration, but only included in administrative record with express approval of the Chair during the hearing. Additionally, if the Board receives only supportive comments, the permit may be placed on the Board's consent calendar, and approved without an oral testimony.

G. Hearing Procedure

The meeting, in which the hearing will be a part of, will start at **9:00 a.m**. Interested persons are invited to attend. Staff will present the matter under consideration, after which oral statements from parties or interested persons will be heard. For accuracy of

the record, all important testimony should be in writing. The Board will include in the administrative record written transcriptions of oral testimony that is actually presented at the hearing. Oral testimony may be limited to 30 minutes maximum or less for each speaker, depending on the number of persons wishing to be heard. Parties or persons with similar concerns or opinions are encouraged to choose one representative to speak. At the conclusion of testimony, the Board will deliberate in open or close session, and render a decision.

Parties or persons with special procedural requests should contact staff. Any procedure not specified in this hearing notice will be waived pursuant to section 648(d) of title 23 of the California Code of Regulations. Objections to any procedure to be used during this hearing must be submitted in writing not later than close of [15] business days prior to the date of the hearing. Procedural objections will not be entertained at the hearing.

If there should not be a quorum on the scheduled date of this meeting, all cases will be automatically continued to the next scheduled meeting on **October 7, 2010**. A continuance will not extend any time set forth herein.

H. Waste Discharge Requirements Petitions

Any aggrieved person may petition the State Water Resources Control Board to review the decision of the Regional Water Board regarding the final WDRs. The petition must be submitted within 30 days of the Regional Water Board's action to the following address:

State Water Resources Control Board
Office of Chief Counsel
P.O. Box 100, 1001 I Street
Sacramento, CA 95812-0100

I. Information and Copying

The Report of Waste Discharge (RWD), related documents, tentative effluent limitations and special provisions, comments received, and other information are on file and may be inspected at the address above at any time between 8:30 a.m. and 4:45 p.m., Monday through Friday. Copying of documents may be arranged through the Regional Water Board by calling (213) 576-6600.

J. Register of Interested Persons

Any person interested in being placed on the mailing list for information regarding the WDRs and NPDES permit should contact the Regional Water Board, reference this facility, and provide a name, address, and phone number.

K. Additional Information

Requests for additional information or questions regarding this order should be directed to Dr. Cathy Chang at (213) 576-6760.