Attachment 16
Technical Requirements – Closure and Post-Closure Plans (Item 19J)
Application to Amend APP No. P-101704

Florence Copper Project
Florence Copper Inc.

June 2019 (Updated September 2020)

HALEY ALDRICH

Table of Contents

Table of Contents 1

List of Exhibits 1

16.1 Introduction 2

16.1.1 Background 2

16.1.2 FCP Facilities 2

16.1.3 PTF Facilities Description 3

16.1.4 Existing Facilities 4

16.1.5 Closure Objective 5

16.2 Description of Closure Activities 5

16.2.1 Closure Activities in the ISCR Well Field 5

16.2.1.1 Groundwater Restoration Process 6

16.2.1.2 Well Closure 7

16.2.1.3 Closure of Surface Facilities 7

16.2.2 Materials Management 8

16.2.3 Soil Management 8

16.2.4 Closure Monitoring 8

16.2.5 Post-Closure Monitoring 9

16.3 Closure/Post-Closure Schedules 9

16.3.1 Closure Schedule 9

16.3.2 Post-Closure Monitoring Schedule 13

16.4 Closure/Post-Closure Cost Estimates 13

List of Exhibits

Exhibit No.	Title
16-1	UIC Permit Attachment E – Plugging and Abandonment Plan

Application to Amend Aquifer Protection Permit No. P-101704
Florence Copper Project

Attachment 16 (Item 19J): Technical Requirements — Closure and Post-Closure Plans

16.1 INTRODUCTION

16.1.1 Background

This Attachment conveys information describing the closure and post-closure plans for Florence Copper Project (FCP) discharging facilities in support of the application for significant amendment (application) of Aquifer Protection Permit (APP) No. P-101704 requested by Florence Copper Inc. (Florence Copper) in accordance with Arizona Administrative Code (A.A.C.) R18-9-A211(A)(1). The information presented in this Attachment is provided in response to Item 19J (Closure and Post-Closure Plans) of the application form.

This Attachment includes information that describes the closure and post-closure activities proposed by Florence Copper for the planned full-scale in-situ copper recovery (ISCR) facility which will include an ISCR well field, pregnant leach solution (PLS) pond, raffinate pond, runoff pond, water impoundments, and related infrastructure.

Information presented in this Attachment is more appropriately described as a closure strategy than a closure plan. Arizona Revised Statute (A.R.S.) § 49-243.A.8 requires applicants for individual permits to submit "closure strategies" with their applications, whereas A.A.C. R18-9-A209.B.3 requires an owner or operator of a permitted facility to submit a "closure plan" within 90 days after announcing an intent to permanently close all or part of the permitted facility.

In addition to this closure and post-closure strategy, Florence Copper is required to develop and comply with closure and post-closure plans in accordance the United States Environmental Protection Agency (USEPA) Underground Injection Control (UIC) regulations and to comply with the reclamation requirements of the Arizona State Land Department (ASLD) as specified in its regulations and in Mineral Lease No. 11-26500. The focus of this plan is to close the FCP components in a manner that will protect groundwater in accordance with APP and UIC regulations and that will be consistent with ASLD requirements.

16.1.2 FCP Facilities

The facilities listed below will be required for commercial ISCR operations, which will include development of the entire ISCR using a process of simultaneous development, operation, and closure of multiple resource blocks in sequential order. The proposed ISCR facility is generally described in Attachment 1 and is described in detail in Attachment 9.

ISCR operations will include:

- Existing office building and septic system, warehouse and shop facilities, core storage building, roads, and associated infrastructure.
- A variable number of bermed well field units which will vary in size and will contain a number of injection and recovery wells based on the site extraction plan and operational requirements.

Both the number and size of the units remaining at closure are dependent on the stage of development and operation within the ISCR area. Approximately 597 injection and recovery wells are estimated to be in existence at the commencement of closure.

- In addition to the injection and recovery wells, each well field unit will include a proportional number of perimeter and observation wells for monitoring and maintaining hydraulic control.
- Pipelines connecting each well head, including secondary containment such as lined pipe corridors, double walled pipe, or similar containment.
- Field offices and control facilities in the ISCR and water treatment and water impoundment area.
- Beneficiation area including:
  - Commercial-scale solvent extraction and electrowinning (SX/EW) plant with associated tanks;
  - Sulfuric acid delivery area, tank, transfer pump;
  - Dry lime delivery area, mixing tank, slaking system, transfer pump; and
  - PLS, raffinate, and runoff ponds.
- Five new water impoundments in addition to the existing BHP Copper Inc. (BHP Copper) water impoundment and the Production Test Facility (PTF) runoff pond and water impoundment described below.
- An expanded water treatment facility and tank farm.
- An expanded pad to accommodate the expanded water treatment facility and the expanded water treatment tank farm, multiple tank farms in the ISCR area, and additional pipelines and lined containment channels.
- Security fencing for the ISCR area, tank farms, and water impoundments.
- Upgraded power lines, an expanded electrical substation, and other infrastructure to support full-scale commercial operations.
- Thirty-two Point of Compliance (POC) wells.

In addition to these planned facilities, all facilities associated within the PTF will be incorporated in the full scale ISCR operations. The PTF-related facilities will be closed in the same manner as the full-scale ISCR facilities. The PTF well field will be incorporated into one of the well field units of the full scale ISCR facility and will be closed with the remainder of that unit when operations are completed in that unit.

16.1.3 PTF Facilities Description

Components of the PTF include:

- PTF well field including four injection wells, nine recovery wells, seven observation wells, four multi-level sampling wells, well heads, piping, and liners.
- Pipeline corridor including liner, sumps, a pipeline for PLS, and a pipeline for raffinate.
- Beneficiation area including:
  - Sulfuric acid delivery area, tank, transfer pump;
  - Dry lime delivery area, mixing tank, transfer pump;

- Raffinate tanks, transfer pumps;
- PLS tanks, transfer pumps;
- Runoff pond;
- Water impoundment;
- Modular trailers for offices, control rooms, etc.; and
- Pilot scale SX/EW plant.

  **Note: All components listed under "Beneficiation Area" are located on impermeable liners and either drain directly to the runoff pond or drain to lined sumps for collection and return to the runoff pond.

- Seven POC wells.

16.1.4 Existing Facilities

Existing discharging facilities within the proposed Pollutant Management Area (PMA) include those currently permitted under the terms of APP No. P-101704 and APP No. P-106360. A list of these discharging facilities is provided in Tables 1-1 and 1-2 of Attachment 1. It is important to note that most of the discharging facilities permitted under APP No. P-101704 were never constructed but are planned for construction following issuance of the amended APP pursuant to this application. Facilities (APP No. P-101704) that were not constructed include:

1. Majority of permitted injection and recovery wells. The only injection and recovery wells constructed under APP No. P-101704 were associated with the BHP Copper well field which included 21 UIC Class III injection, recovery, and observation wells. The ISCR well field contemplated under this permit includes more than 2,000 UIC Class III wells.
2. Raffinate pond. The planned beneficiation facility was not constructed, and consequently this pond was not needed or constructed. This application includes a request to permit a newly redesigned raffinate pond.
3. PLS pond. The planned beneficiation facility was not constructed, and consequently this pond was not needed or constructed. This application includes a request to permit a newly redesigned PLS pond.
4. Runoff pond. The planned beneficiation facility was not constructed, and consequently this pond was not needed or constructed. This application includes a request to permit a newly redesigned runoff pond.
5. Majority of water impoundments. A total of 13 water impoundments were originally contemplated for construction under APP No. P-101704. However, the planned operations by the previous owner did not proceed, which eliminated the immediate need for these impoundments, and only one impoundment was constructed. That impoundment remains active and is currently permitted and operated under the terms of APP No. P-101704. Florence Copper has redesigned the planned water impoundments and implemented operational efficiencies that have reduced the number of water impoundments required. This application includes a request to permit the newly redesigned water impoundments.

All of the facilities associated with APP No. P-10630 listed in Table 1-1 of Attachment 1 have been constructed and are currently in operation under the terms of that permit.

There are no known additional discharging facilities located within the proposed PMA. However, there are existing features (wells, coreholes, and underground workings) shown on Figures 8-1 and 8-2 that are associated with exploration activities that were conducted by previous owners in the 1970s and 1990s. All of the existing wells and coreholes within 500 feet of planned injection and recovery wells will be abandoned prior to commencement of injection as described below. All other features will be unaffected by the development and operation of the ISCR facility and will remain subject to the general closure and post-closure requirements of APP No. P-101704 and UIC Permit No. R9UIC-AZ3-FY11-1.

All wells and coreholes will be abandoned in accordance with the Plugging and Abandonment Plan that is included as Appendix C of UIC Permit No. R9UIC-AZ3-FY11-1. The Plan is included in this attachment as Exhibit 16-1. As shown on Figure 8-1 and 8-2, all wells and coreholes to be abandoned in advance of ISCR well field operations are located on Florence Copper property on the State Land parcel leased to Florence Copper.

16.1.5 Closure Objective

The closure objective is to ensure compliance with the requirements of A.R.S. §§ 49-243 B.2 and B.3 by preventing discharges of any pollutant that will cause or contribute to a violation of an Aquifer Water Quality Standard (AWQS) at the applicable POC, or that will further degrade at the applicable POC the quality of any aquifer that at the time of permit issuance violates the AWQS for that pollutant. To achieve these objectives, Florence Copper proposes to restore groundwater in each portion of the formation after injection and recovery of ISCR has been completed. Groundwater will be restored to a quality where constituents with AWQS meet the AWQS or pre-operational background concentrations if those concentrations exceed AWQS values. Restoring groundwater to this high quality results in a reduction in the concentration of all groundwater constituents, not just constituents with AWQS. Florence Copper also proposes to close surface facilities in a manner that will prevent contamination of the soil to prevent an exceedance of the pre-determined Soil Remediation Levels (SRL) for residential property as listed in Appendix A of the Arizona Soil Remediation Standards and the Groundwater Protection Limits (GPL) established by the Arizona Department of Environmental Quality (ADEQ).

This closure strategy addresses all components of ISCR operations, including APP-exempt facilities, to provide a comprehensive understanding of all proposed closure activities. This strategy and the related cost estimates provided in Attachment 3 address closure activities required by the APP, UIC, and ASLD programs. To avoid duplicative financial assurance, it is anticipated that the total amount of financial assurance provided to ADEQ will be reduced by the amounts covered by any requests made by the USEPA and ASLD for separate financial assurance instruments.

16.2 DESCRIPTION OF CLOSURE ACTIVITIES

The proposed closure ISCR facility activities are described below.

16.2.1 Closure Activities in the ISCR Well Field

Closure activities in the ISCR well field will occur in three steps: (1) restoration of groundwater quality to levels meeting AWQS or pre-operational concentrations if the pre-operational concentrations exceed AWQS; (2) closure (abandonment) of all ISCR wells in accordance with the Plugging and Abandonment Plan; and (3) closure of related surface facilities in the well field, including pipelines and tanks.

Once the injection has begun, the APP and the UIC Permit will require that hydraulic control be maintained in the well field from the time that injection begins until groundwater quality has been restored to meet the closure criteria specified. Groundwater restoration will begin after the scheduled operations have been completed and after a notice is given in accordance with A.A.C. R18-A209.B.2.

The groundwater restoration process involves rinsing the formation to reduce constituent concentrations to levels that meet AWQS or pre-operational concentrations if the pre-operational concentrations exceed AWQS. The groundwater pumped during rinsing will flow through the same tanks, piping, and equipment used during ISCR operations and will serve to rinse these components with increasingly high-quality water over the rinsing period. As a result, tanks, piping, and equipment will have been thoroughly rinsed by the time that ADEQ and USEPA approve the restoration and authorize abandonment of the wells. This will allow the removal of all tanks, piping, equipment, and liners from the well field to the runoff pond to commence simultaneously with the abandonment of the wells. For contingency purposes, however, the last FCP components to be dismantled will be, in order, the runoff pond and the water impoundment.

16.2.1.1 Groundwater Restoration Process

The following groundwater restoration process assumes a notice of permanent cessation has been given in accordance with A.A.C. R18-A209.B.2 and a closure plan has been submitted in accordance with A.A.C. R18-A209.B.3.

1. Restoration of groundwater will begin after injection for copper recovery has been discontinued. Restoration will be accomplished by using groundwater, or appropriately treated recycled water, to sweep residual ISCR solutions into recovery wells. The groundwater may be pulled from the aquifer surrounding the well field or it may be pumped from nearby wells and then injected. Injection may occur with or without buffering agents such as sodium bicarbonate or other non-hazardous neutralizing agents. The duration, rate, and extent of injection and neutralization will vary as the concentrations of sulfate and other constituents detected in ISCR solutions in the recovery well manifold change during the process. Because all ISCR wells are permitted as UIC Class III injection wells, all injection and recovery wells may be used to either inject rinse water with buffering agents or to extract rinse water. Each injection well may be converted for use as a recovery well, and vice versa, in order to enhance restoration efficiency.
2. As groundwater restoration nears completion, all injection wells will be converted to recovery wells to ensure that concentrations in recovery well manifold(s) are representative of groundwater quality in the ISCR well field.
3. Rinsing will continue and sulfate concentrations in the recovery well manifold solution will be periodically sampled until the sulfate concentration declines below 750 milligrams per liter (mg/L).
4. When sulfate concentrations in the recovery well manifold solution decline below 750 mg/L, a sample of manifold water will be collected and analyzed for the Level 2 parameters listed in APP No. P-101704.
5. Samples will be periodically collected from the recovery well manifold(s) and analyzed for Level 2 parameters until all constituents with AWQS either meet the AWQS or pre-operational concentrations if the pre-operational concentrations exceed the AWQS. Hydraulic control will continue until the sulfate concentration at each well is determined to meet the indicator sulfate concentration or alternate concentration as explained below. Provided that hydraulic control is maintained, pumping from any well may be suspended when groundwater quality at that well is determined to meet the indicator sulfate concentration or alternate concentration.

6. Once the sulfate concentration at each well is less than the indicator sulfate concentration or alternate concentration, hydraulic control will be suspended for 30 days.
7. After 30 or more days have elapsed, the recovery wells will be restarted and the sulfate concentration in solutions in the recovery well manifold(s) will be analyzed for sulfate. If the sulfate concentration(s) are equal to or below the indicator sulfate concentration or alternate concentration, the closure criteria will be deemed to have been met and the rinsing and maintenance of hydraulic control will be discontinued.
8. A closure report documenting the results of the restoration process will be submitted to ADEQ and USEPA, and closure (abandonment) of the ISCR wells will commence promptly after ADEQ and USEPA have authorized abandonment of the wells.

The concept of using a well-specific alternate to the sulfate indicator concentration is based on the recognition that the sulfate concentration in some wells will likely be higher than the sulfate indicator concentration due to well-to-well variability in sulfate concentrations based on natural formation conditions. A well would be eligible for an alternate concentration only if the sulfate concentration is less than 750 mg/L and the constituents meet AWQS or pre-operational concentrations if they exceed the AWQS.

16.2.1.2 Well Closure

Wells within the ISCR well field will be closed in accordance with the schedule described in Section 16.3 below. All wells will be abandoned in accordance with procedures included in the Plugging and Abandonment Plan, attached as Exhibit 16-1. The Well Abandonment Plan is based on requirements of A.A.C. R12-15-816, administered by the Arizona Department of Water Resources, and the Code of Federal Regulations Title 40 Part 146.10, administered by the USEPA.

16.2.1.3 Closure of Surface Facilities

Once the ISCR wells have been abandoned, all well field equipment will be removed. Such equipment may include electrical equipment, power lines and poles, tanks, pipes, and all well head and pipe channel liners within the well field. Similar removal activities will occur throughout the FCP facility. During the removal process, some liquid and solid residues may be generated such as the removal of accumulated dust from liners. Such liquids and solid residues will be placed in the water impoundments or shipped to appropriately licensed off-site disposal facilities.

Because of the extensive use of secondary containment including liners, containment sumps, and other devices, it is anticipated that soil contamination will be minimal and that soils will qualify for clean closure in accordance with A.A.C. R18-9-A209.B.3. As liners are removed, they will be inspected for evidence of holes, tears, or defective seams that may have leaked. Soil in the area beneath the liner will be inspected and samples will be collected and analyzed in accordance with a site investigation plan previously submitted to and approved by ADEQ, as required by A.A.C. R18-9-A209.B.3. It is anticipated that the plan will require more intense sampling and analysis in any area where visible contamination is apparent (e.g., moist spots beneath liners) and a broader grid sampling approach where contamination is not apparent. Estimates of sampling costs are included in the closure cost estimates provided in Attachment 3. The soil investigation plan will require that ADEQ be promptly provided a remediation plan if the soil sampling and analysis described above provides verification of an exceedance of an SRL or a GPL, and that ADEQ approval be obtained prior to implementing the plan.

Decommissioned power poles, lines, and electrical equipment may be salvaged. Clean liners and pipes may also be salvaged or sent to facilities that recycle such material. All material that cannot be reused or salvaged will be transported to an appropriately licensed facility for disposal. Although the salvage of liners and piping is anticipated, the cost estimates in Attachment 5 include the cost of disposal for those items.

Once all equipment, liners, and other materials have been removed from the well field, pipeline corridors, and other FCP components, disturbed areas will be tested, backfilled as needed, disked, and a grader or other suitable equipment will level and contour the areas and any related berms to grades that are consistent with pre-development grades. The areas will then be prepared for seeding.

16.2.2 Materials Management

Closure of the ISCR components will require safe handling and disposal of all associated solutions. Process tanks and the runoff pond will be emptied of any remaining solution. All solutions will be shipped off site for use or disposal in accordance with applicable regulations, or they will be neutralized and placed in the water impoundments. As the restoration process proceeds, the emptied tanks and PLS and raffinate ponds will have been rinsed with water produced during the restoration process and the rinse water will be placed in the water impoundments.

Unused electrowinning reagents, fuels, lubricants, and other chemicals along with warehoused materials will be packaged in accordance with Department of Transportation regulations and shipped off site or disposed of in accordance with applicable regulations. The closure objective is to have all chemicals removed off site and disposed of in a manner that meets all applicable codes and regulations.

16.2.3 Soil Management

Consistent with the ADEQ Clean Closure Guidance (December 2004) and A.A.C. R18-9-A209.B.3, a site investigation plan for evaluating the quality of the soil and the vadose zone after facilities have been removed will be developed for ADEQ review and approval before closure begins.

All closure activities will be designed and conducted in accordance with applicable criteria in the Best Available Demonstrated Control Technology Guidance Manual. All closure activities will be conducted in a manner to prevent spillage of contaminants onto soil and, as tanks and underlying liners are removed, underlying soil will be inspected for signs of leakage. The same process will apply to the pipeline channel liners, PLS pond, raffinate pond, runoff pond, and water impoundments. Soil samples will be collected and analyzed in accordance with the approved site investigation plan. Soil cleanup (remediation) plans will be submitted for ADEQ approval in areas where residential SRL or GPL exceedances are verified. The remediation plans will be designed to achieve constituent levels that will be consistent with the expected post-closure use.

After remediation plans have been implemented and residual soil conditions are approved by ADEQ, the excavated area will be backfilled, disked, and leveled consistent with the pre-development grade.

16.2.4 Closure Monitoring

Closure monitoring will consist of physical inspections of surface facilities and monitoring of groundwater quality at the POC wells during the closure period.

Inspection monitoring of surface facilities will continue through the closure period at each of the locations and at the frequencies specified in APP No. P-101704 until liquid and solid residues have been removed from the facilities being monitored. POC well monitoring will be in accordance with the requirements of the APP at the 32 proposed POC wells described in Attachment 12. The POC well monitoring program will include two components (Level 1 and Level 2). Level 1 and Level 2 monitoring refer respectively to sampling and analysis of groundwater for the parameters listed in the APP. The monitoring will occur quarterly for Level 1 parameters and annually for Level 2 parameters. The contingency plan will be implemented in accordance with the APP (Attachment 13) throughout the closure period with respect to inspection monitoring as long as liquids and solid residues remain in the facilities being monitored. The contingency plan will be implemented with respect to the exceedance of Alert Levels and Aquifer Quality Limits (AQL) throughout the closure period.

16.2.5 Post-Closure Monitoring

Post-closure monitoring will include groundwater monitoring at the 32 POC wells. No ISCR well will be monitored because, during closure, all injection and recovery wells will have been properly abandoned. All other ISCR facility components used to store or manage ISCR solutions will also have been dismantled and removed after all material contained in the components have been rinsed and removed. Inspection of the closed areas will occur during POC well monitoring events and will focus on POC wells, signage, fences, re-vegetated areas, and storm water control measures. The inspections will also focus on the maintenance of conditions required to support disturbed areas to conditions existing prior to the development and operation of the ISCR facility or to such other conditions as specified in ASLD Mineral Lease 11-26500, as may be amended.

Groundwater monitoring at the POC wells will be conducted quarterly throughout the post-closure period with Level 1 monitoring conducted three quarters per year and Level 2 monitoring conducted one quarter per year. Data generated from each monitoring event will be promptly reviewed and the contingency plans will be followed in the event of an exceedance of an AQL.

16.3 CLOSURE/POST-CLOSURE SCHEDULES

16.3.1 Closure Schedule

During ISCR facility operations, a site investigation plan and closure plan will be developed and submitted to ADEQ in accordance with A.A.C. R18-9-A209(B)(1) and A.A.C. R18-9-A209(B)(3), respectively, in advance of the scheduled closure so that ADEQ will have the opportunity to approve the plans on or before the scheduled date of closure operations. After Florence Copper formally gives notice to ADEQ in accordance with A.A.C. R18-9-A209(B)(2) of intent to permanently cease ISCR facility operations, injection will be discontinued. Florence Copper will maintain hydraulic control at the ISCR well field until closure criteria specified in the APP and UIC Permit have been met.

1. At least 60 days before commencement of closure of the first well field unit to be closed as part of ISCR facility operations, the site investigation plan will be submitted to ADEQ for review. Any modification of the plan indicated by the review will be submitted to ADEQ for approval before closure commences at the first well field unit.
2. Full ISCR facility closure will formally begin when notice of intent to permanently cease operations is given in accordance with A.A.C. R18-9-A209.B.2.

3. If injection has not been previously discontinued, it will be discontinued after the permanent cessation notice is given but hydraulic control will be maintained until closure criteria have been met. Enhanced evaporation at the water impoundment will continue until the volume of water in the impoundment(s) is such that it is no longer required.
4. All monitoring required by the APP and the UIC Permit will continue.
5. Groundwater restoration in the well field unit(s) still requiring closure after commercial operations cease will begin after injection has been discontinued. Injection of formation water, with or without neutralizing material such as sodium bicarbonate, may be used to facilitate the restoration process. The schedule for such activities will depend on the concentration of sulfate and other constituents detected in solutions in the recovery well manifold(s).
6. As groundwater restoration nears completion, injection wells will be converted to recovery wells to ensure that concentrations in recovery well manifold solutions are representative of groundwater quality of the unit(s) being closed. The schedule for converting injection wells to recovery wells will depend on the injection schedule described above.
7. Within 90 days of submitting the notice of intent to cease operation, a closure plan will be submitted to ADEQ pursuant to A.A.C. R18-9-A209.B.3.
8. Rinsing of the well field unit(s) being closed will continue and sulfate concentrations in the recovery well manifold solutions will be periodically monitored.
9. After ADEQ reviews the closure plan, a post-closure plan and an application for APP amendment will be submitted to ADEQ if the closure plan is determined not to achieve clean closure and ADEQ requires closure and post-closure activities to be addressed pursuant to A.A.C. R18-9-A209.B.4. It is anticipated that 2 months will be required for ADEQ to review the closure plan. The post-closure plan and application to amend the permit are required to be submitted within 90 days following ADEQ notice.
10. When sulfate concentrations in recovery well manifold solutions decline below 750 mg/L, samples of manifold water will be collected and analyzed for the Level 2 parameters listed in the APP. It is estimated that up to 2 years will elapse after injection is ceased before sulfate concentrations in the manifolds decline to 750 mg/L.
11. Samples will be periodically collected from the recovery well manifolds and analyzed for Level 2 parameters until all constituents with AWQS either meet AWQS or pre-operational background concentrations if pre-injection concentrations exceeded AWQS. Before injection begins at a resource block, pre-operational background data will be collected from recovery manifolds and from one or more recovery wells within the resource block for analysis of Level 2 parameters.
12. The indicator sulfate concentration will be the sulfate concentration in the recovery well manifold(s) existing at the time that the Level 2 analysis indicates that constituents with AWQS meet AWQS (or meet pre-operational background concentrations if those concentrations exceeded AWQS).
13. After an indicator sulfate concentration has been determined, each well will be sampled for sulfate. Hydraulic control will continue until the sulfate concentration at each well is below the indicator sulfate concentration. Pumping from individual wells may be suspended when groundwater quality in samples from those wells is determined to meet the indicator sulfate concentration. It is estimated that the indicator sulfate concentration will be met in all wells within 24 months after sampling begins.
14. Once the sulfate concentration at each well is less than the indicator sulfate concentration, hydraulic control will be suspended at all wells in the resource block for 90 days.

15. After 90 or more days have elapsed, the recovery wells will be re-energized and the sulfate concentration in solutions taken from the recovery well manifold(s) will be analyzed for sulfate. If the sulfate concentrations are equal to or below the indicator sulfate concentration, the closure criteria for the block being closed will be deemed to have been met and the rinsing and maintenance of hydraulic control of the block will be discontinued.
16. Once the closure criteria have been met, a closure report documenting the results of the closure process will be submitted to ADEQ and USEPA with the quarterly report required by the respective permits, or earlier. Closure of the wells in the units in which the closure criteria were met (closed operational unit) will commence within 30 days of the filing of the report, unless ADEQ or USEPA object.
17. If ADEQ and USEPA do not object to well closure within 30 days following the submission of the closure report, closure of the ISCR wells will begin. Closure of surface facilities outside the closed operational units that are required to stay functional for well closure will not begin until the requirements for well closure have been met. Closure of surface facilities not required for well closure may commence any time after cessation notice is given.
18. Closure of the wells in each closed operational unit will be conducted in accordance with the approved Well Abandonment Plan (Appendix C of the UIC Permit). It is anticipated that a total of 597 injection and recovery wells in the final operational units will be closed in a period of approximately 18 months. FCP closure costs do not include closing the 21 BHP test wells and the 59 miscellaneous wells included because these will have been closed as part of commercial operations, as described above.
19. Once the wells have been closed in accordance with the Well Abandonment Plan, the well sites will be closed. It is estimated that all sites can be prepared for final revegetation within 9 months after the wells are closed.
20. All facilities subject to general permit closure criteria will be closed in accordance with those criteria.
21. Closure of the PLS and raffinate ponds will begin after they are no longer needed to support ISCR or SX/EW closure operations. Closure of the PLS and raffinate ponds will begin by removing all liquids and solid residues from the upper liner. The removed liquids will be placed in the water impoundments. The upper liner will be removed and placed aside. Any liquid observed on the lower liner and in the leachate collection and removal system (LCRS) will be removed and placed in the water impoundment. Residues recovered from above the liner and/or the LCRSs will be tested to verify they are non-hazardous and will be either placed in the water impoundment or removed off site for landfill disposal according to state and federal regulations. The lower liner and underlying soils will be inspected for visual signs of liner damage, liner defects, and leakage through the lower liner. The lower liner will be removed and soils will be sampled in accordance with the approved site investigation plan; any exceedance of an SRL or of a GPL detected as a result of the investigation will be addressed in accordance with the site investigation plan.
22. Piping and related containments between the ISCR well field area, the PLS and raffinate ponds, and the SX/EW plant will be rinsed, and the rinse water and associated sediments will be placed in the water impoundment. Soil beneath the containment liners will be sampled in accordance with the approved site investigation plan, and any exceedance of an SRL or of a GPL detected as a result of the investigation will be addressed in accordance with the site investigation plan.

23. The SX/EW plant, warehouse, and all other storage areas will be inspected for fuel, oil, process materials, and chemicals. All such material will be collected, packaged, and transported off site for use in other facilities or for disposal in accordance with state and federal regulations. No material regulated as a hazardous waste will be placed in the water impoundment. Tanks and piping removed from the plant or from other areas will be emptied and rinsed. The tanks and piping will be shipped to other facilities for use, to recycling facilities, or to a disposal facility in accordance with applicable regulations.

    Closure of the SX/EW plant will begin after the PLS and raffinate ponds have been emptied and rinsed. The tanks, processing equipment, and piping in the SX/EW plant will be emptied, cleaned, and stored on site until shipped to another operating facility, to a salvage facility, or to a disposal facility in accordance with applicable regulations. The rinse water will be placed in the water impoundment. The SX/EW plant building will be retained if it can serve a post-closure use. Otherwise, it will be demolished and the demolition debris will be salvaged, used for on-site fill, or shipped to off-site disposal facilities in accordance with applicable state and federal regulations.

24. Closure of the SX/EW plant runoff pond will begin after all tanks and piping within the SX/EW plant have been emptied and rinsed, and the rinse water and residues have been placed in the water impoundment. The pond liner will be rinsed, and the rinse water and sediments will be placed in the water impoundment. As the liner is removed, it will be inspected for visual signs of liner damage and liner defects. The underlying soil will be inspected for signs of leaks through the upper liner. Samples will be collected in accordance with the approved site investigation plan and any exceedance of an SRL or of a GPL detected as a result of the investigation will be addressed in accordance with the site investigation plan. Liners and LCRS materials and equipment from the plant runoff pond and from the PLS and raffinate ponds will be sold, shipped to a recycling facility, or shipped to a disposal facility in accordance with state and federal regulations. Liners and associated decommissioned equipment may be buried in place only if they will not interfere with a designated post-closure use of the property.

25. Closure of the tank farm associated with the water impoundments, including the neutralization circuit and the water treatment facilities, will begin after the water impoundment is no longer needed to support closure activities. After the tanks in the tank farm have been emptied and cleaned, they will be moved off the pad so that the liner may be removed, and the underlying soil tested in accordance with the sampling plan. The underlying soil will be managed in accordance with Section 16.3.1.3 guidelines. The tanks will be stored on site until they are shipped off site for salvage or recycling.

26. All piping and tanks (previously emptied) in the tank farm, and in pipelines between the ISCR area and the tank farm adjacent to the water impoundment, will be rinsed and the rinse water conveyed to the water impoundment. The rinsing process is estimated to take approximately 1 month.

27. Closure of the water impoundments not previously closed will begin after PLS and raffinate ponds, tanks, and containment areas have been emptied and rinsed with water. It is estimated that 6 months will be required to evaporate the water in the impoundment and to dewater the sediment.

28. After sediment in the water impoundment has dried sufficiently to support earth-moving equipment, the liners will be removed from the anchor trenches and folded inward to partially cover the sediment. The excavated area will be backfilled and the area leveled. A 3-foot cap will then be placed over the liner and any exposed sediments and onto the leveled area. After capping has been completed, the area will be prepared for seeding.
29. A report detailing the closure activities and the results thereof will be submitted to ADEQ and USEPA within 90 days following completion of all closure activities.

16.3.2 Post-Closure Monitoring Schedule

The post-closure monitoring schedule will begin in accordance with the schedule set forth in the UIC Permit immediately after closure activities have been completed, and will be continued as described in Section 16.2.5 above until post-closure requirements have been met.

During POC monitoring events, visual inspection of surface facilities will be conducted. Inspections will include, as appropriate, POC wells, signage, fences, re-vegetated areas, and storm water control measures. Conditions noted during inspections will be documented using inspection forms. Photographs and written reports will be used to document completion of indicated repairs. Repairs will be performed as indicated by the inspection monitoring program and will be documented in quarterly reports submitted to ADEQ. Florence Copper will submit a notice and report, with documentation, in accordance with the requirements of A.A.C. R18-9-A209(C) within 30 days following completion of the post-closure plan.

16.4 CLOSURE/POST-CLOSURE COST ESTIMATES

Attachment 3 includes closure cost estimates and post-closure cost estimates for FCP discharging facilities and related infrastructure. The post-closure costs included in Attachment 3 assume that the 32 POC wells will be monitored for 30 years.

Florence Copper is proposing to close individual operational units as they are depleted during the sequential development of the project and considers these closures as part of FCP operational costs. The closure and post-closure cost estimate included in Attachment 3 reflects this approach.

EXHIBIT 16-1

UIC Permit Attachment E – Plugging and Abandonment Plan

Attachment E
Plugging and Abandonment Plan (40 CFR §§ 144.31, 144.51 & 146.34)
Application for Class III Underground Injection Control Permit

Florence Copper Project
Florence Copper Inc.

October 2019

Table of Contents

		Page
Table of Contents		**i**
List of Exhibits		**i**
E.1	INTRODUCTION	1
E.2	PLUGGING AND ABANDONMENT	1
E.2.1	Applicability	1
E.2.2	Objectives	2
E.2.3	Hydrogeologic Setting	2
E.2.4	Overview of ISCR Operations	2
E.2.5	Licenses, Notifications, and Approvals	3
E.2.5.1	Licensed Drillers	3
E.2.5.2	Abandonment Notification and Authorization	3
E.3	WELL AND CORE HOLE ABANDONMENT PROCEDURES	4
E.3.1	Well or Core Hole Preparation	4
E.3.2	Equipment and Materials	5
E.3.3	General Procedure for Sealing Wells and Core Holes	5
E.3.4	Procedures for Special Circumstances	5
E.3.5	Documentation and Reporting	6
E.3.5.1	Reporting Responsibilities	6
E.3.5.2	Reports to ADWR	6
E.3.5.3	Reports to USEPA	6
E.3.5.4	Reports to ADEQ	7
E.3.5.5	Maintenance of Records	7
E.4	PLUGGING AND ABANDONMENT FORMS	7
E.5	PLUGGING AND ABANDONMENT COST ESTIMATE	8

List of Exhibits

Exhibit No.	Title
E-1	Form 7520-19, Schematic Diagrams of Planned Class III ISCR Wells by Resource Block
E-2	Plugging and Abandonment Forms for Non-Class III Wells within AOR
E-3	Plugging and Abandonment Forms for Core Holes within AOR
E-4	Plugging and Abandonment Forms for BHP Class III Test Wells

Application for Class III Underground Injection Control Permit
Florence Copper Project

Attachment E: Plugging and Abandonment Plan (40 CFR §§ 144.31. 144.51 & 146.34)

E.1 INTRODUCTION

This Attachment describes the plugging and abandonment procedures and individual well and core hole details.

This Attachment has been prepared in support of an application (Application) by Florence Copper Inc. (Florence Copper) to the United States Environmental Protection Agency (USEPA) for an Underground Injection Control Class III Permit (UIC Permit) for the planned In-Situ Copper Recovery (ISCR) facility at the Florence Copper Project (FCP) in Pinal County, Arizona. With this Application, Florence Copper seeks authorization to construct and operate a commercial-scale ISCR facility at the FCP site. Florence Copper proposes to incorporate the pilot-scale Production Test Facility (PTF), which is currently operating under UIC Permit R9UIC-AZ3-FY11-1, into the planned commercial-scale ISCR facility at the FCP site.

This plugging and abandonment plan is based on Appendix C of UIC Permit R9UIC-AZ3-FY11-1, with revision and updates as necessary to reflect the proposed operations and operational experience at the PTF.

E.2 PLUGGING AND ABANDONMENT

E.2.1 Applicability

This plugging and abandonment plan is applicable to proposed Class III wells, existing Class III wells, and non-Class III wells and core holes within the FCP ISCR area and the associated Area of Review (AOR) located at the FCP site. This plan applies to all wells and core holes within the AOR because the corrective action for each of the wells and core holes within the AOR is to plug and abandon them using Class III well standards. The AOR is defined in Attachment A of this Application as a 500-foot circumscribing area around the planned commercial-scale ISCR well field.

This plan also applies to existing Class III wells outside of the PTF AOR that were constructed by BHP Copper Inc. (BHP) in accordance with UIC Permit No. AZ396000001. The BHP Class III wells may be plugged and abandoned following completion of PTF operations if Florence Copper chooses not to proceed with commercial-scale operations on the property. If Florence Copper chooses to proceed with commercial-scale operations on the FCP property, they may incorporate the existing BHP Class III wells into future phases of FCP operations.

This plugging and abandonment plan has been designed to ensure that all existing and future wells and core holes located within the AOR will be plugged and abandoned (1) in a manner that will prevent or stop the migration of injected solutions into Underground Sources of Drinking Water (USDW) through a penetrating core hole or well, and (2) in accordance with applicable permits and regulations

administered by the USEPA, the Arizona Department of Environmental Quality (ADEQ), and Arizona Department of Water Resources (ADWR).

Plugging and abandonment of existing non-Class III wells and core holes within the AOR will occur prior to commencement of injection within 500 feet of the well or core hole. Plugging and abandonment of Class III wells will occur during closure, or when an individual Class III well is retired or closed. Retirement of a Class III well may occur if the well fails to pass mechanical integrity testing or if the well becomes damaged beyond repair.

All abandonment notifications, approvals, procedures, documentation, and reporting required under this plan apply to all Class III wells constructed within the commercial-scale AOR, which includes the PTF wells and BHP test wells.

E.2.2 Objectives

The objectives of the plugging and abandonment plan are to ensure that wells and core holes will be plugged and sealed in a manner that will prevent the migration of injected fluids into or between USDWs, and to ensure compliance with the applicable requirements of the ADWR (Arizona Administrative Code [A.A.C.] R12-15-816 [Abandonment], and ADWR Well Abandonment Handbook) and the USEPA (40 Code of Federal Regulations [CFR] 146.10 [Plugging and Abandoning Class I-V Wells]).

E.2.3 Hydrogeologic Setting

The saturated geologic formations underlying the FCP site have been divided into three distinct water-bearing hydrostratigraphic units referred to as the Upper Basin Fill Unit (UBFU), Lower Basin Fill Unit (LBFU), and the Bedrock Oxide Unit. The UBFU and LBFU are separated by a thin, regionally extensive aquitard referred to as the Middle Fine-Grained Unit (MFGU). The injection and recovery wells will be completed in the Bedrock Oxide Unit, the uppermost zone of the bedrock complex underlying the FCP site. The injection zone extends from a point 40 feet below the top of the Bedrock Oxide Unit to the oxide/sulfide contact at the base of the Bedrock Oxide Unit. The uppermost 40 feet of the Bedrock Oxide Unit is excluded from injection and is referred to as the exclusion zone.

E.2.4 Overview of ISCR Operations

The ISCR area will be prepared for injection and recovery operations through a three-step process that includes: (a) the abandonment of core holes and existing wells (except Class III wells) within the active well field area and within 500 feet of the planned active ISCR well field area; (b) installation of injection, recovery, and observation wells as required; and (c) installation of ancillary facilities such as power and conveyance infrastructure.

The planned ISCR process involves injecting raffinate (approximately 99.5 percent water mixed with 0.5 percent sulfuric acid) through injection wells into the oxide zone of the bedrock beneath the site for the purposes of dissolving copper minerals from the ore body. The estimated injection zone is between approximately 500 feet below ground surface (bgs) to 1,185 feet bgs. The resulting copper-bearing solution will be pumped by recovery wells to the surface where copper will be removed from the

solution in a solvent extraction electro winning (SX/EW) plant. The barren solution from the SX/EW plant will be re-acidified and re-injected back into the oxide zone.

Once copper concentration in the solution declines to a predetermined level, well closure will begin. Closure will consist of circulation of fresh water through the wells until groundwater has been restored to a quality that meets criteria specified in Aquifer Protection Permit (APP) No. P-101704 (the APP) and the UIC Permit. Depending on copper content, solutions produced during closure operations will be withdrawn through the recovery wells and conveyed to the SX/EW plant for processing or neutralized and pumped to one of the water impoundments.

Injection will be discontinued and the ISCR wells undergoing closure will be provisionally considered closed once constituent concentrations in groundwater pumped from the injection zone meet the closure criteria specified in the APP and the UIC Permit. Not more than 2 years following the provisional closure of an ISCR well, the well will be abandoned in accordance with procedures outlined in this plan and requirements set forth in the UIC Permit and the APP.

At the conclusion of PTF operations, proposed Class III wells within the AOR will remain open for use in monitoring groundwater conditions until ADEQ and USEPA give approval to plug and abandon the wells. FCP ISCR Class III wells will not be plugged and abandoned until written authorization to do so has been received from both ADEQ and USEPA.

Post-closure monitoring at the point of compliance (POC) wells and supplemental monitoring wells will continue following completion of formation rinsing for the period of time specified in the APP and the UIC Permit. The POC wells will remain open for the period of time necessary to complete closure and post-closure monitoring specified in the APP and the UIC Permit.

E.2.5 Licenses, Notifications, and Approvals

E.2.5.1 Licensed Drillers

Abandonment procedures are described in this document and will only be performed by well drillers licensed by the ADWR pursuant to Arizona Revised Statutes § 45-595(B), or under the direction of such licensed well drillers.

E.2.5.2 Abandonment Notification and Authorization

Florence Copper will convey notice of intent to abandon a well or core hole to ADWR using Form 55-38 (*Notice of Intent to Abandon a Well)* approximately 30 days prior to the planned commencement of abandonment activities for a well or core hole. Form 55-38 will include information describing the location, type, and construction of the well or core hole, and the proposed plugging or abandonment method.

In addition, Florence Copper will convey notice of proposed abandonment of Class III and non-Class III wells and all core holes to the USEPA on a revised copy of Form 7520-19 (*Plugging and Abandonment Plan)* approximately 60 days prior to the planned abandonment. The form will include descriptions of

the proposed abandonment materials and methods of emplacement. Copies of Forms 55-38 and 7520-19 will be submitted to ADEQ concurrently with submittal to ADWR and USEPA.

Once ADWR has approved the abandonment method and materials identified on ADWR Form 55-38, ADWR will issue authorization to the driller to commence with the proposed abandonment. Authorization from ADWR will be in the form of a "well abandonment card" issued to the licensed driller. No well or core hole will be abandoned on the FCP site unless the driller has received a well abandonment card, issued by the Director of the ADWR, authorizing the abandonment of the specific well or core hole.

E.3 WELL AND CORE HOLE ABANDONMENT PROCEDURES

The standard abandonment procedure will be to completely fill the well or core hole with an appropriate sealing material, with some variation depending on the type, condition, and total depth of the well or core hole. Within the AOR, the sealing material will be Type V cement, or approved equivalent as defined in the UIC Permit. The condition and depth of each well or core hole varies significantly. Abandonment will be considered complete when all applicable sealing steps set forth below have been completed or have been determined to be unnecessary.

E.3.1 Well or Core Hole Preparation

The following tasks will be performed to prepare each well or core hole for effective sealing.

a. Locate and Inspect Well or Core Hole: The well or core hole will be located using available survey coordinates. The condition and location of the well or core hole will be recorded. If the well or core hole is not visible from the surface, the area will be excavated to locate the collar of the core hole or expose the surface casing of the well.

b. Move in Workover Rig: A workover rig capable of performing the required abandonment operations at the required depths will be moved in and set up over the well or core hole.

c. Equipment Removal: All pumps, tubing, wiring, and ancillary equipment within the well will be removed prior to abandonment of the well. No equipment exists within the core holes.

d. Perforations: If records demonstrate that a well annulus is inadequately sealed and its casing is not removed, the casing will be perforated to allow installation of cement grout in the annulus. If necessary and the casing extends that distance, perforations will extend from at least 20 feet below the bedrock-LBFU contact to at least 20 feet above the contact; from at least 20 feet below the base of the MFGU to at least 20 feet above the top of the MFGU; and from 25 feet bgs to 5 feet bgs.

e. Cleaning: Wells and core holes will be cleaned out, if necessary, to a depth of at least 100 feet below the bedrock-LBFU contact to enable proper placement of cement seals. This will be accomplished by installing a work string of tubing and circulating fluids, or drilling, or performing other remedial work as required to clean the well or core hole to the required depth.

f. Equalization of Wellbore Fluids: After cleaning the well or core hole, wellbore fluids (bentonite mud) may be circulated and treated as necessary to achieve equilibrium and stabilize the hole.

E.3.2 Equipment and Materials

The following material and equipment will be used in sealing wells and core holes according to the procedure described below if required to make proper seals.

a. Cement Grout: All cement grout will consist of Type V cement, or equivalent approved in accordance with the UIC Permit.

b. Mechanical Plugs: A mechanical bridge plug will be set at the base of the interval to be cemented off if it is not at the bottom of the well or core hole. Alternately, the well or core hole may be filled with suitable formation stabilizer (i.e., mixture of sand and pea gravel) to support the cement seal during placement. This will prevent migration cement below the interval to be cemented and sealed.

c. Cement Plugs: Cement plugs will consist of Type V cement grout or equivalent approved in accordance with the UIC Permit.

d. Cement Retainer: If cement grout is to be installed in the annulus behind perforated casing, a cement retainer will be set above the top perforation prior to pumping cement grout into the perforated interval that has been isolated by the cement retainer.

e. Work String: A work string of small diameter pipe or tubing (tremie pipe) will be used for the placement of cement grout and plugs.

E.3.3 General Procedure for Sealing Wells and Core Holes

The following procedure will be used to seal each well or core hole:

a. If the surface casing is loose at ground surface, an attempt will be made to remove it. If removal of the casing is not feasible, it will be left in the hole and perforated as needed to allow an annular seal to be placed to a depth of 25 feet bgs. In areas of agricultural use, the surface casing will be cut at least 5 feet bgs and removed.

b. A tremie pipe will be used to place Type V cement in the open well or core hole from the bottom of the hole to the top of the hole. Cement retainers, as described above, will be used to force cement grout into the annulus behind perforated intervals, as necessary.

c. If the hole has been obstructed, as much cement as possible will be placed from 100 feet below the LBFU-bedrock contact to the top of the hole.

d. The volume of Type V cement will be recorded and will not be less than the estimated volume of material required to fill each interval.

E.3.4 Procedures for Special Circumstances

The following procedures will be completed for special circumstances, as indicated.

a. Seal of Perched Aquifer: If cascading water is encountered during preparation for abandonment, the well casing in the target area will be cleaned or perforated, isolated with cement plugs, and Type V cement will be used to seal the annulus around the perched layer. Cement seals will be emplaced in four steps as follows:

1. In the area of the observed cascading water, existing casing perforations in the well will be cleaned to the point that they are open and will readily allow neat cement to pass, or new perforations will be cut that will allow neat cement to pass.
2. The well casing will be filled with Type V cement to a point at least 20 feet below the cascading zone and will be allowed to cure for a minimum of 12 hours.
3. A packer will be emplaced above the cascading zone.
4. Type V neat cement will be injected under pressure into the cascading zone until a volume of cement has been pumped that is equal to or greater than the combined volume of the well bore and the annular space within the isolated zone.

b. Injection Wells: Injection wells plugged and abandoned in accordance with the procedures specified above will be deemed to have been plugged and abandoned in accordance with the provisions of 40 CFR 146.10. Therefore, Florence Copper will comply with the procedures specified above to ensure that any deviation from the above procedures will not violate the provisions of 40 CFR 146.10.

E.3.5 Documentation and Reporting

Following completion of plugging and abandonment, reports will be prepared and filed with the respective agencies, as described below.

E.3.5.1 Reporting Responsibilities

The licensed driller or supervised designee will maintain a log of all abandonment activities. The log will be of sufficient detail that the driller will be able to complete all ADWR requirements and all abandonment reports required by USEPA. The driller will sign all ADWR abandonment forms. The authorized Florence Copper representative will sign all narrative abandonment reports submitted to ADWR and all abandonment reports to USEPA.

E.3.5.2 Reports to ADWR

The licensed driller will complete and sign a *Well Abandonment Completion Report* (ADWR Form 55-58) and submit it to ADWR within 30 days following abandonment of any well (including Class III wells) or core hole. Form 55-58 will update the information provided on ADWR Form 55-38 (*Notice of Intent to Abandon a Well)* including updated information on the treatment, materials, and methods used for abandoning the well or core hole. Florence Copper will complete and sign a *Well Owner's Notification of Abandonment* (ADWR Form 55-36) and submit it to ADWR within 30 days following abandonment.

E.3.5.3 Reports to USEPA

Within 60 days after plugging and abandoning a well or core hole or at the time of the next quarterly report due to the USEPA (whichever is less), Florence Copper will submit a report to the Regional Administrator of USEPA. If the quarterly report is due less than 15 days before plugging and abandonment is completed, then the report will be submitted within 60 days. The report will be certified as accurate by the licensed driller who performed the plugging and abandonment procedures.

The report will consist of either:

- A statement that the well or core hole was plugged and abandoned in accordance with the plan previously submitted to the Regional Administrator; or
- An updated version of the plan on Form 7520-19, specifying differences if the actual plugging or abandonment differed from the plan previously submitted.

The report will also include a summary of non-Class III wells and core holes abandoned and will include copies of all forms (Forms 55-38, 55-58, and 55-36) submitted to ADWR.

Completed copies of Form 7520-19 and schematic diagrams of wells and core holes within the AOR are provided as Exhibit E-1 to this Attachment.

E.3.5.4 Reports to ADEQ

Florence Copper will include in its quarterly APP monitoring report to ADEQ a summary noting the identification number of each well or core hole for which abandonment was completed during the reporting period, the date that the abandonment was completed, and the location of the well or core hole.

Florence Copper will also submit to ADEQ a copy of the plugging and abandonment report developed for submittal to USEPA.

E.3.5.5 Maintenance of Records

Copies of all completed and required abandonment report forms, plans, and narratives required by ADWR or USEPA will be maintained at the FCP site for inspection until closure is completed. After commencement of post-closure, the records will be stored by Florence Copper, subject to review by USEPA and ADEQ, until post-closure is completed.

E.4 PLUGGING AND ABANDONMENT FORMS

The planned ISCR well field area has been divided into resource blocks to aid in well field planning. Each resource block measures 500 feet by 500 feet and covers area of approximately 5.7 acres. Because resource characterization extended beyond the edge of the ISCR well field, the resource blocks also continue beyond the edge of the well field. The ISCR well field area boundary shown on Figures A-1 and A-2 (Attachment A of this Application) reflects the cutoff selected for copper recovery based on ore body characteristics. A total of 50 resource blocks fall either fully or partly inside the ISCR well field area. The proposed ISCR wells located within the ISCR well field are listed by resource block on Tables E-1 through E-50, provided in Exhibit E-1.

Each of the planned ISCR wells will be constructed based on site-specific geologic information developed during drilling and logging of the individual bore hole that the well will be constructed in. Specific information developed includes lithologic logging, caliper, gamma-ray, temperature, directional survey, and electrical logs. This information will be used to adjust the location of well seals, injection intervals, and eventually plugs based on this geologic information. By contrast, the well diagrams and plugging

and abandonment forms (USEPA Form 7520-19) included in Exhibit E-1 reflect preliminary well designs based on core hole data, with interpolation in areas between core holes. The core hole information was also used to develop the resource blocks shown on Attachment A, Figures A-1 and A-2 of this Application. Based on the information presently available, the planned ISCR wells to be constructed in each resource block will be of a similar depth and will feature a similar seal interval and injection zone interval. Consequently, one plugging and abandonment form was prepared for each resource block. Each plugging and abandonment form includes one well diagram for injection and recovery wells, and another for perimeter and observation wells for blocks that include both types of wells. Coordinates for each well location are provided in tabular format (Tables E-1 through E-50) with each plugging and abandonment form (Exhibit E-1). Tables E-1 through E-50 include well information for a total of 1,757 injection and recovery wells, 87 perimeter wells, and 44 observation wells.

Corrective action will be taken to prevent the migration of injected fluids between or into USDWs within or adjacent to the AOR. Corrective action includes plugging and abandonment of all wells and core holes within the AOR, with the exception of Class III wells, prior to placing an injection well into operation within 500 feet of the well or core hole. The wells and core holes will be plugged and abandoned in accordance with this Plugging and Abandonment Plan. All non-Class III wells currently existing within the AOR, and which will be plugged and abandoned prior to injection within 500 feet, are listed in Table A-7. Plugging and abandonment forms (USEPA Form 7520-19) for each of the wells listed in Table A-7 are included in Exhibit E-2. All open core holes currently existing within the AOR and which will be plugged and abandoned prior to injection within 500 feet are listed in Table A-8. Plugging and abandonment forms (USEPA Form 7520-19) for each of the core holes listed in Table A-8 are included in Exhibit E-3. Plugging and abandonment forms (USEPA Form 7520-19) for the BHP Class III wells listed in Table A-6 are included in Exhibit E-4.

E.5 PLUGGING AND ABANDONMENT COST ESTIMATE

A cost estimate for plugging and abandonment is included with the estimated closure and post-closure costs provided in Attachment F of this Application.

EXHIBIT E-1

Form 7520-19, Schematic Diagrams of Planned Class III ISCR Wells by Resource Block

OMB No. 2040-0042 Approval Expires 4/30/2022

United States Environmental Protection Agency

WELL REWORK RECORD, PLUGGING AND ABANDONMENT PLAN, OR PLUGGING AND ABANDONMENT AFFIDAVIT

Name and Address, Phone Number and/or Email of Permittee

Florence Copper Project
1575 W Hunt Hwy,
Florence, AZ 85132

Permit or EPA ID Number	API Number	Full Well Name
R9UIC-AZ3-FY11-1		Block 19 Wells - See Attached Table E-1

State	County
Arizona	Pinal

Locate well in two directions from nearest lines of quarter section and drilling unit

Surface Location

SW 1/4 of NW 1/4 of Section 28 Township 4S Range 9E

_____ ft. from (N/S) _____ Line of quarter section

_____ ft. from (E/W) _____ Line of quarter section.

Latitude 33.053291

Longitude -111.435439

See Attached Table for Individual Well Coordinates.

Well Class	Timing of Action (pick one)	Type of Action (pick one)
☐ Class I ☐ Class II ☑ Class III ☐ Class V	☑ Notice Prior to Work Date Expected to Commence January 2027 ☐ Report After Work Date Work Ended	☐ Well Rework ☑ Plugging and Abandonment ☐ Conversion to a Non-Injection Well

Provide a narrative description of the work planned to be performed, or that was performed. Use additional pages as necessary. See instructions.

This plugging and abandonment applies to wells Class III wells to be constructed in block 19. There are 11 Class III multi-use injection/ recovery wells, 1 dedicated Class III observation, and 3 Class III perimeter wells planned for construction in this block. The injection and recovery wells will be of uniform design, and will be used for injection and recovery on an alternate basis. Some of the injection and recovery wells will be used as perimeter and observation wells prior to well field build-out. The dedicated perimeter observation well will have a design and depth similar to the injection and recovery wells, but will not have a segmented well screen.

The work performed includes plugging and abandonment of the Class III wells in resource block 19. Plugging and abandonment will be accomplished following procedures defined in Attachment E of the application. Plugging and abandonment details are shown on the attached Figures E-1a and E-1b.

Certification

I certify under the penalty of law that I have personally examined and am familiar with the information submitted in this document and all attachments and that, based on my inquiry of those individuals immediately responsible for obtaining the information, I believe that the information is true, accurate, and complete. I am aware that there are significant penalties for submitting false information, including the possibliity of fine and imprisonment. (Ref. 40 CFR § 144.32)

Name and Official Title *(Please type or print)*	Signature	Date Signed
Dan Johnson, VP - General Manager		10/3/2019

PROPOSED DESIGN
INJECTION AND RECOVERY WELL

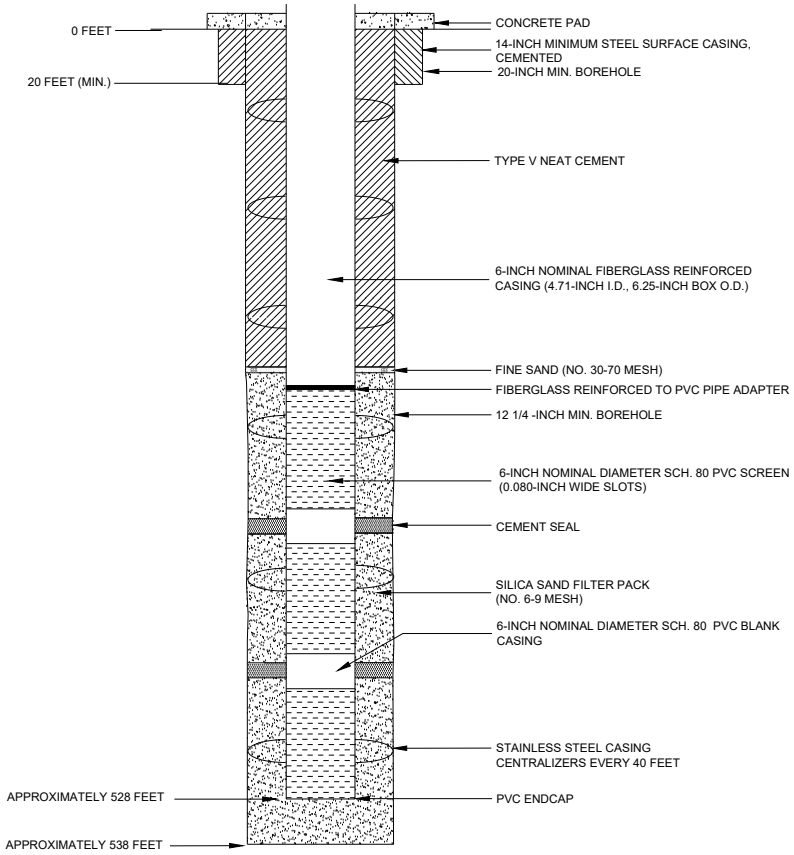

PROPOSED PLUGGING AND
ABANDONMENT
INJECTION AND RECOVERY WELL

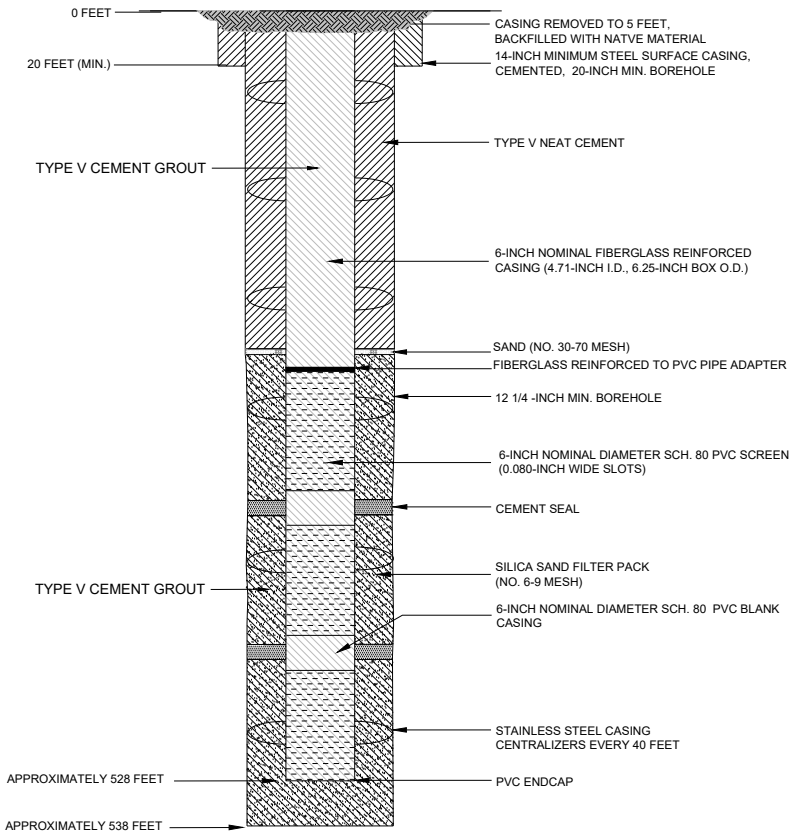

NOTES

1. WELL DESIGN DETAILS ARE BASED ON CORE HOLE AND WELL LOG RECORDS.

HALEY ALDRICH

FLORENCE COPPER, INC.
FLORENCE, ARIZONA

ABANDONMENT SCHEMATIC
RESOURCE BLOCK 19
TYPICAL INJECTION AND
RECOVERY WELL

SCALE: AS SHOWN
JULY 2019

FIGURE E-1a

PROPOSED DESIGN
OBSERVATION/PERIMETER WELL

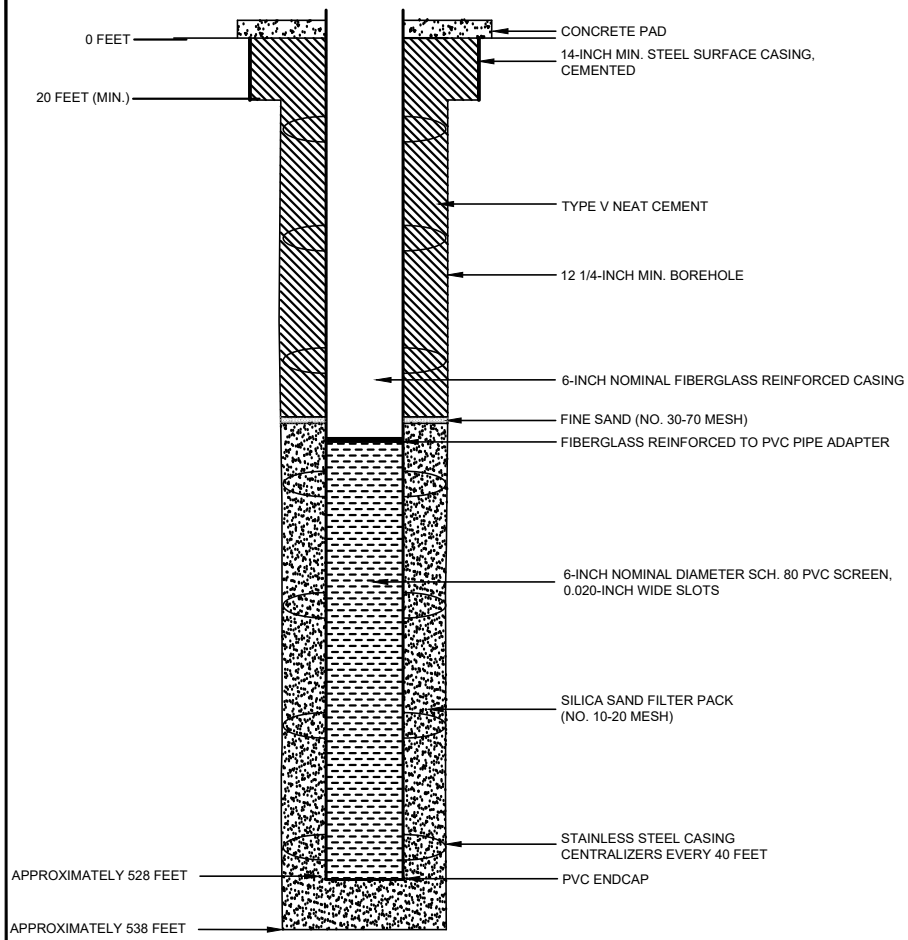

PROPOSED PLUGGING AND
ABANDONMENT
OBSERVATION/PERIMETER WELL

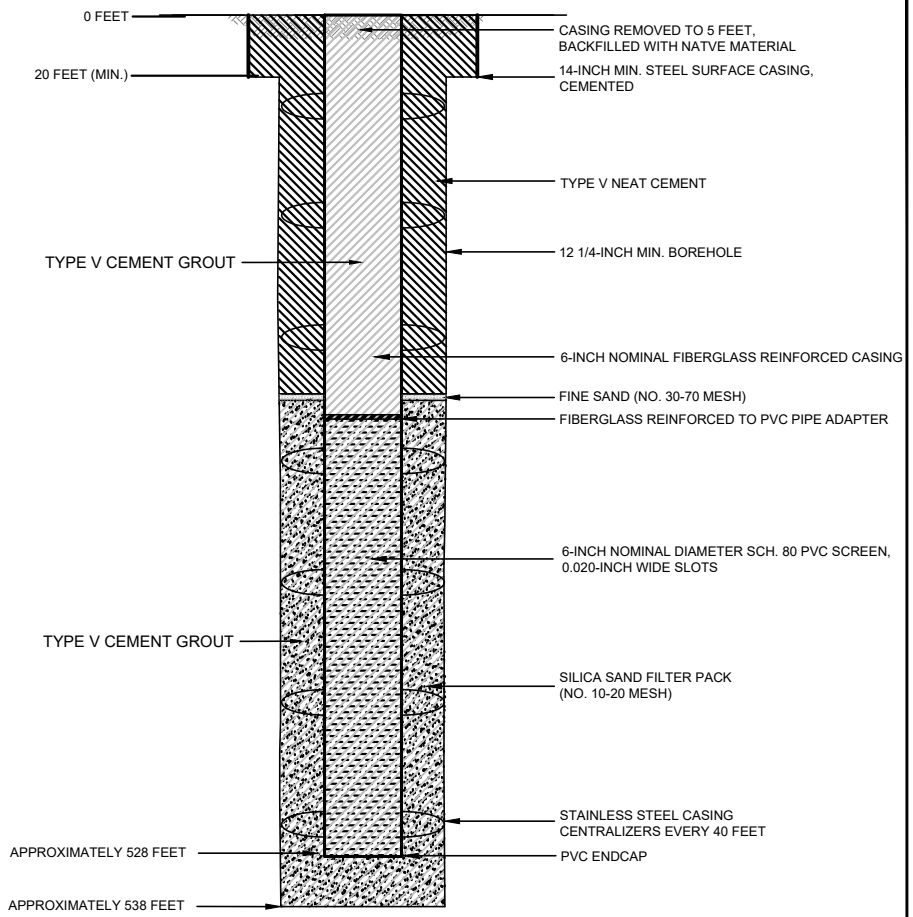

NOTES

1. WELL DESIGN DETAILS ARE BASED ON CORE HOLE AND WELL LOG RECORDS.

HALEY ALDRICH

FLORENCE COPPER, INC.
FLORENCE, ARIZONA

ABANDONMENT SCHEMATIC
RESOURCE BLOCK 19
OBSERVATION/PERIMETER WELL

JULY 2019
SCALE: AS SHOWN

FIGURE E-1b

TABLE E-1
WELLS WITHIN RESOURCE BLOCK 19
FLORENCE COPPER PROJECT
FLORENCE, ARIZONA

Well Number	Easting	Northing	Resource Block	Depth to Top of Bedrock (ft bgs)	Depth to Top of Injection Zone (ft bgs)	Depth to Bottom of Injection Zone (ft bgs)
566	847412	747121	19	336	376	528
567	847483	747192	19	336	376	528
583	847341	747050	19	336	376	528
873	847341	747121	19	336	376	528
874	847341	747192	19	336	376	528
875	847270	747121	19	336	376	528
921	847389	747205	19	336	376	528
922	847289	747205	19	336	376	528
923	847339	747255	19	336	376	528
569	847483	747121	19	336	376	528
587	847412	747050	19	336	376	528
O01	847408	747389	19	336	376	528
P01	847337	747319	19	336	376	528
P02	847479	747319	19	336	376	528
P03	847695	747333	19	336	376	528

Notes:

ft bgs = feet below ground surface

OMB No. 2040-0042 Approval Expires 4/30/2022

United States Environmental Protection Agency

WELL REWORK RECORD, PLUGGING AND ABANDONMENT PLAN, OR PLUGGING AND ABANDONMENT AFFIDAVIT

Name and Address, Phone Number and/or Email of Permittee

Florence Copper Project
1575 W Hunt Hwy,
Florence, AZ 85132

Permit or EPA ID Number	API Number	Full Well Name
R9UIC-AZ3-FY11-1		Block 20 Wells - See Attached Table E-2

State	County
Arizona	Pinal

Locate well in two directions from nearest lines of quarter section and drilling unit

Surface Location

NE 1/4 of SW 1/4 of Section 28 Township 4S Range 9E

_____ ft. from (N/S) _____ Line of quarter section

_____ ft. from (E/W) _____ Line of quarter section.

Latitude 33.052763

Longitude -111.433440

See Attached Table for Individual Well Coordinates.

Well Class	Timing of Action (pick one)	Type of Action (pick one)
☐ Class I ☐ Class II ☑ Class III ☐ Class V	☑ Notice Prior to Work Date Expected to Commence January 2027 ☐ Report After Work Date Work Ended	☐ Well Rework ☑ Plugging and Abandonment ☐ Conversion to a Non-Injection Well

Provide a narrative description of the work planned to be performed, or that was performed. Use additional pages as necessary. See instructions.

This plugging and abandonment applies to wells Class III wells to be constructed in block 20. There are 6 Class III multi-use injection/ recovery wells, 2 dedicated Class III observation, and 3 Class III perimeter wells planned for construction in this block. The injection and recovery wells will be of uniform design, and will be used for injection and recovery on an alternate basis. Some of the injection and recovery wells will be used as perimeter and observation wells prior to well field build-out. The dedicated perimeter observation well will have a design and depth similar to the injection and recovery wells, but will not have a segmented well screen.

The work performed includes plugging and abandonment of the Class III wells in resource block 20. Plugging and abandonment will be accomplished following procedures defined in Attachment E of the application. Plugging and abandonment details are shown on the attached Figures E-2a and E-2b.

Certification

I certify under the penalty of law that I have personally examined and am familiar with the information submitted in this document and all attachments and that, based on my inquiry of those individuals immediately responsible for obtaining the information, I believe that the information is true, accurate, and complete. I am aware that there are significant penalties for submitting false information, including the possibliity of fine and imprisonment. (Ref. 40 CFR § 144.32)

Name and Official Title *(Please type or print)*	Signature	Date Signed
Dan Johnson, VP - General Manager		10/3/2019

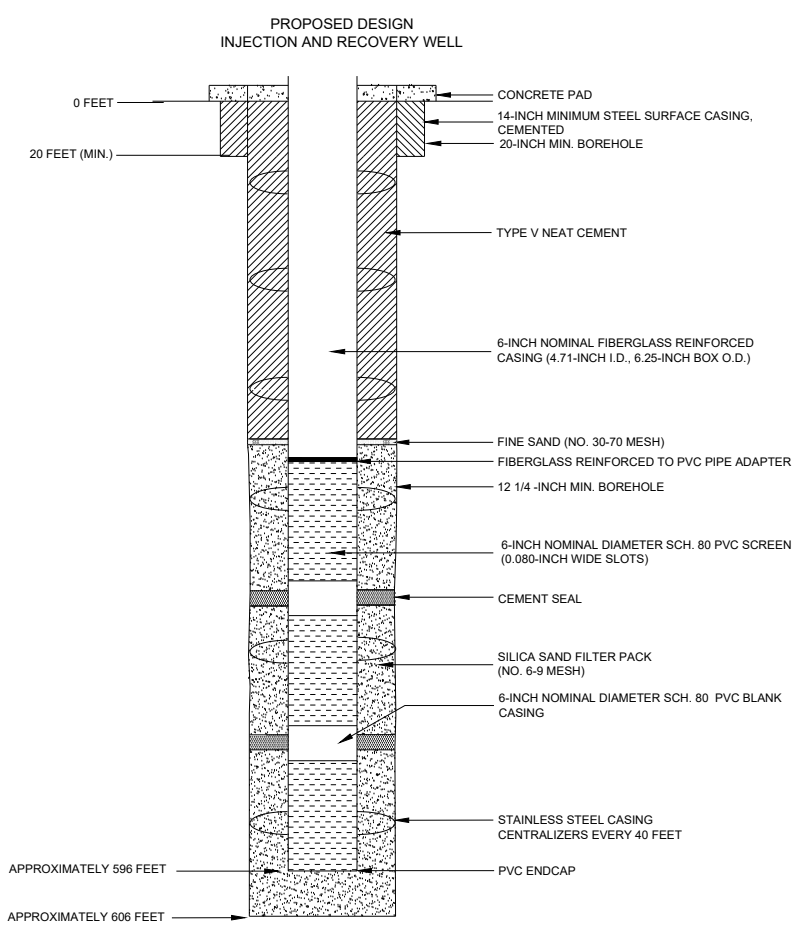

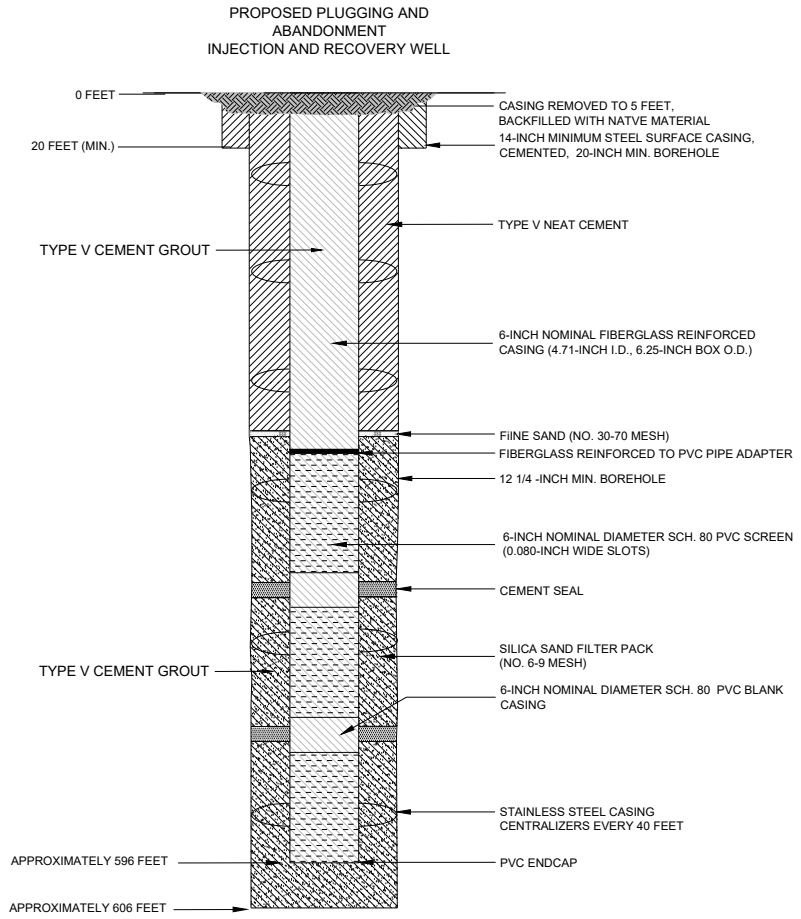

NOTES

1. WELL DESIGN DETAILS ARE BASED ON CORE HOLE AND WELL LOG RECORDS.

HALEY ALDRICH

FLORENCE COPPER, INC.
FLORENCE, ARIZONA

ABANDONMENT SCHEMATIC
RESOURCE BLOCK 20
TYPICAL INJECTION AND RECOVERY WELL

SCALE: AS SHOWN
JULY 2019

FIGURE E-2a

Saved by: MNICHOLLS Printed: 7/25/2019 7:20 PM Sheet: HA-FIG-A-L(2)
\\HALEYALDRICH.COM\SHARE\PHX_COMMON\PROJECTS\FLORENCE COPPER\132473 FLORENCE GROUNDWATER PERMITTING\CAD\132473_000-OBSERVATION_WELL_CONSTRUCTION DIAGRAM.DWG

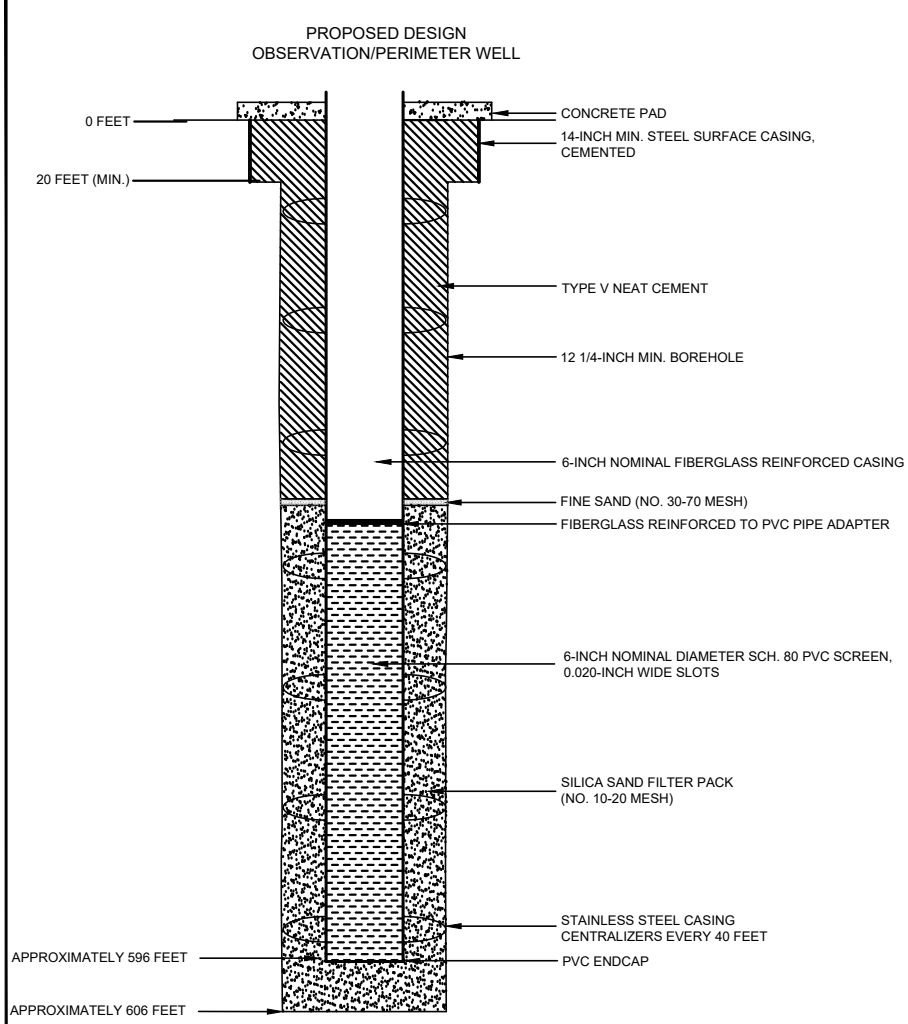

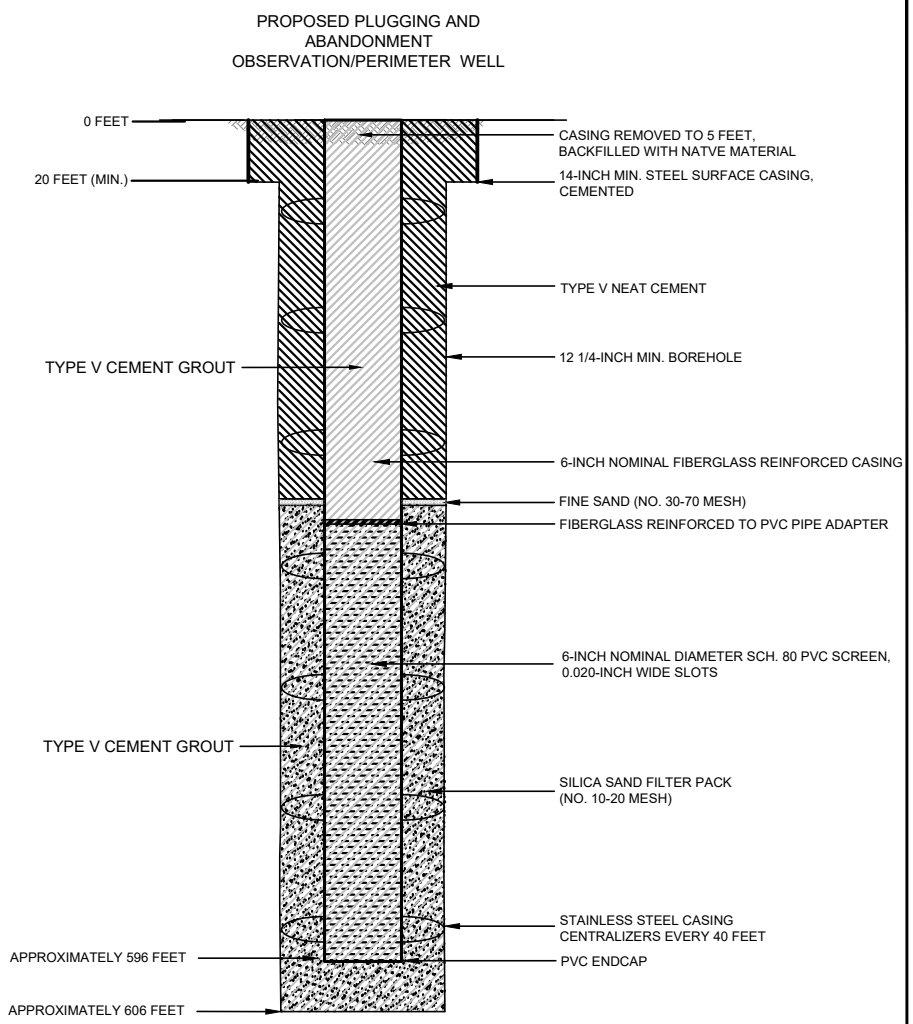

NOTES

1. WELL DESIGN DETAILS ARE BASED ON CORE HOLE AND WELL LOG RECORDS.

HALEY ALDRICH

FLORENCE COPPER, INC.
FLORENCE, ARIZONA

ABANDONMENT SCHEMATIC
RESOURCE BLOCK 20
OBSERVATION/PERIMETER WELL

JULY 2019
SCALE: AS SHOWN

FIGURE E-2b

TABLE E-2
WELLS WITHIN RESOURCE BLOCK 20
FLORENCE COPPER PROJECT
FLORENCE, ARIZONA

Well Number	Easting	Northing	Resource Block	Depth to Top of Bedrock (ft bgs)	Depth to Top of Injection Zone (ft bgs)	Depth to Bottom of Injection Zone (ft bgs)
632	848119	747050	20	351	391	596
602	847978	747121	20	351	391	596
605	848190	747121	20	351	391	596
606	848048	747121	20	351	391	596
607	848119	747121	20	351	391	596
633	848048	747050	20	351	391	596
O02	847765	747333	20	351	391	596
O03	847978	747263	20	351	391	596
P05	847907	747192	20	351	391	596
P06	848048	747192	20	351	391	596
P07	848190	747192	20	351	391	596

Notes:

ft bgs = feet below ground surface

OMB No. 2040-0042 Approval Expires 4/30/2022

United States Environmental Protection Agency

WELL REWORK RECORD, PLUGGING AND ABANDONMENT PLAN, OR PLUGGING AND ABANDONMENT AFFIDAVIT

Name and Address, Phone Number and/or Email of Permittee

Florence Copper Project
1575 W Hunt Hwy,
Florence, AZ 85132

Permit or EPA ID Number	API Number	Full Well Name
R9UIC-AZ3-FY11-1		Block 21 Wells - See Attached Table E-3

State	County
Arizona	Pinal

Locate well in two directions from nearest lines of quarter section and drilling unit

Surface Location

NE 1/4 of SW 1/4 of Section 28 Township 4S Range 9E

_____ ft. from (N/S) _____ Line of quarter section

_____ ft. from (E/W) _____ Line of quarter section.

Latitude 33.052742

Longitude -111.431160

See Attached Table for Individual Well Coordinates.

Well Class	Timing of Action (pick one)	Type of Action (pick one)
☐ Class I ☐ Class II ☑ Class III ☐ Class V	☑ Notice Prior to Work Date Expected to Commence January 2027 ☐ Report After Work Date Work Ended	☐ Well Rework ☑ Plugging and Abandonment ☐ Conversion to a Non-Injection Well

Provide a narrative description of the work planned to be performed, or that was performed. Use additional pages as necessary. See instructions.

This plugging and abandonment applies to wells Class III wells to be constructed in block 21. There are 6 Class III multi-use injection/ recovery wells, 1 dedicated Class III observation, and 3 Class III perimeter wells planned for construction in this block. The injection and recovery wells will be of uniform design, and will be used for injection and recovery on an alternate basis. Some of the injection and recovery wells will be used as perimeter and observation wells prior to well field build-out. The dedicated perimeter observation well will have a design and depth similar to the injection and recovery wells, but will not have a segmented well screen.

The work performed includes plugging and abandonment of the Class III wells in resource block 21. Plugging and abandonment will be accomplished following procedures defined in Attachment E of the application. Plugging and abandonment details are shown on the attached Figures E-3a and E-3b.

Certification

I certify under the penalty of law that I have personally examined and am familiar with the information submitted in this document and all attachments and that, based on my inquiry of those individuals immediately responsible for obtaining the information, I believe that the information is true, accurate, and complete. I am aware that there are significant penalties for submitting false information, including the possibliity of fine and imprisonment. (Ref. 40 CFR § 144.32)

Name and Official Title *(Please type or print)*	Signature	Date Signed
Dan Johnson, VP - General Manager		10/3/2019

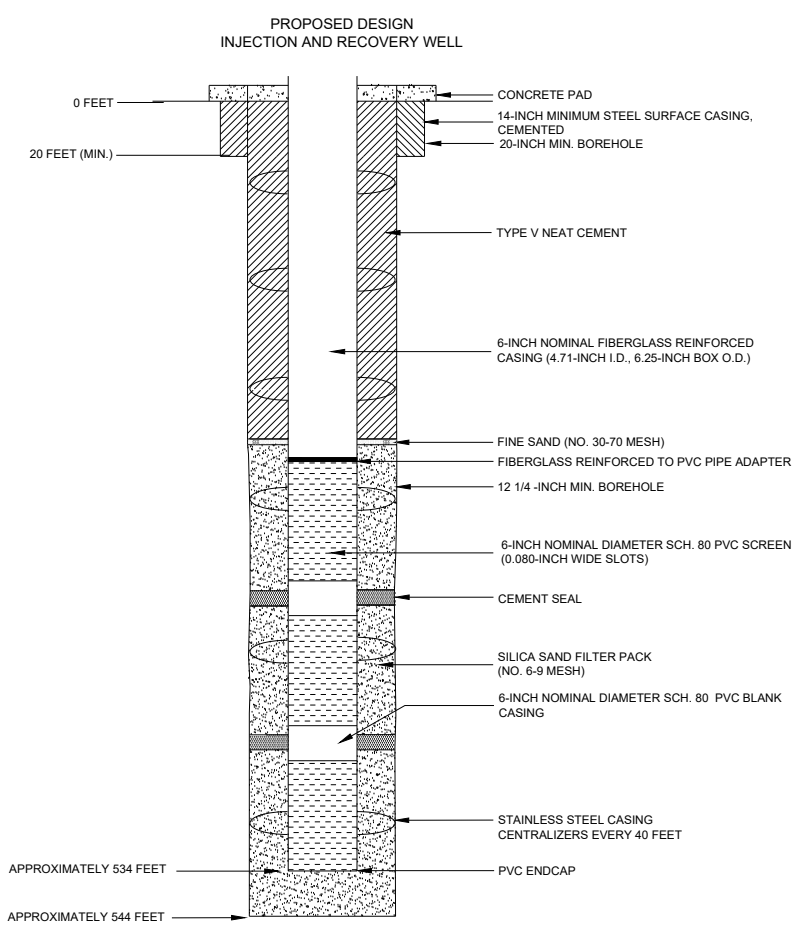

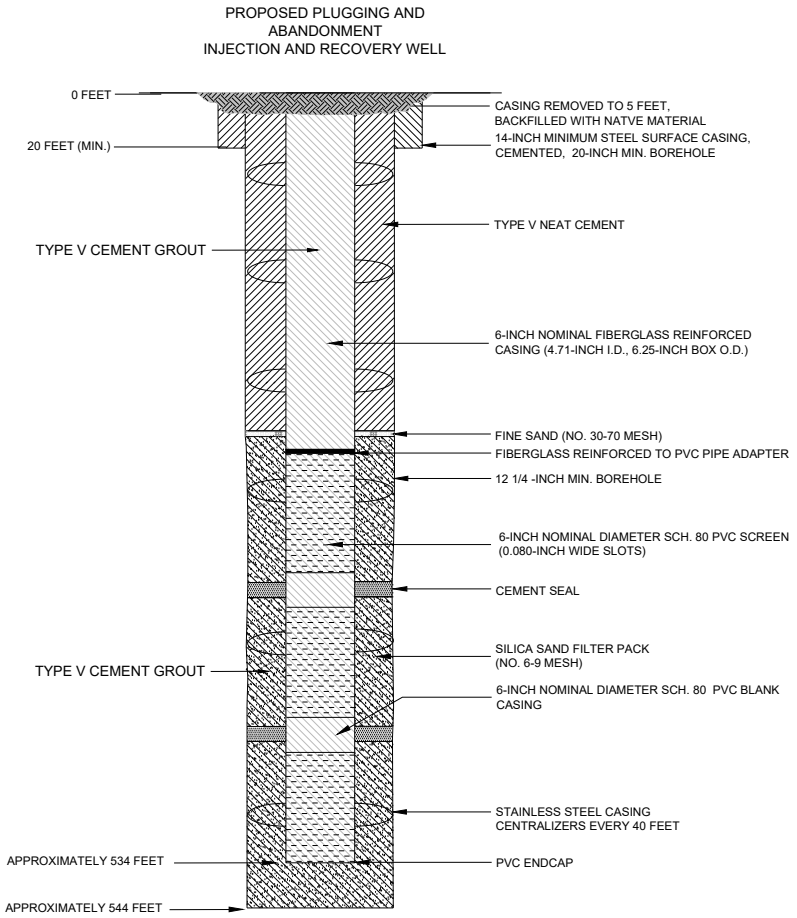

NOTES

1. WELL DESIGN DETAILS ARE BASED ON CORE HOLE AND WELL LOG RECORDS.

HALEY ALDRICH

FLORENCE COPPER, INC.
FLORENCE, ARIZONA

ABANDONMENT SCHEMATIC
RESOURCE BLOCK 21
TYPICAL INJECTION AND RECOVERY WELL

SCALE: AS SHOWN
JULY 2019

FIGURE E-3a

Saved by: MNICHOLLS Printed: 7/25/2019 7:20 PM Sheet: HA-FIG-A-L(2)
\\HALEYALDRICH.COM\SHARE\PHX_COMMON\PROJECTS\FLORENCE COPPER\132473 FLORENCE GROUNDWATER PERMITTING\CAD\132473_000-OBSERVATION_WELL_CONSTRUCTION DIAGRAM.DWG

PROPOSED DESIGN
OBSERVATION/PERIMETER WELL

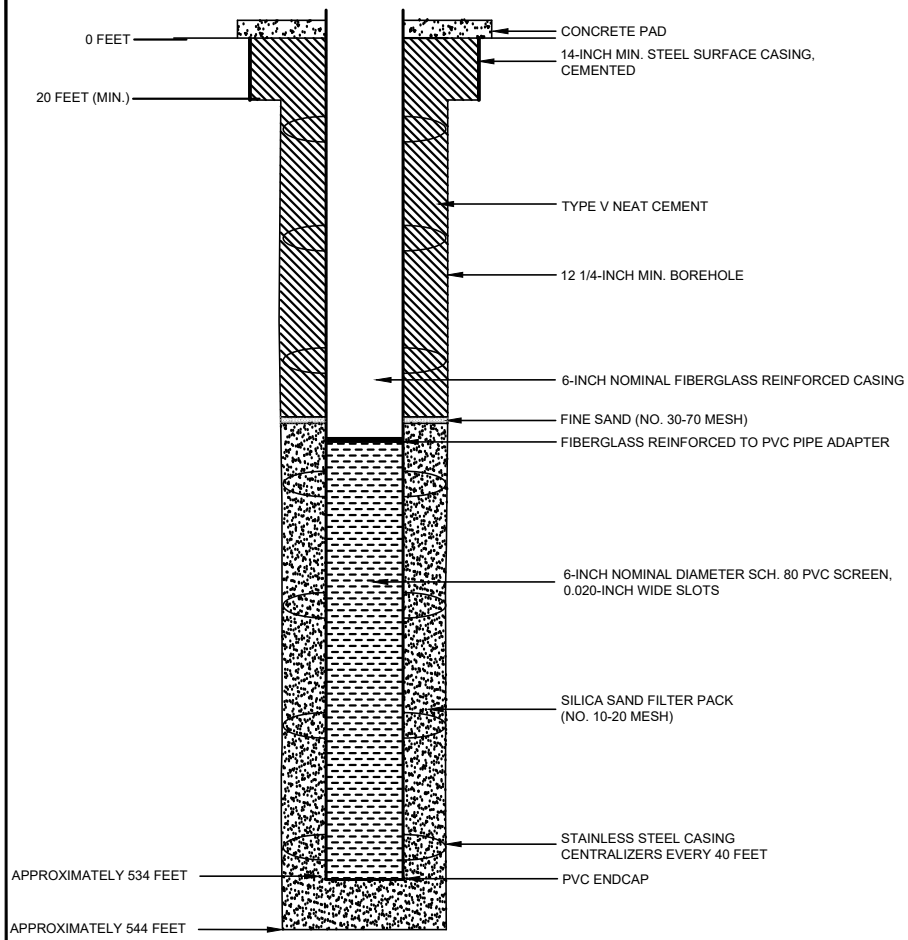

PROPOSED PLUGGING AND
ABANDONMENT
OBSERVATION/PERIMETER WELL

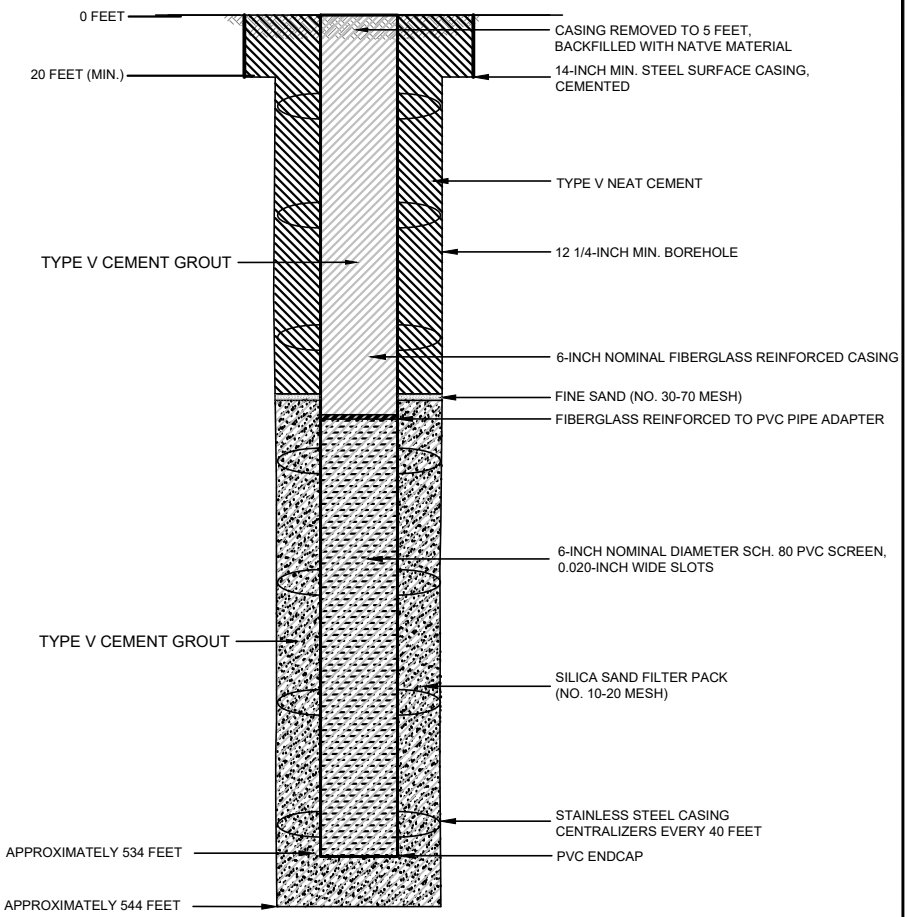

NOTES

1. WELL DESIGN DETAILS ARE BASED ON CORE HOLE AND WELL LOG RECORDS.

HALEY ALDRICH

FLORENCE COPPER, INC.
FLORENCE, ARIZONA

ABANDONMENT SCHEMATIC
RESOURCE BLOCK 21
OBSERVATION/PERIMETER WELL

JULY 2019
SCALE: AS SHOWN

FIGURE E-3b

TABLE E-3
WELLS WITHIN RESOURCE BLOCK 21
FLORENCE COPPER PROJECT
FLORENCE, ARIZONA

Well Number	Easting	Northing	Resource Block	Depth to Top of Bedrock (ft bgs)	Depth to Top of Injection Zone (ft bgs)	Depth to Bottom of Injection Zone (ft bgs)
11	848826	747050	21	344	384	534
6	848755	747051	21	344	384	534
8	848897	747121	21	344	384	534
10	848826	747121	21	344	384	534
132	848754	747121	21	344	384	534
133	848684	747121	21	344	384	534
O05	848755	747263	21	344	384	534
P09	848685	747192	21	344	384	534
P10	848826	747192	21	344	384	534
P11	848967	747192	21	344	384	534

Notes:

ft bgs = feet below ground surface

OMB No. 2040-0042 Approval Expires 4/30/2022

United States Environmental Protection Agency

WELL REWORK RECORD, PLUGGING AND ABANDONMENT PLAN, OR PLUGGING AND ABANDONMENT AFFIDAVIT

Name and Address, Phone Number and/or Email of Permittee

Florence Copper Project
1575 W Hunt Hwy,
Florence, AZ 85132

Permit or EPA ID Number	API Number	Full Well Name
R9UIC-AZ3-FY11-1		Block 22 Wells - See Attached Table E-4

State	County
Arizona	Pinal

Locate well in two directions from nearest lines of quarter section and drilling unit

Surface Location

NE 1/4 of SE 1/4 of Section 28 Township 4S Range 9E

_____ ft. from (N/S) _____ Line of quarter section

_____ ft. from (E/W) _____ Line of quarter section.

Latitude 33.052757

Longitude -111.428766

See Attached Table for Individual Well Coordinates.

Well Class	Timing of Action (pick one)	Type of Action (pick one)
☐ Class I ☐ Class II ☑ Class III ☐ Class V	☑ Notice Prior to Work Date Expected to Commence January 2027 ☐ Report After Work Date Work Ended	☐ Well Rework ☑ Plugging and Abandonment ☐ Conversion to a Non-Injection Well

Provide a narrative description of the work planned to be performed, or that was performed. Use additional pages as necessary. See instructions.

This plugging and abandonment applies to wells Class III wells to be constructed in block 22. There are 4 Class III multi-use injection/ recovery wells, 2 dedicated Class III observation, and 3 Class III perimeter wells planned for construction in this block. The injection and recovery wells will be of uniform design, and will be used for injection and recovery on an alternate basis. Some of the injection and recovery wells will be used as perimeter and observation wells prior to well field build-out. The dedicated perimeter observation well will have a design and depth similar to the injection and recovery wells, but will not have a segmented well screen.

The work performed includes plugging and abandonment of the Class III wells in resource block 22. Plugging and abandonment will be accomplished following procedures defined in Attachment E of the application. Plugging and abandonment details are shown on the attached Figures E-4a and E-4b.

Certification

I certify under the penalty of law that I have personally examined and am familiar with the information submitted in this document and all attachments and that, based on my inquiry of those individuals immediately responsible for obtaining the information, I believe that the information is true, accurate, and complete. I am aware that there are significant penalties for submitting false information, including the possibliity of fine and imprisonment. (Ref. 40 CFR § 144.32)

Name and Official Title *(Please type or print)*	Signature	Date Signed
Dan Johnson, VP - General Manager		10/3/2019

PROPOSED DESIGN
INJECTION AND RECOVERY WELL

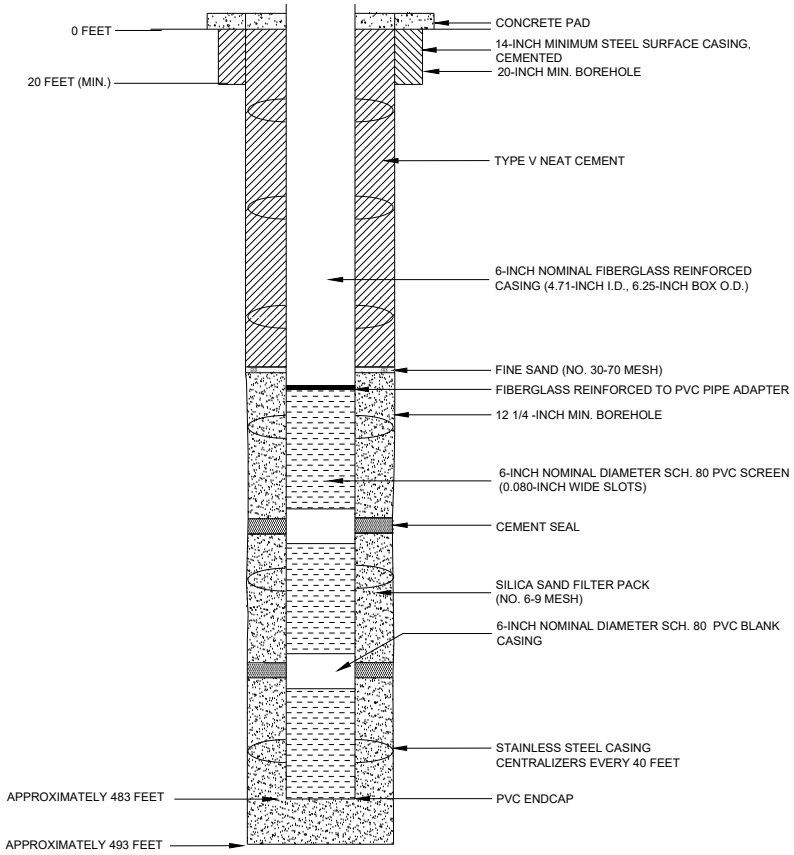

PROPOSED PLUGGING AND
ABANDONMENT
INJECTION AND RECOVERY WELL

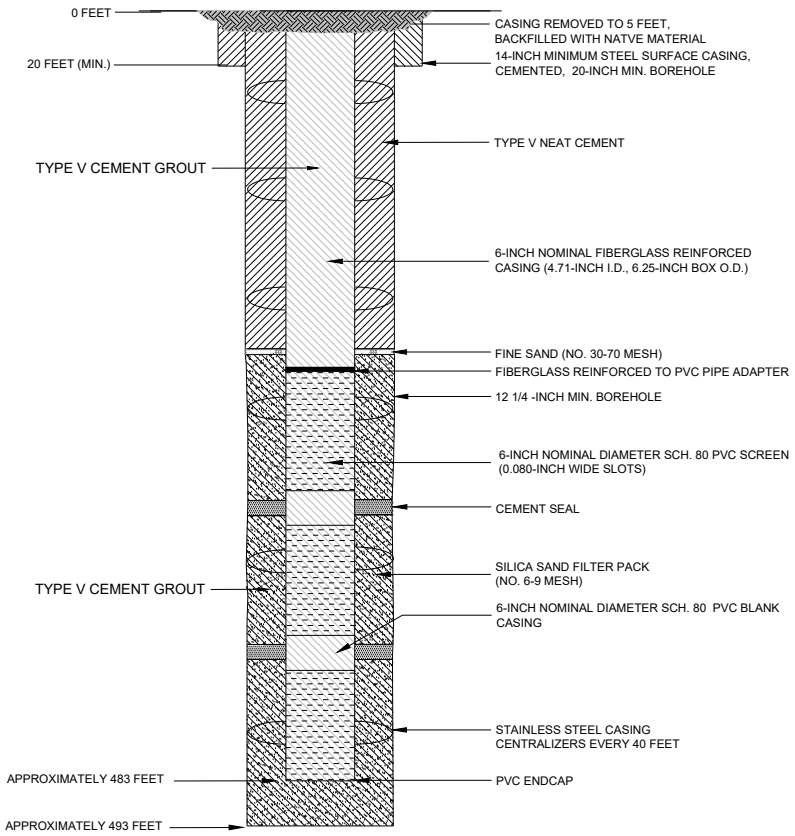

NOTES

1. WELL DESIGN DETAILS ARE BASED ON CORE HOLE AND WELL LOG RECORDS.

HALEY ALDRICH

FLORENCE COPPER, INC.
FLORENCE, ARIZONA

ABANDONMENT SCHEMATIC
RESOURCE BLOCK 22
TYPICAL INJECTION AND
RECOVERY WELL

SCALE: AS SHOWN
JULY 2019

FIGURE E-4

Saved by: MNICHOLLS Printed: 7/25/2019 7:20 PM Sheet: HA-FIG-A-L(2)
\\HALEYALDRICH.COM\SHARE\PHX_COMMON\PROJECTS\FLORENCE COPPER\132473 FLORENCE GROUNDWATER PERMITTING\CAD\132473_000-OBSERVATION_WELL_CONSTRUCTION DIAGRAM.DWG

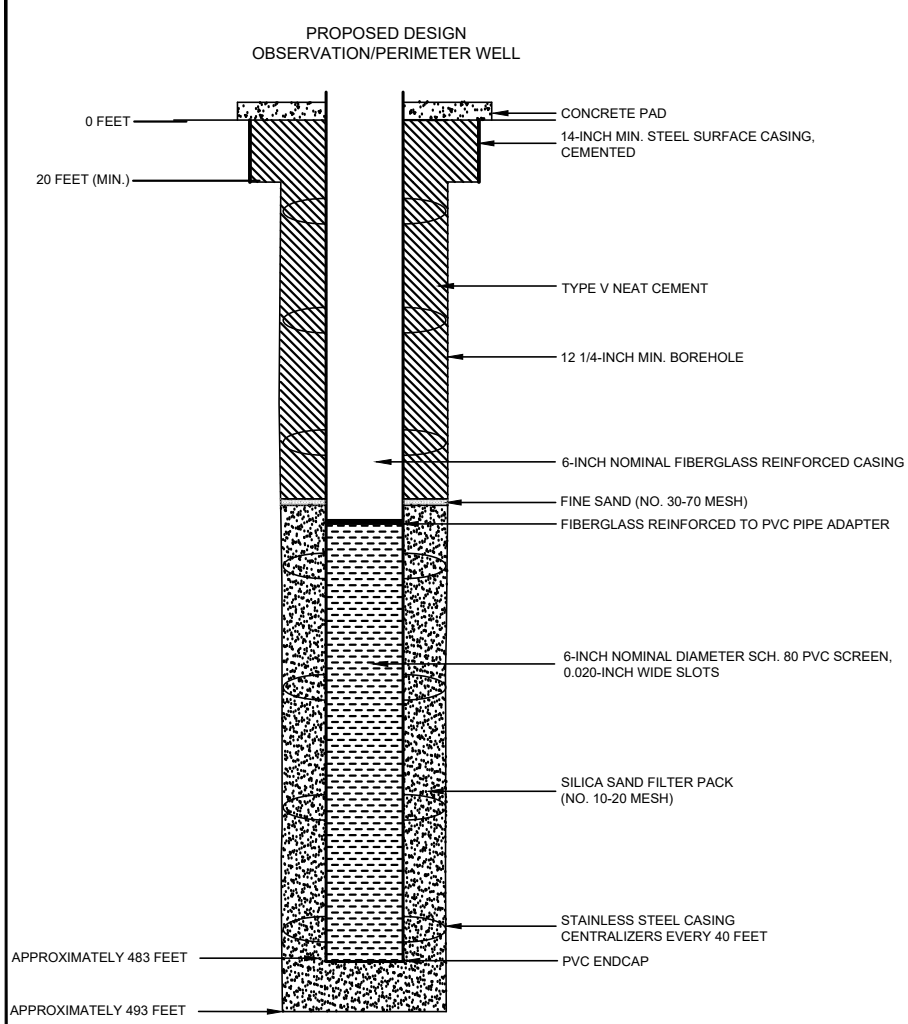

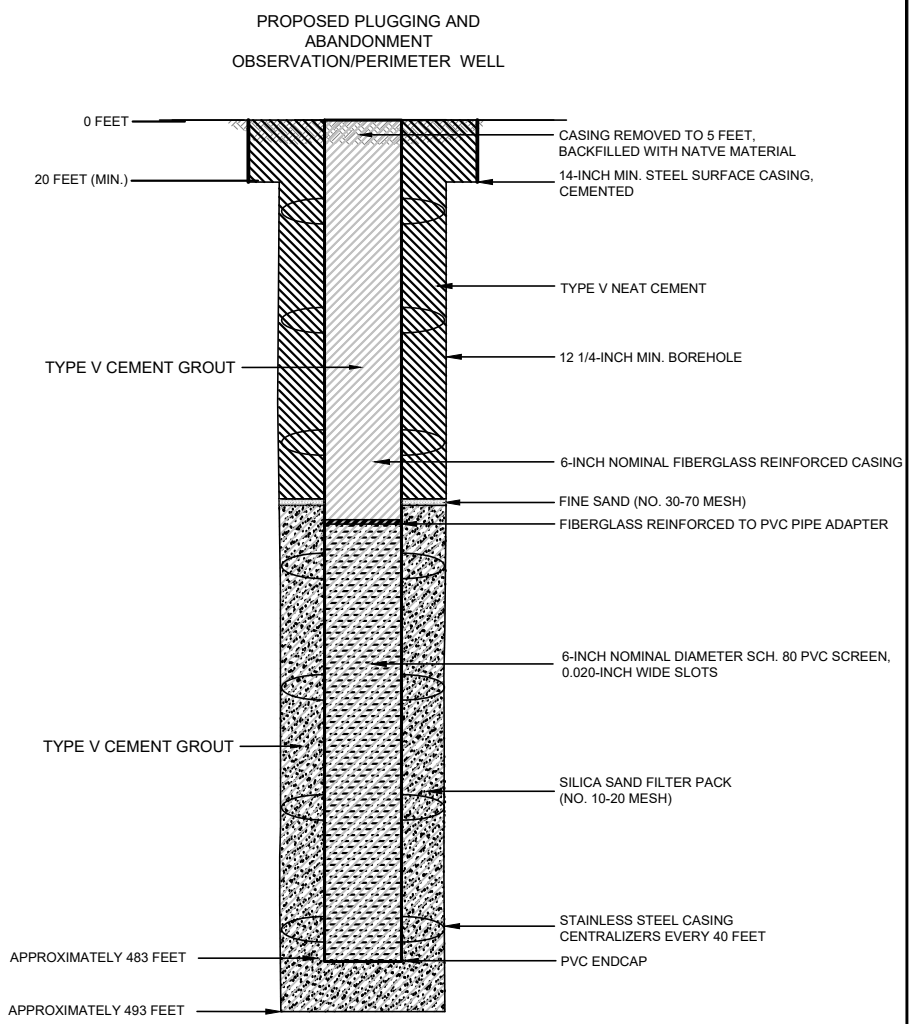

NOTES

1. WELL DESIGN DETAILS ARE BASED ON CORE HOLE AND WELL LOG RECORDS.

HALEY ALDRICH

FLORENCE COPPER, INC.
FLORENCE, ARIZONA

ABANDONMENT SCHEMATIC
RESOURCE BLOCK 22
OBSERVATION/PERIMETER WELL

JULY 2019
SCALE: AS SHOWN

FIGURE E-4b

TABLE E-4
WELLS WITHIN RESOURCE BLOCK 22
FLORENCE COPPER PROJECT
FLORENCE, ARIZONA

Well Number	Easting	Northing	Resource Block	Depth to Top of Bedrock (ft bgs)	Depth to Top of Injection Zone (ft bgs)	Depth to Bottom of Injection Zone (ft bgs)
301	849533	747050	22	341	381	483
302	849604	747121	22	341	381	483
313	849533	747121	22	341	381	483
314	849462	747050	22	341	381	483
O07	849322	747263	22	341	381	483
O08	849605	747263	22	341	381	483
P14	849393	747192	22	341	381	483
P15	849534	747192	22	341	381	483
P16	849675	747192	22	341	381	483

Notes:

ft bgs = feet below ground surface

OMB No. 2040-0042 Approval Expires 4/30/2022

United States Environmental Protection Agency

WELL REWORK RECORD, PLUGGING AND ABANDONMENT PLAN, OR PLUGGING AND ABANDONMENT AFFIDAVIT

Name and Address, Phone Number and/or Email of Permittee

Florence Copper Project
1575 W Hunt Hwy,
Florence, AZ 85132

Permit or EPA ID Number	API Number	Full Well Name
R9UIC-AZ3-FY11-1		Block 27 Wells - See Attached Table E-5

State	County
Arizona	Pinal

Locate well in two directions from nearest lines of quarter section and drilling unit

Surface Location

NW 1/4 of SW 1/4 of Section 28 Township 4S Range 9E

_____ ft. from (N/S) _____ Line of quarter section

_____ ft. from (E/W) _____ Line of quarter section.

Latitude 33.052352

Longitude -111.436308

See Attached Table for Individual Well Coordinates.

Well Class	Timing of Action (pick one)	Type of Action (pick one)
☐ Class I ☐ Class II ☑ Class III ☐ Class V	☑ Notice Prior to Work Date Expected to Commence January 2027 ☐ Report After Work Date Work Ended	☐ Well Rework ☑ Plugging and Abandonment ☐ Conversion to a Non-Injection Well

Provide a narrative description of the work planned to be performed, or that was performed. Use additional pages as necessary. See instructions.

This plugging and abandonment applies to wells Class III wells to be constructed in block 27. There are 16 Class III multi-use injection/ recovery wells, 2 dedicated Class III observation, and 5 Class III perimeter wells planned for construction in this block. The injection and recovery wells will be of uniform design, and will be used for injection and recovery on an alternate basis. Some of the injection and recovery wells will be used as perimeter and observation wells prior to well field build-out. The dedicated perimeter observation well will have a design and depth similar to the injection and recovery wells, but will not have a segmented well screen.

The work performed includes plugging and abandonment of the Class III wells in resource block 27. Plugging and abandonment will be accomplished following procedures defined in Attachment E of the application. Plugging and abandonment details are shown on the attached Figures E-5a and E-5b.

Certification

I certify under the penalty of law that I have personally examined and am familiar with the information submitted in this document and all attachments and that, based on my inquiry of those individuals immediately responsible for obtaining the information, I believe that the information is true, accurate, and complete. I am aware that there are significant penalties for submitting false information, including the possibliity of fine and imprisonment. (Ref. 40 CFR § 144.32)

Name and Official Title *(Please type or print)*	Signature	Date Signed
Dan Johnson, VP - General Manager		10/3/2019

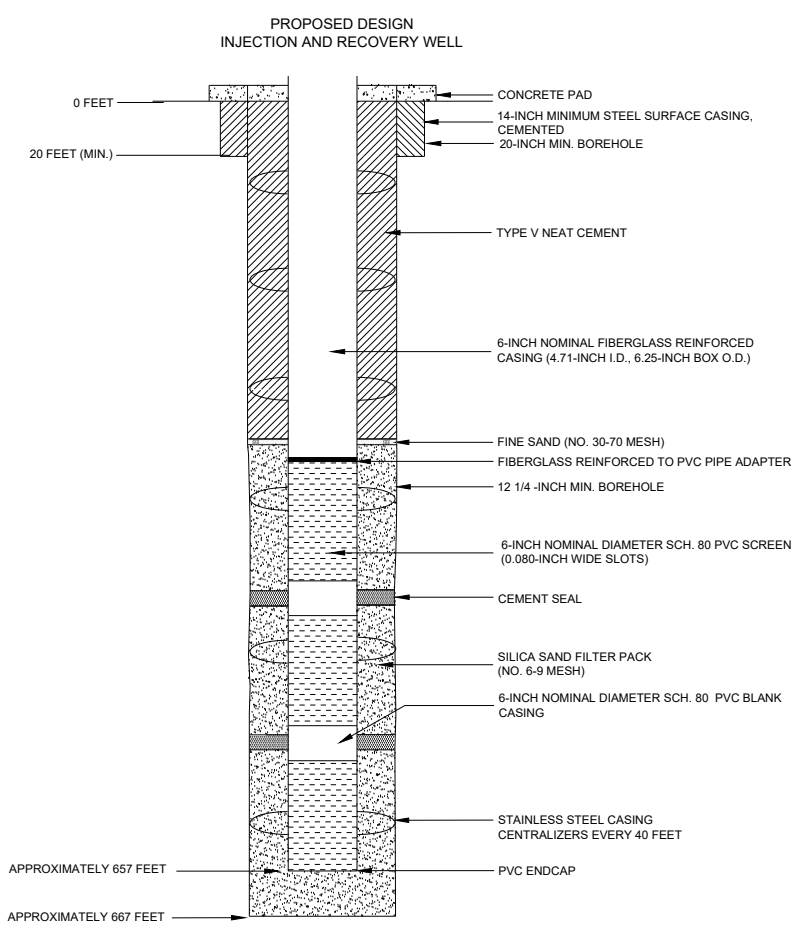

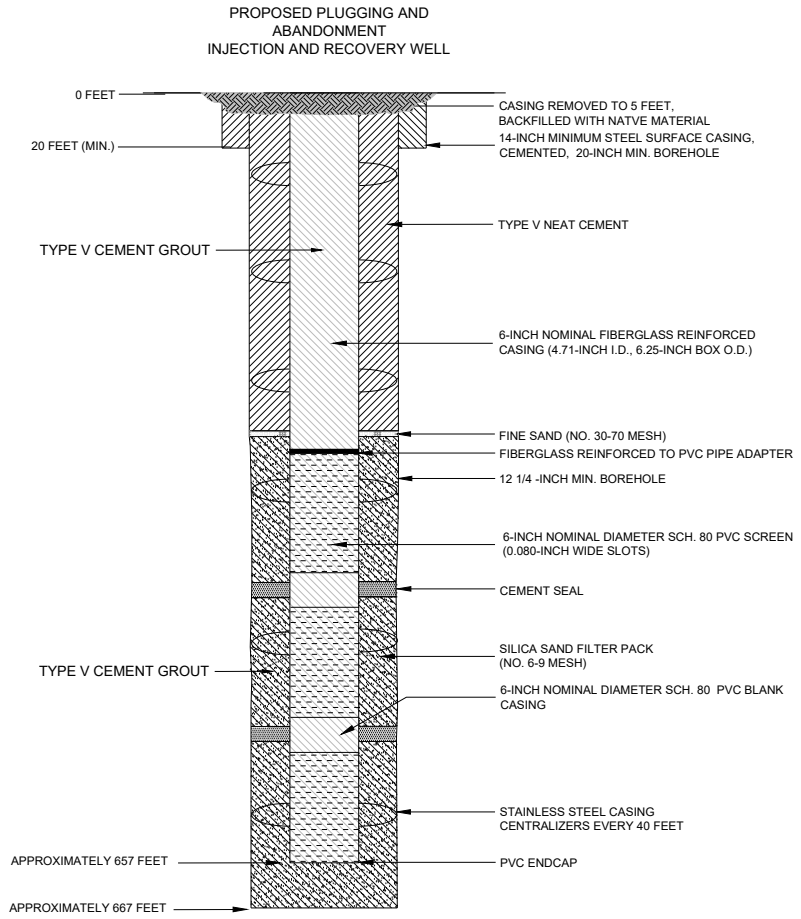

NOTES

1. WELL DESIGN DETAILS ARE BASED ON CORE HOLE AND WELL LOG RECORDS.

HALEY ALDRICH

FLORENCE COPPER, INC.
FLORENCE, ARIZONA

ABANDONMENT SCHEMATIC
RESOURCE BLOCK 27
TYPICAL INJECTION AND RECOVERY WELL

SCALE: AS SHOWN
JULY 2019

FIGURE E-5a

PROPOSED DESIGN
OBSERVATION/PERIMETER WELL

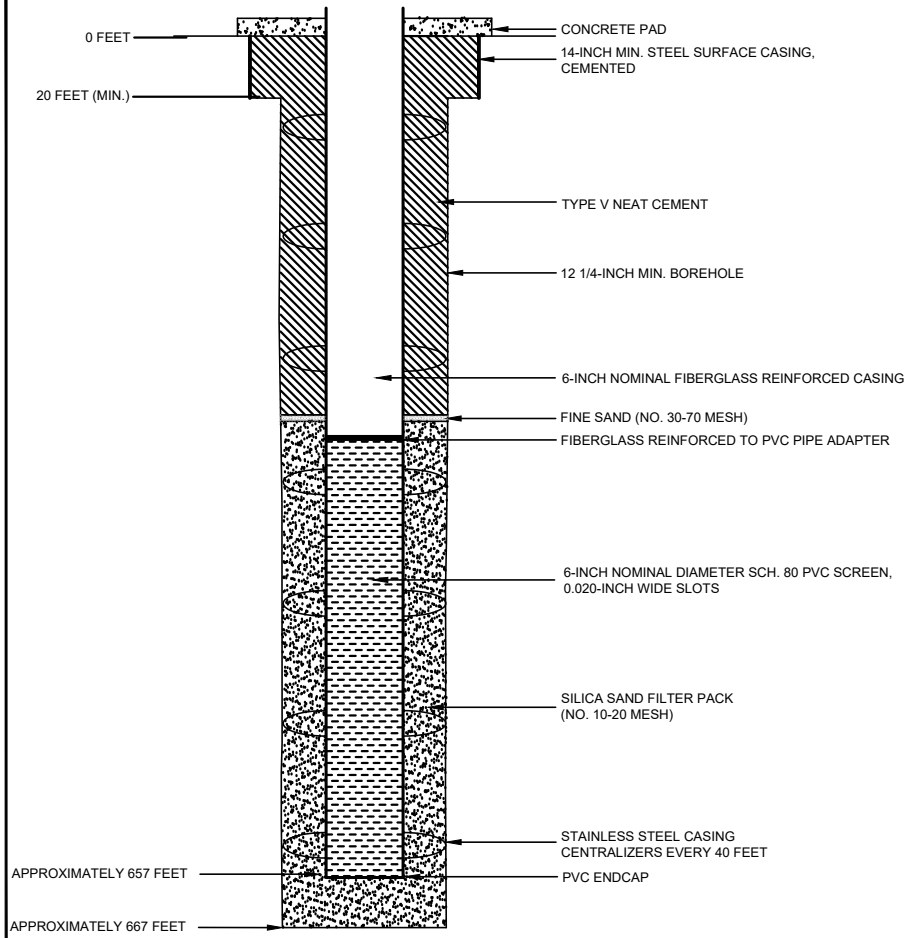

PROPOSED PLUGGING AND
ABANDONMENT
OBSERVATION/PERIMETER WELL

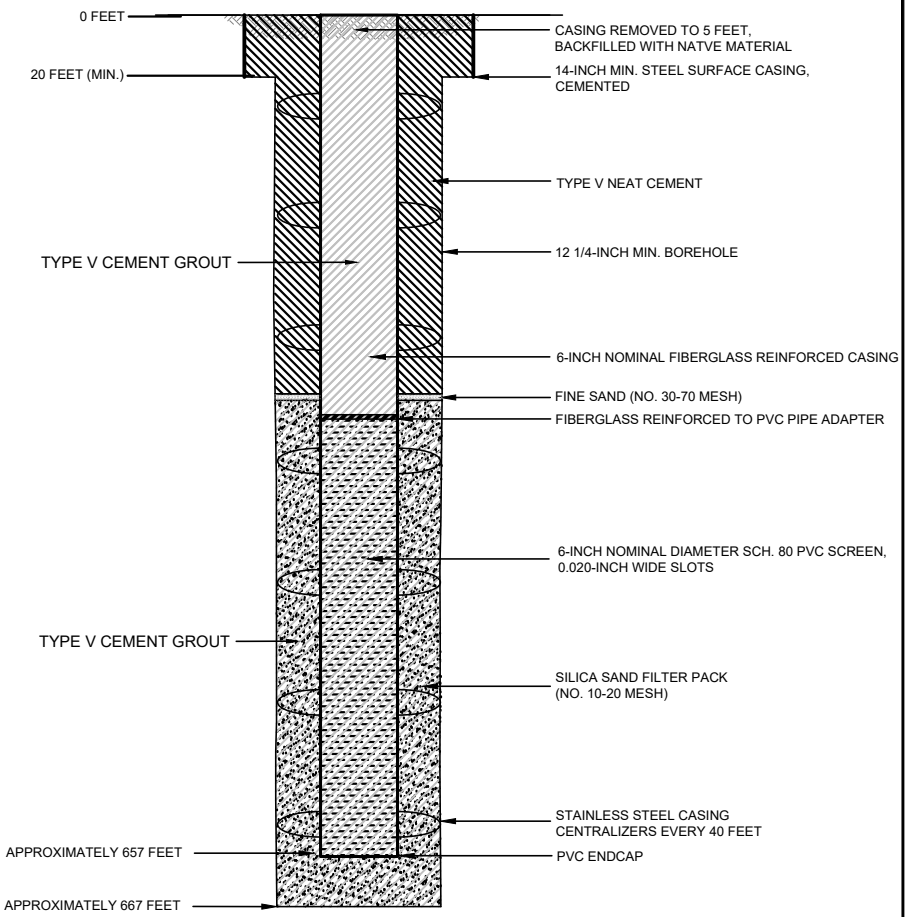

NOTES

1. WELL DESIGN DETAILS ARE BASED ON CORE HOLE AND WELL LOG RECORDS.

HALEY ALDRICH

FLORENCE COPPER, INC.
FLORENCE, ARIZONA

ABANDONMENT SCHEMATIC
RESOURCE BLOCK 27
OBSERVATION/PERIMETER WELL

JULY 2019
SCALE: AS SHOWN

FIGURE E-5b

TABLE E-5
WELLS WITHIN RESOURCE BLOCK 27
FLORENCE COPPER PROJECT
FLORENCE, ARIZONA

Well Number	Easting	Northing	Resource Block	Depth to Top of Bedrock (ft bgs)	Depth to Top of Injection Zone (ft bgs)	Depth to Bottom of Injection Zone (ft bgs)
719	847129	746768	27	350	390	657
723	847129	746838	27	350	390	657
881	847129	746909	27	350	390	657
883	847129	746980	27	350	390	657
718	847058	746697	27	350	390	657
720	847200	746838	27	350	390	657
722	847200	746909	27	350	390	657
882	847200	746980	27	350	390	657
584	847270	746980	27	350	390	657
721	847270	746909	27	350	390	657
580	847341	746980	27	350	390	657
916	847200	747050	27	350	390	657
920	847270	747050	27	350	390	657
924	847129	747050	27	350	390	657
925	847200	747121	27	350	390	657
926	847129	747121	27	350	390	657
O43	846988	746909	27	350	390	657
O44	847059	747192	27	350	390	657
P83	846988	746697	27	350	390	657
P84	847058	746838	27	350	390	657
P85	847058	746980	27	350	390	657
P86	847059	747121	27	350	390	657
P87	847129	747192	27	350	390	657

Notes:

ft bgs = feet below ground surface

OMB No. 2040-0042 Approval Expires 4/30/2022

United States Environmental Protection Agency

WELL REWORK RECORD, PLUGGING AND ABANDONMENT PLAN, OR PLUGGING AND ABANDONMENT AFFIDAVIT

Name and Address, Phone Number and/or Email of Permittee

Florence Copper Project
1575 W Hunt Hwy,
Florence, AZ 85132

Permit or EPA ID Number	API Number	Full Well Name
R9UIC-AZ3-FY11-1		Block 28 Wells - See Attached Table E-6

State	County
Arizona	Pinal

Locate well in two directions from nearest lines of quarter section and drilling unit

Surface Location

NE 1/4 of SW 1/4 of Section 28 Township 4S Range 9E

_____ ft. from (N/S) _____ Line of quarter section

_____ ft. from (E/W) _____ Line of quarter section.

Latitude 33.052554

Longitude -111.434624

See Attached Table for Individual Well Coordinates.

Well Class	Timing of Action (pick one)	Type of Action (pick one)
☐ Class I ☐ Class II ☑ Class III ☐ Class V	☑ Notice Prior to Work Date Expected to Commence January 2027 ☐ Report After Work Date Work Ended	☐ Well Rework ☑ Plugging and Abandonment ☐ Conversion to a Non-Injection Well

Provide a narrative description of the work planned to be performed, or that was performed. Use additional pages as necessary. See instructions.

This plugging and abandonment applies to wells Class III wells to be constructed in block 28. There are 49 Class III multi-use injection/ recovery wells and 1 dedicated Class III observation well planned for construction in this block. The injection and recovery wells will be of uniform design, and will be used for injection and recovery on an alternate basis. Some of the injection and recovery wells will be used as perimeter and observation wells prior to well field build-out. The dedicated observation well will have a design and depth similar to the injection and recovery wells, but will not have a segmented well screen.

The work performed includes plugging and abandonment of the Class III wells in resource block 28. Plugging and abandonment will be accomplished following procedures defined in Attachment E of the application. Plugging and abandonment details are shown on the attached Figures E-6a and E-6b.

Certification

I certify under the penalty of law that I have personally examined and am familiar with the information submitted in this document and all attachments and that, based on my inquiry of those individuals immediately responsible for obtaining the information, I believe that the information is true, accurate, and complete. I am aware that there are significant penalties for submitting false information, including the possibliity of fine and imprisonment. (Ref. 40 CFR § 144.32)

Name and Official Title *(Please type or print)*	Signature	Date Signed
Dan Johnson, VP - General Manager		10/3/2019

PROPOSED DESIGN
INJECTION AND RECOVERY WELL

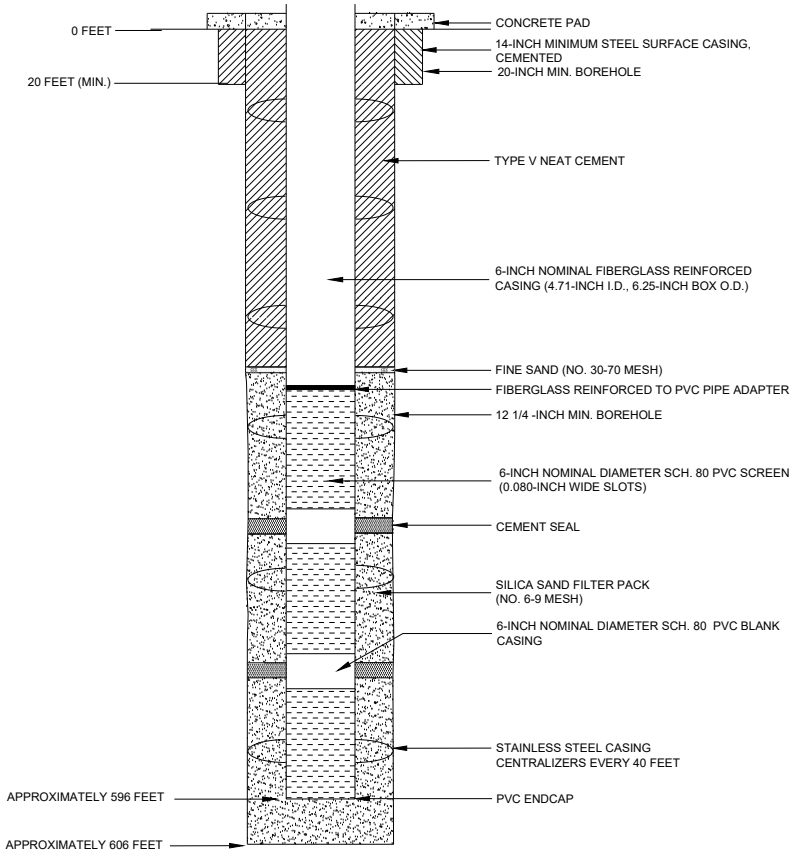

PROPOSED PLUGGING AND
ABANDONMENT
INJECTION AND RECOVERY WELL

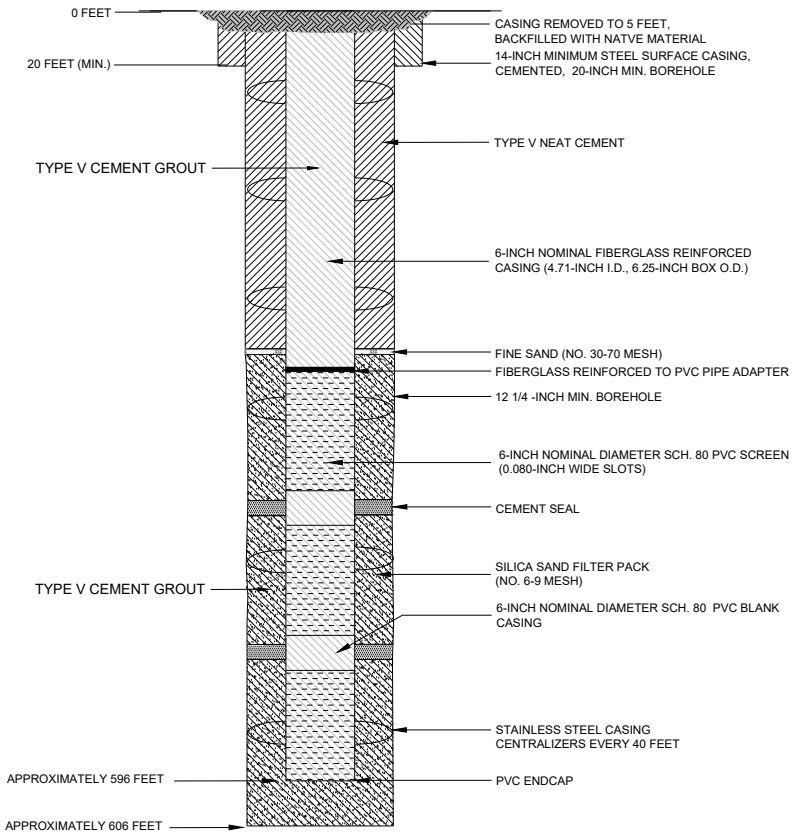

NOTES

1. WELL DESIGN DETAILS ARE BASED ON CORE HOLE AND WELL LOG RECORDS.

HALEY ALDRICH

FLORENCE COPPER, INC.
FLORENCE, ARIZONA

ABANDONMENT SCHEMATIC
RESOURCE BLOCK 28
TYPICAL INJECTION AND
RECOVERY WELL

SCALE: AS SHOWN
JULY 2019

FIGURE E-6a

Saved by: MNICHOLLS Printed: 7/25/2019 7:20 PM Sheet: HA-FIG-A-L(2)
\\HALEYALDRICH.COM\SHARE\PHX_COMMON\PROJECTS\FLORENCE COPPER\132473 FLORENCE GROUNDWATER PERMITTING\CAD\132473_000-OBSERVATION_WELL_CONSTRUCTION DIAGRAM.DWG

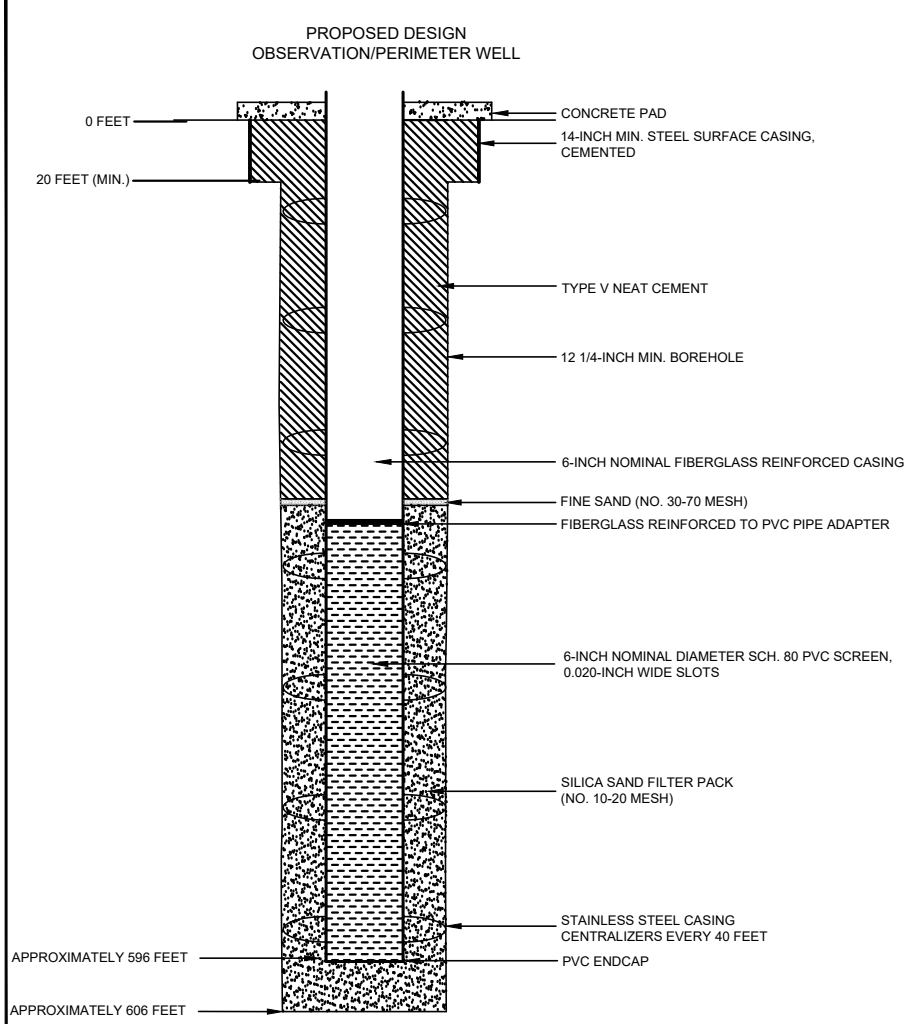

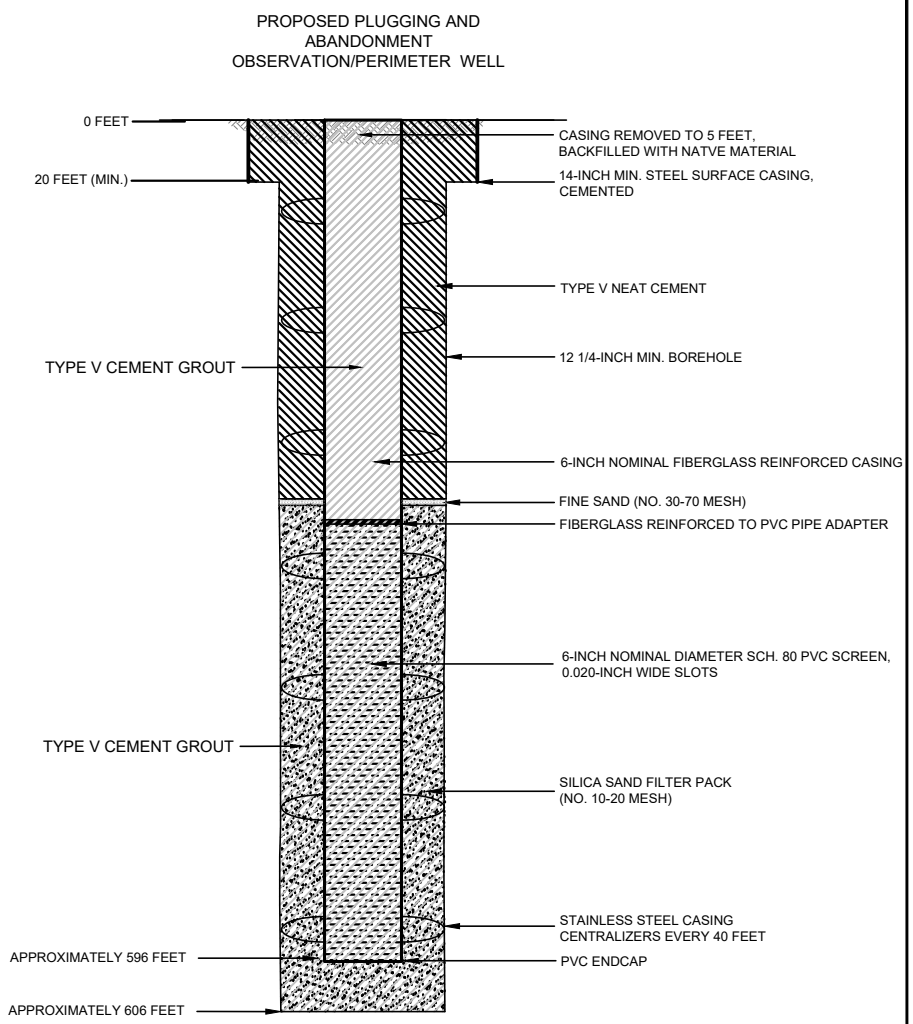

NOTES

1. WELL DESIGN DETAILS ARE BASED ON CORE HOLE AND WELL LOG RECORDS.

HALEY ALDRICH

FLORENCE COPPER, INC.
FLORENCE, ARIZONA

ABANDONMENT SCHEMATIC
RESOURCE BLOCK 28
OBSERVATION/PERIMETER WELL

JULY 2019
SCALE: AS SHOWN

FIGURE E-6b

TABLE E-6
WELLS WITHIN RESOURCE BLOCK 28
FLORENCE COPPER PROJECT
FLORENCE, ARIZONA

Well Number	Easting	Northing	Resource Block	Depth to Top of Bedrock (ft bgs)	Depth to Top of Injection Zone (ft bgs)	Depth to Bottom of Injection Zone (ft bgs)
517	847695	746697	28	351	391	596
570	847624	747121	28	351	391	596
568	847553	747121	28	351	391	596
571	847624	747192	28	351	391	596
575	847553	746838	28	351	391	596
578	847483	746909	28	351	391	596
581	847412	746980	28	351	391	596
585	847553	747050	28	351	391	596
586	847483	747050	28	351	391	596
588	847553	746980	28	351	391	596
705	847622	747255	28	351	391	596
703	847672	747205	28	351	391	596
704	847572	747205	28	351	391	596
634	848048	746980	28	351	391	596
631	847978	746909	28	351	391	596
630	847907	746980	28	351	391	596
629	847978	746980	28	351	391	596
628	847836	747050	28	351	391	596
627	847907	747050	28	351	391	596
626	847978	747050	28	351	391	596
625	847695	747050	28	351	391	596
624	847695	746980	28	351	391	596
623	847765	747050	28	351	391	596
622	847695	746838	28	351	391	596
621	847765	746909	28	351	391	596
619	847765	746980	28	351	391	596
620	847836	746980	28	351	391	596
618	847695	746909	28	351	391	596
617	847765	746768	28	351	391	596
589	847483	746980	28	351	391	596
590	847553	746909	28	351	391	596
591	847624	746768	28	351	391	596
593	847625	746837	28	351	391	596
594	847624	746909	28	351	391	596
595	847624	747050	28	351	391	596
596	847624	746980	28	351	391	596
597	847836	747121	28	351	391	596
599	847765	747121	28	351	391	596
600	847765	747192	28	351	391	596

TABLE E-6
WELLS WITHIN RESOURCE BLOCK 28
FLORENCE COPPER PROJECT
FLORENCE, ARIZONA

Well Number	Easting	Northing	Resource Block	Depth to Top of Bedrock (ft bgs)	Depth to Top of Injection Zone (ft bgs)	Depth to Bottom of Injection Zone (ft bgs)
601	847695	747121	28	351	391	596
603	847907	747121	28	351	391	596
610	847836	746768	28	351	391	596
609	847765	746697	28	351	391	596
611	847907	746838	28	351	391	596
612	847695	746768	28	351	391	596
613	847765	746838	28	351	391	596
614	847836	746909	28	351	391	596
615	847907	746909	28	351	391	596
616	847836	746838	28	351	391	596
P04	847765	747263	28	351	391	596

Notes:

ft bgs = feet below ground surface

OMB No. 2040-0042 Approval Expires 4/30/2022

United States Environmental Protection Agency

WELL REWORK RECORD, PLUGGING AND ABANDONMENT PLAN, OR PLUGGING AND ABANDONMENT AFFIDAVIT

Name and Address, Phone Number and/or Email of Permittee

Florence Copper Project
1575 W Hunt Hwy,
Florence, AZ 85132

Permit or EPA ID Number	API Number	Full Well Name
R9UIC-AZ3-FY11-1		Block 29 Wells - See Attached Table E-7

State	County
Arizona	Pinal

Locate well in two directions from nearest lines of quarter section and drilling unit

Surface Location

NE 1/4 of SW 1/4 of Section 28 Township 4S Range 9E

_____ ft. from (N/S) _____ Line of quarter section

_____ ft. from (E/W) _____ Line of quarter section.

Latitude 33.052289

Longitude -111.432285

See Attached Table for Individual Well Coordinates.

Well Class	Timing of Action (pick one)	Type of Action (pick one)
☐ Class I ☐ Class II ☑ Class III ☐ Class V	☑ Notice Prior to Work Date Expected to Commence January 2027 ☐ Report After Work Date Work Ended	☐ Well Rework ☑ Plugging and Abandonment ☐ Conversion to a Non-Injection Well

Provide a narrative description of the work planned to be performed, or that was performed. Use additional pages as necessary. See instructions.

This plugging and abandonment applies to wells Class III wells to be constructed in block 29. There are 35 Class III multi-use injection/ recovery wells, 1 dedicated Class III observation, and 1 Class III perimeter wells planned for construction in this block. The injection and recovery wells will be of uniform design, and will be used for injection and recovery on an alternate basis. Some of the injection and recovery wells will be used as perimeter and observation wells prior to well field build-out. The dedicated perimeter observation well will have a design and depth similar to the injection and recovery wells, but will not have a segmented well screen.

The work performed includes plugging and abandonment of the Class III wells in resource block 29. Plugging and abandonment will be accomplished following procedures defined in Attachment E of the application. Plugging and abandonment details are shown on the attached Figures E-7a and E-7b.

Certification

I certify under the penalty of law that I have personally examined and am familiar with the information submitted in this document and all attachments and that, based on my inquiry of those individuals immediately responsible for obtaining the information, I believe that the information is true, accurate, and complete. I am aware that there are significant penalties for submitting false information, including the possibliity of fine and imprisonment. (Ref. 40 CFR § 144.32)

Name and Official Title *(Please type or print)*	Signature	Date Signed
Dan Johnson, VP - General Manager		10/3/2019

PROPOSED DESIGN
INJECTION AND RECOVERY WELL

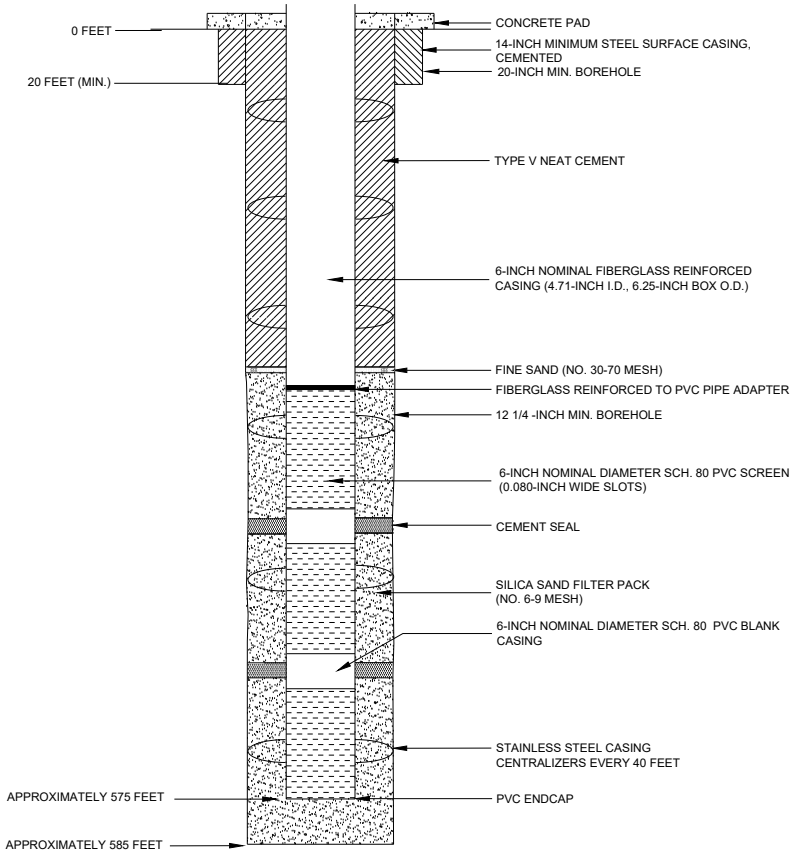

PROPOSED PLUGGING AND
ABANDONMENT
INJECTION AND RECOVERY WELL

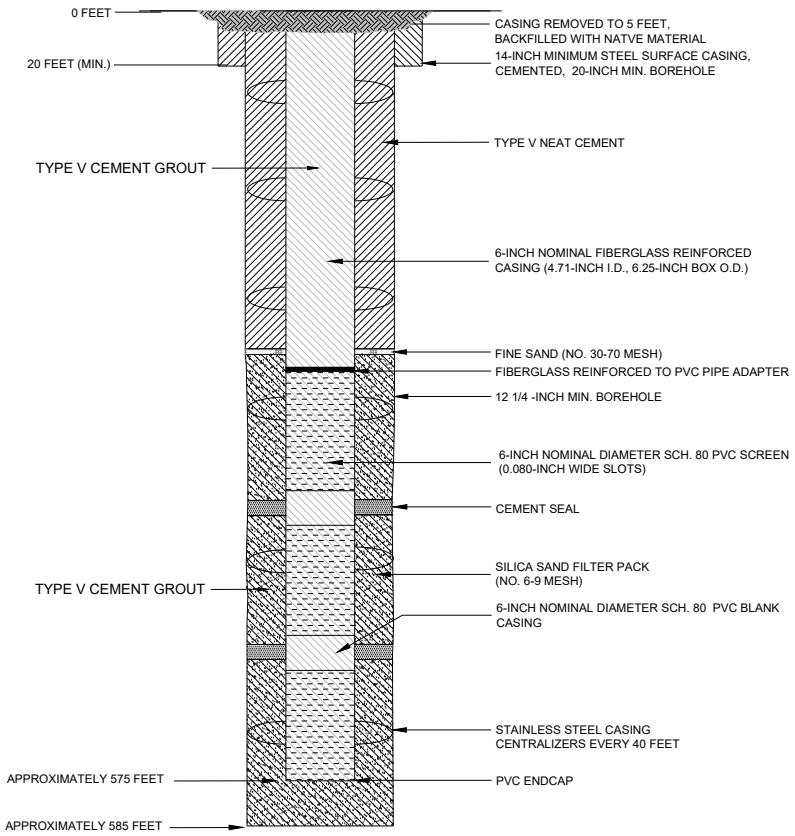

NOTES

1. WELL DESIGN DETAILS ARE BASED ON CORE HOLE AND WELL LOG RECORDS.

HALEY ALDRICH

FLORENCE COPPER, INC.
FLORENCE, ARIZONA

ABANDONMENT SCHEMATIC
RESOURCE BLOCK 29
TYPICAL INJECTION AND
RECOVERY WELL

SCALE: AS SHOWN
JULY 2019

FIGURE E-7a

Saved by: MNICHOLLS Printed: 7/25/2019 7:20 PM Sheet: HA-FIG-A-L(2)
\\HALEYALDRICH.COM\SHARE\PHX_COMMON\PROJECTS\FLORENCE COPPER\132473 FLORENCE GROUNDWATER PERMITTING\CAD\132473_000-OBSERVATION_WELL_CONSTRUCTION DIAGRAM.DWG

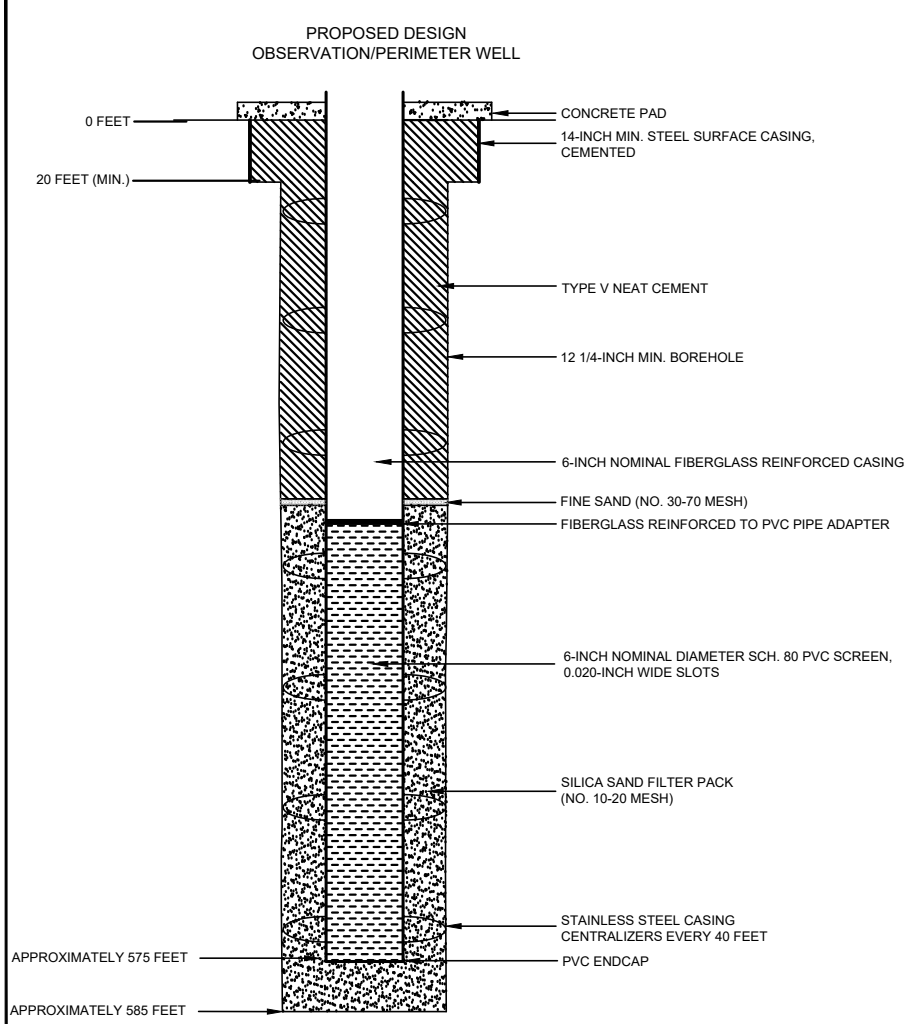

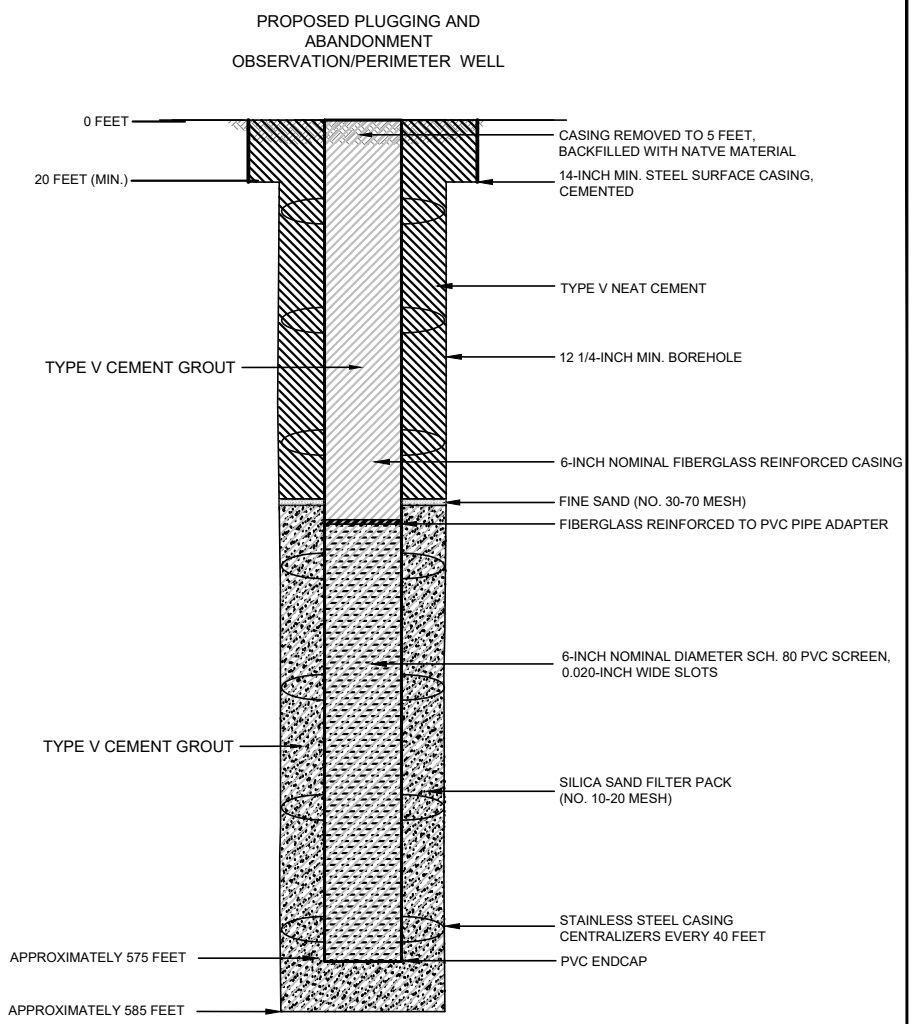

NOTES

1. WELL DESIGN DETAILS ARE BASED ON CORE HOLE AND WELL LOG RECORDS.

HALEY ALDRICH

FLORENCE COPPER, INC.
FLORENCE, ARIZONA

ABANDONMENT SCHEMATIC
RESOURCE BLOCK 29
OBSERVATION/PERIMETER WELL

JULY 2019
SCALE: AS SHOWN

FIGURE E-7b

TABLE E-7
WELLS WITHIN RESOURCE BLOCK 29
FLORENCE COPPER PROJECT
FLORENCE, ARIZONA

Well Number	Easting	Northing	Resource Block	Depth to Top of Bedrock (ft bgs)	Depth to Top of Injection Zone (ft bgs)	Depth to Bottom of Injection Zone (ft bgs)
1	848614	746838	29	348	388	575
2	848614	746909	29	348	388	575
3	848557	746838	29	348	388	575
4	848685	746980	29	348	388	575
5	848685	746909	29	348	388	575
7	848755	746980	29	348	388	575
131	848684	747050	29	348	388	575
635	848260	747121	29	348	388	575
643	848543	746768	29	348	388	575
646	848543	746909	29	348	388	575
651	848331	746838	29	348	388	575
652	848402	746909	29	348	388	575
653	848472	746980	29	348	388	575
654	848543	746980	29	348	388	575
656	848369	746838	29	348	388	575
655	848508	746934	29	348	388	575
657	848331	746768	29	348	388	575
662	848331	746909	29	348	388	575
660	848472	747050	29	348	388	575
661	848402	746980	29	348	388	575
663	848260	746838	29	348	388	575
668	848260	746909	29	348	388	575
669	848331	746980	29	348	388	575
670	848331	747050	29	348	388	575
671	848260	746980	29	348	388	575
672	848190	746909	29	348	388	575
684	848260	747050	29	348	388	575
685	848190	747050	29	348	388	575
686	848190	746980	29	348	388	575
687	848119	746980	29	348	388	575
688	848614	747050	29	348	388	575
689	848614	746980	29	348	388	575
709	848521	747064	29	348	388	575
710	848421	747064	29	348	388	575
711	848471	747114	29	348	388	575
O04	848331	747263	29	348	388	575
P08	848473	747192	29	348	388	575

Notes:

ft bgs = feet below ground surface

OMB No. 2040-0042 Approval Expires 4/30/2022

United States Environmental Protection Agency

WELL REWORK RECORD, PLUGGING AND ABANDONMENT PLAN, OR PLUGGING AND ABANDONMENT AFFIDAVIT

Name and Address, Phone Number and/or Email of Permittee

Florence Copper Project
1575 W Hunt Hwy,
Florence, AZ 85132

Permit or EPA ID Number	API Number	Full Well Name
R9UIC-AZ3-FY11-1		Block 30 Wells - See Attached Table E-8

State	County
Arizona	Pinal

Locate well in two directions from nearest lines of quarter section and drilling unit

Surface Location

NW 1/4 of SE 1/4 of Section 28 Township 4S Range 9E

_____ ft. from (N/S) _____ Line of quarter section

_____ ft. from (E/W) _____ Line of quarter section.

Latitude 33.052368

Longitude -111.429986

See Attached Table for Individual Well Coordinates.

Well Class	Timing of Action (pick one)	Type of Action (pick one)
☐ Class I ☐ Class II ☑ Class III ☐ Class V	☑ Notice Prior to Work Date Expected to Commence January 2027 ☐ Report After Work Date Work Ended	☐ Well Rework ☑ Plugging and Abandonment ☐ Conversion to a Non-Injection Well

Provide a narrative description of the work planned to be performed, or that was performed. Use additional pages as necessary. See instructions.

This plugging and abandonment applies to wells Class III wells to be constructed in block 30 There are 44 Class III multi-use injection/ recovery wells, 1 dedicated Class III observation, and 2 Class III perimeter wells planned for construction in this block. The injection and recovery wells will be of uniform design, and will be used for injection and recovery on an alternate basis. Some of the injection and recovery wells will be used as perimeter and observation wells prior to well field build-out. The dedicated perimeter observation well will have a design and depth similar to the injection and recovery wells, but will not have a segmented well screen.

The work performed includes plugging and abandonment of the Class III wells in resource block 30. Plugging and abandonment will be accomplished following procedures defined in Attachment E of the application. Plugging and abandonment details are shown on the attached Figures E-8a and E-8b.

Certification

I certify under the penalty of law that I have personally examined and am familiar with the information submitted in this document and all attachments and that, based on my inquiry of those individuals immediately responsible for obtaining the information, I believe that the information is true, accurate, and complete. I am aware that there are significant penalties for submitting false information, including the possibliity of fine and imprisonment. (Ref. 40 CFR § 144.32)

Name and Official Title *(Please type or print)*	Signature	Date Signed
Dan Johnson, VP - General Manager		10/3/2019

INSTRUCTIONS FOR FORM 7520-19

This form replaces forms 7520-12 and 7520-14. Use this form only when work is planned or has occurred that affects the well's construction or operation as an injection well, including work on the casing, tubing or packer (or for shallow Class V wells, the subsurface fluid emplacement network). Use one form per injection well. While reports or other information developed by contractors or service companies may be attached, this form must be signed by a responsible entity as described at 40 CFR 144.32. Note: operators closing Class V wells should use Form 7520-17.

NAME, ADDRESS, PHONE AND/OR EMAIL OF PERMITTEE: Enter the name and street address, city/town, state, and ZIP code of the permittee. Also provide an email address (if available) and/or a phone number.

PERMIT OR EPA ID NUMBER: Enter the well identification number or permit number assigned to the well by the EPA or the permitting authority.

API NUMBER: Enter the number assigned by the local jurisdiction (usually a State Oil and Gas Agency) using the American Petroleum Institute standard numbering system.

FULL WELL NAME: Enter the full name of the well or project.

Enter the **STATE** and **COUNTY** where the well is located. For States that do not have counties, use the name of that State's equivalent jurisdiction at a more local level.

WELL LOCATION: Fill in the complete township, range, and section to the nearest quarter-quarter section. A township is north or south of the baseline, and a range is east or west of the principal meridian (e.g., T12N, R34W). Also include the distance, in feet, from the nearest north or south line and nearest east or west line of the quarter-section. Also, enter the **latitude** and **longitude** of the well in decimal degrees, to five or six places if possible; be sure to include a negative sign for the longitude of a well in the Western Hemisphere and a negative sign for the latitude of a well in the Southern Hemisphere.

Enter the **WELL CLASS,** i.e., the class of injection well as defined in 40 CFR 144.6.

TIMING OF THE ACTION: Check ***Notice prior to work*** if the activity has not yet occurred (i.e., is planned). Check ***Report after work*** if the activity described has already occurred. As appropriate, include the date the activity is expected to start or the date the activity was completed. (Note this may not be available, e.g., for a plugging plan submitted with a permit application.)

TYPE OF ACTION: Check the appropriate box to describe the kind of activity being reported. Check ***Well Rework*** for work that was/will be performed on the well after it has already been in operation as an injection well. Check ***Plugging and Abandonment*** to report on plans for or descriptions of final closure/plugging after use as an injection well. Check ***Conversion to a Non-Injection Well*** if the well is to be converted to something other than an injection well.

Provide a **NARRATIVE DESCRIPTION** of the work planned to be performed, or that was performed. The narrative should include a description of the main procedures planned or that occurred during the work activity. A service company report, daily report, or similar document may be attached if it includes all the requested information and is clear and legible.

For well reworks, include the following information: The reason for the well rework; depths of activity; type of activity; changes to injection well configuration, well casing, or cement behind casing; any plug added to the well and its depth; any newly drilled interval and its depth; method(s) to demonstrate that the well has mechanical integrity (as applicable); and any deviations from the approved rework plan (as applicable).

For a well plugging plan, include the following information: Reason for the well plugging; number of plugs placed, and their depths; materials used as plugs (e.g., cast iron bridge plug, cement, cement retainer); method to set plugs; and wait-on-cement times, if any. Also provide one or more cost estimates from an independent firm in the business of plugging and abandoning wells to plug the well as described in the plan.

For well plugging affidavit, include the following information: Reason for the well plugging; number of plugs placed, and their depths; materials used as plugs (e.g., cast iron bridge plug, cement, cement retainer); method to set plugs; wait-on-cement times, if any; and any deviations from the approved plugging plan (if applicable).

For conversion to a non-injection well, include the following information: Depths of activity; type of activity; changes to injection well configuration, well casing, or cement behind casing; any plug added to the well and its depth; any newly drilled interval and its depth; depths of new perforations; and method(s) to demonstrate that the well has mechanical integrity (as applicable).

For all of the above activities, include a well sketch depicting the work, results of well tests/logging performed, service company tickets, and any other available information demonstrating how the work was/is to be performed. Also, specify whether depths are below ground surface, relative to Kelly bushing, etc.

CERTIFICATION: This form must be signed and dated by either: a responsible corporate officer for a corporation, by a general partner for a partnership, by the proprietor of a sole proprietorship, or by a principal executive or ranking elected official for a public agency.

PAPERWORK REDUCTION ACT NOTICE: The public reporting and recordkeeping burden for this collection of information is estimated to average between 6.0 and 7.9 hours per response, depending on the injection well class. Burden means the total time, effort, or financial resource expended by persons to generate, maintain, retain, or disclose or provide information to or for a Federal Agency. This includes the time needed to review instructions; develop, acquire, install, and utilize technology and systems for the purposes of collecting, validating, and verifying information, processing and maintaining information, and disclosing and providing information; adjust the existing ways to comply with any previously applicable instructions and requirements; train personnel to be able to respond to the collection of information; search data sources; complete and review the collection of information; and, transmit or otherwise disclose the information. An agency may not conduct or sponsor, and a person is not required to respond to, a collection of information unless it displays a currently valid OMB control number. Send comments on the Agency's need for this information, the accuracy of the provided burden estimates, and any suggested methods for minimizing respondent burden, including the use of automated collection techniques to Director, Collection Strategies Division, U.S. Environmental Protection Agency (2822), 1200 Pennsylvania Ave., NW., Washington, D.C. 20460. Include the OMB control number in any correspondence. Do not send the completed forms to this address.

PROPOSED DESIGN
INJECTION AND RECOVERY WELL

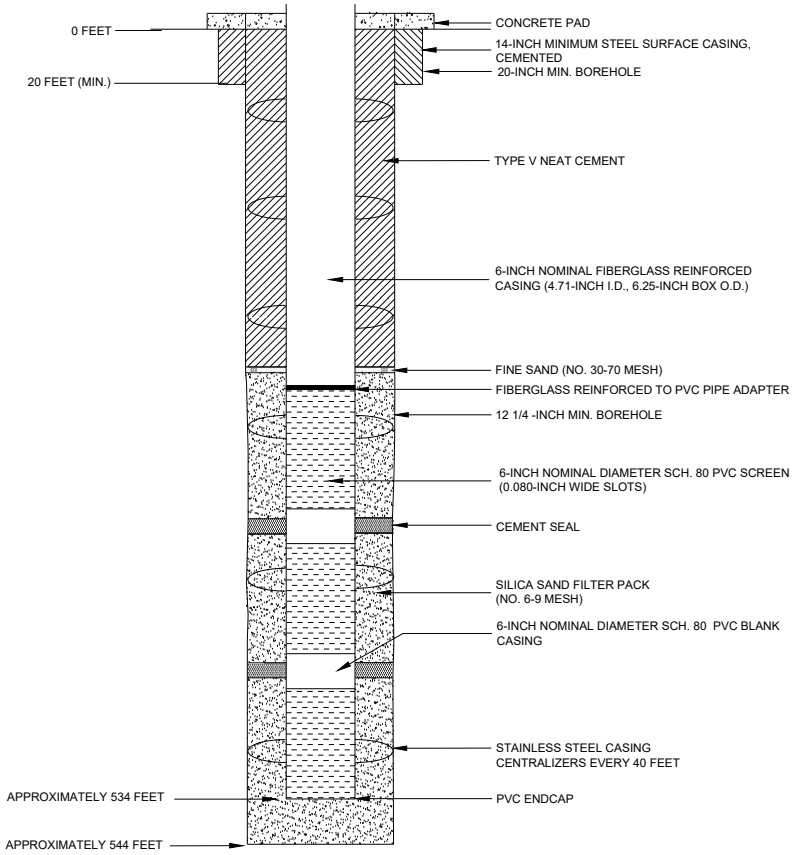

PROPOSED PLUGGING AND
ABANDONMENT
INJECTION AND RECOVERY WELL

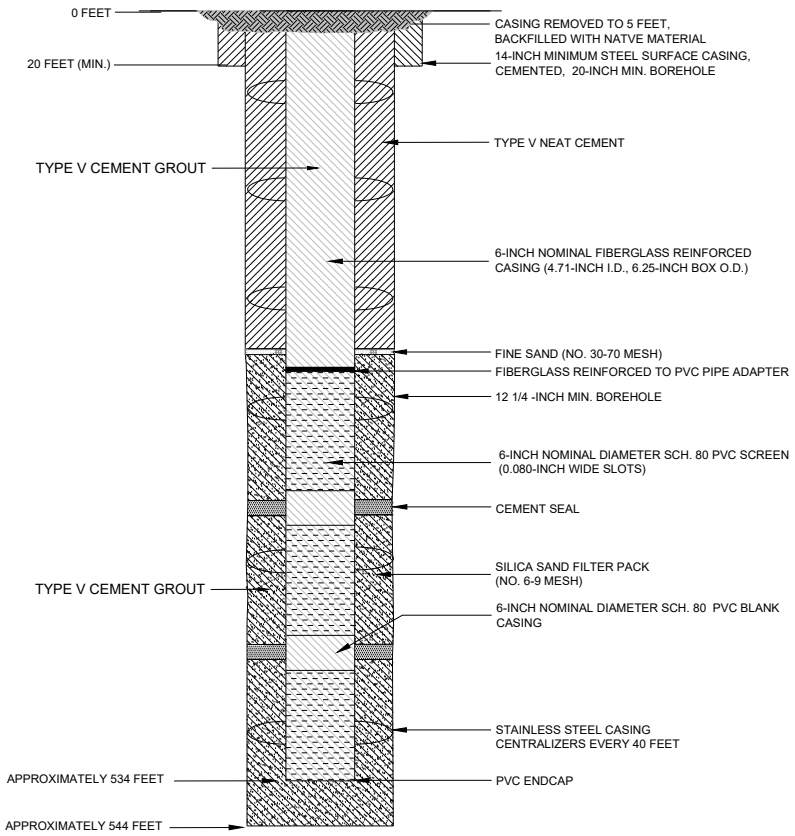

NOTES

1. WELL DESIGN DETAILS ARE BASED ON CORE HOLE AND WELL LOG RECORDS.

HALEY ALDRICH

FLORENCE COPPER, INC.
FLORENCE, ARIZONA

ABANDONMENT SCHEMATIC
RESOURCE BLOCK 30
TYPICAL INJECTION AND
RECOVERY WELL

SCALE: AS SHOWN
JULY 2019

FIGURE E-8a

Saved by: MNICHOLLS Printed: 7/25/2019 7:20 PM Sheet: HA-FIG-A-L(2)
\\HALEYALDRICH.COM\SHARE\PHX_COMMON\PROJECTS\FLORENCE COPPER\132473 FLORENCE GROUNDWATER PERMITTING\CAD\132473_000-OBSERVATION_WELL_CONSTRUCTION DIAGRAM.DWG

PROPOSED DESIGN
OBSERVATION/PERIMETER WELL

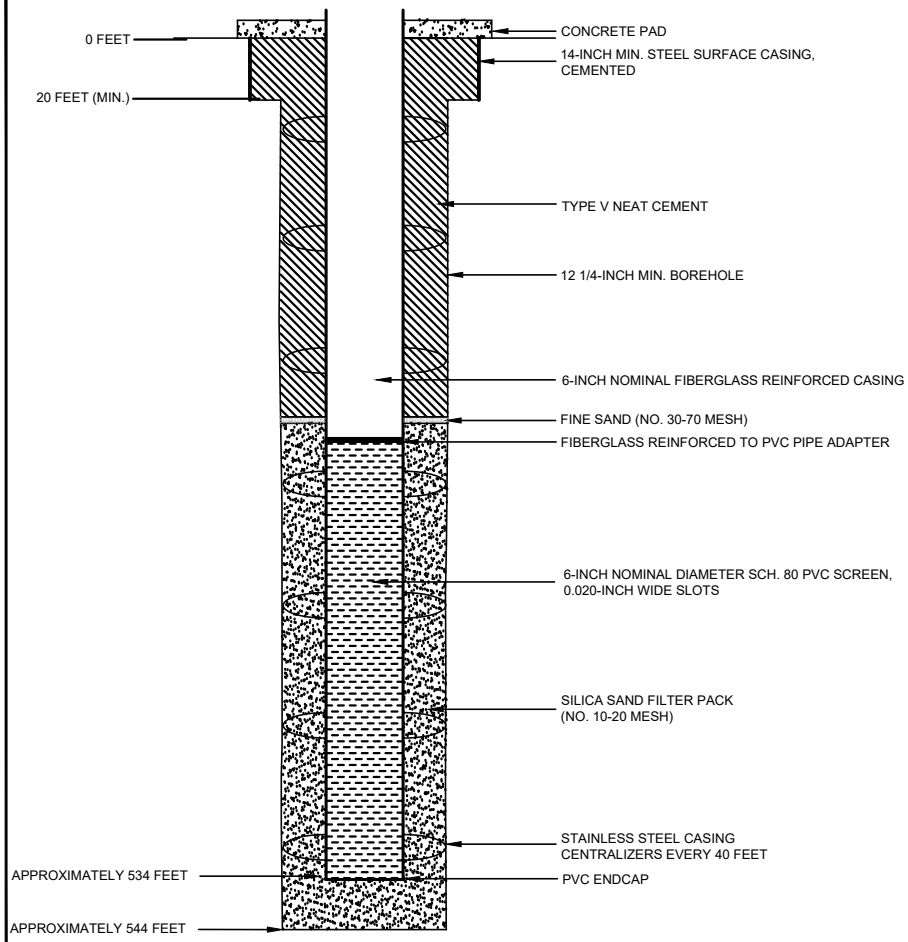

PROPOSED PLUGGING AND
ABANDONMENT
OBSERVATION/PERIMETER WELL

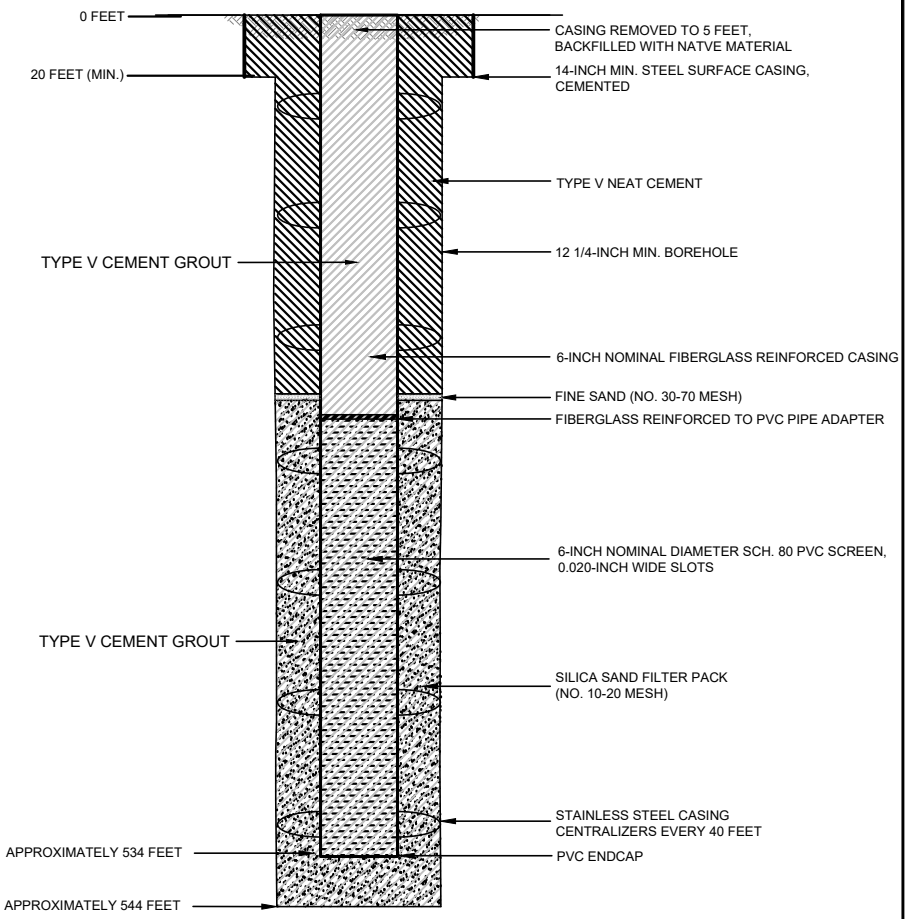

NOTES

1. WELL DESIGN DETAILS ARE BASED ON CORE HOLE AND WELL LOG RECORDS.

HALEY ALDRICH

FLORENCE COPPER, INC.
FLORENCE, ARIZONA

ABANDONMENT SCHEMATIC
RESOURCE BLOCK 30
OBSERVATION/PERIMETER WELL

JULY 2019
SCALE: AS SHOWN

FIGURE E-8b

TABLE E-8
WELLS WITHIN RESOURCE BLOCK 30
FLORENCE COPPER PROJECT
FLORENCE, ARIZONA

Well Number	Easting	Northing	Resource Block	Depth to Top of Bedrock (ft bgs)	Depth to Top of Injection Zone (ft bgs)	Depth to Bottom of Injection Zone (ft bgs)
28	848967	747121	30	344	384	534
30	849109	747121	30	344	384	534
31	849038	747121	30	344	384	534
36	849321	747121	30	344	384	534
37	849180	747121	30	344	384	534
38	849250	747121	30	344	384	534
41	849109	746768	30	344	384	534
48	849038	746838	30	344	384	534
49	849109	746838	30	344	384	534
50	849038	746768	30	344	384	534
56	848967	746909	30	344	384	534
62	848897	746980	30	344	384	534
63	848967	746980	30	344	384	534
64	848897	746909	30	344	384	534
66	848897	747050	30	344	384	534
67	848826	746980	30	344	384	534
68	849109	747050	30	344	384	534
70	848967	747050	30	344	384	534
69	849038	747050	30	344	384	534
57	849038	746909	30	344	384	534
58	848967	746838	30	344	384	534
71	849109	746980	30	344	384	534
72	849038	746980	30	344	384	534
73	849109	746909	30	344	384	534
75	849180	746837	30	344	384	534
76	849250	746909	30	344	384	534
77	849180	746909	30	344	384	534
78	849392	747050	30	344	384	534
79	849321	747050	30	344	384	534
80	849250	747050	30	344	384	534
82	849321	746980	30	344	384	534
81	849180	747050	30	344	384	534
83	849250	746980	30	344	384	534
84	849180	746980	30	344	384	534
295	849250	746768	30	344	384	534
296	849321	746838	30	344	384	534
297	849392	746909	30	344	384	534
298	849462	746980	30	344	384	534
300	849180	746697	30	344	384	534

TABLE E-8
WELLS WITHIN RESOURCE BLOCK 30
FLORENCE COPPER PROJECT
FLORENCE, ARIZONA

Well Number	Easting	Northing	Resource Block	Depth to Top of Bedrock (ft bgs)	Depth to Top of Injection Zone (ft bgs)	Depth to Bottom of Injection Zone (ft bgs)
315	849392	746980	30	344	384	534
317	849250	746838	30	344	384	534
316	849321	746909	30	344	384	534
318	849180	746768	30	344	384	534
319	849109	746697	30	344	384	534
O06	849038	747263	30	344	384	534
P12	849109	747192	30	344	384	534
P13	849251	747192	30	344	384	534

Notes:

ft bgs = feet below ground surface

OMB No. 2040-0042 Approval Expires 4/30/2022

United States Environmental Protection Agency

WELL REWORK RECORD, PLUGGING AND ABANDONMENT PLAN, OR PLUGGING AND ABANDONMENT AFFIDAVIT

Name and Address, Phone Number and/or Email of Permittee

Florence Copper Project
1575 W Hunt Hwy,
Florence, AZ 85132

Permit or EPA ID Number	API Number	Full Well Name
R9UIC-AZ3-FY11-1		Block 31 Wells - See Attached Table E-9

State	County
Arizona	Pinal

Locate well in two directions from nearest lines of quarter section and drilling unit

Surface Location

NW 1/4 of SE 1/4 of Section 28 Township 4S Range 9E

_____ ft. from (N/S) _____ Line of quarter section

_____ ft. from (E/W) _____ Line of quarter section.

Latitude 33.052432

Longitude -111.428116

See Attached Table for Individual Well Coordinates.

Well Class	Timing of Action (pick one)	Type of Action (pick one)
☐ Class I ☐ Class II ☑ Class III ☐ Class V	☑ Notice Prior to Work Date Expected to Commence January 2027 ☐ Report After Work Date Work Ended	☐ Well Rework ☑ Plugging and Abandonment ☐ Conversion to a Non-Injection Well

Provide a narrative description of the work planned to be performed, or that was performed. Use additional pages as necessary. See instructions.

This plugging and abandonment applies to wells Class III wells to be constructed in block 31 There are 20 Class III multi-use injection/ recovery wells, 3 dedicated Class III observation, and 3 Class III perimeter wells planned for construction in this block. The injection and recovery wells will be of uniform design, and will be used for injection and recovery on an alternate basis. Some of the injection and recovery wells will be used as perimeter and observation wells prior to well field build-out. The dedicated perimeter observation well will have a design and depth similar to the injection and recovery wells, but will not have a segmented well screen.

The work performed includes plugging and abandonment of the Class III wells in resource block 31. Plugging and abandonment will be accomplished following procedures defined in Attachment E of the application. Plugging and abandonment details are shown on the attached Figures E-9a and E-9b.

Certification

I certify under the penalty of law that I have personally examined and am familiar with the information submitted in this document and all attachments and that, based on my inquiry of those individuals immediately responsible for obtaining the information, I believe that the information is true, accurate, and complete. I am aware that there are significant penalties for submitting false information, including the possibliity of fine and imprisonment. (Ref. 40 CFR § 144.32)

Name and Official Title *(Please type or print)*	Signature	Date Signed
Dan Johnson, VP - General Manager		10/3/2019

INSTRUCTIONS FOR FORM 7520-19

This form replaces forms 7520-12 and 7520-14. Use this form only when work is planned or has occurred that affects the well's construction or operation as an injection well, including work on the casing, tubing or packer (or for shallow Class V wells, the subsurface fluid emplacement network). Use one form per injection well. While reports or other information developed by contractors or service companies may be attached, this form must be signed by a responsible entity as described at 40 CFR 144.32. Note: operators closing Class V wells should use Form 7520-17.

NAME, ADDRESS, PHONE AND/OR EMAIL OF PERMITTEE: Enter the name and street address, city/town, state, and ZIP code of the permittee. Also provide an email address (if available) and/or a phone number.

PERMIT OR EPA ID NUMBER: Enter the well identification number or permit number assigned to the well by the EPA or the permitting authority.

API NUMBER: Enter the number assigned by the local jurisdiction (usually a State Oil and Gas Agency) using the American Petroleum Institute standard numbering system.

FULL WELL NAME: Enter the full name of the well or project.

Enter the **STATE** and **COUNTY** where the well is located. For States that do not have counties, use the name of that State's equivalent jurisdiction at a more local level.

WELL LOCATION: Fill in the complete township, range, and section to the nearest quarter-quarter section. A township is north or south of the baseline, and a range is east or west of the principal meridian (e.g., T12N, R34W). Also include the distance, in feet, from the nearest north or south line and nearest east or west line of the quarter-section. Also, enter the **latitude** and **longitude** of the well in decimal degrees, to five or six places if possible; be sure to include a negative sign for the longitude of a well in the Western Hemisphere and a negative sign for the latitude of a well in the Southern Hemisphere.

Enter the **WELL CLASS,** i.e., the class of injection well as defined in 40 CFR 144.6.

TIMING OF THE ACTION: Check ***Notice prior to work*** if the activity has not yet occurred (i.e., is planned). Check ***Report after work*** if the activity described has already occurred. As appropriate, include the date the activity is expected to start or the date the activity was completed. (Note this may not be available, e.g., for a plugging plan submitted with a permit application.)

TYPE OF ACTION: Check the appropriate box to describe the kind of activity being reported. Check ***Well Rework*** for work that was/will be performed on the well after it has already been in operation as an injection well. Check ***Plugging and Abandonment*** to report on plans for or descriptions of final closure/plugging after use as an injection well. Check ***Conversion to a Non-Injection Well*** if the well is to be converted to something other than an injection well.

Provide a **NARRATIVE DESCRIPTION** of the work planned to be performed, or that was performed. The narrative should include a description of the main procedures planned or that occurred during the work activity. A service company report, daily report, or similar document may be attached if it includes all the requested information and is clear and legible.

For well reworks, include the following information: The reason for the well rework; depths of activity; type of activity; changes to injection well configuration, well casing, or cement behind casing; any plug added to the well and its depth; any newly drilled interval and its depth; method(s) to demonstrate that the well has mechanical integrity (as applicable); and any deviations from the approved rework plan (as applicable).

For a well plugging plan, include the following information: Reason for the well plugging; number of plugs placed, and their depths; materials used as plugs (e.g., cast iron bridge plug, cement, cement retainer); method to set plugs; and wait-on-cement times, if any. Also provide one or more cost estimates from an independent firm in the business of plugging and abandoning wells to plug the well as described in the plan.

For well plugging affidavit, include the following information: Reason for the well plugging; number of plugs placed, and their depths; materials used as plugs (e.g., cast iron bridge plug, cement, cement retainer); method to set plugs; wait-on-cement times, if any; and any deviations from the approved plugging plan (if applicable).

For conversion to a non-injection well, include the following information: Depths of activity; type of activity; changes to injection well configuration, well casing, or cement behind casing; any plug added to the well and its depth; any newly drilled interval and its depth; depths of new perforations; and method(s) to demonstrate that the well has mechanical integrity (as applicable).

For all of the above activities, include a well sketch depicting the work, results of well tests/logging performed, service company tickets, and any other available information demonstrating how the work was/is to be performed. Also, specify whether depths are below ground surface, relative to Kelly bushing, etc.

CERTIFICATION: This form must be signed and dated by either: a responsible corporate officer for a corporation, by a general partner for a partnership, by the proprietor of a sole proprietorship, or by a principal executive or ranking elected official for a public agency.

PAPERWORK REDUCTION ACT NOTICE: The public reporting and recordkeeping burden for this collection of information is estimated to average between 6.0 and 7.9 hours per response, depending on the injection well class. Burden means the total time, effort, or financial resource expended by persons to generate, maintain, retain, or disclose or provide information to or for a Federal Agency. This includes the time needed to review instructions; develop, acquire, install, and utilize technology and systems for the purposes of collecting, validating, and verifying information, processing and maintaining information, and disclosing and providing information; adjust the existing ways to comply with any previously applicable instructions and requirements; train personnel to be able to respond to the collection of information; search data sources; complete and review the collection of information; and, transmit or otherwise disclose the information. An agency may not conduct or sponsor, and a person is not required to respond to, a collection of information unless it displays a currently valid OMB control number. Send comments on the Agency's need for this information, the accuracy of the provided burden estimates, and any suggested methods for minimizing respondent burden, including the use of automated collection techniques to Director, Collection Strategies Division, U.S. Environmental Protection Agency (2822), 1200 Pennsylvania Ave., NW., Washington, D.C. 20460. Include the OMB control number in any correspondence. Do not send the completed forms to this address.

PROPOSED DESIGN
INJECTION AND RECOVERY WELL

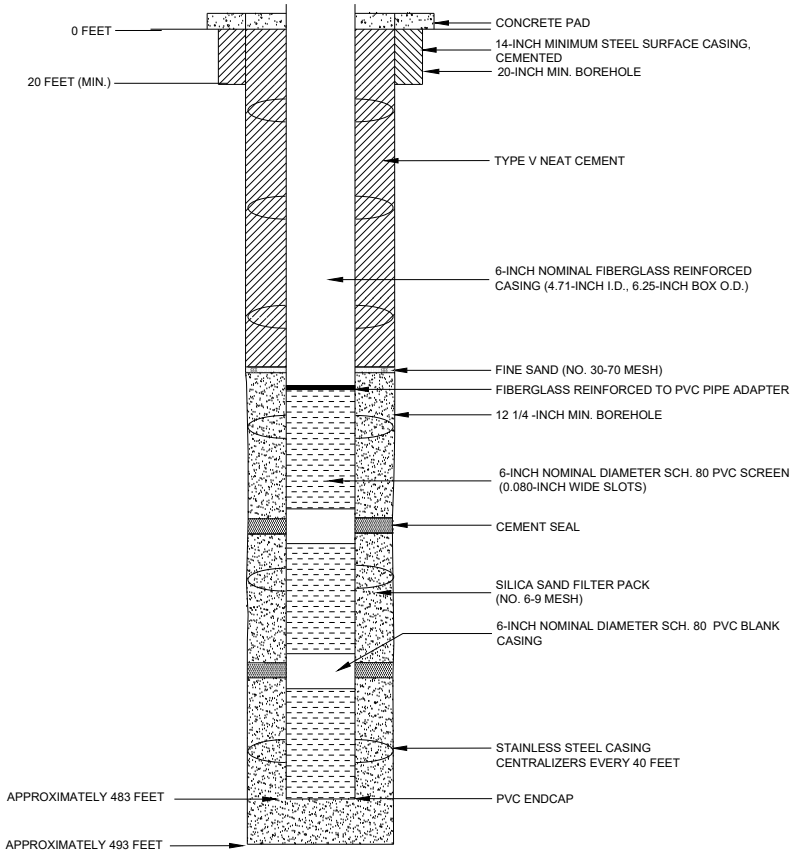

PROPOSED PLUGGING AND
ABANDONMENT
INJECTION AND RECOVERY WELL

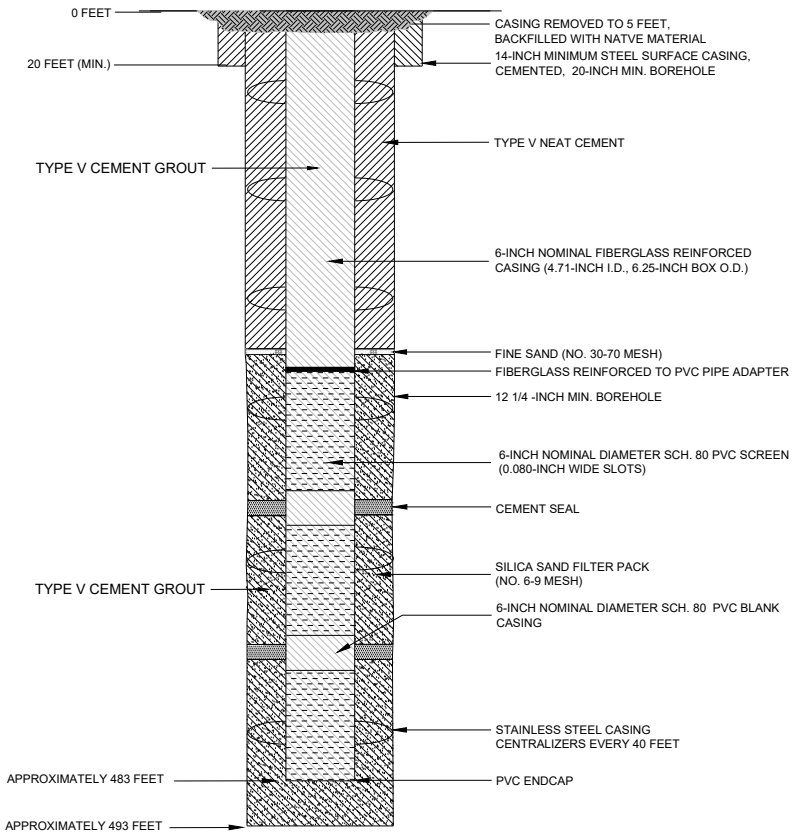

NOTES

1. WELL DESIGN DETAILS ARE BASED ON CORE HOLE AND WELL LOG RECORDS.

HALEY ALDRICH

FLORENCE COPPER, INC.
FLORENCE, ARIZONA

ABANDONMENT SCHEMATIC
RESOURCE BLOCK 31
TYPICAL INJECTION AND
RECOVERY WELL

SCALE: AS SHOWN
JULY 2019

FIGURE E-9

Saved by: MNICHOLLS Printed: 7/25/2019 7:20 PM Sheet: HA-FIG-A-L(2)
\\HALEYALDRICH.COM\SHARE\PHX_COMMON\PROJECTS\FLORENCE COPPER\132473 FLORENCE GROUNDWATER PERMITTING\CAD\132473_000-OBSERVATION_WELL_CONSTRUCTION DIAGRAM.DWG

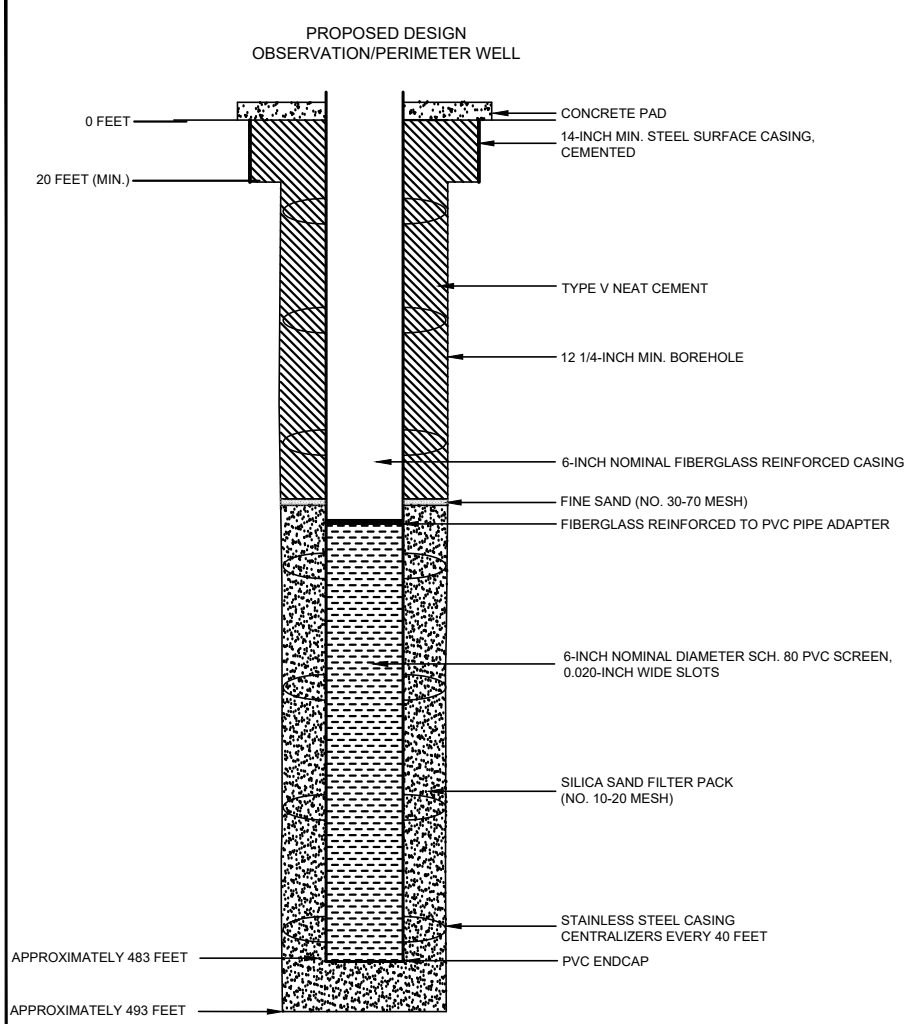

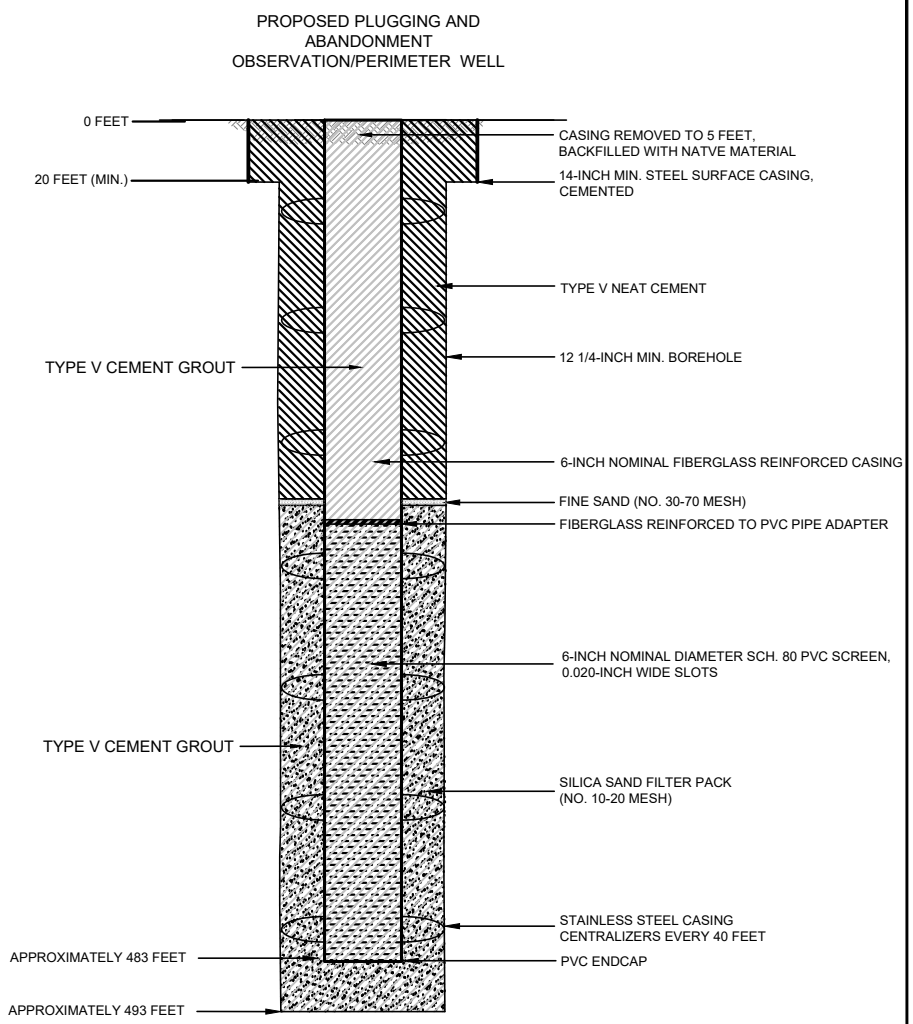

NOTES

1. WELL DESIGN DETAILS ARE BASED ON CORE HOLE AND WELL LOG RECORDS.

HALEY ALDRICH

FLORENCE COPPER, INC.
FLORENCE, ARIZONA

ABANDONMENT SCHEMATIC
RESOURCE BLOCK 31
OBSERVATION/PERIMETER WELL

JULY 2019
SCALE: AS SHOWN

FIGURE E-9b

TABLE E-9
WELLS WITHIN RESOURCE BLOCK 31
FLORENCE COPPER PROJECT
FLORENCE, ARIZONA

Well Number	Easting	Northing	Resource Block	Depth to Top of Bedrock (ft bgs)	Depth to Top of Injection Zone (ft bgs)	Depth to Bottom of Injection Zone (ft bgs)
137	849674	747121	31	341	381	483
139	849816	747121	31	341	381	483
140	849745	747121	31	341	381	483
144	849816	746697	31	341	381	483
152	849745	746838	31	341	381	483
154	849745	746768	31	341	381	483
162	849674	746909	31	341	381	483
163	849745	746909	31	341	381	483
164	849674	746838	31	341	381	483
173	849604	746980	31	341	381	483
174	849674	746980	31	341	381	483
175	849604	746909	31	341	381	483
180	849604	747050	31	341	381	483
181	849533	746980	31	341	381	483
191	849745	747050	31	341	381	483
192	849674	747050	31	341	381	483
193	849816	746980	31	341	381	483
194	849745	746980	31	341	381	483
303	849887	746697	31	341	381	483
327	849887	747121	31	341	381	483
O09	849888	747263	31	341	381	483
O10	849957	747050	31	341	381	483
O11	849957	746838	31	341	381	483
P17	849817	747192	31	341	381	483
P18	849958	747192	31	341	381	483
P19	849887	746980	31	341	381	483
P20	849887	746768	31	341	381	483

Notes:

ft bgs = feet below ground surface

OMB No. 2040-0042 Approval Expires 4/30/2022

United States Environmental Protection Agency

WELL REWORK RECORD, PLUGGING AND ABANDONMENT PLAN, OR PLUGGING AND ABANDONMENT AFFIDAVIT

Name and Address, Phone Number and/or Email of Permittee

Florence Copper Project
1575 W Hunt Hwy,
Florence, AZ 85132

Permit or EPA ID Number	API Number	Full Well Name
R9UIC-AZ3-FY11-1		Block 32 Wells - See Attached Table E-10

State	County
Arizona	Pinal

Locate well in two directions from nearest lines of quarter section and drilling unit

Surface Location

NE 1/4 of SE 1/4 of Section 28 Township 4S Range 9E

_____ ft. from (N/S) _____ Line of quarter section

_____ ft. from (E/W) _____ Line of quarter section.

Latitude 33.051705

Longitude -111.425358

See Attached Table for Individual Well Coordinates.

Well Class	Timing of Action (pick one)	Type of Action (pick one)
☐ Class I ☐ Class II ☑ Class III ☐ Class V	☑ Notice Prior to Work Date Expected to Commence January 2027 ☐ Report After Work Date Work Ended	☐ Well Rework ☑ Plugging and Abandonment ☐ Conversion to a Non-Injection Well

Provide a narrative description of the work planned to be performed, or that was performed. Use additional pages as necessary. See instructions.

This plugging and abandonment applies to wells Class III wells to be constructed in block 32 There are 1 Class III multi-use injection/ recovery wells, 2 dedicated Class III observation, and 3 Class III perimeter wells planned for construction in this block. The injection and recovery wells will be of uniform design, and will be used for injection and recovery on an alternate basis. Some of the injection and recovery wells will be used as perimeter and observation wells prior to well field build-out. The dedicated perimeter observation well will have a design and depth similar to the injection and recovery wells, but will not have a segmented well screen.

The work performed includes plugging and abandonment of the Class III wells in resource block 32. Plugging and abandonment will be accomplished following procedures defined in Attachment E of the application. Plugging and abandonment details are shown on the attached Figures E-10a and E-10b.

Certification

I certify under the penalty of law that I have personally examined and am familiar with the information submitted in this document and all attachments and that, based on my inquiry of those individuals immediately responsible for obtaining the information, I believe that the information is true, accurate, and complete. I am aware that there are significant penalties for submitting false information, including the possibliity of fine and imprisonment. (Ref. 40 CFR § 144.32)

Name and Official Title *(Please type or print)*	Signature	Date Signed
Dan Johnson, VP - General Manager		10/3/2019

INSTRUCTIONS FOR FORM 7520-19

This form replaces forms 7520-12 and 7520-14. Use this form only when work is planned or has occurred that affects the well's construction or operation as an injection well, including work on the casing, tubing or packer (or for shallow Class V wells, the subsurface fluid emplacement network). Use one form per injection well. While reports or other information developed by contractors or service companies may be attached, this form must be signed by a responsible entity as described at 40 CFR 144.32. Note: operators closing Class V wells should use Form 7520-17.

NAME, ADDRESS, PHONE AND/OR EMAIL OF PERMITTEE: Enter the name and street address, city/town, state, and ZIP code of the permittee. Also provide an email address (if available) and/or a phone number.

PERMIT OR EPA ID NUMBER: Enter the well identification number or permit number assigned to the well by the EPA or the permitting authority.

API NUMBER: Enter the number assigned by the local jurisdiction (usually a State Oil and Gas Agency) using the American Petroleum Institute standard numbering system.

FULL WELL NAME: Enter the full name of the well or project.

Enter the **STATE** and **COUNTY** where the well is located. For States that do not have counties, use the name of that State's equivalent jurisdiction at a more local level.

WELL LOCATION: Fill in the complete township, range, and section to the nearest quarter-quarter section. A township is north or south of the baseline, and a range is east or west of the principal meridian (e.g., T12N, R34W). Also include the distance, in feet, from the nearest north or south line and nearest east or west line of the quarter-section. Also, enter the **latitude** and **longitude** of the well in decimal degrees, to five or six places if possible; be sure to include a negative sign for the longitude of a well in the Western Hemisphere and a negative sign for the latitude of a well in the Southern Hemisphere.

Enter the **WELL CLASS,** i.e., the class of injection well as defined in 40 CFR 144.6.

TIMING OF THE ACTION: Check ***Notice prior to work*** if the activity has not yet occurred (i.e., is planned). Check ***Report after work*** if the activity described has already occurred. As appropriate, include the date the activity is expected to start or the date the activity was completed. (Note this may not be available, e.g., for a plugging plan submitted with a permit application.)

TYPE OF ACTION: Check the appropriate box to describe the kind of activity being reported. Check ***Well Rework*** for work that was/will be performed on the well after it has already been in operation as an injection well. Check ***Plugging and Abandonment*** to report on plans for or descriptions of final closure/plugging after use as an injection well. Check ***Conversion to a Non-Injection Well*** if the well is to be converted to something other than an injection well.

Provide a **NARRATIVE DESCRIPTION** of the work planned to be performed, or that was performed. The narrative should include a description of the main procedures planned or that occurred during the work activity. A service company report, daily report, or similar document may be attached if it includes all the requested information and is clear and legible.

For well reworks, include the following information: The reason for the well rework; depths of activity; type of activity; changes to injection well configuration, well casing, or cement behind casing; any plug added to the well and its depth; any newly drilled interval and its depth; method(s) to demonstrate that the well has mechanical integrity (as applicable); and any deviations from the approved rework plan (as applicable).

For a well plugging plan, include the following information: Reason for the well plugging; number of plugs placed, and their depths; materials used as plugs (e.g., cast iron bridge plug, cement, cement retainer); method to set plugs; and wait-on-cement times, if any. Also provide one or more cost estimates from an independent firm in the business of plugging and abandoning wells to plug the well as described in the plan.

For well plugging affidavit, include the following information: Reason for the well plugging; number of plugs placed, and their depths; materials used as plugs (e.g., cast iron bridge plug, cement, cement retainer); method to set plugs; wait-on-cement times, if any; and any deviations from the approved plugging plan (if applicable).

For conversion to a non-injection well, include the following information: Depths of activity; type of activity; changes to injection well configuration, well casing, or cement behind casing; any plug added to the well and its depth; any newly drilled interval and its depth; depths of new perforations; and method(s) to demonstrate that the well has mechanical integrity (as applicable).

For all of the above activities, include a well sketch depicting the work, results of well tests/logging performed, service company tickets, and any other available information demonstrating how the work was/is to be performed. Also, specify whether depths are below ground surface, relative to Kelly bushing, etc.

CERTIFICATION: This form must be signed and dated by either: a responsible corporate officer for a corporation, by a general partner for a partnership, by the proprietor of a sole proprietorship, or by a principal executive or ranking elected official for a public agency.

PAPERWORK REDUCTION ACT NOTICE: The public reporting and recordkeeping burden for this collection of information is estimated to average between 6.0 and 7.9 hours per response, depending on the injection well class. Burden means the total time, effort, or financial resource expended by persons to generate, maintain, retain, or disclose or provide information to or for a Federal Agency. This includes the time needed to review instructions; develop, acquire, install, and utilize technology and systems for the purposes of collecting, validating, and verifying information, processing and maintaining information, and disclosing and providing information; adjust the existing ways to comply with any previously applicable instructions and requirements; train personnel to be able to respond to the collection of information; search data sources; complete and review the collection of information; and, transmit or otherwise disclose the information. An agency may not conduct or sponsor, and a person is not required to respond to, a collection of information unless it displays a currently valid OMB control number. Send comments on the Agency's need for this information, the accuracy of the provided burden estimates, and any suggested methods for minimizing respondent burden, including the use of automated collection techniques to Director, Collection Strategies Division, U.S. Environmental Protection Agency (2822), 1200 Pennsylvania Ave., NW., Washington, D.C. 20460. Include the OMB control number in any correspondence. Do not send the completed forms to this address.

PROPOSED DESIGN
INJECTION AND RECOVERY WELL

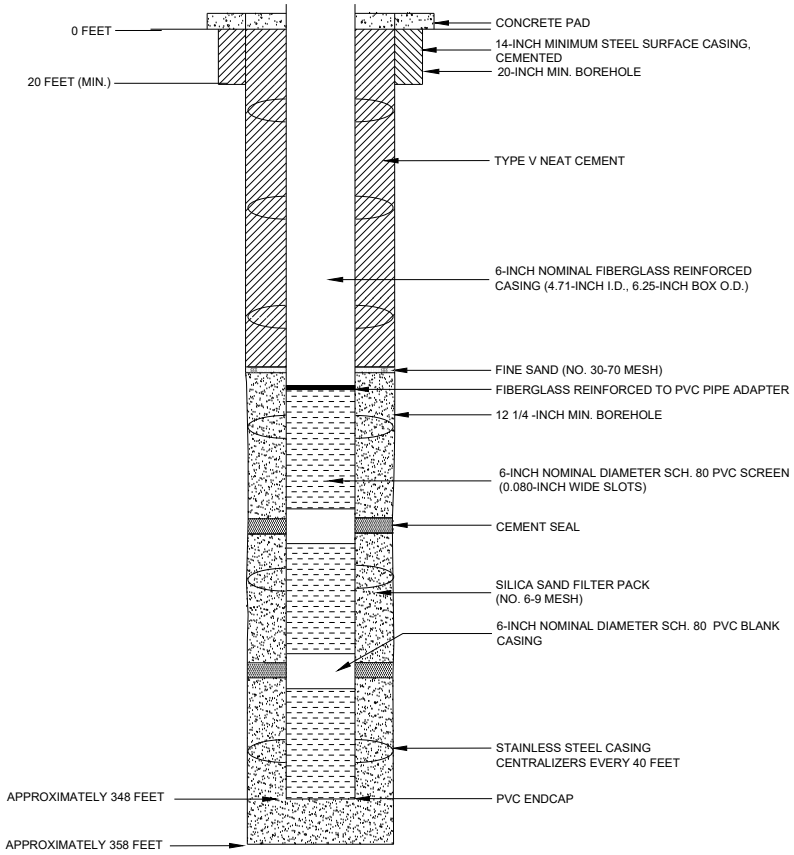

PROPOSED PLUGGING AND
ABANDONMENT
INJECTION AND RECOVERY WELL

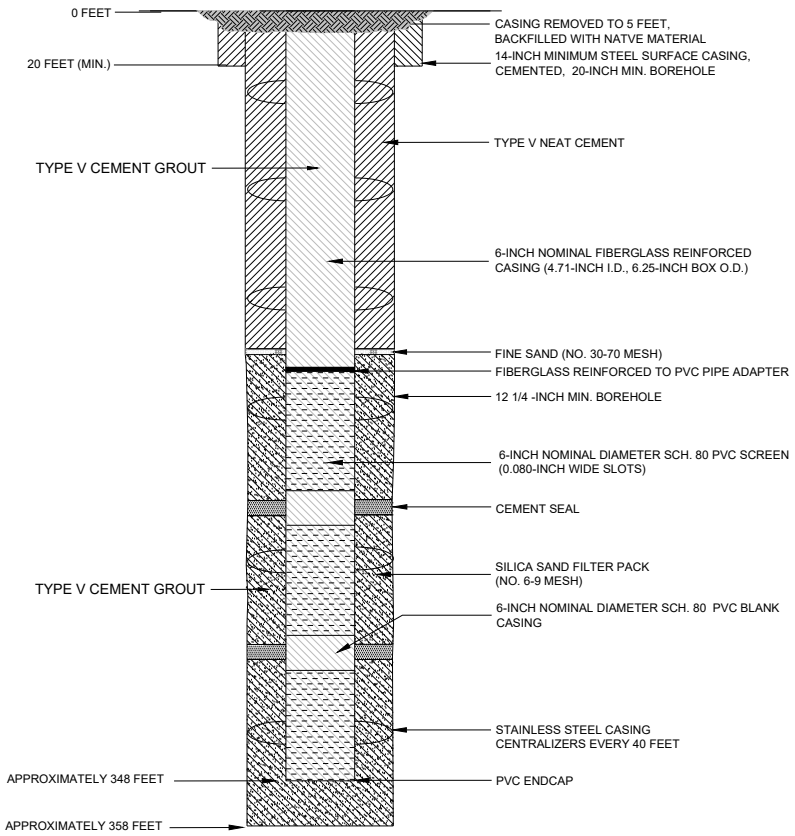

NOTES

1. WELL DESIGN DETAILS ARE BASED ON CORE HOLE AND WELL LOG RECORDS.

HALEY ALDRICH

FLORENCE COPPER, INC.
FLORENCE, ARIZONA

ABANDONMENT SCHEMATIC
RESOURCE BLOCK 32
TYPICAL INJECTION AND
RECOVERY WELL

SCALE: AS SHOWN
JULY 2019

FIGURE E-10a

Saved by: MNICHOLLS Printed: 7/25/2019 7:20 PM Sheet: HA-FIG-A-L(2)
\\HALEYALDRICH.COM\SHARE\PHX_COMMON\PROJECTS\FLORENCE COPPER\132473 FLORENCE GROUNDWATER PERMITTING\CAD\132473_000-OBSERVATION_WELL_CONSTRUCTION DIAGRAM.DWG

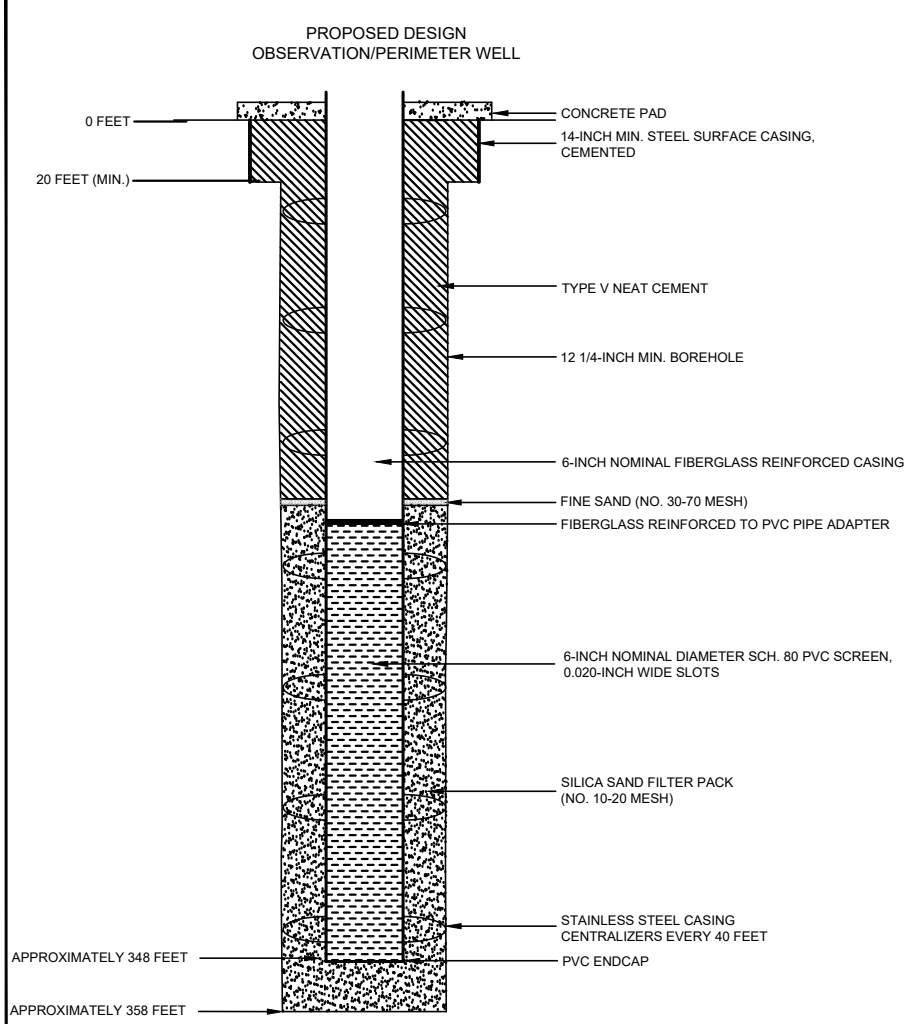

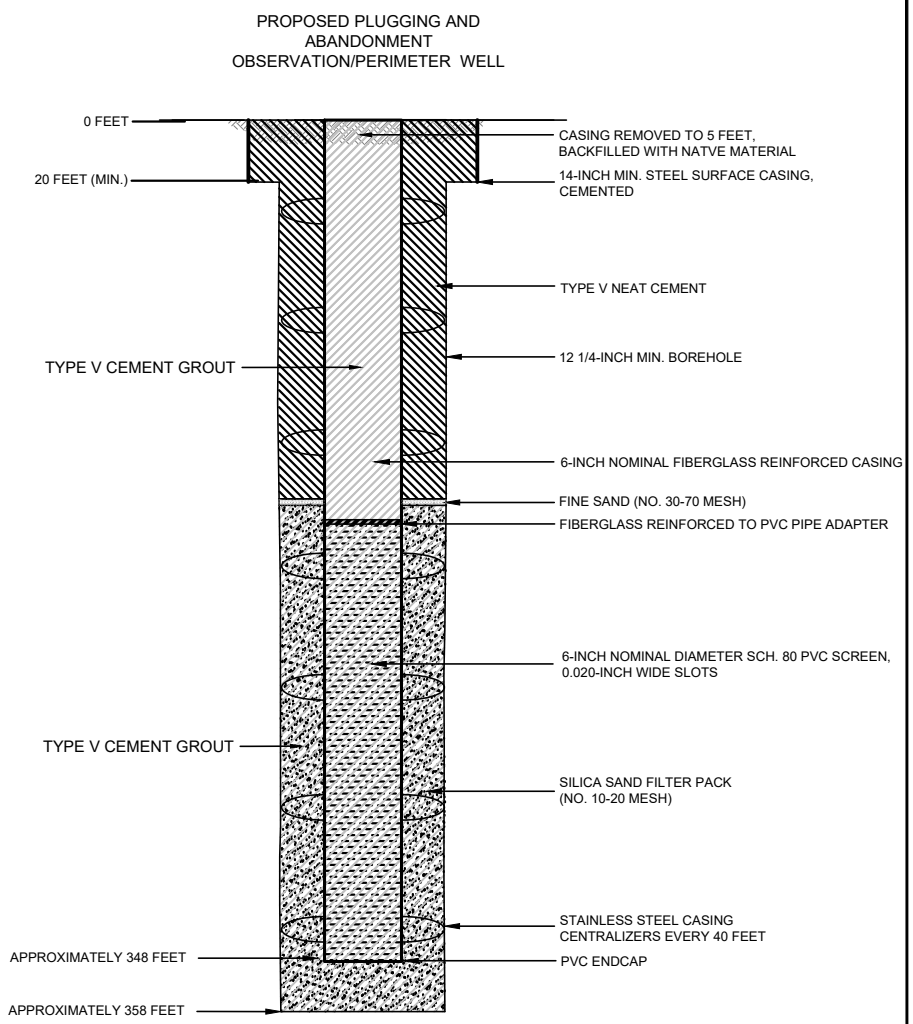

NOTES

1. WELL DESIGN DETAILS ARE BASED ON CORE HOLE AND WELL LOG RECORDS.

HALEY ALDRICH

FLORENCE COPPER, INC.
FLORENCE, ARIZONA

ABANDONMENT SCHEMATIC
RESOURCE BLOCK 32
OBSERVATION/PERIMETER WELL

JULY 2019
SCALE: AS SHOWN

FIGURE E-10b

TABLE E-10
WELLS WITHIN RESOURCE BLOCK 32
FLORENCE COPPER PROJECT
FLORENCE, ARIZONA

Well Number	Easting	Northing	Resource Block	Depth to Top of Bedrock (ft bgs)	Depth to Top of Injection Zone (ft bgs)	Depth to Bottom of Injection Zone (ft bgs)
326	850523	746697	32	348	388	491
O13	850523	746838	32	348	388	491
O14	850664	746626	32	348	388	491
P24	850452	746768	32	348	388	491
P25	850594	746768	32	348	388	491
P26	850594	746697	32	348	388	491

Notes:

ft bgs = feet below ground surface

Based on depths in block 40

OMB No. 2040-0042 Approval Expires 4/30/2022

United States Environmental Protection Agency

WELL REWORK RECORD, PLUGGING AND ABANDONMENT PLAN, OR PLUGGING AND ABANDONMENT AFFIDAVIT

Name and Address, Phone Number and/or Email of Permittee

Florence Copper Project
1575 W Hunt Hwy,
Florence, AZ 85132

Permit or EPA ID Number	API Number	Full Well Name
R9UIC-AZ3-FY11-1		Block 36 Wells - See Attached Table E-11

State	County
Arizona	Pinal

Locate well in two directions from nearest lines of quarter section and drilling unit

Surface Location

NW 1/4 of SW 1/4 of Section 28 Township 4S Range 9E

_____ ft. from (N/S) _____ Line of quarter section

_____ ft. from (E/W) _____ Line of quarter section.

Latitude 33.051514

Longitude -111.435765

See Attached Table for Individual Well Coordinates.

Well Class	Timing of Action (pick one)	Type of Action (pick one)
☐ Class I ☐ Class II ☑ Class III ☐ Class V	☑ Notice Prior to Work Date Expected to Commence January 2027 ☐ Report After Work Date Work Ended	☐ Well Rework ☑ Plugging and Abandonment ☐ Conversion to a Non-Injection Well

Provide a narrative description of the work planned to be performed, or that was performed. Use additional pages as necessary. See instructions.

This plugging and abandonment applies to wells Class III wells to be constructed in block 36. There are 50 Class III multi-use injection/ recovery wells, planned for construction in this block. The injection and recovery wells will be of uniform design, and will be used for injection and recovery on an alternate basis. Some of the injection and recovery wells will be used as perimeter and observation wells prior to well field build-out.

The work performed includes plugging and abandonment of the Class III wells in resource block 36. Plugging and abandonment will be accomplished following procedures defined in Attachment E of the application. Plugging and abandonment details are shown on the attached Figure E-11.

Certification

I certify under the penalty of law that I have personally examined and am familiar with the information submitted in this document and all attachments and that, based on my inquiry of those individuals immediately responsible for obtaining the information, I believe that the information is true, accurate, and complete. I am aware that there are significant penalties for submitting false information, including the possibliity of fine and imprisonment. (Ref. 40 CFR § 144.32)

Name and Official Title *(Please type or print)*	Signature	Date Signed
Dan Johnson, VP - General Manager		10/3/2019

INSTRUCTIONS FOR FORM 7520-19

This form replaces forms 7520-12 and 7520-14. Use this form only when work is planned or has occurred that affects the well's construction or operation as an injection well, including work on the casing, tubing or packer (or for shallow Class V wells, the subsurface fluid emplacement network). Use one form per injection well. While reports or other information developed by contractors or service companies may be attached, this form must be signed by a responsible entity as described at 40 CFR 144.32. Note: operators closing Class V wells should use Form 7520-17.

NAME, ADDRESS, PHONE AND/OR EMAIL OF PERMITTEE: Enter the name and street address, city/town, state, and ZIP code of the permittee. Also provide an email address (if available) and/or a phone number.

PERMIT OR EPA ID NUMBER: Enter the well identification number or permit number assigned to the well by the EPA or the permitting authority.

API NUMBER: Enter the number assigned by the local jurisdiction (usually a State Oil and Gas Agency) using the American Petroleum Institute standard numbering system.

FULL WELL NAME: Enter the full name of the well or project.

Enter the **STATE** and **COUNTY** where the well is located. For States that do not have counties, use the name of that State's equivalent jurisdiction at a more local level.

WELL LOCATION: Fill in the complete township, range, and section to the nearest quarter-quarter section. A township is north or south of the baseline, and a range is east or west of the principal meridian (e.g., T12N, R34W). Also include the distance, in feet, from the nearest north or south line and nearest east or west line of the quarter-section. Also, enter the **latitude** and **longitude** of the well in decimal degrees, to five or six places if possible; be sure to include a negative sign for the longitude of a well in the Western Hemisphere and a negative sign for the latitude of a well in the Southern Hemisphere.

Enter the **WELL CLASS,** i.e., the class of injection well as defined in 40 CFR 144.6.

TIMING OF THE ACTION: Check ***Notice prior to work*** if the activity has not yet occurred (i.e., is planned). Check ***Report after work*** if the activity described has already occurred. As appropriate, include the date the activity is expected to start or the date the activity was completed. (Note this may not be available, e.g., for a plugging plan submitted with a permit application.)

TYPE OF ACTION: Check the appropriate box to describe the kind of activity being reported. Check ***Well Rework*** for work that was/will be performed on the well after it has already been in operation as an injection well. Check ***Plugging and Abandonment*** to report on plans for or descriptions of final closure/plugging after use as an injection well. Check ***Conversion to a Non-Injection Well*** if the well is to be converted to something other than an injection well.

Provide a **NARRATIVE DESCRIPTION** of the work planned to be performed, or that was performed. The narrative should include a description of the main procedures planned or that occurred during the work activity. A service company report, daily report, or similar document may be attached if it includes all the requested information and is clear and legible.

For well reworks, include the following information: The reason for the well rework; depths of activity; type of activity; changes to injection well configuration, well casing, or cement behind casing; any plug added to the well and its depth; any newly drilled interval and its depth; method(s) to demonstrate that the well has mechanical integrity (as applicable); and any deviations from the approved rework plan (as applicable).

For a well plugging plan, include the following information: Reason for the well plugging; number of plugs placed, and their depths; materials used as plugs (e.g., cast iron bridge plug, cement, cement retainer); method to set plugs; and wait-on-cement times, if any. Also provide one or more cost estimates from an independent firm in the business of plugging and abandoning wells to plug the well as described in the plan.

For well plugging affidavit, include the following information: Reason for the well plugging; number of plugs placed, and their depths; materials used as plugs (e.g., cast iron bridge plug, cement, cement retainer); method to set plugs; wait-on-cement times, if any; and any deviations from the approved plugging plan (if applicable).

For conversion to a non-injection well, include the following information: Depths of activity; type of activity; changes to injection well configuration, well casing, or cement behind casing; any plug added to the well and its depth; any newly drilled interval and its depth; depths of new perforations; and method(s) to demonstrate that the well has mechanical integrity (as applicable).

For all of the above activities, include a well sketch depicting the work, results of well tests/logging performed, service company tickets, and any other available information demonstrating how the work was/is to be performed. Also, specify whether depths are below ground surface, relative to Kelly bushing, etc.

CERTIFICATION: This form must be signed and dated by either: a responsible corporate officer for a corporation, by a general partner for a partnership, by the proprietor of a sole proprietorship, or by a principal executive or ranking elected official for a public agency.

PAPERWORK REDUCTION ACT NOTICE: The public reporting and recordkeeping burden for this collection of information is estimated to average between 6.0 and 7.9 hours per response, depending on the injection well class. Burden means the total time, effort, or financial resource expended by persons to generate, maintain, retain, or disclose or provide information to or for a Federal Agency. This includes the time needed to review instructions; develop, acquire, install, and utilize technology and systems for the purposes of collecting, validating, and verifying information, processing and maintaining information, and disclosing and providing information; adjust the existing ways to comply with any previously applicable instructions and requirements; train personnel to be able to respond to the collection of information; search data sources; complete and review the collection of information; and, transmit or otherwise disclose the information. An agency may not conduct or sponsor, and a person is not required to respond to, a collection of information unless it displays a currently valid OMB control number. Send comments on the Agency's need for this information, the accuracy of the provided burden estimates, and any suggested methods for minimizing respondent burden, including the use of automated collection techniques to Director, Collection Strategies Division, U.S. Environmental Protection Agency (2822), 1200 Pennsylvania Ave., NW., Washington, D.C. 20460. Include the OMB control number in any correspondence. Do not send the completed forms to this address.

PROPOSED DESIGN
INJECTION AND RECOVERY WELL

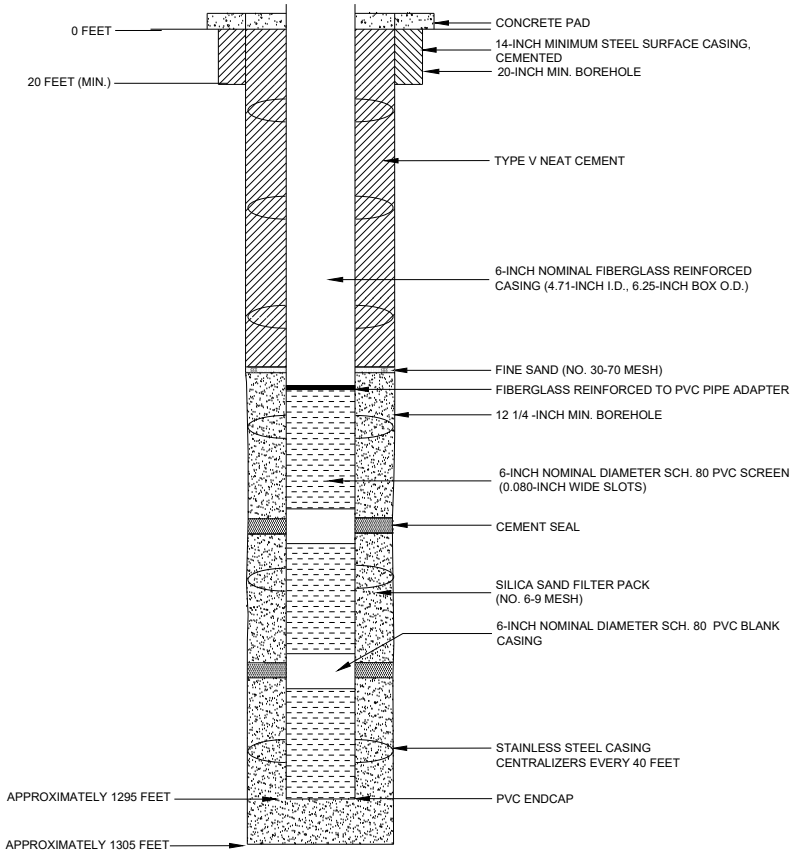

PROPOSED PLUGGING AND
ABANDONMENT
INJECTION AND RECOVERY WELL

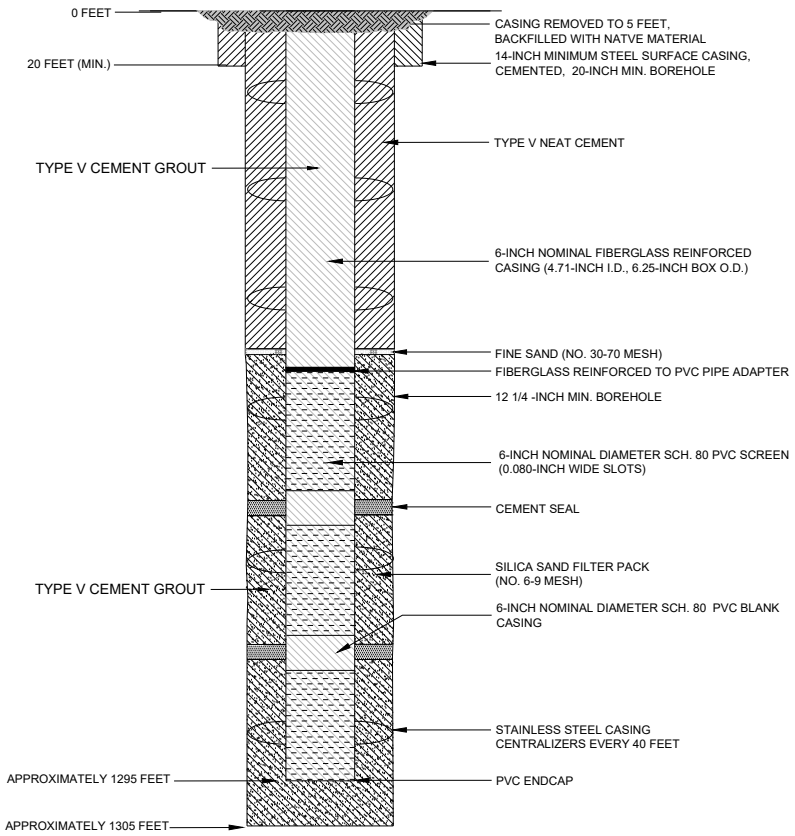

NOTES

1. WELL DESIGN DETAILS ARE BASED ON CORE HOLE AND WELL LOG RECORDS.

HALEY ALDRICH

FLORENCE COPPER, INC.
FLORENCE, ARIZONA

ABANDONMENT SCHEMATIC
RESOURCE BLOCK 36
TYPICAL INJECTION AND
RECOVERY WELL

SCALE: AS SHOWN
JULY 2019

FIGURE E-11

TABLE E-11
WELLS WITHIN RESOURCE BLOCK 36
FLORENCE COPPER PROJECT
FLORENCE, ARIZONA

Well Number	Easting	Northing	Resource Block	Depth to Top of Bedrock (ft bgs)	Depth to Top of Injection Zone (ft bgs)	Depth to Bottom of Injection Zone (ft bgs)
514	847624	746556	36	496	536	1295
515	847624	746626	36	496	536	1295
516	847695	746626	36	496	536	1295
518	847553	746555	36	496	536	1295
520	847412	746343	36	496	536	1295
521	847412	746414	36	496	536	1295
522	847341	746343	36	496	536	1295
523	847553	746485	36	496	536	1295
524	847483	746485	36	496	536	1295
525	847483	746414	36	496	536	1295
572	847553	746697	36	496	536	1295
573	847553	746768	36	496	536	1295
574	847483	746838	36	496	536	1295
576	847483	746768	36	496	536	1295
577	847412	746909	36	496	536	1295
579	847412	746838	36	496	536	1295
582	847341	746909	36	496	536	1295
592	847624	746697	36	496	536	1295
715	847483	746697	36	496	536	1295
716	847412	746768	36	496	536	1295
717	847341	746838	36	496	536	1295
726	847412	746555	36	496	536	1295
727	847483	746626	36	496	536	1295
728	847412	746626	36	496	536	1295
729	847341	746555	36	496	536	1295
730	847200	746555	36	496	536	1295
731	847270	746626	36	496	536	1295
732	847341	746697	36	496	536	1295
733	847412	746697	36	496	536	1295
734	847341	746626	36	496	536	1295
735	847270	746555	36	496	536	1295
736	847129	746626	36	496	536	1295
737	847200	746697	36	496	536	1295
738	847270	746768	36	496	536	1295
774	847553	746626	36	496	536	1295
773	847412	746485	36	496	536	1295
765	847200	746485	36	496	536	1295
764	847270	746485	36	496	536	1295
756	847270	746414	36	496	536	1295

TABLE E-11
WELLS WITHIN RESOURCE BLOCK 36
FLORENCE COPPER PROJECT
FLORENCE, ARIZONA

Well Number	Easting	Northing	Resource Block	Depth to Top of Bedrock (ft bgs)	Depth to Top of Injection Zone (ft bgs)	Depth to Bottom of Injection Zone (ft bgs)
755	847341	746485	36	496	536	1295
754	847341	746414	36	496	536	1295
749	847483	746555	36	496	536	1295
746	847058	746626	36	496	536	1295
745	847129	746697	36	496	536	1295
744	847200	746768	36	496	536	1295
743	847270	746838	36	496	536	1295
742	847129	746555	36	496	536	1295
741	847200	746626	36	496	536	1295
740	847270	746697	36	496	536	1295
739	847341	746768	36	496	536	1295

Notes:

ft bgs = feet below ground surface

OMB No. 2040-0042 Approval Expires 4/30/2022

United States Environmental Protection Agency

WELL REWORK RECORD, PLUGGING AND ABANDONMENT PLAN, OR PLUGGING AND ABANDONMENT AFFIDAVIT

Name and Address, Phone Number and/or Email of Permittee

Florence Copper Project
1575 W Hunt Hwy,
Florence, AZ 85132

Permit or EPA ID Number	API Number	Full Well Name
R9UIC-AZ3-FY11-1		Block 37 Wells - See Attached Table E-12

State	County
Arizona	Pinal

Locate well in two directions from nearest lines of quarter section and drilling unit

Surface Location

NE 1/4 of SW 1/4 of Section 28 Township 4S Range 9E

_____ ft. from (N/S) _____ Line of quarter section

_____ ft. from (E/W) _____ Line of quarter section.

Latitude 33.051518

Longitude -111.433408

See Attached Table for Individual Well Coordinates.

Well Class	Timing of Action (pick one)	Type of Action (pick one)
☐ Class I ☐ Class II ☑ Class III ☐ Class V	☑ Notice Prior to Work Date Expected to Commence January 2027 ☐ Report After Work Date Work Ended	☐ Well Rework ☑ Plugging and Abandonment ☐ Conversion to a Non-Injection Well

Provide a narrative description of the work planned to be performed, or that was performed. Use additional pages as necessary. See instructions.

This plugging and abandonment applies to wells Class III wells to be constructed in block 37. There are 49 Class III multi-use injection/ recovery wells, planned for construction in this block. The injection and recovery wells will be of uniform design, and will be used for injection and recovery on an alternate basis. Some of the injection and recovery wells will be used as perimeter and observation wells prior to well field build-out.

The work performed includes plugging and abandonment of the Class III wells in resource block 37. Plugging and abandonment will be accomplished following procedures defined in Attachment E of the application. Plugging and abandonment details are shown on the attached Figure E-12.

Certification

I certify under the penalty of law that I have personally examined and am familiar with the information submitted in this document and all attachments and that, based on my inquiry of those individuals immediately responsible for obtaining the information, I believe that the information is true, accurate, and complete. I am aware that there are significant penalties for submitting false information, including the possibliity of fine and imprisonment. (Ref. 40 CFR § 144.32)

Name and Official Title *(Please type or print)*	Signature	Date Signed
Dan Johnson, VP - General Manager		10/3/2019

INSTRUCTIONS FOR FORM 7520-19

This form replaces forms 7520-12 and 7520-14. Use this form only when work is planned or has occurred that affects the well's construction or operation as an injection well, including work on the casing, tubing or packer (or for shallow Class V wells, the subsurface fluid emplacement network). Use one form per injection well. While reports or other information developed by contractors or service companies may be attached, this form must be signed by a responsible entity as described at 40 CFR 144.32. Note: operators closing Class V wells should use Form 7520-17.

NAME, ADDRESS, PHONE AND/OR EMAIL OF PERMITTEE: Enter the name and street address, city/town, state, and ZIP code of the permittee. Also provide an email address (if available) and/or a phone number.

PERMIT OR EPA ID NUMBER: Enter the well identification number or permit number assigned to the well by the EPA or the permitting authority.

API NUMBER: Enter the number assigned by the local jurisdiction (usually a State Oil and Gas Agency) using the American Petroleum Institute standard numbering system.

FULL WELL NAME: Enter the full name of the well or project.

Enter the **STATE** and **COUNTY** where the well is located. For States that do not have counties, use the name of that State's equivalent jurisdiction at a more local level.

WELL LOCATION: Fill in the complete township, range, and section to the nearest quarter-quarter section. A township is north or south of the baseline, and a range is east or west of the principal meridian (e.g., T12N, R34W). Also include the distance, in feet, from the nearest north or south line and nearest east or west line of the quarter-section. Also, enter the **latitude** and **longitude** of the well in decimal degrees, to five or six places if possible; be sure to include a negative sign for the longitude of a well in the Western Hemisphere and a negative sign for the latitude of a well in the Southern Hemisphere.

Enter the **WELL CLASS,** i.e., the class of injection well as defined in 40 CFR 144.6.

TIMING OF THE ACTION: Check ***Notice prior to work*** if the activity has not yet occurred (i.e., is planned). Check ***Report after work*** if the activity described has already occurred. As appropriate, include the date the activity is expected to start or the date the activity was completed. (Note this may not be available, e.g., for a plugging plan submitted with a permit application.)

TYPE OF ACTION: Check the appropriate box to describe the kind of activity being reported. Check ***Well Rework*** for work that was/will be performed on the well after it has already been in operation as an injection well. Check ***Plugging and Abandonment*** to report on plans for or descriptions of final closure/plugging after use as an injection well. Check ***Conversion to a Non-Injection Well*** if the well is to be converted to something other than an injection well.

Provide a **NARRATIVE DESCRIPTION** of the work planned to be performed, or that was performed. The narrative should include a description of the main procedures planned or that occurred during the work activity. A service company report, daily report, or similar document may be attached if it includes all the requested information and is clear and legible.

For well reworks, include the following information: The reason for the well rework; depths of activity; type of activity; changes to injection well configuration, well casing, or cement behind casing; any plug added to the well and its depth; any newly drilled interval and its depth; method(s) to demonstrate that the well has mechanical integrity (as applicable); and any deviations from the approved rework plan (as applicable).

For a well plugging plan, include the following information: Reason for the well plugging; number of plugs placed, and their depths; materials used as plugs (e.g., cast iron bridge plug, cement, cement retainer); method to set plugs; and wait-on-cement times, if any. Also provide one or more cost estimates from an independent firm in the business of plugging and abandoning wells to plug the well as described in the plan.

For well plugging affidavit, include the following information: Reason for the well plugging; number of plugs placed, and their depths; materials used as plugs (e.g., cast iron bridge plug, cement, cement retainer); method to set plugs; wait-on-cement times, if any; and any deviations from the approved plugging plan (if applicable).

For conversion to a non-injection well, include the following information: Depths of activity; type of activity; changes to injection well configuration, well casing, or cement behind casing; any plug added to the well and its depth; any newly drilled interval and its depth; depths of new perforations; and method(s) to demonstrate that the well has mechanical integrity (as applicable).

For all of the above activities, include a well sketch depicting the work, results of well tests/logging performed, service company tickets, and any other available information demonstrating how the work was/is to be performed. Also, specify whether depths are below ground surface, relative to Kelly bushing, etc.

CERTIFICATION: This form must be signed and dated by either: a responsible corporate officer for a corporation, by a general partner for a partnership, by the proprietor of a sole proprietorship, or by a principal executive or ranking elected official for a public agency.

PAPERWORK REDUCTION ACT NOTICE: The public reporting and recordkeeping burden for this collection of information is estimated to average between 6.0 and 7.9 hours per response, depending on the injection well class. Burden means the total time, effort, or financial resource expended by persons to generate, maintain, retain, or disclose or provide information to or for a Federal Agency. This includes the time needed to review instructions; develop, acquire, install, and utilize technology and systems for the purposes of collecting, validating, and verifying information, processing and maintaining information, and disclosing and providing information; adjust the existing ways to comply with any previously applicable instructions and requirements; train personnel to be able to respond to the collection of information; search data sources; complete and review the collection of information; and, transmit or otherwise disclose the information. An agency may not conduct or sponsor, and a person is not required to respond to, a collection of information unless it displays a currently valid OMB control number. Send comments on the Agency's need for this information, the accuracy of the provided burden estimates, and any suggested methods for minimizing respondent burden, including the use of automated collection techniques to Director, Collection Strategies Division, U.S. Environmental Protection Agency (2822), 1200 Pennsylvania Ave., NW., Washington, D.C. 20460. Include the OMB control number in any correspondence. Do not send the completed forms to this address.

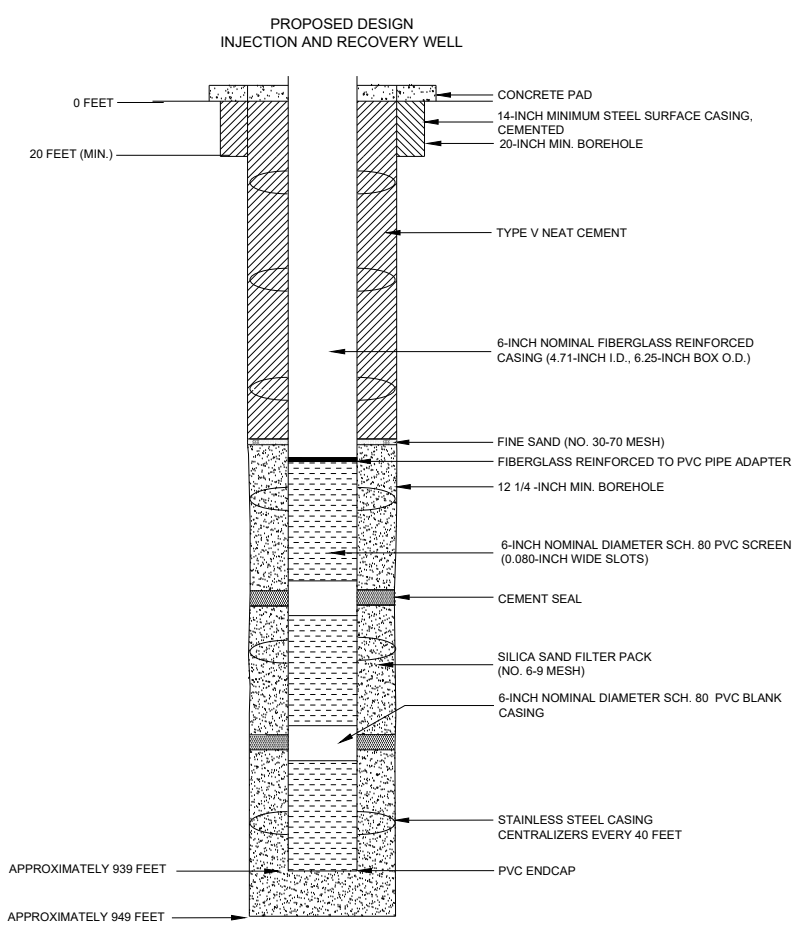

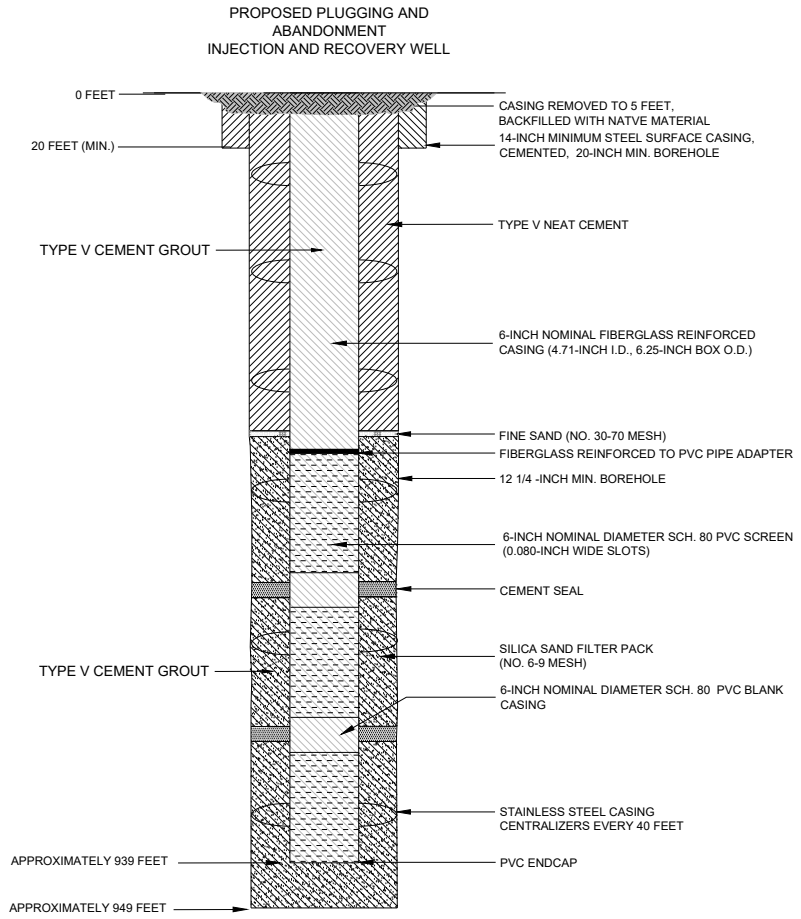

NOTES

1. WELL DESIGN DETAILS ARE BASED ON CORE HOLE AND WELL LOG RECORDS.

HALEY ALDRICH

FLORENCE COPPER, INC.
FLORENCE, ARIZONA

ABANDONMENT SCHEMATIC
RESOURCE BLOCK 37
TYPICAL INJECTION AND RECOVERY WELL

SCALE: AS SHOWN
JULY 2019

FIGURE E-12

TABLE E-12
WELLS WITHIN RESOURCE BLOCK 37
FLORENCE COPPER PROJECT
FLORENCE, ARIZONA

Well Number	Easting	Northing	Resource Block	Depth to Top of Bedrock (ft bgs)	Depth to Top of Injection Zone (ft bgs)	Depth to Bottom of Injection Zone (ft bgs)
333	848260	746556	37	496	536	939
334	848260	746485	37	496	536	939
335	848190	746485	37	496	536	939
336	848190	746414	37	496	536	939
337	848119	746343	37	496	536	939
338	848048	746343	37	496	536	939
339	848119	746414	37	496	536	939
538	847836	746555	37	496	536	939
540	847765	746626	37	496	536	939
561	847907	746485	37	496	536	939
563	847977	746414	37	496	536	939
636	847977	746697	37	496	536	939
637	847978	746768	37	496	536	939
638	847907	746697	37	496	536	939
639	847978	746838	37	496	536	939
640	847907	746768	37	496	536	939
641	847977	746626	37	496	536	939
642	848315	746556	37	496	536	939
644	848260	746626	37	496	536	939
645	848331	746697	37	496	536	939
648	848331	746626	37	496	536	939
649	848190	746697	37	496	536	939
650	848260	746768	37	496	536	939
658	848260	746697	37	496	536	939
659	848190	746626	37	496	536	939
664	848190	746768	37	496	536	939
665	848119	746697	37	496	536	939
666	848119	746768	37	496	536	939
667	848190	746838	37	496	536	939
673	848119	746838	37	496	536	939
674	848048	746768	37	496	536	939
675	848190	746556	37	496	536	939
676	848048	746556	37	496	536	939
677	848119	746556	37	496	536	939
678	848119	746626	37	496	536	939
679	848048	746626	37	496	536	939
680	848048	746697	37	496	536	939
681	848049	746837	37	496	536	939
682	848119	746909	37	496	536	939

TABLE E-12
WELLS WITHIN RESOURCE BLOCK 37
FLORENCE COPPER PROJECT
FLORENCE, ARIZONA

Well Number	Easting	Northing	Resource Block	Depth to Top of Bedrock (ft bgs)	Depth to Top of Injection Zone (ft bgs)	Depth to Bottom of Injection Zone (ft bgs)
683	848048	746909	37	496	536	939
690	848119	746485	37	496	536	939
691	847907	746626	37	496	536	939
692	847836	746626	37	496	536	939
693	847836	746697	37	496	536	939
694	847977	746555	37	496	536	939
695	847907	746555	37	496	536	939
696	847977	746485	37	496	536	939
697	848048	746485	37	496	536	939
698	848048	746414	37	496	536	939

Notes:

ft bgs = feet below ground surface

OMB No. 2040-0042 Approval Expires 4/30/2022

United States Environmental Protection Agency

WELL REWORK RECORD, PLUGGING AND ABANDONMENT PLAN, OR PLUGGING AND ABANDONMENT AFFIDAVIT

Name and Address, Phone Number and/or Email of Permittee

Florence Copper Project
1575 W Hunt Hwy,
Florence, AZ 85132

Permit or EPA ID Number	API Number	Full Well Name
R9UIC-AZ3-FY11-1		Block 38 Wells - See Attached Table E-13

State	County
Arizona	Pinal

Locate well in two directions from nearest lines of quarter section and drilling unit

Surface Location

NE 1/4 of SW 1/4 of Section 28 Township 4S Range 9E

____ ft. from (N/S) ____ Line of quarter section

____ ft. from (E/W) ____ Line of quarter section.

Latitude 33.051569

Longitude -111.431269

See Attached Table for Individual Well Coordinates.

Well Class	Timing of Action (pick one)	Type of Action (pick one)
☐ Class I ☐ Class II ☑ Class III ☐ Class V	☑ Notice Prior to Work Date Expected to Commence January 2027 ☐ Report After Work Date Work Ended	☐ Well Rework ☑ Plugging and Abandonment ☐ Conversion to a Non-Injection Well

Provide a narrative description of the work planned to be performed, or that was performed. Use additional pages as necessary. See instructions.

This plugging and abandonment applies to wells Class III wells to be constructed in block 38. There are 53 Class III multi-use injection/ recovery wells, planned for construction in this block. The injection and recovery wells will be of uniform design, and will be used for injection and recovery on an alternate basis. Some of the injection and recovery wells will be used as perimeter and observation wells prior to well field build-out.

The work performed includes plugging and abandonment of the Class III wells in resource block 38. Plugging and abandonment will be accomplished following procedures defined in Attachment E of the application. Plugging and abandonment details are shown on the attached Figure E-13.

Certification

I certify under the penalty of law that I have personally examined and am familiar with the information submitted in this document and all attachments and that, based on my inquiry of those individuals immediately responsible for obtaining the information, I believe that the information is true, accurate, and complete. I am aware that there are significant penalties for submitting false information, including the possibliity of fine and imprisonment. (Ref. 40 CFR § 144.32)

Name and Official Title *(Please type or print)*	Signature	Date Signed
Dan Johnson, VP - General Manager		10/3/2019

INSTRUCTIONS FOR FORM 7520-19

This form replaces forms 7520-12 and 7520-14. Use this form only when work is planned or has occurred that affects the well's construction or operation as an injection well, including work on the casing, tubing or packer (or for shallow Class V wells, the subsurface fluid emplacement network). Use one form per injection well. While reports or other information developed by contractors or service companies may be attached, this form must be signed by a responsible entity as described at 40 CFR 144.32. Note: operators closing Class V wells should use Form 7520-17.

NAME, ADDRESS, PHONE AND/OR EMAIL OF PERMITTEE: Enter the name and street address, city/town, state, and ZIP code of the permittee. Also provide an email address (if available) and/or a phone number.

PERMIT OR EPA ID NUMBER: Enter the well identification number or permit number assigned to the well by the EPA or the permitting authority.

API NUMBER: Enter the number assigned by the local jurisdiction (usually a State Oil and Gas Agency) using the American Petroleum Institute standard numbering system.

FULL WELL NAME: Enter the full name of the well or project.

Enter the **STATE** and **COUNTY** where the well is located. For States that do not have counties, use the name of that State's equivalent jurisdiction at a more local level.

WELL LOCATION: Fill in the complete township, range, and section to the nearest quarter-quarter section. A township is north or south of the baseline, and a range is east or west of the principal meridian (e.g., T12N, R34W). Also include the distance, in feet, from the nearest north or south line and nearest east or west line of the quarter-section. Also, enter the **latitude** and **longitude** of the well in decimal degrees, to five or six places if possible; be sure to include a negative sign for the longitude of a well in the Western Hemisphere and a negative sign for the latitude of a well in the Southern Hemisphere.

Enter the **WELL CLASS,** i.e., the class of injection well as defined in 40 CFR 144.6.

TIMING OF THE ACTION: Check ***Notice prior to work*** if the activity has not yet occurred (i.e., is planned). Check ***Report after work*** if the activity described has already occurred. As appropriate, include the date the activity is expected to start or the date the activity was completed. (Note this may not be available, e.g., for a plugging plan submitted with a permit application.)

TYPE OF ACTION: Check the appropriate box to describe the kind of activity being reported. Check ***Well Rework*** for work that was/will be performed on the well after it has already been in operation as an injection well. Check ***Plugging and Abandonment*** to report on plans for or descriptions of final closure/plugging after use as an injection well. Check ***Conversion to a Non-Injection Well*** if the well is to be converted to something other than an injection well.

Provide a **NARRATIVE DESCRIPTION** of the work planned to be performed, or that was performed. The narrative should include a description of the main procedures planned or that occurred during the work activity. A service company report, daily report, or similar document may be attached if it includes all the requested information and is clear and legible.

For well reworks, include the following information: The reason for the well rework; depths of activity; type of activity; changes to injection well configuration, well casing, or cement behind casing; any plug added to the well and its depth; any newly drilled interval and its depth; method(s) to demonstrate that the well has mechanical integrity (as applicable); and any deviations from the approved rework plan (as applicable).

For a well plugging plan, include the following information: Reason for the well plugging; number of plugs placed, and their depths; materials used as plugs (e.g., cast iron bridge plug, cement, cement retainer); method to set plugs; and wait-on-cement times, if any. Also provide one or more cost estimates from an independent firm in the business of plugging and abandoning wells to plug the well as described in the plan.

For well plugging affidavit, include the following information: Reason for the well plugging; number of plugs placed, and their depths; materials used as plugs (e.g., cast iron bridge plug, cement, cement retainer); method to set plugs; wait-on-cement times, if any; and any deviations from the approved plugging plan (if applicable).

For conversion to a non-injection well, include the following information: Depths of activity; type of activity; changes to injection well configuration, well casing, or cement behind casing; any plug added to the well and its depth; any newly drilled interval and its depth; depths of new perforations; and method(s) to demonstrate that the well has mechanical integrity (as applicable).

For all of the above activities, include a well sketch depicting the work, results of well tests/logging performed, service company tickets, and any other available information demonstrating how the work was/is to be performed. Also, specify whether depths are below ground surface, relative to Kelly bushing, etc.

CERTIFICATION: This form must be signed and dated by either: a responsible corporate officer for a corporation, by a general partner for a partnership, by the proprietor of a sole proprietorship, or by a principal executive or ranking elected official for a public agency.

PAPERWORK REDUCTION ACT NOTICE: The public reporting and recordkeeping burden for this collection of information is estimated to average between 6.0 and 7.9 hours per response, depending on the injection well class. Burden means the total time, effort, or financial resource expended by persons to generate, maintain, retain, or disclose or provide information to or for a Federal Agency. This includes the time needed to review instructions; develop, acquire, install, and utilize technology and systems for the purposes of collecting, validating, and verifying information, processing and maintaining information, and disclosing and providing information; adjust the existing ways to comply with any previously applicable instructions and requirements; train personnel to be able to respond to the collection of information; search data sources; complete and review the collection of information; and, transmit or otherwise disclose the information. An agency may not conduct or sponsor, and a person is not required to respond to, a collection of information unless it displays a currently valid OMB control number. Send comments on the Agency's need for this information, the accuracy of the provided burden estimates, and any suggested methods for minimizing respondent burden, including the use of automated collection techniques to Director, Collection Strategies Division, U.S. Environmental Protection Agency (2822), 1200 Pennsylvania Ave., NW., Washington, D.C. 20460. Include the OMB control number in any correspondence. Do not send the completed forms to this address.

PROPOSED DESIGN
INJECTION AND RECOVERY WELL

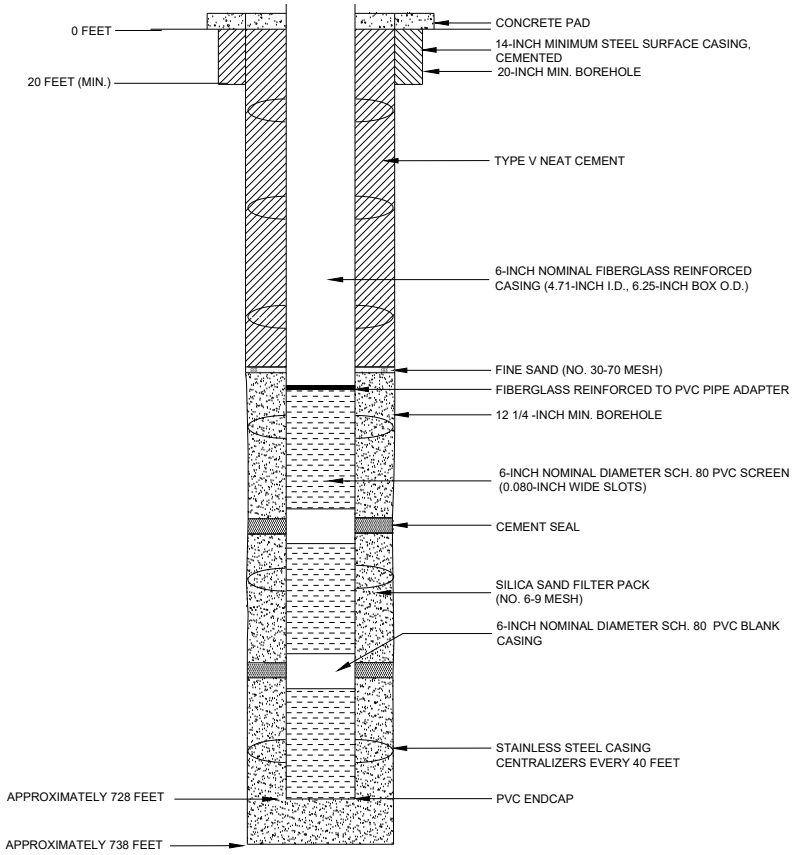

PROPOSED PLUGGING AND
ABANDONMENT
INJECTION AND RECOVERY WELL

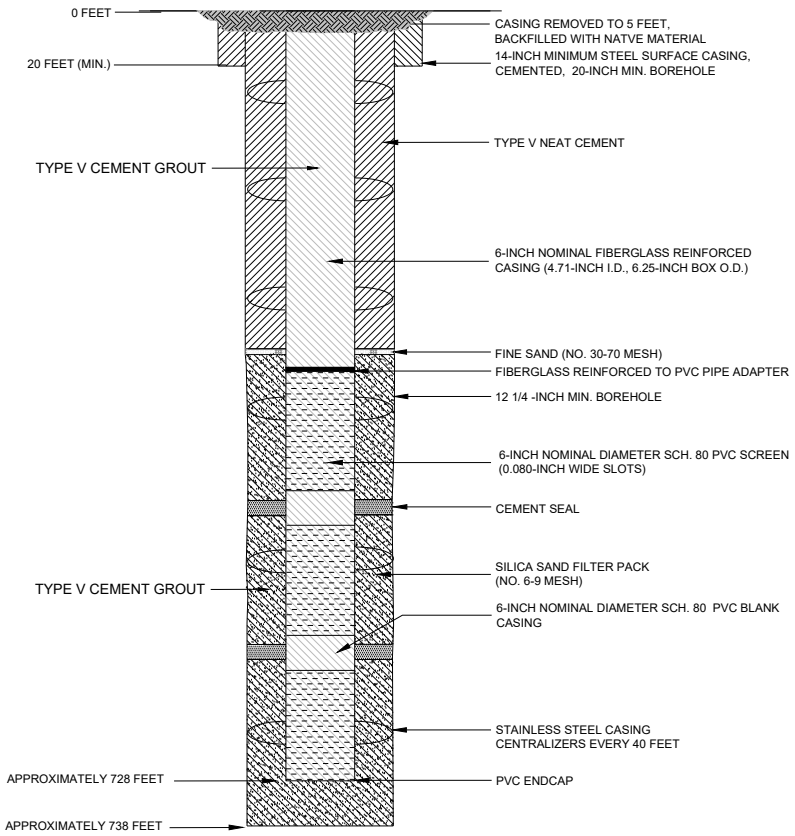

NOTES

1. WELL DESIGN DETAILS ARE BASED ON CORE HOLE AND WELL LOG RECORDS.

HALEY ALDRICH

FLORENCE COPPER, INC.
FLORENCE, ARIZONA

ABANDONMENT SCHEMATIC
RESOURCE BLOCK 38
TYPICAL INJECTION AND
RECOVERY WELL

SCALE: AS SHOWN
JULY 2019

FIGURE E-13

TABLE E-13
WELLS WITHIN RESOURCE BLOCK 38
FLORENCE COPPER PROJECT
FLORENCE, ARIZONA

Well Number	Easting	Northing	Resource Block	Depth to Top of Bedrock (ft bgs)	Depth to Top of Injection Zone (ft bgs)	Depth to Bottom of Injection Zone (ft bgs)
12	848614	746626	38	368	408	728
13	848685	746697	38	368	408	728
14	848685	746768	38	368	408	728
15	848614	746697	38	368	408	728
16	848685	746838	38	368	408	728
17	848614	746768	38	368	408	728
18	848543	746697	38	368	408	728
19	848685	746556	38	368	408	728
20	848685	746626	38	368	408	728
21	848755	746768	38	368	408	728
22	848755	746556	38	368	408	728
23	848755	746626	38	368	408	728
24	848755	746697	38	368	408	728
25	848756	746838	38	368	408	728
26	848755	746909	38	368	408	728
27	848755	746485	38	368	408	728
32	849462	747121	38	368	408	728
34	849392	747121	38	368	408	728
40	848967	746555	38	368	408	728
42	849038	746697	38	368	408	728
43	848967	746626	38	368	408	728
44	848897	746555	38	368	408	728
45	848826	746626	38	368	408	728
46	848897	746697	38	368	408	728
47	848967	746768	38	368	408	728
51	848967	746697	38	368	408	728
52	848897	746626	38	368	408	728
53	848826	746555	38	368	408	728
54	848826	746768	38	368	408	728
55	848897	746838	38	368	408	728
59	848897	746768	38	368	408	728
60	848826	746697	38	368	408	728
61	848826	746909	38	368	408	728
65	848826	746838	38	368	408	728
74	849038	746555	38	368	408	728
85	848826	746343	38	368	408	728
86	848897	746414	38	368	408	728
87	848897	746485	38	368	408	728
88	848826	746414	38	368	408	728

TABLE E-13
WELLS WITHIN RESOURCE BLOCK 38
FLORENCE COPPER PROJECT
FLORENCE, ARIZONA

Well Number	Easting	Northing	Resource Block	Depth to Top of Bedrock (ft bgs)	Depth to Top of Injection Zone (ft bgs)	Depth to Bottom of Injection Zone (ft bgs)
89	848826	746485	38	368	408	728
90	848967	746485	38	368	408	728
91	848755	746343	38	368	408	728
299	849109	746626	38	368	408	728
312	849038	746626	38	368	408	728
340	848614	746556	38	368	408	728
341	848685	746485	38	368	408	728
342	848755	746414	38	368	408	728
343	848543	746556	38	368	408	728
385	848614	746485	38	368	408	728
387	848685	746414	38	368	408	728
700	848543	746626	38	368	408	728
701	848495	746556	38	368	408	728
702	848504	746626	38	368	408	728

Notes:

ft bgs = feet below ground surface

OMB No. 2040-0042 Approval Expires 4/30/2022

United States Environmental Protection Agency

WELL REWORK RECORD, PLUGGING AND ABANDONMENT PLAN, OR PLUGGING AND ABANDONMENT AFFIDAVIT

Name and Address, Phone Number and/or Email of Permittee

Florence Copper Project
1575 W Hunt Hwy,
Florence, AZ 85132

Permit or EPA ID Number	API Number	Full Well Name
R9UIC-AZ3-FY11-1		Block 39 Wells - See Attached Table E-14

State	County
Arizona	Pinal

Locate well in two directions from nearest lines of quarter section and drilling unit

Surface Location

NW 1/4 of SE 1/4 of Section 28 Township 4S Range 9E

_____ ft. from (N/S) _____ Line of quarter section

_____ ft. from (E/W) _____ Line of quarter section.

Latitude 33.051457

Longitude -111.428830

See Attached Table for Individual Well Coordinates.

Well Class	Timing of Action (pick one)	Type of Action (pick one)
☐ Class I ☐ Class II ☑ Class III ☐ Class V	☑ Notice Prior to Work Date Expected to Commence January 2027 ☐ Report After Work Date Work Ended	☐ Well Rework ☑ Plugging and Abandonment ☐ Conversion to a Non-Injection Well

Provide a narrative description of the work planned to be performed, or that was performed. Use additional pages as necessary. See instructions.

This plugging and abandonment applies to wells Class III wells to be constructed in block 39. There are 51 Class III multi-use injection/ recovery wells, planned for construction in this block. The injection and recovery wells will be of uniform design, and will be used for injection and recovery on an alternate basis. Some of the injection and recovery wells will be used as perimeter and observation wells prior to well field build-out.

The work performed includes plugging and abandonment of the Class III wells in resource block 39. Plugging and abandonment will be accomplished following procedures defined in Attachment E of the application. Plugging and abandonment details are shown on the attached Figure E-14.

Certification

I certify under the penalty of law that I have personally examined and am familiar with the information submitted in this document and all attachments and that, based on my inquiry of those individuals immediately responsible for obtaining the information, I believe that the information is true, accurate, and complete. I am aware that there are significant penalties for submitting false information, including the possibliity of fine and imprisonment. (Ref. 40 CFR § 144.32)

Name and Official Title *(Please type or print)*	Signature	Date Signed
Dan Johnson, VP - General Manager		10/3/2019

INSTRUCTIONS FOR FORM 7520-19

This form replaces forms 7520-12 and 7520-14. Use this form only when work is planned or has occurred that affects the well's construction or operation as an injection well, including work on the casing, tubing or packer (or for shallow Class V wells, the subsurface fluid emplacement network). Use one form per injection well. While reports or other information developed by contractors or service companies may be attached, this form must be signed by a responsible entity as described at 40 CFR 144.32. Note: operators closing Class V wells should use Form 7520-17.

NAME, ADDRESS, PHONE AND/OR EMAIL OF PERMITTEE: Enter the name and street address, city/town, state, and ZIP code of the permittee. Also provide an email address (if available) and/or a phone number.

PERMIT OR EPA ID NUMBER: Enter the well identification number or permit number assigned to the well by the EPA or the permitting authority.

API NUMBER: Enter the number assigned by the local jurisdiction (usually a State Oil and Gas Agency) using the American Petroleum Institute standard numbering system.

FULL WELL NAME: Enter the full name of the well or project.

Enter the **STATE** and **COUNTY** where the well is located. For States that do not have counties, use the name of that State's equivalent jurisdiction at a more local level.

WELL LOCATION: Fill in the complete township, range, and section to the nearest quarter-quarter section. A township is north or south of the baseline, and a range is east or west of the principal meridian (e.g., T12N, R34W). Also include the distance, in feet, from the nearest north or south line and nearest east or west line of the quarter-section. Also, enter the **latitude** and **longitude** of the well in decimal degrees, to five or six places if possible; be sure to include a negative sign for the longitude of a well in the Western Hemisphere and a negative sign for the latitude of a well in the Southern Hemisphere.

Enter the **WELL CLASS,** i.e., the class of injection well as defined in 40 CFR 144.6.

TIMING OF THE ACTION: Check ***Notice prior to work*** if the activity has not yet occurred (i.e., is planned). Check ***Report after work*** if the activity described has already occurred. As appropriate, include the date the activity is expected to start or the date the activity was completed. (Note this may not be available, e.g., for a plugging plan submitted with a permit application.)

TYPE OF ACTION: Check the appropriate box to describe the kind of activity being reported. Check ***Well Rework*** for work that was/will be performed on the well after it has already been in operation as an injection well. Check ***Plugging and Abandonment*** to report on plans for or descriptions of final closure/plugging after use as an injection well. Check ***Conversion to a Non-Injection Well*** if the well is to be converted to something other than an injection well.

Provide a **NARRATIVE DESCRIPTION** of the work planned to be performed, or that was performed. The narrative should include a description of the main procedures planned or that occurred during the work activity. A service company report, daily report, or similar document may be attached if it includes all the requested information and is clear and legible.

For well reworks, include the following information: The reason for the well rework; depths of activity; type of activity; changes to injection well configuration, well casing, or cement behind casing; any plug added to the well and its depth; any newly drilled interval and its depth; method(s) to demonstrate that the well has mechanical integrity (as applicable); and any deviations from the approved rework plan (as applicable).

For a well plugging plan, include the following information: Reason for the well plugging; number of plugs placed, and their depths; materials used as plugs (e.g., cast iron bridge plug, cement, cement retainer); method to set plugs; and wait-on-cement times, if any. Also provide one or more cost estimates from an independent firm in the business of plugging and abandoning wells to plug the well as described in the plan.

For well plugging affidavit, include the following information: Reason for the well plugging; number of plugs placed, and their depths; materials used as plugs (e.g., cast iron bridge plug, cement, cement retainer); method to set plugs; wait-on-cement times, if any; and any deviations from the approved plugging plan (if applicable).

For conversion to a non-injection well, include the following information: Depths of activity; type of activity; changes to injection well configuration, well casing, or cement behind casing; any plug added to the well and its depth; any newly drilled interval and its depth; depths of new perforations; and method(s) to demonstrate that the well has mechanical integrity (as applicable).

For all of the above activities, include a well sketch depicting the work, results of well tests/logging performed, service company tickets, and any other available information demonstrating how the work was/is to be performed. Also, specify whether depths are below ground surface, relative to Kelly bushing, etc.

CERTIFICATION: This form must be signed and dated by either: a responsible corporate officer for a corporation, by a general partner for a partnership, by the proprietor of a sole proprietorship, or by a principal executive or ranking elected official for a public agency.

PAPERWORK REDUCTION ACT NOTICE: The public reporting and recordkeeping burden for this collection of information is estimated to average between 6.0 and 7.9 hours per response, depending on the injection well class. Burden means the total time, effort, or financial resource expended by persons to generate, maintain, retain, or disclose or provide information to or for a Federal Agency. This includes the time needed to review instructions; develop, acquire, install, and utilize technology and systems for the purposes of collecting, validating, and verifying information, processing and maintaining information, and disclosing and providing information; adjust the existing ways to comply with any previously applicable instructions and requirements; train personnel to be able to respond to the collection of information; search data sources; complete and review the collection of information; and, transmit or otherwise disclose the information. An agency may not conduct or sponsor, and a person is not required to respond to, a collection of information unless it displays a currently valid OMB control number. Send comments on the Agency's need for this information, the accuracy of the provided burden estimates, and any suggested methods for minimizing respondent burden, including the use of automated collection techniques to Director, Collection Strategies Division, U.S. Environmental Protection Agency (2822), 1200 Pennsylvania Ave., NW., Washington, D.C. 20460. Include the OMB control number in any correspondence. Do not send the completed forms to this address.

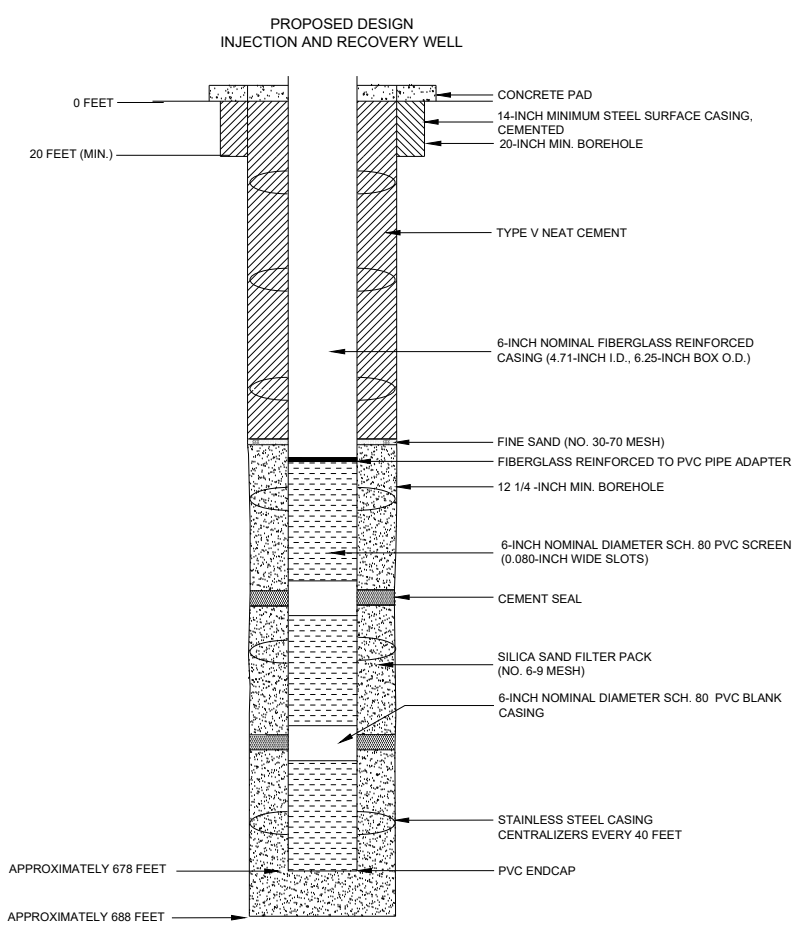

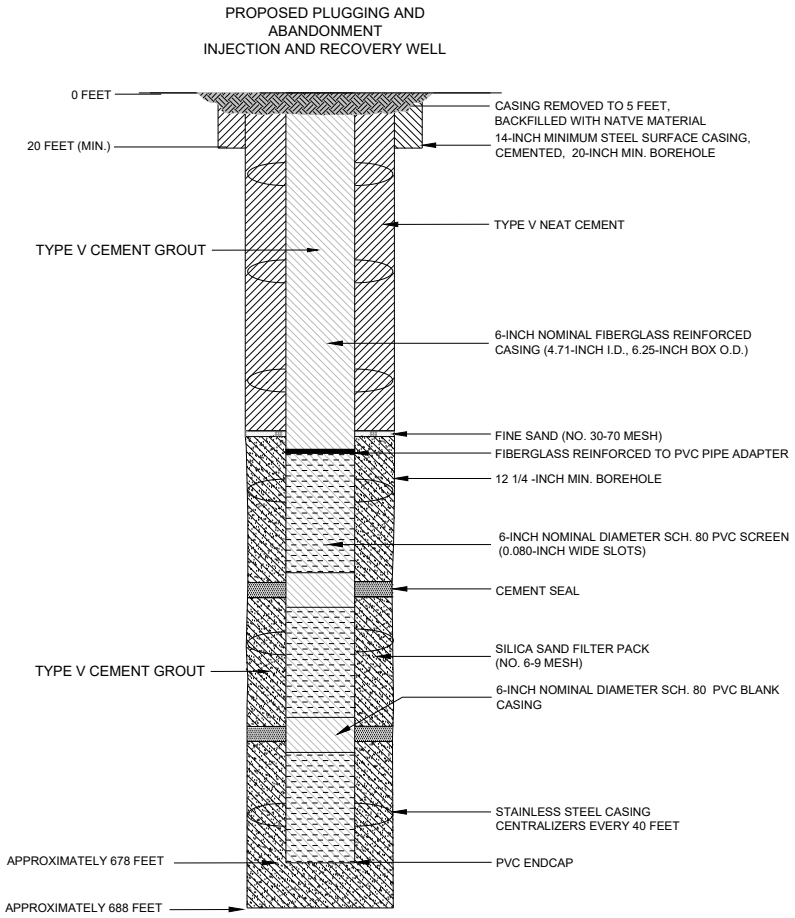

NOTES

1. WELL DESIGN DETAILS ARE BASED ON CORE HOLE AND WELL LOG RECORDS.

HALEY ALDRICH

FLORENCE COPPER, INC.
FLORENCE, ARIZONA

ABANDONMENT SCHEMATIC
RESOURCE BLOCK 39
TYPICAL INJECTION AND RECOVERY WELL

SCALE: AS SHOWN
JULY 2019

FIGURE E-14

TABLE E-14
WELLS WITHIN RESOURCE BLOCK 39
FLORENCE COPPER PROJECT
FLORENCE, ARIZONA

Well Number	Easting	Northing	Resource Block	Depth to Top of Bedrock (ft bgs)	Depth to Top of Injection Zone (ft bgs)	Depth to Bottom of Injection Zone (ft bgs)
142	849674	746556	39	350	390	678
143	849745	746626	39	350	390	678
145	849745	746697	39	350	390	678
146	849674	746626	39	350	390	678
147	849604	746556	39	350	390	678
148	849462	746556	39	350	390	678
149	849533	746626	39	350	390	678
150	849604	746697	39	350	390	678
151	849674	746768	39	350	390	678
155	849674	746697	39	350	390	678
156	849604	746626	39	350	390	678
157	849533	746556	39	350	390	678
158	849392	746626	39	350	390	678
159	849462	746697	39	350	390	678
160	849533	746768	39	350	390	678
161	849604	746838	39	350	390	678
165	849604	746768	39	350	390	678
166	849533	746697	39	350	390	678
167	849462	746626	39	350	390	678
168	849392	746556	39	350	390	678
169	849321	746697	39	350	390	678
170	849392	746768	39	350	390	678
171	849462	746838	39	350	390	678
172	849533	746909	39	350	390	678
176	849533	746838	39	350	390	678
177	849462	746768	39	350	390	678
178	849392	746697	39	350	390	678
179	849321	746626	39	350	390	678
182	849462	746909	39	350	390	678
183	849392	746838	39	350	390	678
184	849321	746768	39	350	390	678
185	849250	746697	39	350	390	678
186	849334	746556	39	350	390	678
188	849250	746556	39	350	390	678
189	849250	746626	39	350	390	678
190	849179	746626	39	350	390	678
195	849745	746556	39	350	390	678
196	849816	746626	39	350	390	678
199	849533	746343	39	350	390	678

TABLE E-14
WELLS WITHIN RESOURCE BLOCK 39
FLORENCE COPPER PROJECT
FLORENCE, ARIZONA

Well Number	Easting	Northing	Resource Block	Depth to Top of Bedrock (ft bgs)	Depth to Top of Injection Zone (ft bgs)	Depth to Bottom of Injection Zone (ft bgs)
200	849604	746405	39	350	390	678
201	849604	746485	39	350	390	678
202	849533	746405	39	350	390	678
203	849462	746343	39	350	390	678
207	849462	746405	39	350	390	678
208	849533	746485	39	350	390	678
209	849462	746485	39	350	390	678
210	849392	746414	39	350	390	678
212	849392	746485	39	350	390	678
213	849321	746485	39	350	390	678
216	849321	746446	39	350	390	678
218	849674	746485	39	350	390	678

Notes:

ft bgs = feet below ground surface

OMB No. 2040-0042 Approval Expires 4/30/2022

United States Environmental Protection Agency

WELL REWORK RECORD, PLUGGING AND ABANDONMENT PLAN, OR PLUGGING AND ABANDONMENT AFFIDAVIT

Name and Address, Phone Number and/or Email of Permittee

Florence Copper Project
1575 W Hunt Hwy,
Florence, AZ 85132

Permit or EPA ID Number	API Number	Full Well Name
R9UIC-AZ3-FY11-1		Block 40 Wells - See Attached Table E-15

State	County
Arizona	Pinal

Locate well in two directions from nearest lines of quarter section and drilling unit

Surface Location

NW 1/4 of SE 1/4 of Section 28 Township 4S Range 9E

_____ ft. from (N/S) _____ Line of quarter section

_____ ft. from (E/W) _____ Line of quarter section.

Latitude 33.051341

Longitude -111.426663

See Attached Table for Individual Well Coordinates.

Well Class	Timing of Action (pick one)	Type of Action (pick one)
☐ Class I ☐ Class II ☑ Class III ☐ Class V	☑ Notice Prior to Work Date Expected to Commence January 2027 ☐ Report After Work Date Work Ended	☐ Well Rework ☑ Plugging and Abandonment ☐ Conversion to a Non-Injection Well

Provide a narrative description of the work planned to be performed, or that was performed. Use additional pages as necessary. See instructions.

This plugging and abandonment applies to wells Class III wells to be constructed in block 40 There are 38 Class III multi-use injection/ recovery wells, 1 dedicated Class III observation, and 3 Class III perimeter wells planned for construction in this block. The injection and recovery wells will be of uniform design, and will be used for injection and recovery on an alternate basis. Some of the injection and recovery wells will be used as perimeter and observation wells prior to well field build-out. The dedicated perimeter observation well will have a design and depth similar to the injection and recovery wells, but will not have a segmented well screen.

The work performed includes plugging and abandonment of the Class III wells in resource block 40. Plugging and abandonment will be accomplished following procedures defined in Attachment E of the application. Plugging and abandonment details are shown on the attached Figures E-15a and E-15b.

Certification

I certify under the penalty of law that I have personally examined and am familiar with the information submitted in this document and all attachments and that, based on my inquiry of those individuals immediately responsible for obtaining the information, I believe that the information is true, accurate, and complete. I am aware that there are significant penalties for submitting false information, including the possibliity of fine and imprisonment. (Ref. 40 CFR § 144.32)

Name and Official Title *(Please type or print)*	Signature	Date Signed
Dan Johnson, VP - General Manager		10/3/2019

INSTRUCTIONS FOR FORM 7520-19

This form replaces forms 7520-12 and 7520-14. Use this form only when work is planned or has occurred that affects the well's construction or operation as an injection well, including work on the casing, tubing or packer (or for shallow Class V wells, the subsurface fluid emplacement network). Use one form per injection well. While reports or other information developed by contractors or service companies may be attached, this form must be signed by a responsible entity as described at 40 CFR 144.32. Note: operators closing Class V wells should use Form 7520-17.

NAME, ADDRESS, PHONE AND/OR EMAIL OF PERMITTEE: Enter the name and street address, city/town, state, and ZIP code of the permittee. Also provide an email address (if available) and/or a phone number.

PERMIT OR EPA ID NUMBER: Enter the well identification number or permit number assigned to the well by the EPA or the permitting authority.

API NUMBER: Enter the number assigned by the local jurisdiction (usually a State Oil and Gas Agency) using the American Petroleum Institute standard numbering system.

FULL WELL NAME: Enter the full name of the well or project.

Enter the **STATE** and **COUNTY** where the well is located. For States that do not have counties, use the name of that State's equivalent jurisdiction at a more local level.

WELL LOCATION: Fill in the complete township, range, and section to the nearest quarter-quarter section. A township is north or south of the baseline, and a range is east or west of the principal meridian (e.g., T12N, R34W). Also include the distance, in feet, from the nearest north or south line and nearest east or west line of the quarter-section. Also, enter the **latitude** and **longitude** of the well in decimal degrees, to five or six places if possible; be sure to include a negative sign for the longitude of a well in the Western Hemisphere and a negative sign for the latitude of a well in the Southern Hemisphere.

Enter the **WELL CLASS,** i.e., the class of injection well as defined in 40 CFR 144.6.

TIMING OF THE ACTION: Check ***Notice prior to work*** if the activity has not yet occurred (i.e., is planned). Check ***Report after work*** if the activity described has already occurred. As appropriate, include the date the activity is expected to start or the date the activity was completed. (Note this may not be available, e.g., for a plugging plan submitted with a permit application.)

TYPE OF ACTION: Check the appropriate box to describe the kind of activity being reported. Check ***Well Rework*** for work that was/will be performed on the well after it has already been in operation as an injection well. Check ***Plugging and Abandonment*** to report on plans for or descriptions of final closure/plugging after use as an injection well. Check ***Conversion to a Non-Injection Well*** if the well is to be converted to something other than an injection well.

Provide a **NARRATIVE DESCRIPTION** of the work planned to be performed, or that was performed. The narrative should include a description of the main procedures planned or that occurred during the work activity. A service company report, daily report, or similar document may be attached if it includes all the requested information and is clear and legible.

For well reworks, include the following information: The reason for the well rework; depths of activity; type of activity; changes to injection well configuration, well casing, or cement behind casing; any plug added to the well and its depth; any newly drilled interval and its depth; method(s) to demonstrate that the well has mechanical integrity (as applicable); and any deviations from the approved rework plan (as applicable).

For a well plugging plan, include the following information: Reason for the well plugging; number of plugs placed, and their depths; materials used as plugs (e.g., cast iron bridge plug, cement, cement retainer); method to set plugs; and wait-on-cement times, if any. Also provide one or more cost estimates from an independent firm in the business of plugging and abandoning wells to plug the well as described in the plan.

For well plugging affidavit, include the following information: Reason for the well plugging; number of plugs placed, and their depths; materials used as plugs (e.g., cast iron bridge plug, cement, cement retainer); method to set plugs; wait-on-cement times, if any; and any deviations from the approved plugging plan (if applicable).

For conversion to a non-injection well, include the following information: Depths of activity; type of activity; changes to injection well configuration, well casing, or cement behind casing; any plug added to the well and its depth; any newly drilled interval and its depth; depths of new perforations; and method(s) to demonstrate that the well has mechanical integrity (as applicable).

For all of the above activities, include a well sketch depicting the work, results of well tests/logging performed, service company tickets, and any other available information demonstrating how the work was/is to be performed. Also, specify whether depths are below ground surface, relative to Kelly bushing, etc.

CERTIFICATION: This form must be signed and dated by either: a responsible corporate officer for a corporation, by a general partner for a partnership, by the proprietor of a sole proprietorship, or by a principal executive or ranking elected official for a public agency.

PAPERWORK REDUCTION ACT NOTICE: The public reporting and recordkeeping burden for this collection of information is estimated to average between 6.0 and 7.9 hours per response, depending on the injection well class. Burden means the total time, effort, or financial resource expended by persons to generate, maintain, retain, or disclose or provide information to or for a Federal Agency. This includes the time needed to review instructions; develop, acquire, install, and utilize technology and systems for the purposes of collecting, validating, and verifying information, processing and maintaining information, and disclosing and providing information; adjust the existing ways to comply with any previously applicable instructions and requirements; train personnel to be able to respond to the collection of information; search data sources; complete and review the collection of information; and, transmit or otherwise disclose the information. An agency may not conduct or sponsor, and a person is not required to respond to, a collection of information unless it displays a currently valid OMB control number. Send comments on the Agency's need for this information, the accuracy of the provided burden estimates, and any suggested methods for minimizing respondent burden, including the use of automated collection techniques to Director, Collection Strategies Division, U.S. Environmental Protection Agency (2822), 1200 Pennsylvania Ave., NW., Washington, D.C. 20460. Include the OMB control number in any correspondence. Do not send the completed forms to this address.

PROPOSED DESIGN
INJECTION AND RECOVERY WELL

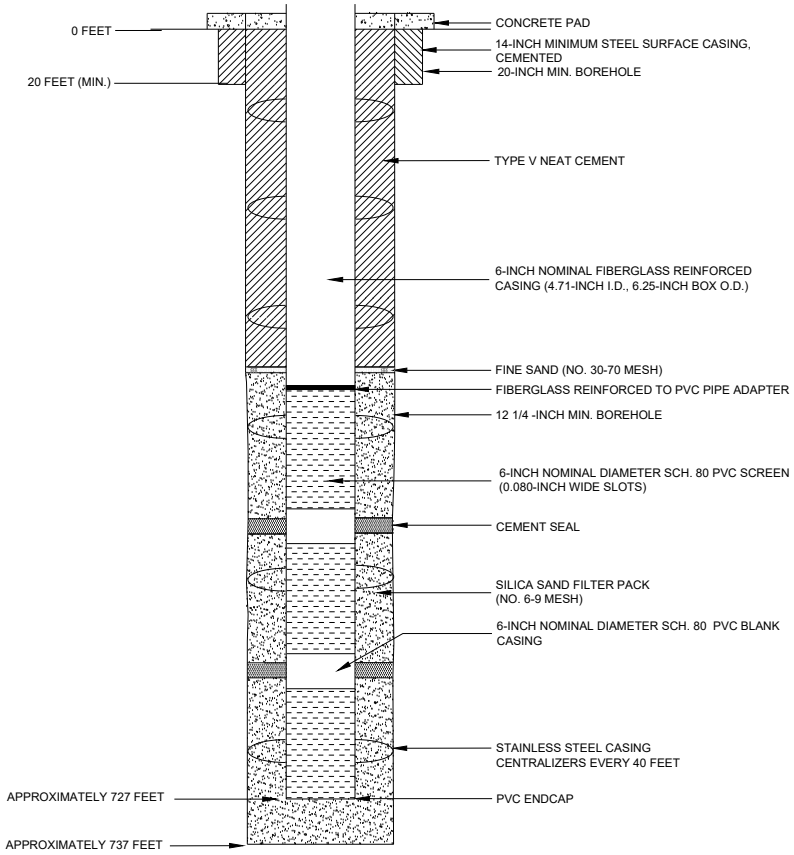

PROPOSED PLUGGING AND
ABANDONMENT
INJECTION AND RECOVERY WELL

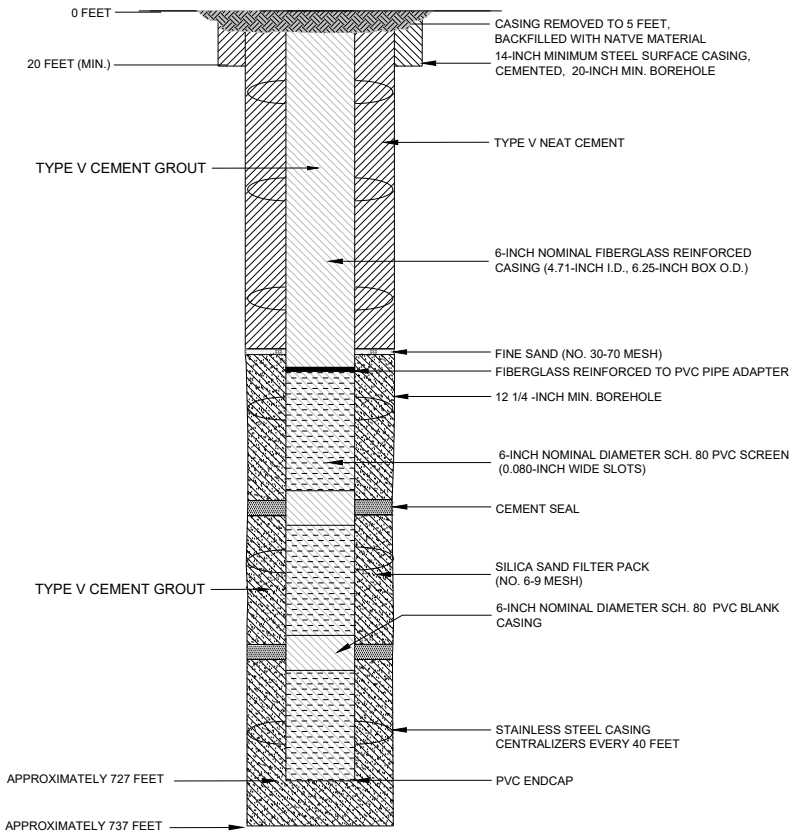

NOTES

1. WELL DESIGN DETAILS ARE BASED ON CORE HOLE AND WELL LOG RECORDS.

HALEY ALDRICH

FLORENCE COPPER, INC.
FLORENCE, ARIZONA

ABANDONMENT SCHEMATIC
RESOURCE BLOCK 40
TYPICAL INJECTION AND
RECOVERY WELL

SCALE: AS SHOWN
JULY 2019

FIGURE E-15a

Saved by: MNICHOLLS Printed: 7/25/2019 7:20 PM Sheet: HA-FIG-A-L(2)
\\HALEYALDRICH.COM\SHARE\PHX_COMMON\PROJECTS\FLORENCE COPPER\132473 FLORENCE GROUNDWATER PERMITTING\CAD\132473_000-OBSERVATION_WELL_CONSTRUCTION DIAGRAM.DWG

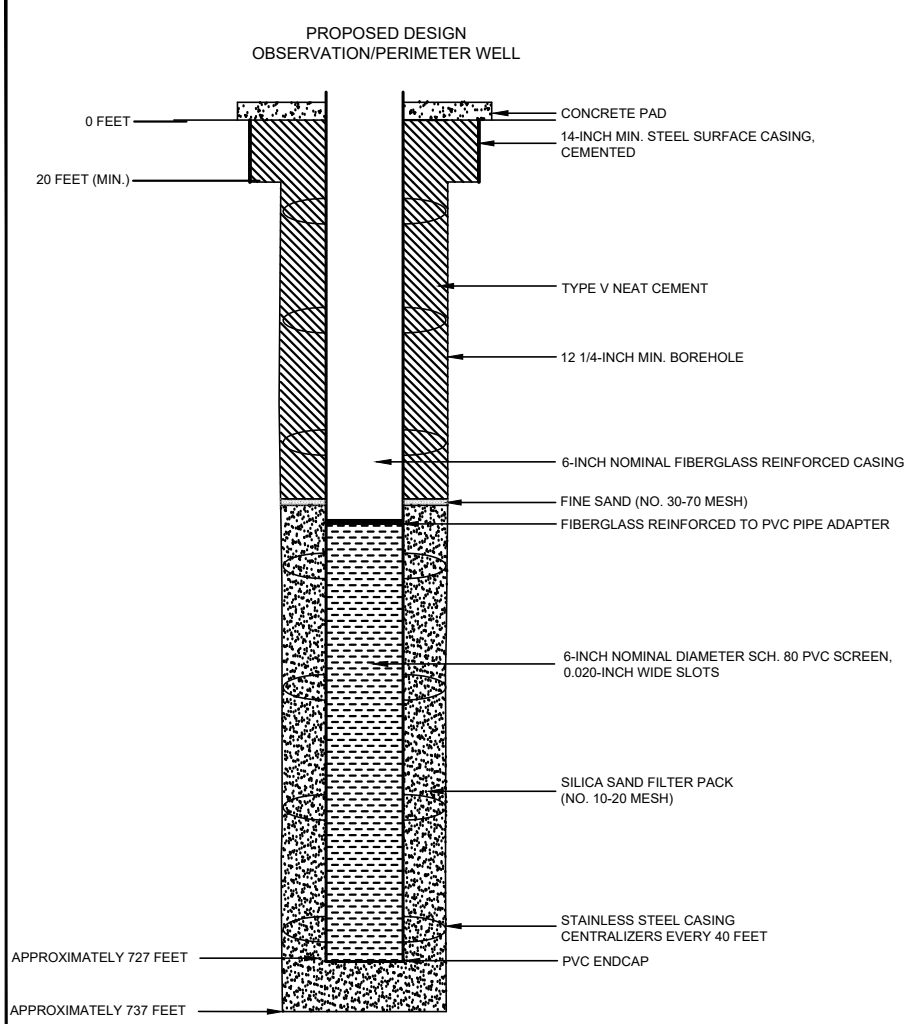

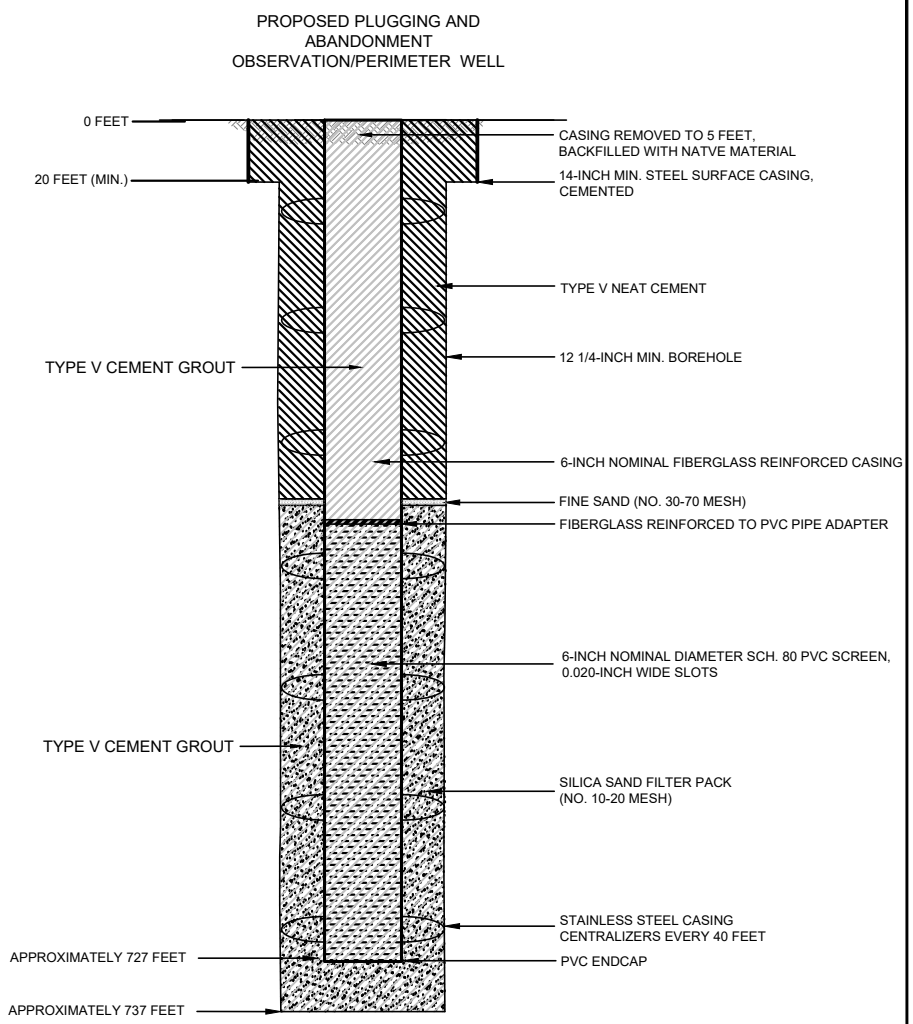

NOTES

1. WELL DESIGN DETAILS ARE BASED ON CORE HOLE AND WELL LOG RECORDS.

HALEY ALDRICH

FLORENCE COPPER, INC.
FLORENCE, ARIZONA

ABANDONMENT SCHEMATIC
RESOURCE BLOCK 40
OBSERVATION/PERIMETER WELL

JULY 2019
SCALE: AS SHOWN

FIGURE E-15b

TABLE E-15
WELLS WITHIN RESOURCE BLOCK 40
FLORENCE COPPER PROJECT
FLORENCE, ARIZONA

Well Number	Easting	Northing	Resource Block	Depth to Top of Bedrock (ft bgs)	Depth to Top of Injection Zone (ft bgs)	Depth to Bottom of Injection Zone (ft bgs)
221	849887	746626	40	350	390	727
245	850099	746556	40	350	390	727
246	850169	746626	40	350	390	727
325	850452	746697	40	350	390	727
324	850523	746626	40	350	390	727
247	850240	746697	40	350	390	727
248	850099	746626	40	350	390	727
249	850028	746556	40	350	390	727
250	849957	746626	40	350	390	727
251	850099	746697	40	350	390	727
252	850028	746626	40	350	390	727
253	849957	746556	40	350	390	727
254	849957	746697	40	350	390	727
255	850240	746556	40	350	390	727
256	850169	746556	40	350	390	727
257	850240	746626	40	350	390	727
259	850452	746626	40	350	390	727
260	850382	746697	40	350	390	727
261	850452	746556	40	350	390	727
262	850311	746556	40	350	390	727
263	850381	746556	40	350	390	727
264	850382	746626	40	350	390	727
265	850311	746626	40	350	390	727
268	850169	746343	40	350	390	727
272	850099	746414	40	350	390	727
275	850028	746485	40	350	390	727
278	850240	746485	40	350	390	727
279	850169	746485	40	350	390	727
280	850099	746485	40	350	390	727
281	850240	746414	40	350	390	727
282	850169	746414	40	350	390	727
283	850240	746343	40	350	390	727
290	850381	746485	40	350	390	727
291	850311	746485	40	350	390	727
294	850311	746414	40	350	390	727

TABLE E-15
WELLS WITHIN RESOURCE BLOCK 40
FLORENCE COPPER PROJECT
FLORENCE, ARIZONA

Well Number	Easting	Northing	Resource Block	Depth to Top of Bedrock (ft bgs)	Depth to Top of Injection Zone (ft bgs)	Depth to Bottom of Injection Zone (ft bgs)
304	850028	746697	40	350	390	727
305	850169	746697	40	350	390	727
306	850311	746697	40	350	390	727
O12	850240	746838	40	350	390	727
P21	850028	746768	40	350	390	727
P22	850169	746768	40	350	390	727
P23	850311	746768	40	350	390	727

Notes:

ft bgs = feet below ground surface

OMB No. 2040-0042 Approval Expires 4/30/2022

United States Environmental Protection Agency

WELL REWORK RECORD, PLUGGING AND ABANDONMENT PLAN, OR PLUGGING AND ABANDONMENT AFFIDAVIT

Name and Address, Phone Number and/or Email of Permittee

Florence Copper Project
1575 W Hunt Hwy,
Florence, AZ 85132

Permit or EPA ID Number	API Number	Full Well Name
R9UIC-AZ3-FY11-1		Block 44 Wells - See Attached Table E-16

State	County
Arizona	Pinal

Locate well in two directions from nearest lines of quarter section and drilling unit

Surface Location

NW 1/4 of SW 1/4 of Section 28 Township 4S Range 9E

_____ ft. from (N/S) _____ Line of quarter section

_____ ft. from (E/W) _____ Line of quarter section.

Latitude 33.050516

Longitude -111.436522

See Attached Table for Individual Well Coordinates.

Well Class	Timing of Action (pick one)	Type of Action (pick one)
☐ Class I ☐ Class II ☑ Class III ☐ Class V	☑ Notice Prior to Work Date Expected to Commence January 2027 ☐ Report After Work Date Work Ended	☐ Well Rework ☑ Plugging and Abandonment ☐ Conversion to a Non-Injection Well

Provide a narrative description of the work planned to be performed, or that was performed. Use additional pages as necessary. See instructions.

This plugging and abandonment applies to wells Class III wells to be constructed in block 44. There are 31 Class III multi-use injection/ recovery wells, 3 dedicated Class III observation, and 5 Class III perimeter wells planned for construction in this block. The injection and recovery wells will be of uniform design, and will be used for injection and recovery on an alternate basis. Some of the injection and recovery wells will be used as perimeter and observation wells prior to well field build-out. The dedicated perimeter observation well will have a design and depth similar to the injection and recovery wells, but will not have a segmented well screen.

The work performed includes plugging and abandonment of the Class III wells in resource block 44. Plugging and abandonment will be accomplished following procedures defined in Attachment E of the application. Plugging and abandonment details are shown on the attached Figures E-16a and E-16b.

Certification

I certify under the penalty of law that I have personally examined and am familiar with the information submitted in this document and all attachments and that, based on my inquiry of those individuals immediately responsible for obtaining the information, I believe that the information is true, accurate, and complete. I am aware that there are significant penalties for submitting false information, including the possibliity of fine and imprisonment. (Ref. 40 CFR § 144.32)

Name and Official Title *(Please type or print)*	Signature	Date Signed
Dan Johnson, VP - General Manager		10/3/2019

INSTRUCTIONS FOR FORM 7520-19

This form replaces forms 7520-12 and 7520-14. Use this form only when work is planned or has occurred that affects the well's construction or operation as an injection well, including work on the casing, tubing or packer (or for shallow Class V wells, the subsurface fluid emplacement network). Use one form per injection well. While reports or other information developed by contractors or service companies may be attached, this form must be signed by a responsible entity as described at 40 CFR 144.32. Note: operators closing Class V wells should use Form 7520-17.

NAME, ADDRESS, PHONE AND/OR EMAIL OF PERMITTEE: Enter the name and street address, city/town, state, and ZIP code of the permittee. Also provide an email address (if available) and/or a phone number.

PERMIT OR EPA ID NUMBER: Enter the well identification number or permit number assigned to the well by the EPA or the permitting authority.

API NUMBER: Enter the number assigned by the local jurisdiction (usually a State Oil and Gas Agency) using the American Petroleum Institute standard numbering system.

FULL WELL NAME: Enter the full name of the well or project.

Enter the **STATE** and **COUNTY** where the well is located. For States that do not have counties, use the name of that State's equivalent jurisdiction at a more local level.

WELL LOCATION: Fill in the complete township, range, and section to the nearest quarter-quarter section. A township is north or south of the baseline, and a range is east or west of the principal meridian (e.g., T12N, R34W). Also include the distance, in feet, from the nearest north or south line and nearest east or west line of the quarter-section. Also, enter the **latitude** and **longitude** of the well in decimal degrees, to five or six places if possible; be sure to include a negative sign for the longitude of a well in the Western Hemisphere and a negative sign for the latitude of a well in the Southern Hemisphere.

Enter the **WELL CLASS,** i.e., the class of injection well as defined in 40 CFR 144.6.

TIMING OF THE ACTION: Check ***Notice prior to work*** if the activity has not yet occurred (i.e., is planned). Check ***Report after work*** if the activity described has already occurred. As appropriate, include the date the activity is expected to start or the date the activity was completed. (Note this may not be available, e.g., for a plugging plan submitted with a permit application.)

TYPE OF ACTION: Check the appropriate box to describe the kind of activity being reported. Check ***Well Rework*** for work that was/will be performed on the well after it has already been in operation as an injection well. Check ***Plugging and Abandonment*** to report on plans for or descriptions of final closure/plugging after use as an injection well. Check ***Conversion to a Non-Injection Well*** if the well is to be converted to something other than an injection well.

Provide a **NARRATIVE DESCRIPTION** of the work planned to be performed, or that was performed. The narrative should include a description of the main procedures planned or that occurred during the work activity. A service company report, daily report, or similar document may be attached if it includes all the requested information and is clear and legible.

For well reworks, include the following information: The reason for the well rework; depths of activity; type of activity; changes to injection well configuration, well casing, or cement behind casing; any plug added to the well and its depth; any newly drilled interval and its depth; method(s) to demonstrate that the well has mechanical integrity (as applicable); and any deviations from the approved rework plan (as applicable).

For a well plugging plan, include the following information: Reason for the well plugging; number of plugs placed, and their depths; materials used as plugs (e.g., cast iron bridge plug, cement, cement retainer); method to set plugs; and wait-on-cement times, if any. Also provide one or more cost estimates from an independent firm in the business of plugging and abandoning wells to plug the well as described in the plan.

For well plugging affidavit, include the following information: Reason for the well plugging; number of plugs placed, and their depths; materials used as plugs (e.g., cast iron bridge plug, cement, cement retainer); method to set plugs; wait-on-cement times, if any; and any deviations from the approved plugging plan (if applicable).

For conversion to a non-injection well, include the following information: Depths of activity; type of activity; changes to injection well configuration, well casing, or cement behind casing; any plug added to the well and its depth; any newly drilled interval and its depth; depths of new perforations; and method(s) to demonstrate that the well has mechanical integrity (as applicable).

For all of the above activities, include a well sketch depicting the work, results of well tests/logging performed, service company tickets, and any other available information demonstrating how the work was/is to be performed. Also, specify whether depths are below ground surface, relative to Kelly bushing, etc.

CERTIFICATION: This form must be signed and dated by either: a responsible corporate officer for a corporation, by a general partner for a partnership, by the proprietor of a sole proprietorship, or by a principal executive or ranking elected official for a public agency.

PAPERWORK REDUCTION ACT NOTICE: The public reporting and recordkeeping burden for this collection of information is estimated to average between 6.0 and 7.9 hours per response, depending on the injection well class. Burden means the total time, effort, or financial resource expended by persons to generate, maintain, retain, or disclose or provide information to or for a Federal Agency. This includes the time needed to review instructions; develop, acquire, install, and utilize technology and systems for the purposes of collecting, validating, and verifying information, processing and maintaining information, and disclosing and providing information; adjust the existing ways to comply with any previously applicable instructions and requirements; train personnel to be able to respond to the collection of information; search data sources; complete and review the collection of information; and, transmit or otherwise disclose the information. An agency may not conduct or sponsor, and a person is not required to respond to, a collection of information unless it displays a currently valid OMB control number. Send comments on the Agency's need for this information, the accuracy of the provided burden estimates, and any suggested methods for minimizing respondent burden, including the use of automated collection techniques to Director, Collection Strategies Division, U.S. Environmental Protection Agency (2822), 1200 Pennsylvania Ave., NW., Washington, D.C. 20460. Include the OMB control number in any correspondence. Do not send the completed forms to this address.

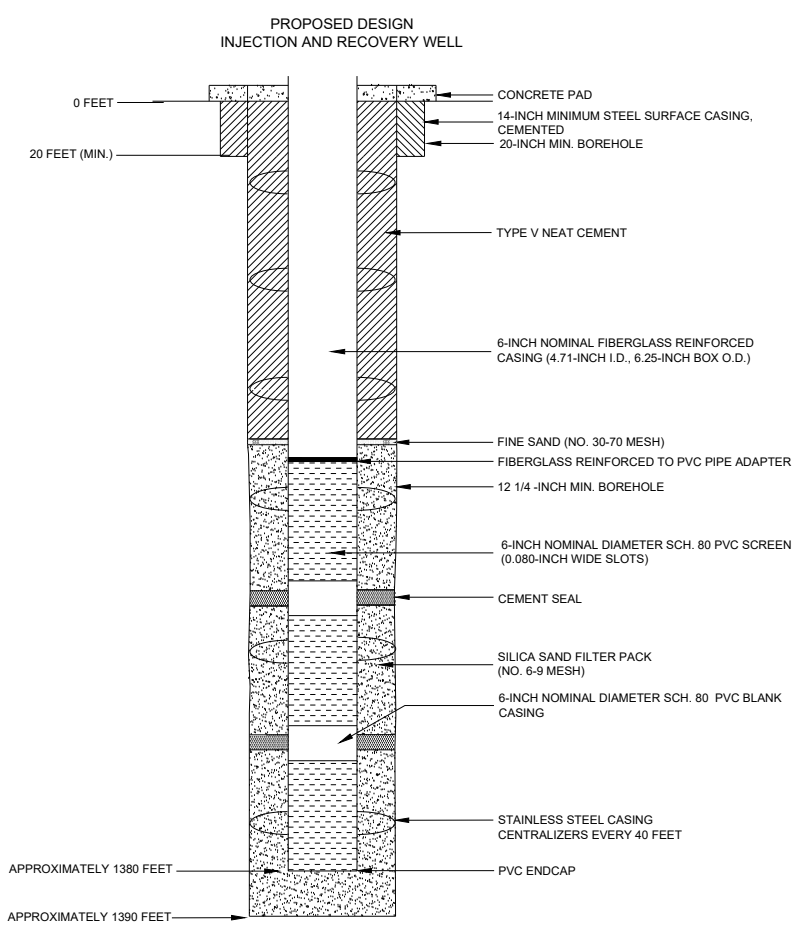

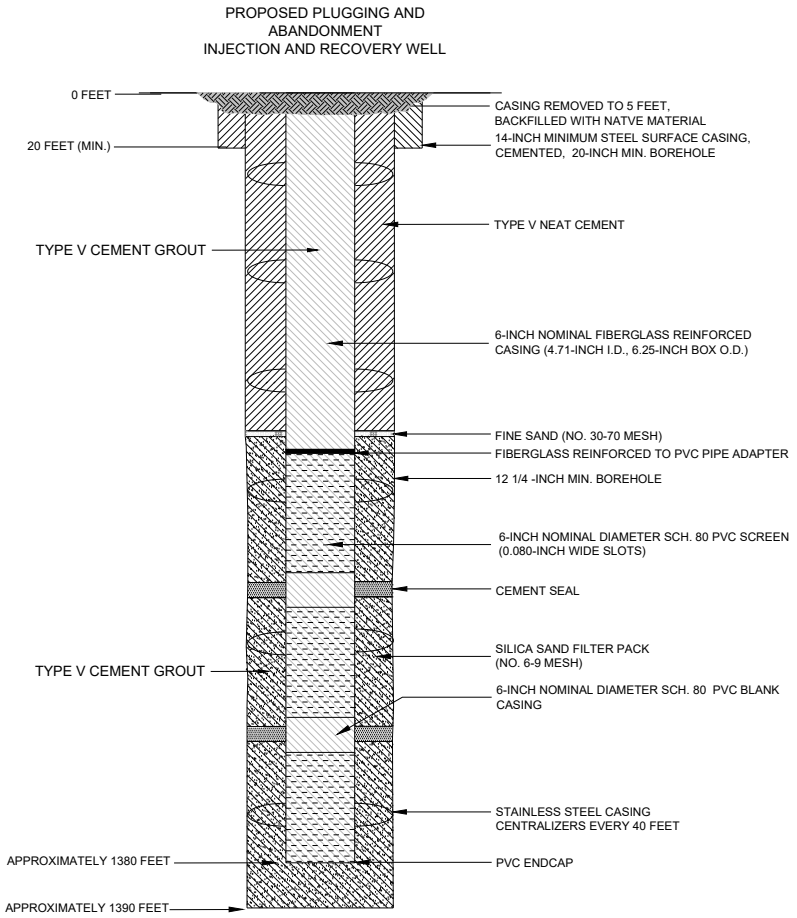

NOTES

1. WELL DESIGN DETAILS ARE BASED ON CORE HOLE AND WELL LOG RECORDS.

HALEY ALDRICH

FLORENCE COPPER, INC.
FLORENCE, ARIZONA

ABANDONMENT SCHEMATIC
RESOURCE BLOCK 44
TYPICAL INJECTION AND RECOVERY WELL

SCALE: AS SHOWN
JULY 2019

FIGURE E-16a

PROPOSED DESIGN
OBSERVATION/PERIMETER WELL

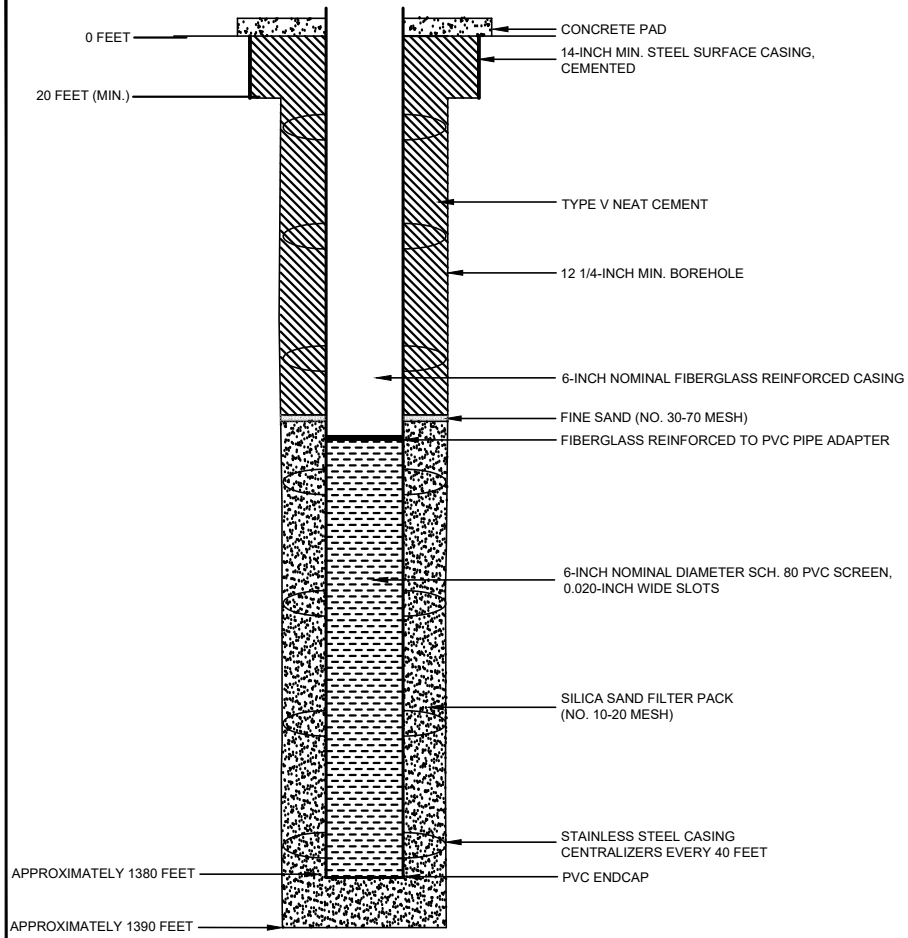

PROPOSED PLUGGING AND
ABANDONMENT
OBSERVATION/PERIMETER WELL

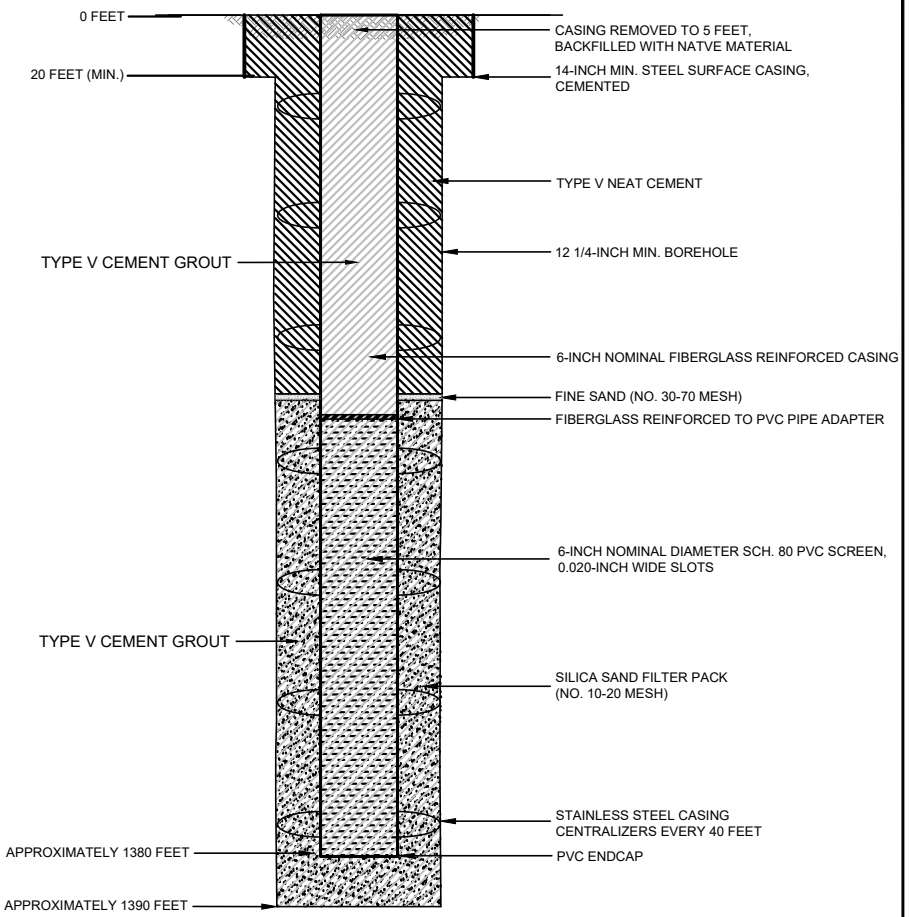

NOTES

1. WELL DESIGN DETAILS ARE BASED ON CORE HOLE AND WELL LOG RECORDS.

HALEY ALDRICH

FLORENCE COPPER, INC.
FLORENCE, ARIZONA

ABANDONMENT SCHEMATIC
RESOURCE BLOCK 44
OBSERVATION/PERIMETER WELL

JULY 2019
SCALE: AS SHOWN

FIGURE E-16b

TABLE E-16
WELLS WITHIN RESOURCE BLOCK 44
FLORENCE COPPER PROJECT
FLORENCE, ARIZONA

Well Number	Easting	Northing	Resource Block	Depth to Top of Bedrock (ft bgs)	Depth to Top of Injection Zone (ft bgs)	Depth to Bottom of Injection Zone (ft bgs)
472	847129	746060	44	705	745	1380
473	847200	746131	44	705	745	1380
474	847270	746202	44	705	745	1380
475	847270	746273	44	705	745	1380
476	847200	746202	44	705	745	1380
477	847129	746131	44	705	745	1380
479	847058	745990	44	705	745	1380
480	846988	745990	44	705	745	1380
478	847058	746060	44	705	745	1380
519	847341	746273	44	705	745	1380
747	847058	746555	44	705	745	1380
750	847058	746131	44	705	745	1380
751	847129	746202	44	705	745	1380
752	847200	746273	44	705	745	1380
753	847270	746343	44	705	745	1380
757	847200	746343	44	705	745	1380
758	847129	746273	44	705	745	1380
759	847058	746202	44	705	745	1380
760	846988	746131	44	705	745	1380
761	847058	746273	44	705	745	1380
762	847129	746343	44	705	745	1380
763	847200	746414	44	705	745	1380
766	847129	746414	44	705	745	1380
767	847058	746343	44	705	745	1380
768	846988	746273	44	705	745	1380
769	847129	746485	44	705	745	1380
770	847058	746485	44	705	745	1380
771	847058	746414	44	705	745	1380
895	846988	746202	44	705	745	1380
898	846988	746060	44	705	745	1380
902	846988	746343	44	705	745	1380
O40	846846	746060	44	705	745	1380
O41	846846	746343	44	705	745	1380
O42	846917	746626	44	705	745	1380
P78	846917	745990	44	705	745	1380
P79	846917	746131	44	705	745	1380
P80	846917	746273	44	705	745	1380
P81	846988	746414	44	705	745	1380
P82	846988	746555	44	705	745	1380

Notes:

ft bgs = feet below ground surface

OMB No. 2040-0042 Approval Expires 4/30/2022

United States Environmental Protection Agency

WELL REWORK RECORD, PLUGGING AND ABANDONMENT PLAN, OR PLUGGING AND ABANDONMENT AFFIDAVIT

Name and Address, Phone Number and/or Email of Permittee

Florence Copper Project
1575 W Hunt Hwy,
Florence, AZ 85132

Permit or EPA ID Number	API Number	Full Well Name
R9UIC-AZ3-FY11-1		Block 45 Wells - See Attached Table E-17

State	County
Arizona	Pinal

Locate well in two directions from nearest lines of quarter section and drilling unit

Surface Location

NE 1/4 of SW 1/4 of Section 28 Township 4S Range 9E

_____ ft. from (N/S) _____ Line of quarter section

_____ ft. from (E/W) _____ Line of quarter section.

Latitude 33.050597

Longitude -111.434617

See Attached Table for Individual Well Coordinates.

Well Class	Timing of Action (pick one)	Type of Action (pick one)
☐ Class I ☐ Class II ☑ Class III ☐ Class V	☑ Notice Prior to Work Date Expected to Commence January 2027 ☐ Report After Work Date Work Ended	☐ Well Rework ☑ Plugging and Abandonment ☐ Conversion to a Non-Injection Well

Provide a narrative description of the work planned to be performed, or that was performed. Use additional pages as necessary. See instructions.

This plugging and abandonment applies to wells Class III wells to be constructed in block 45. There are 50 Class III multi-use injection/ recovery wells, planned for construction in this block. The injection and recovery wells will be of uniform design, and will be used for injection and recovery on an alternate basis. Some of the injection and recovery wells will be used as perimeter and observation wells prior to well field build-out.

The work performed includes plugging and abandonment of the Class III wells in resource block 45. Plugging and abandonment will be accomplished following procedures defined in Attachment E of the application. Plugging and abandonment details are shown on the attached Figure E-17.

Certification

I certify under the penalty of law that I have personally examined and am familiar with the information submitted in this document and all attachments and that, based on my inquiry of those individuals immediately responsible for obtaining the information, I believe that the information is true, accurate, and complete. I am aware that there are significant penalties for submitting false information, including the possibliity of fine and imprisonment. (Ref. 40 CFR § 144.32)

Name and Official Title *(Please type or print)*	Signature	Date Signed
Dan Johnson, VP - General Manager		10/3/2019

INSTRUCTIONS FOR FORM 7520-19

This form replaces forms 7520-12 and 7520-14. Use this form only when work is planned or has occurred that affects the well's construction or operation as an injection well, including work on the casing, tubing or packer (or for shallow Class V wells, the subsurface fluid emplacement network). Use one form per injection well. While reports or other information developed by contractors or service companies may be attached, this form must be signed by a responsible entity as described at 40 CFR 144.32. Note: operators closing Class V wells should use Form 7520-17.

NAME, ADDRESS, PHONE AND/OR EMAIL OF PERMITTEE: Enter the name and street address, city/town, state, and ZIP code of the permittee. Also provide an email address (if available) and/or a phone number.

PERMIT OR EPA ID NUMBER: Enter the well identification number or permit number assigned to the well by the EPA or the permitting authority.

API NUMBER: Enter the number assigned by the local jurisdiction (usually a State Oil and Gas Agency) using the American Petroleum Institute standard numbering system.

FULL WELL NAME: Enter the full name of the well or project.

Enter the **STATE** and **COUNTY** where the well is located. For States that do not have counties, use the name of that State's equivalent jurisdiction at a more local level.

WELL LOCATION: Fill in the complete township, range, and section to the nearest quarter-quarter section. A township is north or south of the baseline, and a range is east or west of the principal meridian (e.g., T12N, R34W). Also include the distance, in feet, from the nearest north or south line and nearest east or west line of the quarter-section. Also, enter the **latitude** and **longitude** of the well in decimal degrees, to five or six places if possible; be sure to include a negative sign for the longitude of a well in the Western Hemisphere and a negative sign for the latitude of a well in the Southern Hemisphere.

Enter the **WELL CLASS,** i.e., the class of injection well as defined in 40 CFR 144.6.

TIMING OF THE ACTION: Check ***Notice prior to work*** if the activity has not yet occurred (i.e., is planned). Check ***Report after work*** if the activity described has already occurred. As appropriate, include the date the activity is expected to start or the date the activity was completed. (Note this may not be available, e.g., for a plugging plan submitted with a permit application.)

TYPE OF ACTION: Check the appropriate box to describe the kind of activity being reported. Check ***Well Rework*** for work that was/will be performed on the well after it has already been in operation as an injection well. Check ***Plugging and Abandonment*** to report on plans for or descriptions of final closure/plugging after use as an injection well. Check ***Conversion to a Non-Injection Well*** if the well is to be converted to something other than an injection well.

Provide a **NARRATIVE DESCRIPTION** of the work planned to be performed, or that was performed. The narrative should include a description of the main procedures planned or that occurred during the work activity. A service company report, daily report, or similar document may be attached if it includes all the requested information and is clear and legible.

For well reworks, include the following information: The reason for the well rework; depths of activity; type of activity; changes to injection well configuration, well casing, or cement behind casing; any plug added to the well and its depth; any newly drilled interval and its depth; method(s) to demonstrate that the well has mechanical integrity (as applicable); and any deviations from the approved rework plan (as applicable).

For a well plugging plan, include the following information: Reason for the well plugging; number of plugs placed, and their depths; materials used as plugs (e.g., cast iron bridge plug, cement, cement retainer); method to set plugs; and wait-on-cement times, if any. Also provide one or more cost estimates from an independent firm in the business of plugging and abandoning wells to plug the well as described in the plan.

For well plugging affidavit, include the following information: Reason for the well plugging; number of plugs placed, and their depths; materials used as plugs (e.g., cast iron bridge plug, cement, cement retainer); method to set plugs; wait-on-cement times, if any; and any deviations from the approved plugging plan (if applicable).

For conversion to a non-injection well, include the following information: Depths of activity; type of activity; changes to injection well configuration, well casing, or cement behind casing; any plug added to the well and its depth; any newly drilled interval and its depth; depths of new perforations; and method(s) to demonstrate that the well has mechanical integrity (as applicable).

For all of the above activities, include a well sketch depicting the work, results of well tests/logging performed, service company tickets, and any other available information demonstrating how the work was/is to be performed. Also, specify whether depths are below ground surface, relative to Kelly bushing, etc.

CERTIFICATION: This form must be signed and dated by either: a responsible corporate officer for a corporation, by a general partner for a partnership, by the proprietor of a sole proprietorship, or by a principal executive or ranking elected official for a public agency.

PAPERWORK REDUCTION ACT NOTICE: The public reporting and recordkeeping burden for this collection of information is estimated to average between 6.0 and 7.9 hours per response, depending on the injection well class. Burden means the total time, effort, or financial resource expended by persons to generate, maintain, retain, or disclose or provide information to or for a Federal Agency. This includes the time needed to review instructions; develop, acquire, install, and utilize technology and systems for the purposes of collecting, validating, and verifying information, processing and maintaining information, and disclosing and providing information; adjust the existing ways to comply with any previously applicable instructions and requirements; train personnel to be able to respond to the collection of information; search data sources; complete and review the collection of information; and, transmit or otherwise disclose the information. An agency may not conduct or sponsor, and a person is not required to respond to, a collection of information unless it displays a currently valid OMB control number. Send comments on the Agency's need for this information, the accuracy of the provided burden estimates, and any suggested methods for minimizing respondent burden, including the use of automated collection techniques to Director, Collection Strategies Division, U.S. Environmental Protection Agency (2822), 1200 Pennsylvania Ave., NW., Washington, D.C. 20460. Include the OMB control number in any correspondence. Do not send the completed forms to this address.

PROPOSED DESIGN
INJECTION AND RECOVERY WELL

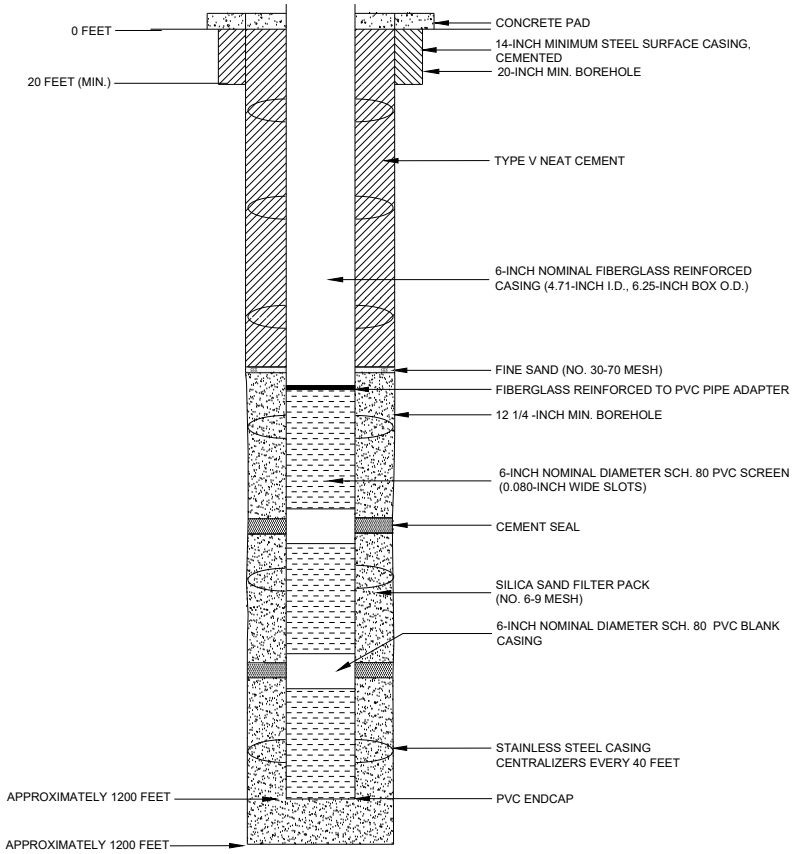

PROPOSED PLUGGING AND
ABANDONMENT
INJECTION AND RECOVERY WELL

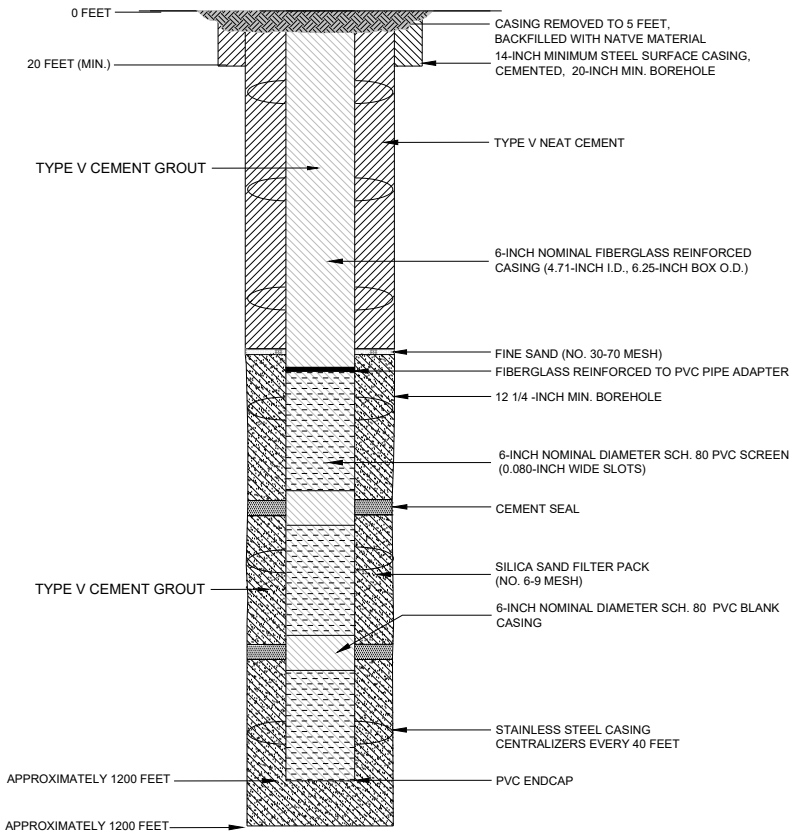

NOTES

1. WELL DESIGN DETAILS ARE BASED ON CORE HOLE AND WELL LOG RECORDS.

HALEY ALDRICH

FLORENCE COPPER, INC.
FLORENCE, ARIZONA

ABANDONMENT SCHEMATIC
RESOURCE BLOCK 45
TYPICAL INJECTION AND
RECOVERY WELL

SCALE: AS SHOWN
JULY 2019

FIGURE E-17

TABLE E-17
WELLS WITHIN RESOURCE BLOCK 45
FLORENCE COPPER PROJECT
FLORENCE, ARIZONA

Well Number	Easting	Northing	Resource Block	Depth to Top of Bedrock (ft bgs)	Depth to Top of Injection Zone (ft bgs)	Depth to Bottom of Injection Zone (ft bgs)
420	847624	746061	45	465	505	1200
421	847977	746202	45	465	505	1200
422	847907	746131	45	465	505	1200
423	847836	746061	45	465	505	1200
424	847765	745990	45	465	505	1200
425	847977	746273	45	465	505	1200
426	847907	746202	45	465	505	1200
427	847836	746131	45	465	505	1200
428	847765	746061	45	465	505	1200
429	847695	745990	45	465	505	1200
467	848048	746273	45	465	505	1200
481	847553	746131	45	465	505	1200
484	847483	746202	45	465	505	1200
485	847412	746273	45	465	505	1200
526	847553	746202	45	465	505	1200
527	847483	746273	45	465	505	1200
528	847553	746273	45	465	505	1200
529	847483	746343	45	465	505	1200
530	847553	746414	45	465	505	1200
531	847553	746343	45	465	505	1200
532	847624	746202	45	465	505	1200
533	847624	746131	45	465	505	1200
534	847625	746272	45	465	505	1200
535	847624	746343	45	465	505	1200
536	847624	746485	45	465	505	1200
537	847624	746414	45	465	505	1200
539	847765	746555	45	465	505	1200
541	847695	746555	45	465	505	1200
542	847695	746061	45	465	505	1200
543	847765	746131	45	465	505	1200
544	847836	746202	45	465	505	1200
545	847907	746273	45	465	505	1200
546	847695	746202	45	465	505	1200
547	847765	746273	45	465	505	1200
548	847836	746343	45	465	505	1200
549	847907	746343	45	465	505	1200
550	847836	746273	45	465	505	1200
551	847765	746202	45	465	505	1200
552	847695	746131	45	465	505	1200

TABLE E-17
WELLS WITHIN RESOURCE BLOCK 45
FLORENCE COPPER PROJECT
FLORENCE, ARIZONA

Well Number	Easting	Northing	Resource Block	Depth to Top of Bedrock (ft bgs)	Depth to Top of Injection Zone (ft bgs)	Depth to Bottom of Injection Zone (ft bgs)
553	847695	746343	45	465	505	1200
554	847765	746414	45	465	505	1200
555	847836	746414	45	465	505	1200
556	847765	746343	45	465	505	1200
557	847695	746273	45	465	505	1200
558	847765	746485	45	465	505	1200
559	847695	746414	45	465	505	1200
560	847695	746485	45	465	505	1200
562	847836	746485	45	465	505	1200
564	847907	746414	45	465	505	1200
565	847977	746343	45	465	505	1200

Notes:

ft bgs = feet below ground surface

OMB No. 2040-0042 Approval Expires 4/30/2022

United States Environmental Protection Agency

WELL REWORK RECORD, PLUGGING AND ABANDONMENT PLAN, OR PLUGGING AND ABANDONMENT AFFIDAVIT

Name and Address, Phone Number and/or Email of Permittee

Florence Copper Project
1575 W Hunt Hwy,
Florence, AZ 85132

Permit or EPA ID Number	API Number	Full Well Name
R9UIC-AZ3-FY11-1		Block 46 Wells - See Attached Table E-18

State	County
Arizona	Pinal

Locate well in two directions from nearest lines of quarter section and drilling unit

Surface Location

NE 1/4 of SW 1/4 of Section 28 Township 4S Range 9E

_____ ft. from (N/S) _____ Line of quarter section

_____ ft. from (E/W) _____ Line of quarter section.

Latitude 33.050571

Longitude -111.432280

See Attached Table for Individual Well Coordinates.

Well Class	Timing of Action (pick one)	Type of Action (pick one)
☐ Class I ☐ Class II ☑ Class III ☐ Class V	☑ Notice Prior to Work Date Expected to Commence January 2027 ☐ Report After Work Date Work Ended	☐ Well Rework ☑ Plugging and Abandonment ☐ Conversion to a Non-Injection Well

Provide a narrative description of the work planned to be performed, or that was performed. Use additional pages as necessary. See instructions.

This plugging and abandonment applies to wells Class III wells to be constructed in block 46. There are 49 Class III multi-use injection/ recovery wells, planned for construction in this block. The injection and recovery wells will be of uniform design, and will be used for injection and recovery on an alternate basis. Some of the injection and recovery wells will be used as perimeter and observation wells prior to well field build-out.

The work performed includes plugging and abandonment of the Class III wells in resource block 46. Plugging and abandonment will be accomplished following procedures defined in Attachment E of the application. Plugging and abandonment details are shown on the attached Figure E-18.

Certification

I certify under the penalty of law that I have personally examined and am familiar with the information submitted in this document and all attachments and that, based on my inquiry of those individuals immediately responsible for obtaining the information, I believe that the information is true, accurate, and complete. I am aware that there are significant penalties for submitting false information, including the possibliity of fine and imprisonment. (Ref. 40 CFR § 144.32)

Name and Official Title *(Please type or print)*	Signature	Date Signed
Dan Johnson, VP - General Manager		10/3/2019

INSTRUCTIONS FOR FORM 7520-19

This form replaces forms 7520-12 and 7520-14. Use this form only when work is planned or has occurred that affects the well's construction or operation as an injection well, including work on the casing, tubing or packer (or for shallow Class V wells, the subsurface fluid emplacement network). Use one form per injection well. While reports or other information developed by contractors or service companies may be attached, this form must be signed by a responsible entity as described at 40 CFR 144.32. Note: operators closing Class V wells should use Form 7520-17.

NAME, ADDRESS, PHONE AND/OR EMAIL OF PERMITTEE: Enter the name and street address, city/town, state, and ZIP code of the permittee. Also provide an email address (if available) and/or a phone number.

PERMIT OR EPA ID NUMBER: Enter the well identification number or permit number assigned to the well by the EPA or the permitting authority.

API NUMBER: Enter the number assigned by the local jurisdiction (usually a State Oil and Gas Agency) using the American Petroleum Institute standard numbering system.

FULL WELL NAME: Enter the full name of the well or project.

Enter the **STATE** and **COUNTY** where the well is located. For States that do not have counties, use the name of that State's equivalent jurisdiction at a more local level.

WELL LOCATION: Fill in the complete township, range, and section to the nearest quarter-quarter section. A township is north or south of the baseline, and a range is east or west of the principal meridian (e.g., T12N, R34W). Also include the distance, in feet, from the nearest north or south line and nearest east or west line of the quarter-section. Also, enter the **latitude** and **longitude** of the well in decimal degrees, to five or six places if possible; be sure to include a negative sign for the longitude of a well in the Western Hemisphere and a negative sign for the latitude of a well in the Southern Hemisphere.

Enter the **WELL CLASS,** i.e., the class of injection well as defined in 40 CFR 144.6.

TIMING OF THE ACTION: Check ***Notice prior to work*** if the activity has not yet occurred (i.e., is planned). Check ***Report after work*** if the activity described has already occurred. As appropriate, include the date the activity is expected to start or the date the activity was completed. (Note this may not be available, e.g., for a plugging plan submitted with a permit application.)

TYPE OF ACTION: Check the appropriate box to describe the kind of activity being reported. Check ***Well Rework*** for work that was/will be performed on the well after it has already been in operation as an injection well. Check ***Plugging and Abandonment*** to report on plans for or descriptions of final closure/plugging after use as an injection well. Check ***Conversion to a Non-Injection Well*** if the well is to be converted to something other than an injection well.

Provide a **NARRATIVE DESCRIPTION** of the work planned to be performed, or that was performed. The narrative should include a description of the main procedures planned or that occurred during the work activity. A service company report, daily report, or similar document may be attached if it includes all the requested information and is clear and legible.

For well reworks, include the following information: The reason for the well rework; depths of activity; type of activity; changes to injection well configuration, well casing, or cement behind casing; any plug added to the well and its depth; any newly drilled interval and its depth; method(s) to demonstrate that the well has mechanical integrity (as applicable); and any deviations from the approved rework plan (as applicable).

For a well plugging plan, include the following information: Reason for the well plugging; number of plugs placed, and their depths; materials used as plugs (e.g., cast iron bridge plug, cement, cement retainer); method to set plugs; and wait-on-cement times, if any. Also provide one or more cost estimates from an independent firm in the business of plugging and abandoning wells to plug the well as described in the plan.

For well plugging affidavit, include the following information: Reason for the well plugging; number of plugs placed, and their depths; materials used as plugs (e.g., cast iron bridge plug, cement, cement retainer); method to set plugs; wait-on-cement times, if any; and any deviations from the approved plugging plan (if applicable).

For conversion to a non-injection well, include the following information: Depths of activity; type of activity; changes to injection well configuration, well casing, or cement behind casing; any plug added to the well and its depth; any newly drilled interval and its depth; depths of new perforations; and method(s) to demonstrate that the well has mechanical integrity (as applicable).

For all of the above activities, include a well sketch depicting the work, results of well tests/logging performed, service company tickets, and any other available information demonstrating how the work was/is to be performed. Also, specify whether depths are below ground surface, relative to Kelly bushing, etc.

CERTIFICATION: This form must be signed and dated by either: a responsible corporate officer for a corporation, by a general partner for a partnership, by the proprietor of a sole proprietorship, or by a principal executive or ranking elected official for a public agency.

PAPERWORK REDUCTION ACT NOTICE: The public reporting and recordkeeping burden for this collection of information is estimated to average between 6.0 and 7.9 hours per response, depending on the injection well class. Burden means the total time, effort, or financial resource expended by persons to generate, maintain, retain, or disclose or provide information to or for a Federal Agency. This includes the time needed to review instructions; develop, acquire, install, and utilize technology and systems for the purposes of collecting, validating, and verifying information, processing and maintaining information, and disclosing and providing information; adjust the existing ways to comply with any previously applicable instructions and requirements; train personnel to be able to respond to the collection of information; search data sources; complete and review the collection of information; and, transmit or otherwise disclose the information. An agency may not conduct or sponsor, and a person is not required to respond to, a collection of information unless it displays a currently valid OMB control number. Send comments on the Agency's need for this information, the accuracy of the provided burden estimates, and any suggested methods for minimizing respondent burden, including the use of automated collection techniques to Director, Collection Strategies Division, U.S. Environmental Protection Agency (2822), 1200 Pennsylvania Ave., NW., Washington, D.C. 20460. Include the OMB control number in any correspondence. Do not send the completed forms to this address.

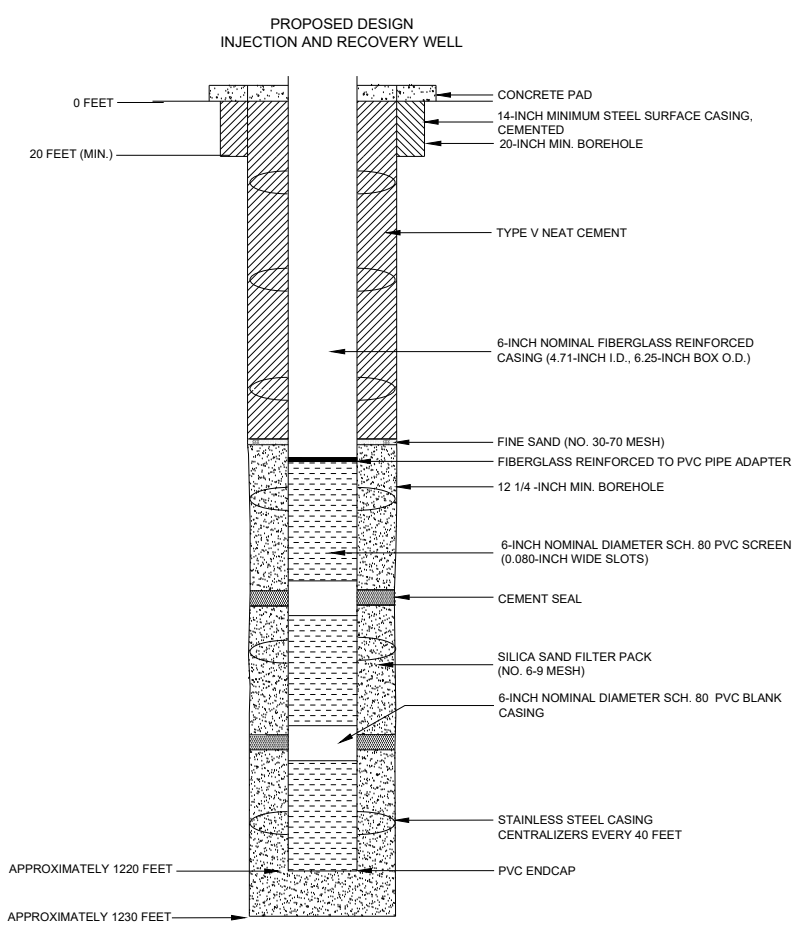

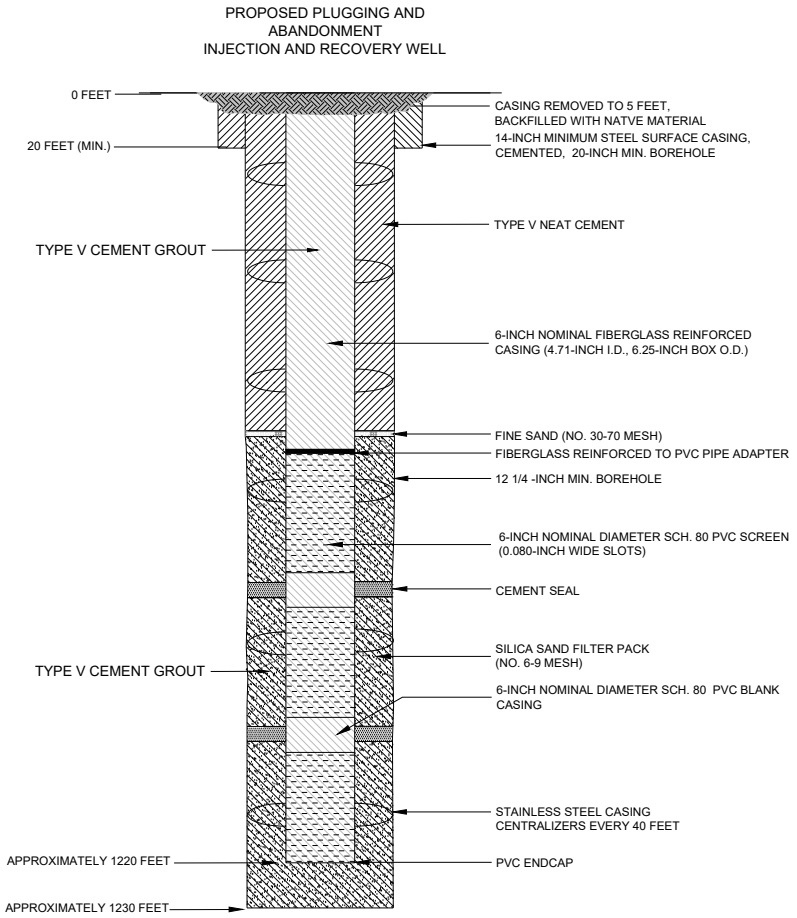

NOTES

1. WELL DESIGN DETAILS ARE BASED ON CORE HOLE AND WELL LOG RECORDS.

HALEY ALDRICH

FLORENCE COPPER, INC.
FLORENCE, ARIZONA

ABANDONMENT SCHEMATIC
RESOURCE BLOCK 46
TYPICAL INJECTION AND RECOVERY WELL

SCALE: AS SHOWN
JULY 2019

FIGURE E-18

TABLE E-18
WELLS WITHIN RESOURCE BLOCK 46
FLORENCE COPPER PROJECT
FLORENCE, ARIZONA

Well Number	Easting	Northing	Resource Block	Depth to Top of Bedrock (ft bgs)	Depth to Top of Injection Zone (ft bgs)	Depth to Bottom of Injection Zone (ft bgs)
344	848402	746528	46	412	452	1220
345	848685	746202	46	412	452	1220
346	848614	746131	46	412	452	1220
347	848543	746061	46	412	452	1220
348	848472	746131	46	412	452	1220
349	848543	746202	46	412	452	1220
350	848614	746273	46	412	452	1220
351	848685	746273	46	412	452	1220
352	848614	746202	46	412	452	1220
353	848543	746131	46	412	452	1220
354	848331	746131	46	412	452	1220
355	848402	746202	46	412	452	1220
356	848472	746273	46	412	452	1220
357	848543	746343	46	412	452	1220
358	848614	746343	46	412	452	1220
359	848543	746273	46	412	452	1220
360	848472	746202	46	412	452	1220
361	848402	746131	46	412	452	1220
362	848331	746061	46	412	452	1220
363	848260	746202	46	412	452	1220
364	848331	746273	46	412	452	1220
365	848402	746343	46	412	452	1220
366	848472	746414	46	412	452	1220
367	848543	746414	46	412	452	1220
368	848472	746343	46	412	452	1220
369	848402	746273	46	412	452	1220
370	848331	746202	46	412	452	1220
371	848260	746131	46	412	452	1220
372	848472	746485	46	412	452	1220
373	848402	746414	46	412	452	1220
374	848331	746343	46	412	452	1220
375	848260	746273	46	412	452	1220
376	848190	746202	46	412	452	1220
377	848190	746273	46	412	452	1220
378	848260	746343	46	412	452	1220
379	848331	746414	46	412	452	1220
380	848402	746485	46	412	452	1220
381	848331	746485	46	412	452	1220
382	848260	746414	46	412	452	1220

TABLE E-18
WELLS WITHIN RESOURCE BLOCK 46
FLORENCE COPPER PROJECT
FLORENCE, ARIZONA

Well Number	Easting	Northing	Resource Block	Depth to Top of Bedrock (ft bgs)	Depth to Top of Injection Zone (ft bgs)	Depth to Bottom of Injection Zone (ft bgs)
383	848190	746343	46	412	452	1220
384	848119	746273	46	412	452	1220
386	848543	746485	46	412	452	1220
388	848614	746414	46	412	452	1220
389	848685	746343	46	412	452	1220
390	848756	746272	46	412	452	1220
414	848402	746061	46	412	452	1220
415	848471	746061	46	412	452	1220
416	848402	745990	46	412	452	1220
417	848472	745990	46	412	452	1220

Notes:

ft bgs = feet below ground surface

OMB No. 2040-0042 Approval Expires 4/30/2022

United States Environmental Protection Agency

WELL REWORK RECORD, PLUGGING AND ABANDONMENT PLAN, OR PLUGGING AND ABANDONMENT AFFIDAVIT

Name and Address, Phone Number and/or Email of Permittee

Florence Copper Project
1575 W Hunt Hwy,
Florence, AZ 85132

Permit or EPA ID Number	API Number	Full Well Name
R9UIC-AZ3-FY11-1		Block 47 Wells - See Attached Table E-19

State	County
Arizona	Pinal

Locate well in two directions from nearest lines of quarter section and drilling unit

Surface Location

NW 1/4 of SE 1/4 of Section 28 Township 4S Range 9E

_____ ft. from (N/S) _____ Line of quarter section

_____ ft. from (E/W) _____ Line of quarter section.

Latitude 33.050530

Longitude -111.429954

See Attached Table for Individual Well Coordinates.

Well Class	Timing of Action (pick one)	Type of Action (pick one)
☐ Class I ☐ Class II ☑ Class III ☐ Class V	☑ Notice Prior to Work Date Expected to Commence January 2027 ☐ Report After Work Date Work Ended	☐ Well Rework ☑ Plugging and Abandonment ☐ Conversion to a Non-Injection Well

Provide a narrative description of the work planned to be performed, or that was performed. Use additional pages as necessary. See instructions.

This plugging and abandonment applies to wells Class III wells to be constructed in block 47. There are 49 Class III multi-use injection/ recovery wells, planned for construction in this block. The injection and recovery wells will be of uniform design, and will be used for injection and recovery on an alternate basis. Some of the injection and recovery wells will be used as perimeter and observation wells prior to well field build-out.

The work performed includes plugging and abandonment of the Class III wells in resource block 47. Plugging and abandonment will be accomplished following procedures defined in Attachment E of the application. Plugging and abandonment details are shown on the attached Figure E-19.

Certification

I certify under the penalty of law that I have personally examined and am familiar with the information submitted in this document and all attachments and that, based on my inquiry of those individuals immediately responsible for obtaining the information, I believe that the information is true, accurate, and complete. I am aware that there are significant penalties for submitting false information, including the possibliity of fine and imprisonment. (Ref. 40 CFR § 144.32)

Name and Official Title *(Please type or print)*	Signature	Date Signed
Dan Johnson, VP - General Manager		10/3/2019

INSTRUCTIONS FOR FORM 7520-19

This form replaces forms 7520-12 and 7520-14. Use this form only when work is planned or has occurred that affects the well's construction or operation as an injection well, including work on the casing, tubing or packer (or for shallow Class V wells, the subsurface fluid emplacement network). Use one form per injection well. While reports or other information developed by contractors or service companies may be attached, this form must be signed by a responsible entity as described at 40 CFR 144.32. Note: operators closing Class V wells should use Form 7520-17.

NAME, ADDRESS, PHONE AND/OR EMAIL OF PERMITTEE: Enter the name and street address, city/town, state, and ZIP code of the permittee. Also provide an email address (if available) and/or a phone number.

PERMIT OR EPA ID NUMBER: Enter the well identification number or permit number assigned to the well by the EPA or the permitting authority.

API NUMBER: Enter the number assigned by the local jurisdiction (usually a State Oil and Gas Agency) using the American Petroleum Institute standard numbering system.

FULL WELL NAME: Enter the full name of the well or project.

Enter the **STATE** and **COUNTY** where the well is located. For States that do not have counties, use the name of that State's equivalent jurisdiction at a more local level.

WELL LOCATION: Fill in the complete township, range, and section to the nearest quarter-quarter section. A township is north or south of the baseline, and a range is east or west of the principal meridian (e.g., T12N, R34W). Also include the distance, in feet, from the nearest north or south line and nearest east or west line of the quarter-section. Also, enter the **latitude** and **longitude** of the well in decimal degrees, to five or six places if possible; be sure to include a negative sign for the longitude of a well in the Western Hemisphere and a negative sign for the latitude of a well in the Southern Hemisphere.

Enter the **WELL CLASS,** i.e., the class of injection well as defined in 40 CFR 144.6.

TIMING OF THE ACTION: Check ***Notice prior to work*** if the activity has not yet occurred (i.e., is planned). Check ***Report after work*** if the activity described has already occurred. As appropriate, include the date the activity is expected to start or the date the activity was completed. (Note this may not be available, e.g., for a plugging plan submitted with a permit application.)

TYPE OF ACTION: Check the appropriate box to describe the kind of activity being reported. Check ***Well Rework*** for work that was/will be performed on the well after it has already been in operation as an injection well. Check ***Plugging and Abandonment*** to report on plans for or descriptions of final closure/plugging after use as an injection well. Check ***Conversion to a Non-Injection Well*** if the well is to be converted to something other than an injection well.

Provide a **NARRATIVE DESCRIPTION** of the work planned to be performed, or that was performed. The narrative should include a description of the main procedures planned or that occurred during the work activity. A service company report, daily report, or similar document may be attached if it includes all the requested information and is clear and legible.

For well reworks, include the following information: The reason for the well rework; depths of activity; type of activity; changes to injection well configuration, well casing, or cement behind casing; any plug added to the well and its depth; any newly drilled interval and its depth; method(s) to demonstrate that the well has mechanical integrity (as applicable); and any deviations from the approved rework plan (as applicable).

For a well plugging plan, include the following information: Reason for the well plugging; number of plugs placed, and their depths; materials used as plugs (e.g., cast iron bridge plug, cement, cement retainer); method to set plugs; and wait-on-cement times, if any. Also provide one or more cost estimates from an independent firm in the business of plugging and abandoning wells to plug the well as described in the plan.

For well plugging affidavit, include the following information: Reason for the well plugging; number of plugs placed, and their depths; materials used as plugs (e.g., cast iron bridge plug, cement, cement retainer); method to set plugs; wait-on-cement times, if any; and any deviations from the approved plugging plan (if applicable).

For conversion to a non-injection well, include the following information: Depths of activity; type of activity; changes to injection well configuration, well casing, or cement behind casing; any plug added to the well and its depth; any newly drilled interval and its depth; depths of new perforations; and method(s) to demonstrate that the well has mechanical integrity (as applicable).

For all of the above activities, include a well sketch depicting the work, results of well tests/logging performed, service company tickets, and any other available information demonstrating how the work was/is to be performed. Also, specify whether depths are below ground surface, relative to Kelly bushing, etc.

CERTIFICATION: This form must be signed and dated by either: a responsible corporate officer for a corporation, by a general partner for a partnership, by the proprietor of a sole proprietorship, or by a principal executive or ranking elected official for a public agency.

PAPERWORK REDUCTION ACT NOTICE: The public reporting and recordkeeping burden for this collection of information is estimated to average between 6.0 and 7.9 hours per response, depending on the injection well class. Burden means the total time, effort, or financial resource expended by persons to generate, maintain, retain, or disclose or provide information to or for a Federal Agency. This includes the time needed to review instructions; develop, acquire, install, and utilize technology and systems for the purposes of collecting, validating, and verifying information, processing and maintaining information, and disclosing and providing information; adjust the existing ways to comply with any previously applicable instructions and requirements; train personnel to be able to respond to the collection of information; search data sources; complete and review the collection of information; and, transmit or otherwise disclose the information. An agency may not conduct or sponsor, and a person is not required to respond to, a collection of information unless it displays a currently valid OMB control number. Send comments on the Agency's need for this information, the accuracy of the provided burden estimates, and any suggested methods for minimizing respondent burden, including the use of automated collection techniques to Director, Collection Strategies Division, U.S. Environmental Protection Agency (2822), 1200 Pennsylvania Ave., NW., Washington, D.C. 20460. Include the OMB control number in any correspondence. Do not send the completed forms to this address.

PROPOSED DESIGN
INJECTION AND RECOVERY WELL

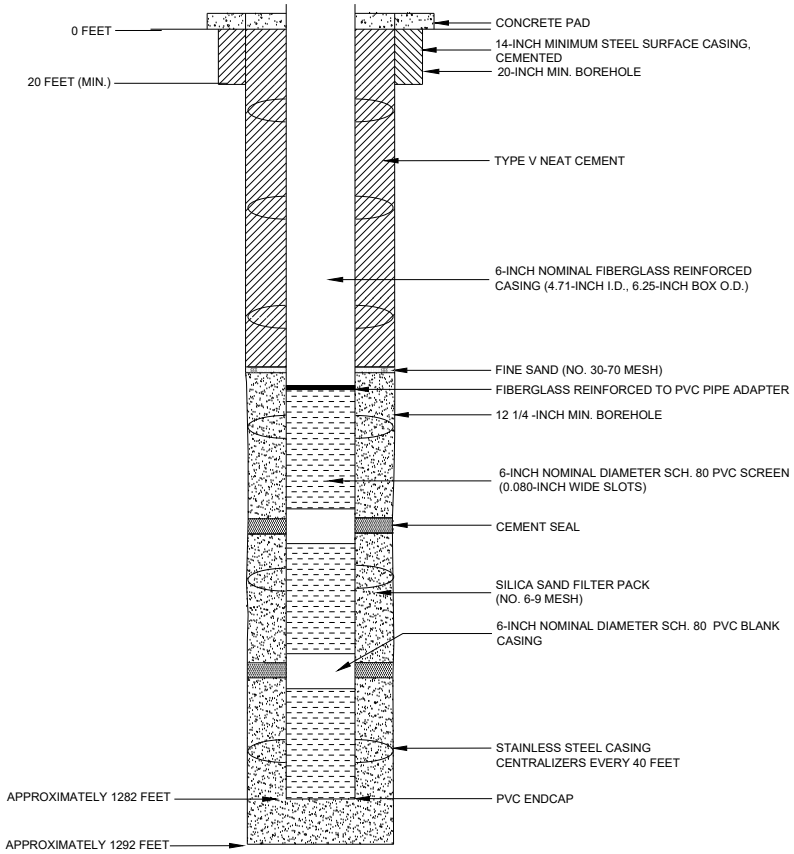

PROPOSED PLUGGING AND
ABANDONMENT
INJECTION AND RECOVERY WELL

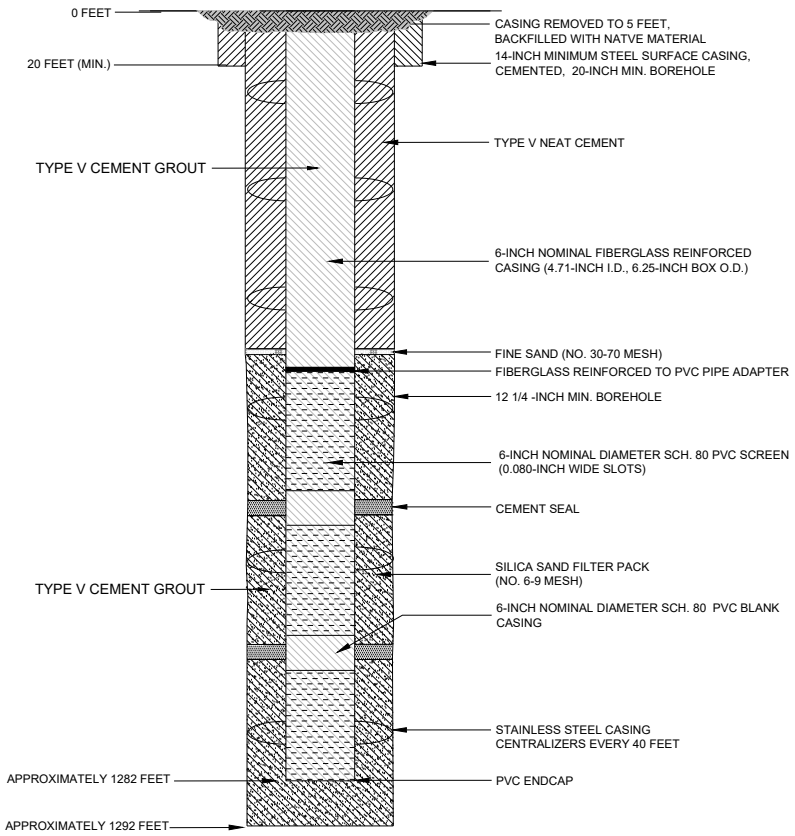

NOTES

1. WELL DESIGN DETAILS ARE BASED ON CORE HOLE AND WELL LOG RECORDS.

HALEY ALDRICH

FLORENCE COPPER, INC.
FLORENCE, ARIZONA

ABANDONMENT SCHEMATIC
RESOURCE BLOCK 47
TYPICAL INJECTION AND
RECOVERY WELL

SCALE: AS SHOWN
JULY 2019

FIGURE E-19

TABLE E-19
WELLS WITHIN RESOURCE BLOCK 47
FLORENCE COPPER PROJECT
FLORENCE, ARIZONA

Well Number	Easting	Northing	Resource Block	Depth to Top of Bedrock (ft bgs)	Depth to Top of Injection Zone (ft bgs)	Depth to Bottom of Injection Zone (ft bgs)
92	849038	746061	47	413	453	1282
93	849109	746131	47	413	453	1282
94	849109	746202	47	413	453	1282
95	849038	746131	47	413	453	1282
96	848967	746202	47	413	453	1282
97	849038	746273	47	413	453	1282
98	849109	746273	47	413	453	1282
99	849038	746194	47	413	453	1282
100	848967	746131	47	413	453	1282
101	848897	746273	47	413	453	1282
102	848967	746343	47	413	453	1282
103	849038	746343	47	413	453	1282
104	848967	746273	47	413	453	1282
105	848897	746202	47	413	453	1282
106	848967	746414	47	413	453	1282
107	848897	746343	47	413	453	1282
108	848816	746273	47	413	453	1282
109	849109	746485	47	413	453	1282
110	849038	746485	47	413	453	1282
111	849109	746414	47	413	453	1282
112	849038	746414	47	413	453	1282
113	849109	746343	47	413	453	1282
114	849109	746007	47	413	453	1282
115	849109	746061	47	413	453	1282
116	849321	746131	47	413	453	1282
117	849250	746131	47	413	453	1282
118	849250	746202	47	413	453	1282
119	849321	746273	47	413	453	1282
120	849250	746273	47	413	453	1282
121	849179	746202	47	413	453	1282
122	849179	746031	47	413	453	1282
123	849250	746061	47	413	453	1282
124	849179	746061	47	413	453	1282
125	849179	746131	47	413	453	1282
126	849180	746272	47	413	453	1282
127	849250	746343	47	413	453	1282
128	849179	746343	47	413	453	1282
129	849179	746414	47	413	453	1282
141	849109	746555	47	413	453	1282

TABLE E-19
WELLS WITHIN RESOURCE BLOCK 47
FLORENCE COPPER PROJECT
FLORENCE, ARIZONA

Well Number	Easting	Northing	Resource Block	Depth to Top of Bedrock (ft bgs)	Depth to Top of Injection Zone (ft bgs)	Depth to Bottom of Injection Zone (ft bgs)
187	849179	746556	47	413	453	1282
197	849382	746202	47	413	453	1282
198	849462	746273	47	413	453	1282
204	849392	746273	47	413	453	1282
205	849321	746202	47	413	453	1282
206	849392	746343	47	413	453	1282
211	849321	746343	47	413	453	1282
214	849250	746485	47	413	453	1282
215	849179	746485	47	413	453	1282
217	849250	746414	47	413	453	1282

Notes:

ft bgs = feet below ground surface

OMB No. 2040-0042 Approval Expires 4/30/2022

United States Environmental Protection Agency

WELL REWORK RECORD, PLUGGING AND ABANDONMENT PLAN, OR PLUGGING AND ABANDONMENT AFFIDAVIT

Name and Address, Phone Number and/or Email of Permittee

Florence Copper Project
1575 W Hunt Hwy,
Florence, AZ 85132

Permit or EPA ID Number	API Number	Full Well Name
R9UIC-AZ3-FY11-1		Block 48 Wells - See Attached Table E-20

State	County
Arizona	Pinal

Locate well in two directions from nearest lines of quarter section and drilling unit

Surface Location

NW 1/4 of SE 1/4 of Section 28 Township 4S Range 9E

_____ ft. from (N/S) _____ Line of quarter section

_____ ft. from (E/W) _____ Line of quarter section.

Latitude 33.050486

Longitude -111.427659

See Attached Table for Individual Well Coordinates.

Well Class	Timing of Action (pick one)	Type of Action (pick one)
☐ Class I ☐ Class II ☑ Class III ☐ Class V	☑ Notice Prior to Work Date Expected to Commence January 2027 ☐ Report After Work Date Work Ended	☐ Well Rework ☑ Plugging and Abandonment ☐ Conversion to a Non-Injection Well

Provide a narrative description of the work planned to be performed, or that was performed. Use additional pages as necessary. See instructions.

This plugging and abandonment applies to wells Class III wells to be constructed in block 48. There are 45 Class III multi-use injection/ recovery wells, planned for construction in this block. The injection and recovery wells will be of uniform design, and will be used for injection and recovery on an alternate basis. Some of the injection and recovery wells will be used as perimeter and observation wells prior to well field build-out.

The work performed includes plugging and abandonment of the Class III wells in resource block 48. Plugging and abandonment will be accomplished following procedures defined in Attachment E of the application. Plugging and abandonment details are shown on the attached Figure E-20.

Certification

I certify under the penalty of law that I have personally examined and am familiar with the information submitted in this document and all attachments and that, based on my inquiry of those individuals immediately responsible for obtaining the information, I believe that the information is true, accurate, and complete. I am aware that there are significant penalties for submitting false information, including the possibliity of fine and imprisonment. (Ref. 40 CFR § 144.32)

Name and Official Title *(Please type or print)*	Signature	Date Signed
Dan Johnson, VP - General Manager		10/3/2019

INSTRUCTIONS FOR FORM 7520-19

This form replaces forms 7520-12 and 7520-14. Use this form only when work is planned or has occurred that affects the well's construction or operation as an injection well, including work on the casing, tubing or packer (or for shallow Class V wells, the subsurface fluid emplacement network). Use one form per injection well. While reports or other information developed by contractors or service companies may be attached, this form must be signed by a responsible entity as described at 40 CFR 144.32. Note: operators closing Class V wells should use Form 7520-17.

NAME, ADDRESS, PHONE AND/OR EMAIL OF PERMITTEE: Enter the name and street address, city/town, state, and ZIP code of the permittee. Also provide an email address (if available) and/or a phone number.

PERMIT OR EPA ID NUMBER: Enter the well identification number or permit number assigned to the well by the EPA or the permitting authority.

API NUMBER: Enter the number assigned by the local jurisdiction (usually a State Oil and Gas Agency) using the American Petroleum Institute standard numbering system.

FULL WELL NAME: Enter the full name of the well or project.

Enter the **STATE** and **COUNTY** where the well is located. For States that do not have counties, use the name of that State's equivalent jurisdiction at a more local level.

WELL LOCATION: Fill in the complete township, range, and section to the nearest quarter-quarter section. A township is north or south of the baseline, and a range is east or west of the principal meridian (e.g., T12N, R34W). Also include the distance, in feet, from the nearest north or south line and nearest east or west line of the quarter-section. Also, enter the **latitude** and **longitude** of the well in decimal degrees, to five or six places if possible; be sure to include a negative sign for the longitude of a well in the Western Hemisphere and a negative sign for the latitude of a well in the Southern Hemisphere.

Enter the **WELL CLASS,** i.e., the class of injection well as defined in 40 CFR 144.6.

TIMING OF THE ACTION: Check ***Notice prior to work*** if the activity has not yet occurred (i.e., is planned). Check ***Report after work*** if the activity described has already occurred. As appropriate, include the date the activity is expected to start or the date the activity was completed. (Note this may not be available, e.g., for a plugging plan submitted with a permit application.)

TYPE OF ACTION: Check the appropriate box to describe the kind of activity being reported. Check ***Well Rework*** for work that was/will be performed on the well after it has already been in operation as an injection well. Check ***Plugging and Abandonment*** to report on plans for or descriptions of final closure/plugging after use as an injection well. Check ***Conversion to a Non-Injection Well*** if the well is to be converted to something other than an injection well.

Provide a **NARRATIVE DESCRIPTION** of the work planned to be performed, or that was performed. The narrative should include a description of the main procedures planned or that occurred during the work activity. A service company report, daily report, or similar document may be attached if it includes all the requested information and is clear and legible.

For well reworks, include the following information: The reason for the well rework; depths of activity; type of activity; changes to injection well configuration, well casing, or cement behind casing; any plug added to the well and its depth; any newly drilled interval and its depth; method(s) to demonstrate that the well has mechanical integrity (as applicable); and any deviations from the approved rework plan (as applicable).

For a well plugging plan, include the following information: Reason for the well plugging; number of plugs placed, and their depths; materials used as plugs (e.g., cast iron bridge plug, cement, cement retainer); method to set plugs; and wait-on-cement times, if any. Also provide one or more cost estimates from an independent firm in the business of plugging and abandoning wells to plug the well as described in the plan.

For well plugging affidavit, include the following information: Reason for the well plugging; number of plugs placed, and their depths; materials used as plugs (e.g., cast iron bridge plug, cement, cement retainer); method to set plugs; wait-on-cement times, if any; and any deviations from the approved plugging plan (if applicable).

For conversion to a non-injection well, include the following information: Depths of activity; type of activity; changes to injection well configuration, well casing, or cement behind casing; any plug added to the well and its depth; any newly drilled interval and its depth; depths of new perforations; and method(s) to demonstrate that the well has mechanical integrity (as applicable).

For all of the above activities, include a well sketch depicting the work, results of well tests/logging performed, service company tickets, and any other available information demonstrating how the work was/is to be performed. Also, specify whether depths are below ground surface, relative to Kelly bushing, etc.

CERTIFICATION: This form must be signed and dated by either: a responsible corporate officer for a corporation, by a general partner for a partnership, by the proprietor of a sole proprietorship, or by a principal executive or ranking elected official for a public agency.

PAPERWORK REDUCTION ACT NOTICE: The public reporting and recordkeeping burden for this collection of information is estimated to average between 6.0 and 7.9 hours per response, depending on the injection well class. Burden means the total time, effort, or financial resource expended by persons to generate, maintain, retain, or disclose or provide information to or for a Federal Agency. This includes the time needed to review instructions; develop, acquire, install, and utilize technology and systems for the purposes of collecting, validating, and verifying information, processing and maintaining information, and disclosing and providing information; adjust the existing ways to comply with any previously applicable instructions and requirements; train personnel to be able to respond to the collection of information; search data sources; complete and review the collection of information; and, transmit or otherwise disclose the information. An agency may not conduct or sponsor, and a person is not required to respond to, a collection of information unless it displays a currently valid OMB control number. Send comments on the Agency's need for this information, the accuracy of the provided burden estimates, and any suggested methods for minimizing respondent burden, including the use of automated collection techniques to Director, Collection Strategies Division, U.S. Environmental Protection Agency (2822), 1200 Pennsylvania Ave., NW., Washington, D.C. 20460. Include the OMB control number in any correspondence. Do not send the completed forms to this address.

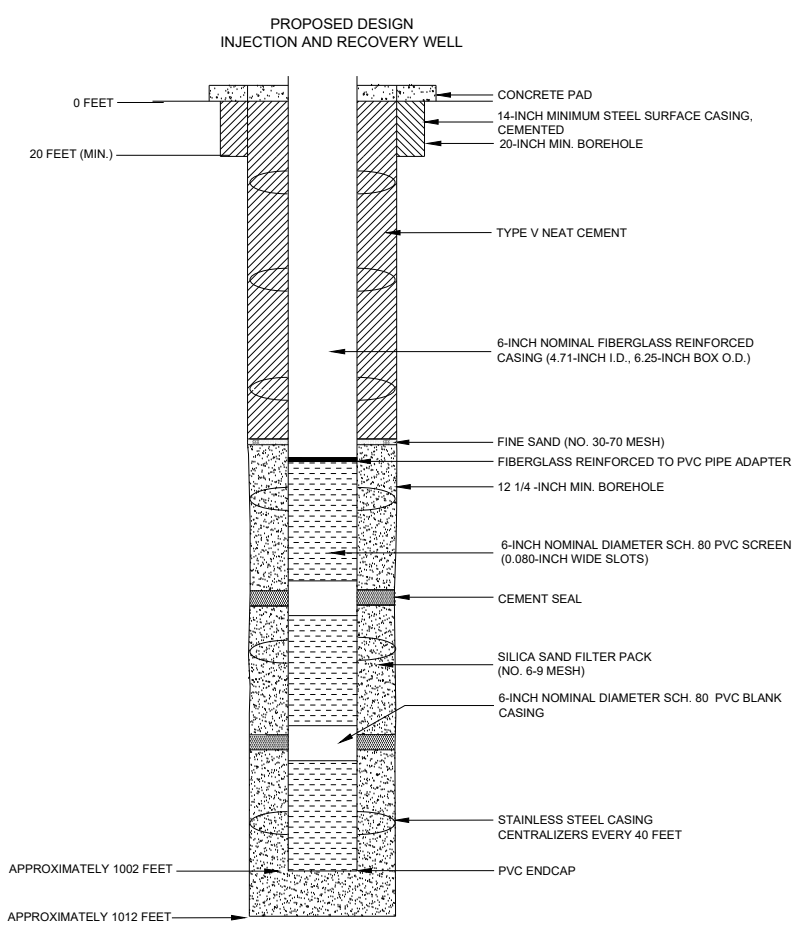

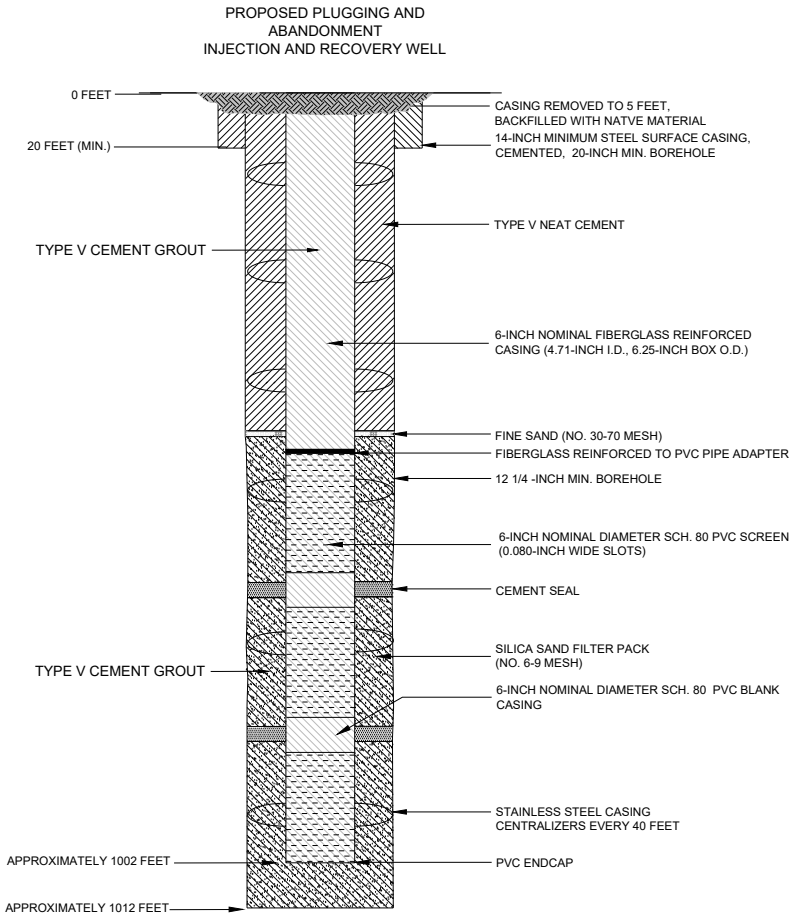

NOTES

1. WELL DESIGN DETAILS ARE BASED ON CORE HOLE AND WELL LOG RECORDS.

HALEY ALDRICH

FLORENCE COPPER, INC.
FLORENCE, ARIZONA

ABANDONMENT SCHEMATIC
RESOURCE BLOCK 48
TYPICAL INJECTION AND RECOVERY WELL

SCALE: AS SHOWN
JULY 2019

FIGURE E-20

TABLE E-20
WELLS WITHIN RESOURCE BLOCK 48
FLORENCE COPPER PROJECT
FLORENCE, ARIZONA

Well Number	Easting	Northing	Resource Block	Depth to Top of Bedrock (ft bgs)	Depth to Top of Injection Zone (ft bgs)	Depth to Bottom of Injection Zone (ft bgs)
219	849816	746556	48	492	532	1002
220	849887	746556	48	492	532	1002
222	849745	746273	48	492	532	1002
223	849816	746273	48	492	532	1002
224	849745	746226	48	492	532	1002
226	849604	746273	48	492	532	1002
227	849674	746343	48	492	532	1002
228	849745	746343	48	492	532	1002
229	849674	746273	48	492	532	1002
230	849604	746202	48	492	532	1002
232	849674	746414	48	492	532	1002
233	849604	746343	48	492	532	1002
234	849533	746273	48	492	532	1002
237	849816	746485	48	492	532	1002
238	849745	746485	48	492	532	1002
239	849816	746414	48	492	532	1002
240	849745	746414	48	492	532	1002
241	849816	746343	48	492	532	1002
242	849887	746343	48	492	532	1002
243	849887	746485	48	492	532	1002
244	849887	746414	48	492	532	1002
267	850099	746343	48	492	532	1002
269	850099	746273	48	492	532	1002
270	849957	746343	48	492	532	1002
271	850028	746414	48	492	532	1002
273	850028	746343	48	492	532	1002
274	849957	746273	48	492	532	1002
276	849957	746414	48	492	532	1002
277	849957	746485	48	492	532	1002
775	849816	745990	48	492	532	1002
776	849887	745990	48	492	532	1002
777	849887	746061	48	492	532	1002
780	849957	746061	48	492	532	1002
781	850028	746131	48	492	532	1002
783	850028	746171	48	492	532	1002
784	849957	746131	48	492	532	1002
933	849745	746061	48	492	532	1002
934	849816	746131	48	492	532	1002
935	849816	746162	48	492	532	1002

TABLE E-20
WELLS WITHIN RESOURCE BLOCK 48
FLORENCE COPPER PROJECT
FLORENCE, ARIZONA

Well Number	Easting	Northing	Resource Block	Depth to Top of Bedrock (ft bgs)	Depth to Top of Injection Zone (ft bgs)	Depth to Bottom of Injection Zone (ft bgs)
936	849745	746131	48	492	532	1002
941	849674	746107	48	492	532	1002
950	849816	746061	48	492	532	1002
951	849887	746181	48	492	532	1002
952	849887	746131	48	492	532	1002
966	849957	746171	48	492	532	1002

Notes:

ft bgs = feet below ground surface

OMB No. 2040-0042 Approval Expires 4/30/2022

United States Environmental Protection Agency

WELL REWORK RECORD, PLUGGING AND ABANDONMENT PLAN, OR PLUGGING AND ABANDONMENT AFFIDAVIT

Name and Address, Phone Number and/or Email of Permittee

Florence Copper Project
1575 W Hunt Hwy,
Florence, AZ 85132

Permit or EPA ID Number	API Number	Full Well Name
R9UIC-AZ3-FY11-1		Block 49 Wells - See Attached Table E-21

State	County
Arizona	Pinal

Locate well in two directions from nearest lines of quarter section and drilling unit

Surface Location

NE 1/4 of SE 1/4 of Section 28 Township 4S Range 9E

_____ ft. from (N/S) _____ Line of quarter section

_____ ft. from (E/W) _____ Line of quarter section.

Latitude 33.050537

Longitude -111.425633

See Attached Table for Individual Well Coordinates.

Well Class	Timing of Action (pick one)	Type of Action (pick one)
☐ Class I ☐ Class II ☑ Class III ☐ Class V	☑ Notice Prior to Work Date Expected to Commence January 2027 ☐ Report After Work Date Work Ended	☐ Well Rework ☑ Plugging and Abandonment ☐ Conversion to a Non-Injection Well

Provide a narrative description of the work planned to be performed, or that was performed. Use additional pages as necessary. See instructions.

This plugging and abandonment applies to wells Class III wells to be constructed in block 49. There are 19 Class III multi-use injection/ recovery wells, 2 dedicated Class III observation, and 5 Class III perimeter wells planned for construction in this block. The injection and recovery wells will be of uniform design, and will be used for injection and recovery on an alternate basis. Some of the injection and recovery wells will be used as perimeter and observation wells prior to well field build-out. The dedicated perimeter observation well will have a design and depth similar to the injection and recovery wells, but will not have a segmented well screen.

The work performed includes plugging and abandonment of the Class III wells in resource block 49. Plugging and abandonment will be accomplished following procedures defined in Attachment E of the application. Plugging and abandonment details are shown on the attached Figures E-21a and E-21b.

Certification

I certify under the penalty of law that I have personally examined and am familiar with the information submitted in this document and all attachments and that, based on my inquiry of those individuals immediately responsible for obtaining the information, I believe that the information is true, accurate, and complete. I am aware that there are significant penalties for submitting false information, including the possibliity of fine and imprisonment. (Ref. 40 CFR § 144.32)

Name and Official Title *(Please type or print)*	Signature	Date Signed
Dan Johnson, VP - General Manager		10/3/2019

INSTRUCTIONS FOR FORM 7520-19

This form replaces forms 7520-12 and 7520-14. Use this form only when work is planned or has occurred that affects the well's construction or operation as an injection well, including work on the casing, tubing or packer (or for shallow Class V wells, the subsurface fluid emplacement network). Use one form per injection well. While reports or other information developed by contractors or service companies may be attached, this form must be signed by a responsible entity as described at 40 CFR 144.32. Note: operators closing Class V wells should use Form 7520-17.

NAME, ADDRESS, PHONE AND/OR EMAIL OF PERMITTEE: Enter the name and street address, city/town, state, and ZIP code of the permittee. Also provide an email address (if available) and/or a phone number.

PERMIT OR EPA ID NUMBER: Enter the well identification number or permit number assigned to the well by the EPA or the permitting authority.

API NUMBER: Enter the number assigned by the local jurisdiction (usually a State Oil and Gas Agency) using the American Petroleum Institute standard numbering system.

FULL WELL NAME: Enter the full name of the well or project.

Enter the **STATE** and **COUNTY** where the well is located. For States that do not have counties, use the name of that State's equivalent jurisdiction at a more local level.

WELL LOCATION: Fill in the complete township, range, and section to the nearest quarter-quarter section. A township is north or south of the baseline, and a range is east or west of the principal meridian (e.g., T12N, R34W). Also include the distance, in feet, from the nearest north or south line and nearest east or west line of the quarter-section. Also, enter the **latitude** and **longitude** of the well in decimal degrees, to five or six places if possible; be sure to include a negative sign for the longitude of a well in the Western Hemisphere and a negative sign for the latitude of a well in the Southern Hemisphere.

Enter the **WELL CLASS,** i.e., the class of injection well as defined in 40 CFR 144.6.

TIMING OF THE ACTION: Check ***Notice prior to work*** if the activity has not yet occurred (i.e., is planned). Check ***Report after work*** if the activity described has already occurred. As appropriate, include the date the activity is expected to start or the date the activity was completed. (Note this may not be available, e.g., for a plugging plan submitted with a permit application.)

TYPE OF ACTION: Check the appropriate box to describe the kind of activity being reported. Check ***Well Rework*** for work that was/will be performed on the well after it has already been in operation as an injection well. Check ***Plugging and Abandonment*** to report on plans for or descriptions of final closure/plugging after use as an injection well. Check ***Conversion to a Non-Injection Well*** if the well is to be converted to something other than an injection well.

Provide a **NARRATIVE DESCRIPTION** of the work planned to be performed, or that was performed. The narrative should include a description of the main procedures planned or that occurred during the work activity. A service company report, daily report, or similar document may be attached if it includes all the requested information and is clear and legible.

For well reworks, include the following information: The reason for the well rework; depths of activity; type of activity; changes to injection well configuration, well casing, or cement behind casing; any plug added to the well and its depth; any newly drilled interval and its depth; method(s) to demonstrate that the well has mechanical integrity (as applicable); and any deviations from the approved rework plan (as applicable).

For a well plugging plan, include the following information: Reason for the well plugging; number of plugs placed, and their depths; materials used as plugs (e.g., cast iron bridge plug, cement, cement retainer); method to set plugs; and wait-on-cement times, if any. Also provide one or more cost estimates from an independent firm in the business of plugging and abandoning wells to plug the well as described in the plan.

For well plugging affidavit, include the following information: Reason for the well plugging; number of plugs placed, and their depths; materials used as plugs (e.g., cast iron bridge plug, cement, cement retainer); method to set plugs; wait-on-cement times, if any; and any deviations from the approved plugging plan (if applicable).

For conversion to a non-injection well, include the following information: Depths of activity; type of activity; changes to injection well configuration, well casing, or cement behind casing; any plug added to the well and its depth; any newly drilled interval and its depth; depths of new perforations; and method(s) to demonstrate that the well has mechanical integrity (as applicable).

For all of the above activities, include a well sketch depicting the work, results of well tests/logging performed, service company tickets, and any other available information demonstrating how the work was/is to be performed. Also, specify whether depths are below ground surface, relative to Kelly bushing, etc.

CERTIFICATION: This form must be signed and dated by either: a responsible corporate officer for a corporation, by a general partner for a partnership, by the proprietor of a sole proprietorship, or by a principal executive or ranking elected official for a public agency.

PAPERWORK REDUCTION ACT NOTICE: The public reporting and recordkeeping burden for this collection of information is estimated to average between 6.0 and 7.9 hours per response, depending on the injection well class. Burden means the total time, effort, or financial resource expended by persons to generate, maintain, retain, or disclose or provide information to or for a Federal Agency. This includes the time needed to review instructions; develop, acquire, install, and utilize technology and systems for the purposes of collecting, validating, and verifying information, processing and maintaining information, and disclosing and providing information; adjust the existing ways to comply with any previously applicable instructions and requirements; train personnel to be able to respond to the collection of information; search data sources; complete and review the collection of information; and, transmit or otherwise disclose the information. An agency may not conduct or sponsor, and a person is not required to respond to, a collection of information unless it displays a currently valid OMB control number. Send comments on the Agency's need for this information, the accuracy of the provided burden estimates, and any suggested methods for minimizing respondent burden, including the use of automated collection techniques to Director, Collection Strategies Division, U.S. Environmental Protection Agency (2822), 1200 Pennsylvania Ave., NW., Washington, D.C. 20460. Include the OMB control number in any correspondence. Do not send the completed forms to this address.

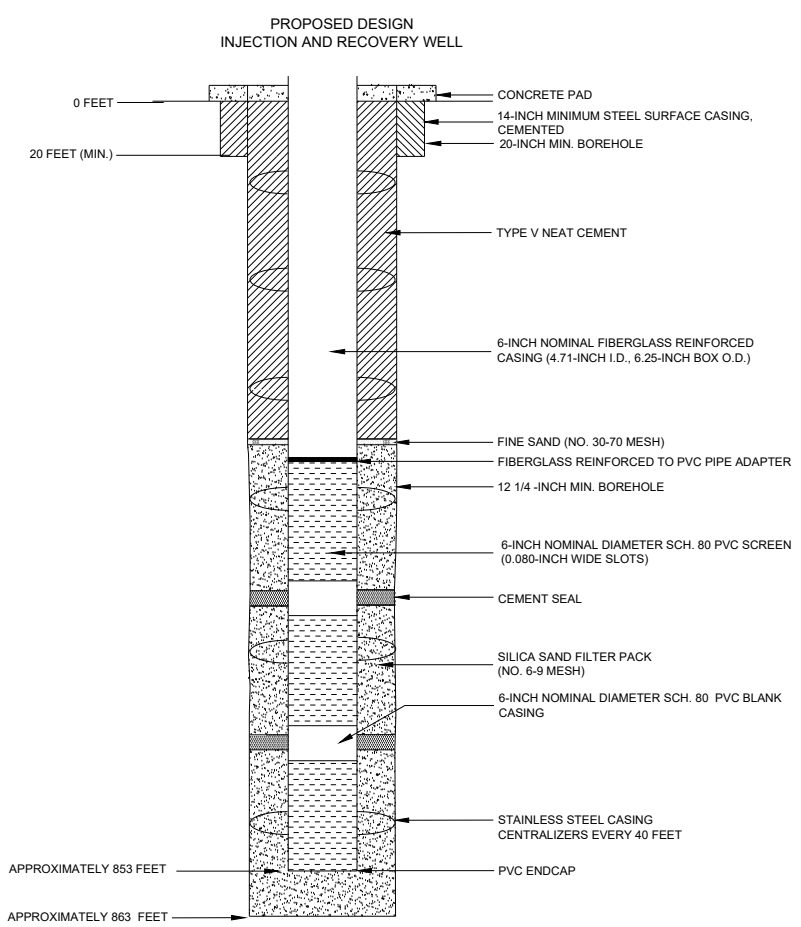

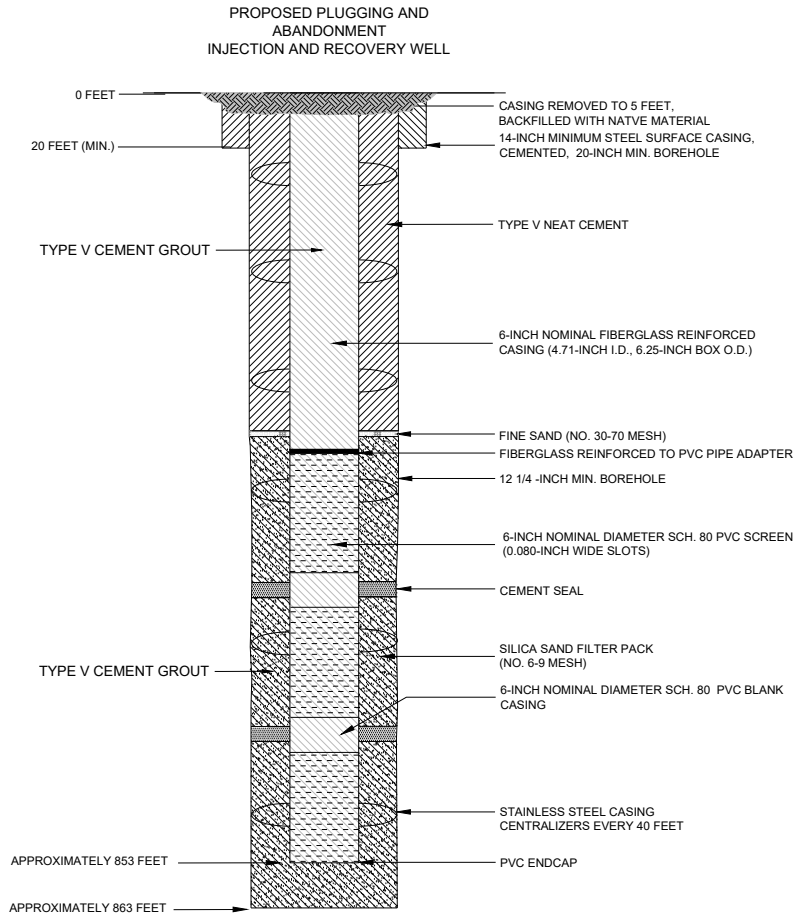

NOTES

1. WELL DESIGN DETAILS ARE BASED ON CORE HOLE AND WELL LOG RECORDS.

HALEY ALDRICH

FLORENCE COPPER, INC.
FLORENCE, ARIZONA

ABANDONMENT SCHEMATIC
RESOURCE BLOCK 49
TYPICAL INJECTION AND RECOVERY WELL

SCALE: AS SHOWN
JULY 2019

FIGURE E-21a

Saved by: MNICHOLLS Printed: 7/25/2019 7:20 PM Sheet: HA-FIG-A-L(2)
\\HALEYALDRICH.COM\SHARE\PHX_COMMON\PROJECTS\FLORENCE COPPER\132473 FLORENCE GROUNDWATER PERMITTING\CAD\132473_000-OBSERVATION_WELL_CONSTRUCTION DIAGRAM.DWG

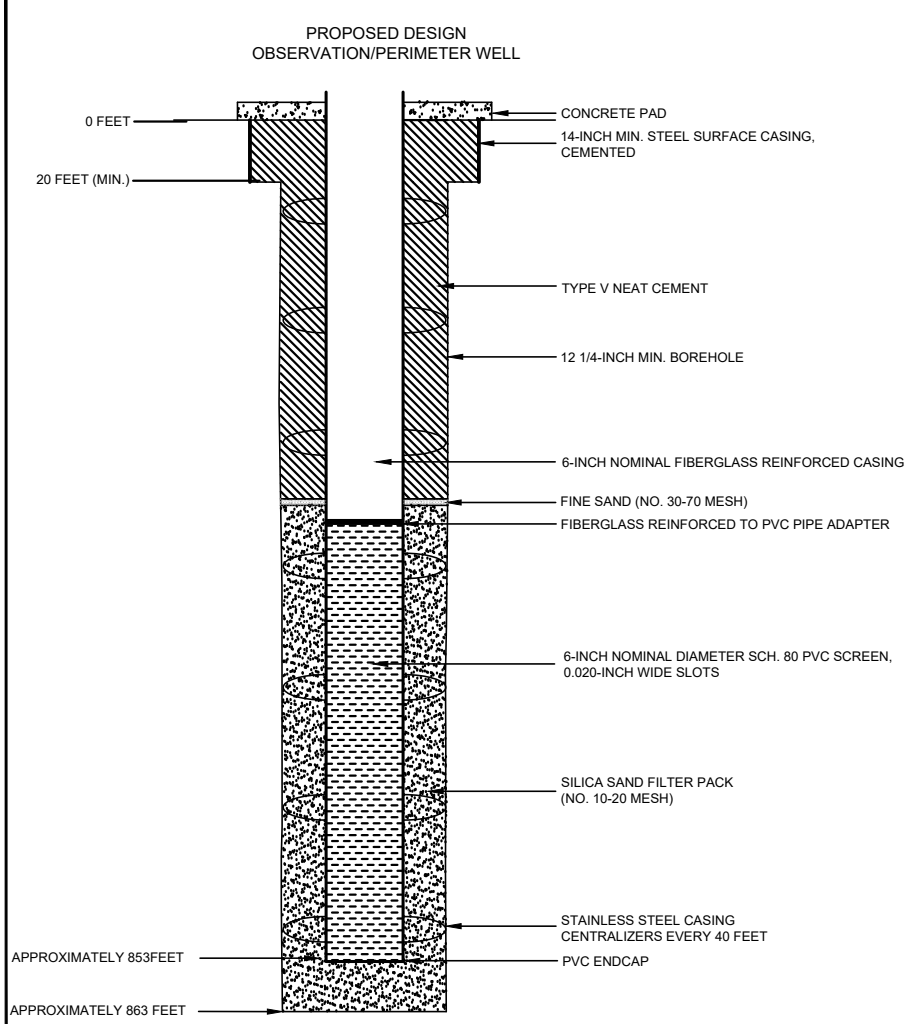

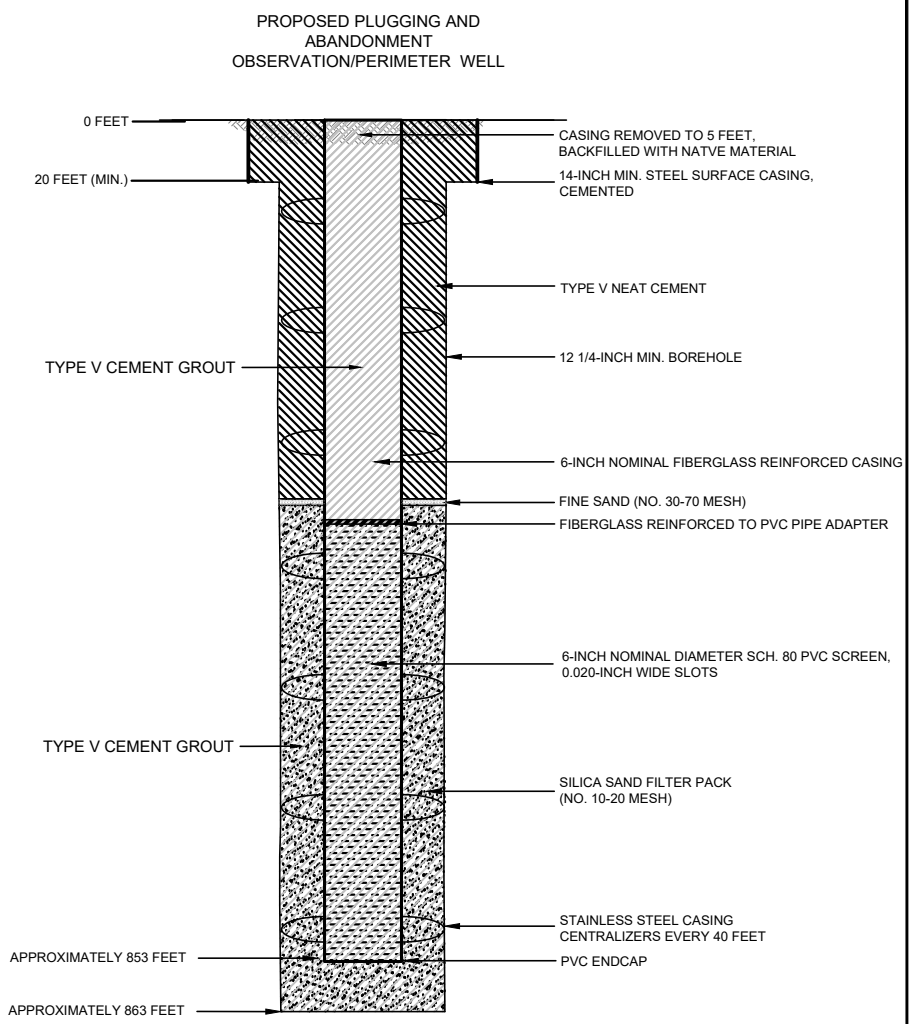

NOTES

1. WELL DESIGN DETAILS ARE BASED ON CORE HOLE AND WELL LOG RECORDS.

HALEY ALDRICH

FLORENCE COPPER, INC.
FLORENCE, ARIZONA

ABANDONMENT SCHEMATIC
RESOURCE BLOCK 49
OBSERVATION/PERIMETER WELL

JULY 2019
SCALE: AS SHOWN

FIGURE E-21b

TABLE E-21
WELLS WITHIN RESOURCE BLOCK 49
FLORENCE COPPER PROJECT
FLORENCE, ARIZONA

Well Number	Easting	Northing	Resource Block	Depth to Top of Bedrock (ft bgs)	Depth to Top of Injection Zone (ft bgs)	Depth to Bottom of Injection Zone (ft bgs)
258	850523	746556	49	440	480	853
266	850240	746273	49	440	480	853
284	850523	746414	49	440	480	853
285	850452	746343	49	440	480	853
286	850381	746273	49	440	480	853
287	850381	746343	49	440	480	853
288	850311	746343	49	440	480	853
289	850452	746485	49	440	480	853
292	850452	746414	49	440	480	853
293	850381	746414	49	440	480	853
321	850452	746273	49	440	480	853
322	850523	746343	49	440	480	853
323	850523	746273	49	440	480	853
801	850523	746061	49	440	480	853
805	850523	745990	49	440	480	853
806	850452	746098	49	440	480	853
807	850523	746106	49	440	480	853
808	850452	746061	49	440	480	853
809	850381	746131	49	440	480	853
O15	850664	746344	49	440	480	853
O16	850664	745990	49	440	480	853
P27	850594	746556	49	440	480	853
P28	850594	746414	49	440	480	853
P29	850594	746273	49	440	480	853
P30	850594	746106	49	440	480	853
P31	850594	745919	49	440	480	853

Notes:

ft bgs = feet below ground surface

OMB No. 2040-0042 Approval Expires 4/30/2022

United States Environmental Protection Agency

WELL REWORK RECORD, PLUGGING AND ABANDONMENT PLAN, OR PLUGGING AND ABANDONMENT AFFIDAVIT

Name and Address, Phone Number and/or Email of Permittee

Florence Copper Project
1575 W Hunt Hwy,
Florence, AZ 85132

Permit or EPA ID Number	API Number	Full Well Name
R9UIC-AZ3-FY11-1		Block 52 Wells - See Attached Table E-22

State	County
Arizona	Pinal

Locate well in two directions from nearest lines of quarter section and drilling unit

Surface Location

NW 1/4 of SW 1/4 of Section 28 Township 4S Range 9E

_____ ft. from (N/S) _____ Line of quarter section

_____ ft. from (E/W) _____ Line of quarter section.

Latitude 33.049763

Longitude -111.435705

See Attached Table for Individual Well Coordinates.

Well Class	Timing of Action (pick one)	Type of Action (pick one)
☐ Class I ☐ Class II ☑ Class III ☐ Class V	☑ Notice Prior to Work Date Expected to Commence January 2027 ☐ Report After Work Date Work Ended	☐ Well Rework ☑ Plugging and Abandonment ☐ Conversion to a Non-Injection Well

Provide a narrative description of the work planned to be performed, or that was performed. Use additional pages as necessary. See instructions.

This plugging and abandonment applies to wells Class III wells to be constructed in block 52. There is 1 Class III multi-use injection/ recovery well, planned for construction in this block. The injection and recovery well will be used for injection and recovery on an alternate basis. Some of the injection and recovery wells will be used as perimeter and observation wells prior to well field build-out.

The work performed includes plugging and abandonment of the Class III wells in resource block 52. Plugging and abandonment will be accomplished following procedures defined in Attachment E of the application. Plugging and abandonment details are shown on the attached Figure E-22.

Certification

I certify under the penalty of law that I have personally examined and am familiar with the information submitted in this document and all attachments and that, based on my inquiry of those individuals immediately responsible for obtaining the information, I believe that the information is true, accurate, and complete. I am aware that there are significant penalties for submitting false information, including the possibliity of fine and imprisonment. (Ref. 40 CFR § 144.32)

Name and Official Title *(Please type or print)*	Signature	Date Signed
Dan Johnson, VP - General Manager		10/3/2019

INSTRUCTIONS FOR FORM 7520-19

This form replaces forms 7520-12 and 7520-14. Use this form only when work is planned or has occurred that affects the well's construction or operation as an injection well, including work on the casing, tubing or packer (or for shallow Class V wells, the subsurface fluid emplacement network). Use one form per injection well. While reports or other information developed by contractors or service companies may be attached, this form must be signed by a responsible entity as described at 40 CFR 144.32. Note: operators closing Class V wells should use Form 7520-17.

NAME, ADDRESS, PHONE AND/OR EMAIL OF PERMITTEE: Enter the name and street address, city/town, state, and ZIP code of the permittee. Also provide an email address (if available) and/or a phone number.

PERMIT OR EPA ID NUMBER: Enter the well identification number or permit number assigned to the well by the EPA or the permitting authority.

API NUMBER: Enter the number assigned by the local jurisdiction (usually a State Oil and Gas Agency) using the American Petroleum Institute standard numbering system.

FULL WELL NAME: Enter the full name of the well or project.

Enter the **STATE** and **COUNTY** where the well is located. For States that do not have counties, use the name of that State's equivalent jurisdiction at a more local level.

WELL LOCATION: Fill in the complete township, range, and section to the nearest quarter-quarter section. A township is north or south of the baseline, and a range is east or west of the principal meridian (e.g., T12N, R34W). Also include the distance, in feet, from the nearest north or south line and nearest east or west line of the quarter-section. Also, enter the **latitude** and **longitude** of the well in decimal degrees, to five or six places if possible; be sure to include a negative sign for the longitude of a well in the Western Hemisphere and a negative sign for the latitude of a well in the Southern Hemisphere.

Enter the **WELL CLASS,** i.e., the class of injection well as defined in 40 CFR 144.6.

TIMING OF THE ACTION: Check ***Notice prior to work*** if the activity has not yet occurred (i.e., is planned). Check ***Report after work*** if the activity described has already occurred. As appropriate, include the date the activity is expected to start or the date the activity was completed. (Note this may not be available, e.g., for a plugging plan submitted with a permit application.)

TYPE OF ACTION: Check the appropriate box to describe the kind of activity being reported. Check ***Well Rework*** for work that was/will be performed on the well after it has already been in operation as an injection well. Check ***Plugging and Abandonment*** to report on plans for or descriptions of final closure/plugging after use as an injection well. Check ***Conversion to a Non-Injection Well*** if the well is to be converted to something other than an injection well.

Provide a **NARRATIVE DESCRIPTION** of the work planned to be performed, or that was performed. The narrative should include a description of the main procedures planned or that occurred during the work activity. A service company report, daily report, or similar document may be attached if it includes all the requested information and is clear and legible.

For well reworks, include the following information: The reason for the well rework; depths of activity; type of activity; changes to injection well configuration, well casing, or cement behind casing; any plug added to the well and its depth; any newly drilled interval and its depth; method(s) to demonstrate that the well has mechanical integrity (as applicable); and any deviations from the approved rework plan (as applicable).

For a well plugging plan, include the following information: Reason for the well plugging; number of plugs placed, and their depths; materials used as plugs (e.g., cast iron bridge plug, cement, cement retainer); method to set plugs; and wait-on-cement times, if any. Also provide one or more cost estimates from an independent firm in the business of plugging and abandoning wells to plug the well as described in the plan.

For well plugging affidavit, include the following information: Reason for the well plugging; number of plugs placed, and their depths; materials used as plugs (e.g., cast iron bridge plug, cement, cement retainer); method to set plugs; wait-on-cement times, if any; and any deviations from the approved plugging plan (if applicable).

For conversion to a non-injection well, include the following information: Depths of activity; type of activity; changes to injection well configuration, well casing, or cement behind casing; any plug added to the well and its depth; any newly drilled interval and its depth; depths of new perforations; and method(s) to demonstrate that the well has mechanical integrity (as applicable).

For all of the above activities, include a well sketch depicting the work, results of well tests/logging performed, service company tickets, and any other available information demonstrating how the work was/is to be performed. Also, specify whether depths are below ground surface, relative to Kelly bushing, etc.

CERTIFICATION: This form must be signed and dated by either: a responsible corporate officer for a corporation, by a general partner for a partnership, by the proprietor of a sole proprietorship, or by a principal executive or ranking elected official for a public agency.

PAPERWORK REDUCTION ACT NOTICE: The public reporting and recordkeeping burden for this collection of information is estimated to average between 6.0 and 7.9 hours per response, depending on the injection well class. Burden means the total time, effort, or financial resource expended by persons to generate, maintain, retain, or disclose or provide information to or for a Federal Agency. This includes the time needed to review instructions; develop, acquire, install, and utilize technology and systems for the purposes of collecting, validating, and verifying information, processing and maintaining information, and disclosing and providing information; adjust the existing ways to comply with any previously applicable instructions and requirements; train personnel to be able to respond to the collection of information; search data sources; complete and review the collection of information; and, transmit or otherwise disclose the information. An agency may not conduct or sponsor, and a person is not required to respond to, a collection of information unless it displays a currently valid OMB control number. Send comments on the Agency's need for this information, the accuracy of the provided burden estimates, and any suggested methods for minimizing respondent burden, including the use of automated collection techniques to Director, Collection Strategies Division, U.S. Environmental Protection Agency (2822), 1200 Pennsylvania Ave., NW., Washington, D.C. 20460. Include the OMB control number in any correspondence. Do not send the completed forms to this address.

PROPOSED DESIGN
INJECTION AND RECOVERY WELL

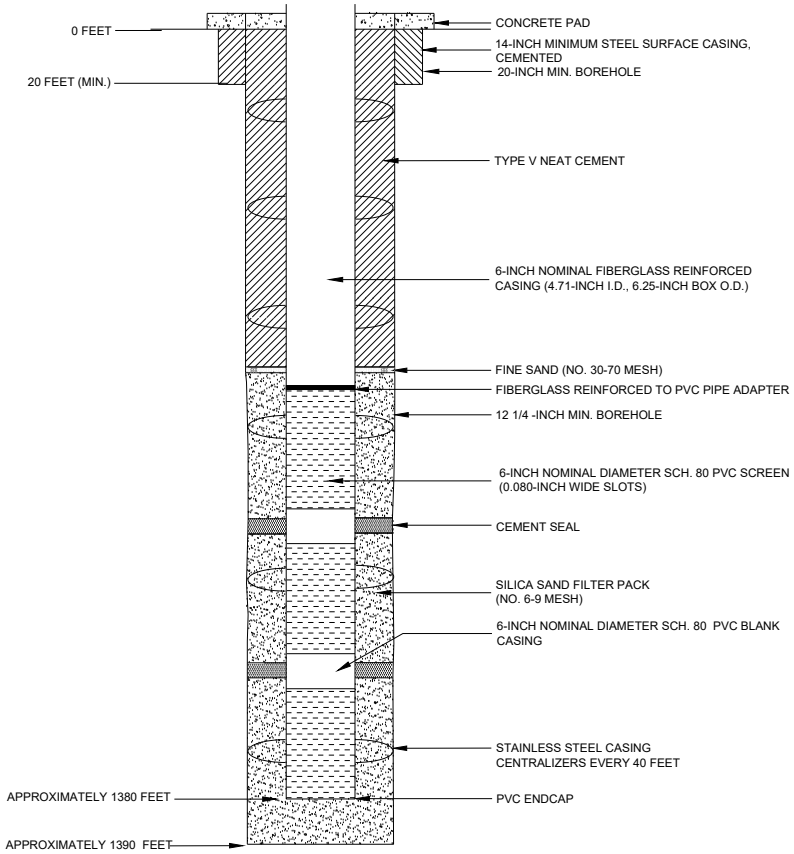

PROPOSED PLUGGING AND
ABANDONMENT
INJECTION AND RECOVERY WELL

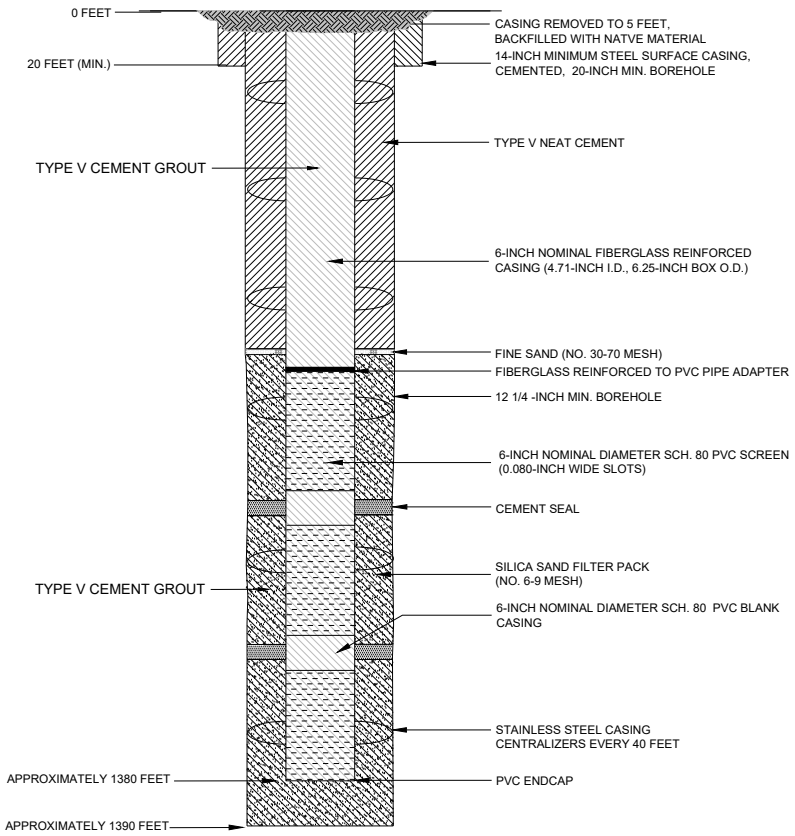

NOTES

1. WELL DESIGN DETAILS ARE BASED ON CORE HOLE AND WELL LOG RECORDS.

HALEY ALDRICH

FLORENCE COPPER, INC.
FLORENCE, ARIZONA

ABANDONMENT SCHEMATIC
RESOURCE BLOCK 52
TYPICAL INJECTION AND
RECOVERY WELL

SCALE: AS SHOWN
JULY 2019

FIGURE E-22

TABLE E-22
WELLS WITHIN RESOURCE BLOCK 52
FLORENCE COPPER PROJECT
FLORENCE, ARIZONA

Well Number	Easting	Northing	Resource Block	Depth to Top of Bedrock (ft bgs)	Depth to Top of Injection Zone (ft bgs)	Depth to Bottom of Injection Zone (ft bgs)
907	846988	745919	52	705	745	1380

Notes:

ft bgs = feet below ground surface

OMB No. 2040-0042 Approval Expires 4/30/2022

United States Environmental Protection Agency

WELL REWORK RECORD, PLUGGING AND ABANDONMENT PLAN, OR PLUGGING AND ABANDONMENT AFFIDAVIT

Name and Address, Phone Number and/or Email of Permittee

Florence Copper Project
1575 W Hunt Hwy,
Florence, AZ 85132

Permit or EPA ID Number	API Number	Full Well Name
R9UIC-AZ3-FY11-1		Block 53 Wells - See Attached Table E-23

State	County
Arizona	Pinal

Locate well in two directions from nearest lines of quarter section and drilling unit

Surface Location

NW 1/4 of SW 1/4 of Section 28 Township 4S Range 9E

_____ ft. from (N/S) _____ Line of quarter section

_____ ft. from (E/W) _____ Line of quarter section.

Latitude 33.049763

Longitude -111.435705

See Attached Table for Individual Well Coordinates.

Well Class	Timing of Action (pick one)	Type of Action (pick one)
☐ Class I ☐ Class II ☑ Class III ☐ Class V	☑ Notice Prior to Work Date Expected to Commence January 2027 ☐ Report After Work Date Work Ended	☐ Well Rework ☑ Plugging and Abandonment ☐ Conversion to a Non-Injection Well

Provide a narrative description of the work planned to be performed, or that was performed. Use additional pages as necessary. See instructions.

This plugging and abandonment applies to wells Class III wells to be constructed in block 53. There are 49 Class III multi-use injection/ recovery and one Class III perimeter well planned for construction in this block. The injection and recovery wells will be of uniform design, and will be used for injection and recovery on an alternate basis. Some of the injection and recovery wells will be used as perimeter and observation wells prior to well field build-out. The dedicated perimeter well will have a design and depth similar to the injection and recovery wells, but will not have a segmented well screen.

The work performed includes plugging and abandonment of the Class III wells in resource block 53. Plugging and abandonment will be accomplished following procedures defined in Attachment E of the application. Plugging and abandonment details are shown on the attached Figure E-23.

Certification

I certify under the penalty of law that I have personally examined and am familiar with the information submitted in this document and all attachments and that, based on my inquiry of those individuals immediately responsible for obtaining the information, I believe that the information is true, accurate, and complete. I am aware that there are significant penalties for submitting false information, including the possibliity of fine and imprisonment. (Ref. 40 CFR § 144.32)

Name and Official Title *(Please type or print)*	Signature	Date Signed
Dan Johnson, VP - General Manager		10/3/2019

INSTRUCTIONS FOR FORM 7520-19

This form replaces forms 7520-12 and 7520-14. Use this form only when work is planned or has occurred that affects the well's construction or operation as an injection well, including work on the casing, tubing or packer (or for shallow Class V wells, the subsurface fluid emplacement network). Use one form per injection well. While reports or other information developed by contractors or service companies may be attached, this form must be signed by a responsible entity as described at 40 CFR 144.32. Note: operators closing Class V wells should use Form 7520-17.

NAME, ADDRESS, PHONE AND/OR EMAIL OF PERMITTEE: Enter the name and street address, city/town, state, and ZIP code of the permittee. Also provide an email address (if available) and/or a phone number.

PERMIT OR EPA ID NUMBER: Enter the well identification number or permit number assigned to the well by the EPA or the permitting authority.

API NUMBER: Enter the number assigned by the local jurisdiction (usually a State Oil and Gas Agency) using the American Petroleum Institute standard numbering system.

FULL WELL NAME: Enter the full name of the well or project.

Enter the **STATE** and **COUNTY** where the well is located. For States that do not have counties, use the name of that State's equivalent jurisdiction at a more local level.

WELL LOCATION: Fill in the complete township, range, and section to the nearest quarter-quarter section. A township is north or south of the baseline, and a range is east or west of the principal meridian (e.g., T12N, R34W). Also include the distance, in feet, from the nearest north or south line and nearest east or west line of the quarter-section. Also, enter the **latitude** and **longitude** of the well in decimal degrees, to five or six places if possible; be sure to include a negative sign for the longitude of a well in the Western Hemisphere and a negative sign for the latitude of a well in the Southern Hemisphere.

Enter the **WELL CLASS,** i.e., the class of injection well as defined in 40 CFR 144.6.

TIMING OF THE ACTION: Check ***Notice prior to work*** if the activity has not yet occurred (i.e., is planned). Check ***Report after work*** if the activity described has already occurred. As appropriate, include the date the activity is expected to start or the date the activity was completed. (Note this may not be available, e.g., for a plugging plan submitted with a permit application.)

TYPE OF ACTION: Check the appropriate box to describe the kind of activity being reported. Check ***Well Rework*** for work that was/will be performed on the well after it has already been in operation as an injection well. Check ***Plugging and Abandonment*** to report on plans for or descriptions of final closure/plugging after use as an injection well. Check ***Conversion to a Non-Injection Well*** if the well is to be converted to something other than an injection well.

Provide a **NARRATIVE DESCRIPTION** of the work planned to be performed, or that was performed. The narrative should include a description of the main procedures planned or that occurred during the work activity. A service company report, daily report, or similar document may be attached if it includes all the requested information and is clear and legible.

For well reworks, include the following information: The reason for the well rework; depths of activity; type of activity; changes to injection well configuration, well casing, or cement behind casing; any plug added to the well and its depth; any newly drilled interval and its depth; method(s) to demonstrate that the well has mechanical integrity (as applicable); and any deviations from the approved rework plan (as applicable).

For a well plugging plan, include the following information: Reason for the well plugging; number of plugs placed, and their depths; materials used as plugs (e.g., cast iron bridge plug, cement, cement retainer); method to set plugs; and wait-on-cement times, if any. Also provide one or more cost estimates from an independent firm in the business of plugging and abandoning wells to plug the well as described in the plan.

For well plugging affidavit, include the following information: Reason for the well plugging; number of plugs placed, and their depths; materials used as plugs (e.g., cast iron bridge plug, cement, cement retainer); method to set plugs; wait-on-cement times, if any; and any deviations from the approved plugging plan (if applicable).

For conversion to a non-injection well, include the following information: Depths of activity; type of activity; changes to injection well configuration, well casing, or cement behind casing; any plug added to the well and its depth; any newly drilled interval and its depth; depths of new perforations; and method(s) to demonstrate that the well has mechanical integrity (as applicable).

For all of the above activities, include a well sketch depicting the work, results of well tests/logging performed, service company tickets, and any other available information demonstrating how the work was/is to be performed. Also, specify whether depths are below ground surface, relative to Kelly bushing, etc.

CERTIFICATION: This form must be signed and dated by either: a responsible corporate officer for a corporation, by a general partner for a partnership, by the proprietor of a sole proprietorship, or by a principal executive or ranking elected official for a public agency.

PAPERWORK REDUCTION ACT NOTICE: The public reporting and recordkeeping burden for this collection of information is estimated to average between 6.0 and 7.9 hours per response, depending on the injection well class. Burden means the total time, effort, or financial resource expended by persons to generate, maintain, retain, or disclose or provide information to or for a Federal Agency. This includes the time needed to review instructions; develop, acquire, install, and utilize technology and systems for the purposes of collecting, validating, and verifying information, processing and maintaining information, and disclosing and providing information; adjust the existing ways to comply with any previously applicable instructions and requirements; train personnel to be able to respond to the collection of information; search data sources; complete and review the collection of information; and, transmit or otherwise disclose the information. An agency may not conduct or sponsor, and a person is not required to respond to, a collection of information unless it displays a currently valid OMB control number. Send comments on the Agency's need for this information, the accuracy of the provided burden estimates, and any suggested methods for minimizing respondent burden, including the use of automated collection techniques to Director, Collection Strategies Division, U.S. Environmental Protection Agency (2822), 1200 Pennsylvania Ave., NW., Washington, D.C. 20460. Include the OMB control number in any correspondence. Do not send the completed forms to this address.

PROPOSED DESIGN
INJECTION AND RECOVERY WELL

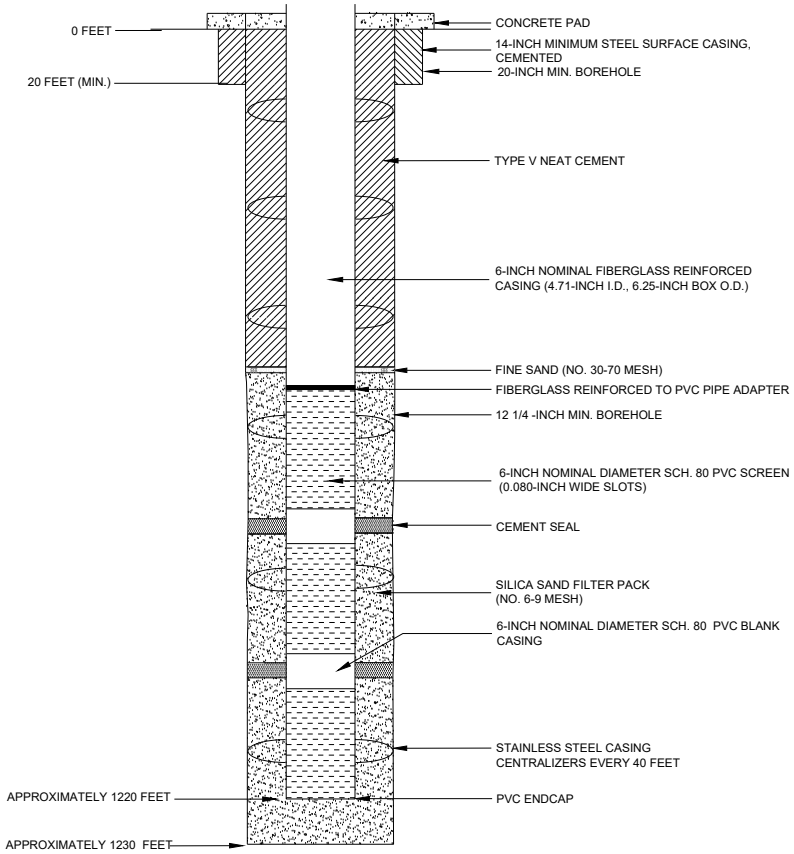

PROPOSED PLUGGING AND
ABANDONMENT
INJECTION AND RECOVERY WELL

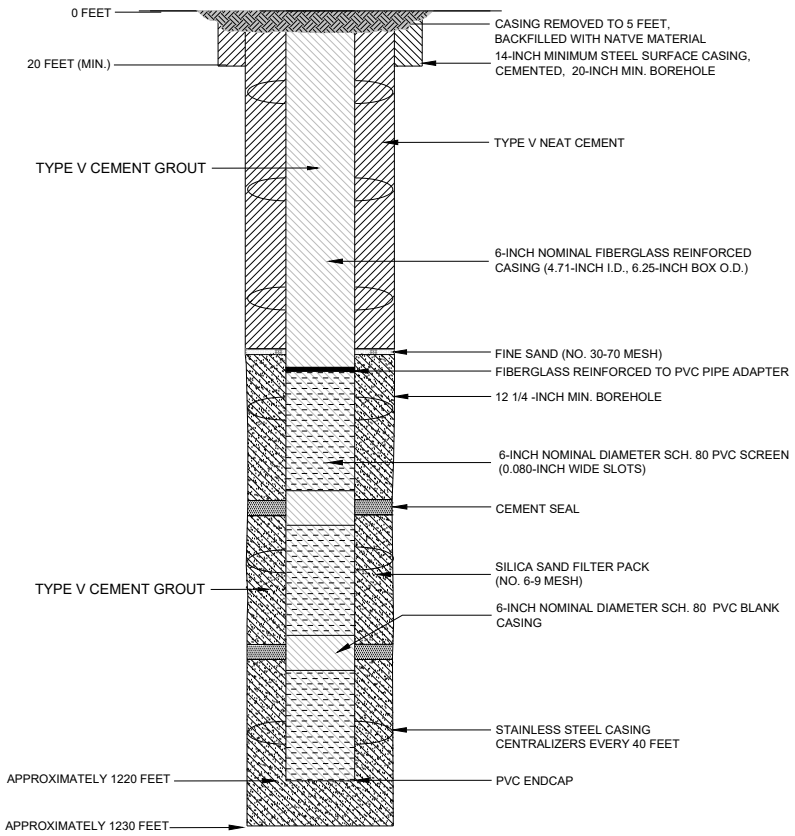

NOTES

1. WELL DESIGN DETAILS ARE BASED ON CORE HOLE AND WELL LOG RECORDS.

HALEY ALDRICH

FLORENCE COPPER, INC.
FLORENCE, ARIZONA

ABANDONMENT SCHEMATIC
RESOURCE BLOCK 53
TYPICAL INJECTION AND
RECOVERY WELL

SCALE: AS SHOWN
JULY 2019

FIGURE E-23

TABLE E-23
WELLS WITHIN RESOURCE BLOCK 53
FLORENCE COPPER PROJECT
FLORENCE, ARIZONA

Well Number	Easting	Northing	Resource Block	Depth to Top of Bedrock (ft bgs)	Depth to Top of Injection Zone (ft bgs)	Depth to Bottom of Injection Zone (ft bgs)
419	847624	745990	53	485	525	1220
430	847695	745919	53	485	525	1220
431	847553	745990	53	485	525	1220
432	847624	745919	53	485	525	1220
482	847483	746131	53	485	525	1220
483	847412	746202	53	485	525	1220
486	847553	746061	53	485	525	1220
487	847412	745990	53	485	525	1220
488	847482	746061	53	485	525	1220
489	847412	746061	53	485	525	1220
490	847341	745990	53	485	525	1220
491	847200	745990	53	485	525	1220
492	847270	746060	53	485	525	1220
493	847341	746131	53	485	525	1220
494	847412	746131	53	485	525	1220
495	847341	746060	53	485	525	1220
496	847270	745990	53	485	525	1220
497	847341	746202	53	485	525	1220
498	847270	746131	53	485	525	1220
499	847200	746060	53	485	525	1220
500	847129	745990	53	485	525	1220
501	847482	745990	53	485	525	1220
502	847412	745848	53	485	525	1220
503	847341	745919	53	485	525	1220
504	847270	745848	53	485	525	1220
505	847270	745919	53	485	525	1220
506	847200	745919	53	485	525	1220
508	847129	745919	53	485	525	1220
509	847058	745919	53	485	525	1220
510	847553	745919	53	485	525	1220
511	847482	745919	53	485	525	1220
512	847412	745919	53	485	525	1220
2095	847481	745776	53	485	525	1220
2096	847552	745847	53	485	525	1220
2097	847552	745776	53	485	525	1220
2098	847623	745847	53	485	525	1220
2204	847411	745635	53	485	525	1220
2205	847481	745705	53	485	525	1220
2206	847411	745705	53	485	525	1220

TABLE E-23
WELLS WITHIN RESOURCE BLOCK 53
FLORENCE COPPER PROJECT
FLORENCE, ARIZONA

Well Number	Easting	Northing	Resource Block	Depth to Top of Bedrock (ft bgs)	Depth to Top of Injection Zone (ft bgs)	Depth to Bottom of Injection Zone (ft bgs)
2267	847340	745705	53	485	525	1220
2268	847366	745660	53	485	525	1220
2269	847340	745776	53	485	525	1220
2270	847269	745721	53	485	525	1220
2271	847199	745776	53	485	525	1220
2354	847412	745776	53	485	525	1220
2355	847269	745776	53	485	525	1220
2356	847340	745847	53	485	525	1220
2358	847199	745847	53	485	525	1220
2361	847481	745847	53	485	525	1220

Notes:

ft bgs = feet below ground surface

OMB No. 2040-0042 Approval Expires 4/30/2022

United States Environmental Protection Agency

WELL REWORK RECORD, PLUGGING AND ABANDONMENT PLAN, OR PLUGGING AND ABANDONMENT AFFIDAVIT

Name and Address, Phone Number and/or Email of Permittee

Florence Copper Project
1575 W Hunt Hwy,
Florence, AZ 85132

Permit or EPA ID Number	API Number	Full Well Name
R9UIC-AZ3-FY11-1		Block 54 Wells - See Attached Table E-24

State	County
Arizona	Pinal

Locate well in two directions from nearest lines of quarter section and drilling unit

Surface Location

NE 1/4 of SW 1/4 of Section 28 Township 4S Range 9E

_____ ft. from (N/S) _____ Line of quarter section

_____ ft. from (E/W) _____ Line of quarter section.

Latitude 33.049920

Longitude -111.433474

See Attached Table for Individual Well Coordinates.

Well Class	Timing of Action (pick one)	Type of Action (pick one)
☐ Class I ☐ Class II ☑ Class III ☐ Class V	☑ Notice Prior to Work Date Expected to Commence January 2027 ☐ Report After Work Date Work Ended	☐ Well Rework ☑ Plugging and Abandonment ☐ Conversion to a Non-Injection Well

Provide a narrative description of the work planned to be performed, or that was performed. Use additional pages as necessary. See instructions.

This plugging and abandonment applies to wells Class III wells to be constructed in block 54. There are 50 Class III multi-use injection/ recovery wells, planned for construction in this block. The injection and recovery wells will be of uniform design, and will be used for injection and recovery on an alternate basis. Some of the injection and recovery wells will be used as perimeter and observation wells prior to well field build-out.

The work performed includes plugging and abandonment of the Class III wells in resource block 54. Plugging and abandonment will be accomplished following procedures defined in Attachment E of the application. Plugging and abandonment details are shown on the attached Figure E-24.

Certification

I certify under the penalty of law that I have personally examined and am familiar with the information submitted in this document and all attachments and that, based on my inquiry of those individuals immediately responsible for obtaining the information, I believe that the information is true, accurate, and complete. I am aware that there are significant penalties for submitting false information, including the possibliity of fine and imprisonment. (Ref. 40 CFR § 144.32)

Name and Official Title *(Please type or print)*	Signature	Date Signed
Dan Johnson, VP - General Manager		10/3/2019

INSTRUCTIONS FOR FORM 7520-19

This form replaces forms 7520-12 and 7520-14. Use this form only when work is planned or has occurred that affects the well's construction or operation as an injection well, including work on the casing, tubing or packer (or for shallow Class V wells, the subsurface fluid emplacement network). Use one form per injection well. While reports or other information developed by contractors or service companies may be attached, this form must be signed by a responsible entity as described at 40 CFR 144.32. Note: operators closing Class V wells should use Form 7520-17.

NAME, ADDRESS, PHONE AND/OR EMAIL OF PERMITTEE: Enter the name and street address, city/town, state, and ZIP code of the permittee. Also provide an email address (if available) and/or a phone number.

PERMIT OR EPA ID NUMBER: Enter the well identification number or permit number assigned to the well by the EPA or the permitting authority.

API NUMBER: Enter the number assigned by the local jurisdiction (usually a State Oil and Gas Agency) using the American Petroleum Institute standard numbering system.

FULL WELL NAME: Enter the full name of the well or project.

Enter the **STATE** and **COUNTY** where the well is located. For States that do not have counties, use the name of that State's equivalent jurisdiction at a more local level.

WELL LOCATION: Fill in the complete township, range, and section to the nearest quarter-quarter section. A township is north or south of the baseline, and a range is east or west of the principal meridian (e.g., T12N, R34W). Also include the distance, in feet, from the nearest north or south line and nearest east or west line of the quarter-section. Also, enter the **latitude** and **longitude** of the well in decimal degrees, to five or six places if possible; be sure to include a negative sign for the longitude of a well in the Western Hemisphere and a negative sign for the latitude of a well in the Southern Hemisphere.

Enter the **WELL CLASS,** i.e., the class of injection well as defined in 40 CFR 144.6.

TIMING OF THE ACTION: Check ***Notice prior to work*** if the activity has not yet occurred (i.e., is planned). Check ***Report after work*** if the activity described has already occurred. As appropriate, include the date the activity is expected to start or the date the activity was completed. (Note this may not be available, e.g., for a plugging plan submitted with a permit application.)

TYPE OF ACTION: Check the appropriate box to describe the kind of activity being reported. Check ***Well Rework*** for work that was/will be performed on the well after it has already been in operation as an injection well. Check ***Plugging and Abandonment*** to report on plans for or descriptions of final closure/plugging after use as an injection well. Check ***Conversion to a Non-Injection Well*** if the well is to be converted to something other than an injection well.

Provide a **NARRATIVE DESCRIPTION** of the work planned to be performed, or that was performed. The narrative should include a description of the main procedures planned or that occurred during the work activity. A service company report, daily report, or similar document may be attached if it includes all the requested information and is clear and legible.

For well reworks, include the following information: The reason for the well rework; depths of activity; type of activity; changes to injection well configuration, well casing, or cement behind casing; any plug added to the well and its depth; any newly drilled interval and its depth; method(s) to demonstrate that the well has mechanical integrity (as applicable); and any deviations from the approved rework plan (as applicable).

For a well plugging plan, include the following information: Reason for the well plugging; number of plugs placed, and their depths; materials used as plugs (e.g., cast iron bridge plug, cement, cement retainer); method to set plugs; and wait-on-cement times, if any. Also provide one or more cost estimates from an independent firm in the business of plugging and abandoning wells to plug the well as described in the plan.

For well plugging affidavit, include the following information: Reason for the well plugging; number of plugs placed, and their depths; materials used as plugs (e.g., cast iron bridge plug, cement, cement retainer); method to set plugs; wait-on-cement times, if any; and any deviations from the approved plugging plan (if applicable).

For conversion to a non-injection well, include the following information: Depths of activity; type of activity; changes to injection well configuration, well casing, or cement behind casing; any plug added to the well and its depth; any newly drilled interval and its depth; depths of new perforations; and method(s) to demonstrate that the well has mechanical integrity (as applicable).

For all of the above activities, include a well sketch depicting the work, results of well tests/logging performed, service company tickets, and any other available information demonstrating how the work was/is to be performed. Also, specify whether depths are below ground surface, relative to Kelly bushing, etc.

CERTIFICATION: This form must be signed and dated by either: a responsible corporate officer for a corporation, by a general partner for a partnership, by the proprietor of a sole proprietorship, or by a principal executive or ranking elected official for a public agency.

PAPERWORK REDUCTION ACT NOTICE: The public reporting and recordkeeping burden for this collection of information is estimated to average between 6.0 and 7.9 hours per response, depending on the injection well class. Burden means the total time, effort, or financial resource expended by persons to generate, maintain, retain, or disclose or provide information to or for a Federal Agency. This includes the time needed to review instructions; develop, acquire, install, and utilize technology and systems for the purposes of collecting, validating, and verifying information, processing and maintaining information, and disclosing and providing information; adjust the existing ways to comply with any previously applicable instructions and requirements; train personnel to be able to respond to the collection of information; search data sources; complete and review the collection of information; and, transmit or otherwise disclose the information. An agency may not conduct or sponsor, and a person is not required to respond to, a collection of information unless it displays a currently valid OMB control number. Send comments on the Agency's need for this information, the accuracy of the provided burden estimates, and any suggested methods for minimizing respondent burden, including the use of automated collection techniques to Director, Collection Strategies Division, U.S. Environmental Protection Agency (2822), 1200 Pennsylvania Ave., NW., Washington, D.C. 20460. Include the OMB control number in any correspondence. Do not send the completed forms to this address.

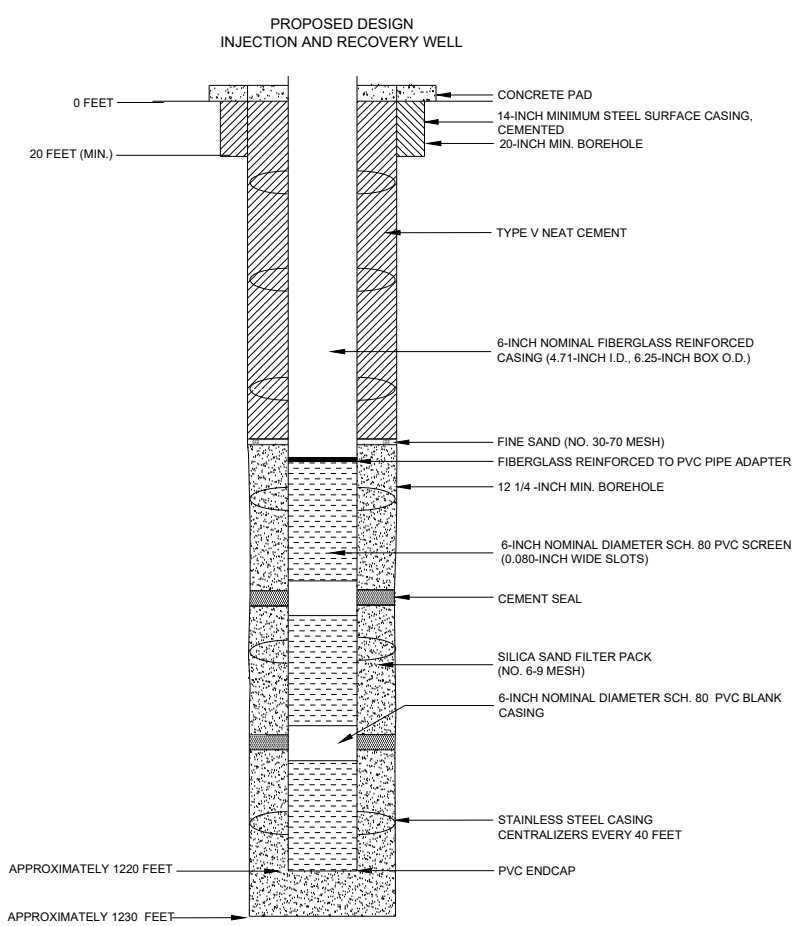

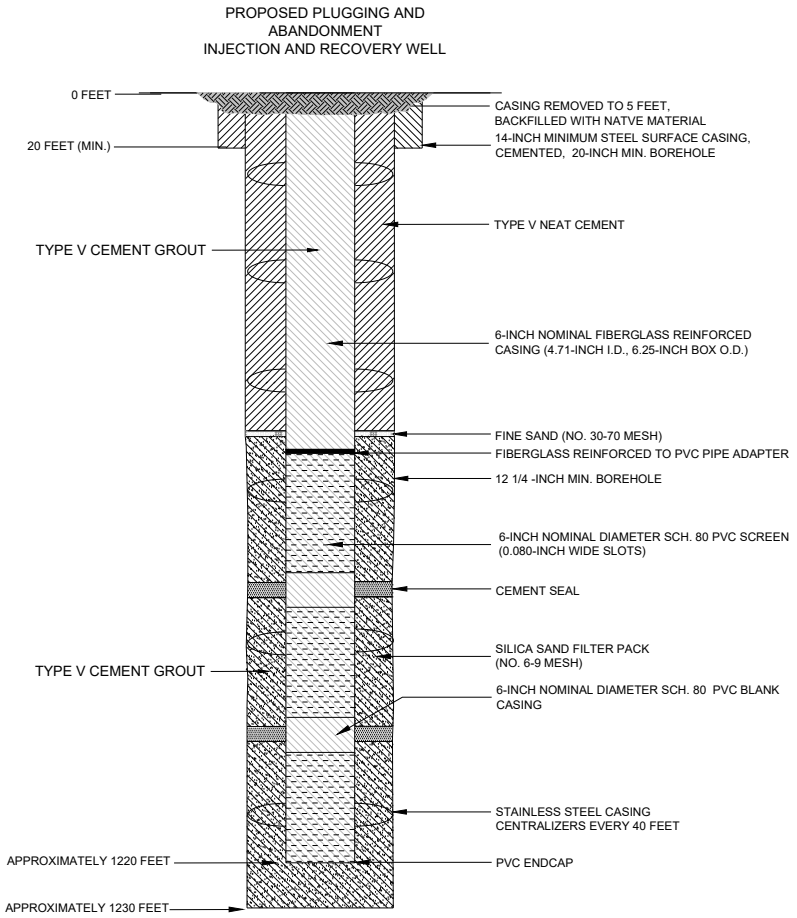

NOTES

1. WELL DESIGN DETAILS ARE BASED ON CORE HOLE AND WELL LOG RECORDS.

HALEY ALDRICH

FLORENCE COPPER, INC.
FLORENCE, ARIZONA

ABANDONMENT SCHEMATIC
RESOURCE BLOCK 54
TYPICAL INJECTION AND RECOVERY WELL

SCALE: AS SHOWN
JULY 2019

FIGURE E-24

TABLE E-24
WELLS WITHIN RESOURCE BLOCK 54
FLORENCE COPPER PROJECT
FLORENCE, ARIZONA

Well Number	Easting	Northing	Resource Block	Depth to Top of Bedrock (ft bgs)	Depth to Top of Injection Zone (ft bgs)	Depth to Bottom of Injection Zone (ft bgs)
433	847836	745990	54	412	452	1220
434	847907	746061	54	412	452	1220
435	847977	746131	54	412	452	1220
436	847977	745990	54	412	452	1220
437	847907	745990	54	412	452	1220
438	847977	746061	54	412	452	1220
439	848260	746061	54	412	452	1220
440	848260	745990	54	412	452	1220
441	848190	746131	54	412	452	1220
442	848190	746061	54	412	452	1220
443	848119	746131	54	412	452	1220
444	848190	745990	54	412	452	1220
445	848048	745990	54	412	452	1220
446	848119	745990	54	412	452	1220
447	848119	746061	54	412	452	1220
448	848048	746061	54	412	452	1220
449	848048	746131	54	412	452	1220
450	847836	745848	54	412	452	1220
451	847765	745919	54	412	452	1220
453	847977	745919	54	412	452	1220
454	847907	745919	54	412	452	1220
455	847836	745919	54	412	452	1220
456	847977	745848	54	412	452	1220
457	848260	745848	54	412	452	1220
458	848260	745919	54	412	452	1220
459	848190	745919	54	412	452	1220
460	848119	745919	54	412	452	1220
461	848048	745919	54	412	452	1220
462	848119	745848	54	412	452	1220
466	848119	746202	54	412	452	1220
468	848048	746202	54	412	452	1220
469	848402	745919	54	412	452	1220
470	848331	745990	54	412	452	1220
471	848331	745919	54	412	452	1220
2109	847976	745705	54	412	452	1220
2116	847906	745776	54	412	452	1220
2124	847906	745847	54	412	452	1220
2125	847976	745776	54	412	452	1220
2126	848118	745635	54	412	452	1220

TABLE E-24
WELLS WITHIN RESOURCE BLOCK 54
FLORENCE COPPER PROJECT
FLORENCE, ARIZONA

Well Number	Easting	Northing	Resource Block	Depth to Top of Bedrock (ft bgs)	Depth to Top of Injection Zone (ft bgs)	Depth to Bottom of Injection Zone (ft bgs)
2127	848188	745706	54	412	452	1220
2128	848259	745776	54	412	452	1220
2129	848330	745847	54	412	452	1220
2130	848188	745776	54	412	452	1220
2131	848118	745706	54	412	452	1220
2132	848047	745635	54	412	452	1220
2134	848048	745705	54	412	452	1220
2135	848118	745776	54	412	452	1220
2136	848047	745776	54	412	452	1220
2137	848188	745847	54	412	452	1220
2138	848047	745847	54	412	452	1220

Notes:

ft bgs = feet below ground surface

OMB No. 2040-0042 Approval Expires 4/30/2022

United States Environmental Protection Agency

WELL REWORK RECORD, PLUGGING AND ABANDONMENT PLAN, OR PLUGGING AND ABANDONMENT AFFIDAVIT

Name and Address, Phone Number and/or Email of Permittee

Florence Copper Project
1575 W Hunt Hwy,
Florence, AZ 85132

Permit or EPA ID Number	API Number	Full Well Name
R9UIC-AZ3-FY11-1		Block 55 Wells - See Attached Table E-25

State	County
Arizona	Pinal

Locate well in two directions from nearest lines of quarter section and drilling unit

Surface Location

NE 1/4 of SW 1/4 of Section 28 Township 4S Range 9E

_____ ft. from (N/S) _____ Line of quarter section

_____ ft. from (E/W) _____ Line of quarter section.

Latitude 33.049911

Longitude -111.431264

See Attached Table for Individual Well Coordinates.

Well Class	Timing of Action (pick one)	Type of Action (pick one)
☐ Class I ☐ Class II ☑ Class III ☐ Class V	☑ Notice Prior to Work Date Expected to Commence January 2027 ☐ Report After Work Date Work Ended	☐ Well Rework ☑ Plugging and Abandonment ☐ Conversion to a Non-Injection Well

Provide a narrative description of the work planned to be performed, or that was performed. Use additional pages as necessary. See instructions.

This plugging and abandonment applies to wells Class III wells to be constructed in block 55. There are 44 Class III multi-use injection/ recovery wells, planned for construction in this block. The injection and recovery wells will be of uniform design, and will be used for injection and recovery on an alternate basis. Some of the injection and recovery wells will be used as perimeter and observation wells prior to well field build-out.

The work performed includes plugging and abandonment of the Class III wells in resource block 55. Plugging and abandonment will be accomplished following procedures defined in Attachment E of the application. Plugging and abandonment details are shown on the attached Figure E-25.

Certification

I certify under the penalty of law that I have personally examined and am familiar with the information submitted in this document and all attachments and that, based on my inquiry of those individuals immediately responsible for obtaining the information, I believe that the information is true, accurate, and complete. I am aware that there are significant penalties for submitting false information, including the possibliity of fine and imprisonment. (Ref. 40 CFR § 144.32)

Name and Official Title *(Please type or print)*	Signature	Date Signed
Dan Johnson, VP - General Manager		10/3/2019

INSTRUCTIONS FOR FORM 7520-19

This form replaces forms 7520-12 and 7520-14. Use this form only when work is planned or has occurred that affects the well's construction or operation as an injection well, including work on the casing, tubing or packer (or for shallow Class V wells, the subsurface fluid emplacement network). Use one form per injection well. While reports or other information developed by contractors or service companies may be attached, this form must be signed by a responsible entity as described at 40 CFR 144.32. Note: operators closing Class V wells should use Form 7520-17.

NAME, ADDRESS, PHONE AND/OR EMAIL OF PERMITTEE: Enter the name and street address, city/town, state, and ZIP code of the permittee. Also provide an email address (if available) and/or a phone number.

PERMIT OR EPA ID NUMBER: Enter the well identification number or permit number assigned to the well by the EPA or the permitting authority.

API NUMBER: Enter the number assigned by the local jurisdiction (usually a State Oil and Gas Agency) using the American Petroleum Institute standard numbering system.

FULL WELL NAME: Enter the full name of the well or project.

Enter the **STATE** and **COUNTY** where the well is located. For States that do not have counties, use the name of that State's equivalent jurisdiction at a more local level.

WELL LOCATION: Fill in the complete township, range, and section to the nearest quarter-quarter section. A township is north or south of the baseline, and a range is east or west of the principal meridian (e.g., T12N, R34W). Also include the distance, in feet, from the nearest north or south line and nearest east or west line of the quarter-section. Also, enter the **latitude** and **longitude** of the well in decimal degrees, to five or six places if possible; be sure to include a negative sign for the longitude of a well in the Western Hemisphere and a negative sign for the latitude of a well in the Southern Hemisphere.

Enter the **WELL CLASS,** i.e., the class of injection well as defined in 40 CFR 144.6.

TIMING OF THE ACTION: Check ***Notice prior to work*** if the activity has not yet occurred (i.e., is planned). Check ***Report after work*** if the activity described has already occurred. As appropriate, include the date the activity is expected to start or the date the activity was completed. (Note this may not be available, e.g., for a plugging plan submitted with a permit application.)

TYPE OF ACTION: Check the appropriate box to describe the kind of activity being reported. Check ***Well Rework*** for work that was/will be performed on the well after it has already been in operation as an injection well. Check ***Plugging and Abandonment*** to report on plans for or descriptions of final closure/plugging after use as an injection well. Check ***Conversion to a Non-Injection Well*** if the well is to be converted to something other than an injection well.

Provide a **NARRATIVE DESCRIPTION** of the work planned to be performed, or that was performed. The narrative should include a description of the main procedures planned or that occurred during the work activity. A service company report, daily report, or similar document may be attached if it includes all the requested information and is clear and legible.

For well reworks, include the following information: The reason for the well rework; depths of activity; type of activity; changes to injection well configuration, well casing, or cement behind casing; any plug added to the well and its depth; any newly drilled interval and its depth; method(s) to demonstrate that the well has mechanical integrity (as applicable); and any deviations from the approved rework plan (as applicable).

For a well plugging plan, include the following information: Reason for the well plugging; number of plugs placed, and their depths; materials used as plugs (e.g., cast iron bridge plug, cement, cement retainer); method to set plugs; and wait-on-cement times, if any. Also provide one or more cost estimates from an independent firm in the business of plugging and abandoning wells to plug the well as described in the plan.

For well plugging affidavit, include the following information: Reason for the well plugging; number of plugs placed, and their depths; materials used as plugs (e.g., cast iron bridge plug, cement, cement retainer); method to set plugs; wait-on-cement times, if any; and any deviations from the approved plugging plan (if applicable).

For conversion to a non-injection well, include the following information: Depths of activity; type of activity; changes to injection well configuration, well casing, or cement behind casing; any plug added to the well and its depth; any newly drilled interval and its depth; depths of new perforations; and method(s) to demonstrate that the well has mechanical integrity (as applicable).

For all of the above activities, include a well sketch depicting the work, results of well tests/logging performed, service company tickets, and any other available information demonstrating how the work was/is to be performed. Also, specify whether depths are below ground surface, relative to Kelly bushing, etc.

CERTIFICATION: This form must be signed and dated by either: a responsible corporate officer for a corporation, by a general partner for a partnership, by the proprietor of a sole proprietorship, or by a principal executive or ranking elected official for a public agency.

PAPERWORK REDUCTION ACT NOTICE: The public reporting and recordkeeping burden for this collection of information is estimated to average between 6.0 and 7.9 hours per response, depending on the injection well class. Burden means the total time, effort, or financial resource expended by persons to generate, maintain, retain, or disclose or provide information to or for a Federal Agency. This includes the time needed to review instructions; develop, acquire, install, and utilize technology and systems for the purposes of collecting, validating, and verifying information, processing and maintaining information, and disclosing and providing information; adjust the existing ways to comply with any previously applicable instructions and requirements; train personnel to be able to respond to the collection of information; search data sources; complete and review the collection of information; and, transmit or otherwise disclose the information. An agency may not conduct or sponsor, and a person is not required to respond to, a collection of information unless it displays a currently valid OMB control number. Send comments on the Agency's need for this information, the accuracy of the provided burden estimates, and any suggested methods for minimizing respondent burden, including the use of automated collection techniques to Director, Collection Strategies Division, U.S. Environmental Protection Agency (2822), 1200 Pennsylvania Ave., NW., Washington, D.C. 20460. Include the OMB control number in any correspondence. Do not send the completed forms to this address.

PROPOSED DESIGN
INJECTION AND RECOVERY WELL

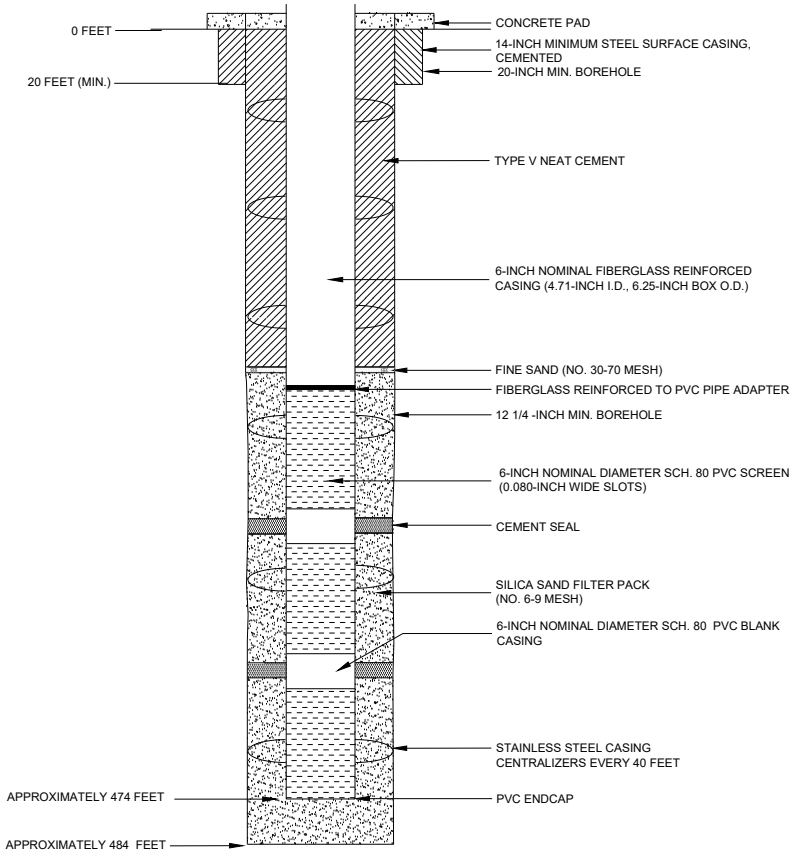

PROPOSED PLUGGING AND
ABANDONMENT
INJECTION AND RECOVERY WELL

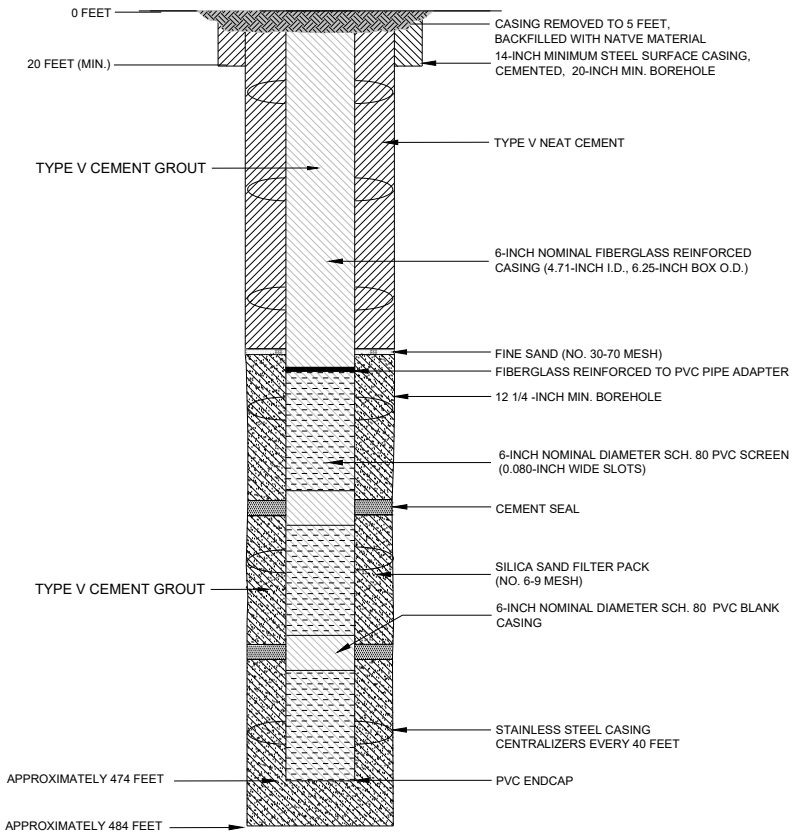

NOTES

1. WELL DESIGN DETAILS ARE BASED ON CORE HOLE AND WELL LOG RECORDS.

HALEY ALDRICH

FLORENCE COPPER, INC.
FLORENCE, ARIZONA

ABANDONMENT SCHEMATIC
RESOURCE BLOCK 55
TYPICAL INJECTION AND
RECOVERY WELL

SCALE: AS SHOWN
JULY 2019

FIGURE E-25

TABLE E-25
WELLS WITHIN RESOURCE BLOCK 55
FLORENCE COPPER PROJECT
FLORENCE, ARIZONA

Well Number	Easting	Northing	Resource Block	Depth to Top of Bedrock (ft bgs)	Depth to Top of Injection Zone (ft bgs)	Depth to Bottom of Injection Zone (ft bgs)
392	848543	745990	55	336	376	474
393	848614	746061	55	336	376	474
394	848685	746131	55	336	376	474
395	848684	745990	55	336	376	474
396	848614	745990	55	336	376	474
397	848685	746061	55	336	376	474
398	848755	746202	55	336	376	474
399	848755	745990	55	336	376	474
400	848755	746061	55	336	376	474
401	848755	746131	55	336	376	474
402	848614	745919	55	336	376	474
403	848755	745955	55	336	376	474
404	848967	745990	55	336	376	474
405	848967	746061	55	336	376	474
406	848897	745990	55	336	376	474
407	848826	746061	55	336	376	474
408	848897	746131	55	336	376	474
409	848897	746061	55	336	376	474
410	848826	745990	55	336	376	474
411	848826	746202	55	336	376	474
412	848826	746131	55	336	376	474
413	848897	745955	55	336	376	474
418	848472	745919	55	336	376	474
463	848543	745848	55	336	376	474
465	848543	745919	55	336	376	474
931	849038	745891	55	336	376	474
1640	848755	745636	55	336	376	474
1653	848826	745636	55	336	376	474
1654	848897	745707	55	336	376	474
1655	848967	745778	55	336	376	474
1656	848967	745848	55	336	376	474
1657	848897	745778	55	336	376	474
1658	848826	745707	55	336	376	474
1659	849038	745848	55	336	376	474
2173	848595	745847	55	336	376	474
2186	848683	745706	55	336	376	474
2191	848697	745847	55	336	376	474
2192	848683	745776	55	336	376	474
2193	848755	745705	55	336	376	474

TABLE E-25
WELLS WITHIN RESOURCE BLOCK 55
FLORENCE COPPER PROJECT
FLORENCE, ARIZONA

Well Number	Easting	Northing	Resource Block	Depth to Top of Bedrock (ft bgs)	Depth to Top of Injection Zone (ft bgs)	Depth to Bottom of Injection Zone (ft bgs)
2194	848754	745776	55	336	376	474
2195	848754	745847	55	336	376	474
2200	848825	745776	55	336	376	474
2201	848896	745847	55	336	376	474
2202	848825	745847	55	336	376	474

Notes:

ft bgs = feet below ground surface

OMB No. 2040-0042 Approval Expires 4/30/2022

United States Environmental Protection Agency

WELL REWORK RECORD, PLUGGING AND ABANDONMENT PLAN, OR PLUGGING AND ABANDONMENT AFFIDAVIT

Name and Address, Phone Number and/or Email of Permittee

Florence Copper Project
1575 W Hunt Hwy,
Florence, AZ 85132

Permit or EPA ID Number	API Number	Full Well Name
R9UIC-AZ3-FY11-1		Block 56 Wells - See Attached Table E-26

State	County
Arizona	Pinal

Locate well in two directions from nearest lines of quarter section and drilling unit

Surface Location

NW 1/4 of SE 1/4 of Section 28 Township 4S Range 9E

____ ft. from (N/S) ____ Line of quarter section

____ ft. from (E/W) ____ Line of quarter section.

Latitude 33.049632

Longitude -111.428882

See Attached Table for Individual Well Coordinates.

Well Class	Timing of Action (pick one)	Type of Action (pick one)
☐ Class I ☐ Class II ☑ Class III ☐ Class V	☑ Notice Prior to Work Date Expected to Commence January 2027 ☐ Report After Work Date Work Ended	☐ Well Rework ☑ Plugging and Abandonment ☐ Conversion to a Non-Injection Well

Provide a narrative description of the work planned to be performed, or that was performed. Use additional pages as necessary. See instructions.

This plugging and abandonment applies to wells Class III wells to be constructed in block 56. There are 48 Class III multi-use injection/ recovery wells, planned for construction in this block. The injection and recovery wells will be of uniform design, and will be used for injection and recovery on an alternate basis. Some of the injection and recovery wells will be used as perimeter and observation wells prior to well field build-out.

The work performed includes plugging and abandonment of the Class III wells in resource block 56. Plugging and abandonment will be accomplished following procedures defined in Attachment E of the application. Plugging and abandonment details are shown on the attached Figure E-26.

Certification

I certify under the penalty of law that I have personally examined and am familiar with the information submitted in this document and all attachments and that, based on my inquiry of those individuals immediately responsible for obtaining the information, I believe that the information is true, accurate, and complete. I am aware that there are significant penalties for submitting false information, including the possibliity of fine and imprisonment. (Ref. 40 CFR § 144.32)

Name and Official Title *(Please type or print)*	Signature	Date Signed
Dan Johnson, VP - General Manager		10/3/2019

INSTRUCTIONS FOR FORM 7520-19

This form replaces forms 7520-12 and 7520-14. Use this form only when work is planned or has occurred that affects the well's construction or operation as an injection well, including work on the casing, tubing or packer (or for shallow Class V wells, the subsurface fluid emplacement network). Use one form per injection well. While reports or other information developed by contractors or service companies may be attached, this form must be signed by a responsible entity as described at 40 CFR 144.32. Note: operators closing Class V wells should use Form 7520-17.

NAME, ADDRESS, PHONE AND/OR EMAIL OF PERMITTEE: Enter the name and street address, city/town, state, and ZIP code of the permittee. Also provide an email address (if available) and/or a phone number.

PERMIT OR EPA ID NUMBER: Enter the well identification number or permit number assigned to the well by the EPA or the permitting authority.

API NUMBER: Enter the number assigned by the local jurisdiction (usually a State Oil and Gas Agency) using the American Petroleum Institute standard numbering system.

FULL WELL NAME: Enter the full name of the well or project.

Enter the **STATE** and **COUNTY** where the well is located. For States that do not have counties, use the name of that State's equivalent jurisdiction at a more local level.

WELL LOCATION: Fill in the complete township, range, and section to the nearest quarter-quarter section. A township is north or south of the baseline, and a range is east or west of the principal meridian (e.g., T12N, R34W). Also include the distance, in feet, from the nearest north or south line and nearest east or west line of the quarter-section. Also, enter the **latitude** and **longitude** of the well in decimal degrees, to five or six places if possible; be sure to include a negative sign for the longitude of a well in the Western Hemisphere and a negative sign for the latitude of a well in the Southern Hemisphere.

Enter the **WELL CLASS,** i.e., the class of injection well as defined in 40 CFR 144.6.

TIMING OF THE ACTION: Check ***Notice prior to work*** if the activity has not yet occurred (i.e., is planned). Check ***Report after work*** if the activity described has already occurred. As appropriate, include the date the activity is expected to start or the date the activity was completed. (Note this may not be available, e.g., for a plugging plan submitted with a permit application.)

TYPE OF ACTION: Check the appropriate box to describe the kind of activity being reported. Check ***Well Rework*** for work that was/will be performed on the well after it has already been in operation as an injection well. Check ***Plugging and Abandonment*** to report on plans for or descriptions of final closure/plugging after use as an injection well. Check ***Conversion to a Non-Injection Well*** if the well is to be converted to something other than an injection well.

Provide a **NARRATIVE DESCRIPTION** of the work planned to be performed, or that was performed. The narrative should include a description of the main procedures planned or that occurred during the work activity. A service company report, daily report, or similar document may be attached if it includes all the requested information and is clear and legible.

For well reworks, include the following information: The reason for the well rework; depths of activity; type of activity; changes to injection well configuration, well casing, or cement behind casing; any plug added to the well and its depth; any newly drilled interval and its depth; method(s) to demonstrate that the well has mechanical integrity (as applicable); and any deviations from the approved rework plan (as applicable).

For a well plugging plan, include the following information: Reason for the well plugging; number of plugs placed, and their depths; materials used as plugs (e.g., cast iron bridge plug, cement, cement retainer); method to set plugs; and wait-on-cement times, if any. Also provide one or more cost estimates from an independent firm in the business of plugging and abandoning wells to plug the well as described in the plan.

For well plugging affidavit, include the following information: Reason for the well plugging; number of plugs placed, and their depths; materials used as plugs (e.g., cast iron bridge plug, cement, cement retainer); method to set plugs; wait-on-cement times, if any; and any deviations from the approved plugging plan (if applicable).

For conversion to a non-injection well, include the following information: Depths of activity; type of activity; changes to injection well configuration, well casing, or cement behind casing; any plug added to the well and its depth; any newly drilled interval and its depth; depths of new perforations; and method(s) to demonstrate that the well has mechanical integrity (as applicable).

For all of the above activities, include a well sketch depicting the work, results of well tests/logging performed, service company tickets, and any other available information demonstrating how the work was/is to be performed. Also, specify whether depths are below ground surface, relative to Kelly bushing, etc.

CERTIFICATION: This form must be signed and dated by either: a responsible corporate officer for a corporation, by a general partner for a partnership, by the proprietor of a sole proprietorship, or by a principal executive or ranking elected official for a public agency.

PAPERWORK REDUCTION ACT NOTICE: The public reporting and recordkeeping burden for this collection of information is estimated to average between 6.0 and 7.9 hours per response, depending on the injection well class. Burden means the total time, effort, or financial resource expended by persons to generate, maintain, retain, or disclose or provide information to or for a Federal Agency. This includes the time needed to review instructions; develop, acquire, install, and utilize technology and systems for the purposes of collecting, validating, and verifying information, processing and maintaining information, and disclosing and providing information; adjust the existing ways to comply with any previously applicable instructions and requirements; train personnel to be able to respond to the collection of information; search data sources; complete and review the collection of information; and, transmit or otherwise disclose the information. An agency may not conduct or sponsor, and a person is not required to respond to, a collection of information unless it displays a currently valid OMB control number. Send comments on the Agency's need for this information, the accuracy of the provided burden estimates, and any suggested methods for minimizing respondent burden, including the use of automated collection techniques to Director, Collection Strategies Division, U.S. Environmental Protection Agency (2822), 1200 Pennsylvania Ave., NW., Washington, D.C. 20460. Include the OMB control number in any correspondence. Do not send the completed forms to this address.

PROPOSED DESIGN
INJECTION AND RECOVERY WELL

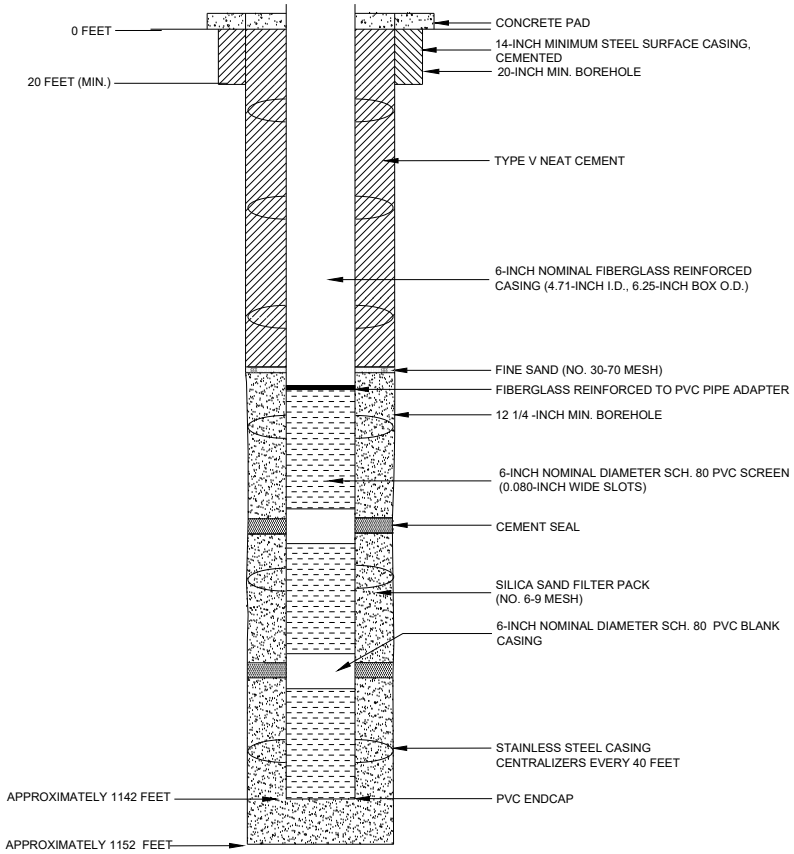

PROPOSED PLUGGING AND
ABANDONMENT
INJECTION AND RECOVERY WELL

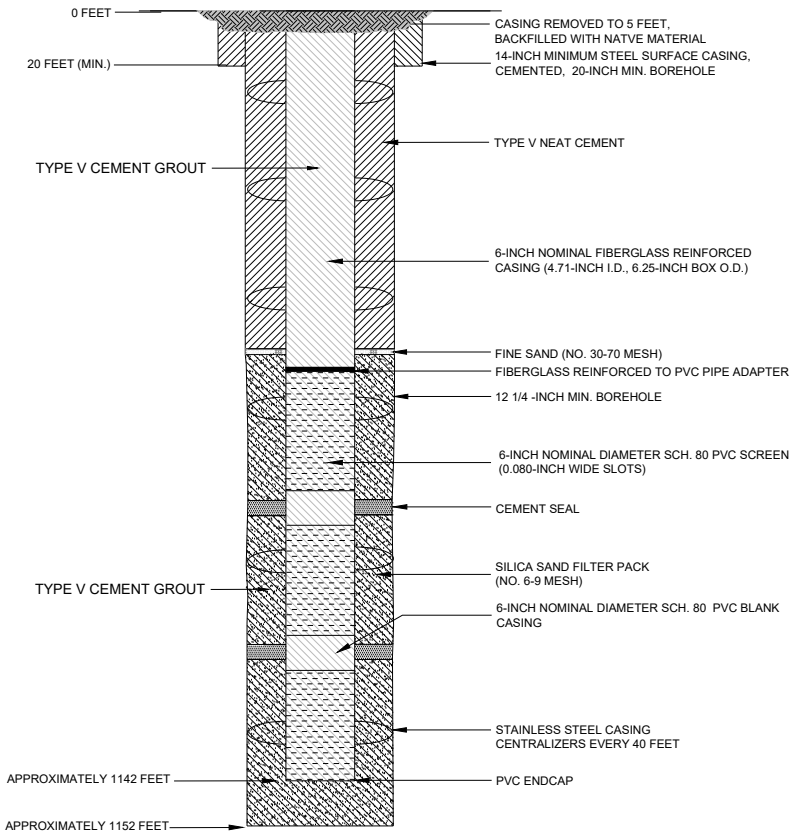

NOTES

1. WELL DESIGN DETAILS ARE BASED ON CORE HOLE AND WELL LOG RECORDS.

HALEY ALDRICH

FLORENCE COPPER, INC.
FLORENCE, ARIZONA

ABANDONMENT SCHEMATIC
RESOURCE BLOCK 56
TYPICAL INJECTION AND
RECOVERY WELL

SCALE: AS SHOWN
JULY 2019

FIGURE E-26

TABLE E-26
WELLS WITHIN RESOURCE BLOCK 56
FLORENCE COPPER PROJECT
FLORENCE, ARIZONA

Well Number	Easting	Northing	Resource Block	Depth to Top of Bedrock (ft bgs)	Depth to Top of Injection Zone (ft bgs)	Depth to Bottom of Injection Zone (ft bgs)
130	849321	746077	56	455	495	1142
225	849533	746202	56	455	495	1142
231	849533	746145	56	455	495	1142
235	849462	746202	56	455	495	1142
236	849392	746131	56	455	495	1142
778	849816	745919	56	455	495	1142
779	849745	745919	56	455	495	1142
932	849674	745990	56	455	495	1142
937	849674	746061	56	455	495	1142
938	849604	745990	56	455	495	1142
939	849462	745990	56	455	495	1142
940	849533	746061	56	455	495	1142
942	849604	746061	56	455	495	1142
943	849533	745990	56	455	495	1142
944	849392	746013	56	455	495	1142
945	849462	746034	56	455	495	1142
946	849392	745990	56	455	495	1142
947	849321	745990	56	455	495	1142
948	849250	745962	56	455	495	1142
949	849745	745990	56	455	495	1142
954	849674	745848	56	455	495	1142
955	849604	745919	56	455	495	1142
956	849533	745848	56	455	495	1142
957	849533	745919	56	455	495	1142
958	849462	745919	56	455	495	1142
959	849392	745848	56	455	495	1142
960	849392	745919	56	455	495	1142
961	849321	745919	56	455	495	1142
962	849250	745919	56	455	495	1142
963	849179	745919	56	455	495	1142
964	849250	745848	56	455	495	1142
965	849674	745919	56	455	495	1142
1480	849462	745636	56	455	495	1142
1562	849533	745636	56	455	495	1142
1563	849604	745707	56	455	495	1142
1564	849674	745778	56	455	495	1142
1566	849462	745707	56	455	495	1142
1567	849533	745778	56	455	495	1142
1568	849604	745848	56	455	495	1142

TABLE E-26
WELLS WITHIN RESOURCE BLOCK 56
FLORENCE COPPER PROJECT
FLORENCE, ARIZONA

Well Number	Easting	Northing	Resource Block	Depth to Top of Bedrock (ft bgs)	Depth to Top of Injection Zone (ft bgs)	Depth to Bottom of Injection Zone (ft bgs)
1569	849604	745778	56	455	495	1142
1570	849533	745707	56	455	495	1142
1573	849462	745778	56	455	495	1142
1574	849392	745707	56	455	495	1142
1577	849392	745778	56	455	495	1142
1578	849462	745848	56	455	495	1142
1579	849321	745778	56	455	495	1142
1583	849321	745848	56	455	495	1142
1585	849745	745848	56	455	495	1142

Notes:

ft bgs = feet below ground surface

OMB No. 2040-0042 Approval Expires 4/30/2022

United States Environmental Protection Agency

WELL REWORK RECORD, PLUGGING AND ABANDONMENT PLAN, OR PLUGGING AND ABANDONMENT AFFIDAVIT

Name and Address, Phone Number and/or Email of Permittee

Florence Copper Project
1575 W Hunt Hwy,
Florence, AZ 85132

Permit or EPA ID Number	API Number	Full Well Name
R9UIC-AZ3-FY11-1		Block 57 Wells - See Attached Table E-27

State	County
Arizona	Pinal

Locate well in two directions from nearest lines of quarter section and drilling unit

Surface Location

NW **1/4 of** SE **1/4 of Section** 28 **Township** 4S **Range** 9E

_____ **ft. from (N/S)** _____ **Line of quarter section**

_____ **ft. from (E/W)** _____ **Line of quarter section.**

Latitude 33.049658

Longitude -111.426531

See Attached Table for Individual Well Coordinates.

Well Class	Timing of Action (pick one)	Type of Action (pick one)
☐ Class I ☐ Class II ☑ Class III ☐ Class V	☑ Notice Prior to Work Date Expected to Commence January 2027 ☐ Report After Work Date Work Ended	☐ Well Rework ☑ Plugging and Abandonment ☐ Conversion to a Non-Injection Well

Provide a narrative description of the work planned to be performed, or that was performed. Use additional pages as necessary. See instructions.

This plugging and abandonment applies to wells Class III wells to be constructed in block 57. There are 44 Class III multi-use injection/ recovery wells, 1 dedicated Class III observation, and 3 Class III perimeter wells planned for construction in this block. The injection and recovery wells will be of uniform design, and will be used for injection and recovery on an alternate basis. Some of the injection and recovery wells will be used as perimeter and observation wells prior to well field build-out. The dedicated perimeter observation well will have a design and depth similar to the injection and recovery wells, but will not have a segmented well screen.

The work performed includes plugging and abandonment of the Class III wells in resource block 57. Plugging and abandonment will be accomplished following procedures defined in Attachment E of the application. Plugging and abandonment details are shown on the attached Figures E-27a and E-27b.

Certification

I certify under the penalty of law that I have personally examined and am familiar with the information submitted in this document and all attachments and that, based on my inquiry of those individuals immediately responsible for obtaining the information, I believe that the information is true, accurate, and complete. I am aware that there are significant penalties for submitting false information, including the possibliity of fine and imprisonment. (Ref. 40 CFR § 144.32)

Name and Official Title *(Please type or print)*	Signature	Date Signed
Dan Johnson, VP - General Manager		10/3/2019

INSTRUCTIONS FOR FORM 7520-19

This form replaces forms 7520-12 and 7520-14. Use this form only when work is planned or has occurred that affects the well's construction or operation as an injection well, including work on the casing, tubing or packer (or for shallow Class V wells, the subsurface fluid emplacement network). Use one form per injection well. While reports or other information developed by contractors or service companies may be attached, this form must be signed by a responsible entity as described at 40 CFR 144.32. Note: operators closing Class V wells should use Form 7520-17.

NAME, ADDRESS, PHONE AND/OR EMAIL OF PERMITTEE: Enter the name and street address, city/town, state, and ZIP code of the permittee. Also provide an email address (if available) and/or a phone number.

PERMIT OR EPA ID NUMBER: Enter the well identification number or permit number assigned to the well by the EPA or the permitting authority.

API NUMBER: Enter the number assigned by the local jurisdiction (usually a State Oil and Gas Agency) using the American Petroleum Institute standard numbering system.

FULL WELL NAME: Enter the full name of the well or project.

Enter the **STATE** and **COUNTY** where the well is located. For States that do not have counties, use the name of that State's equivalent jurisdiction at a more local level.

WELL LOCATION: Fill in the complete township, range, and section to the nearest quarter-quarter section. A township is north or south of the baseline, and a range is east or west of the principal meridian (e.g., T12N, R34W). Also include the distance, in feet, from the nearest north or south line and nearest east or west line of the quarter-section. Also, enter the **latitude** and **longitude** of the well in decimal degrees, to five or six places if possible; be sure to include a negative sign for the longitude of a well in the Western Hemisphere and a negative sign for the latitude of a well in the Southern Hemisphere.

Enter the **WELL CLASS,** i.e., the class of injection well as defined in 40 CFR 144.6.

TIMING OF THE ACTION: Check ***Notice prior to work*** if the activity has not yet occurred (i.e., is planned). Check ***Report after work*** if the activity described has already occurred. As appropriate, include the date the activity is expected to start or the date the activity was completed. (Note this may not be available, e.g., for a plugging plan submitted with a permit application.)

TYPE OF ACTION: Check the appropriate box to describe the kind of activity being reported. Check ***Well Rework*** for work that was/will be performed on the well after it has already been in operation as an injection well. Check ***Plugging and Abandonment*** to report on plans for or descriptions of final closure/plugging after use as an injection well. Check ***Conversion to a Non-Injection Well*** if the well is to be converted to something other than an injection well.

Provide a **NARRATIVE DESCRIPTION** of the work planned to be performed, or that was performed. The narrative should include a description of the main procedures planned or that occurred during the work activity. A service company report, daily report, or similar document may be attached if it includes all the requested information and is clear and legible.

For well reworks, include the following information: The reason for the well rework; depths of activity; type of activity; changes to injection well configuration, well casing, or cement behind casing; any plug added to the well and its depth; any newly drilled interval and its depth; method(s) to demonstrate that the well has mechanical integrity (as applicable); and any deviations from the approved rework plan (as applicable).

For a well plugging plan, include the following information: Reason for the well plugging; number of plugs placed, and their depths; materials used as plugs (e.g., cast iron bridge plug, cement, cement retainer); method to set plugs; and wait-on-cement times, if any. Also provide one or more cost estimates from an independent firm in the business of plugging and abandoning wells to plug the well as described in the plan.

For well plugging affidavit, include the following information: Reason for the well plugging; number of plugs placed, and their depths; materials used as plugs (e.g., cast iron bridge plug, cement, cement retainer); method to set plugs; wait-on-cement times, if any; and any deviations from the approved plugging plan (if applicable).

For conversion to a non-injection well, include the following information: Depths of activity; type of activity; changes to injection well configuration, well casing, or cement behind casing; any plug added to the well and its depth; any newly drilled interval and its depth; depths of new perforations; and method(s) to demonstrate that the well has mechanical integrity (as applicable).

For all of the above activities, include a well sketch depicting the work, results of well tests/logging performed, service company tickets, and any other available information demonstrating how the work was/is to be performed. Also, specify whether depths are below ground surface, relative to Kelly bushing, etc.

CERTIFICATION: This form must be signed and dated by either: a responsible corporate officer for a corporation, by a general partner for a partnership, by the proprietor of a sole proprietorship, or by a principal executive or ranking elected official for a public agency.

PAPERWORK REDUCTION ACT NOTICE: The public reporting and recordkeeping burden for this collection of information is estimated to average between 6.0 and 7.9 hours per response, depending on the injection well class. Burden means the total time, effort, or financial resource expended by persons to generate, maintain, retain, or disclose or provide information to or for a Federal Agency. This includes the time needed to review instructions; develop, acquire, install, and utilize technology and systems for the purposes of collecting, validating, and verifying information, processing and maintaining information, and disclosing and providing information; adjust the existing ways to comply with any previously applicable instructions and requirements; train personnel to be able to respond to the collection of information; search data sources; complete and review the collection of information; and, transmit or otherwise disclose the information. An agency may not conduct or sponsor, and a person is not required to respond to, a collection of information unless it displays a currently valid OMB control number. Send comments on the Agency's need for this information, the accuracy of the provided burden estimates, and any suggested methods for minimizing respondent burden, including the use of automated collection techniques to Director, Collection Strategies Division, U.S. Environmental Protection Agency (2822), 1200 Pennsylvania Ave., NW., Washington, D.C. 20460. Include the OMB control number in any correspondence. Do not send the completed forms to this address.

PROPOSED DESIGN
INJECTION AND RECOVERY WELL

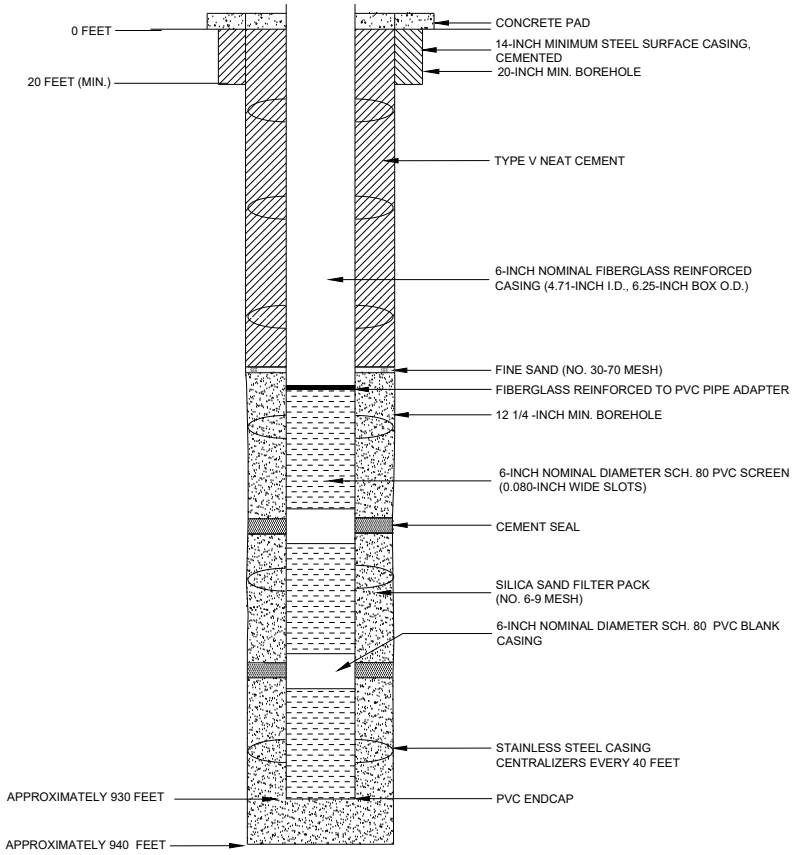

PROPOSED PLUGGING AND
ABANDONMENT
INJECTION AND RECOVERY WELL

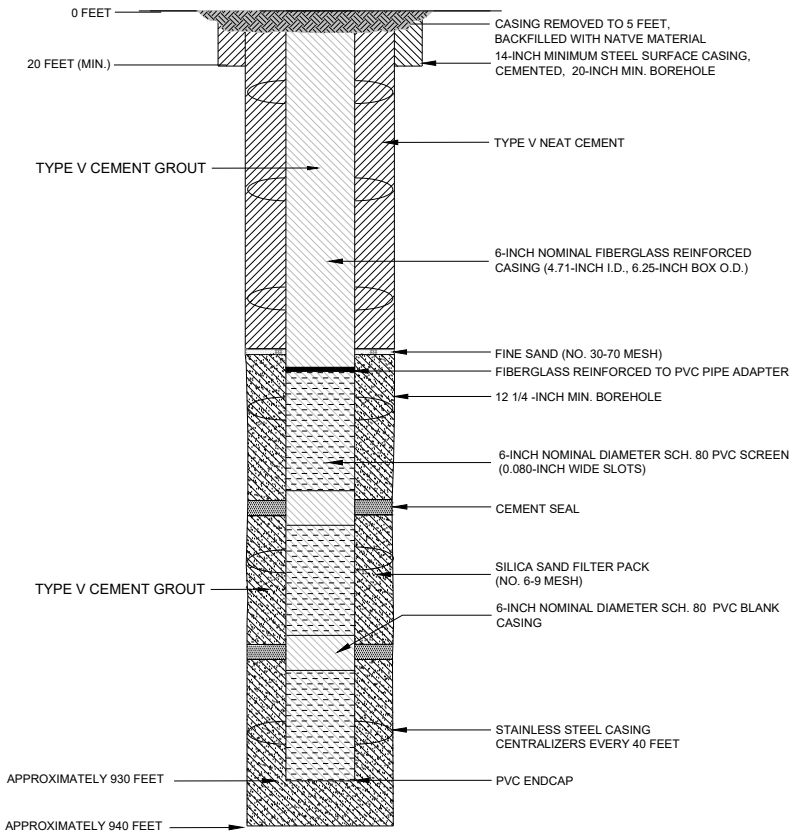

NOTES

1. WELL DESIGN DETAILS ARE BASED ON CORE HOLE AND WELL LOG RECORDS.

HALEY ALDRICH

FLORENCE COPPER, INC.
FLORENCE, ARIZONA

ABANDONMENT SCHEMATIC
RESOURCE BLOCK 57
TYPICAL INJECTION AND
RECOVERY WELL

SCALE: AS SHOWN
JULY 2019

FIGURE E-27a

Saved by: MNICHOLLS Printed: 7/25/2019 7:20 PM Sheet: HA-FIG-A-L(2)
\\HALEYALDRICH.COM\SHARE\PHX_COMMON\PROJECTS\FLORENCE COPPER\132473 FLORENCE GROUNDWATER PERMITTING\CAD\132473_000-OBSERVATION_WELL_CONSTRUCTION DIAGRAM.DWG

PROPOSED DESIGN
OBSERVATION/PERIMETER WELL

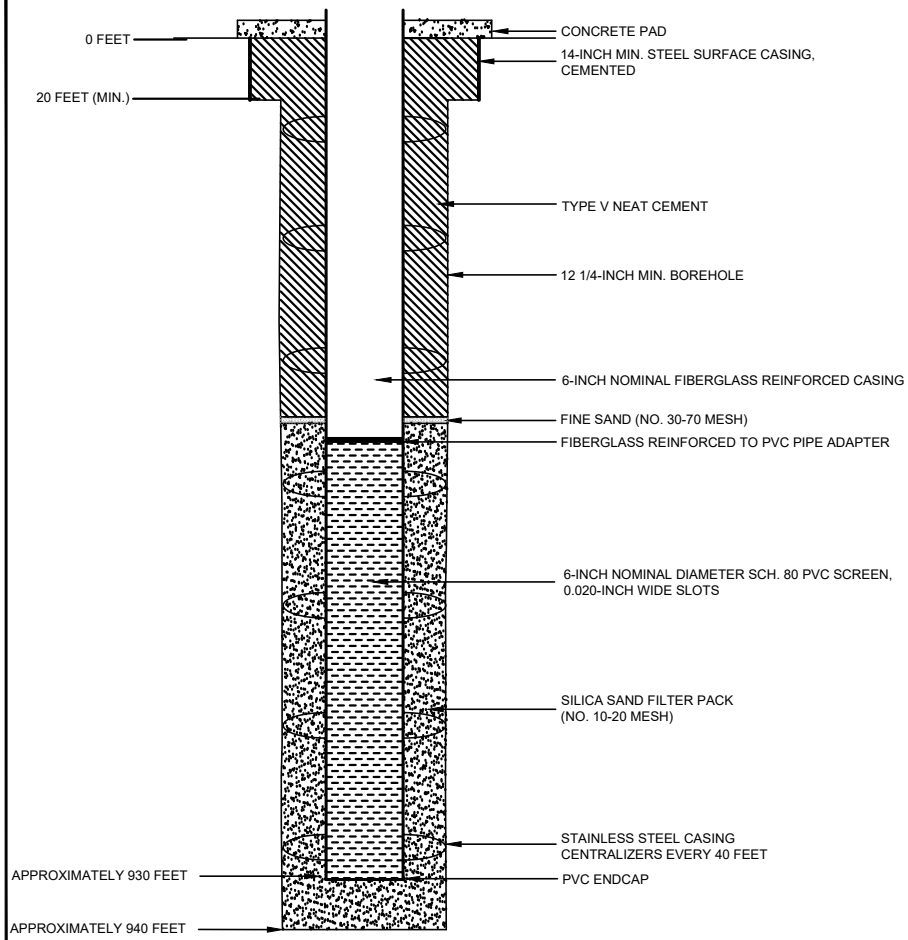

PROPOSED PLUGGING AND
ABANDONMENT
OBSERVATION/PERIMETER WELL

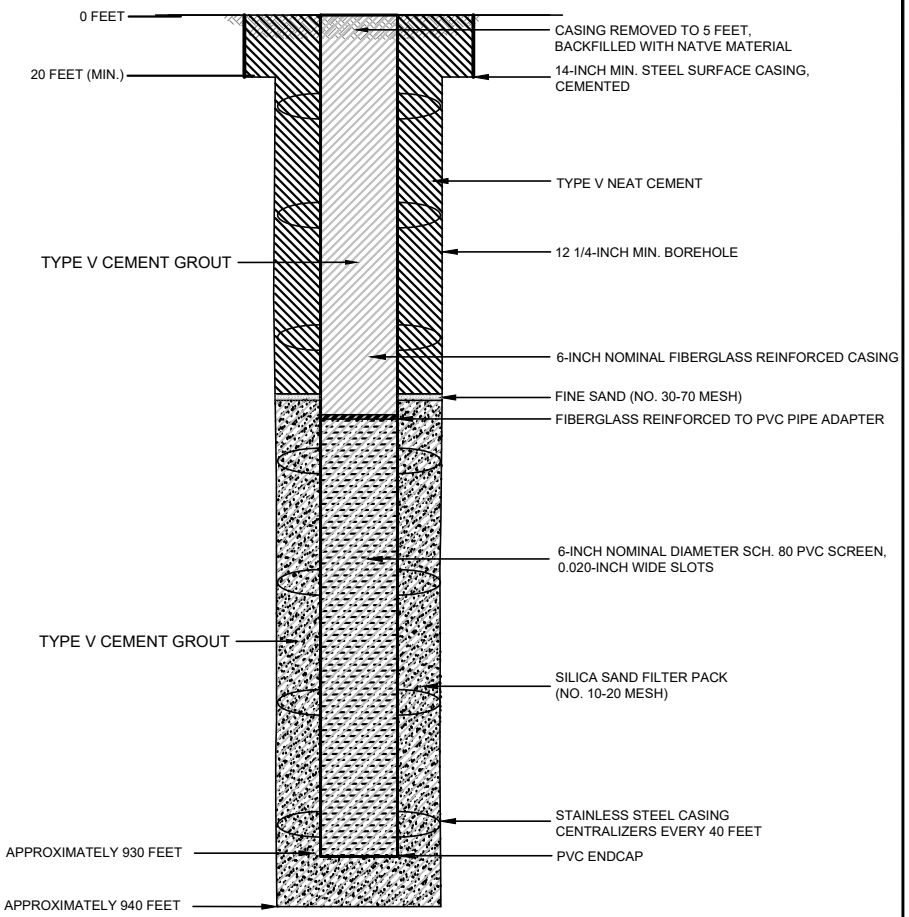

NOTES

1. WELL DESIGN DETAILS ARE BASED ON CORE HOLE AND WELL LOG RECORDS.

HALEY ALDRICH

FLORENCE COPPER, INC.
FLORENCE, ARIZONA

ABANDONMENT SCHEMATIC
RESOURCE BLOCK 57
OBSERVATION/PERIMETER WELL

JULY 2019
SCALE: AS SHOWN

FIGURE E-27b

TABLE E-27
WELLS WITHIN RESOURCE BLOCK 57
FLORENCE COPPER PROJECT
FLORENCE, ARIZONA

Well Number	Easting	Northing	Resource Block	Depth to Top of Bedrock (ft bgs)	Depth to Top of Injection Zone (ft bgs)	Depth to Bottom of Injection Zone (ft bgs)
786	849886	745919	57	466	506	930
787	850099	745990	57	466	506	930
788	850169	746061	57	466	506	930
789	850240	746131	57	466	506	930
790	850169	746131	57	466	506	930
791	850099	746061	57	466	506	930
792	850028	745990	57	466	506	930
793	850099	746131	57	466	506	930
794	850028	746061	57	466	506	930
795	849957	745990	57	466	506	930
796	850240	745990	57	466	506	930
797	850169	745990	57	466	506	930
798	850240	746061	57	466	506	930
810	850452	745990	57	466	506	930
811	850311	745990	57	466	506	930
1628	850240	745778	57	466	506	930
1627	850169	745849	57	466	506	930
782	850099	746164	57	466	506	930
812	850381	745990	57	466	506	930
813	850381	746061	57	466	506	930
814	850311	746061	57	466	506	930
815	850311	746131	57	466	506	930
816	850099	745849	57	466	506	930
817	850028	745919	57	466	506	930
818	849957	745848	57	466	506	930
819	849957	745919	57	466	506	930
820	850240	745919	57	466	506	930
821	850169	745919	57	466	506	930
822	850099	745919	57	466	506	930
823	850240	745849	57	466	506	930
824	850523	745919	57	466	506	930
825	850452	745919	57	466	506	930
826	850381	745919	57	466	506	930
829	850170	746163	57	466	506	930
827	850311	745919	57	466	506	930
967	850240	745636	57	466	506	930
969	850240	745707	57	466	506	930
970	850169	745636	57	466	506	930
1615	850169	745707	57	466	506	930

TABLE E-27
WELLS WITHIN RESOURCE BLOCK 57
FLORENCE COPPER PROJECT
FLORENCE, ARIZONA

Well Number	Easting	Northing	Resource Block	Depth to Top of Bedrock (ft bgs)	Depth to Top of Injection Zone (ft bgs)	Depth to Bottom of Injection Zone (ft bgs)
1618	850099	745778	57	466	506	930
1619	850169	745778	57	466	506	930
1620	850099	745707	57	466	506	930
1624	850028	745849	57	466	506	930
1625	850028	745778	57	466	506	930
O17	850381	745778	57	466	506	930
P32	850452	745849	57	466	506	930
P33	850311	745848	57	466	506	930
P34	850311	745707	57	466	506	930

Notes:

ft bgs = feet below ground surface

OMB No. 2040-0042 Approval Expires 4/30/2022

United States Environmental Protection Agency

WELL REWORK RECORD, PLUGGING AND ABANDONMENT PLAN, OR PLUGGING AND ABANDONMENT AFFIDAVIT

Name and Address, Phone Number and/or Email of Permittee

Florence Copper Project
1575 W Hunt Hwy,
Florence, AZ 85132

Permit or EPA ID Number	API Number	Full Well Name
R9UIC-AZ3-FY11-1		Block 61 Wells - See Attached Table E-28

State	County
Arizona	Pinal

Locate well in two directions from nearest lines of quarter section and drilling unit

Surface Location

SW 1/4 of SW 1/4 of Section 28 Township 4S Range 9E

ft. from (N/S) Line of quarter section

ft. from (E/W) Line of quarter section.

Latitude 33.048659

Longitude -111.436081

See Attached Table for Individual Well Coordinates.

Well Class	Timing of Action (pick one)	Type of Action (pick one)
☐ Class I ☐ Class II ☑ Class III ☐ Class V	☑ Notice Prior to Work Date Expected to Commence January 2027 ☐ Report After Work Date Work Ended	☐ Well Rework ☑ Plugging and Abandonment ☐ Conversion to a Non-Injection Well

Provide a narrative description of the work planned to be performed, or that was performed. Use additional pages as necessary. See instructions.

This plugging and abandonment applies to wells Class III wells to be constructed in block 61. There are 10 Class III multi-use injection/ recovery wells, 3 dedicated Class III observation, and 4 Class III perimeter wells planned for construction in this block. The injection and recovery wells will be of uniform design, and will be used for injection and recovery on an alternate basis. Some of the injection and recovery wells will be used as perimeter and observation wells prior to well field build-out. The dedicated perimeter observation well will have a design and depth similar to the injection and recovery wells, but will not have a segmented well screen.

The work performed includes plugging and abandonment of the Class III wells in resource block 61. Plugging and abandonment will be accomplished following procedures defined in Attachment E of the application. Plugging and abandonment details are shown on the attached Figures E-28a and E-28b.

Certification

I certify under the penalty of law that I have personally examined and am familiar with the information submitted in this document and all attachments and that, based on my inquiry of those individuals immediately responsible for obtaining the information, I believe that the information is true, accurate, and complete. I am aware that there are significant penalties for submitting false information, including the possibliity of fine and imprisonment. (Ref. 40 CFR § 144.32)

Name and Official Title *(Please type or print)*	Signature	Date Signed
Dan Johnson, VP - General Manager		10/3/2019

INSTRUCTIONS FOR FORM 7520-19

This form replaces forms 7520-12 and 7520-14. Use this form only when work is planned or has occurred that affects the well's construction or operation as an injection well, including work on the casing, tubing or packer (or for shallow Class V wells, the subsurface fluid emplacement network). Use one form per injection well. While reports or other information developed by contractors or service companies may be attached, this form must be signed by a responsible entity as described at 40 CFR 144.32. Note: operators closing Class V wells should use Form 7520-17.

NAME, ADDRESS, PHONE AND/OR EMAIL OF PERMITTEE: Enter the name and street address, city/town, state, and ZIP code of the permittee. Also provide an email address (if available) and/or a phone number.

PERMIT OR EPA ID NUMBER: Enter the well identification number or permit number assigned to the well by the EPA or the permitting authority.

API NUMBER: Enter the number assigned by the local jurisdiction (usually a State Oil and Gas Agency) using the American Petroleum Institute standard numbering system.

FULL WELL NAME: Enter the full name of the well or project.

Enter the **STATE** and **COUNTY** where the well is located. For States that do not have counties, use the name of that State's equivalent jurisdiction at a more local level.

WELL LOCATION: Fill in the complete township, range, and section to the nearest quarter-quarter section. A township is north or south of the baseline, and a range is east or west of the principal meridian (e.g., T12N, R34W). Also include the distance, in feet, from the nearest north or south line and nearest east or west line of the quarter-section. Also, enter the **latitude** and **longitude** of the well in decimal degrees, to five or six places if possible; be sure to include a negative sign for the longitude of a well in the Western Hemisphere and a negative sign for the latitude of a well in the Southern Hemisphere.

Enter the **WELL CLASS,** i.e., the class of injection well as defined in 40 CFR 144.6.

TIMING OF THE ACTION: Check ***Notice prior to work*** if the activity has not yet occurred (i.e., is planned). Check ***Report after work*** if the activity described has already occurred. As appropriate, include the date the activity is expected to start or the date the activity was completed. (Note this may not be available, e.g., for a plugging plan submitted with a permit application.)

TYPE OF ACTION: Check the appropriate box to describe the kind of activity being reported. Check ***Well Rework*** for work that was/will be performed on the well after it has already been in operation as an injection well. Check ***Plugging and Abandonment*** to report on plans for or descriptions of final closure/plugging after use as an injection well. Check ***Conversion to a Non-Injection Well*** if the well is to be converted to something other than an injection well.

Provide a **NARRATIVE DESCRIPTION** of the work planned to be performed, or that was performed. The narrative should include a description of the main procedures planned or that occurred during the work activity. A service company report, daily report, or similar document may be attached if it includes all the requested information and is clear and legible.

For well reworks, include the following information: The reason for the well rework; depths of activity; type of activity; changes to injection well configuration, well casing, or cement behind casing; any plug added to the well and its depth; any newly drilled interval and its depth; method(s) to demonstrate that the well has mechanical integrity (as applicable); and any deviations from the approved rework plan (as applicable).

For a well plugging plan, include the following information: Reason for the well plugging; number of plugs placed, and their depths; materials used as plugs (e.g., cast iron bridge plug, cement, cement retainer); method to set plugs; and wait-on-cement times, if any. Also provide one or more cost estimates from an independent firm in the business of plugging and abandoning wells to plug the well as described in the plan.

For well plugging affidavit, include the following information: Reason for the well plugging; number of plugs placed, and their depths; materials used as plugs (e.g., cast iron bridge plug, cement, cement retainer); method to set plugs; wait-on-cement times, if any; and any deviations from the approved plugging plan (if applicable).

For conversion to a non-injection well, include the following information: Depths of activity; type of activity; changes to injection well configuration, well casing, or cement behind casing; any plug added to the well and its depth; any newly drilled interval and its depth; depths of new perforations; and method(s) to demonstrate that the well has mechanical integrity (as applicable).

For all of the above activities, include a well sketch depicting the work, results of well tests/logging performed, service company tickets, and any other available information demonstrating how the work was/is to be performed. Also, specify whether depths are below ground surface, relative to Kelly bushing, etc.

CERTIFICATION: This form must be signed and dated by either: a responsible corporate officer for a corporation, by a general partner for a partnership, by the proprietor of a sole proprietorship, or by a principal executive or ranking elected official for a public agency.

PAPERWORK REDUCTION ACT NOTICE: The public reporting and recordkeeping burden for this collection of information is estimated to average between 6.0 and 7.9 hours per response, depending on the injection well class. Burden means the total time, effort, or financial resource expended by persons to generate, maintain, retain, or disclose or provide information to or for a Federal Agency. This includes the time needed to review instructions; develop, acquire, install, and utilize technology and systems for the purposes of collecting, validating, and verifying information, processing and maintaining information, and disclosing and providing information; adjust the existing ways to comply with any previously applicable instructions and requirements; train personnel to be able to respond to the collection of information; search data sources; complete and review the collection of information; and, transmit or otherwise disclose the information. An agency may not conduct or sponsor, and a person is not required to respond to, a collection of information unless it displays a currently valid OMB control number. Send comments on the Agency's need for this information, the accuracy of the provided burden estimates, and any suggested methods for minimizing respondent burden, including the use of automated collection techniques to Director, Collection Strategies Division, U.S. Environmental Protection Agency (2822), 1200 Pennsylvania Ave., NW., Washington, D.C. 20460. Include the OMB control number in any correspondence. Do not send the completed forms to this address.

PROPOSED DESIGN
INJECTION AND RECOVERY WELL

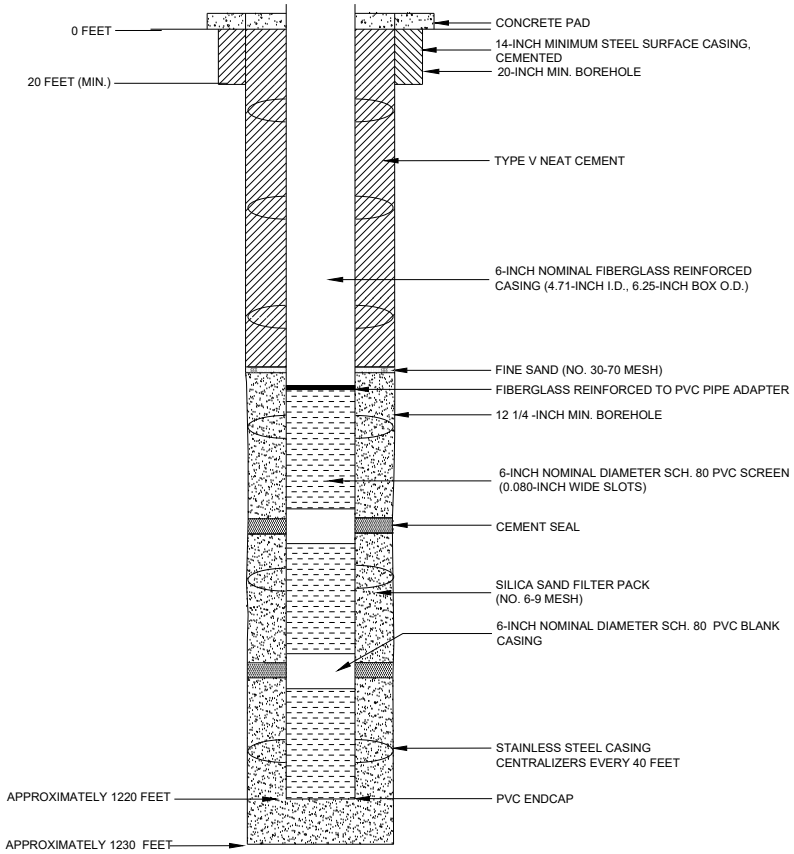

PROPOSED PLUGGING AND
ABANDONMENT
INJECTION AND RECOVERY WELL

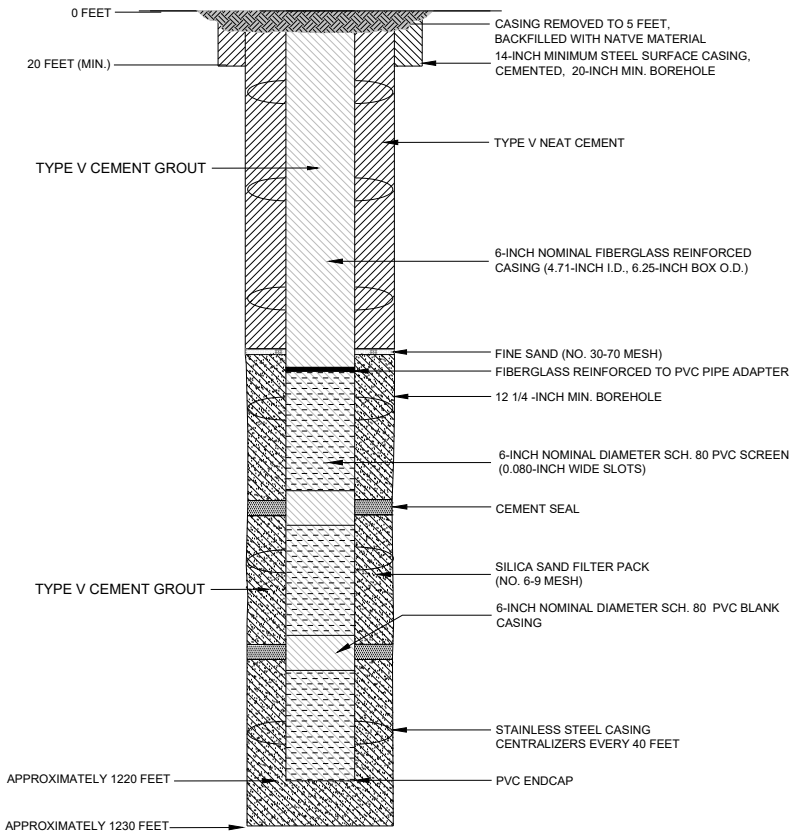

NOTES

1. WELL DESIGN DETAILS ARE BASED ON CORE HOLE AND WELL LOG RECORDS.

HALEY ALDRICH

FLORENCE COPPER, INC.
FLORENCE, ARIZONA

ABANDONMENT SCHEMATIC
RESOURCE BLOCK 61
TYPICAL INJECTION AND
RECOVERY WELL

SCALE: AS SHOWN
JULY 2019

FIGURE E-28a

Saved by: MNICHOLLS Printed: 7/25/2019 7:20 PM Sheet: HA-FIG-A-L(2)
\\HALEYALDRICH.COM\SHARE\PHX_COMMON\PROJECTS\FLORENCE COPPER\132473 FLORENCE GROUNDWATER PERMITTING\CAD\132473_000-OBSERVATION_WELL_CONSTRUCTION DIAGRAM.DWG

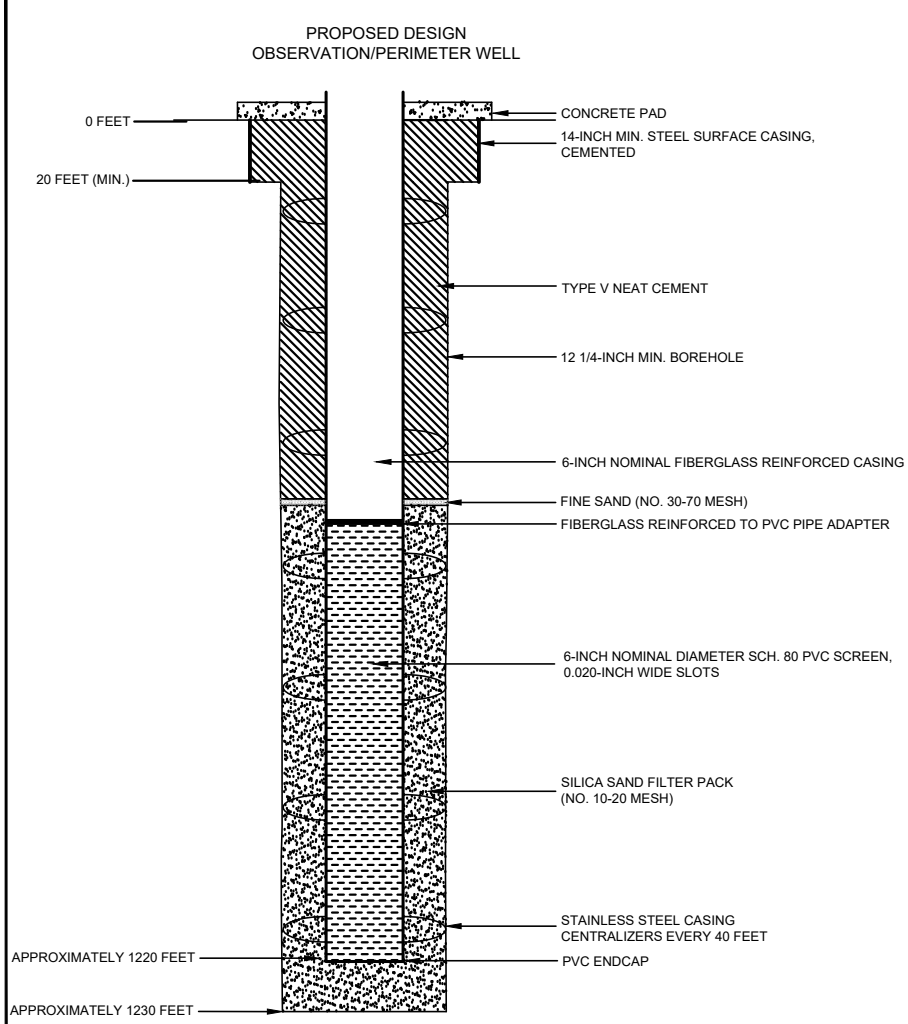

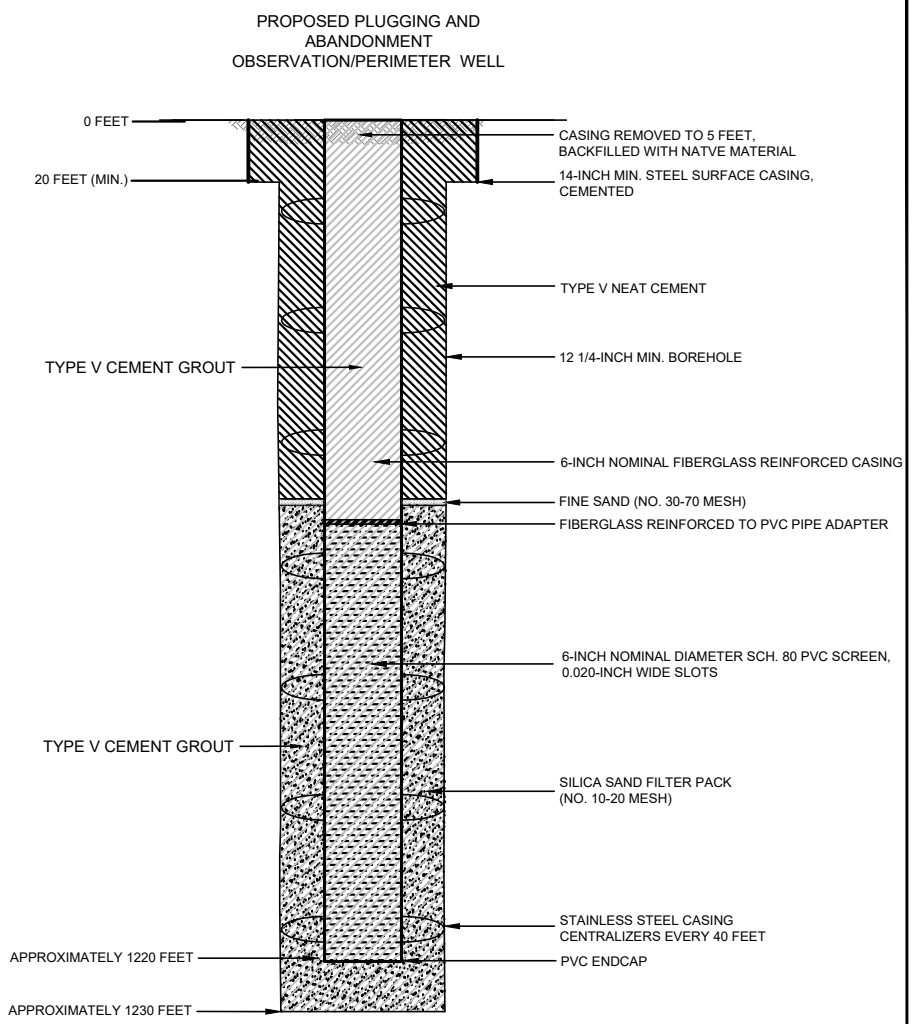

NOTES

1. WELL DESIGN DETAILS ARE BASED ON CORE HOLE AND WELL LOG RECORDS.

HALEY ALDRICH

FLORENCE COPPER, INC.
FLORENCE, ARIZONA

ABANDONMENT SCHEMATIC
RESOURCE BLOCK 61
OBSERVATION/PERIMETER WELL

JULY 2019
SCALE: AS SHOWN

FIGURE E-28b

TABLE E-28
WELLS WITHIN RESOURCE BLOCK 61
FLORENCE COPPER PROJECT
FLORENCE, ARIZONA

Well Number	Easting	Northing	Resource Block	Depth to Top of Bedrock (ft bgs)	Depth to Top of Injection Zone (ft bgs)	Depth to Bottom of Injection Zone (ft bgs)
2220	847199	745423	61	485	525	1220
2221	847269	745493	61	485	525	1220
2222	847340	745564	61	485	525	1220
2224	847269	745564	61	485	525	1220
2225	847199	745493	61	485	525	1220
2276	847199	745564	61	485	525	1220
2277	847270	745620	61	485	525	1220
2280	847174	745676	61	485	525	1220
2281	847199	745635	61	485	525	1220
O37	847057	745352	61	485	525	1220
O38	847057	745635	61	485	525	1220
O39	847057	745776	61	485	525	1220
P73	847128	745423	61	485	525	1220
P74	847128	745564	61	485	525	1220
P75	847104	745676	61	485	525	1220
P77	846988	745848	61	485	525	1220

Notes:

ft bgs = feet below ground surface

OMB No. 2040-0042 Approval Expires 4/30/2022

United States Environmental Protection Agency

WELL REWORK RECORD, PLUGGING AND ABANDONMENT PLAN, OR PLUGGING AND ABANDONMENT AFFIDAVIT

Name and Address, Phone Number and/or Email of Permittee

Florence Copper Project
1575 W Hunt Hwy,
Florence, AZ 85132

Permit or EPA ID Number	API Number	Full Well Name
R9UIC-AZ3-FY11-1		Block 62 Wells - See Attached Table E-29

State	County
Arizona	Pinal

Locate well in two directions from nearest lines of quarter section and drilling unit

Surface Location

SE 1/4 of SW 1/4 of Section 28 Township 4S Range 9E

____ ft. from (N/S) ____ Line of quarter section

____ ft. from (E/W) ____ Line of quarter section.

Latitude 33.048592

Longitude -111.434611

See Attached Table for Individual Well Coordinates.

Well Class	Timing of Action (pick one)	Type of Action (pick one)
☐ Class I ☐ Class II ☑ Class III ☐ Class V	☑ Notice Prior to Work Date Expected to Commence January 2027 ☐ Report After Work Date Work Ended	☐ Well Rework ☑ Plugging and Abandonment ☐ Conversion to a Non-Injection Well

Provide a narrative description of the work planned to be performed, or that was performed. Use additional pages as necessary. See instructions.

This plugging and abandonment applies to wells Class III wells to be constructed in block 62. There are 51 Class III multi-use injection/ recovery wells, planned for construction in this block. The injection and recovery wells will be of uniform design, and will be used for injection and recovery on an alternate basis. Some of the injection and recovery wells will be used as perimeter and observation wells prior to well field build-out.

The work performed includes plugging and abandonment of the Class III wells in resource block 62. Plugging and abandonment will be accomplished following procedures defined in Attachment E of the application. Plugging and abandonment details are shown on the attached Figure E-29.

Certification

I certify under the penalty of law that I have personally examined and am familiar with the information submitted in this document and all attachments and that, based on my inquiry of those individuals immediately responsible for obtaining the information, I believe that the information is true, accurate, and complete. I am aware that there are significant penalties for submitting false information, including the possibliity of fine and imprisonment. (Ref. 40 CFR § 144.32)

Name and Official Title *(Please type or print)*	Signature	Date Signed
Dan Johnson, VP - General Manager		10/3/2019

INSTRUCTIONS FOR FORM 7520-19

This form replaces forms 7520-12 and 7520-14. Use this form only when work is planned or has occurred that affects the well's construction or operation as an injection well, including work on the casing, tubing or packer (or for shallow Class V wells, the subsurface fluid emplacement network). Use one form per injection well. While reports or other information developed by contractors or service companies may be attached, this form must be signed by a responsible entity as described at 40 CFR 144.32. Note: operators closing Class V wells should use Form 7520-17.

NAME, ADDRESS, PHONE AND/OR EMAIL OF PERMITTEE: Enter the name and street address, city/town, state, and ZIP code of the permittee. Also provide an email address (if available) and/or a phone number.

PERMIT OR EPA ID NUMBER: Enter the well identification number or permit number assigned to the well by the EPA or the permitting authority.

API NUMBER: Enter the number assigned by the local jurisdiction (usually a State Oil and Gas Agency) using the American Petroleum Institute standard numbering system.

FULL WELL NAME: Enter the full name of the well or project.

Enter the **STATE** and **COUNTY** where the well is located. For States that do not have counties, use the name of that State's equivalent jurisdiction at a more local level.

WELL LOCATION: Fill in the complete township, range, and section to the nearest quarter-quarter section. A township is north or south of the baseline, and a range is east or west of the principal meridian (e.g., T12N, R34W). Also include the distance, in feet, from the nearest north or south line and nearest east or west line of the quarter-section. Also, enter the **latitude** and **longitude** of the well in decimal degrees, to five or six places if possible; be sure to include a negative sign for the longitude of a well in the Western Hemisphere and a negative sign for the latitude of a well in the Southern Hemisphere.

Enter the **WELL CLASS,** i.e., the class of injection well as defined in 40 CFR 144.6.

TIMING OF THE ACTION: Check ***Notice prior to work*** if the activity has not yet occurred (i.e., is planned). Check ***Report after work*** if the activity described has already occurred. As appropriate, include the date the activity is expected to start or the date the activity was completed. (Note this may not be available, e.g., for a plugging plan submitted with a permit application.)

TYPE OF ACTION: Check the appropriate box to describe the kind of activity being reported. Check ***Well Rework*** for work that was/will be performed on the well after it has already been in operation as an injection well. Check ***Plugging and Abandonment*** to report on plans for or descriptions of final closure/plugging after use as an injection well. Check ***Conversion to a Non-Injection Well*** if the well is to be converted to something other than an injection well.

Provide a **NARRATIVE DESCRIPTION** of the work planned to be performed, or that was performed. The narrative should include a description of the main procedures planned or that occurred during the work activity. A service company report, daily report, or similar document may be attached if it includes all the requested information and is clear and legible.

For well reworks, include the following information: The reason for the well rework; depths of activity; type of activity; changes to injection well configuration, well casing, or cement behind casing; any plug added to the well and its depth; any newly drilled interval and its depth; method(s) to demonstrate that the well has mechanical integrity (as applicable); and any deviations from the approved rework plan (as applicable).

For a well plugging plan, include the following information: Reason for the well plugging; number of plugs placed, and their depths; materials used as plugs (e.g., cast iron bridge plug, cement, cement retainer); method to set plugs; and wait-on-cement times, if any. Also provide one or more cost estimates from an independent firm in the business of plugging and abandoning wells to plug the well as described in the plan.

For well plugging affidavit, include the following information: Reason for the well plugging; number of plugs placed, and their depths; materials used as plugs (e.g., cast iron bridge plug, cement, cement retainer); method to set plugs; wait-on-cement times, if any; and any deviations from the approved plugging plan (if applicable).

For conversion to a non-injection well, include the following information: Depths of activity; type of activity; changes to injection well configuration, well casing, or cement behind casing; any plug added to the well and its depth; any newly drilled interval and its depth; depths of new perforations; and method(s) to demonstrate that the well has mechanical integrity (as applicable).

For all of the above activities, include a well sketch depicting the work, results of well tests/logging performed, service company tickets, and any other available information demonstrating how the work was/is to be performed. Also, specify whether depths are below ground surface, relative to Kelly bushing, etc.

CERTIFICATION: This form must be signed and dated by either: a responsible corporate officer for a corporation, by a general partner for a partnership, by the proprietor of a sole proprietorship, or by a principal executive or ranking elected official for a public agency.

PAPERWORK REDUCTION ACT NOTICE: The public reporting and recordkeeping burden for this collection of information is estimated to average between 6.0 and 7.9 hours per response, depending on the injection well class. Burden means the total time, effort, or financial resource expended by persons to generate, maintain, retain, or disclose or provide information to or for a Federal Agency. This includes the time needed to review instructions; develop, acquire, install, and utilize technology and systems for the purposes of collecting, validating, and verifying information, processing and maintaining information, and disclosing and providing information; adjust the existing ways to comply with any previously applicable instructions and requirements; train personnel to be able to respond to the collection of information; search data sources; complete and review the collection of information; and, transmit or otherwise disclose the information. An agency may not conduct or sponsor, and a person is not required to respond to, a collection of information unless it displays a currently valid OMB control number. Send comments on the Agency's need for this information, the accuracy of the provided burden estimates, and any suggested methods for minimizing respondent burden, including the use of automated collection techniques to Director, Collection Strategies Division, U.S. Environmental Protection Agency (2822), 1200 Pennsylvania Ave., NW., Washington, D.C. 20460. Include the OMB control number in any correspondence. Do not send the completed forms to this address.

PROPOSED DESIGN
INJECTION AND RECOVERY WELL

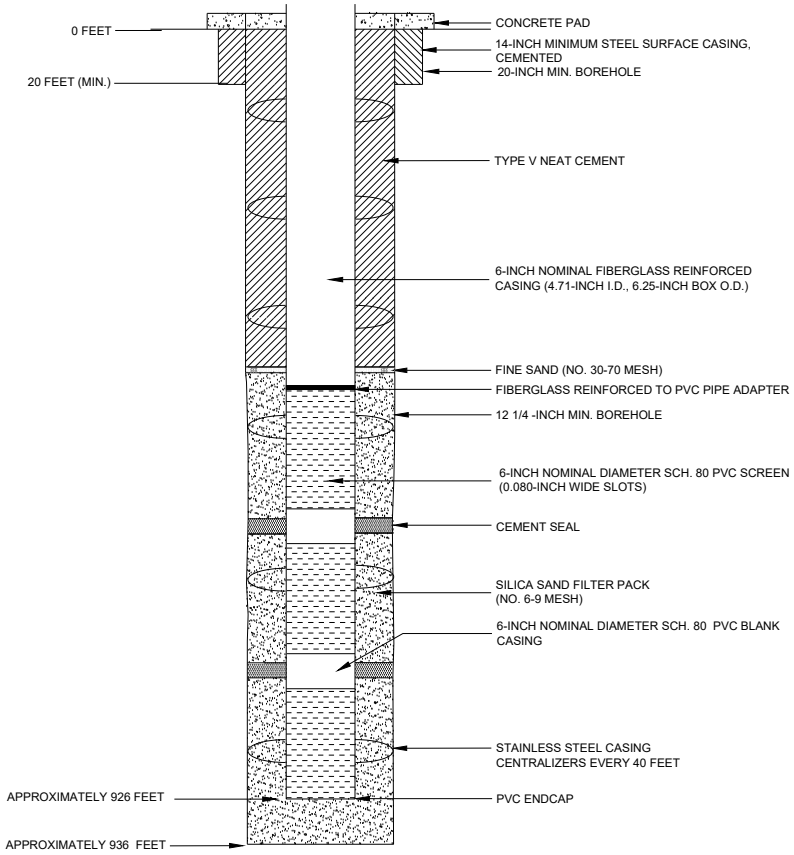

PROPOSED PLUGGING AND
ABANDONMENT
INJECTION AND RECOVERY WELL

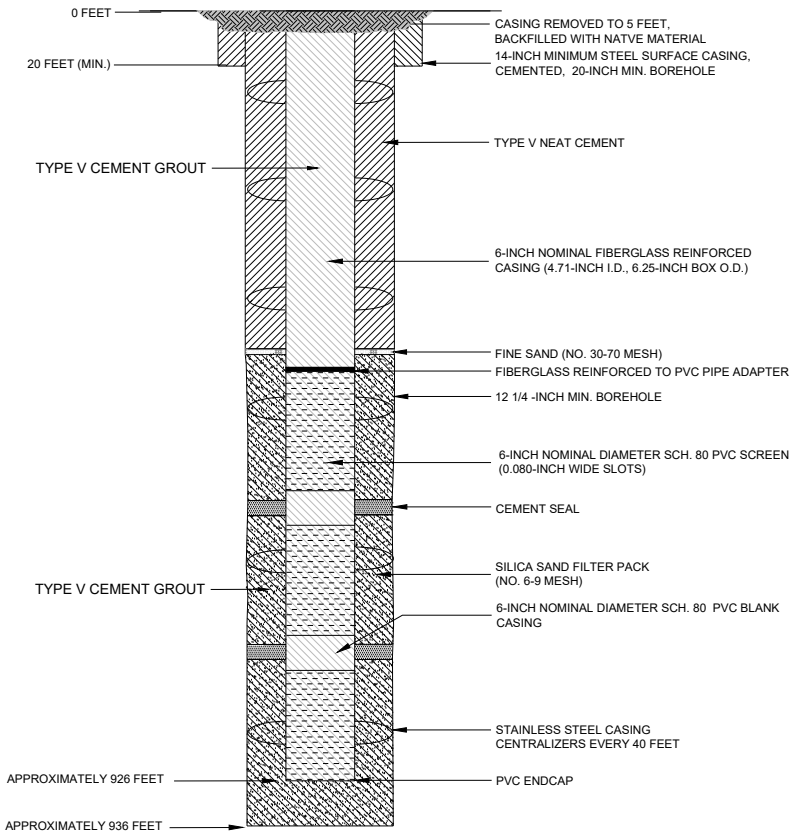

NOTES

1. WELL DESIGN DETAILS ARE BASED ON CORE HOLE AND WELL LOG RECORDS.

HALEY ALDRICH

FLORENCE COPPER, INC.
FLORENCE, ARIZONA

ABANDONMENT SCHEMATIC
RESOURCE BLOCK 62
TYPICAL INJECTION AND
RECOVERY WELL

SCALE: AS SHOWN
JULY 2019

FIGURE E-29

TABLE E-29
WELLS WITHIN RESOURCE BLOCK 62
FLORENCE COPPER PROJECT
FLORENCE, ARIZONA

Well Number	Easting	Northing	Resource Block	Depth to Top of Bedrock (ft bgs)	Depth to Top of Injection Zone (ft bgs)	Depth to Bottom of Injection Zone (ft bgs)
2030	847695	745283	62	358	398	926
2099	847552	745705	62	358	398	926
2100	847623	745635	62	358	398	926
2101	847624	745705	62	358	398	926
2102	847623	745776	62	358	398	926
2103	847976	745635	62	358	398	926
2104	847906	745564	62	358	398	926
2105	847835	745493	62	358	398	926
2106	847764	745564	62	358	398	926
2107	847835	745635	62	358	398	926
2108	847906	745705	62	358	398	926
2110	847906	745635	62	358	398	926
2111	847835	745564	62	358	398	926
2112	847764	745493	62	358	398	926
2113	847694	745635	62	358	398	926
2114	847764	745705	62	358	398	926
2115	847835	745776	62	358	398	926
2117	847835	745705	62	358	398	926
2118	847764	745635	62	358	398	926
2119	847694	745564	62	358	398	926
2120	847694	745776	62	358	398	926
2121	847764	745847	62	358	398	926
2122	847764	745776	62	358	398	926
2123	847694	745705	62	358	398	926
2133	848047	745564	62	358	398	926
2139	847835	745423	62	358	398	926
2140	847906	745493	62	358	398	926
2141	847976	745564	62	358	398	926
2143	847906	745423	62	358	398	926
2144	847976	745493	62	358	398	926
2207	847552	745564	62	358	398	926
2208	847552	745635	62	358	398	926
2209	847481	745581	62	358	398	926
2210	847481	745635	62	358	398	926
2211	847577	745523	62	358	398	926
2212	847623	745493	62	358	398	926
2213	847623	745564	62	358	398	926
2214	847764	745423	62	358	398	926
2215	847694	745493	62	358	398	926

TABLE E-29
WELLS WITHIN RESOURCE BLOCK 62
FLORENCE COPPER PROJECT
FLORENCE, ARIZONA

Well Number	Easting	Northing	Resource Block	Depth to Top of Bedrock (ft bgs)	Depth to Top of Injection Zone (ft bgs)	Depth to Bottom of Injection Zone (ft bgs)
2216	847693	745445	62	358	398	926
2217	847835	745352	62	358	398	926
2218	847473	745482	62	358	398	926
2223	847411	745527	62	358	398	926
2266	847764	745390	62	358	398	926
2237	847508	745455	62	358	398	926
2236	847693	745332	62	358	398	926
2235	847764	745281	62	358	398	926
452	847695	745848	62	358	398	926
2227	847552	745423	62	358	398	926
2229	847600	745396	62	358	398	926
2233	847623	745352	62	358	398	926

Notes:

ft bgs = feet below ground surface

OMB No. 2040-0042 Approval Expires 4/30/2022

United States Environmental Protection Agency

WELL REWORK RECORD, PLUGGING AND ABANDONMENT PLAN, OR PLUGGING AND ABANDONMENT AFFIDAVIT

Name and Address, Phone Number and/or Email of Permittee

Florence Copper Project
1575 W Hunt Hwy,
Florence, AZ 85132

Permit or EPA ID Number	API Number	Full Well Name
R9UIC-AZ3-FY11-1		Block 63 Wells - See Attached Table E-30

State	County
Arizona	Pinal

Locate well in two directions from nearest lines of quarter section and drilling unit

Surface Location

SE 1/4 of SW 1/4 of Section 28 Township 4S Range 9E

____ ft. from (N/S) ____ Line of quarter section

____ ft. from (E/W) ____ Line of quarter section.

Latitude 33.048583

Longitude -111.432288

See Attached Table for Individual Well Coordinates.

Well Class	Timing of Action (pick one)	Type of Action (pick one)
☐ Class I ☐ Class II ☑ Class III ☐ Class V	☑ Notice Prior to Work Date Expected to Commence January 2027 ☐ Report After Work Date Work Ended	☐ Well Rework ☑ Plugging and Abandonment ☐ Conversion to a Non-Injection Well

Provide a narrative description of the work planned to be performed, or that was performed. Use additional pages as necessary. See instructions.

This plugging and abandonment applies to wells Class III wells to be constructed in block 63. There are 51 Class III multi-use injection/ recovery wells, planned for construction in this block. The injection and recovery wells will be of uniform design, and will be used for injection and recovery on an alternate basis. Some of the injection and recovery wells will be used as perimeter and observation wells prior to well field build-out.

The work performed includes plugging and abandonment of the Class III wells in resource block 63. Plugging and abandonment will be accomplished following procedures defined in Attachment E of the application. Plugging and abandonment details are shown on the attached Figure E-30.

Certification

I certify under the penalty of law that I have personally examined and am familiar with the information submitted in this document and all attachments and that, based on my inquiry of those individuals immediately responsible for obtaining the information, I believe that the information is true, accurate, and complete. I am aware that there are significant penalties for submitting false information, including the possibliity of fine and imprisonment. (Ref. 40 CFR § 144.32)

Name and Official Title *(Please type or print)*	Signature	Date Signed
Dan Johnson, VP - General Manager		10/3/2019

INSTRUCTIONS FOR FORM 7520-19

This form replaces forms 7520-12 and 7520-14. Use this form only when work is planned or has occurred that affects the well's construction or operation as an injection well, including work on the casing, tubing or packer (or for shallow Class V wells, the subsurface fluid emplacement network). Use one form per injection well. While reports or other information developed by contractors or service companies may be attached, this form must be signed by a responsible entity as described at 40 CFR 144.32. Note: operators closing Class V wells should use Form 7520-17.

NAME, ADDRESS, PHONE AND/OR EMAIL OF PERMITTEE: Enter the name and street address, city/town, state, and ZIP code of the permittee. Also provide an email address (if available) and/or a phone number.

PERMIT OR EPA ID NUMBER: Enter the well identification number or permit number assigned to the well by the EPA or the permitting authority.

API NUMBER: Enter the number assigned by the local jurisdiction (usually a State Oil and Gas Agency) using the American Petroleum Institute standard numbering system.

FULL WELL NAME: Enter the full name of the well or project.

Enter the **STATE** and **COUNTY** where the well is located. For States that do not have counties, use the name of that State's equivalent jurisdiction at a more local level.

WELL LOCATION: Fill in the complete township, range, and section to the nearest quarter-quarter section. A township is north or south of the baseline, and a range is east or west of the principal meridian (e.g., T12N, R34W). Also include the distance, in feet, from the nearest north or south line and nearest east or west line of the quarter-section. Also, enter the **latitude** and **longitude** of the well in decimal degrees, to five or six places if possible; be sure to include a negative sign for the longitude of a well in the Western Hemisphere and a negative sign for the latitude of a well in the Southern Hemisphere.

Enter the **WELL CLASS,** i.e., the class of injection well as defined in 40 CFR 144.6.

TIMING OF THE ACTION: Check ***Notice prior to work*** if the activity has not yet occurred (i.e., is planned). Check ***Report after work*** if the activity described has already occurred. As appropriate, include the date the activity is expected to start or the date the activity was completed. (Note this may not be available, e.g., for a plugging plan submitted with a permit application.)

TYPE OF ACTION: Check the appropriate box to describe the kind of activity being reported. Check ***Well Rework*** for work that was/will be performed on the well after it has already been in operation as an injection well. Check ***Plugging and Abandonment*** to report on plans for or descriptions of final closure/plugging after use as an injection well. Check ***Conversion to a Non-Injection Well*** if the well is to be converted to something other than an injection well.

Provide a **NARRATIVE DESCRIPTION** of the work planned to be performed, or that was performed. The narrative should include a description of the main procedures planned or that occurred during the work activity. A service company report, daily report, or similar document may be attached if it includes all the requested information and is clear and legible.

For well reworks, include the following information: The reason for the well rework; depths of activity; type of activity; changes to injection well configuration, well casing, or cement behind casing; any plug added to the well and its depth; any newly drilled interval and its depth; method(s) to demonstrate that the well has mechanical integrity (as applicable); and any deviations from the approved rework plan (as applicable).

For a well plugging plan, include the following information: Reason for the well plugging; number of plugs placed, and their depths; materials used as plugs (e.g., cast iron bridge plug, cement, cement retainer); method to set plugs; and wait-on-cement times, if any. Also provide one or more cost estimates from an independent firm in the business of plugging and abandoning wells to plug the well as described in the plan.

For well plugging affidavit, include the following information: Reason for the well plugging; number of plugs placed, and their depths; materials used as plugs (e.g., cast iron bridge plug, cement, cement retainer); method to set plugs; wait-on-cement times, if any; and any deviations from the approved plugging plan (if applicable).

For conversion to a non-injection well, include the following information: Depths of activity; type of activity; changes to injection well configuration, well casing, or cement behind casing; any plug added to the well and its depth; any newly drilled interval and its depth; depths of new perforations; and method(s) to demonstrate that the well has mechanical integrity (as applicable).

For all of the above activities, include a well sketch depicting the work, results of well tests/logging performed, service company tickets, and any other available information demonstrating how the work was/is to be performed. Also, specify whether depths are below ground surface, relative to Kelly bushing, etc.

CERTIFICATION: This form must be signed and dated by either: a responsible corporate officer for a corporation, by a general partner for a partnership, by the proprietor of a sole proprietorship, or by a principal executive or ranking elected official for a public agency.

PAPERWORK REDUCTION ACT NOTICE: The public reporting and recordkeeping burden for this collection of information is estimated to average between 6.0 and 7.9 hours per response, depending on the injection well class. Burden means the total time, effort, or financial resource expended by persons to generate, maintain, retain, or disclose or provide information to or for a Federal Agency. This includes the time needed to review instructions; develop, acquire, install, and utilize technology and systems for the purposes of collecting, validating, and verifying information, processing and maintaining information, and disclosing and providing information; adjust the existing ways to comply with any previously applicable instructions and requirements; train personnel to be able to respond to the collection of information; search data sources; complete and review the collection of information; and, transmit or otherwise disclose the information. An agency may not conduct or sponsor, and a person is not required to respond to, a collection of information unless it displays a currently valid OMB control number. Send comments on the Agency's need for this information, the accuracy of the provided burden estimates, and any suggested methods for minimizing respondent burden, including the use of automated collection techniques to Director, Collection Strategies Division, U.S. Environmental Protection Agency (2822), 1200 Pennsylvania Ave., NW., Washington, D.C. 20460. Include the OMB control number in any correspondence. Do not send the completed forms to this address.

PROPOSED DESIGN
INJECTION AND RECOVERY WELL

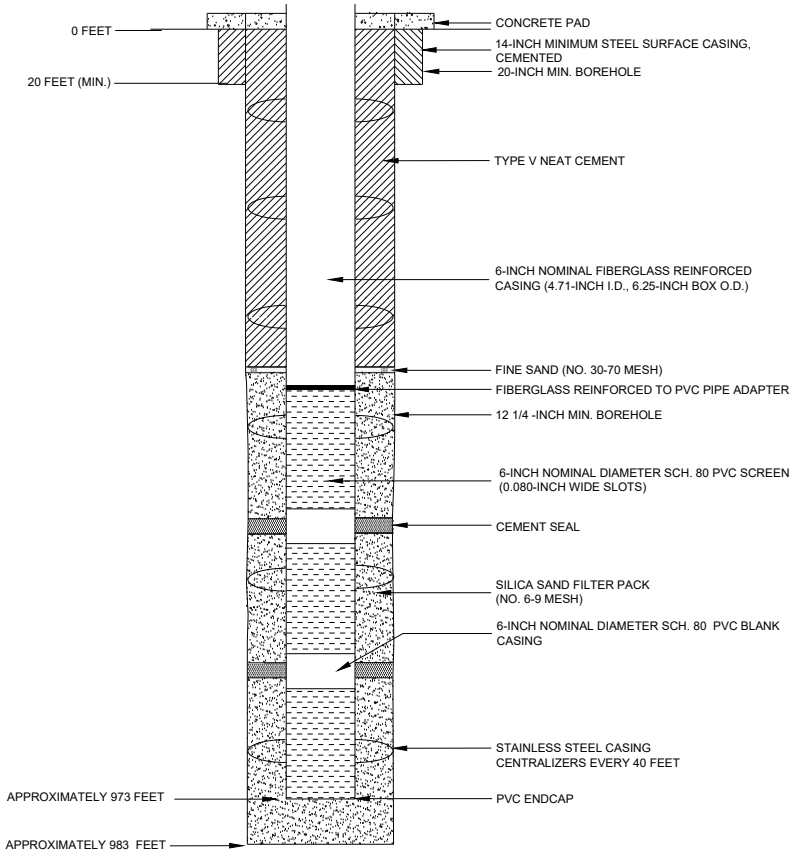

PROPOSED PLUGGING AND
ABANDONMENT
INJECTION AND RECOVERY WELL

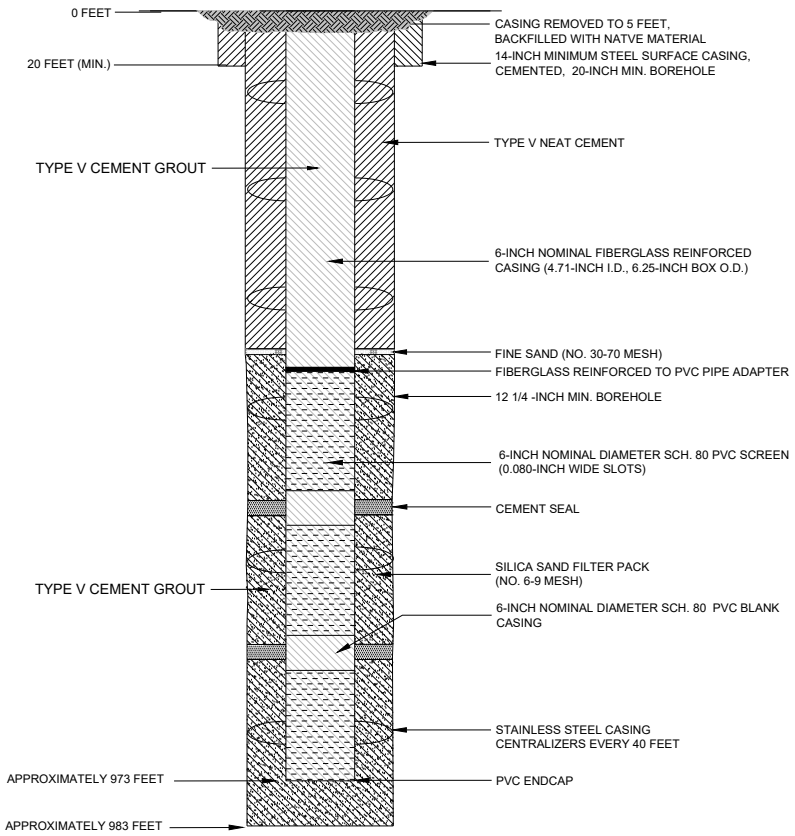

NOTES

1. WELL DESIGN DETAILS ARE BASED ON CORE HOLE AND WELL LOG RECORDS.

HALEY ALDRICH

FLORENCE COPPER, INC.
FLORENCE, ARIZONA

ABANDONMENT SCHEMATIC
RESOURCE BLOCK 63
TYPICAL INJECTION AND
RECOVERY WELL

SCALE: AS SHOWN
JULY 2019

FIGURE E-30

TABLE E-30
WELLS WITHIN RESOURCE BLOCK 63
FLORENCE COPPER PROJECT
FLORENCE, ARIZONA

Well Number	Easting	Northing	Resource Block	Depth to Top of Bedrock (ft bgs)	Depth to Top of Injection Zone (ft bgs)	Depth to Bottom of Injection Zone (ft bgs)
464	848401.6491	745848.4602	63	353	393	973
1635	848543.0287	745424.2398	63	353	393	973
1636	848613.7394	745494.9505	63	353	393	973
1637	848684.4501	745565.6612	63	353	393	973
1638	848613.7394	745424.2505	63	353	393	973
1639	848684.4501	745494.9612	63	353	393	973
1641	848755.1714	745565.6826	63	353	393	973
1646	848472.3074	745282.8185	63	353	393	973
1647	848472.3074	745353.5185	63	353	393	973
1648	848401.5967	745282.8078	63	353	393	973
1652	848543.018	745353.5292	63	353	393	973
2037	848260.2064	745388.8383	63	353	393	973
2044	848330.8957	745353.5068	63	353	393	973
2145	848259.1608	745493.4174	63	353	393	973
2146	848329.8714	745564.1281	63	353	393	973
2147	848400.5821	745634.8388	63	353	393	973
2148	848471.2928	745705.5494	63	353	393	973
2149	848542.0035	745776.2601	63	353	393	973
2150	848520.449	745705.5494	63	353	393	973
2151	848471.2821	745634.8388	63	353	393	973
2152	848400.5714	745564.1281	63	353	393	973
2153	848329.8608	745520.0354	63	353	393	973
2154	848188.4608	745564.1174	63	353	393	973
2155	848259.1714	745634.8281	63	353	393	973
2156	848329.8821	745705.5388	63	353	393	973
2157	848400.5928	745776.2494	63	353	393	973
2158	848471.3035	745846.9601	63	353	393	973
2159	848471.2928	745776.2494	63	353	393	973
2160	848400.5821	745705.5388	63	353	393	973
2161	848329.8714	745634.8281	63	353	393	973
2162	848259.1608	745564.1174	63	353	393	973
2163	848188.4501	745493.4067	63	353	393	973
2164	848329.8821	745776.2388	63	353	393	973
2165	848259.1714	745705.5281	63	353	393	973
2166	848188.4608	745634.8174	63	353	393	973
2167	848117.7501	745564.1067	63	353	393	973
2168	848188.4501	745444.3655	63	353	393	973
2177	848683.4035	745634.8601	63	353	393	973
2178	848612.6928	745564.1494	63	353	393	973

TABLE E-30
WELLS WITHIN RESOURCE BLOCK 63
FLORENCE COPPER PROJECT
FLORENCE, ARIZONA

Well Number	Easting	Northing	Resource Block	Depth to Top of Bedrock (ft bgs)	Depth to Top of Injection Zone (ft bgs)	Depth to Bottom of Injection Zone (ft bgs)
2179	848541.9821	745493.4388	63	353	393	973
2180	848471.2714	745422.7281	63	353	393	973
2181	848329.8608	745422.7174	63	353	393	973
2182	848400.5714	745466.6131	63	353	393	973
2183	848503.1242	745531.5875	63	353	393	973
2184	848568.9288	745610.9406	63	353	393	973
2185	848622.826	745705.5601	63	353	393	973
2187	848612.6928	745634.8494	63	353	393	973
2188	848541.9821	745564.1388	63	353	393	973
2189	848471.2714	745493.4281	63	353	393	973
2190	848400.5608	745422.7174	63	353	393	973
2198	848400.5501	745352.0067	63	353	393	973

Notes:

ft bgs = feet below ground surface

OMB No. 2040-0042 Approval Expires 4/30/2022

United States Environmental Protection Agency

WELL REWORK RECORD, PLUGGING AND ABANDONMENT PLAN, OR PLUGGING AND ABANDONMENT AFFIDAVIT

Name and Address, Phone Number and/or Email of Permittee

Florence Copper Project
1575 W Hunt Hwy,
Florence, AZ 85132

Permit or EPA ID Number	API Number	Full Well Name
R9UIC-AZ3-FY11-1		Block 64 Wells - See Attached Table E-31

State	County
Arizona	Pinal

Locate well in two directions from nearest lines of quarter section and drilling unit

Surface Location

SW 1/4 of SE 1/4 of Section 28 Township 4S Range 9E

____ ft. from (N/S) ____ Line of quarter section

____ ft. from (E/W) ____ Line of quarter section.

Latitude 33.048598

Longitude -111.430035

See Attached Table for Individual Well Coordinates.

Well Class	Timing of Action (pick one)	Type of Action (pick one)
☐ Class I ☐ Class II ☑ Class III ☐ Class V	☑ Notice Prior to Work Date Expected to Commence January 2027 ☐ Report After Work Date Work Ended	☐ Well Rework ☑ Plugging and Abandonment ☐ Conversion to a Non-Injection Well

Provide a narrative description of the work planned to be performed, or that was performed. Use additional pages as necessary. See instructions.

This plugging and abandonment applies to wells Class III wells to be constructed in block 64. There are 51 Class III multi-use injection/ recovery wells, planned for construction in this block. The injection and recovery wells will be of uniform design, and will be used for injection and recovery on an alternate basis. Some of the injection and recovery wells will be used as perimeter and observation wells prior to well field build-out.

The work performed includes plugging and abandonment of the Class III wells in resource block 64. Plugging and abandonment will be accomplished following procedures defined in Attachment E of the application. Plugging and abandonment details are shown on the attached Figure E-31.

Certification

I certify under the penalty of law that I have personally examined and am familiar with the information submitted in this document and all attachments and that, based on my inquiry of those individuals immediately responsible for obtaining the information, I believe that the information is true, accurate, and complete. I am aware that there are significant penalties for submitting false information, including the possibliity of fine and imprisonment. (Ref. 40 CFR § 144.32)

Name and Official Title *(Please type or print)*	Signature	Date Signed
Dan Johnson, VP - General Manager		10/3/2019

INSTRUCTIONS FOR FORM 7520-19

This form replaces forms 7520-12 and 7520-14. Use this form only when work is planned or has occurred that affects the well's construction or operation as an injection well, including work on the casing, tubing or packer (or for shallow Class V wells, the subsurface fluid emplacement network). Use one form per injection well. While reports or other information developed by contractors or service companies may be attached, this form must be signed by a responsible entity as described at 40 CFR 144.32. Note: operators closing Class V wells should use Form 7520-17.

NAME, ADDRESS, PHONE AND/OR EMAIL OF PERMITTEE: Enter the name and street address, city/town, state, and ZIP code of the permittee. Also provide an email address (if available) and/or a phone number.

PERMIT OR EPA ID NUMBER: Enter the well identification number or permit number assigned to the well by the EPA or the permitting authority.

API NUMBER: Enter the number assigned by the local jurisdiction (usually a State Oil and Gas Agency) using the American Petroleum Institute standard numbering system.

FULL WELL NAME: Enter the full name of the well or project.

Enter the **STATE** and **COUNTY** where the well is located. For States that do not have counties, use the name of that State's equivalent jurisdiction at a more local level.

WELL LOCATION: Fill in the complete township, range, and section to the nearest quarter-quarter section. A township is north or south of the baseline, and a range is east or west of the principal meridian (e.g., T12N, R34W). Also include the distance, in feet, from the nearest north or south line and nearest east or west line of the quarter-section. Also, enter the **latitude** and **longitude** of the well in decimal degrees, to five or six places if possible; be sure to include a negative sign for the longitude of a well in the Western Hemisphere and a negative sign for the latitude of a well in the Southern Hemisphere.

Enter the **WELL CLASS,** i.e., the class of injection well as defined in 40 CFR 144.6.

TIMING OF THE ACTION: Check ***Notice prior to work*** if the activity has not yet occurred (i.e., is planned). Check ***Report after work*** if the activity described has already occurred. As appropriate, include the date the activity is expected to start or the date the activity was completed. (Note this may not be available, e.g., for a plugging plan submitted with a permit application.)

TYPE OF ACTION: Check the appropriate box to describe the kind of activity being reported. Check ***Well Rework*** for work that was/will be performed on the well after it has already been in operation as an injection well. Check ***Plugging and Abandonment*** to report on plans for or descriptions of final closure/plugging after use as an injection well. Check ***Conversion to a Non-Injection Well*** if the well is to be converted to something other than an injection well.

Provide a **NARRATIVE DESCRIPTION** of the work planned to be performed, or that was performed. The narrative should include a description of the main procedures planned or that occurred during the work activity. A service company report, daily report, or similar document may be attached if it includes all the requested information and is clear and legible.

For well reworks, include the following information: The reason for the well rework; depths of activity; type of activity; changes to injection well configuration, well casing, or cement behind casing; any plug added to the well and its depth; any newly drilled interval and its depth; method(s) to demonstrate that the well has mechanical integrity (as applicable); and any deviations from the approved rework plan (as applicable).

For a well plugging plan, include the following information: Reason for the well plugging; number of plugs placed, and their depths; materials used as plugs (e.g., cast iron bridge plug, cement, cement retainer); method to set plugs; and wait-on-cement times, if any. Also provide one or more cost estimates from an independent firm in the business of plugging and abandoning wells to plug the well as described in the plan.

For well plugging affidavit, include the following information: Reason for the well plugging; number of plugs placed, and their depths; materials used as plugs (e.g., cast iron bridge plug, cement, cement retainer); method to set plugs; wait-on-cement times, if any; and any deviations from the approved plugging plan (if applicable).

For conversion to a non-injection well, include the following information: Depths of activity; type of activity; changes to injection well configuration, well casing, or cement behind casing; any plug added to the well and its depth; any newly drilled interval and its depth; depths of new perforations; and method(s) to demonstrate that the well has mechanical integrity (as applicable).

For all of the above activities, include a well sketch depicting the work, results of well tests/logging performed, service company tickets, and any other available information demonstrating how the work was/is to be performed. Also, specify whether depths are below ground surface, relative to Kelly bushing, etc.

CERTIFICATION: This form must be signed and dated by either: a responsible corporate officer for a corporation, by a general partner for a partnership, by the proprietor of a sole proprietorship, or by a principal executive or ranking elected official for a public agency.

PAPERWORK REDUCTION ACT NOTICE: The public reporting and recordkeeping burden for this collection of information is estimated to average between 6.0 and 7.9 hours per response, depending on the injection well class. Burden means the total time, effort, or financial resource expended by persons to generate, maintain, retain, or disclose or provide information to or for a Federal Agency. This includes the time needed to review instructions; develop, acquire, install, and utilize technology and systems for the purposes of collecting, validating, and verifying information, processing and maintaining information, and disclosing and providing information; adjust the existing ways to comply with any previously applicable instructions and requirements; train personnel to be able to respond to the collection of information; search data sources; complete and review the collection of information; and, transmit or otherwise disclose the information. An agency may not conduct or sponsor, and a person is not required to respond to, a collection of information unless it displays a currently valid OMB control number. Send comments on the Agency's need for this information, the accuracy of the provided burden estimates, and any suggested methods for minimizing respondent burden, including the use of automated collection techniques to Director, Collection Strategies Division, U.S. Environmental Protection Agency (2822), 1200 Pennsylvania Ave., NW., Washington, D.C. 20460. Include the OMB control number in any correspondence. Do not send the completed forms to this address.

PROPOSED DESIGN
INJECTION AND RECOVERY WELL

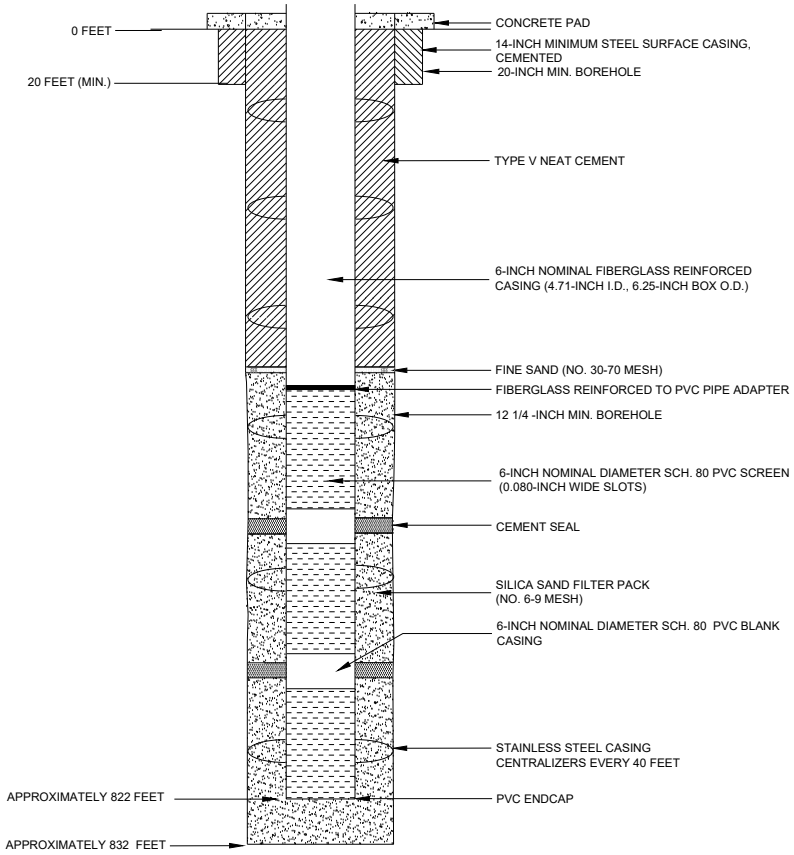

PROPOSED PLUGGING AND
ABANDONMENT
INJECTION AND RECOVERY WELL

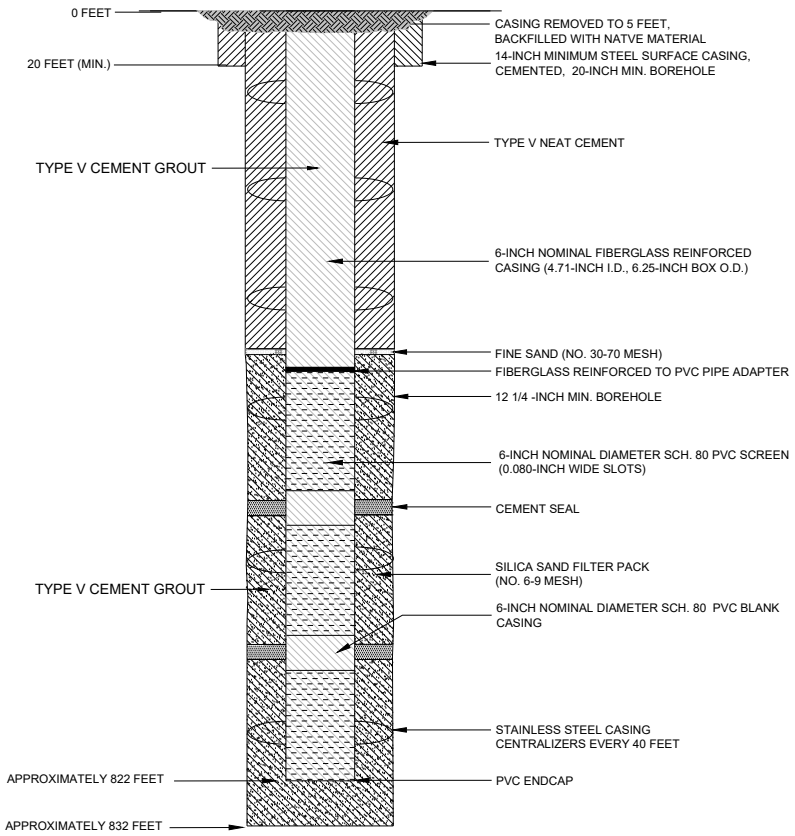

NOTES

1. WELL DESIGN DETAILS ARE BASED ON CORE HOLE AND WELL LOG RECORDS.

HALEY ALDRICH

FLORENCE COPPER, INC.
FLORENCE, ARIZONA

ABANDONMENT SCHEMATIC
RESOURCE BLOCK 64
TYPICAL INJECTION AND
RECOVERY WELL

SCALE: AS SHOWN
JULY 2019

FIGURE E-31

TABLE E-31
WELLS WITHIN RESOURCE BLOCK 64
FLORENCE COPPER PROJECT
FLORENCE, ARIZONA

Well Number	Easting	Northing	Resource Block	Depth to Top of Bedrock (ft bgs)	Depth to Top of Injection Zone (ft bgs)	Depth to Bottom of Injection Zone (ft bgs)
930	849109	745913	64	346	386	822
953	849109	745848	64	346	386	822
1478	849392	745495	64	346	386	822
1479	849462	745566	64	346	386	822
1481	849392	745566	64	346	386	822
1482	849321	745495	64	346	386	822
1483	849321	745424	64	346	386	822
1484	849250	745424	64	346	386	822
1485	849250	745353	64	346	386	822
1490	849109	745283	64	346	386	822
1492	849179	745353	64	346	386	822
1493	849179	745283	64	346	386	822
1565	849392	745636	64	346	386	822
1575	849321	745636	64	346	386	822
1576	849321	745707	64	346	386	822
1580	849250	745707	64	346	386	822
1581	849250	745778	64	346	386	822
1582	849179	745778	64	346	386	822
1584	849179	745848	64	346	386	822
1661	849109	745566	64	346	386	822
1662	849109	745636	64	346	386	822
1663	849038	745566	64	346	386	822
1664	848967	745636	64	346	386	822
1665	849038	745707	64	346	386	822
1666	849109	745707	64	346	386	822
1667	849038	745636	64	346	386	822
1668	849038	745778	64	346	386	822
1669	848967	745707	64	346	386	822
1670	849109	745778	64	346	386	822
1671	849109	745495	64	346	386	822
1672	849321	745566	64	346	386	822
1673	849250	745566	64	346	386	822
1674	849250	745636	64	346	386	822
1675	849179	745636	64	346	386	822
1676	849179	745424	64	346	386	822
1677	849250	745495	64	346	386	822
1678	849179	745495	64	346	386	822
1679	849179	745566	64	346	386	822
1680	849180	745706	64	346	386	822

TABLE E-31
WELLS WITHIN RESOURCE BLOCK 64
FLORENCE COPPER PROJECT
FLORENCE, ARIZONA

Well Number	Easting	Northing	Resource Block	Depth to Top of Bedrock (ft bgs)	Depth to Top of Injection Zone (ft bgs)	Depth to Bottom of Injection Zone (ft bgs)
1737	848967	745424	64	346	386	822
1738	849038	745495	64	346	386	822
1739	848967	745495	64	346	386	822
1742	848897	745566	64	346	386	822
1743	848967	745566	64	346	386	822
1744	848897	745495	64	346	386	822
1746	848897	745636	64	346	386	822
1747	848826	745566	64	346	386	822
1748	849109	745424	64	346	386	822
1749	849038	745424	64	346	386	822
1761	849109	745353	64	346	386	822
1762	849038	745353	64	346	386	822

Notes:

ft bgs = feet below ground surface

OMB No. 2040-0042 Approval Expires 4/30/2022

United States Environmental Protection Agency

WELL REWORK RECORD, PLUGGING AND ABANDONMENT PLAN, OR PLUGGING AND ABANDONMENT AFFIDAVIT

Name and Address, Phone Number and/or Email of Permittee

Florence Copper Project
1575 W Hunt Hwy,
Florence, AZ 85132

Permit or EPA ID Number	API Number	Full Well Name
R9UIC-AZ3-FY11-1		Block 65 Wells - See Attached Table E-32

State	County
Arizona	Pinal

Locate well in two directions from nearest lines of quarter section and drilling unit

Surface Location

SW 1/4 of SE 1/4 of Section 28 Township 4S Range 9E

_____ ft. from (N/S) _____ Line of quarter section

_____ ft. from (E/W) _____ Line of quarter section.

Latitude 33.048565

Longitude -111.427684

See Attached Table for Individual Well Coordinates.

Well Class	Timing of Action (pick one)	Type of Action (pick one)
☐ Class I ☐ Class II ☑ Class III ☐ Class V	☑ Notice Prior to Work Date Expected to Commence January 2027 ☐ Report After Work Date Work Ended	☐ Well Rework ☑ Plugging and Abandonment ☐ Conversion to a Non-Injection Well

Provide a narrative description of the work planned to be performed, or that was performed. Use additional pages as necessary. See instructions.

This plugging and abandonment applies to wells Class III wells to be constructed in block 65. There are 50 Class III multi-use injection/ recovery wells, planned for construction in this block. The injection and recovery wells will be of uniform design, and will be used for injection and recovery on an alternate basis. Some of the injection and recovery wells will be used as perimeter and observation wells prior to well field build-out.

The work performed includes plugging and abandonment of the Class III wells in resource block 65. Plugging and abandonment will be accomplished following procedures defined in Attachment E of the application. Plugging and abandonment details are shown on the attached Figure E-32.

Certification

I certify under the penalty of law that I have personally examined and am familiar with the information submitted in this document and all attachments and that, based on my inquiry of those individuals immediately responsible for obtaining the information, I believe that the information is true, accurate, and complete. I am aware that there are significant penalties for submitting false information, including the possibliity of fine and imprisonment. (Ref. 40 CFR § 144.32)

Name and Official Title *(Please type or print)*	Signature	Date Signed
Dan Johnson, VP - General Manager		10/3/2019

INSTRUCTIONS FOR FORM 7520-19

This form replaces forms 7520-12 and 7520-14. Use this form only when work is planned or has occurred that affects the well's construction or operation as an injection well, including work on the casing, tubing or packer (or for shallow Class V wells, the subsurface fluid emplacement network). Use one form per injection well. While reports or other information developed by contractors or service companies may be attached, this form must be signed by a responsible entity as described at 40 CFR 144.32. Note: operators closing Class V wells should use Form 7520-17.

NAME, ADDRESS, PHONE AND/OR EMAIL OF PERMITTEE: Enter the name and street address, city/town, state, and ZIP code of the permittee. Also provide an email address (if available) and/or a phone number.

PERMIT OR EPA ID NUMBER: Enter the well identification number or permit number assigned to the well by the EPA or the permitting authority.

API NUMBER: Enter the number assigned by the local jurisdiction (usually a State Oil and Gas Agency) using the American Petroleum Institute standard numbering system.

FULL WELL NAME: Enter the full name of the well or project.

Enter the **STATE** and **COUNTY** where the well is located. For States that do not have counties, use the name of that State's equivalent jurisdiction at a more local level.

WELL LOCATION: Fill in the complete township, range, and section to the nearest quarter-quarter section. A township is north or south of the baseline, and a range is east or west of the principal meridian (e.g., T12N, R34W). Also include the distance, in feet, from the nearest north or south line and nearest east or west line of the quarter-section. Also, enter the **latitude** and **longitude** of the well in decimal degrees, to five or six places if possible; be sure to include a negative sign for the longitude of a well in the Western Hemisphere and a negative sign for the latitude of a well in the Southern Hemisphere.

Enter the **WELL CLASS,** i.e., the class of injection well as defined in 40 CFR 144.6.

TIMING OF THE ACTION: Check ***Notice prior to work*** if the activity has not yet occurred (i.e., is planned). Check ***Report after work*** if the activity described has already occurred. As appropriate, include the date the activity is expected to start or the date the activity was completed. (Note this may not be available, e.g., for a plugging plan submitted with a permit application.)

TYPE OF ACTION: Check the appropriate box to describe the kind of activity being reported. Check ***Well Rework*** for work that was/will be performed on the well after it has already been in operation as an injection well. Check ***Plugging and Abandonment*** to report on plans for or descriptions of final closure/plugging after use as an injection well. Check ***Conversion to a Non-Injection Well*** if the well is to be converted to something other than an injection well.

Provide a **NARRATIVE DESCRIPTION** of the work planned to be performed, or that was performed. The narrative should include a description of the main procedures planned or that occurred during the work activity. A service company report, daily report, or similar document may be attached if it includes all the requested information and is clear and legible.

For well reworks, include the following information: The reason for the well rework; depths of activity; type of activity; changes to injection well configuration, well casing, or cement behind casing; any plug added to the well and its depth; any newly drilled interval and its depth; method(s) to demonstrate that the well has mechanical integrity (as applicable); and any deviations from the approved rework plan (as applicable).

For a well plugging plan, include the following information: Reason for the well plugging; number of plugs placed, and their depths; materials used as plugs (e.g., cast iron bridge plug, cement, cement retainer); method to set plugs; and wait-on-cement times, if any. Also provide one or more cost estimates from an independent firm in the business of plugging and abandoning wells to plug the well as described in the plan.

For well plugging affidavit, include the following information: Reason for the well plugging; number of plugs placed, and their depths; materials used as plugs (e.g., cast iron bridge plug, cement, cement retainer); method to set plugs; wait-on-cement times, if any; and any deviations from the approved plugging plan (if applicable).

For conversion to a non-injection well, include the following information: Depths of activity; type of activity; changes to injection well configuration, well casing, or cement behind casing; any plug added to the well and its depth; any newly drilled interval and its depth; depths of new perforations; and method(s) to demonstrate that the well has mechanical integrity (as applicable).

For all of the above activities, include a well sketch depicting the work, results of well tests/logging performed, service company tickets, and any other available information demonstrating how the work was/is to be performed. Also, specify whether depths are below ground surface, relative to Kelly bushing, etc.

CERTIFICATION: This form must be signed and dated by either: a responsible corporate officer for a corporation, by a general partner for a partnership, by the proprietor of a sole proprietorship, or by a principal executive or ranking elected official for a public agency.

PAPERWORK REDUCTION ACT NOTICE: The public reporting and recordkeeping burden for this collection of information is estimated to average between 6.0 and 7.9 hours per response, depending on the injection well class. Burden means the total time, effort, or financial resource expended by persons to generate, maintain, retain, or disclose or provide information to or for a Federal Agency. This includes the time needed to review instructions; develop, acquire, install, and utilize technology and systems for the purposes of collecting, validating, and verifying information, processing and maintaining information, and disclosing and providing information; adjust the existing ways to comply with any previously applicable instructions and requirements; train personnel to be able to respond to the collection of information; search data sources; complete and review the collection of information; and, transmit or otherwise disclose the information. An agency may not conduct or sponsor, and a person is not required to respond to, a collection of information unless it displays a currently valid OMB control number. Send comments on the Agency's need for this information, the accuracy of the provided burden estimates, and any suggested methods for minimizing respondent burden, including the use of automated collection techniques to Director, Collection Strategies Division, U.S. Environmental Protection Agency (2822), 1200 Pennsylvania Ave., NW., Washington, D.C. 20460. Include the OMB control number in any correspondence. Do not send the completed forms to this address.

PROPOSED DESIGN
INJECTION AND RECOVERY WELL

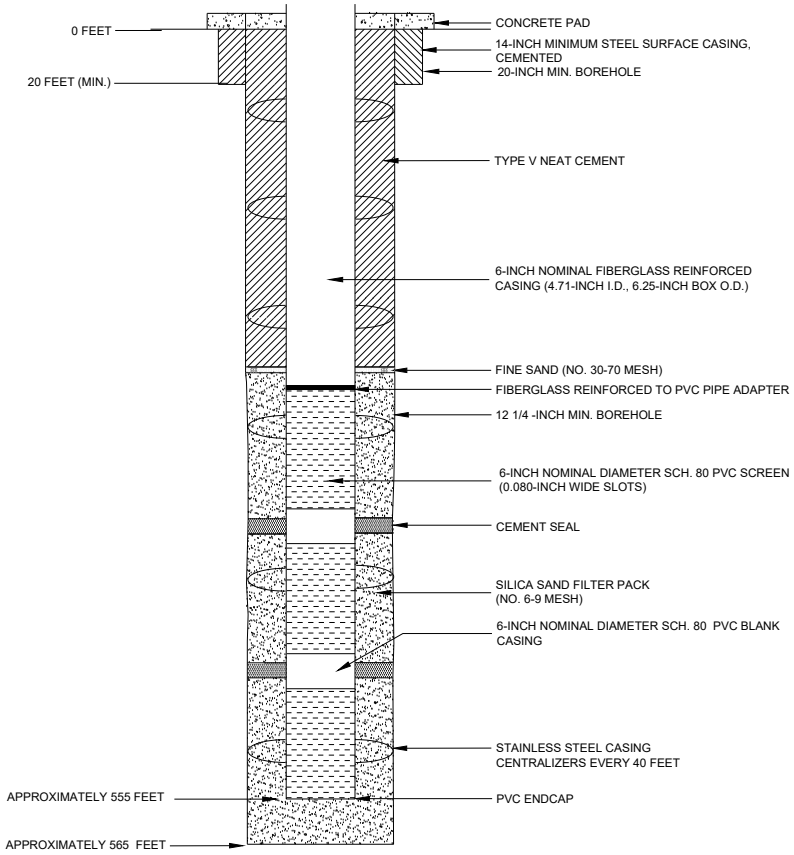

PROPOSED PLUGGING AND
ABANDONMENT
INJECTION AND RECOVERY WELL

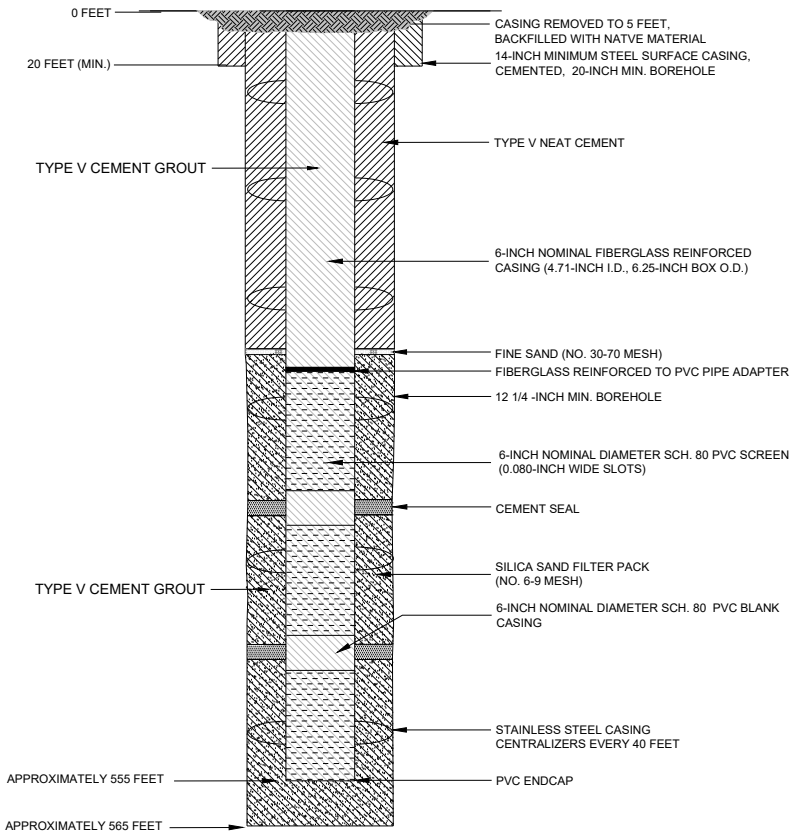

NOTES

1. WELL DESIGN DETAILS ARE BASED ON CORE HOLE AND WELL LOG RECORDS.

HALEY ALDRICH

FLORENCE COPPER, INC.
FLORENCE, ARIZONA

ABANDONMENT SCHEMATIC
RESOURCE BLOCK 65
TYPICAL INJECTION AND
RECOVERY WELL

SCALE: AS SHOWN
JULY 2019

FIGURE E-32

TABLE E-32
WELLS WITHIN RESOURCE BLOCK 65
FLORENCE COPPER PROJECT
FLORENCE, ARIZONA

Well Number	Easting	Northing	Resource Block	Depth to Top of Bedrock (ft bgs)	Depth to Top of Injection Zone (ft bgs)	Depth to Bottom of Injection Zone (ft bgs)
785	849816	745848	65	345	385	555
968	850169	745566	65	345	385	555
971	850099	745566	65	345	385	555
1083	849816	745283	65	345	385	555
1084	849886	745354	65	345	385	555
1085	849886	745283	65	345	385	555
1086	850099	745495	65	345	385	555
1087	850028	745424	65	345	385	555
1088	850028	745495	65	345	385	555
1089	849957	745424	65	345	385	555
1090	849957	745354	65	345	385	555
1494	849674	745424	65	345	385	555
1495	849604	745495	65	345	385	555
1496	849533	745566	65	345	385	555
1497	849816	745424	65	345	385	555
1498	849816	745354	65	345	385	555
1499	849745	745354	65	345	385	555
1586	849745	745495	65	345	385	555
1587	849816	745566	65	345	385	555
1588	849816	745636	65	345	385	555
1589	849745	745566	65	345	385	555
1590	849674	745495	65	345	385	555
1591	849604	745566	65	345	385	555
1592	849674	745636	65	345	385	555
1593	849745	745707	65	345	385	555
1594	849816	745707	65	345	385	555
1595	849745	745636	65	345	385	555
1596	849674	745566	65	345	385	555
1598	849745	745778	65	345	385	555
1599	849674	745707	65	345	385	555
1600	849604	745636	65	345	385	555
1602	849816	745778	65	345	385	555
1603	849745	745424	65	345	385	555
1604	849816	745495	65	345	385	555
1605	849886	745636	65	345	385	555
1606	849886	745424	65	345	385	555
1607	849886	745495	65	345	385	555
1608	849886	745566	65	345	385	555
1609	849887	745706	65	345	385	555

TABLE E-32
WELLS WITHIN RESOURCE BLOCK 65
FLORENCE COPPER PROJECT
FLORENCE, ARIZONA

Well Number	Easting	Northing	Resource Block	Depth to Top of Bedrock (ft bgs)	Depth to Top of Injection Zone (ft bgs)	Depth to Bottom of Injection Zone (ft bgs)
1610	849886	745778	65	345	385	555
1611	849886	745849	65	345	385	555
1612	849957	745495	65	345	385	555
1613	850028	745566	65	345	385	555
1614	850099	745636	65	345	385	555
1616	849957	745636	65	345	385	555
1617	850028	745707	65	345	385	555
1621	850028	745636	65	345	385	555
1622	849957	745566	65	345	385	555
1623	849957	745778	65	345	385	555
1626	849957	745707	65	345	385	555

Notes:

ft bgs = feet below ground surface

OMB No. 2040-0042 Approval Expires 4/30/2022

United States Environmental Protection Agency

WELL REWORK RECORD, PLUGGING AND ABANDONMENT PLAN, OR PLUGGING AND ABANDONMENT AFFIDAVIT

Name and Address, Phone Number and/or Email of Permittee

Florence Copper Project
1575 W Hunt Hwy,
Florence, AZ 85132

Permit or EPA ID Number	API Number	Full Well Name
R9UIC-AZ3-FY11-1		Block 66 Wells - See Attached Table E-33

State	County
Arizona	Pinal

Locate well in two directions from nearest lines of quarter section and drilling unit

Surface Location

SE 1/4 of SE 1/4 of Section 28 Township 4S Range 9E

____ ft. from (N/S) ____ Line of quarter section

____ ft. from (E/W) ____ Line of quarter section.

Latitude 33.048620

Longitude -111.426409

See Attached Table for Individual Well Coordinates.

Well Class	Timing of Action (pick one)	Type of Action (pick one)
☐ Class I ☐ Class II ☑ Class III ☐ Class V	☑ Notice Prior to Work Date Expected to Commence January 2027 ☐ Report After Work Date Work Ended	☐ Well Rework ☑ Plugging and Abandonment ☐ Conversion to a Non-Injection Well

Provide a narrative description of the work planned to be performed, or that was performed. Use additional pages as necessary. See instructions.

This plugging and abandonment applies to wells Class III wells to be constructed in block 66. There are 1 Class III multi-use injection/ recovery wells, 1 dedicated Class III observation, and 1 Class III perimeter wells planned for construction in this block. The injection and recovery wells will be of uniform design, and will be used for injection and recovery on an alternate basis. Some of the injection and recovery wells will be used as perimeter and observation wells prior to well field build-out. The dedicated perimeter observation well will have a design and depth similar to the injection and recovery wells, but will not have a segmented well screen.

The work performed includes plugging and abandonment of the Class III wells in resource block 66. Plugging and abandonment will be accomplished following procedures defined in Attachment E of the application. Plugging and abandonment details are shown on the attached Figures E-33a and E-33b.

Certification

I certify under the penalty of law that I have personally examined and am familiar with the information submitted in this document and all attachments and that, based on my inquiry of those individuals immediately responsible for obtaining the information, I believe that the information is true, accurate, and complete. I am aware that there are significant penalties for submitting false information, including the possibliity of fine and imprisonment. (Ref. 40 CFR § 144.32)

Name and Official Title *(Please type or print)*	Signature	Date Signed
Dan Johnson, VP - General Manager		10/3/2019

INSTRUCTIONS FOR FORM 7520-19

This form replaces forms 7520-12 and 7520-14. Use this form only when work is planned or has occurred that affects the well's construction or operation as an injection well, including work on the casing, tubing or packer (or for shallow Class V wells, the subsurface fluid emplacement network). Use one form per injection well. While reports or other information developed by contractors or service companies may be attached, this form must be signed by a responsible entity as described at 40 CFR 144.32. Note: operators closing Class V wells should use Form 7520-17.

NAME, ADDRESS, PHONE AND/OR EMAIL OF PERMITTEE: Enter the name and street address, city/town, state, and ZIP code of the permittee. Also provide an email address (if available) and/or a phone number.

PERMIT OR EPA ID NUMBER: Enter the well identification number or permit number assigned to the well by the EPA or the permitting authority.

API NUMBER: Enter the number assigned by the local jurisdiction (usually a State Oil and Gas Agency) using the American Petroleum Institute standard numbering system.

FULL WELL NAME: Enter the full name of the well or project.

Enter the **STATE** and **COUNTY** where the well is located. For States that do not have counties, use the name of that State's equivalent jurisdiction at a more local level.

WELL LOCATION: Fill in the complete township, range, and section to the nearest quarter-quarter section. A township is north or south of the baseline, and a range is east or west of the principal meridian (e.g., T12N, R34W). Also include the distance, in feet, from the nearest north or south line and nearest east or west line of the quarter-section. Also, enter the **latitude** and **longitude** of the well in decimal degrees, to five or six places if possible; be sure to include a negative sign for the longitude of a well in the Western Hemisphere and a negative sign for the latitude of a well in the Southern Hemisphere.

Enter the **WELL CLASS,** i.e., the class of injection well as defined in 40 CFR 144.6.

TIMING OF THE ACTION: Check ***Notice prior to work*** if the activity has not yet occurred (i.e., is planned). Check ***Report after work*** if the activity described has already occurred. As appropriate, include the date the activity is expected to start or the date the activity was completed. (Note this may not be available, e.g., for a plugging plan submitted with a permit application.)

TYPE OF ACTION: Check the appropriate box to describe the kind of activity being reported. Check ***Well Rework*** for work that was/will be performed on the well after it has already been in operation as an injection well. Check ***Plugging and Abandonment*** to report on plans for or descriptions of final closure/plugging after use as an injection well. Check ***Conversion to a Non-Injection Well*** if the well is to be converted to something other than an injection well.

Provide a **NARRATIVE DESCRIPTION** of the work planned to be performed, or that was performed. The narrative should include a description of the main procedures planned or that occurred during the work activity. A service company report, daily report, or similar document may be attached if it includes all the requested information and is clear and legible.

For well reworks, include the following information: The reason for the well rework; depths of activity; type of activity; changes to injection well configuration, well casing, or cement behind casing; any plug added to the well and its depth; any newly drilled interval and its depth; method(s) to demonstrate that the well has mechanical integrity (as applicable); and any deviations from the approved rework plan (as applicable).

For a well plugging plan, include the following information: Reason for the well plugging; number of plugs placed, and their depths; materials used as plugs (e.g., cast iron bridge plug, cement, cement retainer); method to set plugs; and wait-on-cement times, if any. Also provide one or more cost estimates from an independent firm in the business of plugging and abandoning wells to plug the well as described in the plan.

For well plugging affidavit, include the following information: Reason for the well plugging; number of plugs placed, and their depths; materials used as plugs (e.g., cast iron bridge plug, cement, cement retainer); method to set plugs; wait-on-cement times, if any; and any deviations from the approved plugging plan (if applicable).

For conversion to a non-injection well, include the following information: Depths of activity; type of activity; changes to injection well configuration, well casing, or cement behind casing; any plug added to the well and its depth; any newly drilled interval and its depth; depths of new perforations; and method(s) to demonstrate that the well has mechanical integrity (as applicable).

For all of the above activities, include a well sketch depicting the work, results of well tests/logging performed, service company tickets, and any other available information demonstrating how the work was/is to be performed. Also, specify whether depths are below ground surface, relative to Kelly bushing, etc.

CERTIFICATION: This form must be signed and dated by either: a responsible corporate officer for a corporation, by a general partner for a partnership, by the proprietor of a sole proprietorship, or by a principal executive or ranking elected official for a public agency.

PAPERWORK REDUCTION ACT NOTICE: The public reporting and recordkeeping burden for this collection of information is estimated to average between 6.0 and 7.9 hours per response, depending on the injection well class. Burden means the total time, effort, or financial resource expended by persons to generate, maintain, retain, or disclose or provide information to or for a Federal Agency. This includes the time needed to review instructions; develop, acquire, install, and utilize technology and systems for the purposes of collecting, validating, and verifying information, processing and maintaining information, and disclosing and providing information; adjust the existing ways to comply with any previously applicable instructions and requirements; train personnel to be able to respond to the collection of information; search data sources; complete and review the collection of information; and, transmit or otherwise disclose the information. An agency may not conduct or sponsor, and a person is not required to respond to, a collection of information unless it displays a currently valid OMB control number. Send comments on the Agency's need for this information, the accuracy of the provided burden estimates, and any suggested methods for minimizing respondent burden, including the use of automated collection techniques to Director, Collection Strategies Division, U.S. Environmental Protection Agency (2822), 1200 Pennsylvania Ave., NW., Washington, D.C. 20460. Include the OMB control number in any correspondence. Do not send the completed forms to this address.

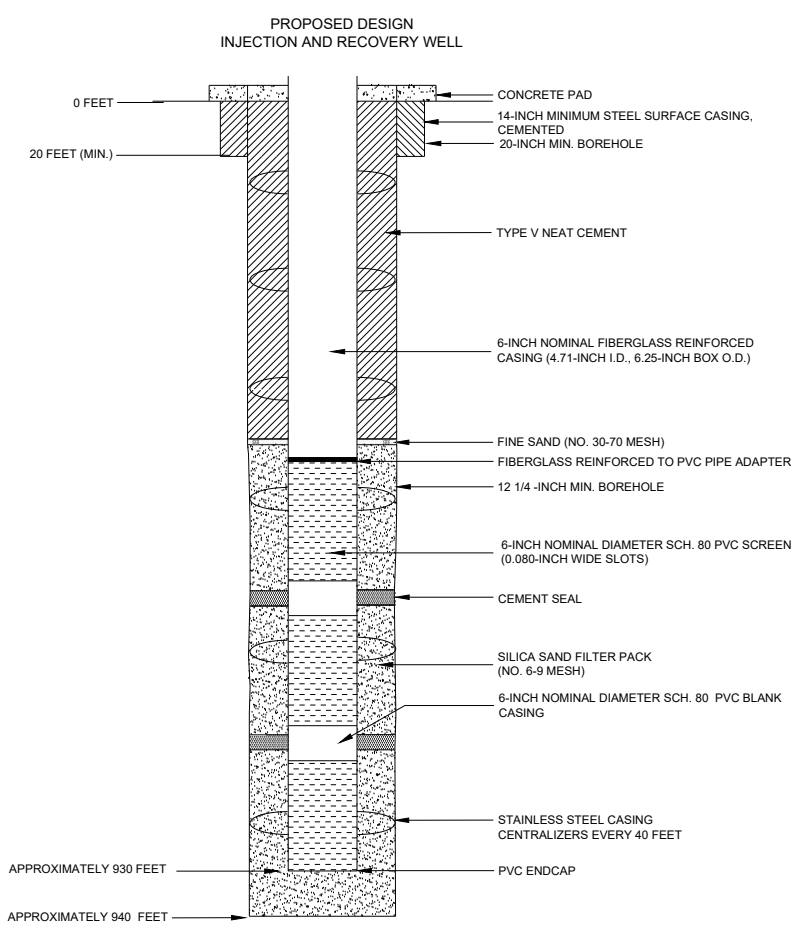

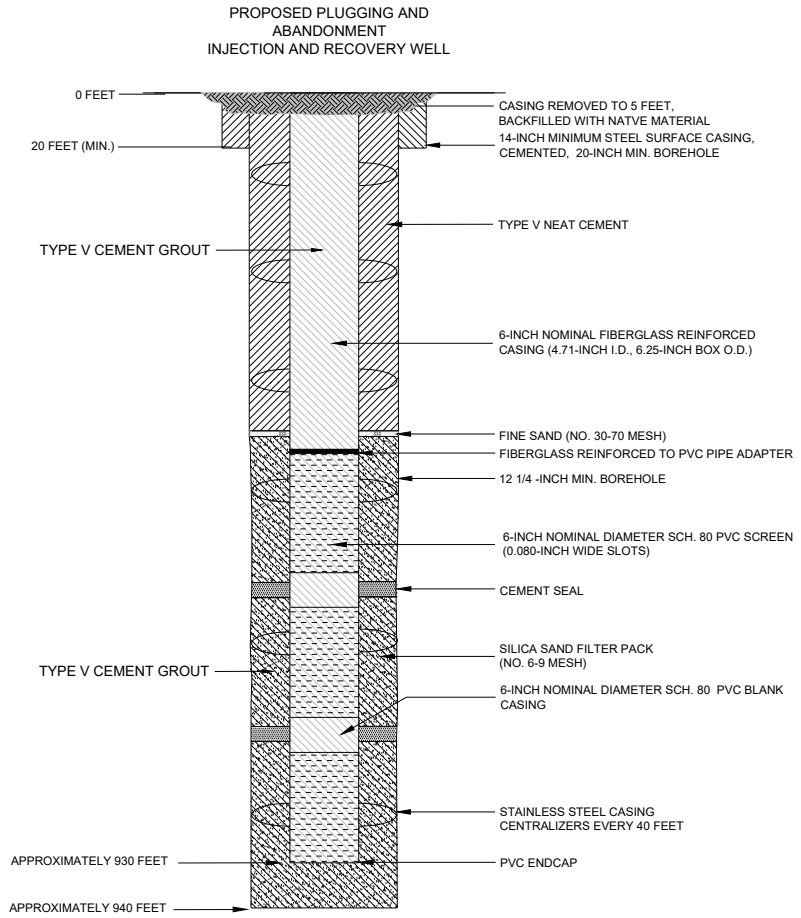

NOTES

1. WELL DESIGN DETAILS ARE BASED ON CORE HOLE AND WELL LOG RECORDS.

HALEY ALDRICH

FLORENCE COPPER, INC.
FLORENCE, ARIZONA

ABANDONMENT SCHEMATIC
RESOURCE BLOCK 66
TYPICAL INJECTION AND RECOVERY WELL

SCALE: AS SHOWN
JULY 2019

FIGURE E-33a

Saved by: MNICHOLLS Printed: 7/25/2019 7:20 PM Sheet: HA-FIG-A-L(2)
\\HALEYALDRICH.COM\SHARE\PHX_COMMON\PROJECTS\FLORENCE COPPER\132473 FLORENCE GROUNDWATER PERMITTING\CAD\132473_000-OBSERVATION_WELL_CONSTRUCTION DIAGRAM.DWG

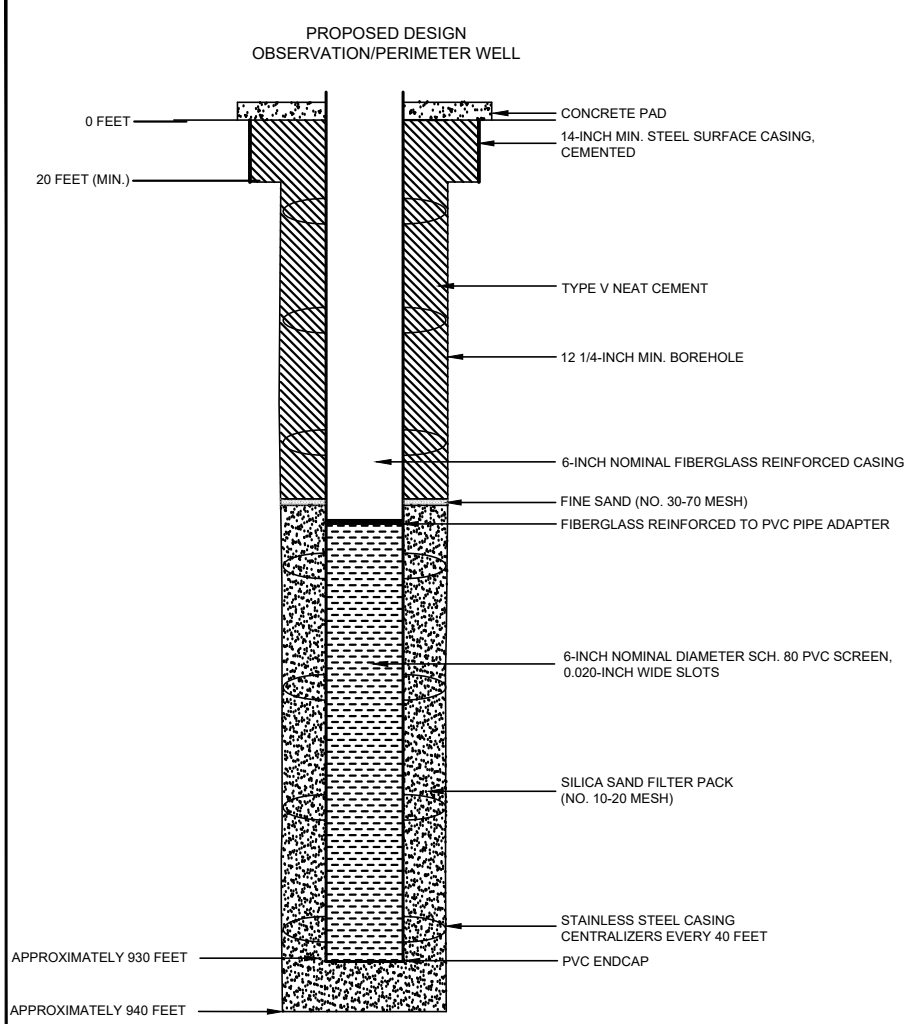

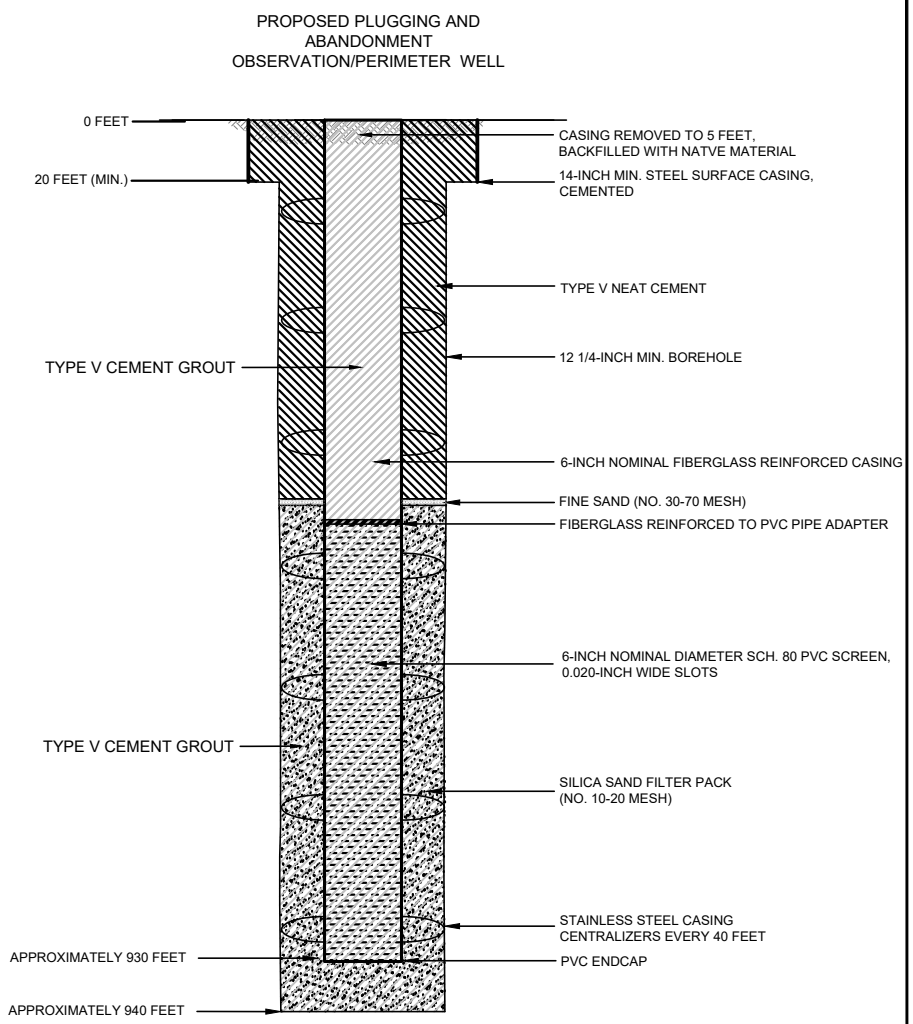

NOTES

1. WELL DESIGN DETAILS ARE BASED ON CORE HOLE AND WELL LOG RECORDS.

HALEY ALDRICH

FLORENCE COPPER, INC.
FLORENCE, ARIZONA

ABANDONMENT SCHEMATIC
RESOURCE BLOCK 66
OBSERVATION/PERIMETER WELL

JULY 2019
SCALE: AS SHOWN

FIGURE E-33b

TABLE E-33
WELLS WITHIN RESOURCE BLOCK 66
FLORENCE COPPER PROJECT
FLORENCE, ARIZONA

Well Number	Easting	Northing	Resource Block	Depth to Top of Bedrock (ft bgs)	Depth to Top of Injection Zone (ft bgs)	Depth to Bottom of Injection Zone (ft bgs)
977	850240	745566	66	466	506	930
O18	850381	745636	66	466	506	930
P35	850311	745566	66	466	506	930

Notes:

ft bgs = feet below ground surface

OMB No. 2040-0042 Approval Expires 4/30/2022

United States Environmental Protection Agency

WELL REWORK RECORD, PLUGGING AND ABANDONMENT PLAN, OR PLUGGING AND ABANDONMENT AFFIDAVIT

Name and Address, Phone Number and/or Email of Permittee

Florence Copper Project
1575 W Hunt Hwy,
Florence, AZ 85132

Permit or EPA ID Number	API Number	Full Well Name
R9UIC-AZ3-FY11-1		Block 70 Wells - See Attached Table E-34

State	County
Arizona	Pinal

Locate well in two directions from nearest lines of quarter section and drilling unit

Surface Location

SW 1/4 of SW 1/4 of Section 28 Township 4S Range 9E

ft. from (N/S) Line of quarter section

ft. from (E/W) Line of quarter section.

Latitude 33.047637

Longitude -111.435747

See Attached Table for Individual Well Coordinates.

Well Class	Timing of Action (pick one)	Type of Action (pick one)
☐ Class I ☐ Class II ☑ Class III ☐ Class V	☑ Notice Prior to Work Date Expected to Commence January 2027 ☐ Report After Work Date Work Ended	☐ Well Rework ☑ Plugging and Abandonment ☐ Conversion to a Non-Injection Well

Provide a narrative description of the work planned to be performed, or that was performed. Use additional pages as necessary. See instructions.

This plugging and abandonment applies to wells Class III wells to be constructed in block 70. There are 18 Class III multi-use injection/ recovery wells, and 2 Class III perimeter wells planned for construction in this block. The injection and recovery wells will be of uniform design, and will be used for injection and recovery on an alternate basis. Some of the injection and recovery wells will be used as perimeter and observation wells prior to well field build-out. The dedicated perimeter observation well will have a design and depth similar to the injection and recovery wells, but will not have a segmented well screen.

The work performed includes plugging and abandonment of the Class III wells in resource block 70. Plugging and abandonment will be accomplished following procedures defined in Attachment E of the application. Plugging and abandonment details are shown on the attached Figures E-34a and E-34b.

Certification

I certify under the penalty of law that I have personally examined and am familiar with the information submitted in this document and all attachments and that, based on my inquiry of those individuals immediately responsible for obtaining the information, I believe that the information is true, accurate, and complete. I am aware that there are significant penalties for submitting false information, including the possibliity of fine and imprisonment. (Ref. 40 CFR § 144.32)

Name and Official Title *(Please type or print)*	Signature	Date Signed
Dan Johnson, VP - General Manager		10/3/2019

INSTRUCTIONS FOR FORM 7520-19

This form replaces forms 7520-12 and 7520-14. Use this form only when work is planned or has occurred that affects the well's construction or operation as an injection well, including work on the casing, tubing or packer (or for shallow Class V wells, the subsurface fluid emplacement network). Use one form per injection well. While reports or other information developed by contractors or service companies may be attached, this form must be signed by a responsible entity as described at 40 CFR 144.32. Note: operators closing Class V wells should use Form 7520-17.

NAME, ADDRESS, PHONE AND/OR EMAIL OF PERMITTEE: Enter the name and street address, city/town, state, and ZIP code of the permittee. Also provide an email address (if available) and/or a phone number.

PERMIT OR EPA ID NUMBER: Enter the well identification number or permit number assigned to the well by the EPA or the permitting authority.

API NUMBER: Enter the number assigned by the local jurisdiction (usually a State Oil and Gas Agency) using the American Petroleum Institute standard numbering system.

FULL WELL NAME: Enter the full name of the well or project.

Enter the **STATE** and **COUNTY** where the well is located. For States that do not have counties, use the name of that State's equivalent jurisdiction at a more local level.

WELL LOCATION: Fill in the complete township, range, and section to the nearest quarter-quarter section. A township is north or south of the baseline, and a range is east or west of the principal meridian (e.g., T12N, R34W). Also include the distance, in feet, from the nearest north or south line and nearest east or west line of the quarter-section. Also, enter the **latitude** and **longitude** of the well in decimal degrees, to five or six places if possible; be sure to include a negative sign for the longitude of a well in the Western Hemisphere and a negative sign for the latitude of a well in the Southern Hemisphere.

Enter the **WELL CLASS,** i.e., the class of injection well as defined in 40 CFR 144.6.

TIMING OF THE ACTION: Check ***Notice prior to work*** if the activity has not yet occurred (i.e., is planned). Check ***Report after work*** if the activity described has already occurred. As appropriate, include the date the activity is expected to start or the date the activity was completed. (Note this may not be available, e.g., for a plugging plan submitted with a permit application.)

TYPE OF ACTION: Check the appropriate box to describe the kind of activity being reported. Check ***Well Rework*** for work that was/will be performed on the well after it has already been in operation as an injection well. Check ***Plugging and Abandonment*** to report on plans for or descriptions of final closure/plugging after use as an injection well. Check ***Conversion to a Non-Injection Well*** if the well is to be converted to something other than an injection well.

Provide a **NARRATIVE DESCRIPTION** of the work planned to be performed, or that was performed. The narrative should include a description of the main procedures planned or that occurred during the work activity. A service company report, daily report, or similar document may be attached if it includes all the requested information and is clear and legible.

For well reworks, include the following information: The reason for the well rework; depths of activity; type of activity; changes to injection well configuration, well casing, or cement behind casing; any plug added to the well and its depth; any newly drilled interval and its depth; method(s) to demonstrate that the well has mechanical integrity (as applicable); and any deviations from the approved rework plan (as applicable).

For a well plugging plan, include the following information: Reason for the well plugging; number of plugs placed, and their depths; materials used as plugs (e.g., cast iron bridge plug, cement, cement retainer); method to set plugs; and wait-on-cement times, if any. Also provide one or more cost estimates from an independent firm in the business of plugging and abandoning wells to plug the well as described in the plan.

For well plugging affidavit, include the following information: Reason for the well plugging; number of plugs placed, and their depths; materials used as plugs (e.g., cast iron bridge plug, cement, cement retainer); method to set plugs; wait-on-cement times, if any; and any deviations from the approved plugging plan (if applicable).

For conversion to a non-injection well, include the following information: Depths of activity; type of activity; changes to injection well configuration, well casing, or cement behind casing; any plug added to the well and its depth; any newly drilled interval and its depth; depths of new perforations; and method(s) to demonstrate that the well has mechanical integrity (as applicable).

For all of the above activities, include a well sketch depicting the work, results of well tests/logging performed, service company tickets, and any other available information demonstrating how the work was/is to be performed. Also, specify whether depths are below ground surface, relative to Kelly bushing, etc.

CERTIFICATION: This form must be signed and dated by either: a responsible corporate officer for a corporation, by a general partner for a partnership, by the proprietor of a sole proprietorship, or by a principal executive or ranking elected official for a public agency.

PAPERWORK REDUCTION ACT NOTICE: The public reporting and recordkeeping burden for this collection of information is estimated to average between 6.0 and 7.9 hours per response, depending on the injection well class. Burden means the total time, effort, or financial resource expended by persons to generate, maintain, retain, or disclose or provide information to or for a Federal Agency. This includes the time needed to review instructions; develop, acquire, install, and utilize technology and systems for the purposes of collecting, validating, and verifying information, processing and maintaining information, and disclosing and providing information; adjust the existing ways to comply with any previously applicable instructions and requirements; train personnel to be able to respond to the collection of information; search data sources; complete and review the collection of information; and, transmit or otherwise disclose the information. An agency may not conduct or sponsor, and a person is not required to respond to, a collection of information unless it displays a currently valid OMB control number. Send comments on the Agency's need for this information, the accuracy of the provided burden estimates, and any suggested methods for minimizing respondent burden, including the use of automated collection techniques to Director, Collection Strategies Division, U.S. Environmental Protection Agency (2822), 1200 Pennsylvania Ave., NW., Washington, D.C. 20460. Include the OMB control number in any correspondence. Do not send the completed forms to this address.

PROPOSED DESIGN
INJECTION AND RECOVERY WELL

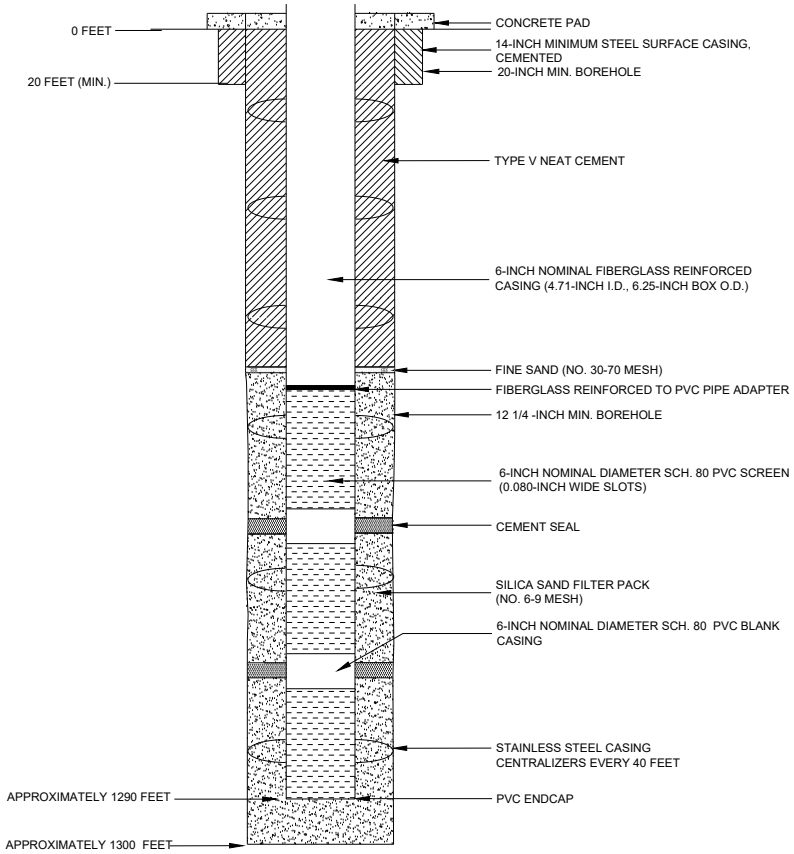

PROPOSED PLUGGING AND
ABANDONMENT
INJECTION AND RECOVERY WELL

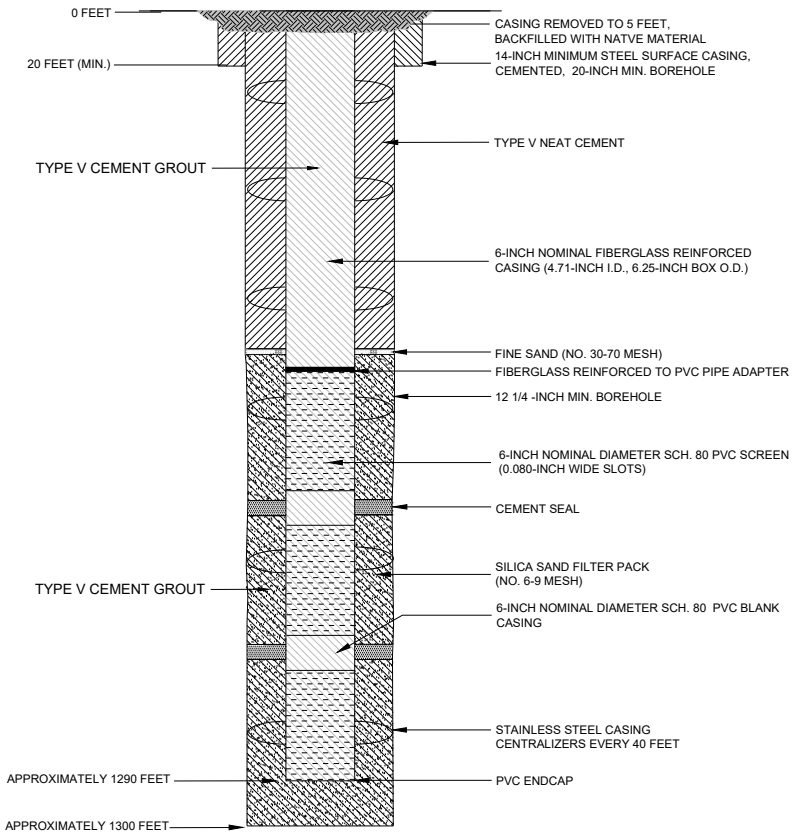

NOTES

1. WELL DESIGN DETAILS ARE BASED ON CORE HOLE AND WELL LOG RECORDS.

HALEY ALDRICH

FLORENCE COPPER, INC.
FLORENCE, ARIZONA

ABANDONMENT SCHEMATIC
RESOURCE BLOCK 70
TYPICAL INJECTION AND
RECOVERY WELL

SCALE: AS SHOWN
JULY 2019

FIGURE E-34a

Saved by: MNICHOLLS Printed: 7/25/2019 7:20 PM Sheet: HA-FIG-A-L(2)
\\HALEYALDRICH.COM\SHARE\PHX_COMMON\PROJECTS\FLORENCE COPPER\132473 FLORENCE GROUNDWATER PERMITTING\CAD\132473_000-OBSERVATION_WELL_CONSTRUCTION DIAGRAM.DWG

PROPOSED DESIGN
OBSERVATION/PERIMETER WELL

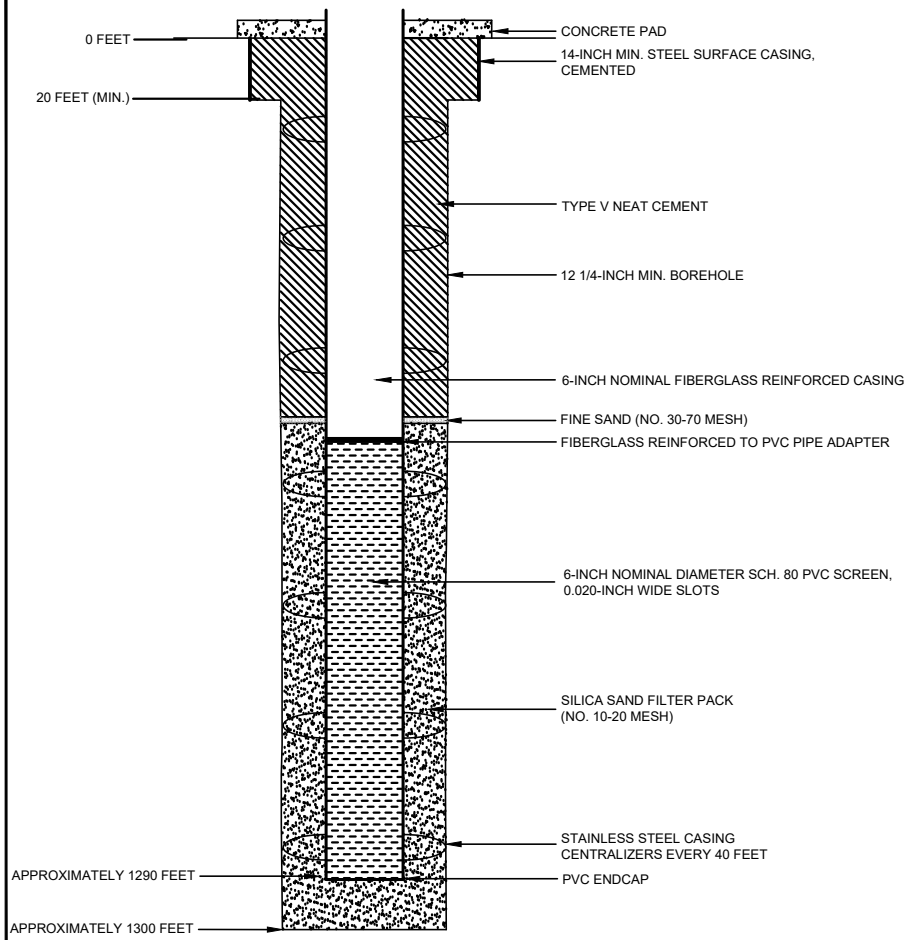

PROPOSED PLUGGING AND
ABANDONMENT
OBSERVATION/PERIMETER WELL

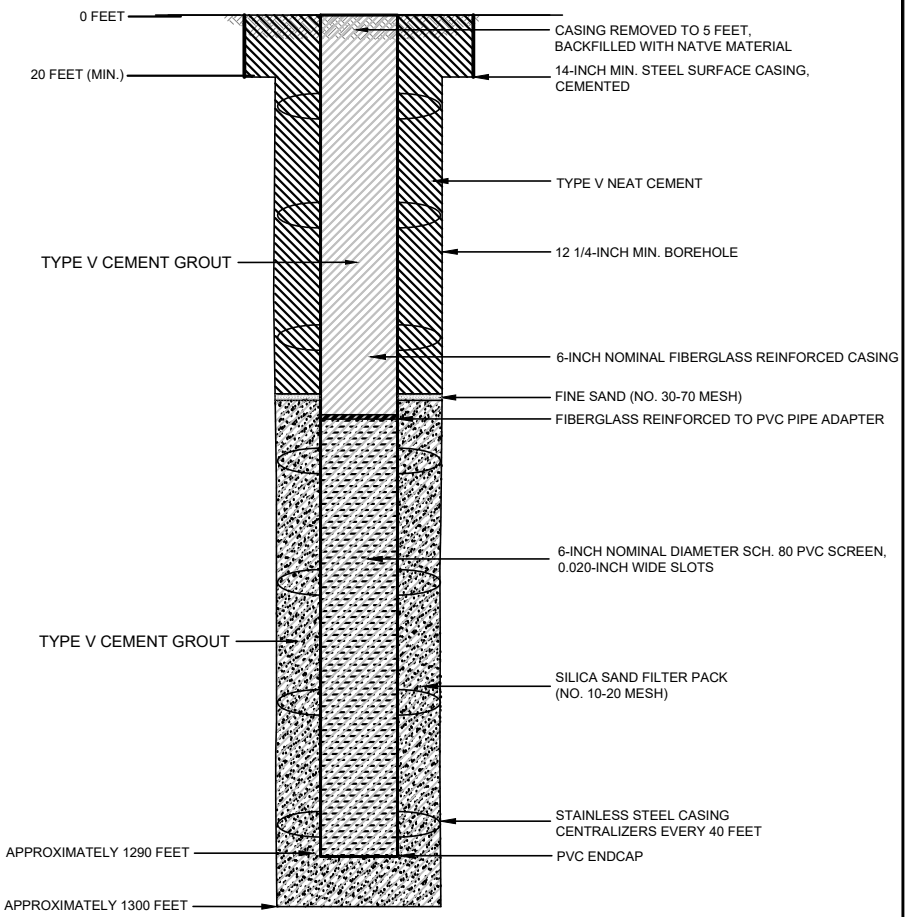

NOTES

1. WELL DESIGN DETAILS ARE BASED ON CORE HOLE AND WELL LOG RECORDS.

HALEY ALDRICH

FLORENCE COPPER, INC.
FLORENCE, ARIZONA

ABANDONMENT SCHEMATIC
RESOURCE BLOCK 70
OBSERVATION/PERIMETER WELL

JULY 2019
SCALE: AS SHOWN

FIGURE E-34b

TABLE E-34
WELLS WITHIN RESOURCE BLOCK 70
FLORENCE COPPER PROJECT
FLORENCE, ARIZONA

Well Number	Easting	Northing	Resource Block	Depth to Top of Bedrock (ft bgs)	Depth to Top of Injection Zone (ft bgs)	Depth to Bottom of Injection Zone (ft bgs)
1883	847412	744929	70	377	417	1290
1885	847412	745000	70	377	417	1290
1886	847341	744929	70	377	417	1290
2029	847695	745212	70	377	417	1290
2031	847553	745071	70	377	417	1290
2032	847482	745000	70	377	417	1290
2033	847553	745141	70	377	417	1290
2034	847482	745071	70	377	417	1290
2035	847625	745140	70	377	417	1290
2036	847624	745212	70	377	417	1290
2219	847411	745493	70	377	417	1290
2228	847481	745423	70	377	417	1290
2232	847552	745352	70	377	417	1290
2234	847623	745281	70	377	417	1290
2238	847411	745423	70	377	417	1290
2239	847340	745423	70	377	417	1290
2240	847340	745493	70	377	417	1290
2241	847269	745423	70	377	417	1290
2242	847411	745069	70	377	417	1290
2243	847481	745140	70	377	417	1290
2244	847340	745140	70	377	417	1290
2245	847411	745211	70	377	417	1290
2246	847481	745211	70	377	417	1290
2247	847411	745140	70	377	417	1290
2248	847340	745069	70	377	417	1290
2249	847269	745210	70	377	417	1290
2250	847340	745281	70	377	417	1290
2251	847411	745281	70	377	417	1290
2252	847340	745210	70	377	417	1290
2253	847269	745140	70	377	417	1290
2254	847340	745352	70	377	417	1290
2255	847269	745281	70	377	417	1290
2256	847199	745210	70	377	417	1290
2257	847199	745281	70	377	417	1290
2258	847269	745352	70	377	417	1290
2259	847199	745352	70	377	417	1290
2261	847481	745352	70	377	417	1290
2262	847411	745352	70	377	417	1290
2263	847552	745281	70	377	417	1290

TABLE E-34
WELLS WITHIN RESOURCE BLOCK 70
FLORENCE COPPER PROJECT
FLORENCE, ARIZONA

Well Number	Easting	Northing	Resource Block	Depth to Top of Bedrock (ft bgs)	Depth to Top of Injection Zone (ft bgs)	Depth to Bottom of Injection Zone (ft bgs)
2264	847481	745281	70	377	417	1290
2265	847552	745211	70	377	417	1290
2311	847340	744998	70	377	417	1290
2314	847269	745069	70	377	417	1290
2315	847269	744998	70	377	417	1290
P71	847199	745140	70	377	417	1290
P72	847128	745281	70	377	417	1290

Notes:

ft bgs = feet below ground surface

OMB No. 2040-0042 Approval Expires 4/30/2022

United States Environmental Protection Agency

WELL REWORK RECORD, PLUGGING AND ABANDONMENT PLAN, OR PLUGGING AND ABANDONMENT AFFIDAVIT

Name and Address, Phone Number and/or Email of Permittee

Florence Copper Project
1575 W Hunt Hwy,
Florence, AZ 85132

Permit or EPA ID Number	API Number	Full Well Name
R9UIC-AZ3-FY11-1		Block 71 Wells - See Attached Table E-35

State	County
Arizona	Pinal

Locate well in two directions from nearest lines of quarter section and drilling unit

Surface Location

SE 1/4 of SW 1/4 of Section 28 Township 4S Range 9E

____ ft. from (N/S) ____ Line of quarter section

____ ft. from (E/W) ____ Line of quarter section.

Latitude 33.047609

Longitude -111.433454

See Attached Table for Individual Well Coordinates.

Well Class	Timing of Action (pick one)	Type of Action (pick one)
☐ Class I ☐ Class II ☑ Class III ☐ Class V	☑ Notice Prior to Work Date Expected to Commence January 2027 ☐ Report After Work Date Work Ended	☐ Well Rework ☑ Plugging and Abandonment ☐ Conversion to a Non-Injection Well

Provide a narrative description of the work planned to be performed, or that was performed. Use additional pages as necessary. See instructions.

This plugging and abandonment applies to wells Class III wells to be constructed in block 71. There are 48 Class III multi-use injection/ recovery wells, planned for construction in this block. The injection and recovery wells will be of uniform design, and will be used for injection and recovery on an alternate basis. Some of the injection and recovery wells will be used as perimeter and observation wells prior to well field build-out.

The work performed includes plugging and abandonment of the Class III wells in resource block 71. Plugging and abandonment will be accomplished following procedures defined in Attachment E of the application. Plugging and abandonment details are shown on the attached Figure E-35.

Certification

I certify under the penalty of law that I have personally examined and am familiar with the information submitted in this document and all attachments and that, based on my inquiry of those individuals immediately responsible for obtaining the information, I believe that the information is true, accurate, and complete. I am aware that there are significant penalties for submitting false information, including the possibliity of fine and imprisonment. (Ref. 40 CFR § 144.32)

Name and Official Title *(Please type or print)*	Signature	Date Signed
Dan Johnson, VP - General Manager		10/3/2019

INSTRUCTIONS FOR FORM 7520-19

This form replaces forms 7520-12 and 7520-14. Use this form only when work is planned or has occurred that affects the well's construction or operation as an injection well, including work on the casing, tubing or packer (or for shallow Class V wells, the subsurface fluid emplacement network). Use one form per injection well. While reports or other information developed by contractors or service companies may be attached, this form must be signed by a responsible entity as described at 40 CFR 144.32. Note: operators closing Class V wells should use Form 7520-17.

NAME, ADDRESS, PHONE AND/OR EMAIL OF PERMITTEE: Enter the name and street address, city/town, state, and ZIP code of the permittee. Also provide an email address (if available) and/or a phone number.

PERMIT OR EPA ID NUMBER: Enter the well identification number or permit number assigned to the well by the EPA or the permitting authority.

API NUMBER: Enter the number assigned by the local jurisdiction (usually a State Oil and Gas Agency) using the American Petroleum Institute standard numbering system.

FULL WELL NAME: Enter the full name of the well or project.

Enter the **STATE** and **COUNTY** where the well is located. For States that do not have counties, use the name of that State's equivalent jurisdiction at a more local level.

WELL LOCATION: Fill in the complete township, range, and section to the nearest quarter-quarter section. A township is north or south of the baseline, and a range is east or west of the principal meridian (e.g., T12N, R34W). Also include the distance, in feet, from the nearest north or south line and nearest east or west line of the quarter-section. Also, enter the **latitude** and **longitude** of the well in decimal degrees, to five or six places if possible; be sure to include a negative sign for the longitude of a well in the Western Hemisphere and a negative sign for the latitude of a well in the Southern Hemisphere.

Enter the **WELL CLASS,** i.e., the class of injection well as defined in 40 CFR 144.6.

TIMING OF THE ACTION: Check ***Notice prior to work*** if the activity has not yet occurred (i.e., is planned). Check ***Report after work*** if the activity described has already occurred. As appropriate, include the date the activity is expected to start or the date the activity was completed. (Note this may not be available, e.g., for a plugging plan submitted with a permit application.)

TYPE OF ACTION: Check the appropriate box to describe the kind of activity being reported. Check ***Well Rework*** for work that was/will be performed on the well after it has already been in operation as an injection well. Check ***Plugging and Abandonment*** to report on plans for or descriptions of final closure/plugging after use as an injection well. Check ***Conversion to a Non-Injection Well*** if the well is to be converted to something other than an injection well.

Provide a **NARRATIVE DESCRIPTION** of the work planned to be performed, or that was performed. The narrative should include a description of the main procedures planned or that occurred during the work activity. A service company report, daily report, or similar document may be attached if it includes all the requested information and is clear and legible.

For well reworks, include the following information: The reason for the well rework; depths of activity; type of activity; changes to injection well configuration, well casing, or cement behind casing; any plug added to the well and its depth; any newly drilled interval and its depth; method(s) to demonstrate that the well has mechanical integrity (as applicable); and any deviations from the approved rework plan (as applicable).

For a well plugging plan, include the following information: Reason for the well plugging; number of plugs placed, and their depths; materials used as plugs (e.g., cast iron bridge plug, cement, cement retainer); method to set plugs; and wait-on-cement times, if any. Also provide one or more cost estimates from an independent firm in the business of plugging and abandoning wells to plug the well as described in the plan.

For well plugging affidavit, include the following information: Reason for the well plugging; number of plugs placed, and their depths; materials used as plugs (e.g., cast iron bridge plug, cement, cement retainer); method to set plugs; wait-on-cement times, if any; and any deviations from the approved plugging plan (if applicable).

For conversion to a non-injection well, include the following information: Depths of activity; type of activity; changes to injection well configuration, well casing, or cement behind casing; any plug added to the well and its depth; any newly drilled interval and its depth; depths of new perforations; and method(s) to demonstrate that the well has mechanical integrity (as applicable).

For all of the above activities, include a well sketch depicting the work, results of well tests/logging performed, service company tickets, and any other available information demonstrating how the work was/is to be performed. Also, specify whether depths are below ground surface, relative to Kelly bushing, etc.

CERTIFICATION: This form must be signed and dated by either: a responsible corporate officer for a corporation, by a general partner for a partnership, by the proprietor of a sole proprietorship, or by a principal executive or ranking elected official for a public agency.

PAPERWORK REDUCTION ACT NOTICE: The public reporting and recordkeeping burden for this collection of information is estimated to average between 6.0 and 7.9 hours per response, depending on the injection well class. Burden means the total time, effort, or financial resource expended by persons to generate, maintain, retain, or disclose or provide information to or for a Federal Agency. This includes the time needed to review instructions; develop, acquire, install, and utilize technology and systems for the purposes of collecting, validating, and verifying information, processing and maintaining information, and disclosing and providing information; adjust the existing ways to comply with any previously applicable instructions and requirements; train personnel to be able to respond to the collection of information; search data sources; complete and review the collection of information; and, transmit or otherwise disclose the information. An agency may not conduct or sponsor, and a person is not required to respond to, a collection of information unless it displays a currently valid OMB control number. Send comments on the Agency's need for this information, the accuracy of the provided burden estimates, and any suggested methods for minimizing respondent burden, including the use of automated collection techniques to Director, Collection Strategies Division, U.S. Environmental Protection Agency (2822), 1200 Pennsylvania Ave., NW., Washington, D.C. 20460. Include the OMB control number in any correspondence. Do not send the completed forms to this address.

PROPOSED DESIGN
INJECTION AND RECOVERY WELL

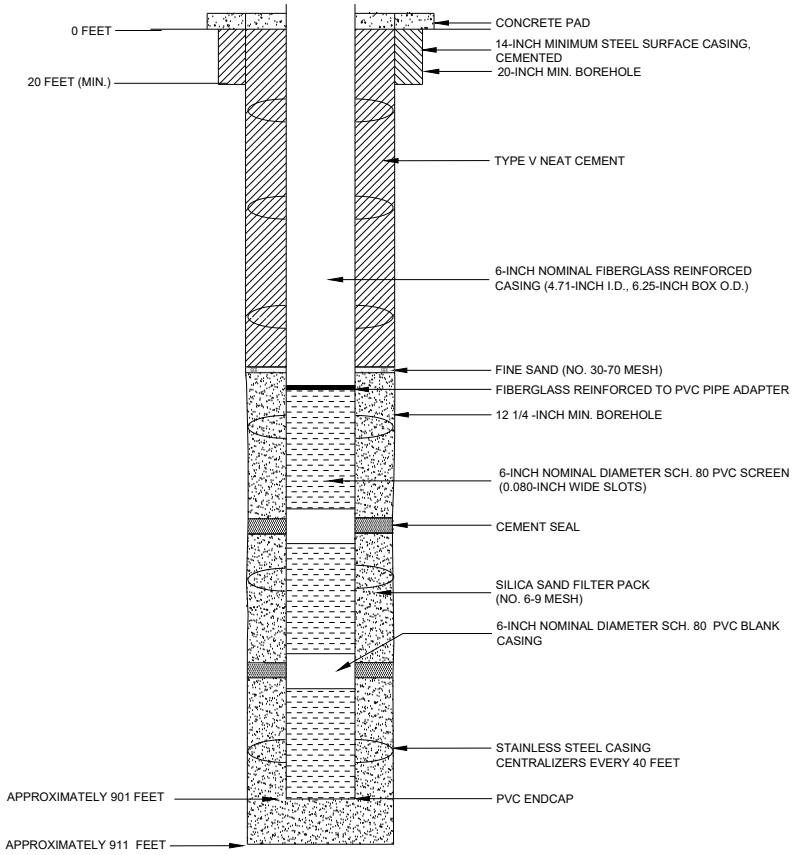

PROPOSED PLUGGING AND
ABANDONMENT
INJECTION AND RECOVERY WELL

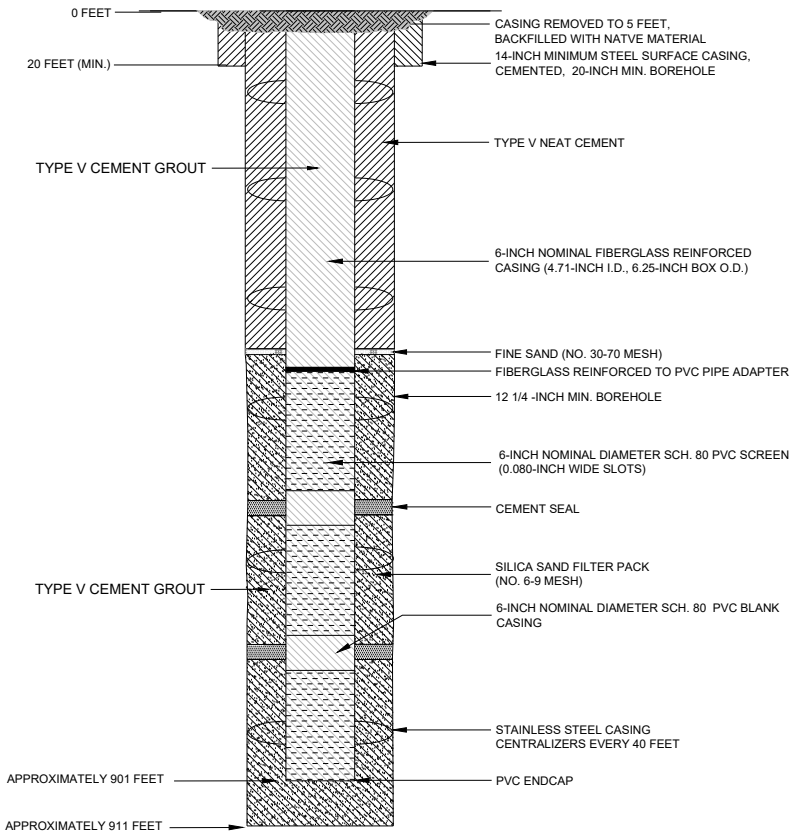

NOTES

1. WELL DESIGN DETAILS ARE BASED ON CORE HOLE AND WELL LOG RECORDS.

HALEY ALDRICH

FLORENCE COPPER, INC.
FLORENCE, ARIZONA

ABANDONMENT SCHEMATIC
RESOURCE BLOCK 71
TYPICAL INJECTION AND
RECOVERY WELL

SCALE: AS SHOWN
JULY 2019

FIGURE E-35

TABLE E-35
WELLS WITHIN RESOURCE BLOCK 71
FLORENCE COPPER PROJECT
FLORENCE, ARIZONA

Well Number	Easting	Northing	Resource Block	Depth to Top of Bedrock (ft bgs)	Depth to Top of Injection Zone (ft bgs)	Depth to Bottom of Injection Zone (ft bgs)
1642	848189	745000	71	433	473	901
1643	848260	745071	71	433	473	901
1644	848331	745141	71	433	473	901
1645	848402	745212	71	433	473	901
1649	848331	745212	71	433	473	901
1650	848260	745141	71	433	473	901
1651	848189	745071	71	433	473	901
1660	848119	745000	71	433	473	901
1769	848119	744929	71	433	473	901
1770	848048	744929	71	433	473	901
2038	847977	745283	71	433	473	901
2039	847977	745212	71	433	473	901
2040	848119	745071	71	433	473	901
2041	848189	745141	71	433	473	901
2042	848260	745212	71	433	473	901
2043	848331	745283	71	433	473	901
2045	848260	745283	71	433	473	901
2046	848189	745212	71	433	473	901
2047	848119	745141	71	433	473	901
2048	848049	745140	71	433	473	901
2049	848119	745212	71	433	473	901
2050	848048	745212	71	433	473	901
2051	848260	745354	71	433	473	901
2052	848189	745348	71	433	473	901
2053	848189	745283	71	433	473	901
2054	848119	745283	71	433	473	901
2063	847977	745000	71	433	473	901
2064	847977	745071	71	433	473	901
2071	847907	745141	71	433	473	901
2072	847977	745141	71	433	473	901
2073	847907	745071	71	433	473	901
2079	847836	745212	71	433	473	901
2080	847907	745212	71	433	473	901
2081	847836	745141	71	433	473	901
2084	847836	745264	71	433	473	901
2085	847765	745212	71	433	473	901
2089	848048	745071	71	433	473	901
2090	848048	745000	71	433	473	901
2142	847976	745423	71	433	473	901

TABLE E-35
WELLS WITHIN RESOURCE BLOCK 71
FLORENCE COPPER PROJECT
FLORENCE, ARIZONA

Well Number	Easting	Northing	Resource Block	Depth to Top of Bedrock (ft bgs)	Depth to Top of Injection Zone (ft bgs)	Depth to Bottom of Injection Zone (ft bgs)
2169	848047	745423	71	433	473	901
2170	848118	745423	71	433	473	901
2171	848118	745493	71	433	473	901
2172	848047	745493	71	433	473	901
2174	847976	745368	71	433	473	901
2175	847906	745352	71	433	473	901
2176	848047	745381	71	433	473	901
2196	847906	745265	71	433	473	901
2199	848047	745281	71	433	473	901

Notes:

ft bgs = feet below ground surface

OMB No. 2040-0042 Approval Expires 4/30/2022

United States Environmental Protection Agency

WELL REWORK RECORD, PLUGGING AND ABANDONMENT PLAN, OR PLUGGING AND ABANDONMENT AFFIDAVIT

Name and Address, Phone Number and/or Email of Permittee

Florence Copper Project
1575 W Hunt Hwy,
Florence, AZ 85132

Permit or EPA ID Number	API Number	Full Well Name
R9UIC-AZ3-FY11-1		Block 72 Wells - See Attached Table E-36

State	County
Arizona	Pinal

Locate well in two directions from nearest lines of quarter section and drilling unit

Surface Location

SE 1/4 of SW 1/4 of Section 28 Township 4S Range 9E

_____ ft. from (N/S) _____ Line of quarter section

_____ ft. from (E/W) _____ Line of quarter section.

Latitude 33.047660

Longitude -111.431131

See Attached Table for Individual Well Coordinates.

Well Class	Timing of Action (pick one)	Type of Action (pick one)
☐ Class I ☐ Class II ☑ Class III ☐ Class V	☑ Notice Prior to Work Date Expected to Commence January 2027 ☐ Report After Work Date Work Ended	☐ Well Rework ☑ Plugging and Abandonment ☐ Conversion to a Non-Injection Well

Provide a narrative description of the work planned to be performed, or that was performed. Use additional pages as necessary. See instructions.

This plugging and abandonment applies to wells Class III wells to be constructed in block 72. There are 49 Class III multi-use injection/ recovery wells, planned for construction in this block. The injection and recovery wells will be of uniform design, and will be used for injection and recovery on an alternate basis. Some of the injection and recovery wells will be used as perimeter and observation wells prior to well field build-out.

The work performed includes plugging and abandonment of the Class III wells in resource block 72. Plugging and abandonment will be accomplished following procedures defined in Attachment E of the application. Plugging and abandonment details are shown on the attached Figure E-36.

Certification

I certify under the penalty of law that I have personally examined and am familiar with the information submitted in this document and all attachments and that, based on my inquiry of those individuals immediately responsible for obtaining the information, I believe that the information is true, accurate, and complete. I am aware that there are significant penalties for submitting false information, including the possibliity of fine and imprisonment. (Ref. 40 CFR § 144.32)

Name and Official Title *(Please type or print)*	Signature	Date Signed
Dan Johnson, VP - General Manager		10/3/2019

INSTRUCTIONS FOR FORM 7520-19

This form replaces forms 7520-12 and 7520-14. Use this form only when work is planned or has occurred that affects the well's construction or operation as an injection well, including work on the casing, tubing or packer (or for shallow Class V wells, the subsurface fluid emplacement network). Use one form per injection well. While reports or other information developed by contractors or service companies may be attached, this form must be signed by a responsible entity as described at 40 CFR 144.32. Note: operators closing Class V wells should use Form 7520-17.

NAME, ADDRESS, PHONE AND/OR EMAIL OF PERMITTEE: Enter the name and street address, city/town, state, and ZIP code of the permittee. Also provide an email address (if available) and/or a phone number.

PERMIT OR EPA ID NUMBER: Enter the well identification number or permit number assigned to the well by the EPA or the permitting authority.

API NUMBER: Enter the number assigned by the local jurisdiction (usually a State Oil and Gas Agency) using the American Petroleum Institute standard numbering system.

FULL WELL NAME: Enter the full name of the well or project.

Enter the **STATE** and **COUNTY** where the well is located. For States that do not have counties, use the name of that State's equivalent jurisdiction at a more local level.

WELL LOCATION: Fill in the complete township, range, and section to the nearest quarter-quarter section. A township is north or south of the baseline, and a range is east or west of the principal meridian (e.g., T12N, R34W). Also include the distance, in feet, from the nearest north or south line and nearest east or west line of the quarter-section. Also, enter the **latitude** and **longitude** of the well in decimal degrees, to five or six places if possible; be sure to include a negative sign for the longitude of a well in the Western Hemisphere and a negative sign for the latitude of a well in the Southern Hemisphere.

Enter the **WELL CLASS,** i.e., the class of injection well as defined in 40 CFR 144.6.

TIMING OF THE ACTION: Check ***Notice prior to work*** if the activity has not yet occurred (i.e., is planned). Check ***Report after work*** if the activity described has already occurred. As appropriate, include the date the activity is expected to start or the date the activity was completed. (Note this may not be available, e.g., for a plugging plan submitted with a permit application.)

TYPE OF ACTION: Check the appropriate box to describe the kind of activity being reported. Check ***Well Rework*** for work that was/will be performed on the well after it has already been in operation as an injection well. Check ***Plugging and Abandonment*** to report on plans for or descriptions of final closure/plugging after use as an injection well. Check ***Conversion to a Non-Injection Well*** if the well is to be converted to something other than an injection well.

Provide a **NARRATIVE DESCRIPTION** of the work planned to be performed, or that was performed. The narrative should include a description of the main procedures planned or that occurred during the work activity. A service company report, daily report, or similar document may be attached if it includes all the requested information and is clear and legible.

For well reworks, include the following information: The reason for the well rework; depths of activity; type of activity; changes to injection well configuration, well casing, or cement behind casing; any plug added to the well and its depth; any newly drilled interval and its depth; method(s) to demonstrate that the well has mechanical integrity (as applicable); and any deviations from the approved rework plan (as applicable).

For a well plugging plan, include the following information: Reason for the well plugging; number of plugs placed, and their depths; materials used as plugs (e.g., cast iron bridge plug, cement, cement retainer); method to set plugs; and wait-on-cement times, if any. Also provide one or more cost estimates from an independent firm in the business of plugging and abandoning wells to plug the well as described in the plan.

For well plugging affidavit, include the following information: Reason for the well plugging; number of plugs placed, and their depths; materials used as plugs (e.g., cast iron bridge plug, cement, cement retainer); method to set plugs; wait-on-cement times, if any; and any deviations from the approved plugging plan (if applicable).

For conversion to a non-injection well, include the following information: Depths of activity; type of activity; changes to injection well configuration, well casing, or cement behind casing; any plug added to the well and its depth; any newly drilled interval and its depth; depths of new perforations; and method(s) to demonstrate that the well has mechanical integrity (as applicable).

For all of the above activities, include a well sketch depicting the work, results of well tests/logging performed, service company tickets, and any other available information demonstrating how the work was/is to be performed. Also, specify whether depths are below ground surface, relative to Kelly bushing, etc.

CERTIFICATION: This form must be signed and dated by either: a responsible corporate officer for a corporation, by a general partner for a partnership, by the proprietor of a sole proprietorship, or by a principal executive or ranking elected official for a public agency.

PAPERWORK REDUCTION ACT NOTICE: The public reporting and recordkeeping burden for this collection of information is estimated to average between 6.0 and 7.9 hours per response, depending on the injection well class. Burden means the total time, effort, or financial resource expended by persons to generate, maintain, retain, or disclose or provide information to or for a Federal Agency. This includes the time needed to review instructions; develop, acquire, install, and utilize technology and systems for the purposes of collecting, validating, and verifying information, processing and maintaining information, and disclosing and providing information; adjust the existing ways to comply with any previously applicable instructions and requirements; train personnel to be able to respond to the collection of information; search data sources; complete and review the collection of information; and, transmit or otherwise disclose the information. An agency may not conduct or sponsor, and a person is not required to respond to, a collection of information unless it displays a currently valid OMB control number. Send comments on the Agency's need for this information, the accuracy of the provided burden estimates, and any suggested methods for minimizing respondent burden, including the use of automated collection techniques to Director, Collection Strategies Division, U.S. Environmental Protection Agency (2822), 1200 Pennsylvania Ave., NW., Washington, D.C. 20460. Include the OMB control number in any correspondence. Do not send the completed forms to this address.

PROPOSED DESIGN
INJECTION AND RECOVERY WELL

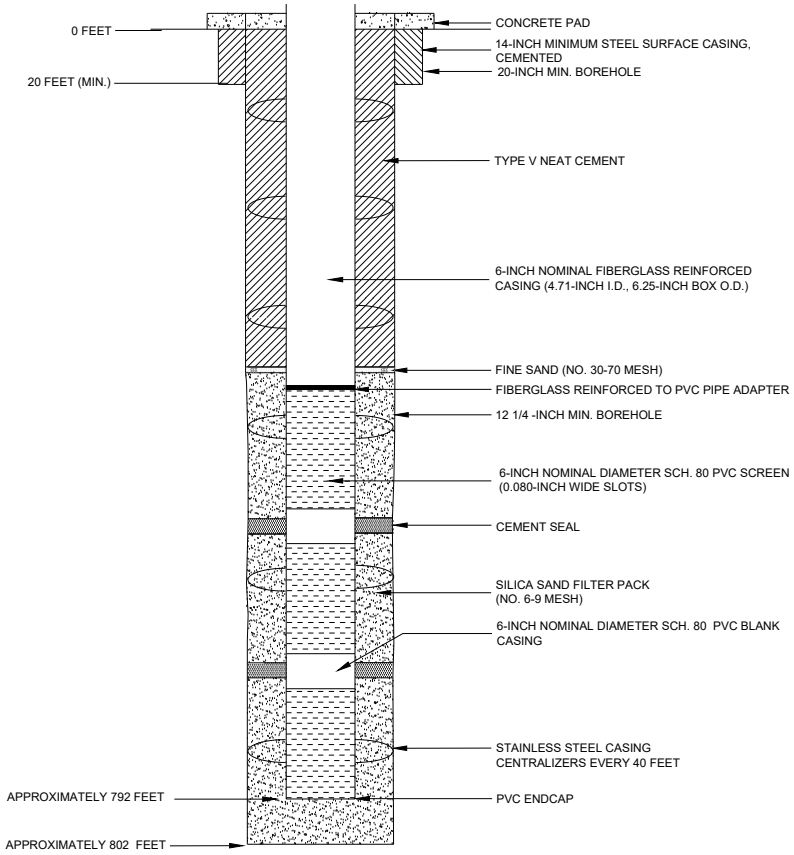

PROPOSED PLUGGING AND
ABANDONMENT
INJECTION AND RECOVERY WELL

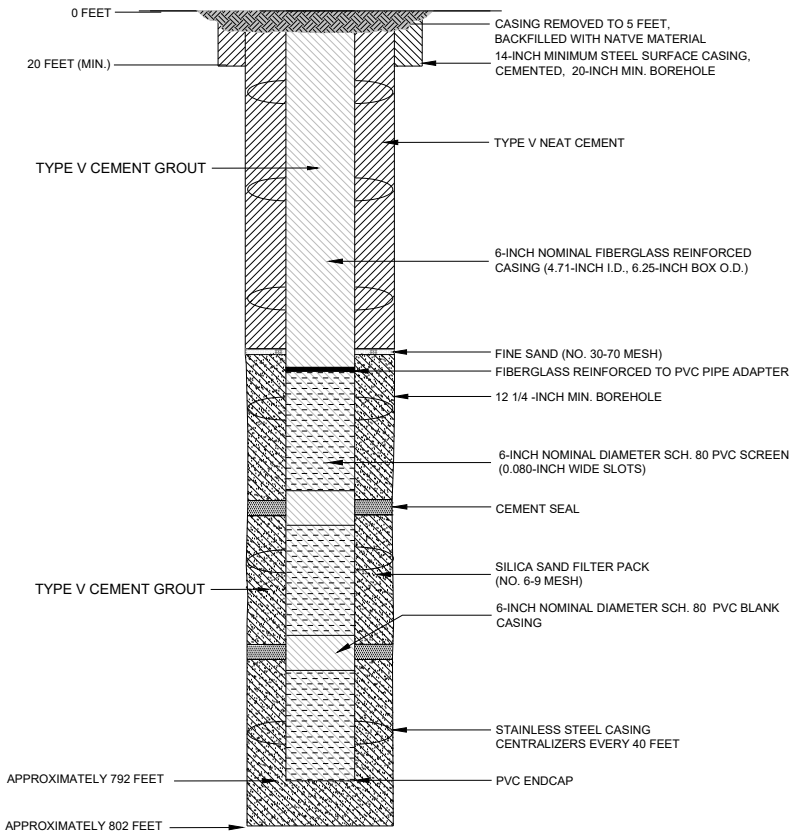

NOTES

1. WELL DESIGN DETAILS ARE BASED ON CORE HOLE AND WELL LOG RECORDS.

HALEY ALDRICH

FLORENCE COPPER, INC.
FLORENCE, ARIZONA

ABANDONMENT SCHEMATIC
RESOURCE BLOCK 72
TYPICAL INJECTION AND
RECOVERY WELL

SCALE: AS SHOWN
JULY 2019

FIGURE E-36

TABLE E-36
WELLS WITHIN RESOURCE BLOCK 72
FLORENCE COPPER PROJECT
FLORENCE, ARIZONA

Well Number	Easting	Northing	Resource Block	Depth to Top of Bedrock (ft bgs)	Depth to Top of Injection Zone (ft bgs)	Depth to Bottom of Injection Zone (ft bgs)
1256	848755	744929	72	381	421	792
1273	848826	744929	72	381	421	792
1274	848897	745000	72	381	421	792
1275	848897	745071	72	381	421	792
1276	848826	745000	72	381	421	792
1486	848967	745071	72	381	421	792
1487	849038	745141	72	381	421	792
1488	849038	745212	72	381	421	792
1489	848967	745141	72	381	421	792
1491	849109	745212	72	381	421	792
1681	848684	745424	72	381	421	792
1682	848755	745424	72	381	421	792
1683	848755	745495	72	381	421	792
1686	848684	745000	72	381	421	792
1687	848684	745071	72	381	421	792
1695	848614	745141	72	381	421	792
1696	848684	745141	72	381	421	792
1697	848614	745071	72	381	421	792
1705	848543	745212	72	381	421	792
1707	848543	745141	72	381	421	792
1712	848543	745283	72	381	421	792
1713	848472	745212	72	381	421	792
1718	848684	745354	72	381	421	792
1719	848614	745354	72	381	421	792
1720	848684	745283	72	381	421	792
1721	848614	745283	72	381	421	792
1722	848684	745212	72	381	421	792
1725	848755	745071	72	381	421	792
1726	848755	745000	72	381	421	792
1727	848756	745141	72	381	421	792
1728	848755	745212	72	381	421	792
1729	848755	745354	72	381	421	792
1730	848755	745283	72	381	421	792
1740	848897	745424	72	381	421	792
1741	848826	745495	72	381	421	792
1745	848826	745424	72	381	421	792
1750	848826	745071	72	381	421	792
1751	848897	745141	72	381	421	792
1752	848967	745212	72	381	421	792

TABLE E-36
WELLS WITHIN RESOURCE BLOCK 72
FLORENCE COPPER PROJECT
FLORENCE, ARIZONA

Well Number	Easting	Northing	Resource Block	Depth to Top of Bedrock (ft bgs)	Depth to Top of Injection Zone (ft bgs)	Depth to Bottom of Injection Zone (ft bgs)
1753	848826	745212	72	381	421	792
1754	848897	745283	72	381	421	792
1755	848967	745283	72	381	421	792
1756	848897	745212	72	381	421	792
1757	848826	745141	72	381	421	792
1758	848897	745353	72	381	421	792
1759	848826	745283	72	381	421	792
1760	848826	745353	72	381	421	792
1763	848967	745353	72	381	421	792
1764	849038	745283	72	381	421	792

Notes:

ft bgs = feet below ground surface

OMB No. 2040-0042 Approval Expires 4/30/2022

United States Environmental Protection Agency

WELL REWORK RECORD, PLUGGING AND ABANDONMENT PLAN, OR PLUGGING AND ABANDONMENT AFFIDAVIT

Name and Address, Phone Number and/or Email of Permittee

Florence Copper Project
1575 W Hunt Hwy,
Florence, AZ 85132

Permit or EPA ID Number	API Number	Full Well Name
R9UIC-AZ3-FY11-1		Block 73 Wells - See Attached Table E-37

State	County
Arizona	Pinal

Locate well in two directions from nearest lines of quarter section and drilling unit

Surface Location

SW 1/4 of SE 1/4 of Section 28 Township 4S Range 9E

_____ ft. from (N/S) _____ Line of quarter section

_____ ft. from (E/W) _____ Line of quarter section.

Latitude 33.047604

Longitude -111.428879

See Attached Table for Individual Well Coordinates.

Well Class	Timing of Action (pick one)	Type of Action (pick one)
☐ Class I ☐ Class II ☑ Class III ☐ Class V	☑ Notice Prior to Work Date Expected to Commence January 2027 ☐ Report After Work Date Work Ended	☐ Well Rework ☑ Plugging and Abandonment ☐ Conversion to a Non-Injection Well

Provide a narrative description of the work planned to be performed, or that was performed. Use additional pages as necessary. See instructions.

This plugging and abandonment applies to wells Class III wells to be constructed in block 73. There are 50 Class III multi-use injection/ recovery wells, planned for construction in this block. The injection and recovery wells will be of uniform design, and will be used for injection and recovery on an alternate basis. Some of the injection and recovery wells will be used as perimeter and observation wells prior to well field build-out.

The work performed includes plugging and abandonment of the Class III wells in resource block 73. Plugging and abandonment will be accomplished following procedures defined in Attachment E of the application. Plugging and abandonment details are shown on the attached Figure E-37.

Certification

I certify under the penalty of law that I have personally examined and am familiar with the information submitted in this document and all attachments and that, based on my inquiry of those individuals immediately responsible for obtaining the information, I believe that the information is true, accurate, and complete. I am aware that there are significant penalties for submitting false information, including the possibliity of fine and imprisonment. (Ref. 40 CFR § 144.32)

Name and Official Title *(Please type or print)*	Signature	Date Signed
Dan Johnson, VP - General Manager		10/3/2019

INSTRUCTIONS FOR FORM 7520-19

This form replaces forms 7520-12 and 7520-14. Use this form only when work is planned or has occurred that affects the well's construction or operation as an injection well, including work on the casing, tubing or packer (or for shallow Class V wells, the subsurface fluid emplacement network). Use one form per injection well. While reports or other information developed by contractors or service companies may be attached, this form must be signed by a responsible entity as described at 40 CFR 144.32. Note: operators closing Class V wells should use Form 7520-17.

NAME, ADDRESS, PHONE AND/OR EMAIL OF PERMITTEE: Enter the name and street address, city/town, state, and ZIP code of the permittee. Also provide an email address (if available) and/or a phone number.

PERMIT OR EPA ID NUMBER: Enter the well identification number or permit number assigned to the well by the EPA or the permitting authority.

API NUMBER: Enter the number assigned by the local jurisdiction (usually a State Oil and Gas Agency) using the American Petroleum Institute standard numbering system.

FULL WELL NAME: Enter the full name of the well or project.

Enter the **STATE** and **COUNTY** where the well is located. For States that do not have counties, use the name of that State's equivalent jurisdiction at a more local level.

WELL LOCATION: Fill in the complete township, range, and section to the nearest quarter-quarter section. A township is north or south of the baseline, and a range is east or west of the principal meridian (e.g., T12N, R34W). Also include the distance, in feet, from the nearest north or south line and nearest east or west line of the quarter-section. Also, enter the **latitude** and **longitude** of the well in decimal degrees, to five or six places if possible; be sure to include a negative sign for the longitude of a well in the Western Hemisphere and a negative sign for the latitude of a well in the Southern Hemisphere.

Enter the **WELL CLASS,** i.e., the class of injection well as defined in 40 CFR 144.6.

TIMING OF THE ACTION: Check ***Notice prior to work*** if the activity has not yet occurred (i.e., is planned). Check ***Report after work*** if the activity described has already occurred. As appropriate, include the date the activity is expected to start or the date the activity was completed. (Note this may not be available, e.g., for a plugging plan submitted with a permit application.)

TYPE OF ACTION: Check the appropriate box to describe the kind of activity being reported. Check ***Well Rework*** for work that was/will be performed on the well after it has already been in operation as an injection well. Check ***Plugging and Abandonment*** to report on plans for or descriptions of final closure/plugging after use as an injection well. Check ***Conversion to a Non-Injection Well*** if the well is to be converted to something other than an injection well.

Provide a **NARRATIVE DESCRIPTION** of the work planned to be performed, or that was performed. The narrative should include a description of the main procedures planned or that occurred during the work activity. A service company report, daily report, or similar document may be attached if it includes all the requested information and is clear and legible.

For well reworks, include the following information: The reason for the well rework; depths of activity; type of activity; changes to injection well configuration, well casing, or cement behind casing; any plug added to the well and its depth; any newly drilled interval and its depth; method(s) to demonstrate that the well has mechanical integrity (as applicable); and any deviations from the approved rework plan (as applicable).

For a well plugging plan, include the following information: Reason for the well plugging; number of plugs placed, and their depths; materials used as plugs (e.g., cast iron bridge plug, cement, cement retainer); method to set plugs; and wait-on-cement times, if any. Also provide one or more cost estimates from an independent firm in the business of plugging and abandoning wells to plug the well as described in the plan.

For well plugging affidavit, include the following information: Reason for the well plugging; number of plugs placed, and their depths; materials used as plugs (e.g., cast iron bridge plug, cement, cement retainer); method to set plugs; wait-on-cement times, if any; and any deviations from the approved plugging plan (if applicable).

For conversion to a non-injection well, include the following information: Depths of activity; type of activity; changes to injection well configuration, well casing, or cement behind casing; any plug added to the well and its depth; any newly drilled interval and its depth; depths of new perforations; and method(s) to demonstrate that the well has mechanical integrity (as applicable).

For all of the above activities, include a well sketch depicting the work, results of well tests/logging performed, service company tickets, and any other available information demonstrating how the work was/is to be performed. Also, specify whether depths are below ground surface, relative to Kelly bushing, etc.

CERTIFICATION: This form must be signed and dated by either: a responsible corporate officer for a corporation, by a general partner for a partnership, by the proprietor of a sole proprietorship, or by a principal executive or ranking elected official for a public agency.

PAPERWORK REDUCTION ACT NOTICE: The public reporting and recordkeeping burden for this collection of information is estimated to average between 6.0 and 7.9 hours per response, depending on the injection well class. Burden means the total time, effort, or financial resource expended by persons to generate, maintain, retain, or disclose or provide information to or for a Federal Agency. This includes the time needed to review instructions; develop, acquire, install, and utilize technology and systems for the purposes of collecting, validating, and verifying information, processing and maintaining information, and disclosing and providing information; adjust the existing ways to comply with any previously applicable instructions and requirements; train personnel to be able to respond to the collection of information; search data sources; complete and review the collection of information; and, transmit or otherwise disclose the information. An agency may not conduct or sponsor, and a person is not required to respond to, a collection of information unless it displays a currently valid OMB control number. Send comments on the Agency's need for this information, the accuracy of the provided burden estimates, and any suggested methods for minimizing respondent burden, including the use of automated collection techniques to Director, Collection Strategies Division, U.S. Environmental Protection Agency (2822), 1200 Pennsylvania Ave., NW., Washington, D.C. 20460. Include the OMB control number in any correspondence. Do not send the completed forms to this address.

PROPOSED DESIGN
INJECTION AND RECOVERY WELL

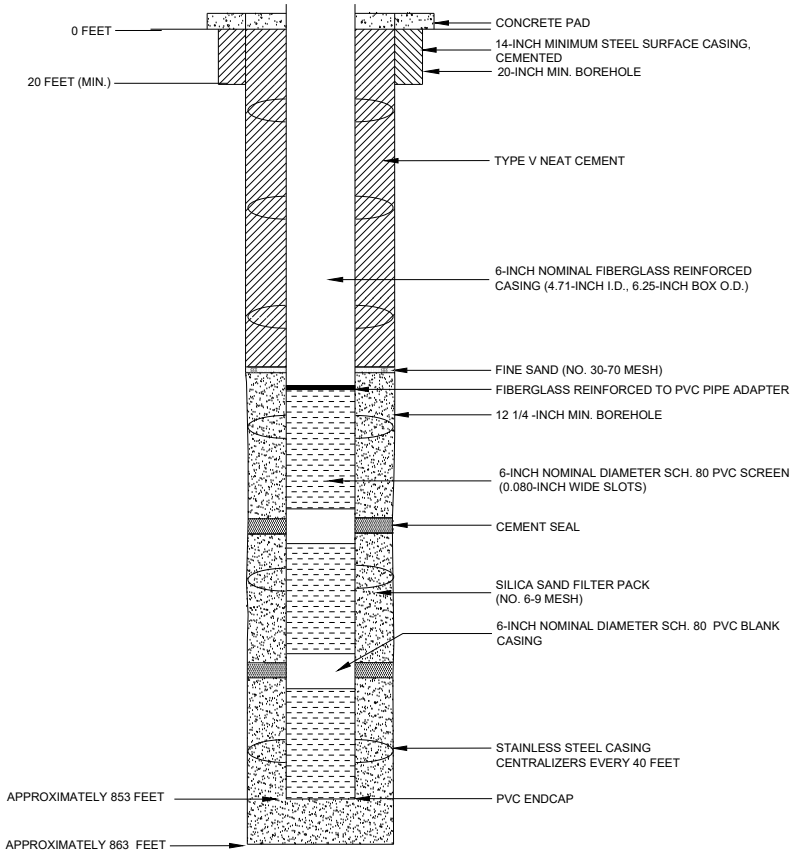

PROPOSED PLUGGING AND
ABANDONMENT
INJECTION AND RECOVERY WELL

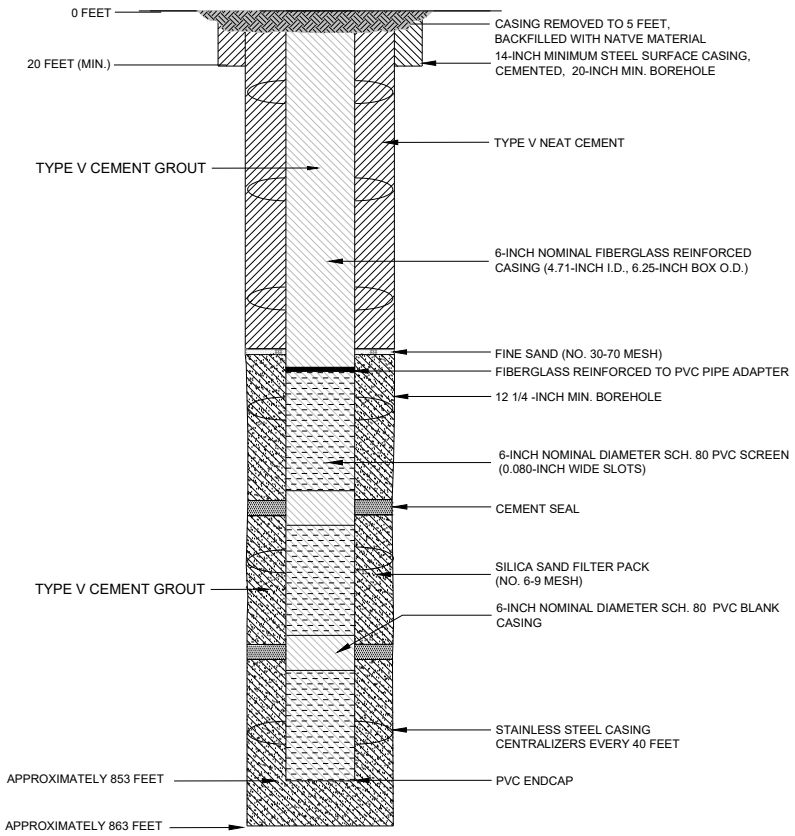

NOTES

1. WELL DESIGN DETAILS ARE BASED ON CORE HOLE AND WELL LOG RECORDS.

HALEY ALDRICH

FLORENCE COPPER, INC.
FLORENCE, ARIZONA

ABANDONMENT SCHEMATIC
RESOURCE BLOCK 73
TYPICAL INJECTION AND
RECOVERY WELL

SCALE: AS SHOWN
JULY 2019

FIGURE E-37

TABLE E-37
WELLS WITHIN RESOURCE BLOCK 73
FLORENCE COPPER PROJECT
FLORENCE, ARIZONA

Well Number	Easting	Northing	Resource Block	Depth to Top of Bedrock (ft bgs)	Depth to Top of Injection Zone (ft bgs)	Depth to Bottom of Injection Zone (ft bgs)
1091	849816	745212	73	366	406	853
1100	849533	744929	73	366	406	853
1101	849604	745000	73	366	406	853
1102	849674	745071	73	366	406	853
1103	849745	745141	73	366	406	853
1109	849745	745212	73	366	406	853
1110	849674	745141	73	366	406	853
1111	849604	745071	73	366	406	853
1112	849533	745000	73	366	406	853
1113	849462	744929	73	366	406	853
1500	849604	745424	73	366	406	853
1501	849533	745495	73	366	406	853
1502	849674	745353	73	366	406	853
1503	849745	745283	73	366	406	853
1504	849462	745424	73	366	406	853
1505	849533	745424	73	366	406	853
1506	849462	745495	73	366	406	853
1507	849392	745424	73	366	406	853
1515	849462	745000	73	366	406	853
1516	849533	745071	73	366	406	853
1517	849604	745141	73	366	406	853
1518	849674	745212	73	366	406	853
1520	849391	745071	73	366	406	853
1521	849462	745141	73	366	406	853
1522	849533	745212	73	366	406	853
1523	849604	745283	73	366	406	853
1524	849674	745283	73	366	406	853
1525	849604	745212	73	366	406	853
1526	849533	745141	73	366	406	853
1527	849462	745071	73	366	406	853
1528	849391	745000	73	366	406	853
1530	849604	745354	73	366	406	853
1531	849533	745283	73	366	406	853
1532	849462	745212	73	366	406	853
1533	849391	745141	73	366	406	853
1534	849321	745071	73	366	406	853
1537	849321	745141	73	366	406	853
1538	849391	745212	73	366	406	853
1539	849462	745283	73	366	406	853

TABLE E-37
WELLS WITHIN RESOURCE BLOCK 73
FLORENCE COPPER PROJECT
FLORENCE, ARIZONA

Well Number	Easting	Northing	Resource Block	Depth to Top of Bedrock (ft bgs)	Depth to Top of Injection Zone (ft bgs)	Depth to Bottom of Injection Zone (ft bgs)
1540	849533	745354	73	366	406	853
1541	849462	745354	73	366	406	853
1542	849391	745283	73	366	406	853
1543	849321	745212	73	366	406	853
1544	849250	745141	73	366	406	853
1553	849250	745212	73	366	406	853
1554	849179	745212	73	366	406	853
1555	849391	745354	73	366	406	853
1556	849321	745353	73	366	406	853
1557	849321	745283	73	366	406	853
1558	849250	745283	73	366	406	853

Notes:

ft bgs = feet below ground surface

OMB No. 2040-0042 Approval Expires 4/30/2022

United States Environmental Protection Agency

WELL REWORK RECORD, PLUGGING AND ABANDONMENT PLAN, OR PLUGGING AND ABANDONMENT AFFIDAVIT

Name and Address, Phone Number and/or Email of Permittee

Florence Copper Project
1575 W Hunt Hwy,
Florence, AZ 85132

Permit or EPA ID Number	API Number	Full Well Name
R9UIC-AZ3-FY11-1		Block 74 Wells - See Attached Table E-38

State	County
Arizona	Pinal

Locate well in two directions from nearest lines of quarter section and drilling unit

Surface Location

SW 1/4 of SE 1/4 of Section 28 Township 4S Range 9E

_____ ft. from (N/S) _____ Line of quarter section

_____ ft. from (E/W) _____ Line of quarter section.

Latitude 33.047906

Longitude -111.427022

See Attached Table for Individual Well Coordinates.

Well Class	Timing of Action (pick one)	Type of Action (pick one)
☐ Class I ☐ Class II ☑ Class III ☐ Class V	☑ Notice Prior to Work Date Expected to Commence January 2027 ☐ Report After Work Date Work Ended	☐ Well Rework ☑ Plugging and Abandonment ☐ Conversion to a Non-Injection Well

Provide a narrative description of the work planned to be performed, or that was performed. Use additional pages as necessary. See instructions.

This plugging and abandonment applies to wells Class III wells to be constructed in block 74. There are 18 Class III multi-use injection/ recovery wells, 2 dedicated Class III observation, and 4 Class III perimeter wells planned for construction in this block. The injection and recovery wells will be of uniform design, and will be used for injection and recovery on an alternate basis. Some of the injection and recovery wells will be used as perimeter and observation wells prior to well field build-out. The dedicated perimeter observation well will have a design and depth similar to the injection and recovery wells, but will not have a segmented well screen.

The work performed includes plugging and abandonment of the Class III wells in resource block 74. Plugging and abandonment will be accomplished following procedures defined in Attachment E of the application. Plugging and abandonment details are shown on the attached Figures E-38a and E-38b.

Certification

I certify under the penalty of law that I have personally examined and am familiar with the information submitted in this document and all attachments and that, based on my inquiry of those individuals immediately responsible for obtaining the information, I believe that the information is true, accurate, and complete. I am aware that there are significant penalties for submitting false information, including the possibliity of fine and imprisonment. (Ref. 40 CFR § 144.32)

Name and Official Title *(Please type or print)*	Signature	Date Signed
Dan Johnson, VP - General Manager		10/3/2019

INSTRUCTIONS FOR FORM 7520-19

This form replaces forms 7520-12 and 7520-14. Use this form only when work is planned or has occurred that affects the well's construction or operation as an injection well, including work on the casing, tubing or packer (or for shallow Class V wells, the subsurface fluid emplacement network). Use one form per injection well. While reports or other information developed by contractors or service companies may be attached, this form must be signed by a responsible entity as described at 40 CFR 144.32. Note: operators closing Class V wells should use Form 7520-17.

NAME, ADDRESS, PHONE AND/OR EMAIL OF PERMITTEE: Enter the name and street address, city/town, state, and ZIP code of the permittee. Also provide an email address (if available) and/or a phone number.

PERMIT OR EPA ID NUMBER: Enter the well identification number or permit number assigned to the well by the EPA or the permitting authority.

API NUMBER: Enter the number assigned by the local jurisdiction (usually a State Oil and Gas Agency) using the American Petroleum Institute standard numbering system.

FULL WELL NAME: Enter the full name of the well or project.

Enter the **STATE** and **COUNTY** where the well is located. For States that do not have counties, use the name of that State's equivalent jurisdiction at a more local level.

WELL LOCATION: Fill in the complete township, range, and section to the nearest quarter-quarter section. A township is north or south of the baseline, and a range is east or west of the principal meridian (e.g., T12N, R34W). Also include the distance, in feet, from the nearest north or south line and nearest east or west line of the quarter-section. Also, enter the **latitude** and **longitude** of the well in decimal degrees, to five or six places if possible; be sure to include a negative sign for the longitude of a well in the Western Hemisphere and a negative sign for the latitude of a well in the Southern Hemisphere.

Enter the **WELL CLASS,** i.e., the class of injection well as defined in 40 CFR 144.6.

TIMING OF THE ACTION: Check ***Notice prior to work*** if the activity has not yet occurred (i.e., is planned). Check ***Report after work*** if the activity described has already occurred. As appropriate, include the date the activity is expected to start or the date the activity was completed. (Note this may not be available, e.g., for a plugging plan submitted with a permit application.)

TYPE OF ACTION: Check the appropriate box to describe the kind of activity being reported. Check ***Well Rework*** for work that was/will be performed on the well after it has already been in operation as an injection well. Check ***Plugging and Abandonment*** to report on plans for or descriptions of final closure/plugging after use as an injection well. Check ***Conversion to a Non-Injection Well*** if the well is to be converted to something other than an injection well.

Provide a **NARRATIVE DESCRIPTION** of the work planned to be performed, or that was performed. The narrative should include a description of the main procedures planned or that occurred during the work activity. A service company report, daily report, or similar document may be attached if it includes all the requested information and is clear and legible.

For well reworks, include the following information: The reason for the well rework; depths of activity; type of activity; changes to injection well configuration, well casing, or cement behind casing; any plug added to the well and its depth; any newly drilled interval and its depth; method(s) to demonstrate that the well has mechanical integrity (as applicable); and any deviations from the approved rework plan (as applicable).

For a well plugging plan, include the following information: Reason for the well plugging; number of plugs placed, and their depths; materials used as plugs (e.g., cast iron bridge plug, cement, cement retainer); method to set plugs; and wait-on-cement times, if any. Also provide one or more cost estimates from an independent firm in the business of plugging and abandoning wells to plug the well as described in the plan.

For well plugging affidavit, include the following information: Reason for the well plugging; number of plugs placed, and their depths; materials used as plugs (e.g., cast iron bridge plug, cement, cement retainer); method to set plugs; wait-on-cement times, if any; and any deviations from the approved plugging plan (if applicable).

For conversion to a non-injection well, include the following information: Depths of activity; type of activity; changes to injection well configuration, well casing, or cement behind casing; any plug added to the well and its depth; any newly drilled interval and its depth; depths of new perforations; and method(s) to demonstrate that the well has mechanical integrity (as applicable).

For all of the above activities, include a well sketch depicting the work, results of well tests/logging performed, service company tickets, and any other available information demonstrating how the work was/is to be performed. Also, specify whether depths are below ground surface, relative to Kelly bushing, etc.

CERTIFICATION: This form must be signed and dated by either: a responsible corporate officer for a corporation, by a general partner for a partnership, by the proprietor of a sole proprietorship, or by a principal executive or ranking elected official for a public agency.

PAPERWORK REDUCTION ACT NOTICE: The public reporting and recordkeeping burden for this collection of information is estimated to average between 6.0 and 7.9 hours per response, depending on the injection well class. Burden means the total time, effort, or financial resource expended by persons to generate, maintain, retain, or disclose or provide information to or for a Federal Agency. This includes the time needed to review instructions; develop, acquire, install, and utilize technology and systems for the purposes of collecting, validating, and verifying information, processing and maintaining information, and disclosing and providing information; adjust the existing ways to comply with any previously applicable instructions and requirements; train personnel to be able to respond to the collection of information; search data sources; complete and review the collection of information; and, transmit or otherwise disclose the information. An agency may not conduct or sponsor, and a person is not required to respond to, a collection of information unless it displays a currently valid OMB control number. Send comments on the Agency's need for this information, the accuracy of the provided burden estimates, and any suggested methods for minimizing respondent burden, including the use of automated collection techniques to Director, Collection Strategies Division, U.S. Environmental Protection Agency (2822), 1200 Pennsylvania Ave., NW., Washington, D.C. 20460. Include the OMB control number in any correspondence. Do not send the completed forms to this address.

PROPOSED DESIGN
INJECTION AND RECOVERY WELL

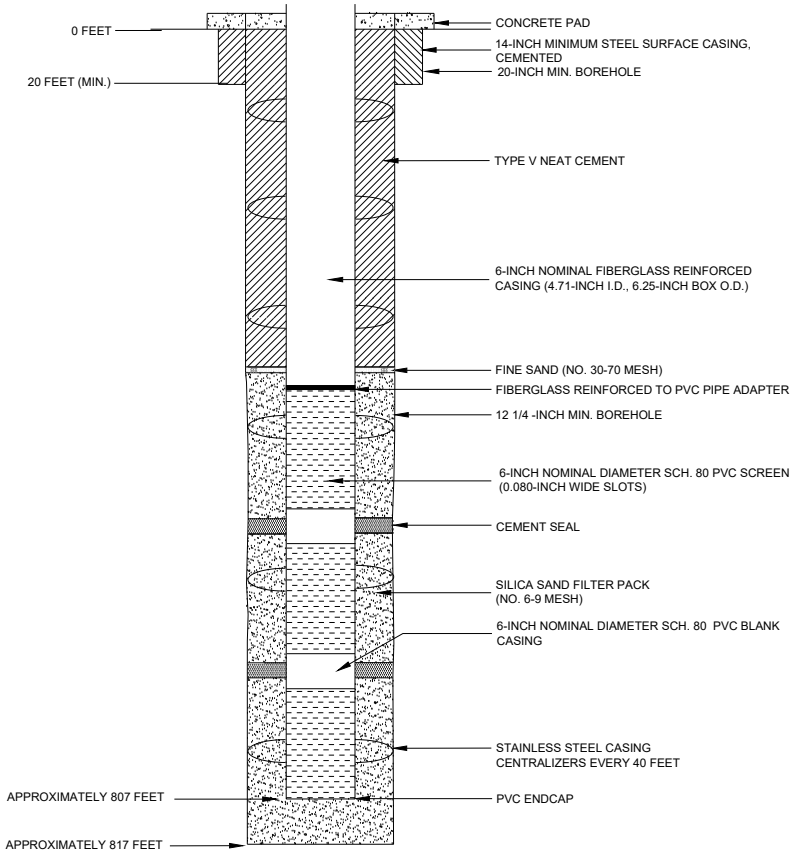

PROPOSED PLUGGING AND
ABANDONMENT
INJECTION AND RECOVERY WELL

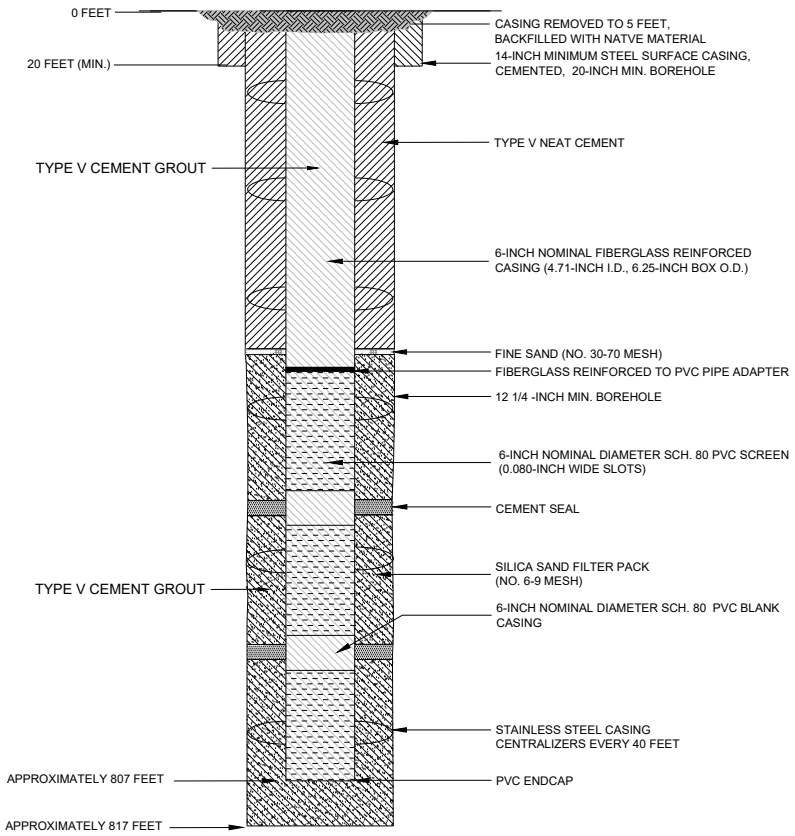

NOTES

1. WELL DESIGN DETAILS ARE BASED ON CORE HOLE AND WELL LOG RECORDS.

HALEY ALDRICH

FLORENCE COPPER, INC.
FLORENCE, ARIZONA

ABANDONMENT SCHEMATIC
RESOURCE BLOCK 74
TYPICAL INJECTION AND
RECOVERY WELL

SCALE: AS SHOWN
JULY 2019

FIGURE E-38a

Saved by: MNICHOLLS Printed: 7/25/2019 7:20 PM Sheet: HA-FIG-A-L(2)
\\HALEYALDRICH.COM\SHARE\PHX_COMMON\PROJECTS\FLORENCE COPPER\132473 FLORENCE GROUNDWATER PERMITTING\CAD\132473_000-OBSERVATION_WELL_CONSTRUCTION DIAGRAM.DWG

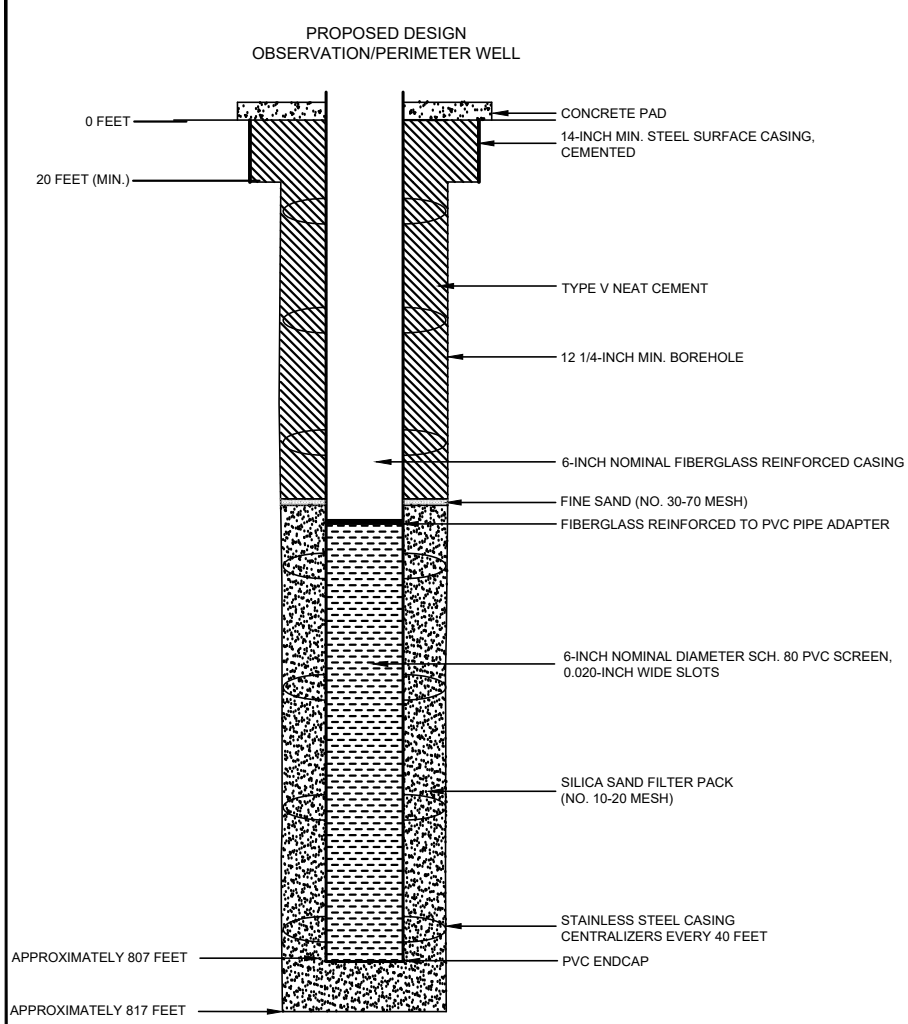

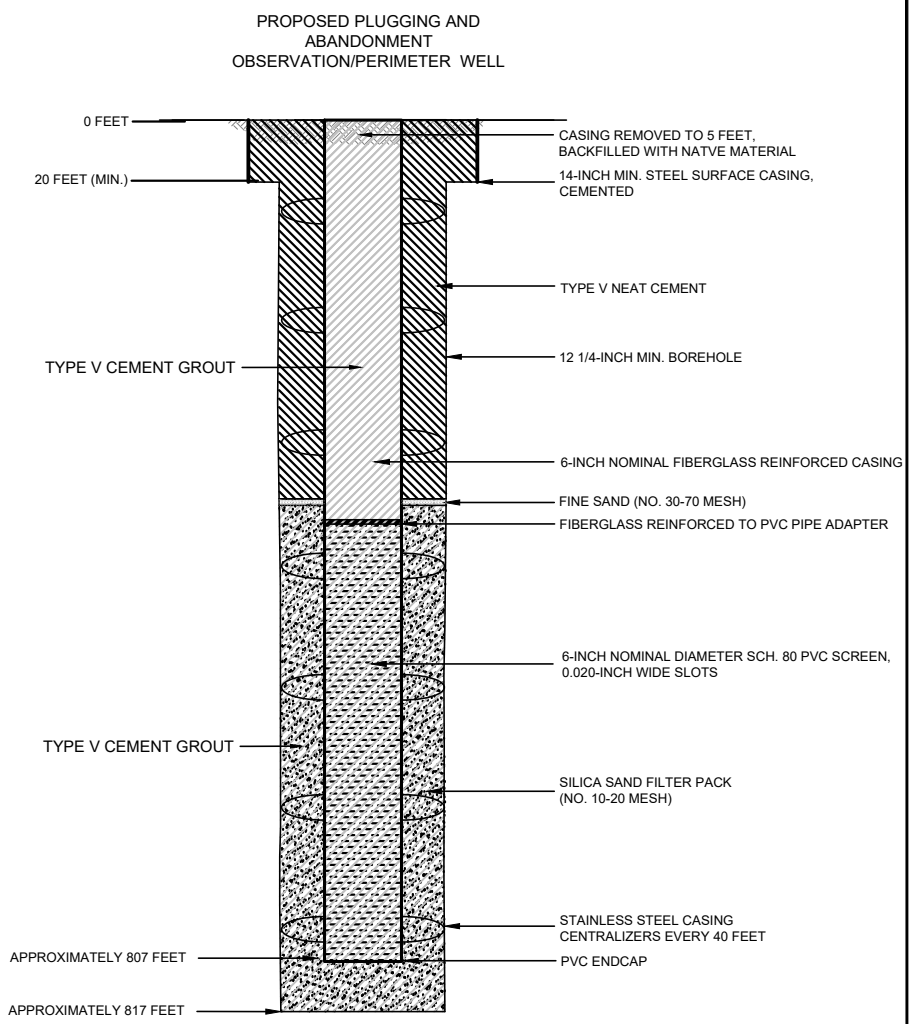

NOTES

1. WELL DESIGN DETAILS ARE BASED ON CORE HOLE AND WELL LOG RECORDS.

HALEY ALDRICH

FLORENCE COPPER, INC.
FLORENCE, ARIZONA

ABANDONMENT SCHEMATIC
RESOURCE BLOCK 74
OBSERVATION/PERIMETER WELL

JULY 2019
SCALE: AS SHOWN

FIGURE E-38b

TABLE E-38
WELLS WITHIN RESOURCE BLOCK 74
FLORENCE COPPER PROJECT
FLORENCE, ARIZONA

Well Number	Easting	Northing	Resource Block	Depth to Top of Bedrock (ft bgs)	Depth to Top of Injection Zone (ft bgs)	Depth to Bottom of Injection Zone (ft bgs)
976	850169	745495	74	356	396	807
978	850240	745424	74	356	396	807
979	850240	745495	74	356	396	807
1122	849886	745212	74	356	396	807
1185	850099	745424	74	356	396	807
1186	850169	745424	74	356	396	807
1193	850028	745141	74	356	396	807
1199	849957	745212	74	356	396	807
1200	850028	745283	74	356	396	807
1201	850099	745283	74	356	396	807
1202	850028	745212	74	356	396	807
1203	849957	745141	74	356	396	807
1204	850028	745354	74	356	396	807
1205	849957	745283	74	356	396	807
1206	850240	745354	74	356	396	807
1207	850169	745354	74	356	396	807
1208	850099	745354	74	356	396	807
1210	850169	745283	74	356	396	807
O19	850311	745354	74	356	396	807
O20	850169	745141	74	356	396	807
P36	850311	745424	74	356	396	807
P37	850240	745283	74	356	396	807
P38	850169	745212	74	356	396	807
P39	850099	745141	74	356	396	807

Notes:

ft bgs = feet below ground surface

OMB No. 2040-0042 Approval Expires 4/30/2022

United States Environmental Protection Agency

WELL REWORK RECORD, PLUGGING AND ABANDONMENT PLAN, OR PLUGGING AND ABANDONMENT AFFIDAVIT

Name and Address, Phone Number and/or Email of Permittee

Florence Copper Project
1575 W Hunt Hwy,
Florence, AZ 85132

Permit or EPA ID Number	API Number	Full Well Name
R9UIC-AZ3-FY11-1		Block 78 Wells - See Attached Table E-39

State	County
Arizona	Pinal

Locate well in two directions from nearest lines of quarter section and drilling unit

Surface Location

SW 1/4 of SW 1/4 of Section 28 Township 4S Range 9E

____ ft. from (N/S) ____ Line of quarter section

____ ft. from (E/W) ____ Line of quarter section.

Latitude 33.046722

Longitude -111.436024

See Attached Table for Individual Well Coordinates.

Well Class	Timing of Action (pick one)	Type of Action (pick one)
☐ Class I ☐ Class II ☑ Class III ☐ Class V	☑ Notice Prior to Work Date Expected to Commence January 2027 ☐ Report After Work Date Work Ended	☐ Well Rework ☑ Plugging and Abandonment ☐ Conversion to a Non-Injection Well

Provide a narrative description of the work planned to be performed, or that was performed. Use additional pages as necessary. See instructions.

This plugging and abandonment applies to wells Class III wells to be constructed in block 78. There are 4 Class III multi-use injection/ recovery wells, 2 dedicated Class III observation, and 3 Class III perimeter wells planned for construction in this block. The injection and recovery wells will be of uniform design, and will be used for injection and recovery on an alternate basis. Some of the injection and recovery wells will be used as perimeter and observation wells prior to well field build-out. The dedicated perimeter observation well will have a design and depth similar to the injection and recovery wells, but will not have a segmented well screen.

The work performed includes plugging and abandonment of the Class III wells in resource block 78. Plugging and abandonment will be accomplished following procedures defined in Attachment E of the application. Plugging and abandonment details are shown on the attached Figures E-39a and E-39b.

Certification

I certify under the penalty of law that I have personally examined and am familiar with the information submitted in this document and all attachments and that, based on my inquiry of those individuals immediately responsible for obtaining the information, I believe that the information is true, accurate, and complete. I am aware that there are significant penalties for submitting false information, including the possibliity of fine and imprisonment. (Ref. 40 CFR § 144.32)

Name and Official Title *(Please type or print)*	Signature	Date Signed
Dan Johnson, VP - General Manager		10/3/2019

INSTRUCTIONS FOR FORM 7520-19

This form replaces forms 7520-12 and 7520-14. Use this form only when work is planned or has occurred that affects the well's construction or operation as an injection well, including work on the casing, tubing or packer (or for shallow Class V wells, the subsurface fluid emplacement network). Use one form per injection well. While reports or other information developed by contractors or service companies may be attached, this form must be signed by a responsible entity as described at 40 CFR 144.32. Note: operators closing Class V wells should use Form 7520-17.

NAME, ADDRESS, PHONE AND/OR EMAIL OF PERMITTEE: Enter the name and street address, city/town, state, and ZIP code of the permittee. Also provide an email address (if available) and/or a phone number.

PERMIT OR EPA ID NUMBER: Enter the well identification number or permit number assigned to the well by the EPA or the permitting authority.

API NUMBER: Enter the number assigned by the local jurisdiction (usually a State Oil and Gas Agency) using the American Petroleum Institute standard numbering system.

FULL WELL NAME: Enter the full name of the well or project.

Enter the **STATE** and **COUNTY** where the well is located. For States that do not have counties, use the name of that State's equivalent jurisdiction at a more local level.

WELL LOCATION: Fill in the complete township, range, and section to the nearest quarter-quarter section. A township is north or south of the baseline, and a range is east or west of the principal meridian (e.g., T12N, R34W). Also include the distance, in feet, from the nearest north or south line and nearest east or west line of the quarter-section. Also, enter the **latitude** and **longitude** of the well in decimal degrees, to five or six places if possible; be sure to include a negative sign for the longitude of a well in the Western Hemisphere and a negative sign for the latitude of a well in the Southern Hemisphere.

Enter the **WELL CLASS,** i.e., the class of injection well as defined in 40 CFR 144.6.

TIMING OF THE ACTION: Check ***Notice prior to work*** if the activity has not yet occurred (i.e., is planned). Check ***Report after work*** if the activity described has already occurred. As appropriate, include the date the activity is expected to start or the date the activity was completed. (Note this may not be available, e.g., for a plugging plan submitted with a permit application.)

TYPE OF ACTION: Check the appropriate box to describe the kind of activity being reported. Check ***Well Rework*** for work that was/will be performed on the well after it has already been in operation as an injection well. Check ***Plugging and Abandonment*** to report on plans for or descriptions of final closure/plugging after use as an injection well. Check ***Conversion to a Non-Injection Well*** if the well is to be converted to something other than an injection well.

Provide a **NARRATIVE DESCRIPTION** of the work planned to be performed, or that was performed. The narrative should include a description of the main procedures planned or that occurred during the work activity. A service company report, daily report, or similar document may be attached if it includes all the requested information and is clear and legible.

For well reworks, include the following information: The reason for the well rework; depths of activity; type of activity; changes to injection well configuration, well casing, or cement behind casing; any plug added to the well and its depth; any newly drilled interval and its depth; method(s) to demonstrate that the well has mechanical integrity (as applicable); and any deviations from the approved rework plan (as applicable).

For a well plugging plan, include the following information: Reason for the well plugging; number of plugs placed, and their depths; materials used as plugs (e.g., cast iron bridge plug, cement, cement retainer); method to set plugs; and wait-on-cement times, if any. Also provide one or more cost estimates from an independent firm in the business of plugging and abandoning wells to plug the well as described in the plan.

For well plugging affidavit, include the following information: Reason for the well plugging; number of plugs placed, and their depths; materials used as plugs (e.g., cast iron bridge plug, cement, cement retainer); method to set plugs; wait-on-cement times, if any; and any deviations from the approved plugging plan (if applicable).

For conversion to a non-injection well, include the following information: Depths of activity; type of activity; changes to injection well configuration, well casing, or cement behind casing; any plug added to the well and its depth; any newly drilled interval and its depth; depths of new perforations; and method(s) to demonstrate that the well has mechanical integrity (as applicable).

For all of the above activities, include a well sketch depicting the work, results of well tests/logging performed, service company tickets, and any other available information demonstrating how the work was/is to be performed. Also, specify whether depths are below ground surface, relative to Kelly bushing, etc.

CERTIFICATION: This form must be signed and dated by either: a responsible corporate officer for a corporation, by a general partner for a partnership, by the proprietor of a sole proprietorship, or by a principal executive or ranking elected official for a public agency.

PAPERWORK REDUCTION ACT NOTICE: The public reporting and recordkeeping burden for this collection of information is estimated to average between 6.0 and 7.9 hours per response, depending on the injection well class. Burden means the total time, effort, or financial resource expended by persons to generate, maintain, retain, or disclose or provide information to or for a Federal Agency. This includes the time needed to review instructions; develop, acquire, install, and utilize technology and systems for the purposes of collecting, validating, and verifying information, processing and maintaining information, and disclosing and providing information; adjust the existing ways to comply with any previously applicable instructions and requirements; train personnel to be able to respond to the collection of information; search data sources; complete and review the collection of information; and, transmit or otherwise disclose the information. An agency may not conduct or sponsor, and a person is not required to respond to, a collection of information unless it displays a currently valid OMB control number. Send comments on the Agency's need for this information, the accuracy of the provided burden estimates, and any suggested methods for minimizing respondent burden, including the use of automated collection techniques to Director, Collection Strategies Division, U.S. Environmental Protection Agency (2822), 1200 Pennsylvania Ave., NW., Washington, D.C. 20460. Include the OMB control number in any correspondence. Do not send the completed forms to this address.

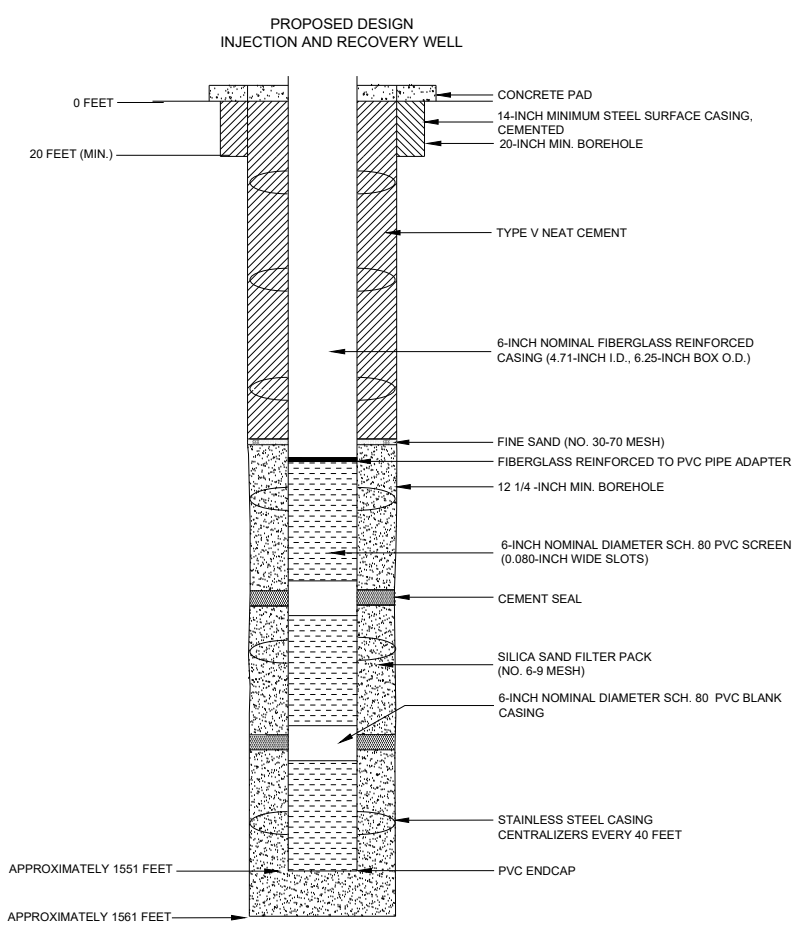

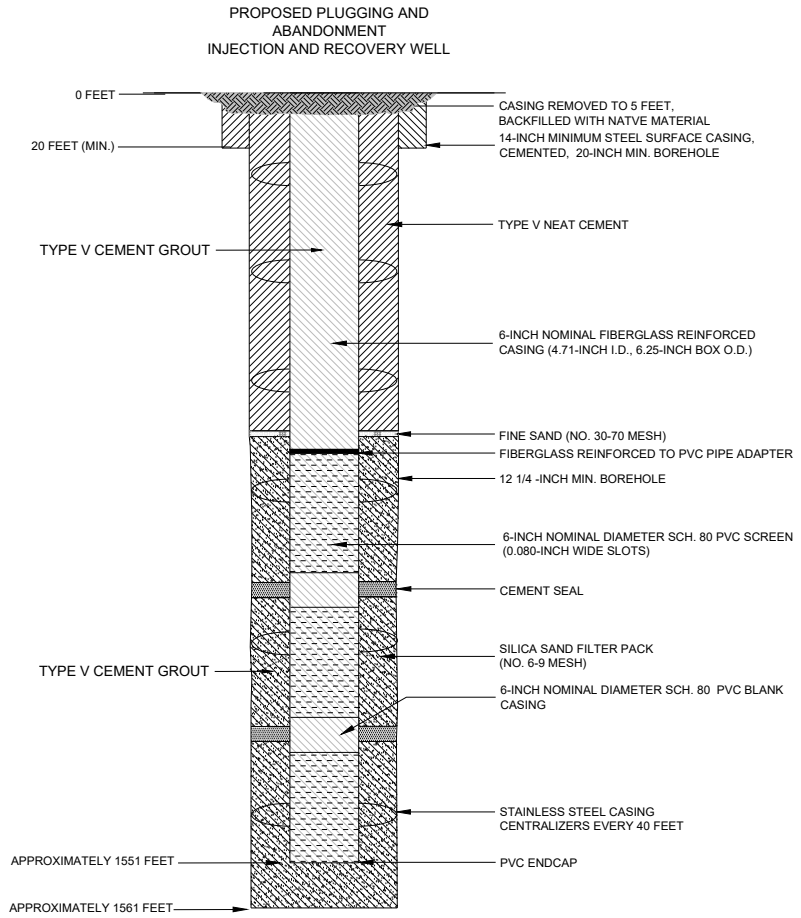

NOTES

1. WELL DESIGN DETAILS ARE BASED ON CORE HOLE AND WELL LOG RECORDS.

HALEY ALDRICH

FLORENCE COPPER, INC.
FLORENCE, ARIZONA

ABANDONMENT SCHEMATIC
RESOURCE BLOCK 78
TYPICAL INJECTION AND RECOVERY WELL

SCALE: AS SHOWN
JULY 2019

FIGURE E-39a

Saved by: MNICHOLLS Printed: 7/25/2019 7:20 PM Sheet: HA-FIG-A-L(2)
\\HALEYALDRICH.COM\SHARE\PHX_COMMON\PROJECTS\FLORENCE COPPER\132473 FLORENCE GROUNDWATER PERMITTING\CAD\132473_000-OBSERVATION_WELL_CONSTRUCTION DIAGRAM.DWG

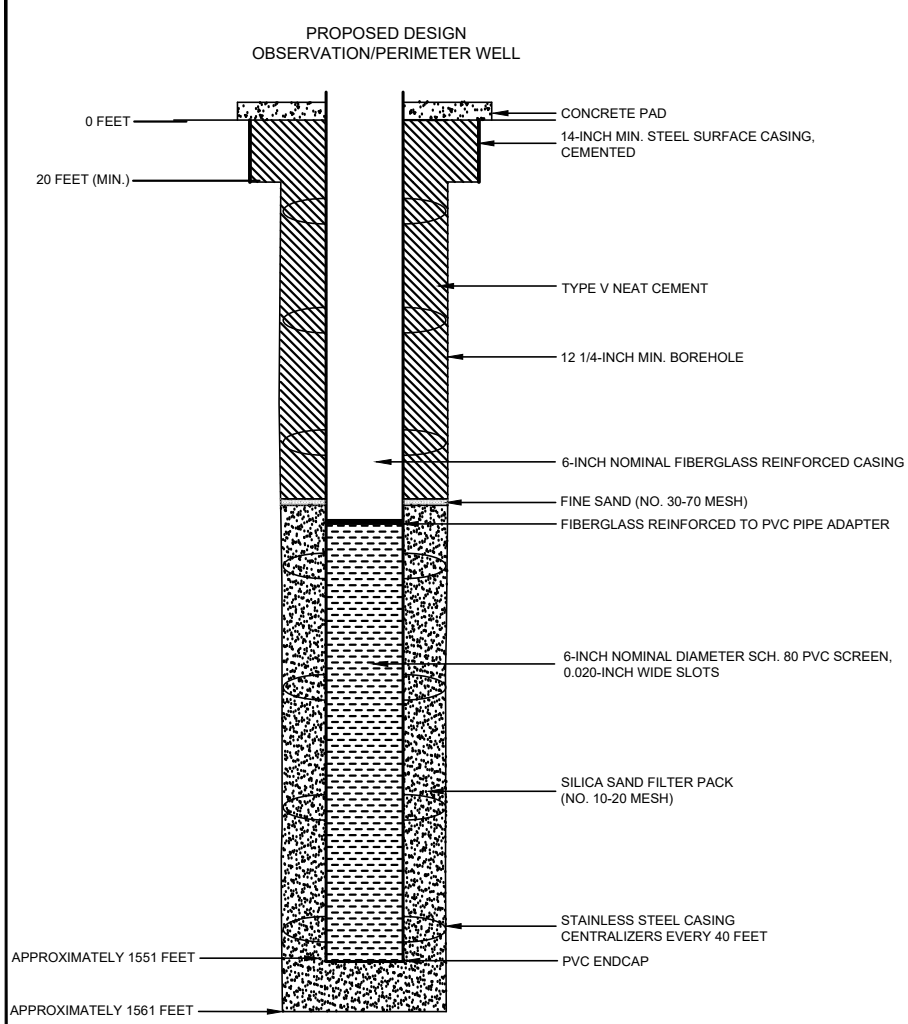

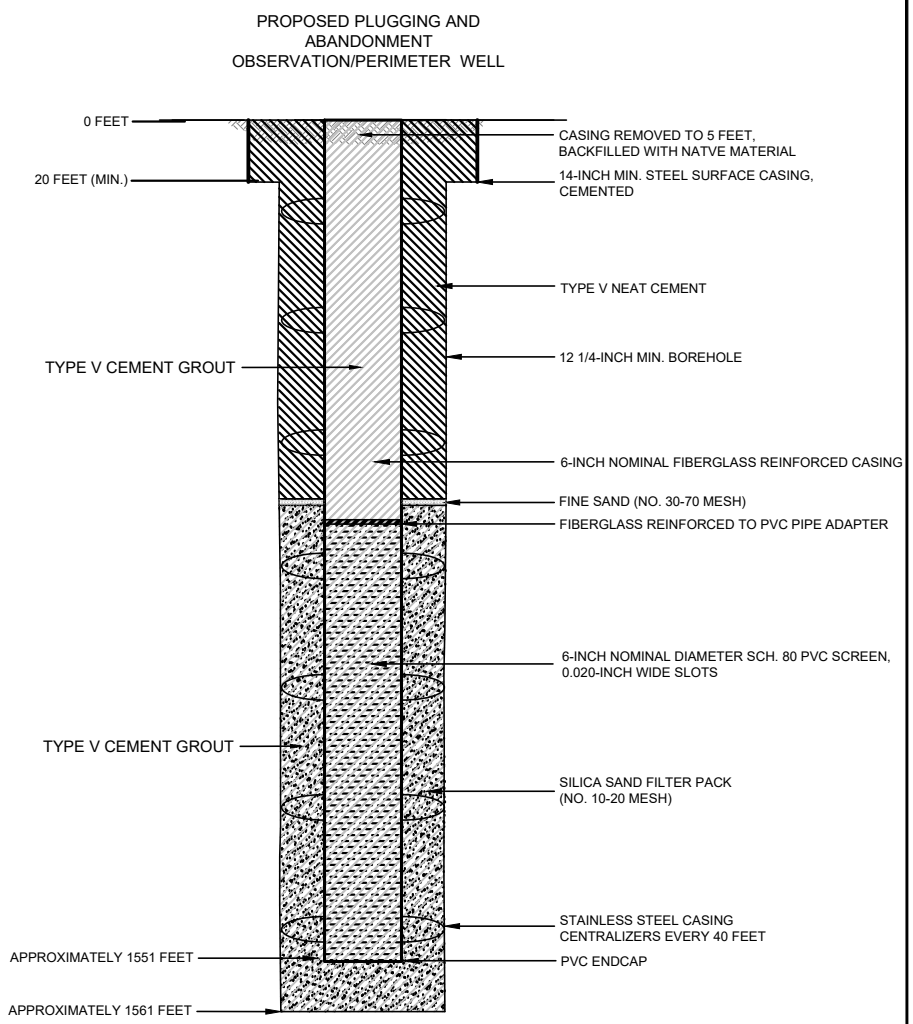

NOTES

1. WELL DESIGN DETAILS ARE BASED ON CORE HOLE AND WELL LOG RECORDS.

HALEY ALDRICH

FLORENCE COPPER, INC.
FLORENCE, ARIZONA

ABANDONMENT SCHEMATIC
RESOURCE BLOCK 78
OBSERVATION/PERIMETER WELL

JULY 2019
SCALE: AS SHOWN

FIGURE E-39b

TABLE E-39
WELLS WITHIN RESOURCE BLOCK 78
FLORENCE COPPER PROJECT
FLORENCE, ARIZONA

Well Number	Easting	Northing	Resource Block	Depth to Top of Bedrock (ft bgs)	Depth to Top of Injection Zone (ft bgs)	Depth to Bottom of Injection Zone (ft bgs)
1884	847341	744858	78	1260	1300	1551
1887	847270	744858	78	1260	1300	1551
1893	847270	744788	78	1260	1300	1551
2310	847269	744928	78	1260	1300	1551
O35	847129	744788	78	1260	1300	1551
O36	847128	745069	78	1260	1300	1551
P68	847200	744717	78	1260	1300	1551
P69	847200	744858	78	1260	1300	1551
P70	847199	744998	78	1260	1300	1551

Notes:

ft bgs = feet below ground surface

OMB No. 2040-0042 Approval Expires 4/30/2022

United States Environmental Protection Agency

WELL REWORK RECORD, PLUGGING AND ABANDONMENT PLAN, OR PLUGGING AND ABANDONMENT AFFIDAVIT

Name and Address, Phone Number and/or Email of Permittee

Florence Copper Project
1575 W Hunt Hwy,
Florence, AZ 85132

Permit or EPA ID Number	API Number	Full Well Name
R9UIC-AZ3-FY11-1		Block 79 Wells - See Attached Table E-40

State	County
Arizona	Pinal

Locate well in two directions from nearest lines of quarter section and drilling unit

Surface Location

SE 1/4 of SW 1/4 of Section 28 Township 4S Range 9E

____ ft. from (N/S) ____ Line of quarter section

____ ft. from (E/W) ____ Line of quarter section.

Latitude 33.046624

Longitude -111.434579

See Attached Table for Individual Well Coordinates.

Well Class	Timing of Action (pick one)	Type of Action (pick one)
☐ Class I ☐ Class II ☑ Class III ☐ Class V	☑ Notice Prior to Work Date Expected to Commence January 2027 ☐ Report After Work Date Work Ended	☐ Well Rework ☑ Plugging and Abandonment ☐ Conversion to a Non-Injection Well

Provide a narrative description of the work planned to be performed, or that was performed. Use additional pages as necessary. See instructions.

This plugging and abandonment applies to wells Class III wells to be constructed in block 79. There are 50 Class III multi-use injection/ recovery wells, planned for construction in this block. The injection and recovery wells will be of uniform design, and will be used for injection and recovery on an alternate basis. Some of the injection and recovery wells will be used as perimeter and observation wells prior to well field build-out.

The work performed includes plugging and abandonment of the Class III wells in resource block 79. Plugging and abandonment will be accomplished following procedures defined in Attachment E of the application. Plugging and abandonment details are shown on the attached Figure E-40.

Certification

I certify under the penalty of law that I have personally examined and am familiar with the information submitted in this document and all attachments and that, based on my inquiry of those individuals immediately responsible for obtaining the information, I believe that the information is true, accurate, and complete. I am aware that there are significant penalties for submitting false information, including the possibliity of fine and imprisonment. (Ref. 40 CFR § 144.32)

Name and Official Title *(Please type or print)*	Signature	Date Signed
Dan Johnson, VP - General Manager		10/3/2019

INSTRUCTIONS FOR FORM 7520-19

This form replaces forms 7520-12 and 7520-14. Use this form only when work is planned or has occurred that affects the well's construction or operation as an injection well, including work on the casing, tubing or packer (or for shallow Class V wells, the subsurface fluid emplacement network). Use one form per injection well. While reports or other information developed by contractors or service companies may be attached, this form must be signed by a responsible entity as described at 40 CFR 144.32. Note: operators closing Class V wells should use Form 7520-17.

NAME, ADDRESS, PHONE AND/OR EMAIL OF PERMITTEE: Enter the name and street address, city/town, state, and ZIP code of the permittee. Also provide an email address (if available) and/or a phone number.

PERMIT OR EPA ID NUMBER: Enter the well identification number or permit number assigned to the well by the EPA or the permitting authority.

API NUMBER: Enter the number assigned by the local jurisdiction (usually a State Oil and Gas Agency) using the American Petroleum Institute standard numbering system.

FULL WELL NAME: Enter the full name of the well or project.

Enter the **STATE** and **COUNTY** where the well is located. For States that do not have counties, use the name of that State's equivalent jurisdiction at a more local level.

WELL LOCATION: Fill in the complete township, range, and section to the nearest quarter-quarter section. A township is north or south of the baseline, and a range is east or west of the principal meridian (e.g., T12N, R34W). Also include the distance, in feet, from the nearest north or south line and nearest east or west line of the quarter-section. Also, enter the **latitude** and **longitude** of the well in decimal degrees, to five or six places if possible; be sure to include a negative sign for the longitude of a well in the Western Hemisphere and a negative sign for the latitude of a well in the Southern Hemisphere.

Enter the **WELL CLASS,** i.e., the class of injection well as defined in 40 CFR 144.6.

TIMING OF THE ACTION: Check ***Notice prior to work*** if the activity has not yet occurred (i.e., is planned). Check ***Report after work*** if the activity described has already occurred. As appropriate, include the date the activity is expected to start or the date the activity was completed. (Note this may not be available, e.g., for a plugging plan submitted with a permit application.)

TYPE OF ACTION: Check the appropriate box to describe the kind of activity being reported. Check ***Well Rework*** for work that was/will be performed on the well after it has already been in operation as an injection well. Check ***Plugging and Abandonment*** to report on plans for or descriptions of final closure/plugging after use as an injection well. Check ***Conversion to a Non-Injection Well*** if the well is to be converted to something other than an injection well.

Provide a **NARRATIVE DESCRIPTION** of the work planned to be performed, or that was performed. The narrative should include a description of the main procedures planned or that occurred during the work activity. A service company report, daily report, or similar document may be attached if it includes all the requested information and is clear and legible.

For well reworks, include the following information: The reason for the well rework; depths of activity; type of activity; changes to injection well configuration, well casing, or cement behind casing; any plug added to the well and its depth; any newly drilled interval and its depth; method(s) to demonstrate that the well has mechanical integrity (as applicable); and any deviations from the approved rework plan (as applicable).

For a well plugging plan, include the following information: Reason for the well plugging; number of plugs placed, and their depths; materials used as plugs (e.g., cast iron bridge plug, cement, cement retainer); method to set plugs; and wait-on-cement times, if any. Also provide one or more cost estimates from an independent firm in the business of plugging and abandoning wells to plug the well as described in the plan.

For well plugging affidavit, include the following information: Reason for the well plugging; number of plugs placed, and their depths; materials used as plugs (e.g., cast iron bridge plug, cement, cement retainer); method to set plugs; wait-on-cement times, if any; and any deviations from the approved plugging plan (if applicable).

For conversion to a non-injection well, include the following information: Depths of activity; type of activity; changes to injection well configuration, well casing, or cement behind casing; any plug added to the well and its depth; any newly drilled interval and its depth; depths of new perforations; and method(s) to demonstrate that the well has mechanical integrity (as applicable).

For all of the above activities, include a well sketch depicting the work, results of well tests/logging performed, service company tickets, and any other available information demonstrating how the work was/is to be performed. Also, specify whether depths are below ground surface, relative to Kelly bushing, etc.

CERTIFICATION: This form must be signed and dated by either: a responsible corporate officer for a corporation, by a general partner for a partnership, by the proprietor of a sole proprietorship, or by a principal executive or ranking elected official for a public agency.

PAPERWORK REDUCTION ACT NOTICE: The public reporting and recordkeeping burden for this collection of information is estimated to average between 6.0 and 7.9 hours per response, depending on the injection well class. Burden means the total time, effort, or financial resource expended by persons to generate, maintain, retain, or disclose or provide information to or for a Federal Agency. This includes the time needed to review instructions; develop, acquire, install, and utilize technology and systems for the purposes of collecting, validating, and verifying information, processing and maintaining information, and disclosing and providing information; adjust the existing ways to comply with any previously applicable instructions and requirements; train personnel to be able to respond to the collection of information; search data sources; complete and review the collection of information; and, transmit or otherwise disclose the information. An agency may not conduct or sponsor, and a person is not required to respond to, a collection of information unless it displays a currently valid OMB control number. Send comments on the Agency's need for this information, the accuracy of the provided burden estimates, and any suggested methods for minimizing respondent burden, including the use of automated collection techniques to Director, Collection Strategies Division, U.S. Environmental Protection Agency (2822), 1200 Pennsylvania Ave., NW., Washington, D.C. 20460. Include the OMB control number in any correspondence. Do not send the completed forms to this address.

PROPOSED DESIGN
INJECTION AND RECOVERY WELL

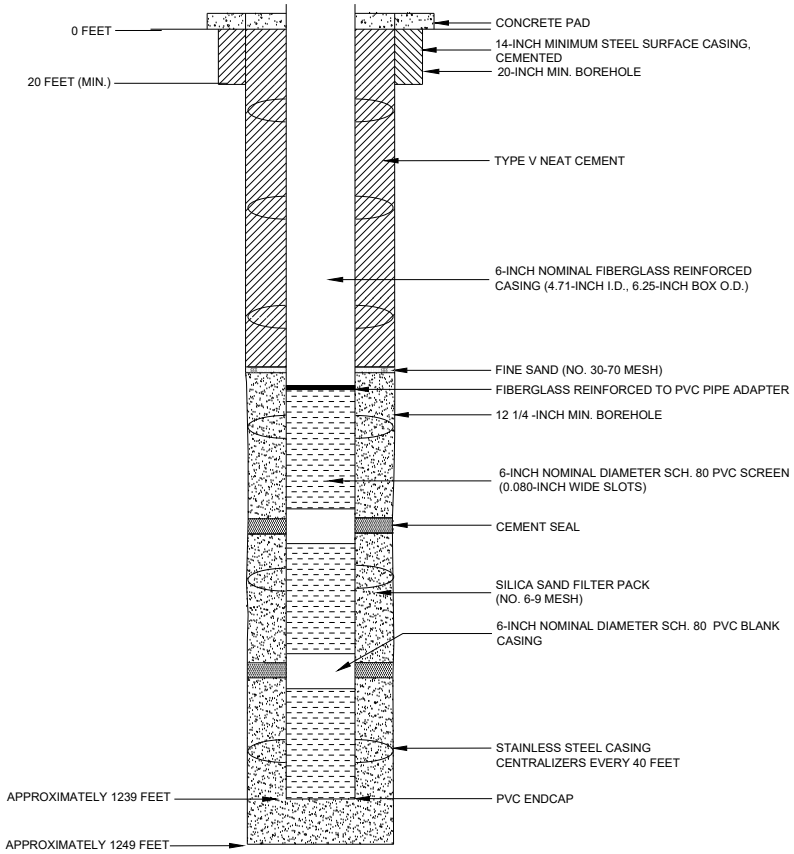

PROPOSED PLUGGING AND
ABANDONMENT
INJECTION AND RECOVERY WELL

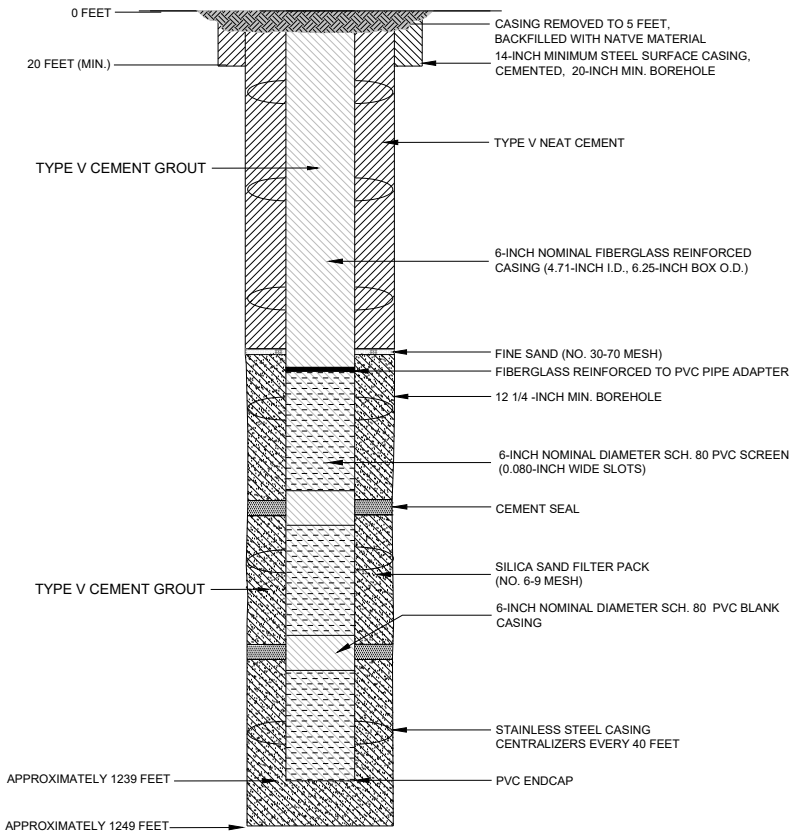

NOTES

1. WELL DESIGN DETAILS ARE BASED ON CORE HOLE AND WELL LOG RECORDS.

HALEY ALDRICH

FLORENCE COPPER, INC.
FLORENCE, ARIZONA

ABANDONMENT SCHEMATIC
RESOURCE BLOCK 79
TYPICAL INJECTION AND
RECOVERY WELL

SCALE: AS SHOWN
JULY 2019

FIGURE E-40

TABLE E-40
WELLS WITHIN RESOURCE BLOCK 79
FLORENCE COPPER PROJECT
FLORENCE, ARIZONA

Well Number	Easting	Northing	Resource Block	Depth to Top of Bedrock (ft bgs)	Depth to Top of Injection Zone (ft bgs)	Depth to Bottom of Injection Zone (ft bgs)
1767	847977	744859	79	560	600	1239
1768	848048	744859	79	560	600	1239
1772	847765	744576	79	560	600	1239
1773	847836	744647	79	560	600	1239
1774	847836	744717	79	560	600	1239
1775	847765	744647	79	560	600	1239
1776	847694	744576	79	560	600	1239
1777	847977	744788	79	560	600	1239
1778	847906	744788	79	560	600	1239
1779	847906	744717	79	560	600	1239
1900	847412	744858	79	560	600	1239
1901	847482	744929	79	560	600	1239
1902	847553	744859	79	560	600	1239
1903	847482	744859	79	560	600	1239
1912	847553	744788	79	560	600	1239
1913	847482	744788	79	560	600	1239
1915	847553	744717	79	560	600	1239
1919	847624	744646	79	560	600	1239
1920	847624	744788	79	560	600	1239
1921	847624	744717	79	560	600	1239
1922	847694	744646	79	560	600	1239
1923	847694	744717	79	560	600	1239
2055	847553	745000	79	560	600	1239
2056	847553	744929	79	560	600	1239
2057	847624	745071	79	560	600	1239
2058	847624	744859	79	560	600	1239
2059	847624	744929	79	560	600	1239
2060	847624	745000	79	560	600	1239
2061	847836	744859	79	560	600	1239
2062	847907	744929	79	560	600	1239
2065	847907	745000	79	560	600	1239
2066	847836	744929	79	560	600	1239
2067	847765	744859	79	560	600	1239
2068	847695	744929	79	560	600	1239
2069	847765	745000	79	560	600	1239
2070	847836	745071	79	560	600	1239
2074	847836	745000	79	560	600	1239
2075	847765	744929	79	560	600	1239
2076	847694	744859	79	560	600	1239

TABLE E-40
WELLS WITHIN RESOURCE BLOCK 79
FLORENCE COPPER PROJECT
FLORENCE, ARIZONA

Well Number	Easting	Northing	Resource Block	Depth to Top of Bedrock (ft bgs)	Depth to Top of Injection Zone (ft bgs)	Depth to Bottom of Injection Zone (ft bgs)
2077	847695	745071	79	560	600	1239
2078	847765	745141	79	560	600	1239
2082	847765	745071	79	560	600	1239
2083	847695	745000	79	560	600	1239
2086	847695	745141	79	560	600	1239
2087	847907	744859	79	560	600	1239
2088	847977	744929	79	560	600	1239
2091	847765	744717	79	560	600	1239
2092	847765	744788	79	560	600	1239
2093	847694	744788	79	560	600	1239
2094	847836	744788	79	560	600	1239

Notes:

ft bgs = feet below ground surface

OMB No. 2040-0042 Approval Expires 4/30/2022

United States Environmental Protection Agency

WELL REWORK RECORD, PLUGGING AND ABANDONMENT PLAN, OR PLUGGING AND ABANDONMENT AFFIDAVIT

Name and Address, Phone Number and/or Email of Permittee

Florence Copper Project
1575 W Hunt Hwy,
Florence, AZ 85132

Permit or EPA ID Number	API Number	Full Well Name
R9UIC-AZ3-FY11-1		Block 80 Wells - See Attached Table E-41

State	County
Arizona	Pinal

Locate well in two directions from nearest lines of quarter section and drilling unit

Surface Location

SE 1/4 of SW 1/4 of Section 28 Township 4S Range 9E

_____ ft. from (N/S) _____ Line of quarter section

_____ ft. from (E/W) _____ Line of quarter section.

Latitude 33.046674

Longitude -111.432298

See Attached Table for Individual Well Coordinates.

Well Class	Timing of Action (pick one)	Type of Action (pick one)
☐ Class I ☐ Class II ☑ Class III ☐ Class V	☑ Notice Prior to Work Date Expected to Commence January 2027 ☐ Report After Work Date Work Ended	☐ Well Rework ☑ Plugging and Abandonment ☐ Conversion to a Non-Injection Well

Provide a narrative description of the work planned to be performed, or that was performed. Use additional pages as necessary. See instructions.

This plugging and abandonment applies to wells Class III wells to be constructed in block 80. There are 50 Class III multi-use injection/ recovery wells, planned for construction in this block. The injection and recovery wells will be of uniform design, and will be used for injection and recovery on an alternate basis. Some of the injection and recovery wells will be used as perimeter and observation wells prior to well field build-out.

The work performed includes plugging and abandonment of the Class III wells in resource block 80. Plugging and abandonment will be accomplished following procedures defined in Attachment E of the application. Plugging and abandonment details are shown on the attached Figure E-41.

Certification

I certify under the penalty of law that I have personally examined and am familiar with the information submitted in this document and all attachments and that, based on my inquiry of those individuals immediately responsible for obtaining the information, I believe that the information is true, accurate, and complete. I am aware that there are significant penalties for submitting false information, including the possibliity of fine and imprisonment. (Ref. 40 CFR § 144.32)

Name and Official Title *(Please type or print)*	Signature	Date Signed
Dan Johnson, VP - General Manager		10/3/2019

INSTRUCTIONS FOR FORM 7520-19

This form replaces forms 7520-12 and 7520-14. Use this form only when work is planned or has occurred that affects the well's construction or operation as an injection well, including work on the casing, tubing or packer (or for shallow Class V wells, the subsurface fluid emplacement network). Use one form per injection well. While reports or other information developed by contractors or service companies may be attached, this form must be signed by a responsible entity as described at 40 CFR 144.32. Note: operators closing Class V wells should use Form 7520-17.

NAME, ADDRESS, PHONE AND/OR EMAIL OF PERMITTEE: Enter the name and street address, city/town, state, and ZIP code of the permittee. Also provide an email address (if available) and/or a phone number.

PERMIT OR EPA ID NUMBER: Enter the well identification number or permit number assigned to the well by the EPA or the permitting authority.

API NUMBER: Enter the number assigned by the local jurisdiction (usually a State Oil and Gas Agency) using the American Petroleum Institute standard numbering system.

FULL WELL NAME: Enter the full name of the well or project.

Enter the **STATE** and **COUNTY** where the well is located. For States that do not have counties, use the name of that State's equivalent jurisdiction at a more local level.

WELL LOCATION: Fill in the complete township, range, and section to the nearest quarter-quarter section. A township is north or south of the baseline, and a range is east or west of the principal meridian (e.g., T12N, R34W). Also include the distance, in feet, from the nearest north or south line and nearest east or west line of the quarter-section. Also, enter the **latitude** and **longitude** of the well in decimal degrees, to five or six places if possible; be sure to include a negative sign for the longitude of a well in the Western Hemisphere and a negative sign for the latitude of a well in the Southern Hemisphere.

Enter the **WELL CLASS,** i.e., the class of injection well as defined in 40 CFR 144.6.

TIMING OF THE ACTION: Check ***Notice prior to work*** if the activity has not yet occurred (i.e., is planned). Check ***Report after work*** if the activity described has already occurred. As appropriate, include the date the activity is expected to start or the date the activity was completed. (Note this may not be available, e.g., for a plugging plan submitted with a permit application.)

TYPE OF ACTION: Check the appropriate box to describe the kind of activity being reported. Check ***Well Rework*** for work that was/will be performed on the well after it has already been in operation as an injection well. Check ***Plugging and Abandonment*** to report on plans for or descriptions of final closure/plugging after use as an injection well. Check ***Conversion to a Non-Injection Well*** if the well is to be converted to something other than an injection well.

Provide a **NARRATIVE DESCRIPTION** of the work planned to be performed, or that was performed. The narrative should include a description of the main procedures planned or that occurred during the work activity. A service company report, daily report, or similar document may be attached if it includes all the requested information and is clear and legible.

For well reworks, include the following information: The reason for the well rework; depths of activity; type of activity; changes to injection well configuration, well casing, or cement behind casing; any plug added to the well and its depth; any newly drilled interval and its depth; method(s) to demonstrate that the well has mechanical integrity (as applicable); and any deviations from the approved rework plan (as applicable).

For a well plugging plan, include the following information: Reason for the well plugging; number of plugs placed, and their depths; materials used as plugs (e.g., cast iron bridge plug, cement, cement retainer); method to set plugs; and wait-on-cement times, if any. Also provide one or more cost estimates from an independent firm in the business of plugging and abandoning wells to plug the well as described in the plan.

For well plugging affidavit, include the following information: Reason for the well plugging; number of plugs placed, and their depths; materials used as plugs (e.g., cast iron bridge plug, cement, cement retainer); method to set plugs; wait-on-cement times, if any; and any deviations from the approved plugging plan (if applicable).

For conversion to a non-injection well, include the following information: Depths of activity; type of activity; changes to injection well configuration, well casing, or cement behind casing; any plug added to the well and its depth; any newly drilled interval and its depth; depths of new perforations; and method(s) to demonstrate that the well has mechanical integrity (as applicable).

For all of the above activities, include a well sketch depicting the work, results of well tests/logging performed, service company tickets, and any other available information demonstrating how the work was/is to be performed. Also, specify whether depths are below ground surface, relative to Kelly bushing, etc.

CERTIFICATION: This form must be signed and dated by either: a responsible corporate officer for a corporation, by a general partner for a partnership, by the proprietor of a sole proprietorship, or by a principal executive or ranking elected official for a public agency.

PAPERWORK REDUCTION ACT NOTICE: The public reporting and recordkeeping burden for this collection of information is estimated to average between 6.0 and 7.9 hours per response, depending on the injection well class. Burden means the total time, effort, or financial resource expended by persons to generate, maintain, retain, or disclose or provide information to or for a Federal Agency. This includes the time needed to review instructions; develop, acquire, install, and utilize technology and systems for the purposes of collecting, validating, and verifying information, processing and maintaining information, and disclosing and providing information; adjust the existing ways to comply with any previously applicable instructions and requirements; train personnel to be able to respond to the collection of information; search data sources; complete and review the collection of information; and, transmit or otherwise disclose the information. An agency may not conduct or sponsor, and a person is not required to respond to, a collection of information unless it displays a currently valid OMB control number. Send comments on the Agency's need for this information, the accuracy of the provided burden estimates, and any suggested methods for minimizing respondent burden, including the use of automated collection techniques to Director, Collection Strategies Division, U.S. Environmental Protection Agency (2822), 1200 Pennsylvania Ave., NW., Washington, D.C. 20460. Include the OMB control number in any correspondence. Do not send the completed forms to this address.

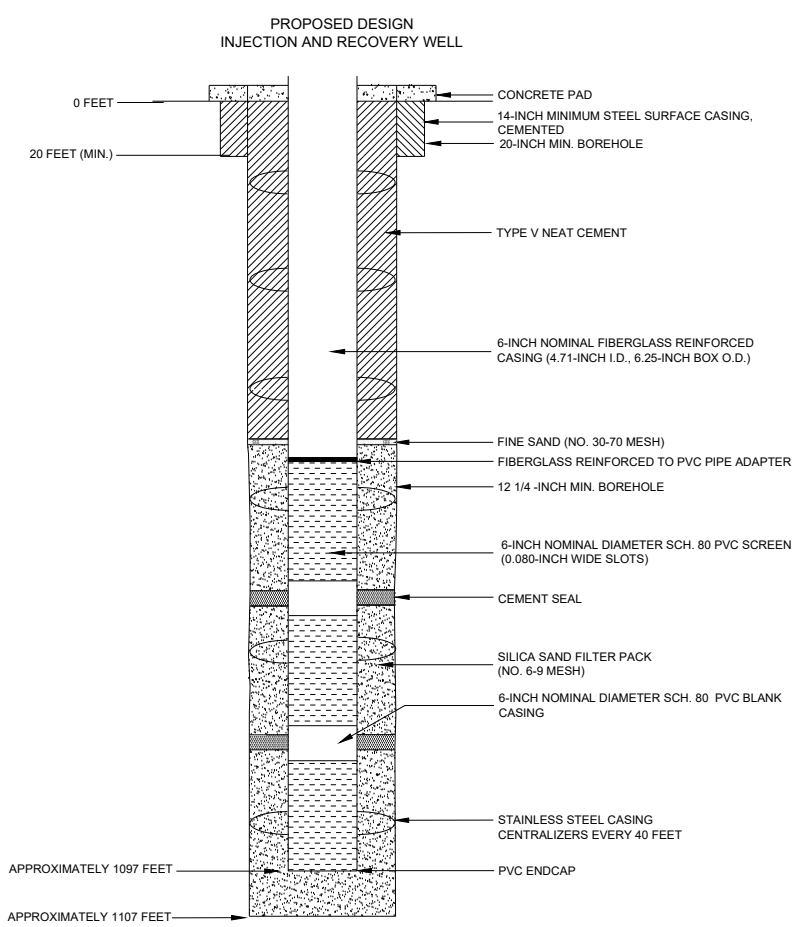

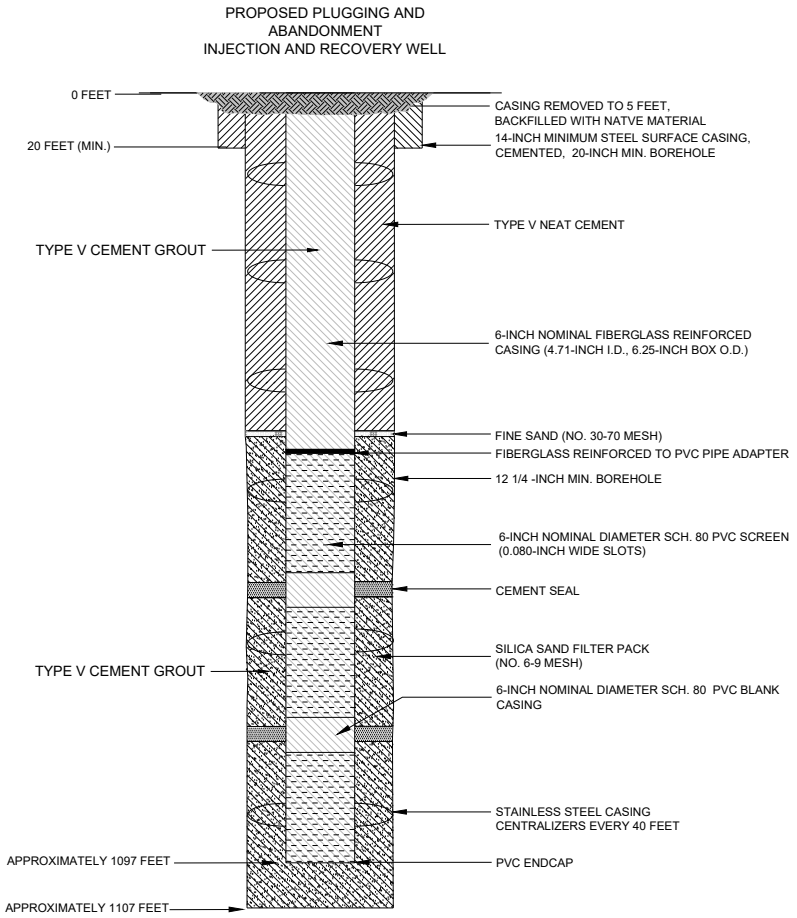

NOTES

1. WELL DESIGN DETAILS ARE BASED ON CORE HOLE AND WELL LOG RECORDS.

HALEY ALDRICH

FLORENCE COPPER, INC.
FLORENCE, ARIZONA

ABANDONMENT SCHEMATIC
RESOURCE BLOCK 80
TYPICAL INJECTION AND RECOVERY WELL

SCALE: AS SHOWN
JULY 2019

FIGURE E-41

TABLE E-41
WELLS WITHIN RESOURCE BLOCK 80
FLORENCE COPPER PROJECT
FLORENCE, ARIZONA

Well Number	Easting	Northing	Resource Block	Depth to Top of Bedrock (ft bgs)	Depth to Top of Injection Zone (ft bgs)	Depth to Bottom of Injection Zone (ft bgs)
1254	848684	744859	80	380	420	1097
1255	848755	744859	80	632	672	1097
1260	848472	744576	80	632	672	1097
1261	848543	744646	80	632	672	1097
1262	848543	744717	80	632	672	1097
1263	848472	744646	80	632	672	1097
1264	848402	744576	80	632	672	1097
1270	848684	744788	80	632	672	1097
1271	848614	744788	80	632	672	1097
1272	848614	744717	80	632	672	1097
1684	848543	744859	80	632	672	1097
1685	848614	744929	80	632	672	1097
1688	848614	745000	80	632	672	1097
1689	848543	744929	80	632	672	1097
1690	848472	744859	80	632	672	1097
1691	848331	744859	80	632	672	1097
1692	848402	744929	80	632	672	1097
1693	848472	745000	80	632	672	1097
1694	848543	745071	80	632	672	1097
1698	848543	745000	80	632	672	1097
1699	848472	744929	80	632	672	1097
1700	848402	744859	80	632	672	1097
1701	848260	744929	80	632	672	1097
1702	848331	745000	80	632	672	1097
1703	848402	745071	80	632	672	1097
1704	848472	745141	80	632	672	1097
1708	848472	745071	80	632	672	1097
1709	848402	745000	80	632	672	1097
1710	848331	744929	80	632	672	1097
1711	848260	744859	80	632	672	1097
1714	848402	745141	80	632	672	1097
1715	848331	745071	80	632	672	1097
1716	848260	745000	80	632	672	1097
1717	848189	744929	80	632	672	1097
1723	848614	744859	80	632	672	1097
1724	848684	744929	80	632	672	1097
1731	848472	744717	80	632	672	1097
1732	848472	744788	80	632	672	1097
1733	848402	744717	80	632	672	1097

TABLE E-41
WELLS WITHIN RESOURCE BLOCK 80
FLORENCE COPPER PROJECT
FLORENCE, ARIZONA

Well Number	Easting	Northing	Resource Block	Depth to Top of Bedrock (ft bgs)	Depth to Top of Injection Zone (ft bgs)	Depth to Bottom of Injection Zone (ft bgs)
1734	848402	744788	80	632	672	1097
1735	848331	744788	80	632	672	1097
1736	848543	744788	80	632	672	1097
1787	848189	744859	80	632	672	1097
1788	848119	744859	80	632	672	1097
1804	848401	744647	80	632	672	1097
1805	848331	744647	80	632	672	1097
1812	848331	744717	80	632	672	1097
1813	848260	744717	80	632	672	1097
1824	848260	744788	80	632	672	1097
1825	848189	744788	80	632	672	1097

Notes:

ft bgs = feet below ground surface

OMB No. 2040-0042 Approval Expires 4/30/2022

United States Environmental Protection Agency

WELL REWORK RECORD, PLUGGING AND ABANDONMENT PLAN, OR PLUGGING AND ABANDONMENT AFFIDAVIT

Name and Address, Phone Number and/or Email of Permittee

Florence Copper Project
1575 W Hunt Hwy,
Florence, AZ 85132

Permit or EPA ID Number	API Number	Full Well Name
R9UIC-AZ3-FY11-1		Block 81 Wells - See Attached Table E-42

State	County
Arizona	Pinal

Locate well in two directions from nearest lines of quarter section and drilling unit

Surface Location

SW **1/4 of** SE **1/4 of Section** 28 **Township** 4S **Range** 9E

_____ **ft. from (N/S)** _____ **Line of quarter section**

_____ **ft. from (E/W)** _____ **Line of quarter section.**

Latitude 33.046665

Longitude -111.429989

See Attached Table for Individual Well Coordinates.

Well Class	Timing of Action (pick one)	Type of Action (pick one)
☐ Class I ☐ Class II ☑ Class III ☐ Class V	☑ Notice Prior to Work Date Expected to Commence January 2027 ☐ Report After Work Date Work Ended	☐ Well Rework ☑ Plugging and Abandonment ☐ Conversion to a Non-Injection Well

Provide a narrative description of the work planned to be performed, or that was performed. Use additional pages as necessary. See instructions.

This plugging and abandonment applies to wells Class III wells to be constructed in block 81. There are 51 Class III multi-use injection/ recovery wells, planned for construction in this block. The injection and recovery wells will be of uniform design, and will be used for injection and recovery on an alternate basis. Some of the injection and recovery wells will be used as perimeter and observation wells prior to well field build-out.

The work performed includes plugging and abandonment of the Class III wells in resource block 81. Plugging and abandonment will be accomplished following procedures defined in Attachment E of the application. Plugging and abandonment details are shown on the attached Figure E-42.

Certification

I certify under the penalty of law that I have personally examined and am familiar with the information submitted in this document and all attachments and that, based on my inquiry of those individuals immediately responsible for obtaining the information, I believe that the information is true, accurate, and complete. I am aware that there are significant penalties for submitting false information, including the possibliity of fine and imprisonment. (Ref. 40 CFR § 144.32)

Name and Official Title *(Please type or print)*	Signature	Date Signed
Dan Johnson, VP - General Manager		10/3/2019

INSTRUCTIONS FOR FORM 7520-19

This form replaces forms 7520-12 and 7520-14. Use this form only when work is planned or has occurred that affects the well's construction or operation as an injection well, including work on the casing, tubing or packer (or for shallow Class V wells, the subsurface fluid emplacement network). Use one form per injection well. While reports or other information developed by contractors or service companies may be attached, this form must be signed by a responsible entity as described at 40 CFR 144.32. Note: operators closing Class V wells should use Form 7520-17.

NAME, ADDRESS, PHONE AND/OR EMAIL OF PERMITTEE: Enter the name and street address, city/town, state, and ZIP code of the permittee. Also provide an email address (if available) and/or a phone number.

PERMIT OR EPA ID NUMBER: Enter the well identification number or permit number assigned to the well by the EPA or the permitting authority.

API NUMBER: Enter the number assigned by the local jurisdiction (usually a State Oil and Gas Agency) using the American Petroleum Institute standard numbering system.

FULL WELL NAME: Enter the full name of the well or project.

Enter the **STATE** and **COUNTY** where the well is located. For States that do not have counties, use the name of that State's equivalent jurisdiction at a more local level.

WELL LOCATION: Fill in the complete township, range, and section to the nearest quarter-quarter section. A township is north or south of the baseline, and a range is east or west of the principal meridian (e.g., T12N, R34W). Also include the distance, in feet, from the nearest north or south line and nearest east or west line of the quarter-section. Also, enter the **latitude** and **longitude** of the well in decimal degrees, to five or six places if possible; be sure to include a negative sign for the longitude of a well in the Western Hemisphere and a negative sign for the latitude of a well in the Southern Hemisphere.

Enter the **WELL CLASS,** i.e., the class of injection well as defined in 40 CFR 144.6.

TIMING OF THE ACTION: Check ***Notice prior to work*** if the activity has not yet occurred (i.e., is planned). Check ***Report after work*** if the activity described has already occurred. As appropriate, include the date the activity is expected to start or the date the activity was completed. (Note this may not be available, e.g., for a plugging plan submitted with a permit application.)

TYPE OF ACTION: Check the appropriate box to describe the kind of activity being reported. Check ***Well Rework*** for work that was/will be performed on the well after it has already been in operation as an injection well. Check ***Plugging and Abandonment*** to report on plans for or descriptions of final closure/plugging after use as an injection well. Check ***Conversion to a Non-Injection Well*** if the well is to be converted to something other than an injection well.

Provide a **NARRATIVE DESCRIPTION** of the work planned to be performed, or that was performed. The narrative should include a description of the main procedures planned or that occurred during the work activity. A service company report, daily report, or similar document may be attached if it includes all the requested information and is clear and legible.

For well reworks, include the following information: The reason for the well rework; depths of activity; type of activity; changes to injection well configuration, well casing, or cement behind casing; any plug added to the well and its depth; any newly drilled interval and its depth; method(s) to demonstrate that the well has mechanical integrity (as applicable); and any deviations from the approved rework plan (as applicable).

For a well plugging plan, include the following information: Reason for the well plugging; number of plugs placed, and their depths; materials used as plugs (e.g., cast iron bridge plug, cement, cement retainer); method to set plugs; and wait-on-cement times, if any. Also provide one or more cost estimates from an independent firm in the business of plugging and abandoning wells to plug the well as described in the plan.

For well plugging affidavit, include the following information: Reason for the well plugging; number of plugs placed, and their depths; materials used as plugs (e.g., cast iron bridge plug, cement, cement retainer); method to set plugs; wait-on-cement times, if any; and any deviations from the approved plugging plan (if applicable).

For conversion to a non-injection well, include the following information: Depths of activity; type of activity; changes to injection well configuration, well casing, or cement behind casing; any plug added to the well and its depth; any newly drilled interval and its depth; depths of new perforations; and method(s) to demonstrate that the well has mechanical integrity (as applicable).

For all of the above activities, include a well sketch depicting the work, results of well tests/logging performed, service company tickets, and any other available information demonstrating how the work was/is to be performed. Also, specify whether depths are below ground surface, relative to Kelly bushing, etc.

CERTIFICATION: This form must be signed and dated by either: a responsible corporate officer for a corporation, by a general partner for a partnership, by the proprietor of a sole proprietorship, or by a principal executive or ranking elected official for a public agency.

PAPERWORK REDUCTION ACT NOTICE: The public reporting and recordkeeping burden for this collection of information is estimated to average between 6.0 and 7.9 hours per response, depending on the injection well class. Burden means the total time, effort, or financial resource expended by persons to generate, maintain, retain, or disclose or provide information to or for a Federal Agency. This includes the time needed to review instructions; develop, acquire, install, and utilize technology and systems for the purposes of collecting, validating, and verifying information, processing and maintaining information, and disclosing and providing information; adjust the existing ways to comply with any previously applicable instructions and requirements; train personnel to be able to respond to the collection of information; search data sources; complete and review the collection of information; and, transmit or otherwise disclose the information. An agency may not conduct or sponsor, and a person is not required to respond to, a collection of information unless it displays a currently valid OMB control number. Send comments on the Agency's need for this information, the accuracy of the provided burden estimates, and any suggested methods for minimizing respondent burden, including the use of automated collection techniques to Director, Collection Strategies Division, U.S. Environmental Protection Agency (2822), 1200 Pennsylvania Ave., NW., Washington, D.C. 20460. Include the OMB control number in any correspondence. Do not send the completed forms to this address.

PROPOSED DESIGN
INJECTION AND RECOVERY WELL

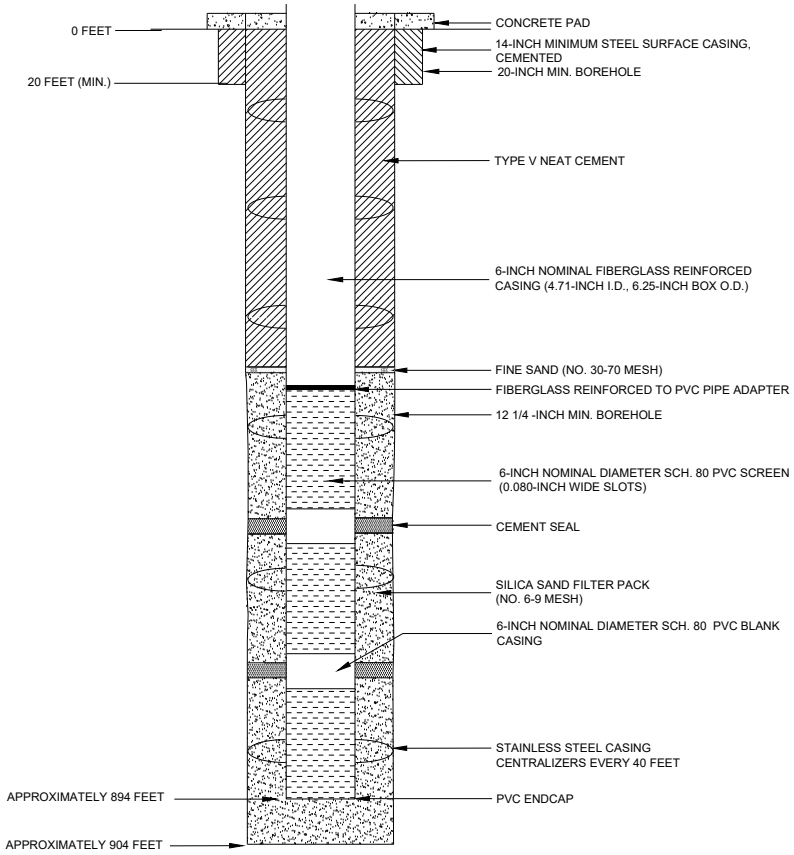

PROPOSED PLUGGING AND
ABANDONMENT
INJECTION AND RECOVERY WELL

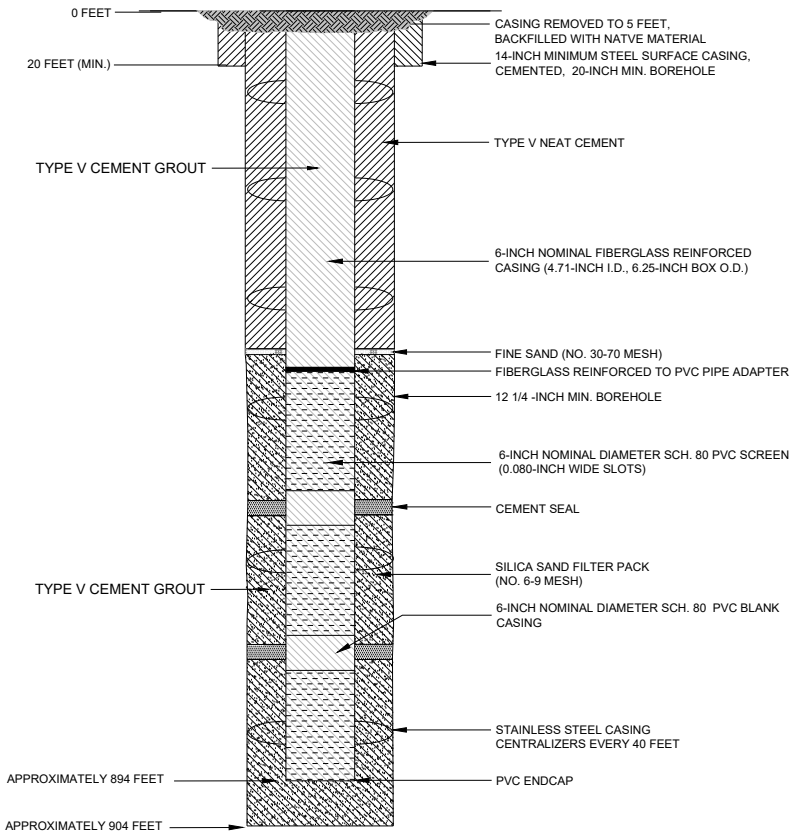

NOTES

1. WELL DESIGN DETAILS ARE BASED ON CORE HOLE AND WELL LOG RECORDS.

HALEY ALDRICH

FLORENCE COPPER, INC.
FLORENCE, ARIZONA

ABANDONMENT SCHEMATIC
RESOURCE BLOCK 81
TYPICAL INJECTION AND
RECOVERY WELL

SCALE: AS SHOWN
JULY 2019

FIGURE E-42

TABLE E-42
WELLS WITHIN RESOURCE BLOCK 81
FLORENCE COPPER PROJECT
FLORENCE, ARIZONA

Well Number	Easting	Northing	Resource Block	Depth to Top of Bedrock (ft bgs)	Depth to Top of Injection Zone (ft bgs)	Depth to Bottom of Injection Zone (ft bgs)
1099	849462	744859	81	402	442	894
1114	849391	744859	81	402	442	894
1123	849109	744576	81	402	442	894
1170	849180	744575	81	402	442	894
1171	849250	744646	81	402	442	894
1172	849179	744646	81	402	442	894
1173	849391	744788	81	402	442	894
1174	849321	744788	81	402	442	894
1175	849321	744717	81	402	442	894
1176	849250	744717	81	402	442	894
1363	848967	744859	81	402	442	894
1364	849038	744929	81	402	442	894
1365	848967	744929	81	402	442	894
1366	848897	744859	81	402	442	894
1367	848967	745000	81	402	442	894
1368	848897	744929	81	402	442	894
1369	848826	744859	81	402	442	894
1370	849109	744859	81	402	442	894
1371	849038	744859	81	402	442	894
1389	849038	744646	81	402	442	894
1395	848967	744717	81	402	442	894
1398	848896	744788	81	402	442	894
1401	849109	744788	81	402	442	894
1402	849038	744788	81	402	442	894
1403	848967	744788	81	402	442	894
1404	849109	744717	81	402	442	894
1405	849038	744717	81	402	442	894
1406	849109	744646	81	402	442	894
1416	849179	744788	81	402	442	894
1417	849179	744717	81	402	442	894
1508	849109	745000	81	402	442	894
1509	849109	745071	81	402	442	894
1510	849038	745000	81	402	442	894
1511	849109	745141	81	402	442	894
1512	849038	745071	81	402	442	894
1513	849109	744929	81	402	442	894
1514	849391	744929	81	402	442	894
1519	849321	745000	81	402	442	894
1529	849321	744929	81	402	442	894

TABLE E-42
WELLS WITHIN RESOURCE BLOCK 81
FLORENCE COPPER PROJECT
FLORENCE, ARIZONA

Well Number	Easting	Northing	Resource Block	Depth to Top of Bedrock (ft bgs)	Depth to Top of Injection Zone (ft bgs)	Depth to Bottom of Injection Zone (ft bgs)
1535	849250	745000	81	402	442	894
1536	849250	745071	81	402	442	894
1545	849179	745071	81	402	442	894
1546	849321	744859	81	402	442	894
1547	849179	744859	81	402	442	894
1548	849250	744859	81	402	442	894
1549	849250	744929	81	402	442	894
1550	849179	744929	81	402	442	894
1551	849179	745000	81	402	442	894
1552	849180	745140	81	402	442	894
1559	849250	744788	81	402	442	894
1706	848614	745212	81	402	442	894

Notes:

ft bgs = feet below ground surface

OMB No. 2040-0042 Approval Expires 4/30/2022

United States Environmental Protection Agency

WELL REWORK RECORD, PLUGGING AND ABANDONMENT PLAN, OR PLUGGING AND ABANDONMENT AFFIDAVIT

Name and Address, Phone Number and/or Email of Permittee

Florence Copper Project
1575 W Hunt Hwy,
Florence, AZ 85132

Permit or EPA ID Number	API Number	Full Well Name
R9UIC-AZ3-FY11-1		Block 82 Wells - See Attached Table E-43

State	County
Arizona	Pinal

Locate well in two directions from nearest lines of quarter section and drilling unit

Surface Location

SW 1/4 of SE 1/4 of Section 28 Township 4S Range 9E

____ ft. from (N/S) ____ Line of quarter section

____ ft. from (E/W) ____ Line of quarter section.

Latitude 33.046682

Longitude -111.427992

See Attached Table for Individual Well Coordinates.

Well Class	Timing of Action (pick one)	Type of Action (pick one)
☐ Class I ☐ Class II ☑ Class III ☐ Class V	☑ Notice Prior to Work Date Expected to Commence January 2027 ☐ Report After Work Date Work Ended	☐ Well Rework ☑ Plugging and Abandonment ☐ Conversion to a Non-Injection Well

Provide a narrative description of the work planned to be performed, or that was performed. Use additional pages as necessary. See instructions.

This plugging and abandonment applies to wells Class III wells to be constructed in block 82. There are 31 Class III multi-use injection/ recovery wells, 2 dedicated Class III observation, and 3 Class III perimeter wells planned for construction in this block. The injection and recovery wells will be of uniform design, and will be used for injection and recovery on an alternate basis. Some of the injection and recovery wells will be used as perimeter and observation wells prior to well field build-out. The dedicated perimeter observation well will have a design and depth similar to the injection and recovery wells, but will not have a segmented well screen.

The work performed includes plugging and abandonment of the Class III wells in resource block 82. Plugging and abandonment will be accomplished following procedures defined in Attachment E of the application. Plugging and abandonment details are shown on the attached Figures E-43a and E-43b.

Certification

I certify under the penalty of law that I have personally examined and am familiar with the information submitted in this document and all attachments and that, based on my inquiry of those individuals immediately responsible for obtaining the information, I believe that the information is true, accurate, and complete. I am aware that there are significant penalties for submitting false information, including the possibliity of fine and imprisonment. (Ref. 40 CFR § 144.32)

Name and Official Title *(Please type or print)*	Signature	Date Signed
Dan Johnson, VP - General Manager		10/3/2019

INSTRUCTIONS FOR FORM 7520-19

This form replaces forms 7520-12 and 7520-14. Use this form only when work is planned or has occurred that affects the well's construction or operation as an injection well, including work on the casing, tubing or packer (or for shallow Class V wells, the subsurface fluid emplacement network). Use one form per injection well. While reports or other information developed by contractors or service companies may be attached, this form must be signed by a responsible entity as described at 40 CFR 144.32. Note: operators closing Class V wells should use Form 7520-17.

NAME, ADDRESS, PHONE AND/OR EMAIL OF PERMITTEE: Enter the name and street address, city/town, state, and ZIP code of the permittee. Also provide an email address (if available) and/or a phone number.

PERMIT OR EPA ID NUMBER: Enter the well identification number or permit number assigned to the well by the EPA or the permitting authority.

API NUMBER: Enter the number assigned by the local jurisdiction (usually a State Oil and Gas Agency) using the American Petroleum Institute standard numbering system.

FULL WELL NAME: Enter the full name of the well or project.

Enter the **STATE** and **COUNTY** where the well is located. For States that do not have counties, use the name of that State's equivalent jurisdiction at a more local level.

WELL LOCATION: Fill in the complete township, range, and section to the nearest quarter-quarter section. A township is north or south of the baseline, and a range is east or west of the principal meridian (e.g., T12N, R34W). Also include the distance, in feet, from the nearest north or south line and nearest east or west line of the quarter-section. Also, enter the **latitude** and **longitude** of the well in decimal degrees, to five or six places if possible; be sure to include a negative sign for the longitude of a well in the Western Hemisphere and a negative sign for the latitude of a well in the Southern Hemisphere.

Enter the **WELL CLASS,** i.e., the class of injection well as defined in 40 CFR 144.6.

TIMING OF THE ACTION: Check ***Notice prior to work*** if the activity has not yet occurred (i.e., is planned). Check ***Report after work*** if the activity described has already occurred. As appropriate, include the date the activity is expected to start or the date the activity was completed. (Note this may not be available, e.g., for a plugging plan submitted with a permit application.)

TYPE OF ACTION: Check the appropriate box to describe the kind of activity being reported. Check ***Well Rework*** for work that was/will be performed on the well after it has already been in operation as an injection well. Check ***Plugging and Abandonment*** to report on plans for or descriptions of final closure/plugging after use as an injection well. Check ***Conversion to a Non-Injection Well*** if the well is to be converted to something other than an injection well.

Provide a **NARRATIVE DESCRIPTION** of the work planned to be performed, or that was performed. The narrative should include a description of the main procedures planned or that occurred during the work activity. A service company report, daily report, or similar document may be attached if it includes all the requested information and is clear and legible.

For well reworks, include the following information: The reason for the well rework; depths of activity; type of activity; changes to injection well configuration, well casing, or cement behind casing; any plug added to the well and its depth; any newly drilled interval and its depth; method(s) to demonstrate that the well has mechanical integrity (as applicable); and any deviations from the approved rework plan (as applicable).

For a well plugging plan, include the following information: Reason for the well plugging; number of plugs placed, and their depths; materials used as plugs (e.g., cast iron bridge plug, cement, cement retainer); method to set plugs; and wait-on-cement times, if any. Also provide one or more cost estimates from an independent firm in the business of plugging and abandoning wells to plug the well as described in the plan.

For well plugging affidavit, include the following information: Reason for the well plugging; number of plugs placed, and their depths; materials used as plugs (e.g., cast iron bridge plug, cement, cement retainer); method to set plugs; wait-on-cement times, if any; and any deviations from the approved plugging plan (if applicable).

For conversion to a non-injection well, include the following information: Depths of activity; type of activity; changes to injection well configuration, well casing, or cement behind casing; any plug added to the well and its depth; any newly drilled interval and its depth; depths of new perforations; and method(s) to demonstrate that the well has mechanical integrity (as applicable).

For all of the above activities, include a well sketch depicting the work, results of well tests/logging performed, service company tickets, and any other available information demonstrating how the work was/is to be performed. Also, specify whether depths are below ground surface, relative to Kelly bushing, etc.

CERTIFICATION: This form must be signed and dated by either: a responsible corporate officer for a corporation, by a general partner for a partnership, by the proprietor of a sole proprietorship, or by a principal executive or ranking elected official for a public agency.

PAPERWORK REDUCTION ACT NOTICE: The public reporting and recordkeeping burden for this collection of information is estimated to average between 6.0 and 7.9 hours per response, depending on the injection well class. Burden means the total time, effort, or financial resource expended by persons to generate, maintain, retain, or disclose or provide information to or for a Federal Agency. This includes the time needed to review instructions; develop, acquire, install, and utilize technology and systems for the purposes of collecting, validating, and verifying information, processing and maintaining information, and disclosing and providing information; adjust the existing ways to comply with any previously applicable instructions and requirements; train personnel to be able to respond to the collection of information; search data sources; complete and review the collection of information; and, transmit or otherwise disclose the information. An agency may not conduct or sponsor, and a person is not required to respond to, a collection of information unless it displays a currently valid OMB control number. Send comments on the Agency's need for this information, the accuracy of the provided burden estimates, and any suggested methods for minimizing respondent burden, including the use of automated collection techniques to Director, Collection Strategies Division, U.S. Environmental Protection Agency (2822), 1200 Pennsylvania Ave., NW., Washington, D.C. 20460. Include the OMB control number in any correspondence. Do not send the completed forms to this address.

PROPOSED DESIGN
INJECTION AND RECOVERY WELL

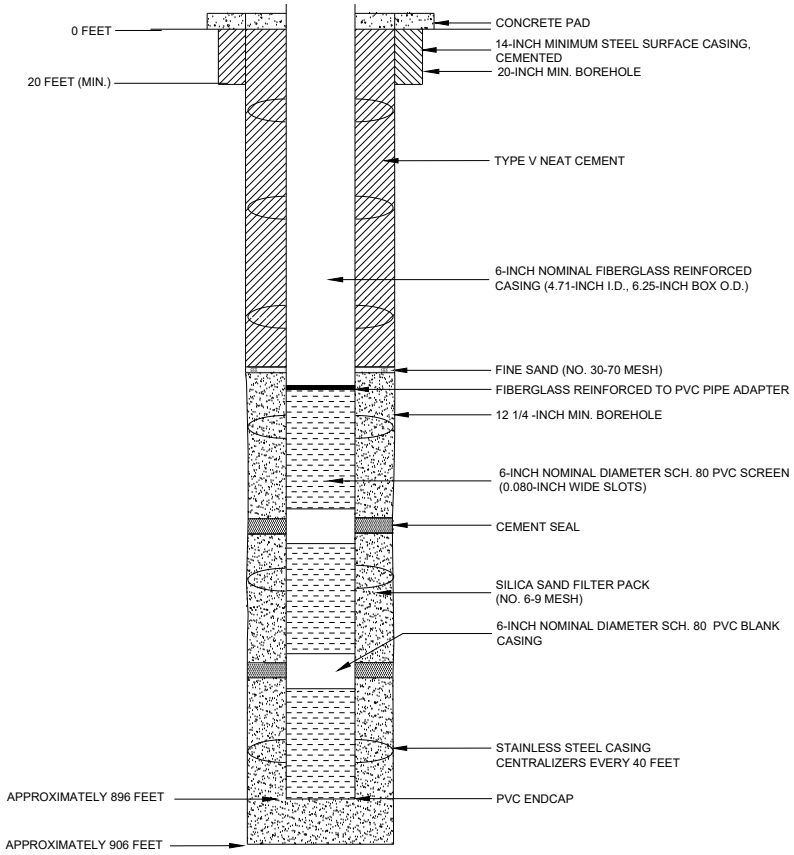

PROPOSED PLUGGING AND
ABANDONMENT
INJECTION AND RECOVERY WELL

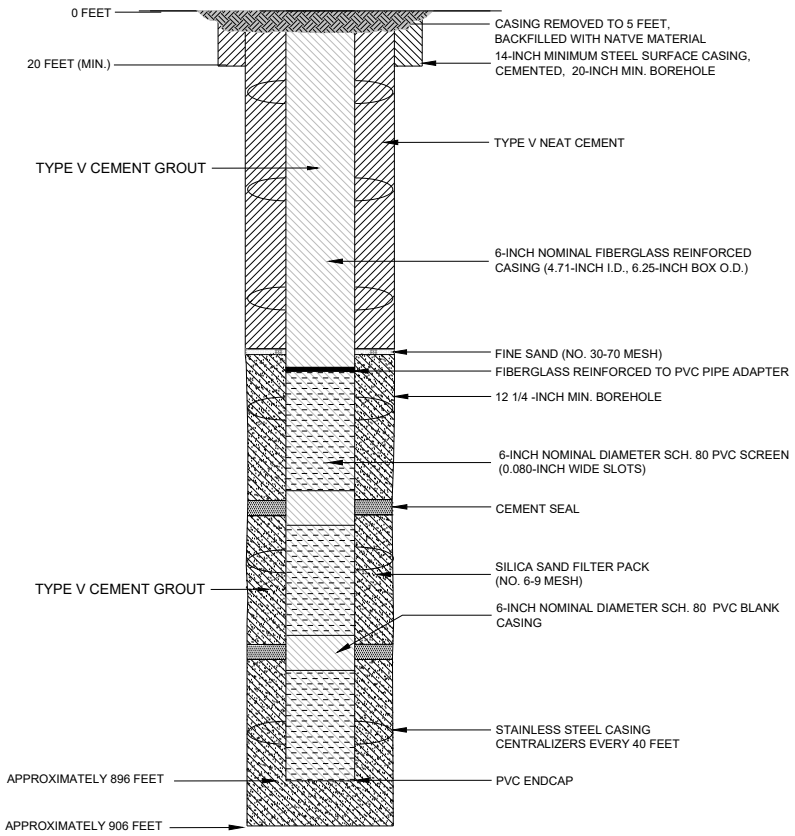

NOTES

1. WELL DESIGN DETAILS ARE BASED ON CORE HOLE AND WELL LOG RECORDS.

HALEY ALDRICH

FLORENCE COPPER, INC.
FLORENCE, ARIZONA

ABANDONMENT SCHEMATIC
RESOURCE BLOCK 82
TYPICAL INJECTION AND
RECOVERY WELL

SCALE: AS SHOWN
JULY 2019

FIGURE E-43a

Saved by: MNICHOLLS Printed: 7/25/2019 7:20 PM Sheet: HA-FIG-A-L(2)
\\HALEYALDRICH.COM\SHARE\PHX_COMMON\PROJECTS\FLORENCE COPPER\132473 FLORENCE GROUNDWATER PERMITTING\CAD\132473_000-OBSERVATION_WELL_CONSTRUCTION DIAGRAM.DWG

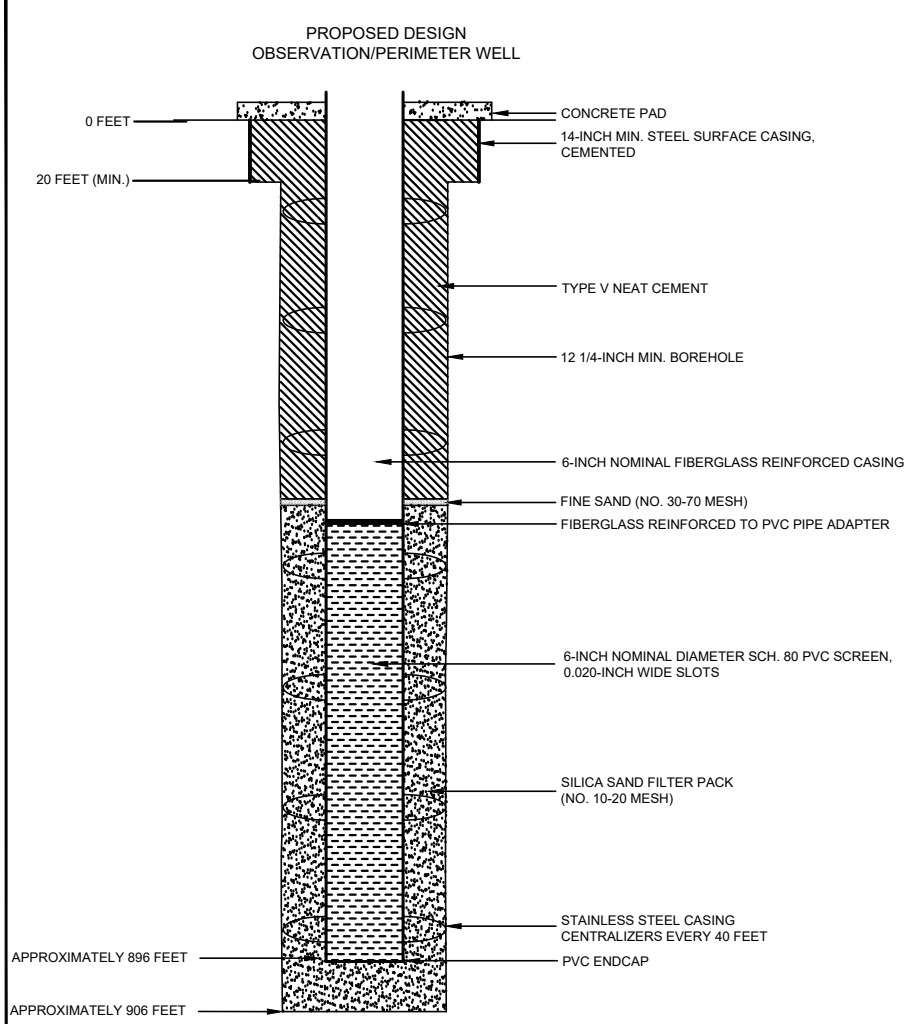

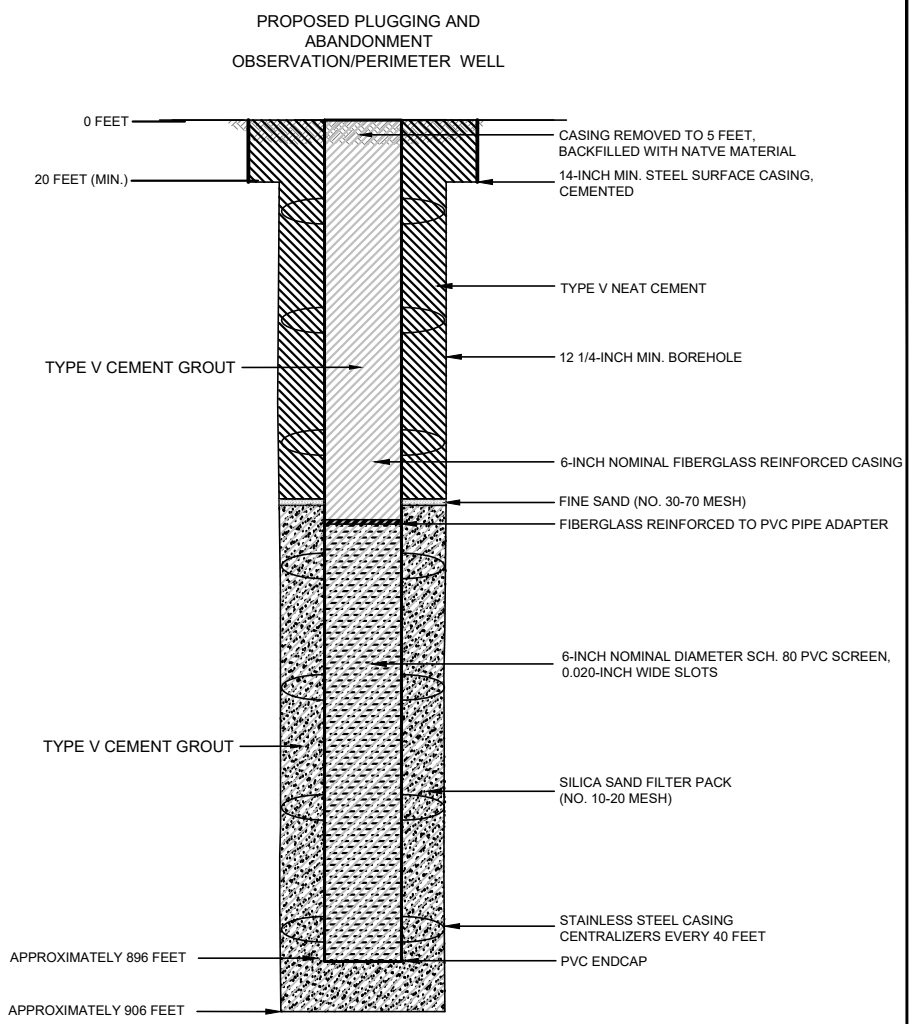

NOTES

1. WELL DESIGN DETAILS ARE BASED ON CORE HOLE AND WELL LOG RECORDS.

HALEY ALDRICH

FLORENCE COPPER, INC.
FLORENCE, ARIZONA

ABANDONMENT SCHEMATIC
RESOURCE BLOCK 82
OBSERVATION/PERIMETER WELL

JULY 2019
SCALE: AS SHOWN

FIGURE E-43b

TABLE E-43
WELLS WITHIN RESOURCE BLOCK 82
FLORENCE COPPER PROJECT
FLORENCE, ARIZONA

Well Number	Easting	Northing	Resource Block	Depth to Top of Bedrock (ft bgs)	Depth to Top of Injection Zone (ft bgs)	Depth to Bottom of Injection Zone (ft bgs)
1092	849674	744859	82	393	433	896
1093	849745	744929	82	393	433	896
1094	849816	745000	82	393	433	896
1095	849816	745071	82	393	433	896
1096	849745	745000	82	393	433	896
1097	849674	744929	82	393	433	896
1098	849604	744859	82	393	433	896
1104	849816	745141	82	393	433	896
1105	849745	745071	82	393	433	896
1106	849674	745000	82	393	433	896
1107	849604	744929	82	393	433	896
1108	849533	744859	82	393	433	896
1115	849816	744859	82	393	433	896
1116	849745	744859	82	393	433	896
1117	849816	744929	82	393	433	896
1118	849886	745071	82	393	433	896
1119	849886	744929	82	393	433	896
1120	849886	745000	82	393	433	896
1121	849887	745141	82	393	433	896
1137	849745	744646	82	393	433	896
1148	849674	744717	82	393	433	896
1154	849604	744788	82	393	433	896
1177	849816	744788	82	393	433	896
1178	849745	744788	82	393	433	896
1179	849674	744788	82	393	433	896
1180	849816	744717	82	393	433	896
1181	849745	744717	82	393	433	896
1192	849957	745071	82	393	433	896
1198	849957	745000	82	393	433	896
1226	849816	744576	82	393	433	896
1230	849816	744646	82	393	433	896
O22	849957	744788	82	393	433	896
O21	850028	744929	82	393	433	896
P43	849886	744717	82	393	433	896
P42	849886	744859	82	393	433	896
P41	849957	744929	82	393	433	896
P40	850028	745000	82	393	433	896

Notes:

ft bgs = feet below ground surface

OMB No. 2040-0042 Approval Expires 4/30/2022

United States Environmental Protection Agency

WELL REWORK RECORD, PLUGGING AND ABANDONMENT PLAN, OR PLUGGING AND ABANDONMENT AFFIDAVIT

Name and Address, Phone Number and/or Email of Permittee

Florence Copper Project
1575 W Hunt Hwy,
Florence, AZ 85132

Permit or EPA ID Number	API Number	Full Well Name
R9UIC-AZ3-FY11-1		Block 87 Wells - See Attached Table E-44

State	County
Arizona	Pinal

Locate well in two directions from nearest lines of quarter section and drilling unit

Surface Location

NW 1/4 of NW 1/4 of Section 28 Township 4S Range 9E

_____ ft. from (N/S) _____ Line of quarter section

_____ ft. from (E/W) _____ Line of quarter section.

Latitude 33.045744

Longitude -111.435476

See Attached Table for Individual Well Coordinates.

Well Class	Timing of Action (pick one)	Type of Action (pick one)
☐ Class I ☐ Class II ☑ Class III ☐ Class V	☑ Notice Prior to Work Date Expected to Commence January 2027 ☐ Report After Work Date Work Ended	☐ Well Rework ☑ Plugging and Abandonment ☐ Conversion to a Non-Injection Well

Provide a narrative description of the work planned to be performed, or that was performed. Use additional pages as necessary. See instructions.

This plugging and abandonment applies to wells Class III wells to be constructed in block 87. There are 34 Class III multi-use injection/ recovery wells, 2 dedicated Class III observation, and 4 Class III perimeter wells planned for construction in this block. The injection and recovery wells will be of uniform design, and will be used for injection and recovery on an alternate basis. Some of the injection and recovery wells will be used as perimeter and observation wells prior to well field build-out. The dedicated perimeter observation well will have a design and depth similar to the injection and recovery wells, but will not have a segmented well screen.

The work performed includes plugging and abandonment of the Class III wells in resource block 87. Plugging and abandonment will be accomplished following procedures defined in Attachment E of the application. Plugging and abandonment details are shown on the attached Figures E-44a and E-44b.

Certification

I certify under the penalty of law that I have personally examined and am familiar with the information submitted in this document and all attachments and that, based on my inquiry of those individuals immediately responsible for obtaining the information, I believe that the information is true, accurate, and complete. I am aware that there are significant penalties for submitting false information, including the possibliity of fine and imprisonment. (Ref. 40 CFR § 144.32)

Name and Official Title *(Please type or print)*	Signature	Date Signed
Dan Johnson, VP - General Manager		10/3/2019

INSTRUCTIONS FOR FORM 7520-19

This form replaces forms 7520-12 and 7520-14. Use this form only when work is planned or has occurred that affects the well's construction or operation as an injection well, including work on the casing, tubing or packer (or for shallow Class V wells, the subsurface fluid emplacement network). Use one form per injection well. While reports or other information developed by contractors or service companies may be attached, this form must be signed by a responsible entity as described at 40 CFR 144.32. Note: operators closing Class V wells should use Form 7520-17.

NAME, ADDRESS, PHONE AND/OR EMAIL OF PERMITTEE: Enter the name and street address, city/town, state, and ZIP code of the permittee. Also provide an email address (if available) and/or a phone number.

PERMIT OR EPA ID NUMBER: Enter the well identification number or permit number assigned to the well by the EPA or the permitting authority.

API NUMBER: Enter the number assigned by the local jurisdiction (usually a State Oil and Gas Agency) using the American Petroleum Institute standard numbering system.

FULL WELL NAME: Enter the full name of the well or project.

Enter the **STATE** and **COUNTY** where the well is located. For States that do not have counties, use the name of that State's equivalent jurisdiction at a more local level.

WELL LOCATION: Fill in the complete township, range, and section to the nearest quarter-quarter section. A township is north or south of the baseline, and a range is east or west of the principal meridian (e.g., T12N, R34W). Also include the distance, in feet, from the nearest north or south line and nearest east or west line of the quarter-section. Also, enter the **latitude** and **longitude** of the well in decimal degrees, to five or six places if possible; be sure to include a negative sign for the longitude of a well in the Western Hemisphere and a negative sign for the latitude of a well in the Southern Hemisphere.

Enter the **WELL CLASS,** i.e., the class of injection well as defined in 40 CFR 144.6.

TIMING OF THE ACTION: Check ***Notice prior to work*** if the activity has not yet occurred (i.e., is planned). Check ***Report after work*** if the activity described has already occurred. As appropriate, include the date the activity is expected to start or the date the activity was completed. (Note this may not be available, e.g., for a plugging plan submitted with a permit application.)

TYPE OF ACTION: Check the appropriate box to describe the kind of activity being reported. Check ***Well Rework*** for work that was/will be performed on the well after it has already been in operation as an injection well. Check ***Plugging and Abandonment*** to report on plans for or descriptions of final closure/plugging after use as an injection well. Check ***Conversion to a Non-Injection Well*** if the well is to be converted to something other than an injection well.

Provide a **NARRATIVE DESCRIPTION** of the work planned to be performed, or that was performed. The narrative should include a description of the main procedures planned or that occurred during the work activity. A service company report, daily report, or similar document may be attached if it includes all the requested information and is clear and legible.

For well reworks, include the following information: The reason for the well rework; depths of activity; type of activity; changes to injection well configuration, well casing, or cement behind casing; any plug added to the well and its depth; any newly drilled interval and its depth; method(s) to demonstrate that the well has mechanical integrity (as applicable); and any deviations from the approved rework plan (as applicable).

For a well plugging plan, include the following information: Reason for the well plugging; number of plugs placed, and their depths; materials used as plugs (e.g., cast iron bridge plug, cement, cement retainer); method to set plugs; and wait-on-cement times, if any. Also provide one or more cost estimates from an independent firm in the business of plugging and abandoning wells to plug the well as described in the plan.

For well plugging affidavit, include the following information: Reason for the well plugging; number of plugs placed, and their depths; materials used as plugs (e.g., cast iron bridge plug, cement, cement retainer); method to set plugs; wait-on-cement times, if any; and any deviations from the approved plugging plan (if applicable).

For conversion to a non-injection well, include the following information: Depths of activity; type of activity; changes to injection well configuration, well casing, or cement behind casing; any plug added to the well and its depth; any newly drilled interval and its depth; depths of new perforations; and method(s) to demonstrate that the well has mechanical integrity (as applicable).

For all of the above activities, include a well sketch depicting the work, results of well tests/logging performed, service company tickets, and any other available information demonstrating how the work was/is to be performed. Also, specify whether depths are below ground surface, relative to Kelly bushing, etc.

CERTIFICATION: This form must be signed and dated by either: a responsible corporate officer for a corporation, by a general partner for a partnership, by the proprietor of a sole proprietorship, or by a principal executive or ranking elected official for a public agency.

PAPERWORK REDUCTION ACT NOTICE: The public reporting and recordkeeping burden for this collection of information is estimated to average between 6.0 and 7.9 hours per response, depending on the injection well class. Burden means the total time, effort, or financial resource expended by persons to generate, maintain, retain, or disclose or provide information to or for a Federal Agency. This includes the time needed to review instructions; develop, acquire, install, and utilize technology and systems for the purposes of collecting, validating, and verifying information, processing and maintaining information, and disclosing and providing information; adjust the existing ways to comply with any previously applicable instructions and requirements; train personnel to be able to respond to the collection of information; search data sources; complete and review the collection of information; and, transmit or otherwise disclose the information. An agency may not conduct or sponsor, and a person is not required to respond to, a collection of information unless it displays a currently valid OMB control number. Send comments on the Agency's need for this information, the accuracy of the provided burden estimates, and any suggested methods for minimizing respondent burden, including the use of automated collection techniques to Director, Collection Strategies Division, U.S. Environmental Protection Agency (2822), 1200 Pennsylvania Ave., NW., Washington, D.C. 20460. Include the OMB control number in any correspondence. Do not send the completed forms to this address.

PROPOSED DESIGN
INJECTION AND RECOVERY WELL

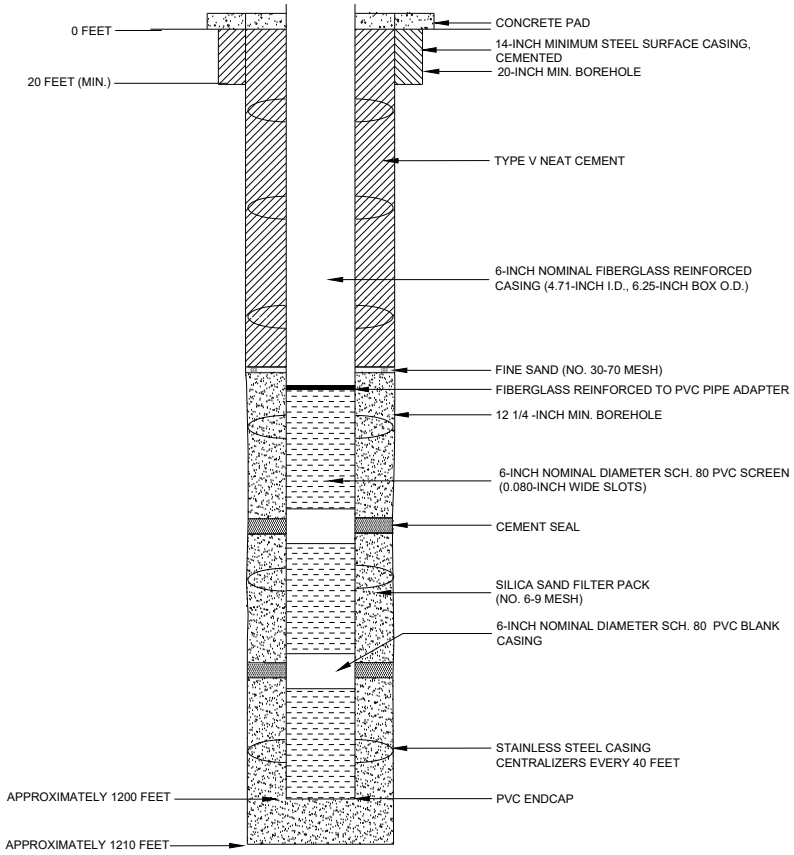

PROPOSED PLUGGING AND
ABANDONMENT
INJECTION AND RECOVERY WELL

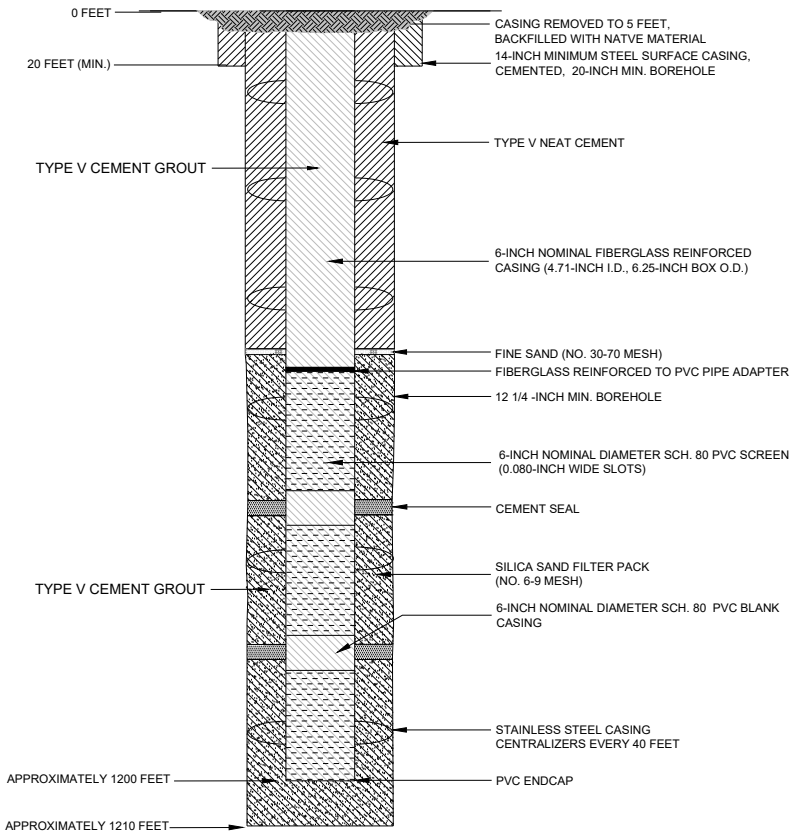

NOTES

1. WELL DESIGN DETAILS ARE BASED ON CORE HOLE AND WELL LOG RECORDS.

HALEY ALDRICH

FLORENCE COPPER, INC.
FLORENCE, ARIZONA

ABANDONMENT SCHEMATIC
RESOURCE BLOCK 87
TYPICAL INJECTION AND
RECOVERY WELL

SCALE: AS SHOWN
JULY 2019

FIGURE E-44a

Saved by: MNICHOLLS Printed: 7/25/2019 7:20 PM Sheet: HA-FIG-A-L(2)
\\HALEYALDRICH.COM\SHARE\PHX_COMMON\PROJECTS\FLORENCE COPPER\132473 FLORENCE GROUNDWATER PERMITTING\CAD\132473_000-OBSERVATION_WELL_CONSTRUCTION DIAGRAM.DWG

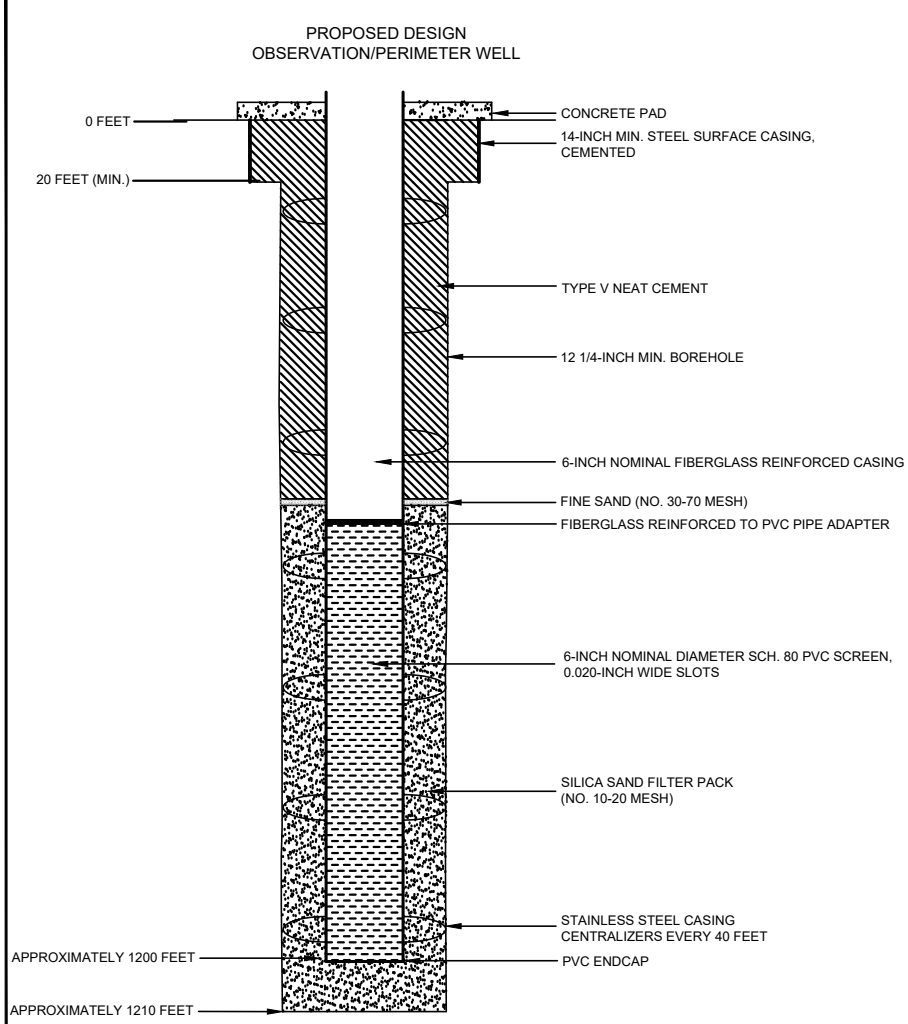

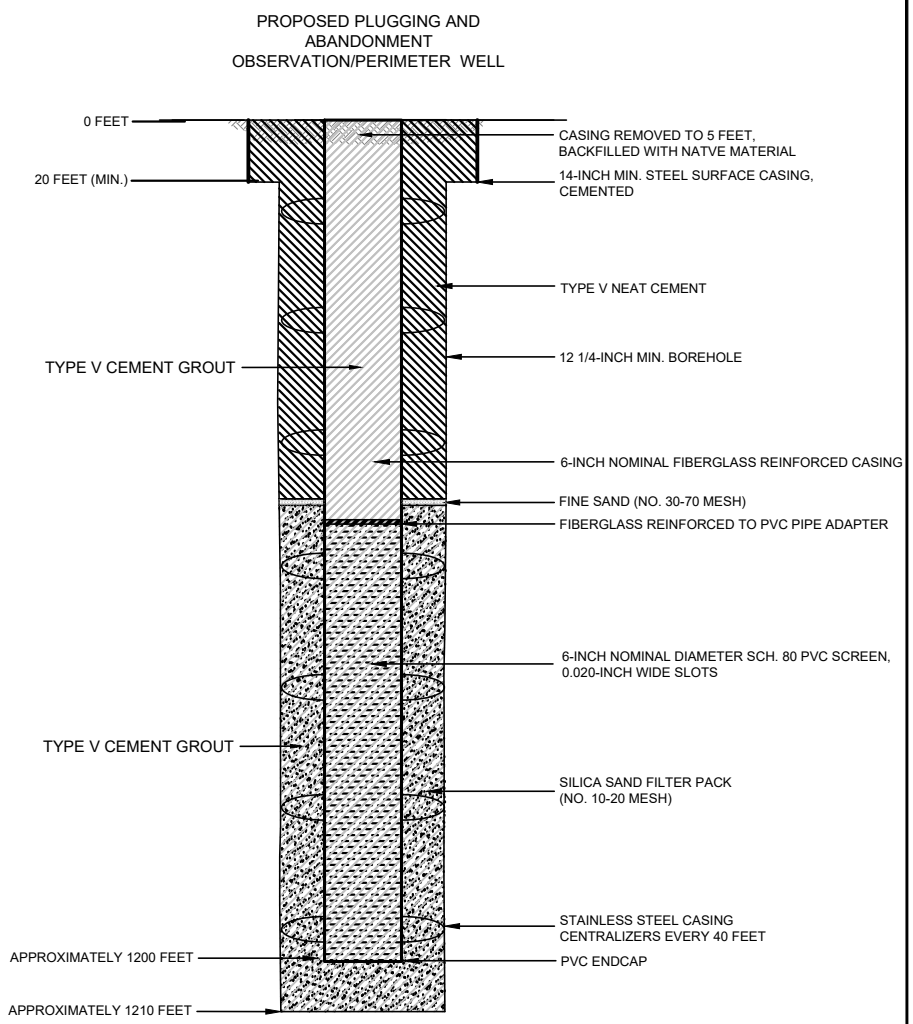

NOTES

1. WELL DESIGN DETAILS ARE BASED ON CORE HOLE AND WELL LOG RECORDS.

HALEY ALDRICH

FLORENCE COPPER, INC.
FLORENCE, ARIZONA

ABANDONMENT SCHEMATIC
RESOURCE BLOCK 87
OBSERVATION/PERIMETER WELL

JULY 2019
SCALE: AS SHOWN

FIGURE E-44b

TABLE E-44
WELLS WITHIN RESOURCE BLOCK 87
FLORENCE COPPER PROJECT
FLORENCE, ARIZONA

Well Number	Easting	Northing	Resource Block	Depth to Top of Bedrock (ft bgs)	Depth to Top of Injection Zone (ft bgs)	Depth to Bottom of Injection Zone (ft bgs)
1765	847624	744505	87	740	780	1200
1766	847624	744434	87	740	780	1200
1771	847694	744505	87	740	780	1200
1780	847411	744293	87	740	780	1200
1781	847482	744364	87	740	780	1200
1782	847553	744434	87	740	780	1200
1783	847482	744293	87	740	780	1200
1784	847553	744364	87	740	780	1200
1786	847411	744222	87	740	780	1200
1904	847553	744505	87	740	780	1200
1905	847482	744576	87	740	780	1200
1906	847553	744576	87	740	780	1200
1907	847412	744646	87	740	780	1200
1908	847482	744646	87	740	780	1200
1909	847341	744717	87	740	780	1200
1910	847412	744717	87	740	780	1200
1911	847341	744788	87	740	780	1200
1914	847412	744788	87	740	780	1200
1916	847482	744717	87	740	780	1200
1917	847553	744646	87	740	780	1200
1918	847625	744575	87	740	780	1200
1925	847482	744434	87	740	780	1200
1926	847412	744364	87	740	780	1200
1930	847341	744434	87	740	780	1200
1931	847412	744505	87	740	780	1200
1932	847482	744505	87	740	780	1200
1933	847412	744434	87	740	780	1200
1934	847341	744364	87	740	780	1200
1939	847341	744576	87	740	780	1200
1940	847412	744576	87	740	780	1200
1941	847341	744505	87	740	780	1200
1948	847270	744646	87	740	780	1200
1949	847341	744646	87	740	780	1200
1954	847270	744717	87	740	780	1200
O33	847270	744222	87	740	780	1200
O34	847200	744505	87	740	780	1200
P64	847341	744152	87	740	780	1200
P65	847341	744293	87	740	780	1200
P66	847270	744434	87	740	780	1200
P67	847270	744576	87	740	780	1200

Notes:

ft bgs = feet below ground surface

OMB No. 2040-0042 Approval Expires 4/30/2022

United States Environmental Protection Agency

WELL REWORK RECORD, PLUGGING AND ABANDONMENT PLAN, OR PLUGGING AND ABANDONMENT AFFIDAVIT

Name and Address, Phone Number and/or Email of Permittee

Florence Copper Project
1575 W Hunt Hwy,
Florence, AZ 85132

Permit or EPA ID Number	API Number	Full Well Name
R9UIC-AZ3-FY11-1		Block 88 Wells - See Attached Table E-45

State	County
Arizona	Pinal

Locate well in two directions from nearest lines of quarter section and drilling unit

Surface Location

NE 1/4 of NW 1/4 of Section 33 Township 4S Range 9E

ft. from (N/S) Line of quarter section

ft. from (E/W) Line of quarter section.

Latitude 33.045677

Longitude -111.433451

See Attached Table for Individual Well Coordinates.

Well Class	Timing of Action (pick one)	Type of Action (pick one)
☐ Class I ☐ Class II ☑ Class III ☐ Class V	☑ Notice Prior to Work Date Expected to Commence January 2027 ☐ Report After Work Date Work Ended	☐ Well Rework ☑ Plugging and Abandonment ☐ Conversion to a Non-Injection Well

Provide a narrative description of the work planned to be performed, or that was performed. Use additional pages as necessary. See instructions.

This plugging and abandonment applies to wells Class III wells to be constructed in block 88. There are 49 Class III multi-use injection/ recovery wells, planned for construction in this block. The injection and recovery wells will be of uniform design, and will be used for injection and recovery on an alternate basis. Some of the injection and recovery wells will be used as perimeter and observation wells prior to well field build-out.

The work performed includes plugging and abandonment of the Class III wells in resource block 88. Plugging and abandonment will be accomplished following procedures defined in Attachment E of the application. Plugging and abandonment details are shown on the attached Figure E-45.

Certification

I certify under the penalty of law that I have personally examined and am familiar with the information submitted in this document and all attachments and that, based on my inquiry of those individuals immediately responsible for obtaining the information, I believe that the information is true, accurate, and complete. I am aware that there are significant penalties for submitting false information, including the possibliity of fine and imprisonment. (Ref. 40 CFR § 144.32)

Name and Official Title *(Please type or print)*	Signature	Date Signed
Dan Johnson, VP - General Manager		10/3/2019

INSTRUCTIONS FOR FORM 7520-19

This form replaces forms 7520-12 and 7520-14. Use this form only when work is planned or has occurred that affects the well's construction or operation as an injection well, including work on the casing, tubing or packer (or for shallow Class V wells, the subsurface fluid emplacement network). Use one form per injection well. While reports or other information developed by contractors or service companies may be attached, this form must be signed by a responsible entity as described at 40 CFR 144.32. Note: operators closing Class V wells should use Form 7520-17.

NAME, ADDRESS, PHONE AND/OR EMAIL OF PERMITTEE: Enter the name and street address, city/town, state, and ZIP code of the permittee. Also provide an email address (if available) and/or a phone number.

PERMIT OR EPA ID NUMBER: Enter the well identification number or permit number assigned to the well by the EPA or the permitting authority.

API NUMBER: Enter the number assigned by the local jurisdiction (usually a State Oil and Gas Agency) using the American Petroleum Institute standard numbering system.

FULL WELL NAME: Enter the full name of the well or project.

Enter the **STATE** and **COUNTY** where the well is located. For States that do not have counties, use the name of that State's equivalent jurisdiction at a more local level.

WELL LOCATION: Fill in the complete township, range, and section to the nearest quarter-quarter section. A township is north or south of the baseline, and a range is east or west of the principal meridian (e.g., T12N, R34W). Also include the distance, in feet, from the nearest north or south line and nearest east or west line of the quarter-section. Also, enter the **latitude** and **longitude** of the well in decimal degrees, to five or six places if possible; be sure to include a negative sign for the longitude of a well in the Western Hemisphere and a negative sign for the latitude of a well in the Southern Hemisphere.

Enter the **WELL CLASS,** i.e., the class of injection well as defined in 40 CFR 144.6.

TIMING OF THE ACTION: Check ***Notice prior to work*** if the activity has not yet occurred (i.e., is planned). Check ***Report after work*** if the activity described has already occurred. As appropriate, include the date the activity is expected to start or the date the activity was completed. (Note this may not be available, e.g., for a plugging plan submitted with a permit application.)

TYPE OF ACTION: Check the appropriate box to describe the kind of activity being reported. Check ***Well Rework*** for work that was/will be performed on the well after it has already been in operation as an injection well. Check ***Plugging and Abandonment*** to report on plans for or descriptions of final closure/plugging after use as an injection well. Check ***Conversion to a Non-Injection Well*** if the well is to be converted to something other than an injection well.

Provide a **NARRATIVE DESCRIPTION** of the work planned to be performed, or that was performed. The narrative should include a description of the main procedures planned or that occurred during the work activity. A service company report, daily report, or similar document may be attached if it includes all the requested information and is clear and legible.

For well reworks, include the following information: The reason for the well rework; depths of activity; type of activity; changes to injection well configuration, well casing, or cement behind casing; any plug added to the well and its depth; any newly drilled interval and its depth; method(s) to demonstrate that the well has mechanical integrity (as applicable); and any deviations from the approved rework plan (as applicable).

For a well plugging plan, include the following information: Reason for the well plugging; number of plugs placed, and their depths; materials used as plugs (e.g., cast iron bridge plug, cement, cement retainer); method to set plugs; and wait-on-cement times, if any. Also provide one or more cost estimates from an independent firm in the business of plugging and abandoning wells to plug the well as described in the plan.

For well plugging affidavit, include the following information: Reason for the well plugging; number of plugs placed, and their depths; materials used as plugs (e.g., cast iron bridge plug, cement, cement retainer); method to set plugs; wait-on-cement times, if any; and any deviations from the approved plugging plan (if applicable).

For conversion to a non-injection well, include the following information: Depths of activity; type of activity; changes to injection well configuration, well casing, or cement behind casing; any plug added to the well and its depth; any newly drilled interval and its depth; depths of new perforations; and method(s) to demonstrate that the well has mechanical integrity (as applicable).

For all of the above activities, include a well sketch depicting the work, results of well tests/logging performed, service company tickets, and any other available information demonstrating how the work was/is to be performed. Also, specify whether depths are below ground surface, relative to Kelly bushing, etc.

CERTIFICATION: This form must be signed and dated by either: a responsible corporate officer for a corporation, by a general partner for a partnership, by the proprietor of a sole proprietorship, or by a principal executive or ranking elected official for a public agency.

PAPERWORK REDUCTION ACT NOTICE: The public reporting and recordkeeping burden for this collection of information is estimated to average between 6.0 and 7.9 hours per response, depending on the injection well class. Burden means the total time, effort, or financial resource expended by persons to generate, maintain, retain, or disclose or provide information to or for a Federal Agency. This includes the time needed to review instructions; develop, acquire, install, and utilize technology and systems for the purposes of collecting, validating, and verifying information, processing and maintaining information, and disclosing and providing information; adjust the existing ways to comply with any previously applicable instructions and requirements; train personnel to be able to respond to the collection of information; search data sources; complete and review the collection of information; and, transmit or otherwise disclose the information. An agency may not conduct or sponsor, and a person is not required to respond to, a collection of information unless it displays a currently valid OMB control number. Send comments on the Agency's need for this information, the accuracy of the provided burden estimates, and any suggested methods for minimizing respondent burden, including the use of automated collection techniques to Director, Collection Strategies Division, U.S. Environmental Protection Agency (2822), 1200 Pennsylvania Ave., NW., Washington, D.C. 20460. Include the OMB control number in any correspondence. Do not send the completed forms to this address.

PROPOSED DESIGN
INJECTION AND RECOVERY WELL

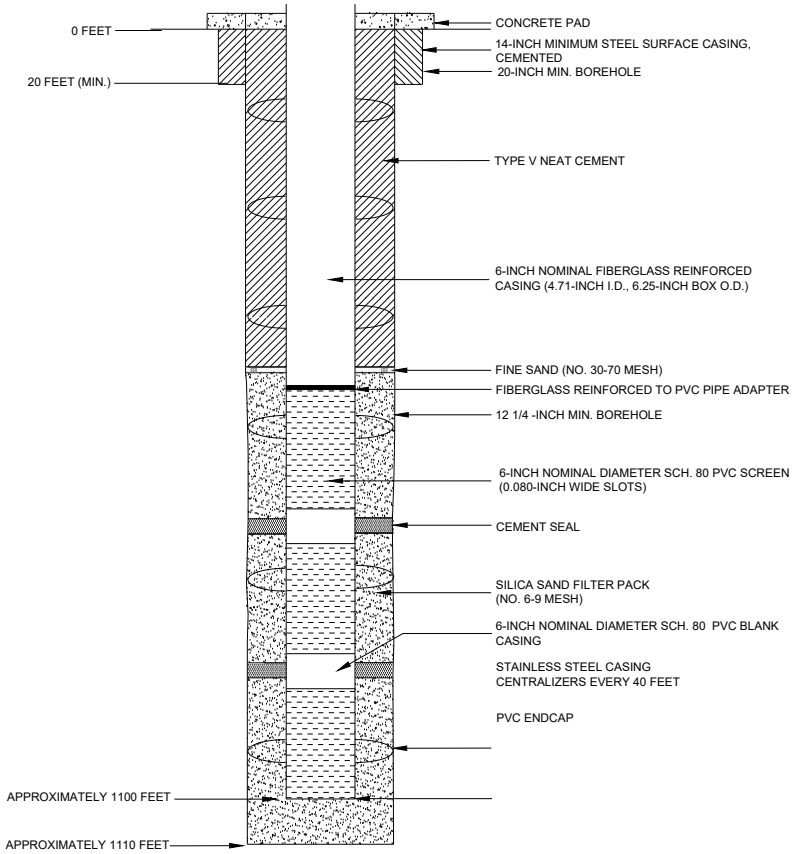

PROPOSED PLUGGING AND
ABANDONMENT
INJECTION AND RECOVERY WELL

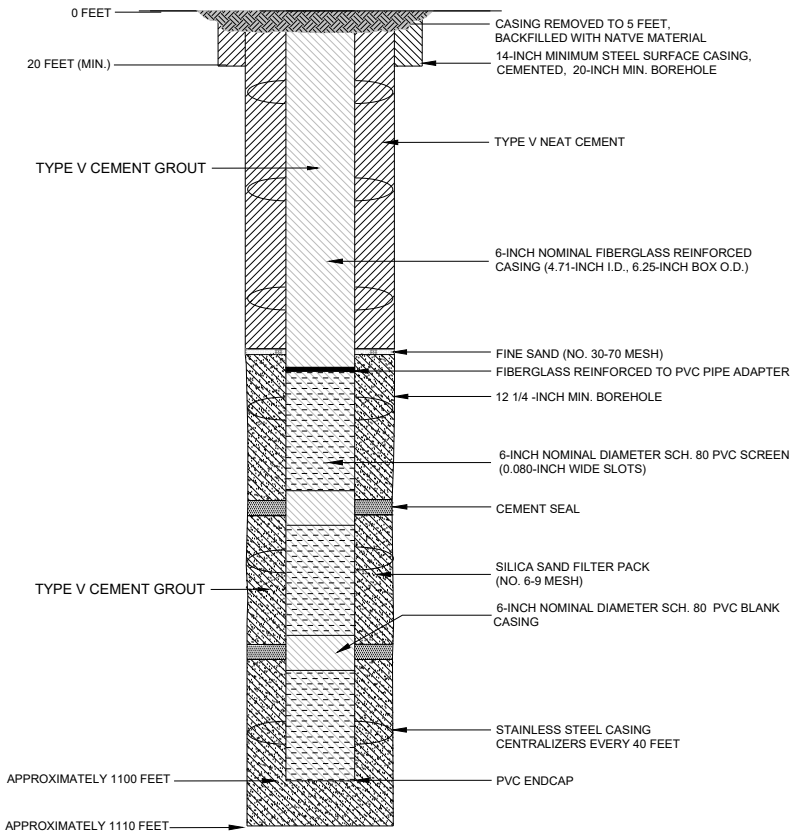

NOTES

1. WELL DESIGN DETAILS ARE BASED ON CORE HOLE AND WELL LOG RECORDS.

HALEY ALDRICH

FLORENCE COPPER, INC.
FLORENCE, ARIZONA

ABANDONMENT SCHEMATIC
RESOURCE BLOCK 88
TYPICAL INJECTION AND
RECOVERY WELL

SCALE: AS SHOWN
JULY 2019

FIGURE E-45

TABLE E-45
WELLS WITHIN RESOURCE BLOCK 88
FLORENCE COPPER PROJECT
FLORENCE, ARIZONA

Well Number	Easting	Northing	Resource Block	Depth to Top of Bedrock (ft bgs)	Depth to Top of Injection Zone (ft bgs)	Depth to Bottom of Injection Zone (ft bgs)
1257	848260	744364	88	560	600	1100
1258	848331	744434	88	560	600	1100
1259	848402	744505	88	560	600	1100
1265	848331	744505	88	560	600	1100
1266	848260	744434	88	560	600	1100
1267	848189	744364	88	560	600	1100
1268	848189	744293	88	560	600	1100
1269	848119	744293	88	560	600	1100
1289	848048	744222	88	560	600	1100
1789	847977	744434	88	560	600	1100
1790	847977	744505	88	560	600	1100
1791	847906	744434	88	560	600	1100
1866	847977	744293	88	560	600	1100
1864	847765	744505	88	560	600	1100
1861	847836	744434	88	560	600	1100
1856	847906	744364	88	560	600	1100
1830	848048	744717	88	560	600	1100
1829	848119	744717	88	560	600	1100
1828	848189	744717	88	560	600	1100
1827	848048	744788	88	560	600	1100
1826	848119	744788	88	560	600	1100
1823	848048	744647	88	560	600	1100
1792	847836	744505	88	560	600	1100
1793	847906	744576	88	560	600	1100
1794	847977	744576	88	560	600	1100
1795	847906	744505	88	560	600	1100
1796	847906	744647	88	560	600	1100
1797	847836	744576	88	560	600	1100
1798	847977	744717	88	560	600	1100
1799	847977	744647	88	560	600	1100
1800	847977	744364	88	560	600	1100
1801	848189	744435	88	560	600	1100
1822	848119	744647	88	560	600	1100
1821	848049	744575	88	560	600	1100
1820	848048	744434	88	560	600	1100
1819	848048	744364	88	560	600	1100
1818	848119	744364	88	560	600	1100
1817	848048	744293	88	560	600	1100
1816	848048	744505	88	560	600	1100

TABLE E-45
WELLS WITHIN RESOURCE BLOCK 88
FLORENCE COPPER PROJECT
FLORENCE, ARIZONA

Well Number	Easting	Northing	Resource Block	Depth to Top of Bedrock (ft bgs)	Depth to Top of Injection Zone (ft bgs)	Depth to Bottom of Injection Zone (ft bgs)
1815	848119	744576	88	560	600	1100
1814	848189	744647	88	560	600	1100
1811	848260	744647	88	560	600	1100
1810	848189	744576	88	560	600	1100
1809	848119	744505	88	560	600	1100
1808	848119	744434	88	560	600	1100
1807	848189	744505	88	560	600	1100
1806	848260	744576	88	560	600	1100
1803	848331	744576	88	560	600	1100
1802	848260	744505	88	560	600	1100

Notes:

ft bgs = feet below ground surface

OMB No. 2040-0042 Approval Expires 4/30/2022

United States Environmental Protection Agency

WELL REWORK RECORD, PLUGGING AND ABANDONMENT PLAN, OR PLUGGING AND ABANDONMENT AFFIDAVIT

Name and Address, Phone Number and/or Email of Permittee

Florence Copper Project
1575 W Hunt Hwy,
Florence, AZ 85132

Permit or EPA ID Number	API Number	Full Well Name
R9UIC-AZ3-FY11-1		Block 89 Wells - See Attached Table E-46

State	County
Arizona	Pinal

Locate well in two directions from nearest lines of quarter section and drilling unit

Surface Location

NE 1/4 of NW 1/4 of Section 33 Township 4S Range 9E

_____ ft. from (N/S) _____ Line of quarter section

_____ ft. from (E/W) _____ Line of quarter section.

Latitude 33.045680

Longitude -111.431128

See Attached Table for Individual Well Coordinates.

Well Class	Timing of Action (pick one)	Type of Action (pick one)
☐ Class I ☐ Class II ☑ Class III ☐ Class V	☑ Notice Prior to Work Date Expected to Commence January 2027 ☐ Report After Work Date Work Ended	☐ Well Rework ☑ Plugging and Abandonment ☐ Conversion to a Non-Injection Well

Provide a narrative description of the work planned to be performed, or that was performed. Use additional pages as necessary. See instructions.

This plugging and abandonment applies to wells Class III wells to be constructed in block 89. There are 50 Class III multi-use injection/ recovery wells, planned for construction in this block. The injection and recovery wells will be of uniform design, and will be used for injection and recovery on an alternate basis. Some of the injection and recovery wells will be used as perimeter and observation wells prior to well field build-out.

The work performed includes plugging and abandonment of the Class III wells in resource block 89. Plugging and abandonment will be accomplished following procedures defined in Attachment E of the application. Plugging and abandonment details are shown on the attached Figure E-46.

Certification

I certify under the penalty of law that I have personally examined and am familiar with the information submitted in this document and all attachments and that, based on my inquiry of those individuals immediately responsible for obtaining the information, I believe that the information is true, accurate, and complete. I am aware that there are significant penalties for submitting false information, including the possibliity of fine and imprisonment. (Ref. 40 CFR § 144.32)

Name and Official Title *(Please type or print)*	Signature	Date Signed
Dan Johnson, VP - General Manager		10/3/2019

INSTRUCTIONS FOR FORM 7520-19

This form replaces forms 7520-12 and 7520-14. Use this form only when work is planned or has occurred that affects the well's construction or operation as an injection well, including work on the casing, tubing or packer (or for shallow Class V wells, the subsurface fluid emplacement network). Use one form per injection well. While reports or other information developed by contractors or service companies may be attached, this form must be signed by a responsible entity as described at 40 CFR 144.32. Note: operators closing Class V wells should use Form 7520-17.

NAME, ADDRESS, PHONE AND/OR EMAIL OF PERMITTEE: Enter the name and street address, city/town, state, and ZIP code of the permittee. Also provide an email address (if available) and/or a phone number.

PERMIT OR EPA ID NUMBER: Enter the well identification number or permit number assigned to the well by the EPA or the permitting authority.

API NUMBER: Enter the number assigned by the local jurisdiction (usually a State Oil and Gas Agency) using the American Petroleum Institute standard numbering system.

FULL WELL NAME: Enter the full name of the well or project.

Enter the **STATE** and **COUNTY** where the well is located. For States that do not have counties, use the name of that State's equivalent jurisdiction at a more local level.

WELL LOCATION: Fill in the complete township, range, and section to the nearest quarter-quarter section. A township is north or south of the baseline, and a range is east or west of the principal meridian (e.g., T12N, R34W). Also include the distance, in feet, from the nearest north or south line and nearest east or west line of the quarter-section. Also, enter the **latitude** and **longitude** of the well in decimal degrees, to five or six places if possible; be sure to include a negative sign for the longitude of a well in the Western Hemisphere and a negative sign for the latitude of a well in the Southern Hemisphere.

Enter the **WELL CLASS,** i.e., the class of injection well as defined in 40 CFR 144.6.

TIMING OF THE ACTION: Check ***Notice prior to work*** if the activity has not yet occurred (i.e., is planned). Check ***Report after work*** if the activity described has already occurred. As appropriate, include the date the activity is expected to start or the date the activity was completed. (Note this may not be available, e.g., for a plugging plan submitted with a permit application.)

TYPE OF ACTION: Check the appropriate box to describe the kind of activity being reported. Check ***Well Rework*** for work that was/will be performed on the well after it has already been in operation as an injection well. Check ***Plugging and Abandonment*** to report on plans for or descriptions of final closure/plugging after use as an injection well. Check ***Conversion to a Non-Injection Well*** if the well is to be converted to something other than an injection well.

Provide a **NARRATIVE DESCRIPTION** of the work planned to be performed, or that was performed. The narrative should include a description of the main procedures planned or that occurred during the work activity. A service company report, daily report, or similar document may be attached if it includes all the requested information and is clear and legible.

For well reworks, include the following information: The reason for the well rework; depths of activity; type of activity; changes to injection well configuration, well casing, or cement behind casing; any plug added to the well and its depth; any newly drilled interval and its depth; method(s) to demonstrate that the well has mechanical integrity (as applicable); and any deviations from the approved rework plan (as applicable).

For a well plugging plan, include the following information: Reason for the well plugging; number of plugs placed, and their depths; materials used as plugs (e.g., cast iron bridge plug, cement, cement retainer); method to set plugs; and wait-on-cement times, if any. Also provide one or more cost estimates from an independent firm in the business of plugging and abandoning wells to plug the well as described in the plan.

For well plugging affidavit, include the following information: Reason for the well plugging; number of plugs placed, and their depths; materials used as plugs (e.g., cast iron bridge plug, cement, cement retainer); method to set plugs; wait-on-cement times, if any; and any deviations from the approved plugging plan (if applicable).

For conversion to a non-injection well, include the following information: Depths of activity; type of activity; changes to injection well configuration, well casing, or cement behind casing; any plug added to the well and its depth; any newly drilled interval and its depth; depths of new perforations; and method(s) to demonstrate that the well has mechanical integrity (as applicable).

For all of the above activities, include a well sketch depicting the work, results of well tests/logging performed, service company tickets, and any other available information demonstrating how the work was/is to be performed. Also, specify whether depths are below ground surface, relative to Kelly bushing, etc.

CERTIFICATION: This form must be signed and dated by either: a responsible corporate officer for a corporation, by a general partner for a partnership, by the proprietor of a sole proprietorship, or by a principal executive or ranking elected official for a public agency.

PAPERWORK REDUCTION ACT NOTICE: The public reporting and recordkeeping burden for this collection of information is estimated to average between 6.0 and 7.9 hours per response, depending on the injection well class. Burden means the total time, effort, or financial resource expended by persons to generate, maintain, retain, or disclose or provide information to or for a Federal Agency. This includes the time needed to review instructions; develop, acquire, install, and utilize technology and systems for the purposes of collecting, validating, and verifying information, processing and maintaining information, and disclosing and providing information; adjust the existing ways to comply with any previously applicable instructions and requirements; train personnel to be able to respond to the collection of information; search data sources; complete and review the collection of information; and, transmit or otherwise disclose the information. An agency may not conduct or sponsor, and a person is not required to respond to, a collection of information unless it displays a currently valid OMB control number. Send comments on the Agency's need for this information, the accuracy of the provided burden estimates, and any suggested methods for minimizing respondent burden, including the use of automated collection techniques to Director, Collection Strategies Division, U.S. Environmental Protection Agency (2822), 1200 Pennsylvania Ave., NW., Washington, D.C. 20460. Include the OMB control number in any correspondence. Do not send the completed forms to this address.

PROPOSED DESIGN
INJECTION AND RECOVERY WELL

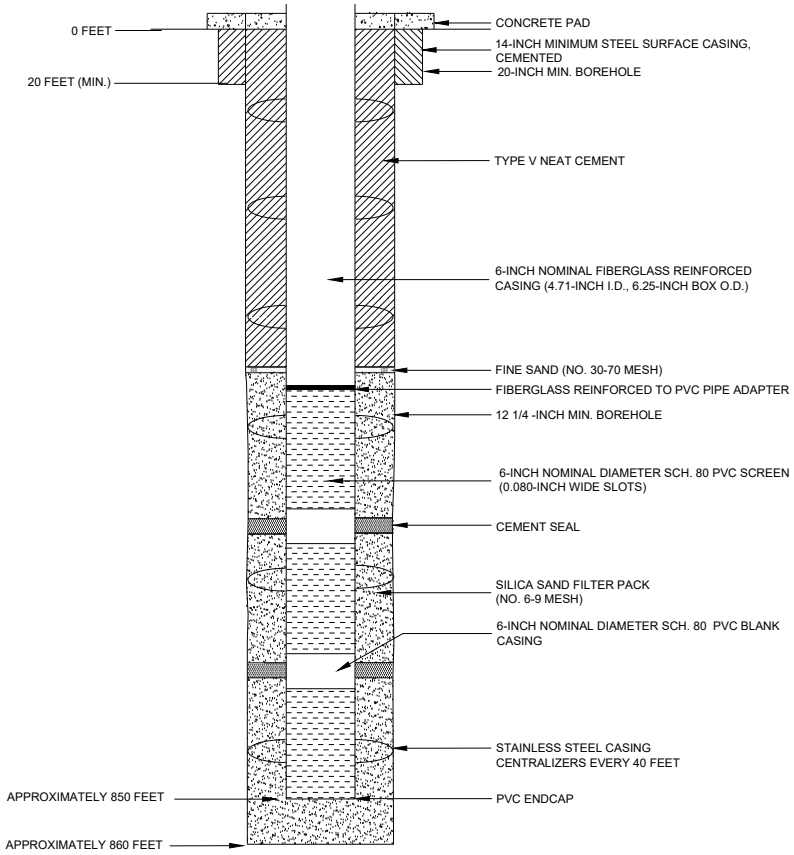

PROPOSED PLUGGING AND
ABANDONMENT
INJECTION AND RECOVERY WELL

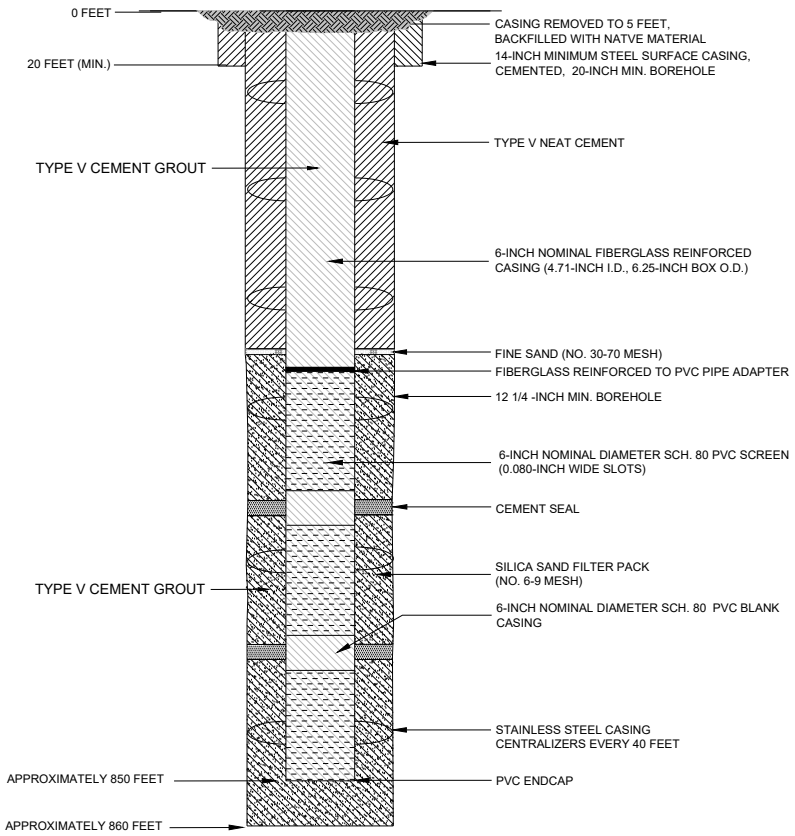

NOTES

1. WELL DESIGN DETAILS ARE BASED ON CORE HOLE AND WELL LOG RECORDS.

HALEY ALDRICH

FLORENCE COPPER, INC.
FLORENCE, ARIZONA

ABANDONMENT SCHEMATIC
RESOURCE BLOCK 89
TYPICAL INJECTION AND
RECOVERY WELL

SCALE: AS SHOWN
JULY 2019

FIGURE E-46

TABLE E-46
WELLS WITHIN RESOURCE BLOCK 89
FLORENCE COPPER PROJECT
FLORENCE, ARIZONA

Well Number	Easting	Northing	Resource Block	Depth to Top of Bedrock (ft bgs)	Depth to Top of Injection Zone (ft bgs)	Depth to Bottom of Injection Zone (ft bgs)
1296	848614	744364	89	390	430	850
1297	848684	744434	89	390	430	850
1298	848684	744505	89	390	430	850
1299	848614	744434	89	390	430	850
1305	848543	744505	89	390	430	850
1306	848614	744576	89	390	430	850
1307	848684	744576	89	390	430	850
1308	848614	744505	89	390	430	850
1309	848543	744434	89	390	430	850
1313	848543	744576	89	390	430	850
1312	848614	744646	89	390	430	850
1318	848684	744717	89	390	430	850
1314	848472	744505	89	390	430	850
1320	848684	744293	89	390	430	850
1319	848684	744646	89	390	430	850
1322	848684	744364	89	390	430	850
1323	848755	744505	89	390	430	850
1324	848755	744293	89	390	430	850
1325	848755	744364	89	390	430	850
1326	848755	744434	89	390	430	850
1327	848756	744575	89	390	430	850
1328	848755	744646	89	390	430	850
1329	848755	744788	89	390	430	850
1330	848755	744717	89	390	430	850
1362	848755	744222	89	390	430	850
1375	849109	744505	89	390	430	850
1376	849038	744434	89	390	430	850
1377	848967	744364	89	390	430	850
1378	848896	744293	89	390	430	850
1379	848826	744364	89	390	430	850
1380	848896	744434	89	390	430	850
1381	848967	744505	89	390	430	850
1382	849038	744576	89	390	430	850
1383	849038	744505	89	390	430	850
1384	848967	744434	89	390	430	850
1385	848896	744364	89	390	430	850
1386	848826	744293	89	390	430	850
1387	848826	744505	89	390	430	850
1388	848896	744576	89	390	430	850

TABLE E-46
WELLS WITHIN RESOURCE BLOCK 89
FLORENCE COPPER PROJECT
FLORENCE, ARIZONA

Well Number	Easting	Northing	Resource Block	Depth to Top of Bedrock (ft bgs)	Depth to Top of Injection Zone (ft bgs)	Depth to Bottom of Injection Zone (ft bgs)
1390	848967	744576	89	390	430	850
1391	848896	744505	89	390	430	850
1392	848826	744434	89	390	430	850
1393	848826	744646	89	390	430	850
1394	848896	744717	89	390	430	850
1396	848896	744646	89	390	430	850
1397	848826	744576	89	390	430	850
1399	848826	744717	89	390	430	850
1400	848826	744788	89	390	430	850
1421	848826	744222	89	390	430	850
1462	848967	744646	89	390	430	850

Notes:

ft bgs = feet below ground surface

OMB No. 2040-0042 Approval Expires 4/30/2022

United States Environmental Protection Agency

EPA

WELL REWORK RECORD, PLUGGING AND ABANDONMENT PLAN, OR PLUGGING AND ABANDONMENT AFFIDAVIT

Name and Address, Phone Number and/or Email of Permittee

Florence Copper Project
1575 W Hunt Hwy,
Florence, AZ 85132

Permit or EPA ID Number	API Number	Full Well Name
R9UIC-AZ3-FY11-1		Block 90 Wells - See Attached Table E-47

State	County
Arizona	Pinal

Locate well in two directions from nearest lines of quarter section and drilling unit

Surface Location

SW **1/4 of** SE **1/4 of Section** 28 **Township** 4S **Range** 9E

_____ **ft. from (N/S)** _____ **Line of quarter section**

_____ **ft. from (E/W)** _____ **Line of quarter section.**

Latitude 33.046065

Longitude -111.428845

See Attached Table for Individual Well Coordinates.

Well Class	Timing of Action (pick one)	Type of Action (pick one)
☐ Class I ☐ Class II ☑ Class III ☐ Class V	☑ Notice Prior to Work Date Expected to Commence January 2027 ☐ Report After Work Date Work Ended	☐ Well Rework ☑ Plugging and Abandonment ☐ Conversion to a Non-Injection Well

Provide a narrative description of the work planned to be performed, or that was performed. Use additional pages as necessary. See instructions.

This plugging and abandonment applies to wells Class III wells to be constructed in block 90. There are 29 Class III multi-use injection/ recovery wells, 2 dedicated Class III observation, and 5 Class III perimeter wells planned for construction in this block. The injection and recovery wells will be of uniform design, and will be used for injection and recovery on an alternate basis. Some of the injection and recovery wells will be used as perimeter and observation wells prior to well field build-out. The dedicated perimeter observation well will have a design and depth similar to the injection and recovery wells, but will not have a segmented well screen.

The work performed includes plugging and abandonment of the Class III wells in resource block 90. Plugging and abandonment will be accomplished following procedures defined in Attachment E of the application. Plugging and abandonment details are shown on the attached Figures E-47a and E-47b.

Certification

I certify under the penalty of law that I have personally examined and am familiar with the information submitted in this document and all attachments and that, based on my inquiry of those individuals immediately responsible for obtaining the information, I believe that the information is true, accurate, and complete. I am aware that there are significant penalties for submitting false information, including the possibliity of fine and imprisonment. (Ref. 40 CFR § 144.32)

Name and Official Title *(Please type or print)*	Signature	Date Signed
Dan Johnson, VP - General Manager		10/3/2019

INSTRUCTIONS FOR FORM 7520-19

This form replaces forms 7520-12 and 7520-14. Use this form only when work is planned or has occurred that affects the well's construction or operation as an injection well, including work on the casing, tubing or packer (or for shallow Class V wells, the subsurface fluid emplacement network). Use one form per injection well. While reports or other information developed by contractors or service companies may be attached, this form must be signed by a responsible entity as described at 40 CFR 144.32. Note: operators closing Class V wells should use Form 7520-17.

NAME, ADDRESS, PHONE AND/OR EMAIL OF PERMITTEE: Enter the name and street address, city/town, state, and ZIP code of the permittee. Also provide an email address (if available) and/or a phone number.

PERMIT OR EPA ID NUMBER: Enter the well identification number or permit number assigned to the well by the EPA or the permitting authority.

API NUMBER: Enter the number assigned by the local jurisdiction (usually a State Oil and Gas Agency) using the American Petroleum Institute standard numbering system.

FULL WELL NAME: Enter the full name of the well or project.

Enter the **STATE** and **COUNTY** where the well is located. For States that do not have counties, use the name of that State's equivalent jurisdiction at a more local level.

WELL LOCATION: Fill in the complete township, range, and section to the nearest quarter-quarter section. A township is north or south of the baseline, and a range is east or west of the principal meridian (e.g., T12N, R34W). Also include the distance, in feet, from the nearest north or south line and nearest east or west line of the quarter-section. Also, enter the **latitude** and **longitude** of the well in decimal degrees, to five or six places if possible; be sure to include a negative sign for the longitude of a well in the Western Hemisphere and a negative sign for the latitude of a well in the Southern Hemisphere.

Enter the **WELL CLASS,** i.e., the class of injection well as defined in 40 CFR 144.6.

TIMING OF THE ACTION: Check ***Notice prior to work*** if the activity has not yet occurred (i.e., is planned). Check ***Report after work*** if the activity described has already occurred. As appropriate, include the date the activity is expected to start or the date the activity was completed. (Note this may not be available, e.g., for a plugging plan submitted with a permit application.)

TYPE OF ACTION: Check the appropriate box to describe the kind of activity being reported. Check ***Well Rework*** for work that was/will be performed on the well after it has already been in operation as an injection well. Check ***Plugging and Abandonment*** to report on plans for or descriptions of final closure/plugging after use as an injection well. Check ***Conversion to a Non-Injection Well*** if the well is to be converted to something other than an injection well.

Provide a **NARRATIVE DESCRIPTION** of the work planned to be performed, or that was performed. The narrative should include a description of the main procedures planned or that occurred during the work activity. A service company report, daily report, or similar document may be attached if it includes all the requested information and is clear and legible.

For well reworks, include the following information: The reason for the well rework; depths of activity; type of activity; changes to injection well configuration, well casing, or cement behind casing; any plug added to the well and its depth; any newly drilled interval and its depth; method(s) to demonstrate that the well has mechanical integrity (as applicable); and any deviations from the approved rework plan (as applicable).

For a well plugging plan, include the following information: Reason for the well plugging; number of plugs placed, and their depths; materials used as plugs (e.g., cast iron bridge plug, cement, cement retainer); method to set plugs; and wait-on-cement times, if any. Also provide one or more cost estimates from an independent firm in the business of plugging and abandoning wells to plug the well as described in the plan.

For well plugging affidavit, include the following information: Reason for the well plugging; number of plugs placed, and their depths; materials used as plugs (e.g., cast iron bridge plug, cement, cement retainer); method to set plugs; wait-on-cement times, if any; and any deviations from the approved plugging plan (if applicable).

For conversion to a non-injection well, include the following information: Depths of activity; type of activity; changes to injection well configuration, well casing, or cement behind casing; any plug added to the well and its depth; any newly drilled interval and its depth; depths of new perforations; and method(s) to demonstrate that the well has mechanical integrity (as applicable).

For all of the above activities, include a well sketch depicting the work, results of well tests/logging performed, service company tickets, and any other available information demonstrating how the work was/is to be performed. Also, specify whether depths are below ground surface, relative to Kelly bushing, etc.

CERTIFICATION: This form must be signed and dated by either: a responsible corporate officer for a corporation, by a general partner for a partnership, by the proprietor of a sole proprietorship, or by a principal executive or ranking elected official for a public agency.

PAPERWORK REDUCTION ACT NOTICE: The public reporting and recordkeeping burden for this collection of information is estimated to average between 6.0 and 7.9 hours per response, depending on the injection well class. Burden means the total time, effort, or financial resource expended by persons to generate, maintain, retain, or disclose or provide information to or for a Federal Agency. This includes the time needed to review instructions; develop, acquire, install, and utilize technology and systems for the purposes of collecting, validating, and verifying information, processing and maintaining information, and disclosing and providing information; adjust the existing ways to comply with any previously applicable instructions and requirements; train personnel to be able to respond to the collection of information; search data sources; complete and review the collection of information; and, transmit or otherwise disclose the information. An agency may not conduct or sponsor, and a person is not required to respond to, a collection of information unless it displays a currently valid OMB control number. Send comments on the Agency's need for this information, the accuracy of the provided burden estimates, and any suggested methods for minimizing respondent burden, including the use of automated collection techniques to Director, Collection Strategies Division, U.S. Environmental Protection Agency (2822), 1200 Pennsylvania Ave., NW., Washington, D.C. 20460. Include the OMB control number in any correspondence. Do not send the completed forms to this address.

PROPOSED DESIGN
INJECTION AND RECOVERY WELL

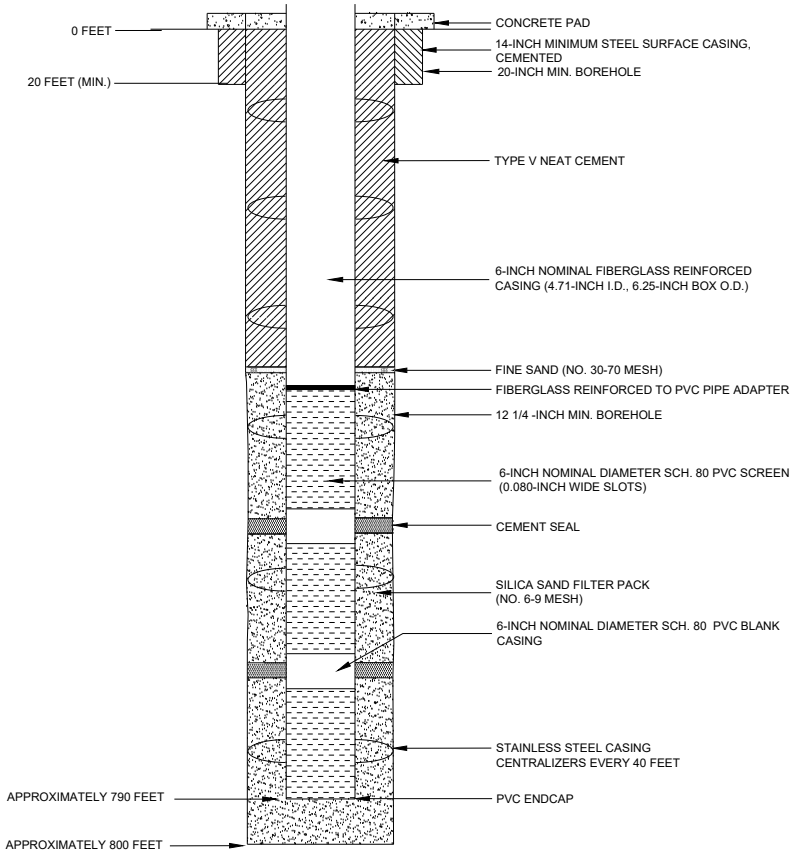

PROPOSED PLUGGING AND
ABANDONMENT
INJECTION AND RECOVERY WELL

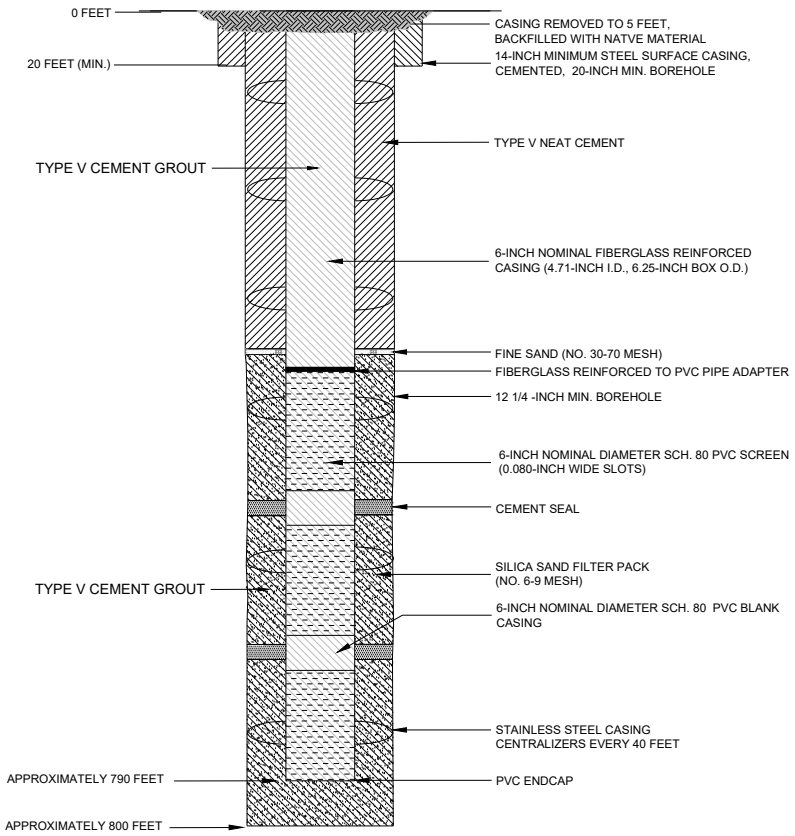

NOTES

1. WELL DESIGN DETAILS ARE BASED ON CORE HOLE AND WELL LOG RECORDS.

HALEY ALDRICH

FLORENCE COPPER, INC.
FLORENCE, ARIZONA

ABANDONMENT SCHEMATIC
RESOURCE BLOCK 90
TYPICAL INJECTION AND
RECOVERY WELL

SCALE: AS SHOWN
JULY 2019

FIGURE E-47a

Saved by: MNICHOLLS Printed: 7/25/2019 7:20 PM Sheet: HA-FIG-A-L(2)
\\HALEYALDRICH.COM\SHARE\PHX_COMMON\PROJECTS\FLORENCE COPPER\132473 FLORENCE GROUNDWATER PERMITTING\CAD\132473_000-OBSERVATION_WELL_CONSTRUCTION DIAGRAM.DWG

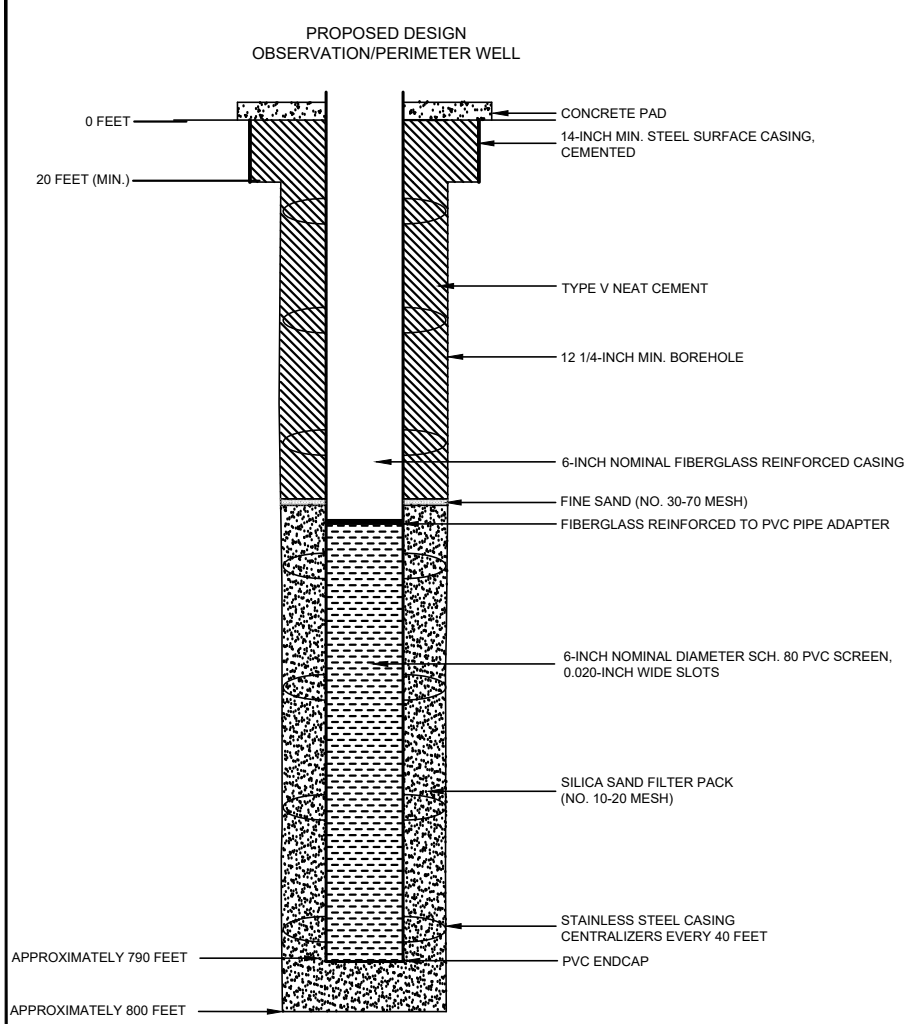

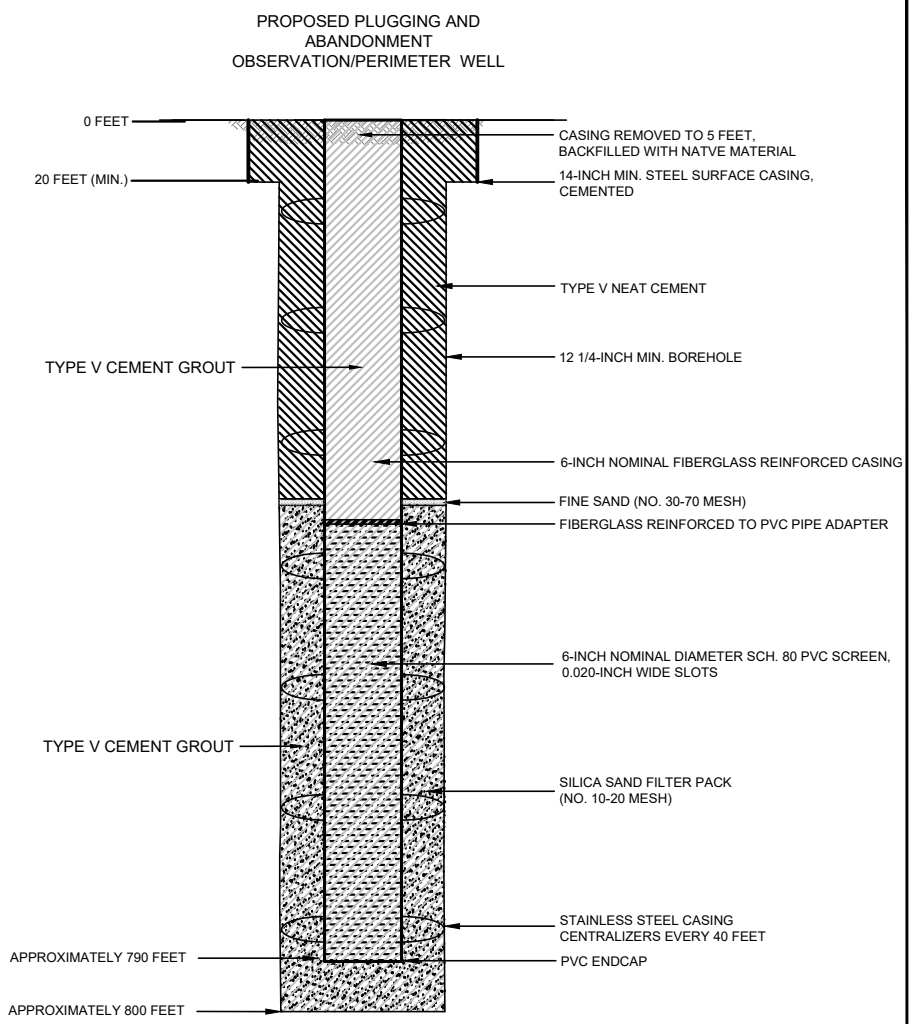

NOTES

1. WELL DESIGN DETAILS ARE BASED ON CORE HOLE AND WELL LOG RECORDS.

HALEY ALDRICH

FLORENCE COPPER, INC.
FLORENCE, ARIZONA

ABANDONMENT SCHEMATIC
RESOURCE BLOCK 90
OBSERVATION/PERIMETER WELL

JULY 2019
SCALE: AS SHOWN

FIGURE E-47b

TABLE E-47
WELLS WITHIN RESOURCE BLOCK 90
FLORENCE COPPER PROJECT
FLORENCE, ARIZONA

Well Number	Easting	Northing	Resource Block	Depth to Top of Bedrock (ft bgs)	Depth to Top of Injection Zone (ft bgs)	Depth to Bottom of Injection Zone (ft bgs)
1127	849674	744505	90	385	425	790
1128	849745	744505	90	385	425	790
1134	849533	744505	90	385	425	790
1135	849604	744576	90	385	425	790
1136	849674	744646	90	385	425	790
1138	849674	744576	90	385	425	790
1139	849604	744505	90	385	425	790
1144	849391	744505	90	385	425	790
1145	849462	744576	90	385	425	790
1146	849533	744646	90	385	425	790
1147	849604	744717	90	385	425	790
1149	849604	744646	90	385	425	790
1150	849533	744576	90	385	425	790
1151	849462	744505	90	385	425	790
1155	849533	744717	90	385	425	790
1156	849462	744646	90	385	425	790
1157	849391	744576	90	385	425	790
1158	849321	744505	90	385	425	790
1160	849250	744505	90	385	425	790
1161	849321	744576	90	385	425	790
1162	849391	744646	90	385	425	790
1163	849462	744717	90	385	425	790
1164	849533	744788	90	385	425	790
1165	849462	744788	90	385	425	790
1166	849391	744717	90	385	425	790
1167	849321	744646	90	385	425	790
1168	849250	744576	90	385	425	790
1169	849179	744505	90	385	425	790
1225	849745	744576	90	385	425	790
O23	849816	744364	90	385	425	790
O24	849533	744364	90	385	425	790
P44	849886	744434	90	385	425	790
P45	849745	744434	90	385	425	790
P46	849604	744434	90	385	425	790
P47	849462	744434	90	385	425	790
P48	849321	744434	90	385	425	790

Notes:

ft bgs = feet below ground surface

OMB No. 2040-0042 Approval Expires 4/30/2022

United States Environmental Protection Agency

WELL REWORK RECORD, PLUGGING AND ABANDONMENT PLAN, OR PLUGGING AND ABANDONMENT AFFIDAVIT

Name and Address, Phone Number and/or Email of Permittee

Florence Copper Project
1575 W Hunt Hwy,
Florence, AZ 85132

Permit or EPA ID Number	API Number	Full Well Name
R9UIC-AZ3-FY11-1		Block 96 Wells - See Attached Table E-48

State	County
Arizona	Pinal

Locate well in two directions from nearest lines of quarter section and drilling unit

Surface Location

NE 1/4 of NW 1/4 of Section 28 Township 4S Range 9E

_____ ft. from (N/S) _____ Line of quarter section

_____ ft. from (E/W) _____ Line of quarter section.

Latitude 33.045109

Longitude -111.434644

See Attached Table for Individual Well Coordinates.

Well Class	Timing of Action (pick one)	Type of Action (pick one)
☐ Class I ☐ Class II ☑ Class III ☐ Class V	☑ Notice Prior to Work Date Expected to Commence January 2027 ☐ Report After Work Date Work Ended	☐ Well Rework ☑ Plugging and Abandonment ☐ Conversion to a Non-Injection Well

Provide a narrative description of the work planned to be performed, or that was performed. Use additional pages as necessary. See instructions.

This plugging and abandonment applies to wells Class III wells to be constructed in block 96. There are 30 Class III multi-use injection/ recovery wells, 3 dedicated Class III observation, and 5 Class III perimeter wells planned for construction in this block. The injection and recovery wells will be of uniform design, and will be used for injection and recovery on an alternate basis. Some of the injection and recovery wells will be used as perimeter and observation wells prior to well field build-out. The dedicated perimeter observation well will have a design and depth similar to the injection and recovery wells, but will not have a segmented well screen.

The work performed includes plugging and abandonment of the Class III wells in resource block 96. Plugging and abandonment will be accomplished following procedures defined in Attachment E of the application. Plugging and abandonment details are shown on the attached Figures E-48a and E-48b.

Certification

I certify under the penalty of law that I have personally examined and am familiar with the information submitted in this document and all attachments and that, based on my inquiry of those individuals immediately responsible for obtaining the information, I believe that the information is true, accurate, and complete. I am aware that there are significant penalties for submitting false information, including the possibliity of fine and imprisonment. (Ref. 40 CFR § 144.32)

Name and Official Title *(Please type or print)*	Signature	Date Signed
Dan Johnson, VP - General Manager		10/3/2019

INSTRUCTIONS FOR FORM 7520-19

This form replaces forms 7520-12 and 7520-14. Use this form only when work is planned or has occurred that affects the well's construction or operation as an injection well, including work on the casing, tubing or packer (or for shallow Class V wells, the subsurface fluid emplacement network). Use one form per injection well. While reports or other information developed by contractors or service companies may be attached, this form must be signed by a responsible entity as described at 40 CFR 144.32. Note: operators closing Class V wells should use Form 7520-17.

NAME, ADDRESS, PHONE AND/OR EMAIL OF PERMITTEE: Enter the name and street address, city/town, state, and ZIP code of the permittee. Also provide an email address (if available) and/or a phone number.

PERMIT OR EPA ID NUMBER: Enter the well identification number or permit number assigned to the well by the EPA or the permitting authority.

API NUMBER: Enter the number assigned by the local jurisdiction (usually a State Oil and Gas Agency) using the American Petroleum Institute standard numbering system.

FULL WELL NAME: Enter the full name of the well or project.

Enter the **STATE** and **COUNTY** where the well is located. For States that do not have counties, use the name of that State's equivalent jurisdiction at a more local level.

WELL LOCATION: Fill in the complete township, range, and section to the nearest quarter-quarter section. A township is north or south of the baseline, and a range is east or west of the principal meridian (e.g., T12N, R34W). Also include the distance, in feet, from the nearest north or south line and nearest east or west line of the quarter-section. Also, enter the **latitude** and **longitude** of the well in decimal degrees, to five or six places if possible; be sure to include a negative sign for the longitude of a well in the Western Hemisphere and a negative sign for the latitude of a well in the Southern Hemisphere.

Enter the **WELL CLASS,** i.e., the class of injection well as defined in 40 CFR 144.6.

TIMING OF THE ACTION: Check ***Notice prior to work*** if the activity has not yet occurred (i.e., is planned). Check ***Report after work*** if the activity described has already occurred. As appropriate, include the date the activity is expected to start or the date the activity was completed. (Note this may not be available, e.g., for a plugging plan submitted with a permit application.)

TYPE OF ACTION: Check the appropriate box to describe the kind of activity being reported. Check ***Well Rework*** for work that was/will be performed on the well after it has already been in operation as an injection well. Check ***Plugging and Abandonment*** to report on plans for or descriptions of final closure/plugging after use as an injection well. Check ***Conversion to a Non-Injection Well*** if the well is to be converted to something other than an injection well.

Provide a **NARRATIVE DESCRIPTION** of the work planned to be performed, or that was performed. The narrative should include a description of the main procedures planned or that occurred during the work activity. A service company report, daily report, or similar document may be attached if it includes all the requested information and is clear and legible.

For well reworks, include the following information: The reason for the well rework; depths of activity; type of activity; changes to injection well configuration, well casing, or cement behind casing; any plug added to the well and its depth; any newly drilled interval and its depth; method(s) to demonstrate that the well has mechanical integrity (as applicable); and any deviations from the approved rework plan (as applicable).

For a well plugging plan, include the following information: Reason for the well plugging; number of plugs placed, and their depths; materials used as plugs (e.g., cast iron bridge plug, cement, cement retainer); method to set plugs; and wait-on-cement times, if any. Also provide one or more cost estimates from an independent firm in the business of plugging and abandoning wells to plug the well as described in the plan.

For well plugging affidavit, include the following information: Reason for the well plugging; number of plugs placed, and their depths; materials used as plugs (e.g., cast iron bridge plug, cement, cement retainer); method to set plugs; wait-on-cement times, if any; and any deviations from the approved plugging plan (if applicable).

For conversion to a non-injection well, include the following information: Depths of activity; type of activity; changes to injection well configuration, well casing, or cement behind casing; any plug added to the well and its depth; any newly drilled interval and its depth; depths of new perforations; and method(s) to demonstrate that the well has mechanical integrity (as applicable).

For all of the above activities, include a well sketch depicting the work, results of well tests/logging performed, service company tickets, and any other available information demonstrating how the work was/is to be performed. Also, specify whether depths are below ground surface, relative to Kelly bushing, etc.

CERTIFICATION: This form must be signed and dated by either: a responsible corporate officer for a corporation, by a general partner for a partnership, by the proprietor of a sole proprietorship, or by a principal executive or ranking elected official for a public agency.

PAPERWORK REDUCTION ACT NOTICE: The public reporting and recordkeeping burden for this collection of information is estimated to average between 6.0 and 7.9 hours per response, depending on the injection well class. Burden means the total time, effort, or financial resource expended by persons to generate, maintain, retain, or disclose or provide information to or for a Federal Agency. This includes the time needed to review instructions; develop, acquire, install, and utilize technology and systems for the purposes of collecting, validating, and verifying information, processing and maintaining information, and disclosing and providing information; adjust the existing ways to comply with any previously applicable instructions and requirements; train personnel to be able to respond to the collection of information; search data sources; complete and review the collection of information; and, transmit or otherwise disclose the information. An agency may not conduct or sponsor, and a person is not required to respond to, a collection of information unless it displays a currently valid OMB control number. Send comments on the Agency's need for this information, the accuracy of the provided burden estimates, and any suggested methods for minimizing respondent burden, including the use of automated collection techniques to Director, Collection Strategies Division, U.S. Environmental Protection Agency (2822), 1200 Pennsylvania Ave., NW., Washington, D.C. 20460. Include the OMB control number in any correspondence. Do not send the completed forms to this address.

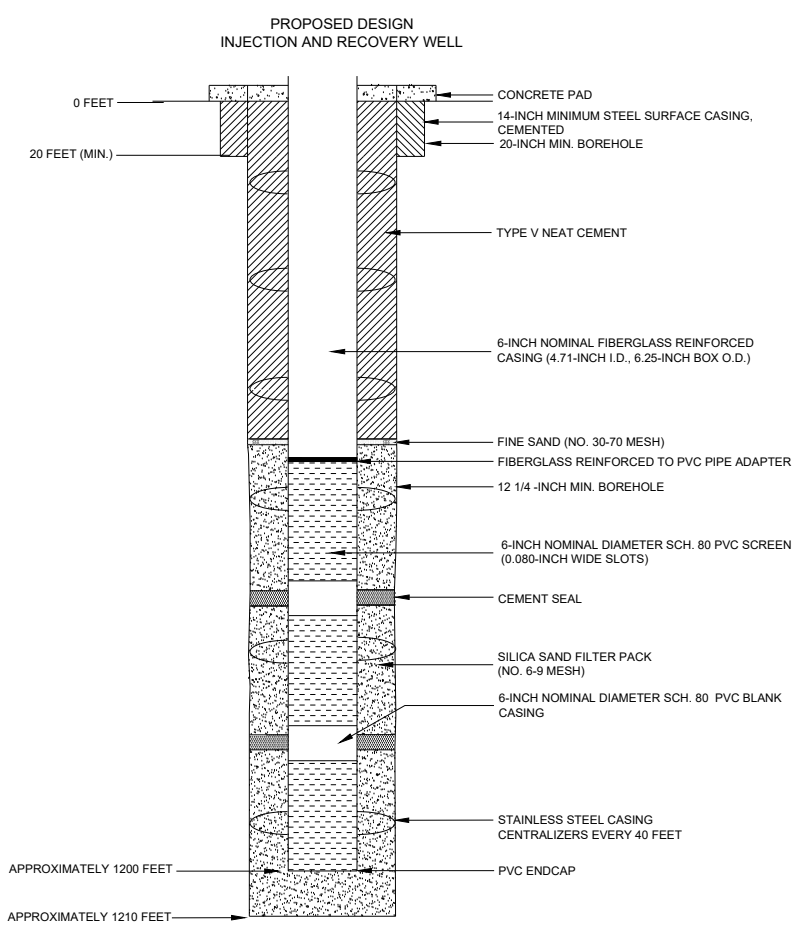

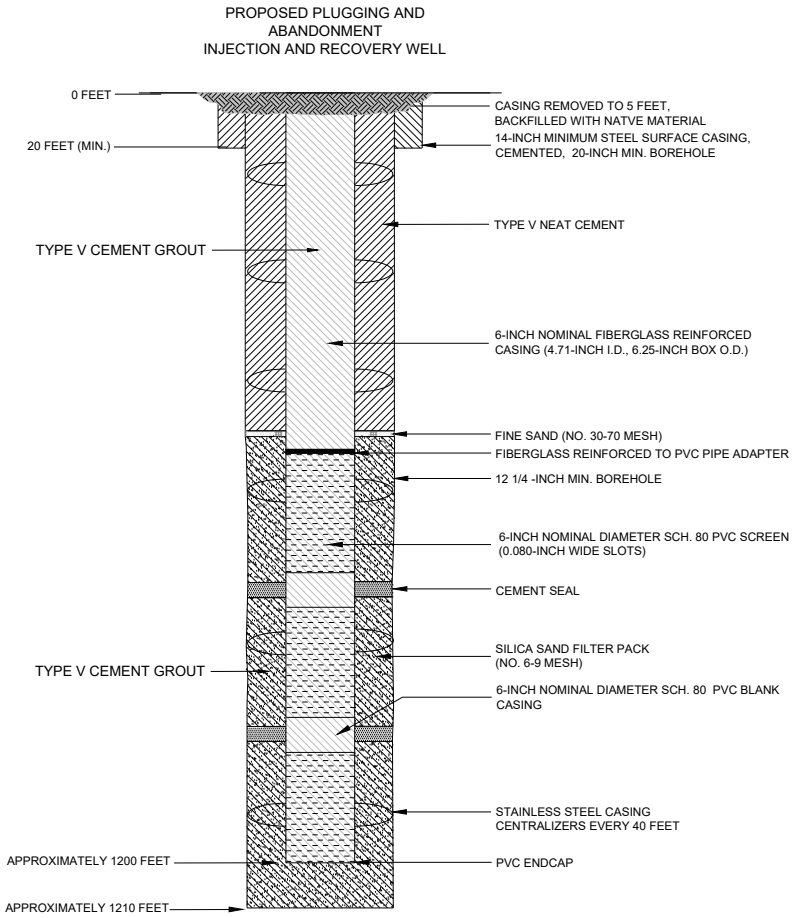

NOTES

1. WELL DESIGN DETAILS ARE BASED ON CORE HOLE AND WELL LOG RECORDS.

HALEY ALDRICH

FLORENCE COPPER, INC.
FLORENCE, ARIZONA

ABANDONMENT SCHEMATIC
RESOURCE BLOCK 96
TYPICAL INJECTION AND RECOVERY WELL

SCALE: AS SHOWN
JULY 2019

FIGURE E-48a

Saved by: MNICHOLLS Printed: 7/25/2019 7:20 PM Sheet: HA-FIG-A-L(2)
\\HALEYALDRICH.COM\SHARE\PHX_COMMON\PROJECTS\FLORENCE COPPER\132473 FLORENCE GROUNDWATER PERMITTING\CAD\132473_000-OBSERVATION_WELL_CONSTRUCTION DIAGRAM.DWG

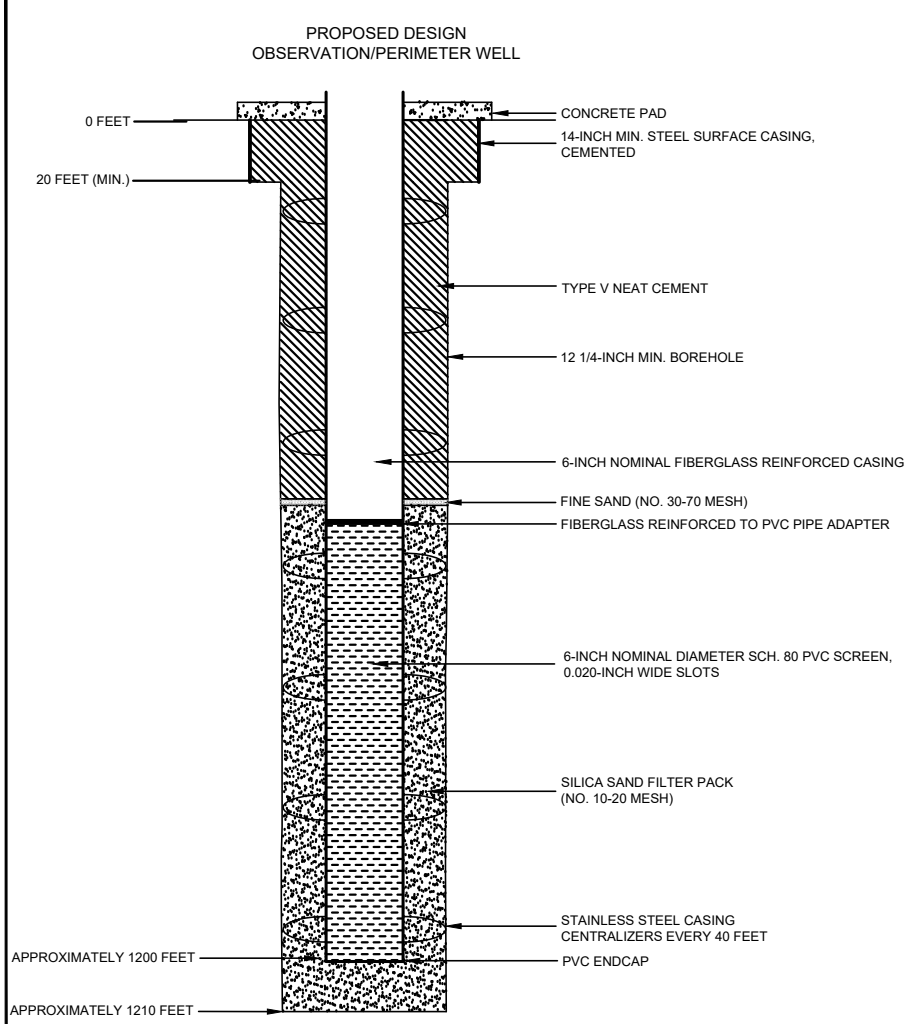

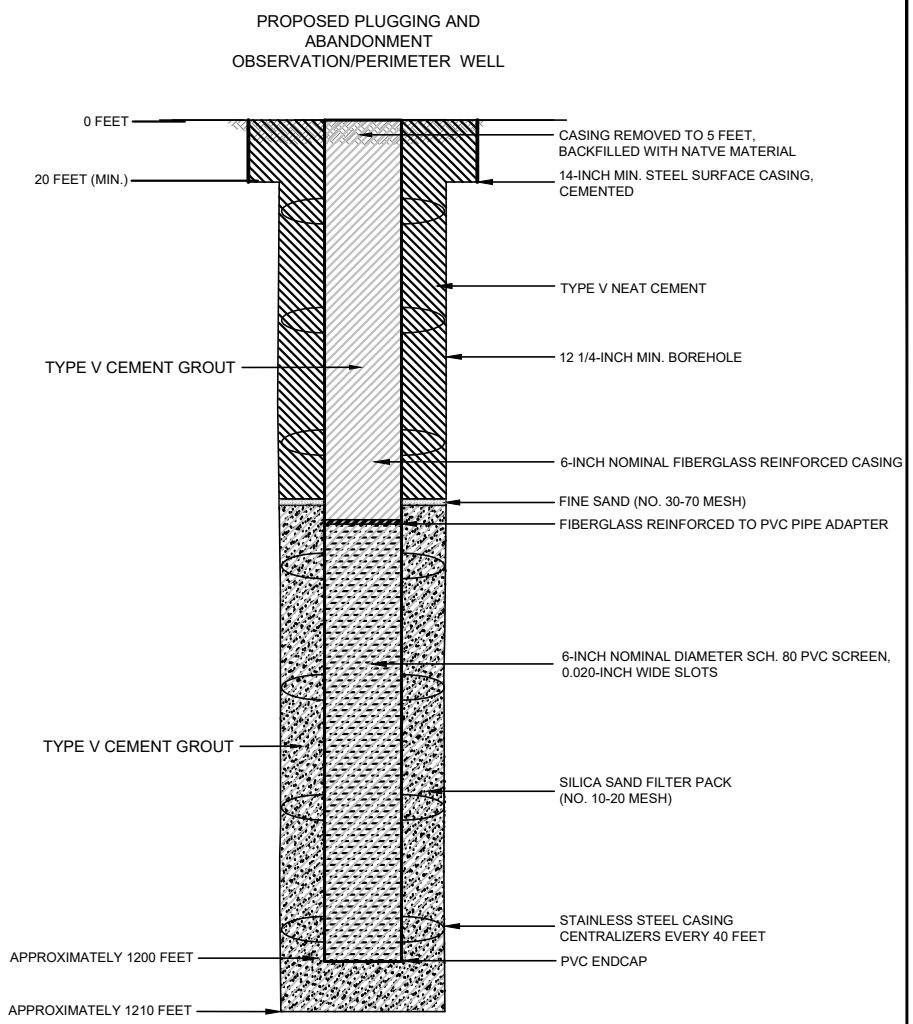

NOTES

1. WELL DESIGN DETAILS ARE BASED ON CORE HOLE AND WELL LOG RECORDS.

HALEY ALDRICH

FLORENCE COPPER, INC.
FLORENCE, ARIZONA

ABANDONMENT SCHEMATIC
RESOURCE BLOCK 96
OBSERVATION/PERIMETER WELL

JULY 2019
SCALE: AS SHOWN

FIGURE E-48b

TABLE E-48
WELLS WITHIN RESOURCE BLOCK 96
FLORENCE COPPER PROJECT
FLORENCE, ARIZONA

Well Number	Easting	Northing	Resource Block	Depth to Top of Bedrock (ft bgs)	Depth to Top of Injection Zone (ft bgs)	Depth to Bottom of Injection Zone (ft bgs)
1287	847977	744151	96	740	780	1200
1290	848048	744151	96	740	780	1200
1831	847553	744293	96	740	780	1200
1832	847624	744293	96	740	780	1200
1833	847624	744364	96	740	780	1200
1842	847411	744152	96	740	780	1200
1844	847553	744222	96	740	780	1200
1845	847482	744222	96	740	780	1200
1846	847553	744152	96	740	780	1200
1847	847482	744152	96	740	780	1200
1853	847624	744222	96	740	780	1200
1854	847624	744152	96	740	780	1200
1855	847836	744293	96	740	780	1200
1857	847836	744364	96	740	780	1200
1858	847765	744293	96	740	780	1200
1859	847694	744364	96	740	780	1200
1860	847765	744434	96	740	780	1200
1862	847765	744364	96	740	780	1200
1863	847694	744293	96	740	780	1200
1865	847694	744434	96	740	780	1200
1867	847906	744293	96	740	780	1200
1872	847765	744152	96	740	780	1200
1873	847836	744152	96	740	780	1200
1876	847765	744222	96	740	780	1200
1877	847694	744152	96	740	780	1200
1878	847694	744222	96	740	780	1200
1879	847977	744222	96	740	780	1200
1880	847906	744222	96	740	780	1200
1881	847836	744222	96	740	780	1200
1882	847906	744152	96	740	780	1200
O30	848119	744010	96	740	780	1200
O31	847836	744010	96	740	780	1200
O32	847553	744010	96	740	780	1200
P59	848048	744081	96	740	780	1200
P60	847906	744081	96	740	780	1200
P61	847765	744081	96	740	780	1200
P62	847624	744081	96	740	780	1200
P63	847482	744081	96	740	780	1200

Notes:

ft bgs = feet below ground surface

OMB No. 2040-0042 Approval Expires 4/30/2022

United States Environmental Protection Agency

WELL REWORK RECORD, PLUGGING AND ABANDONMENT PLAN, OR PLUGGING AND ABANDONMENT AFFIDAVIT

Name and Address, Phone Number and/or Email of Permittee

Florence Copper Project
1575 W Hunt Hwy,
Florence, AZ 85132

Permit or EPA ID Number	API Number	Full Well Name
R9UIC-AZ3-FY11-1		Block 97 Wells - See Attached Table E-49

State	County
Arizona	Pinal

Locate well in two directions from nearest lines of quarter section and drilling unit

Surface Location

NE 1/4 of NW 1/4 of Section 28 Township 4S Range 9E

_____ ft. from (N/S) _____ Line of quarter section

_____ ft. from (E/W) _____ Line of quarter section.

Latitude 33.045064

Longitude -111.432321

See Attached Table for Individual Well Coordinates.

Well Class	Timing of Action (pick one)	Type of Action (pick one)
☐ Class I ☐ Class II ☑ Class III ☐ Class V	☑ Notice Prior to Work Date Expected to Commence January 2027 ☐ Report After Work Date Work Ended	☐ Well Rework ☑ Plugging and Abandonment ☐ Conversion to a Non-Injection Well

Provide a narrative description of the work planned to be performed, or that was performed. Use additional pages as necessary. See instructions.

This plugging and abandonment applies to wells Class III wells to be constructed in block 97. There are 30 Class III multi-use injection/ recovery wells, 2 dedicated Class III observation, and 5 Class III perimeter wells planned for construction in this block. The injection and recovery wells will be of uniform design, and will be used for injection and recovery on an alternate basis. Some of the injection and recovery wells will be used as perimeter and observation wells prior to well field build-out. The dedicated perimeter observation well will have a design and depth similar to the injection and recovery wells, but will not have a segmented well screen.

The work performed includes plugging and abandonment of the Class III wells in resource block 97. Plugging and abandonment will be accomplished following procedures defined in Attachment E of the application. Plugging and abandonment details are shown on the attached Figures E-49a and E-49b.

Certification

I certify under the penalty of law that I have personally examined and am familiar with the information submitted in this document and all attachments and that, based on my inquiry of those individuals immediately responsible for obtaining the information, I believe that the information is true, accurate, and complete. I am aware that there are significant penalties for submitting false information, including the possibliity of fine and imprisonment. (Ref. 40 CFR § 144.32)

Name and Official Title *(Please type or print)*	Signature	Date Signed
Dan Johnson, VP - General Manager		10/3/2019

INSTRUCTIONS FOR FORM 7520-19

This form replaces forms 7520-12 and 7520-14. Use this form only when work is planned or has occurred that affects the well's construction or operation as an injection well, including work on the casing, tubing or packer (or for shallow Class V wells, the subsurface fluid emplacement network). Use one form per injection well. While reports or other information developed by contractors or service companies may be attached, this form must be signed by a responsible entity as described at 40 CFR 144.32. Note: operators closing Class V wells should use Form 7520-17.

NAME, ADDRESS, PHONE AND/OR EMAIL OF PERMITTEE: Enter the name and street address, city/town, state, and ZIP code of the permittee. Also provide an email address (if available) and/or a phone number.

PERMIT OR EPA ID NUMBER: Enter the well identification number or permit number assigned to the well by the EPA or the permitting authority.

API NUMBER: Enter the number assigned by the local jurisdiction (usually a State Oil and Gas Agency) using the American Petroleum Institute standard numbering system.

FULL WELL NAME: Enter the full name of the well or project.

Enter the **STATE** and **COUNTY** where the well is located. For States that do not have counties, use the name of that State's equivalent jurisdiction at a more local level.

WELL LOCATION: Fill in the complete township, range, and section to the nearest quarter-quarter section. A township is north or south of the baseline, and a range is east or west of the principal meridian (e.g., T12N, R34W). Also include the distance, in feet, from the nearest north or south line and nearest east or west line of the quarter-section. Also, enter the **latitude** and **longitude** of the well in decimal degrees, to five or six places if possible; be sure to include a negative sign for the longitude of a well in the Western Hemisphere and a negative sign for the latitude of a well in the Southern Hemisphere.

Enter the **WELL CLASS,** i.e., the class of injection well as defined in 40 CFR 144.6.

TIMING OF THE ACTION: Check ***Notice prior to work*** if the activity has not yet occurred (i.e., is planned). Check ***Report after work*** if the activity described has already occurred. As appropriate, include the date the activity is expected to start or the date the activity was completed. (Note this may not be available, e.g., for a plugging plan submitted with a permit application.)

TYPE OF ACTION: Check the appropriate box to describe the kind of activity being reported. Check ***Well Rework*** for work that was/will be performed on the well after it has already been in operation as an injection well. Check ***Plugging and Abandonment*** to report on plans for or descriptions of final closure/plugging after use as an injection well. Check ***Conversion to a Non-Injection Well*** if the well is to be converted to something other than an injection well.

Provide a **NARRATIVE DESCRIPTION** of the work planned to be performed, or that was performed. The narrative should include a description of the main procedures planned or that occurred during the work activity. A service company report, daily report, or similar document may be attached if it includes all the requested information and is clear and legible.

For well reworks, include the following information: The reason for the well rework; depths of activity; type of activity; changes to injection well configuration, well casing, or cement behind casing; any plug added to the well and its depth; any newly drilled interval and its depth; method(s) to demonstrate that the well has mechanical integrity (as applicable); and any deviations from the approved rework plan (as applicable).

For a well plugging plan, include the following information: Reason for the well plugging; number of plugs placed, and their depths; materials used as plugs (e.g., cast iron bridge plug, cement, cement retainer); method to set plugs; and wait-on-cement times, if any. Also provide one or more cost estimates from an independent firm in the business of plugging and abandoning wells to plug the well as described in the plan.

For well plugging affidavit, include the following information: Reason for the well plugging; number of plugs placed, and their depths; materials used as plugs (e.g., cast iron bridge plug, cement, cement retainer); method to set plugs; wait-on-cement times, if any; and any deviations from the approved plugging plan (if applicable).

For conversion to a non-injection well, include the following information: Depths of activity; type of activity; changes to injection well configuration, well casing, or cement behind casing; any plug added to the well and its depth; any newly drilled interval and its depth; depths of new perforations; and method(s) to demonstrate that the well has mechanical integrity (as applicable).

For all of the above activities, include a well sketch depicting the work, results of well tests/logging performed, service company tickets, and any other available information demonstrating how the work was/is to be performed. Also, specify whether depths are below ground surface, relative to Kelly bushing, etc.

CERTIFICATION: This form must be signed and dated by either: a responsible corporate officer for a corporation, by a general partner for a partnership, by the proprietor of a sole proprietorship, or by a principal executive or ranking elected official for a public agency.

PAPERWORK REDUCTION ACT NOTICE: The public reporting and recordkeeping burden for this collection of information is estimated to average between 6.0 and 7.9 hours per response, depending on the injection well class. Burden means the total time, effort, or financial resource expended by persons to generate, maintain, retain, or disclose or provide information to or for a Federal Agency. This includes the time needed to review instructions; develop, acquire, install, and utilize technology and systems for the purposes of collecting, validating, and verifying information, processing and maintaining information, and disclosing and providing information; adjust the existing ways to comply with any previously applicable instructions and requirements; train personnel to be able to respond to the collection of information; search data sources; complete and review the collection of information; and, transmit or otherwise disclose the information. An agency may not conduct or sponsor, and a person is not required to respond to, a collection of information unless it displays a currently valid OMB control number. Send comments on the Agency's need for this information, the accuracy of the provided burden estimates, and any suggested methods for minimizing respondent burden, including the use of automated collection techniques to Director, Collection Strategies Division, U.S. Environmental Protection Agency (2822), 1200 Pennsylvania Ave., NW., Washington, D.C. 20460. Include the OMB control number in any correspondence. Do not send the completed forms to this address.

PROPOSED DESIGN
INJECTION AND RECOVERY WELL

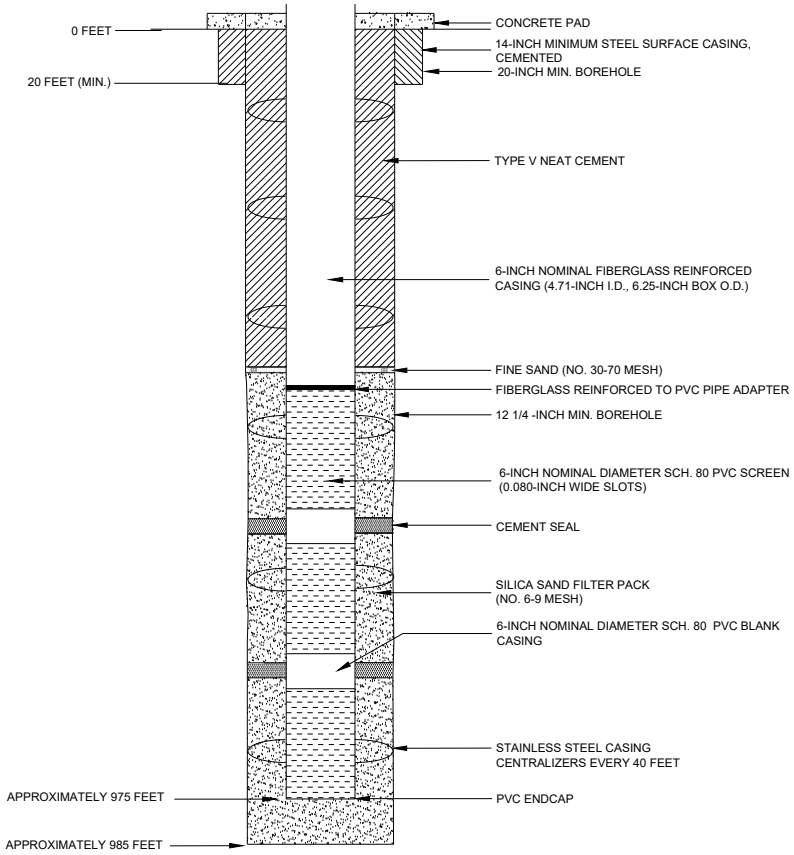

PROPOSED PLUGGING AND
ABANDONMENT
INJECTION AND RECOVERY WELL

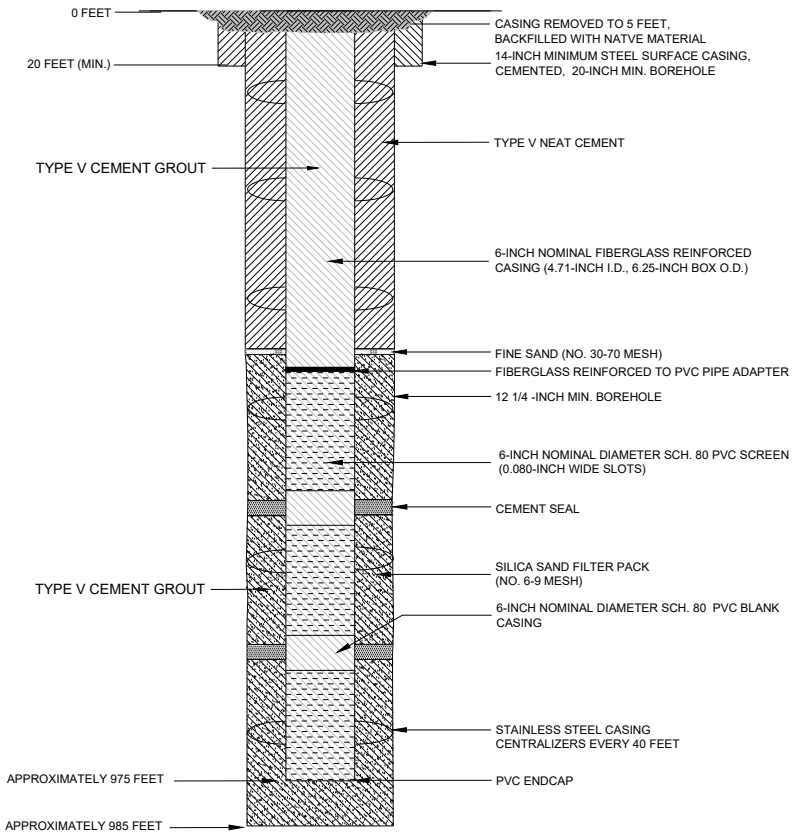

NOTES

1. WELL DESIGN DETAILS ARE BASED ON CORE HOLE AND WELL LOG RECORDS.

HALEY ALDRICH

FLORENCE COPPER, INC.
FLORENCE, ARIZONA

ABANDONMENT SCHEMATIC
RESOURCE BLOCK 97
TYPICAL INJECTION AND
RECOVERY WELL

SCALE: AS SHOWN
JULY 2019

FIGURE E-49a

Saved by: MNICHOLLS Printed: 7/25/2019 7:20 PM Sheet: HA-FIG-A-L(2)
\\HALEYALDRICH.COM\SHARE\PHX_COMMON\PROJECTS\FLORENCE COPPER\132473 FLORENCE GROUNDWATER PERMITTING\CAD\132473_000-OBSERVATION_WELL_CONSTRUCTION DIAGRAM.DWG

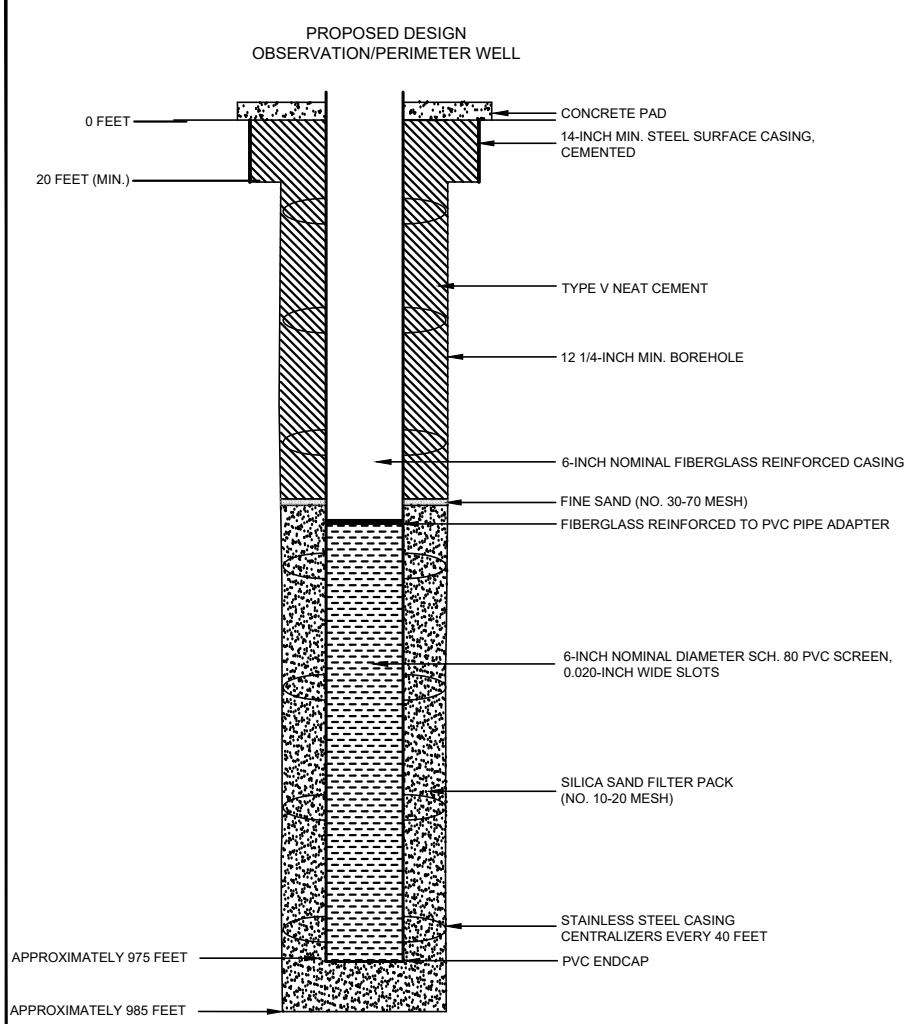

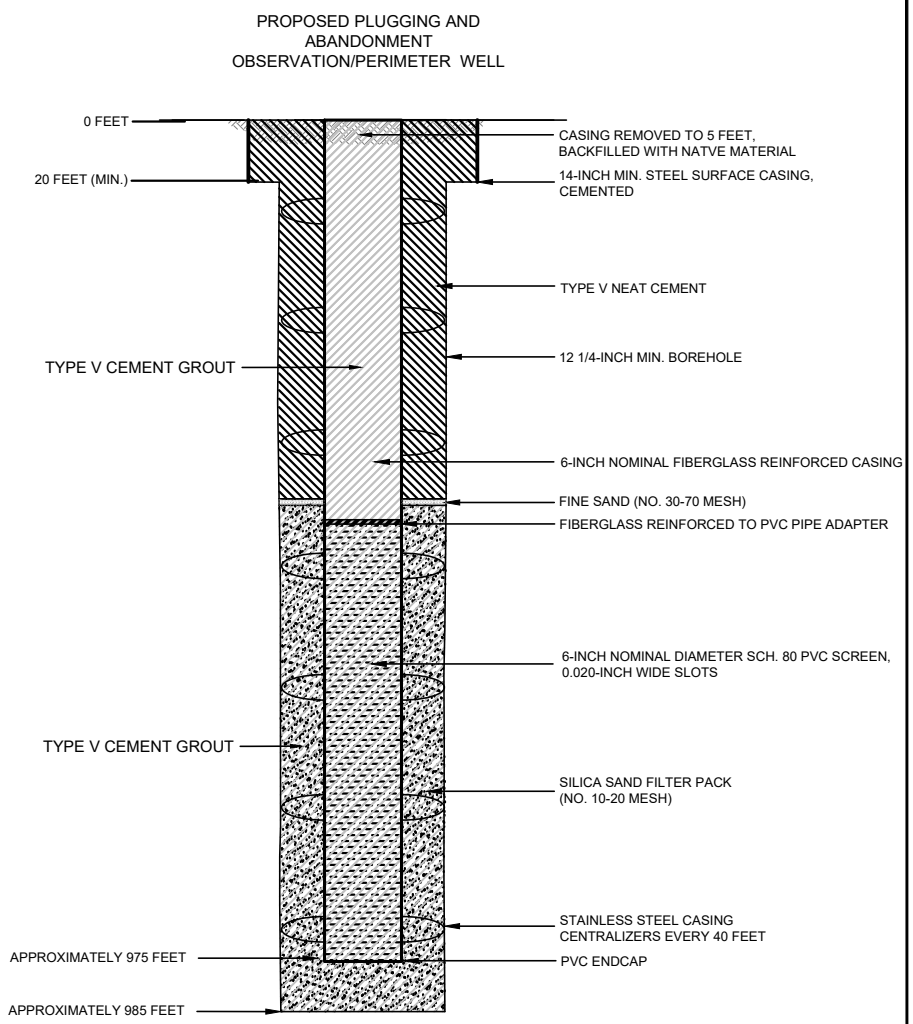

NOTES

1. WELL DESIGN DETAILS ARE BASED ON CORE HOLE AND WELL LOG RECORDS.

HALEY ALDRICH

FLORENCE COPPER, INC.
FLORENCE, ARIZONA

ABANDONMENT SCHEMATIC
RESOURCE BLOCK 97
OBSERVATION/PERIMETER WELL

JULY 2019
SCALE: AS SHOWN

FIGURE E-49b

TABLE E-49
WELLS WITHIN RESOURCE BLOCK 97
FLORENCE COPPER PROJECT
FLORENCE, ARIZONA

Well Number	Easting	Northing	Resource Block	Depth to Top of Bedrock (ft bgs)	Depth to Top of Injection Zone (ft bgs)	Depth to Bottom of Injection Zone (ft bgs)
1295	848543	744293	97	475	485	975
1300	848543	744364	97	475	485	975
1301	848472	744293	97	475	485	975
1302	848331	744293	97	475	485	975
1303	848402	744364	97	475	485	975
1304	848472	744434	97	475	485	975
1310	848472	744364	97	475	485	975
1311	848402	744293	97	475	485	975
1315	848402	744434	97	475	485	975
1316	848331	744364	97	475	485	975
1317	848260	744293	97	475	485	975
1321	848614	744293	97	475	485	975
1342	848543	744152	97	475	485	975
1343	848472	744222	97	475	485	975
1344	848401	744152	97	475	485	975
1345	848401	744222	97	475	485	975
1346	848331	744222	97	475	485	975
1347	848260	744151	97	475	485	975
1354	848260	744222	97	475	485	975
1355	848189	744222	97	475	485	975
1356	848189	744151	97	475	485	975
1357	848119	744151	97	475	485	975
1358	848684	744222	97	475	485	975
1359	848614	744222	97	475	485	975
1360	848543	744222	97	475	485	975
1361	848684	744152	97	475	485	975
1432	848331	744151	97	475	485	975
1433	848614	744152	97	475	485	975
1434	848472	744152	97	475	485	975
1435	848755	744151	97	475	485	975
O28	848684	744010	97	475	485	975
O29	848401	744010	97	475	485	975
P54	848755	744081	97	475	485	975
P55	848614	744081	97	475	485	975
P56	848472	744081	97	475	485	975
P57	848331	744081	97	475	485	975
P58	848189	744081	97	475	485	975

Notes:

ft bgs = feet below ground surface

OMB No. 2040-0042 Approval Expires 4/30/2022

United States Environmental Protection Agency

WELL REWORK RECORD, PLUGGING AND ABANDONMENT PLAN, OR PLUGGING AND ABANDONMENT AFFIDAVIT

Name and Address, Phone Number and/or Email of Permittee

Florence Copper Project
1575 W Hunt Hwy,
Florence, AZ 85132

Permit or EPA ID Number	API Number	Full Well Name
R9UIC-AZ3-FY11-1		Block 98 Wells - See Attached Table E-50

State	County
Arizona	Pinal

Locate well in two directions from nearest lines of quarter section and drilling unit

Surface Location

NW 1/4 of NE 1/4 of Section 28 Township 4S Range 9E

_____ ft. from (N/S) _____ Line of quarter section

_____ ft. from (E/W) _____ Line of quarter section.

Latitude 33.045068

Longitude -111.430281

See Attached Table for Individual Well Coordinates.

Well Class	Timing of Action (pick one)	Type of Action (pick one)
☐ Class I ☐ Class II ☑ Class III ☐ Class V	☑ Notice Prior to Work Date Expected to Commence January 2027 ☐ Report After Work Date Work Ended	☐ Well Rework ☑ Plugging and Abandonment ☐ Conversion to a Non-Injection Well

Provide a narrative description of the work planned to be performed, or that was performed. Use additional pages as necessary. See instructions.

This plugging and abandonment applies to wells Class III wells to be constructed in block 98. There are 15 Class III multi-use injection/ recovery wells, 2 dedicated Class III observation, and 5 Class III perimeter wells planned for construction in this block. The injection and recovery wells will be of uniform design, and will be used for injection and recovery on an alternate basis. Some of the injection and recovery wells will be used as perimeter and observation wells prior to well field build-out. The dedicated perimeter observation well will have a design and depth similar to the injection and recovery wells, but will not have a segmented well screen.

The work performed includes plugging and abandonment of the Class III wells in resource block 98. Plugging and abandonment will be accomplished following procedures defined in Attachment E of the application. Plugging and abandonment details are shown on the attached Figures E-50a and E-50b.

Certification

I certify under the penalty of law that I have personally examined and am familiar with the information submitted in this document and all attachments and that, based on my inquiry of those individuals immediately responsible for obtaining the information, I believe that the information is true, accurate, and complete. I am aware that there are significant penalties for submitting false information, including the possibliity of fine and imprisonment. (Ref. 40 CFR § 144.32)

Name and Official Title *(Please type or print)*	Signature	Date Signed
Dan Johnson, VP - General Manager		10/3/2019

INSTRUCTIONS FOR FORM 7520-19

This form replaces forms 7520-12 and 7520-14. Use this form only when work is planned or has occurred that affects the well's construction or operation as an injection well, including work on the casing, tubing or packer (or for shallow Class V wells, the subsurface fluid emplacement network). Use one form per injection well. While reports or other information developed by contractors or service companies may be attached, this form must be signed by a responsible entity as described at 40 CFR 144.32. Note: operators closing Class V wells should use Form 7520-17.

NAME, ADDRESS, PHONE AND/OR EMAIL OF PERMITTEE: Enter the name and street address, city/town, state, and ZIP code of the permittee. Also provide an email address (if available) and/or a phone number.

PERMIT OR EPA ID NUMBER: Enter the well identification number or permit number assigned to the well by the EPA or the permitting authority.

API NUMBER: Enter the number assigned by the local jurisdiction (usually a State Oil and Gas Agency) using the American Petroleum Institute standard numbering system.

FULL WELL NAME: Enter the full name of the well or project.

Enter the **STATE** and **COUNTY** where the well is located. For States that do not have counties, use the name of that State's equivalent jurisdiction at a more local level.

WELL LOCATION: Fill in the complete township, range, and section to the nearest quarter-quarter section. A township is north or south of the baseline, and a range is east or west of the principal meridian (e.g., T12N, R34W). Also include the distance, in feet, from the nearest north or south line and nearest east or west line of the quarter-section. Also, enter the **latitude** and **longitude** of the well in decimal degrees, to five or six places if possible; be sure to include a negative sign for the longitude of a well in the Western Hemisphere and a negative sign for the latitude of a well in the Southern Hemisphere.

Enter the **WELL CLASS,** i.e., the class of injection well as defined in 40 CFR 144.6.

TIMING OF THE ACTION: Check ***Notice prior to work*** if the activity has not yet occurred (i.e., is planned). Check ***Report after work*** if the activity described has already occurred. As appropriate, include the date the activity is expected to start or the date the activity was completed. (Note this may not be available, e.g., for a plugging plan submitted with a permit application.)

TYPE OF ACTION: Check the appropriate box to describe the kind of activity being reported. Check ***Well Rework*** for work that was/will be performed on the well after it has already been in operation as an injection well. Check ***Plugging and Abandonment*** to report on plans for or descriptions of final closure/plugging after use as an injection well. Check ***Conversion to a Non-Injection Well*** if the well is to be converted to something other than an injection well.

Provide a **NARRATIVE DESCRIPTION** of the work planned to be performed, or that was performed. The narrative should include a description of the main procedures planned or that occurred during the work activity. A service company report, daily report, or similar document may be attached if it includes all the requested information and is clear and legible.

For well reworks, include the following information: The reason for the well rework; depths of activity; type of activity; changes to injection well configuration, well casing, or cement behind casing; any plug added to the well and its depth; any newly drilled interval and its depth; method(s) to demonstrate that the well has mechanical integrity (as applicable); and any deviations from the approved rework plan (as applicable).

For a well plugging plan, include the following information: Reason for the well plugging; number of plugs placed, and their depths; materials used as plugs (e.g., cast iron bridge plug, cement, cement retainer); method to set plugs; and wait-on-cement times, if any. Also provide one or more cost estimates from an independent firm in the business of plugging and abandoning wells to plug the well as described in the plan.

For well plugging affidavit, include the following information: Reason for the well plugging; number of plugs placed, and their depths; materials used as plugs (e.g., cast iron bridge plug, cement, cement retainer); method to set plugs; wait-on-cement times, if any; and any deviations from the approved plugging plan (if applicable).

For conversion to a non-injection well, include the following information: Depths of activity; type of activity; changes to injection well configuration, well casing, or cement behind casing; any plug added to the well and its depth; any newly drilled interval and its depth; depths of new perforations; and method(s) to demonstrate that the well has mechanical integrity (as applicable).

For all of the above activities, include a well sketch depicting the work, results of well tests/logging performed, service company tickets, and any other available information demonstrating how the work was/is to be performed. Also, specify whether depths are below ground surface, relative to Kelly bushing, etc.

CERTIFICATION: This form must be signed and dated by either: a responsible corporate officer for a corporation, by a general partner for a partnership, by the proprietor of a sole proprietorship, or by a principal executive or ranking elected official for a public agency.

PAPERWORK REDUCTION ACT NOTICE: The public reporting and recordkeeping burden for this collection of information is estimated to average between 6.0 and 7.9 hours per response, depending on the injection well class. Burden means the total time, effort, or financial resource expended by persons to generate, maintain, retain, or disclose or provide information to or for a Federal Agency. This includes the time needed to review instructions; develop, acquire, install, and utilize technology and systems for the purposes of collecting, validating, and verifying information, processing and maintaining information, and disclosing and providing information; adjust the existing ways to comply with any previously applicable instructions and requirements; train personnel to be able to respond to the collection of information; search data sources; complete and review the collection of information; and, transmit or otherwise disclose the information. An agency may not conduct or sponsor, and a person is not required to respond to, a collection of information unless it displays a currently valid OMB control number. Send comments on the Agency's need for this information, the accuracy of the provided burden estimates, and any suggested methods for minimizing respondent burden, including the use of automated collection techniques to Director, Collection Strategies Division, U.S. Environmental Protection Agency (2822), 1200 Pennsylvania Ave., NW., Washington, D.C. 20460. Include the OMB control number in any correspondence. Do not send the completed forms to this address.

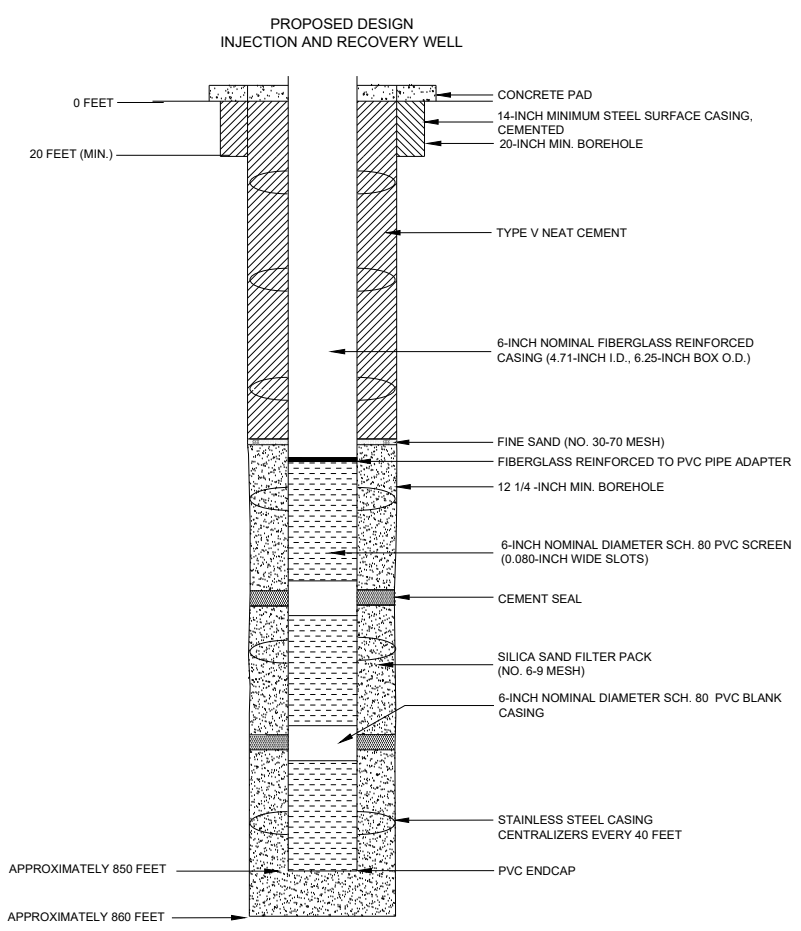

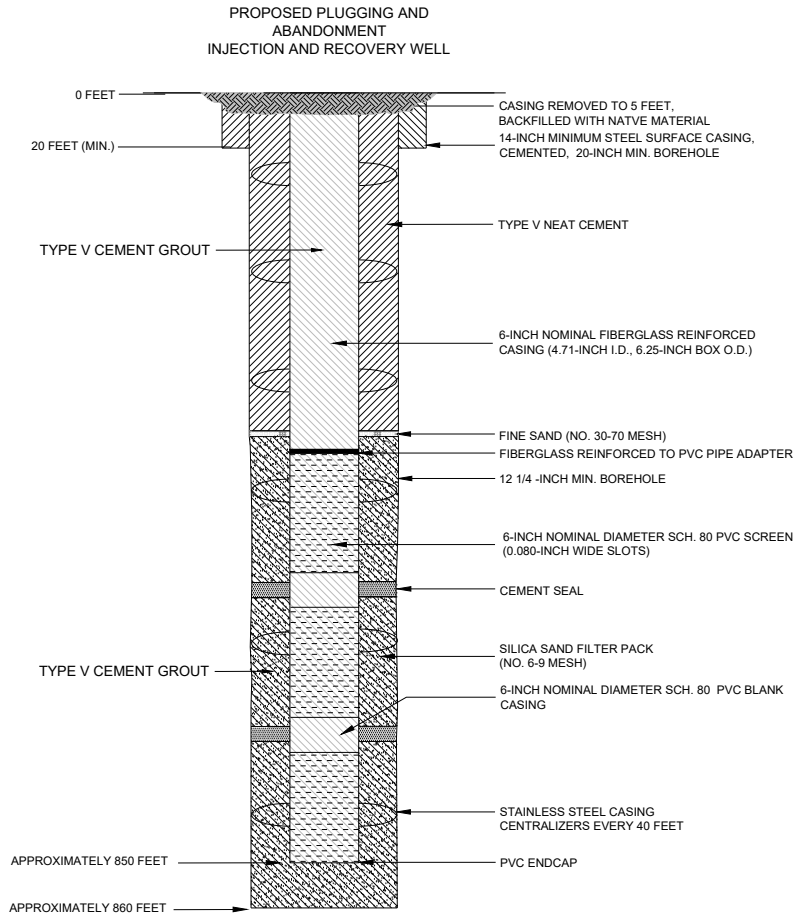

NOTES

1. WELL DESIGN DETAILS ARE BASED ON CORE HOLE AND WELL LOG RECORDS.

HALEY ALDRICH

FLORENCE COPPER, INC.
FLORENCE, ARIZONA

ABANDONMENT SCHEMATIC
RESOURCE BLOCK 98
TYPICAL INJECTION AND RECOVERY WELL

SCALE: AS SHOWN
JULY 2019

FIGURE E-50a

PROPOSED DESIGN
OBSERVATION/PERIMETER WELL

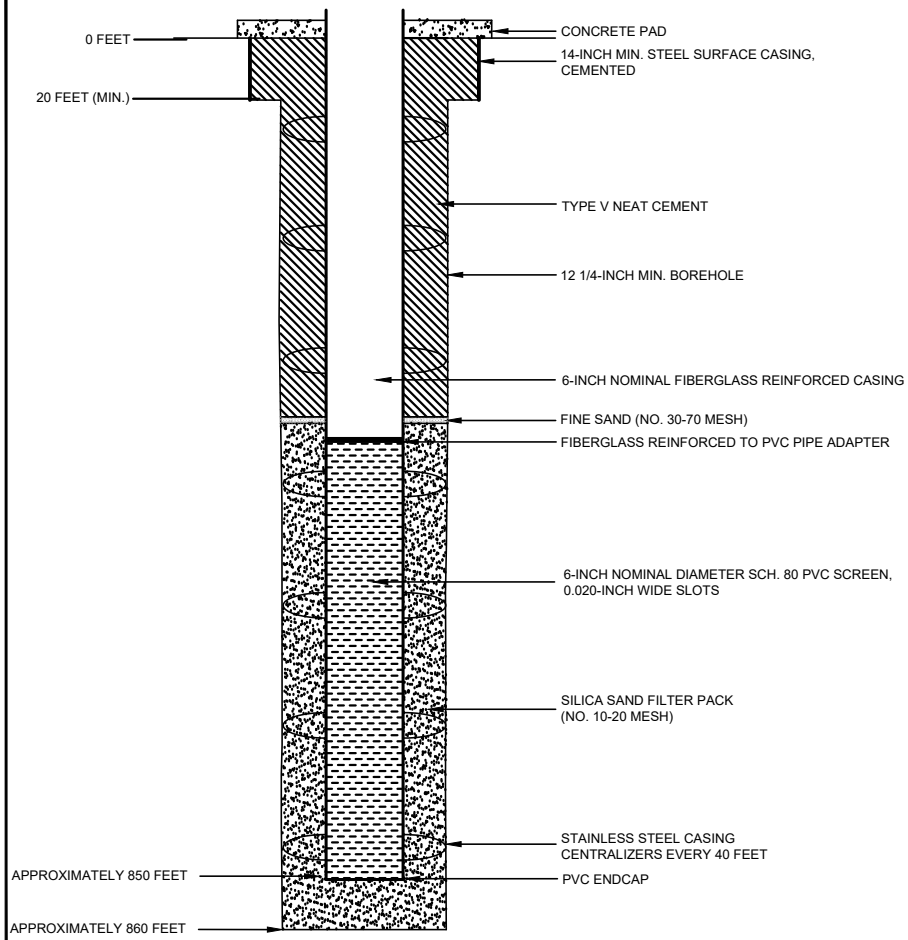

PROPOSED PLUGGING AND
ABANDONMENT
OBSERVATION/PERIMETER WELL

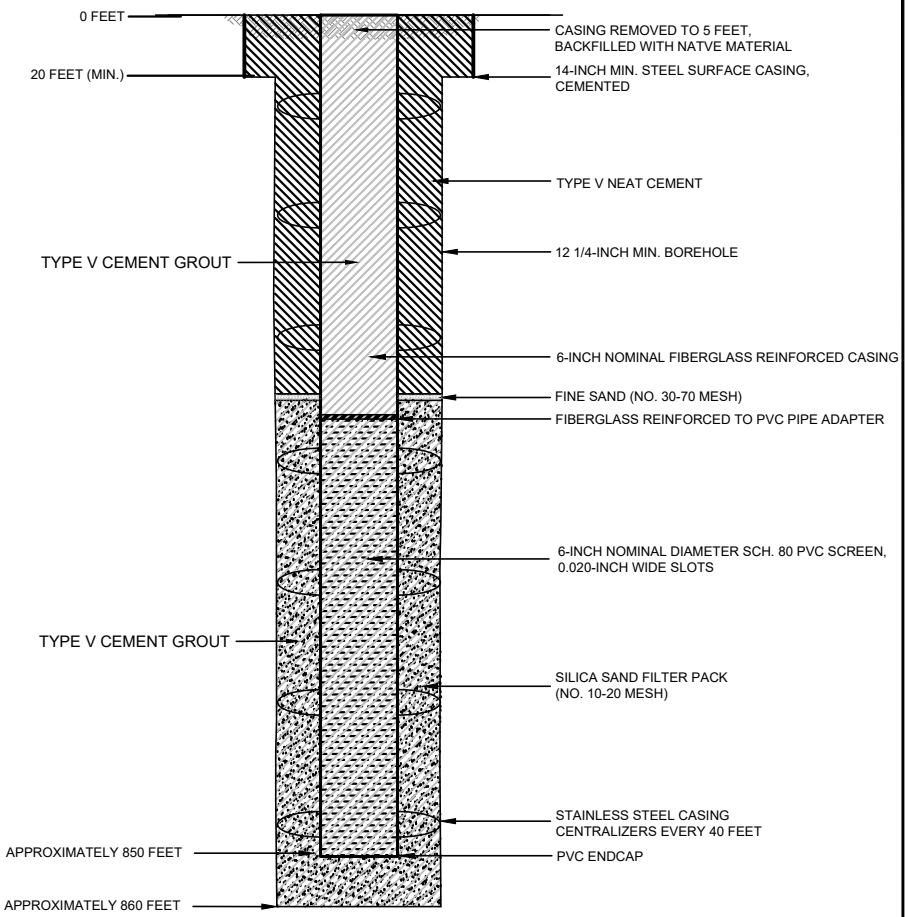

NOTES

1. WELL DESIGN DETAILS ARE BASED ON CORE HOLE AND WELL LOG RECORDS.

HALEY ALDRICH

FLORENCE COPPER, INC.
FLORENCE, ARIZONA

ABANDONMENT SCHEMATIC
RESOURCE BLOCK 98
OBSERVATION/PERIMETER WELL

JULY 2019
SCALE: AS SHOWN

FIGURE E-50b

TABLE E-50
WELLS WITHIN RESOURCE BLOCK 98
FLORENCE COPPER PROJECT
FLORENCE, ARIZONA

Well Number	Easting	Northing	Resource Block	Depth to Top of Bedrock (ft bgs)	Depth to Top of Injection Zone (ft bgs)	Depth to Bottom of Injection Zone (ft bgs)
1418	848967	744151	98	390	430	850
1425	849109	744151	98	390	430	850
1436	849038	744151	98	390	430	850
1437	848896	744151	98	390	430	850
1372	848967	744293	98	390	430	850
1373	849038	744364	98	390	430	850
1374	849109	744434	98	390	430	850
1407	849109	744293	98	390	430	850
1408	849038	744293	98	390	430	850
1409	849109	744364	98	390	430	850
1419	848896	744222	98	390	430	850
1420	848826	744151	98	390	430	850
1422	849109	744222	98	390	430	850
1423	849038	744222	98	390	430	850
1424	848967	744222	98	390	430	850
O25	849250	744364	98	390	430	850
O26	849250	744222	98	390	430	850
O27	848967	744010	98	390	430	850
P49	849179	744434	98	390	430	850
P50	849179	744293	98	390	430	850
P51	849179	744151	98	390	430	850
P52	849038	744081	98	390	430	850
P53	848896	744081	98	390	430	850

Notes:

ft bgs = feet below ground surface

EXHIBIT E-2

Plugging and Abandonment Forms for Non-Class III Wells within AOR

OMB No. 2040-0042 Approval Expires 4/30/2022

United States Environmental Protection Agency

WELL REWORK RECORD, PLUGGING AND ABANDONMENT PLAN, OR PLUGGING AND ABANDONMENT AFFIDAVIT

Name and Address, Phone Number and/or Email of Permittee

Florence Copper Project
1575 W Hunt Hwy,
Florence, AZ 85132

Permit or EPA ID Number	API Number	Full Well Name
R9UIC-AZ3-FY11-1		84

State	County
Arizona	Pinal

Locate well in two directions from nearest lines of quarter section and drilling unit

Surface Location

SE 1/4 of NE 1/4 of Section 28 Township 4S Range 9E

Latitude 33.05329314

Longitude -111.4232294

ft. from (N/S) Line of quarter section

ft. from (E/W) Line of quarter section.

Well Class	Timing of Action (pick one)	Type of Action (pick one)
☐ Class I ☐ Class II ☑ Class III ☐ Class V	☑ Notice Prior to Work Date Expected to Commence March 2021 ☐ Report After Work Date Work Ended	☐ Well Rework ☑ Plugging and Abandonment ☐ Conversion to a Non-Injection Well

Provide a narrative description of the work planned to be performed, or that was performed. Use additional pages as necessary. See instructions.

A workover rig capable of performing the required abandonment operations at the required depths will be moved in and set up over the well. The well casing will be inspected to determine the depth to which the well remains open and if any obstructions are present in the casing; the presence and condition of any existing surface casing will also be documented. If necessary, the well casing will be cleaned out to the planned clean-out depth to enable placement of cement seals.

If surface casing is present, an attempt will be made to remove it. If removal of the surface casing is not feasible, it will be left in the hole and perforated as needed to allow an annular seal to be placed to a depth of at least 25 feet bgs. In areas of agricultural use, the surface casing will be cut at least 5 feet bgs and removed.

If the surface casing cannot be removed, it will be perforated from at least 20 feet below the bedrock-LBFU contact to at least 20 feet above the contact; from at least 20 feet below the base of the MFGU to at least 20 feet above the top of the MFGU; and from at least 25 feet bgs to 5 feet bgs.

A tremie pipe will be used to place Type V cement in the open well from the bottom of the well casing to the top of the well casing. Cement retainers, as described above, will be used to force cement grout into the annulus and behind perforated screen intervals, as necessary.

If the well casing has been obstructed, as much cement as possible will be placed from 100 feet below the LBFU-bedrock contact to the top of the casing.

The volume of Type V cement will be recorded and will not be less than the estimated volume of material required to fill each interval. All cement grout will consist of Type V cement, or equivalent approved in accordance with the UIC Permit.

Certification

I certify under the penalty of law that I have personally examined and am familiar with the information submitted in this document and all attachments and that, based on my inquiry of those individuals immediately responsible for obtaining the information, I believe that the information is true, accurate, and complete. I am aware that there are significant penalties for submitting false information, including the possibliity of fine and imprisonment. (Ref. 40 CFR § 144.32)

Name and Official Title *(Please type or print)*	Signature	Date Signed
Dan Johnson, VP - General Manager		10/3/2019

INSTRUCTIONS FOR FORM 7520-19

This form replaces forms 7520-12 and 7520-14. Use this form only when work is planned or has occurred that affects the well's construction or operation as an injection well, including work on the casing, tubing or packer (or for shallow Class V wells, the subsurface fluid emplacement network). Use one form per injection well. While reports or other information developed by contractors or service companies may be attached, this form must be signed by a responsible entity as described at 40 CFR 144.32. Note: operators closing Class V wells should use Form 7520-17.

NAME, ADDRESS, PHONE AND/OR EMAIL OF PERMITTEE: Enter the name and street address, city/town, state, and ZIP code of the permittee. Also provide an email address (if available) and/or a phone number.

PERMIT OR EPA ID NUMBER: Enter the well identification number or permit number assigned to the well by the EPA or the permitting authority.

API NUMBER: Enter the number assigned by the local jurisdiction (usually a State Oil and Gas Agency) using the American Petroleum Institute standard numbering system.

FULL WELL NAME: Enter the full name of the well or project.

Enter the **STATE** and **COUNTY** where the well is located. For States that do not have counties, use the name of that State's equivalent jurisdiction at a more local level.

WELL LOCATION: Fill in the complete township, range, and section to the nearest quarter-quarter section. A township is north or south of the baseline, and a range is east or west of the principal meridian (e.g., T12N, R34W). Also include the distance, in feet, from the nearest north or south line and nearest east or west line of the quarter-section. Also, enter the **latitude** and **longitude** of the well in decimal degrees, to five or six places if possible; be sure to include a negative sign for the longitude of a well in the Western Hemisphere and a negative sign for the latitude of a well in the Southern Hemisphere.

Enter the **WELL CLASS,** i.e., the class of injection well as defined in 40 CFR 144.6.

TIMING OF THE ACTION: Check ***Notice prior to work*** if the activity has not yet occurred (i.e., is planned). Check ***Report after work*** if the activity described has already occurred. As appropriate, include the date the activity is expected to start or the date the activity was completed. (Note this may not be available, e.g., for a plugging plan submitted with a permit application.)

TYPE OF ACTION: Check the appropriate box to describe the kind of activity being reported. Check ***Well Rework*** for work that was/will be performed on the well after it has already been in operation as an injection well. Check ***Plugging and Abandonment*** to report on plans for or descriptions of final closure/plugging after use as an injection well. Check ***Conversion to a Non-Injection Well*** if the well is to be converted to something other than an injection well.

Provide a **NARRATIVE DESCRIPTION** of the work planned to be performed, or that was performed. The narrative should include a description of the main procedures planned or that occurred during the work activity. A service company report, daily report, or similar document may be attached if it includes all the requested information and is clear and legible.

For well reworks, include the following information: The reason for the well rework; depths of activity; type of activity; changes to injection well configuration, well casing, or cement behind casing; any plug added to the well and its depth; any newly drilled interval and its depth; method(s) to demonstrate that the well has mechanical integrity (as applicable); and any deviations from the approved rework plan (as applicable).

For a well plugging plan, include the following information: Reason for the well plugging; number of plugs placed, and their depths; materials used as plugs (e.g., cast iron bridge plug, cement, cement retainer); method to set plugs; and wait-on-cement times, if any. Also provide one or more cost estimates from an independent firm in the business of plugging and abandoning wells to plug the well as described in the plan.

For well plugging affidavit, include the following information: Reason for the well plugging; number of plugs placed, and their depths; materials used as plugs (e.g., cast iron bridge plug, cement, cement retainer); method to set plugs; wait-on-cement times, if any; and any deviations from the approved plugging plan (if applicable).

For conversion to a non-injection well, include the following information: Depths of activity; type of activity; changes to injection well configuration, well casing, or cement behind casing; any plug added to the well and its depth; any newly drilled interval and its depth; depths of new perforations; and method(s) to demonstrate that the well has mechanical integrity (as applicable).

For all of the above activities, include a well sketch depicting the work, results of well tests/logging performed, service company tickets, and any other available information demonstrating how the work was/is to be performed. Also, specify whether depths are below ground surface, relative to Kelly bushing, etc.

CERTIFICATION: This form must be signed and dated by either: a responsible corporate officer for a corporation, by a general partner for a partnership, by the proprietor of a sole proprietorship, or by a principal executive or ranking elected official for a public agency.

PAPERWORK REDUCTION ACT NOTICE: The public reporting and recordkeeping burden for this collection of information is estimated to average between 6.0 and 7.9 hours per response, depending on the injection well class. Burden means the total time, effort, or financial resource expended by persons to generate, maintain, retain, or disclose or provide information to or for a Federal Agency. This includes the time needed to review instructions; develop, acquire, install, and utilize technology and systems for the purposes of collecting, validating, and verifying information, processing and maintaining information, and disclosing and providing information; adjust the existing ways to comply with any previously applicable instructions and requirements; train personnel to be able to respond to the collection of information; search data sources; complete and review the collection of information; and, transmit or otherwise disclose the information. An agency may not conduct or sponsor, and a person is not required to respond to, a collection of information unless it displays a currently valid OMB control number. Send comments on the Agency's need for this information, the accuracy of the provided burden estimates, and any suggested methods for minimizing respondent burden, including the use of automated collection techniques to Director, Collection Strategies Division, U.S. Environmental Protection Agency (2822), 1200 Pennsylvania Ave., NW., Washington, D.C. 20460. Include the OMB control number in any correspondence. Do not send the completed forms to this address.

PROPOSED DESIGN
EXPLORATION BOREHOLE 84

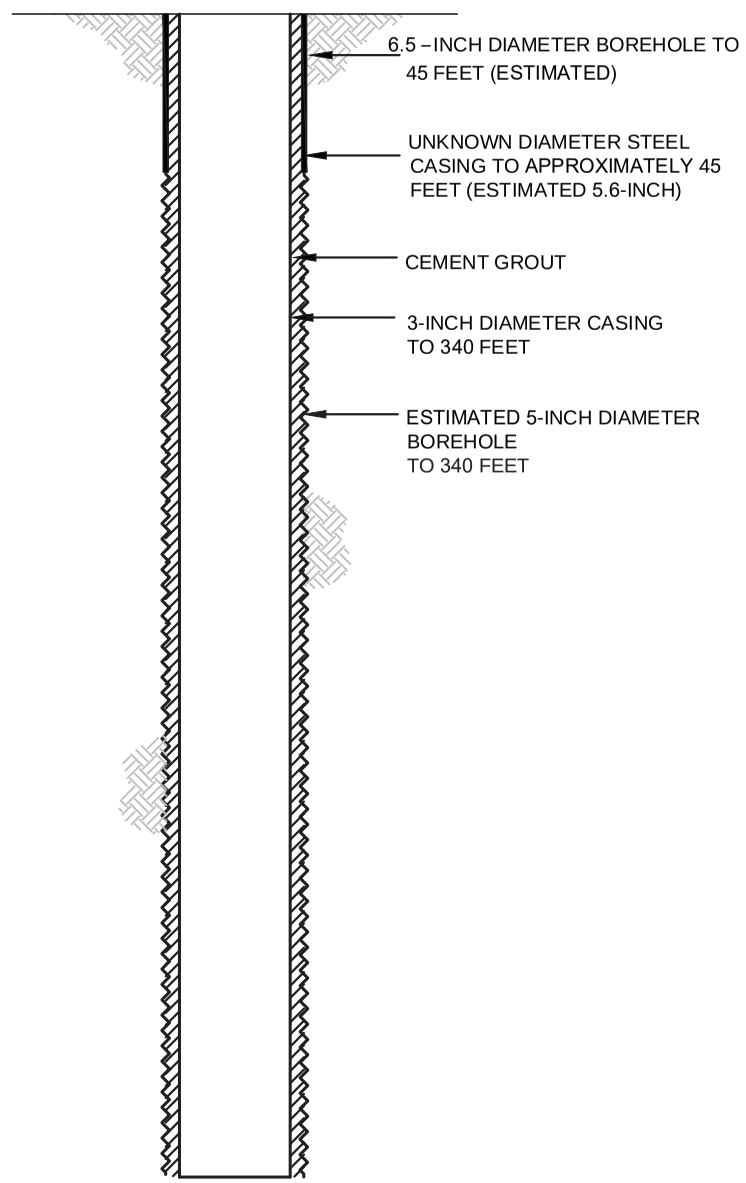

PROPOSED PLUGGING AND ABANDONMENT
EXPLORATION BOREHOLE 84

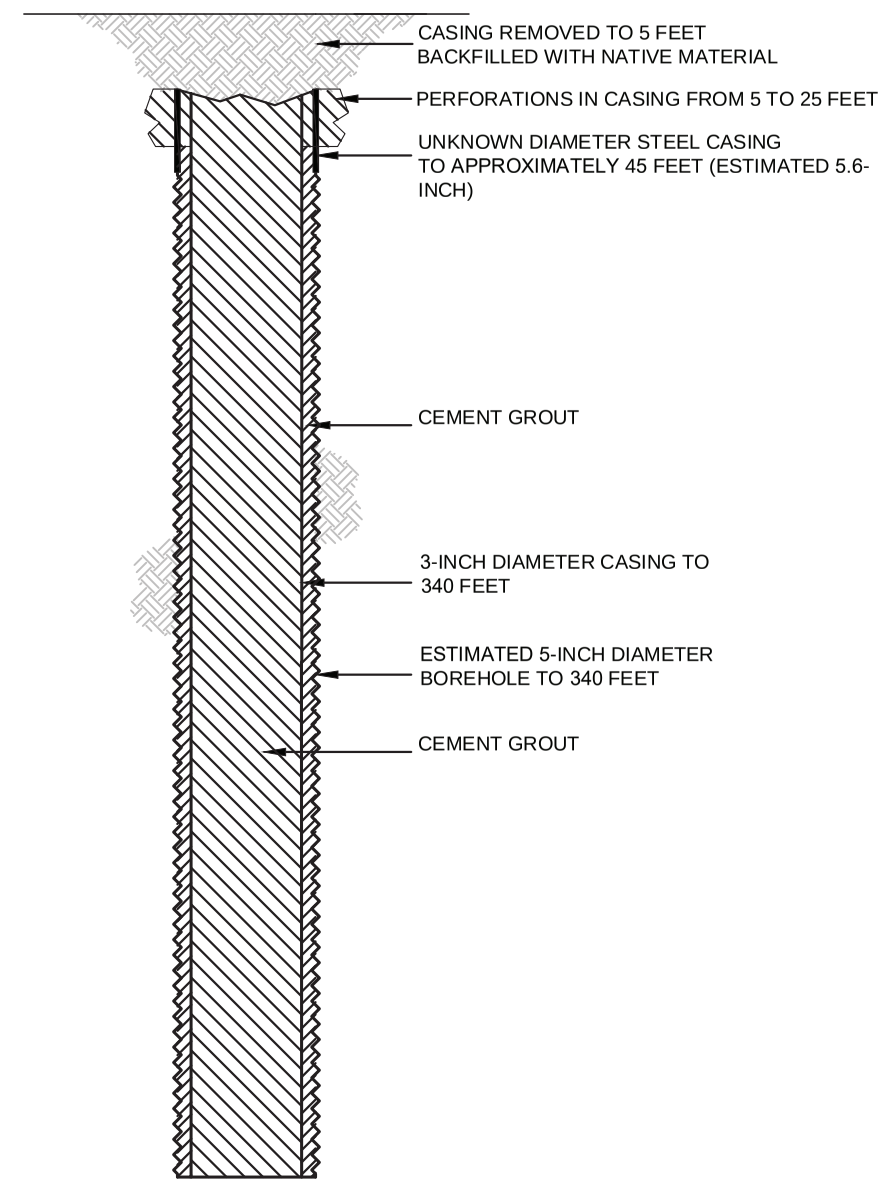

HALEY ALDRICH

FLORENCE COPPER, INC.
FLORENCE, ARIZONA

ABANDONMENT EXPLORATION
BOREHOLE 84

FLORENCE COPPER INC.

NOT TO SCALE
SEPTEMBEWR 2019

FIGURE 1

MOBINI, GITA
Printed: 4/21/2017 12:13 PM Layout: ABANDON (2)
G:\PROJECTS\CURIS RESOURCES\38706-CURIS FEASIBILITY\DRAWINGS\EPAWELLABANDON\448S_ABANDON.DWG

OMB No. 2040-0042 Approval Expires 4/30/2022

United States Environmental Protection Agency

EPA

WELL REWORK RECORD, PLUGGING AND ABANDONMENT PLAN, OR PLUGGING AND ABANDONMENT AFFIDAVIT

Name and Address, Phone Number and/or Email of Permittee

Florence Copper Project
1575 W Hunt Hwy,
Florence, AZ 85132

Permit or EPA ID Number	API Number	Full Well Name
R9UIC-AZ3-FY11-1		BIA 10B

State	County
Arizona	Pinal

Locate well in two directions from nearest lines of quarter section and drilling unit

Latitude 33.04889263

Longitude -111.4300199

Surface Location

SE **1/4 of** SW **1/4 of Section** 28 **Township** 4S **Range** 9E

_____ **ft. from (N/S)** _____ **Line of quarter section**

_____ **ft. from (E/W)** _____ **Line of quarter section.**

Well Class	Timing of Action (pick one)	Type of Action (pick one)
☐ Class I ☐ Class II ☑ Class III ☐ Class V	☑ Notice Prior to Work Date Expected to Commence March 2021 ☐ Report After Work Date Work Ended	☐ Well Rework ☑ Plugging and Abandonment ☐ Conversion to a Non-Injection Well

Provide a narrative description of the work planned to be performed, or that was performed. Use additional pages as necessary. See instructions.

A workover rig capable of performing the required abandonment operations at the required depths will be moved in and set up over the well. The well casing will be inspected to determine the depth to which the well remains open and if any obstructions are present in the casing; the presence and condition of any existing surface casing will also be documented. If necessary, the well casing will be cleaned out to the planned clean-out depth to enable placement of cement seals.

If surface casing is present, an attempt will be made to remove it. If removal of the surface casing is not feasible, it will be left in the hole and perforated as needed to allow an annular seal to be placed to a depth of at least 25 feet bgs. In areas of agricultural use, the surface casing will be cut at least 5 feet bgs and removed.

If the surface casing cannot be removed, it will be perforated from at least 20 feet below the bedrock-LBFU contact to at least 20 feet above the contact; from at least 20 feet below the base of the MFGU to at least 20 feet above the top of the MFGU; and from at least 25 feet bgs to 5 feet bgs.

A tremie pipe will be used to place Type V cement in the open well from the bottom of the well casing to the top of the well casing. Cement retainers, as described above, will be used to force cement grout into the annulus and behind perforated screen intervals, as necessary.

If the well casing has been obstructed, as much cement as possible will be placed from 100 feet below the LBFU-bedrock contact to the top of the casing.

The volume of Type V cement will be recorded and will not be less than the estimated volume of material required to fill each interval. All cement grout will consist of Type V cement, or equivalent approved in accordance with the UIC Permit.

Certification

I certify under the penalty of law that I have personally examined and am familiar with the information submitted in this document and all attachments and that, based on my inquiry of those individuals immediately responsible for obtaining the information, I believe that the information is true, accurate, and complete. I am aware that there are significant penalties for submitting false information, including the possibliity of fine and imprisonment. (Ref. 40 CFR § 144.32)

Name and Official Title *(Please type or print)*	Signature	Date Signed
Dan Johnson, VP - General Manager		10/3/2019

INSTRUCTIONS FOR FORM 7520-19

This form replaces forms 7520-12 and 7520-14. Use this form only when work is planned or has occurred that affects the well's construction or operation as an injection well, including work on the casing, tubing or packer (or for shallow Class V wells, the subsurface fluid emplacement network). Use one form per injection well. While reports or other information developed by contractors or service companies may be attached, this form must be signed by a responsible entity as described at 40 CFR 144.32. Note: operators closing Class V wells should use Form 7520-17.

NAME, ADDRESS, PHONE AND/OR EMAIL OF PERMITTEE: Enter the name and street address, city/town, state, and ZIP code of the permittee. Also provide an email address (if available) and/or a phone number.

PERMIT OR EPA ID NUMBER: Enter the well identification number or permit number assigned to the well by the EPA or the permitting authority.

API NUMBER: Enter the number assigned by the local jurisdiction (usually a State Oil and Gas Agency) using the American Petroleum Institute standard numbering system.

FULL WELL NAME: Enter the full name of the well or project.

Enter the **STATE** and **COUNTY** where the well is located. For States that do not have counties, use the name of that State's equivalent jurisdiction at a more local level.

WELL LOCATION: Fill in the complete township, range, and section to the nearest quarter-quarter section. A township is north or south of the baseline, and a range is east or west of the principal meridian (e.g., T12N, R34W). Also include the distance, in feet, from the nearest north or south line and nearest east or west line of the quarter-section. Also, enter the **latitude** and **longitude** of the well in decimal degrees, to five or six places if possible; be sure to include a negative sign for the longitude of a well in the Western Hemisphere and a negative sign for the latitude of a well in the Southern Hemisphere.

Enter the **WELL CLASS,** i.e., the class of injection well as defined in 40 CFR 144.6.

TIMING OF THE ACTION: Check ***Notice prior to work*** if the activity has not yet occurred (i.e., is planned). Check ***Report after work*** if the activity described has already occurred. As appropriate, include the date the activity is expected to start or the date the activity was completed. (Note this may not be available, e.g., for a plugging plan submitted with a permit application.)

TYPE OF ACTION: Check the appropriate box to describe the kind of activity being reported. Check ***Well Rework*** for work that was/will be performed on the well after it has already been in operation as an injection well. Check ***Plugging and Abandonment*** to report on plans for or descriptions of final closure/plugging after use as an injection well. Check ***Conversion to a Non-Injection Well*** if the well is to be converted to something other than an injection well.

Provide a **NARRATIVE DESCRIPTION** of the work planned to be performed, or that was performed. The narrative should include a description of the main procedures planned or that occurred during the work activity. A service company report, daily report, or similar document may be attached if it includes all the requested information and is clear and legible.

For well reworks, include the following information: The reason for the well rework; depths of activity; type of activity; changes to injection well configuration, well casing, or cement behind casing; any plug added to the well and its depth; any newly drilled interval and its depth; method(s) to demonstrate that the well has mechanical integrity (as applicable); and any deviations from the approved rework plan (as applicable).

For a well plugging plan, include the following information: Reason for the well plugging; number of plugs placed, and their depths; materials used as plugs (e.g., cast iron bridge plug, cement, cement retainer); method to set plugs; and wait-on-cement times, if any. Also provide one or more cost estimates from an independent firm in the business of plugging and abandoning wells to plug the well as described in the plan.

For well plugging affidavit, include the following information: Reason for the well plugging; number of plugs placed, and their depths; materials used as plugs (e.g., cast iron bridge plug, cement, cement retainer); method to set plugs; wait-on-cement times, if any; and any deviations from the approved plugging plan (if applicable).

For conversion to a non-injection well, include the following information: Depths of activity; type of activity; changes to injection well configuration, well casing, or cement behind casing; any plug added to the well and its depth; any newly drilled interval and its depth; depths of new perforations; and method(s) to demonstrate that the well has mechanical integrity (as applicable).

For all of the above activities, include a well sketch depicting the work, results of well tests/logging performed, service company tickets, and any other available information demonstrating how the work was/is to be performed. Also, specify whether depths are below ground surface, relative to Kelly bushing, etc.

CERTIFICATION: This form must be signed and dated by either: a responsible corporate officer for a corporation, by a general partner for a partnership, by the proprietor of a sole proprietorship, or by a principal executive or ranking elected official for a public agency.

PAPERWORK REDUCTION ACT NOTICE: The public reporting and recordkeeping burden for this collection of information is estimated to average between 6.0 and 7.9 hours per response, depending on the injection well class. Burden means the total time, effort, or financial resource expended by persons to generate, maintain, retain, or disclose or provide information to or for a Federal Agency. This includes the time needed to review instructions; develop, acquire, install, and utilize technology and systems for the purposes of collecting, validating, and verifying information, processing and maintaining information, and disclosing and providing information; adjust the existing ways to comply with any previously applicable instructions and requirements; train personnel to be able to respond to the collection of information; search data sources; complete and review the collection of information; and, transmit or otherwise disclose the information. An agency may not conduct or sponsor, and a person is not required to respond to, a collection of information unless it displays a currently valid OMB control number. Send comments on the Agency's need for this information, the accuracy of the provided burden estimates, and any suggested methods for minimizing respondent burden, including the use of automated collection techniques to Director, Collection Strategies Division, U.S. Environmental Protection Agency (2822), 1200 Pennsylvania Ave., NW., Washington, D.C. 20460. Include the OMB control number in any correspondence. Do not send the completed forms to this address.

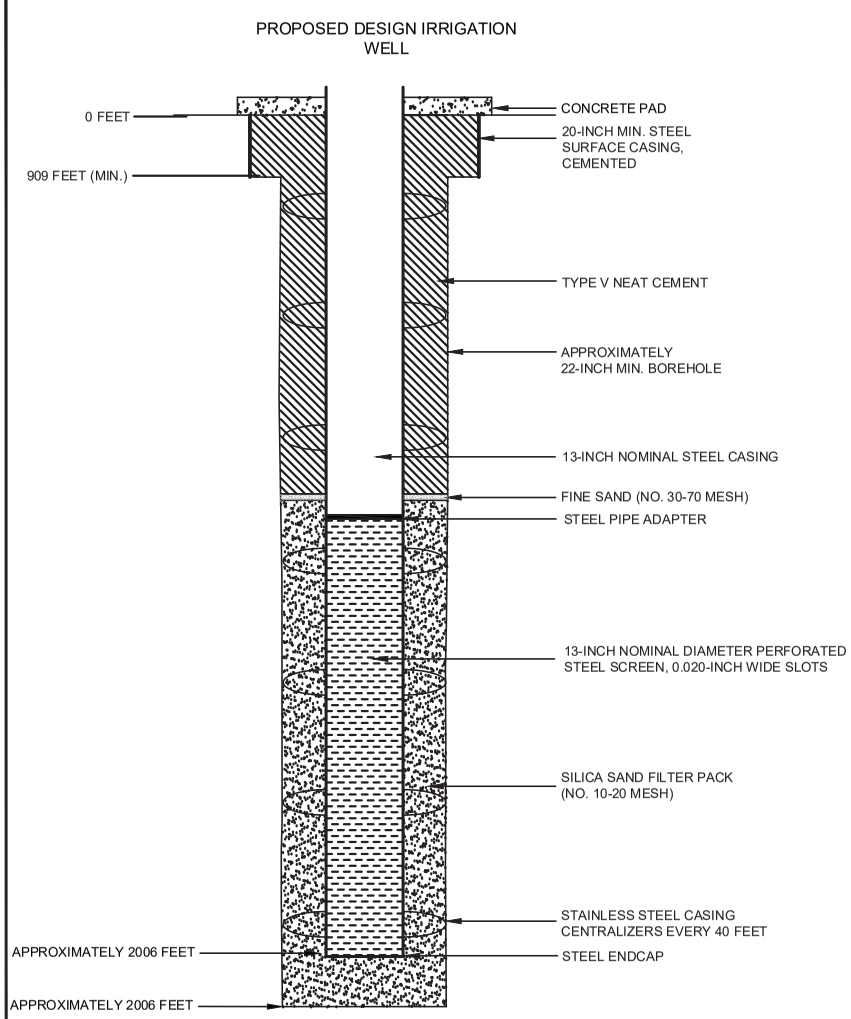

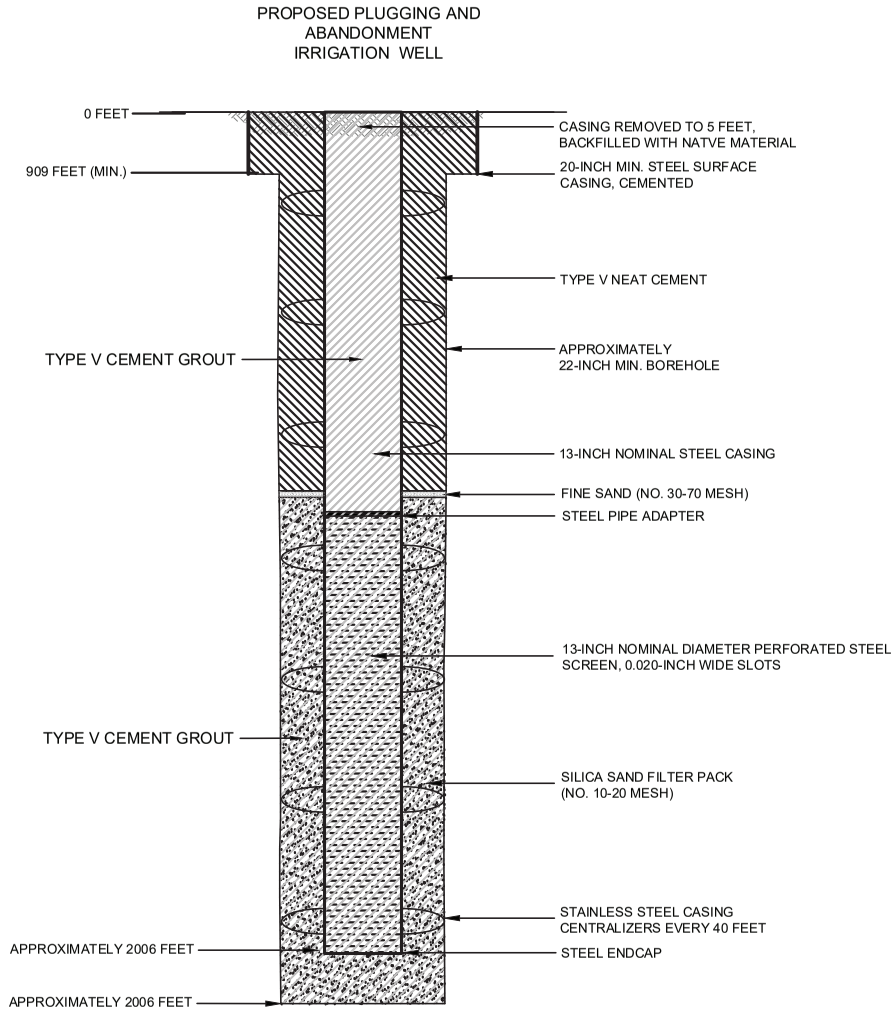

NOTES

1. WELL DESIGN DETAILS ARE BASED ON CORE HOLE AND WELL LOG RECORDS.

HALEY ALDRICH

FLORENCE COPPER, INC.
FLORENCE, ARIZONA

ABANDONMENT
SCHEMATIC IRRIGATION
WELL BIA 10B

SEPTEMBER 2019
SCALE: AS SHOWN

FIGURE 1

OMB No. 2040-0042 Approval Expires 4/30/2022

United States Environmental Protection Agency

WELL REWORK RECORD, PLUGGING AND ABANDONMENT PLAN, OR PLUGGING AND ABANDONMENT AFFIDAVIT

Name and Address, Phone Number and/or Email of Permittee

Florence Copper Project
1575 W Hunt Hwy,
Florence, AZ 85132

Permit or EPA ID Number	API Number	Full Well Name
R9UIC-AZ3-FY11-1		BIA 9

State	County
Arizona	Pinal

Locate well in two directions from nearest lines of quarter section and drilling unit

Latitude 33.04917142

Longitude -111.4359237

Surface Location

SW **1/4 of** SW **1/4 of Section** 28 **Township** 4S **Range** 9E

_____ **ft. from (N/S)** _____ **Line of quarter section**

_____ **ft. from (E/W)** _____ **Line of quarter section.**

Well Class	Timing of Action (pick one)	Type of Action (pick one)
☐ Class I ☐ Class II ☑ Class III ☐ Class V	☑ Notice Prior to Work Date Expected to Commence March 2021 ☐ Report After Work Date Work Ended	☐ Well Rework ☑ Plugging and Abandonment ☐ Conversion to a Non-Injection Well

Provide a narrative description of the work planned to be performed, or that was performed. Use additional pages as necessary. See instructions.

A workover rig capable of performing the required abandonment operations at the required depths will be moved in and set up over the well. The well casing will be inspected to determine the depth to which the well remains open and if any obstructions are present in the casing; the presence and condition of any existing surface casing will also be documented. If necessary, the well casing will be cleaned out to the planned clean-out depth to enable placement of cement seals.

If surface casing is present, an attempt will be made to remove it. If removal of the surface casing is not feasible, it will be left in the hole and perforated as needed to allow an annular seal to be placed to a depth of at least 25 feet bgs. In areas of agricultural use, the surface casing will be cut at least 5 feet bgs and removed.

If the surface casing cannot be removed, it will be perforated from at least 20 feet below the bedrock-LBFU contact to at least 20 feet above the contact; from at least 20 feet below the base of the MFGU to at least 20 feet above the top of the MFGU; and from at least 25 feet bgs to 5 feet bgs.

A tremie pipe will be used to place Type V cement in the open well from the bottom of the well casing to the top of the well casing. Cement retainers, as described above, will be used to force cement grout into the annulus and behind perforated screen intervals, as necessary.

If the well casing has been obstructed, as much cement as possible will be placed from 100 feet below the LBFU-bedrock contact to the top of the casing.

The volume of Type V cement will be recorded and will not be less than the estimated volume of material required to fill each interval. All cement grout will consist of Type V cement, or equivalent approved in accordance with the UIC Permit.

Certification

I certify under the penalty of law that I have personally examined and am familiar with the information submitted in this document and all attachments and that, based on my inquiry of those individuals immediately responsible for obtaining the information, I believe that the information is true, accurate, and complete. I am aware that there are significant penalties for submitting false information, including the possibliity of fine and imprisonment. (Ref. 40 CFR § 144.32)

Name and Official Title *(Please type or print)*	Signature	Date Signed
Dan Johnson, VP - General Manager		10/3/2019

INSTRUCTIONS FOR FORM 7520-19

This form replaces forms 7520-12 and 7520-14. Use this form only when work is planned or has occurred that affects the well's construction or operation as an injection well, including work on the casing, tubing or packer (or for shallow Class V wells, the subsurface fluid emplacement network). Use one form per injection well. While reports or other information developed by contractors or service companies may be attached, this form must be signed by a responsible entity as described at 40 CFR 144.32. Note: operators closing Class V wells should use Form 7520-17.

NAME, ADDRESS, PHONE AND/OR EMAIL OF PERMITTEE: Enter the name and street address, city/town, state, and ZIP code of the permittee. Also provide an email address (if available) and/or a phone number.

PERMIT OR EPA ID NUMBER: Enter the well identification number or permit number assigned to the well by the EPA or the permitting authority.

API NUMBER: Enter the number assigned by the local jurisdiction (usually a State Oil and Gas Agency) using the American Petroleum Institute standard numbering system.

FULL WELL NAME: Enter the full name of the well or project.

Enter the **STATE** and **COUNTY** where the well is located. For States that do not have counties, use the name of that State's equivalent jurisdiction at a more local level.

WELL LOCATION: Fill in the complete township, range, and section to the nearest quarter-quarter section. A township is north or south of the baseline, and a range is east or west of the principal meridian (e.g., T12N, R34W). Also include the distance, in feet, from the nearest north or south line and nearest east or west line of the quarter-section. Also, enter the **latitude** and **longitude** of the well in decimal degrees, to five or six places if possible; be sure to include a negative sign for the longitude of a well in the Western Hemisphere and a negative sign for the latitude of a well in the Southern Hemisphere.

Enter the **WELL CLASS,** i.e., the class of injection well as defined in 40 CFR 144.6.

TIMING OF THE ACTION: Check ***Notice prior to work*** if the activity has not yet occurred (i.e., is planned). Check ***Report after work*** if the activity described has already occurred. As appropriate, include the date the activity is expected to start or the date the activity was completed. (Note this may not be available, e.g., for a plugging plan submitted with a permit application.)

TYPE OF ACTION: Check the appropriate box to describe the kind of activity being reported. Check ***Well Rework*** for work that was/will be performed on the well after it has already been in operation as an injection well. Check ***Plugging and Abandonment*** to report on plans for or descriptions of final closure/plugging after use as an injection well. Check ***Conversion to a Non-Injection Well*** if the well is to be converted to something other than an injection well.

Provide a **NARRATIVE DESCRIPTION** of the work planned to be performed, or that was performed. The narrative should include a description of the main procedures planned or that occurred during the work activity. A service company report, daily report, or similar document may be attached if it includes all the requested information and is clear and legible.

For well reworks, include the following information: The reason for the well rework; depths of activity; type of activity; changes to injection well configuration, well casing, or cement behind casing; any plug added to the well and its depth; any newly drilled interval and its depth; method(s) to demonstrate that the well has mechanical integrity (as applicable); and any deviations from the approved rework plan (as applicable).

For a well plugging plan, include the following information: Reason for the well plugging; number of plugs placed, and their depths; materials used as plugs (e.g., cast iron bridge plug, cement, cement retainer); method to set plugs; and wait-on-cement times, if any. Also provide one or more cost estimates from an independent firm in the business of plugging and abandoning wells to plug the well as described in the plan.

For well plugging affidavit, include the following information: Reason for the well plugging; number of plugs placed, and their depths; materials used as plugs (e.g., cast iron bridge plug, cement, cement retainer); method to set plugs; wait-on-cement times, if any; and any deviations from the approved plugging plan (if applicable).

For conversion to a non-injection well, include the following information: Depths of activity; type of activity; changes to injection well configuration, well casing, or cement behind casing; any plug added to the well and its depth; any newly drilled interval and its depth; depths of new perforations; and method(s) to demonstrate that the well has mechanical integrity (as applicable).

For all of the above activities, include a well sketch depicting the work, results of well tests/logging performed, service company tickets, and any other available information demonstrating how the work was/is to be performed. Also, specify whether depths are below ground surface, relative to Kelly bushing, etc.

CERTIFICATION: This form must be signed and dated by either: a responsible corporate officer for a corporation, by a general partner for a partnership, by the proprietor of a sole proprietorship, or by a principal executive or ranking elected official for a public agency.

PAPERWORK REDUCTION ACT NOTICE: The public reporting and recordkeeping burden for this collection of information is estimated to average between 6.0 and 7.9 hours per response, depending on the injection well class. Burden means the total time, effort, or financial resource expended by persons to generate, maintain, retain, or disclose or provide information to or for a Federal Agency. This includes the time needed to review instructions; develop, acquire, install, and utilize technology and systems for the purposes of collecting, validating, and verifying information, processing and maintaining information, and disclosing and providing information; adjust the existing ways to comply with any previously applicable instructions and requirements; train personnel to be able to respond to the collection of information; search data sources; complete and review the collection of information; and, transmit or otherwise disclose the information. An agency may not conduct or sponsor, and a person is not required to respond to, a collection of information unless it displays a currently valid OMB control number. Send comments on the Agency's need for this information, the accuracy of the provided burden estimates, and any suggested methods for minimizing respondent burden, including the use of automated collection techniques to Director, Collection Strategies Division, U.S. Environmental Protection Agency (2822), 1200 Pennsylvania Ave., NW., Washington, D.C. 20460. Include the OMB control number in any correspondence. Do not send the completed forms to this address.

Saved by: MNICHOLLS Printed: 7/25/2019 7:20 PM Sheet: HA-FIG-A-L(2)
\\HALEYALDRICH.COM\SHARE\PHX_COMMON\PROJECTS\FLORENCE COPPER\132473 FLORENCE GROUNDWATER PERMITTING\CAD\132473_000-OBSERVATION_WELL_CONSTRUCTION DIAGRAM.DWG

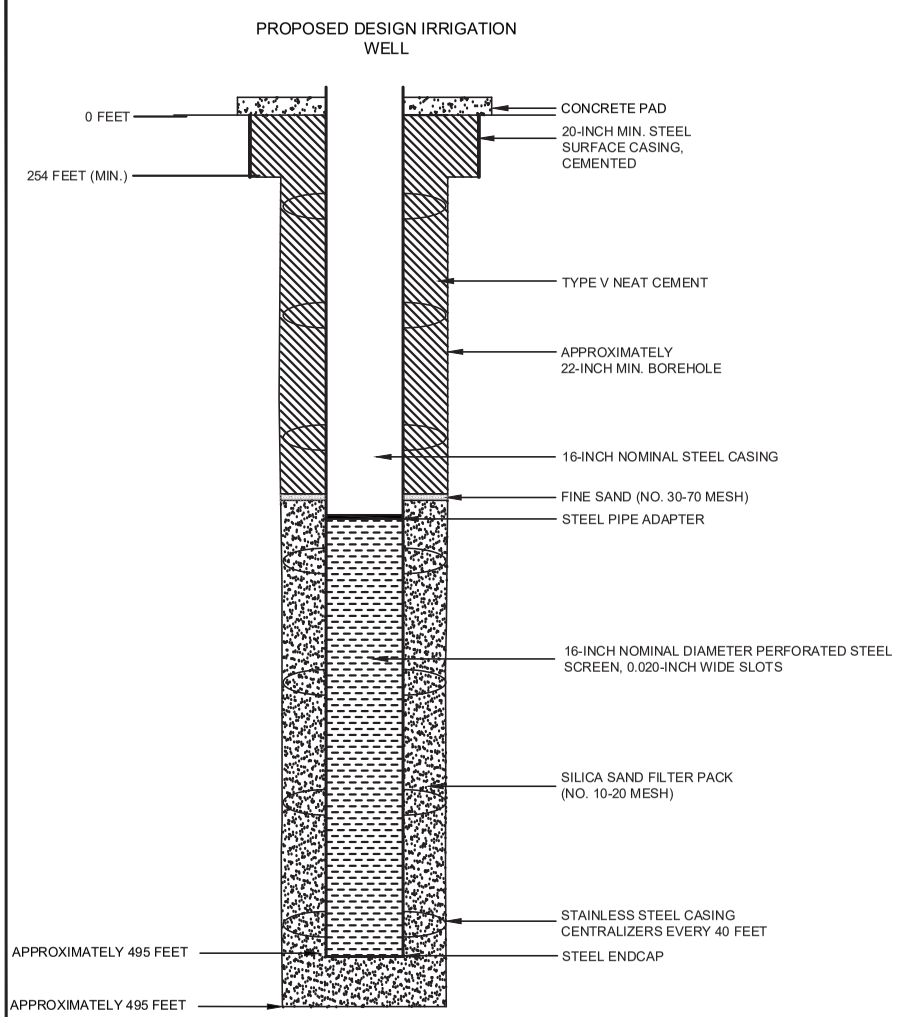

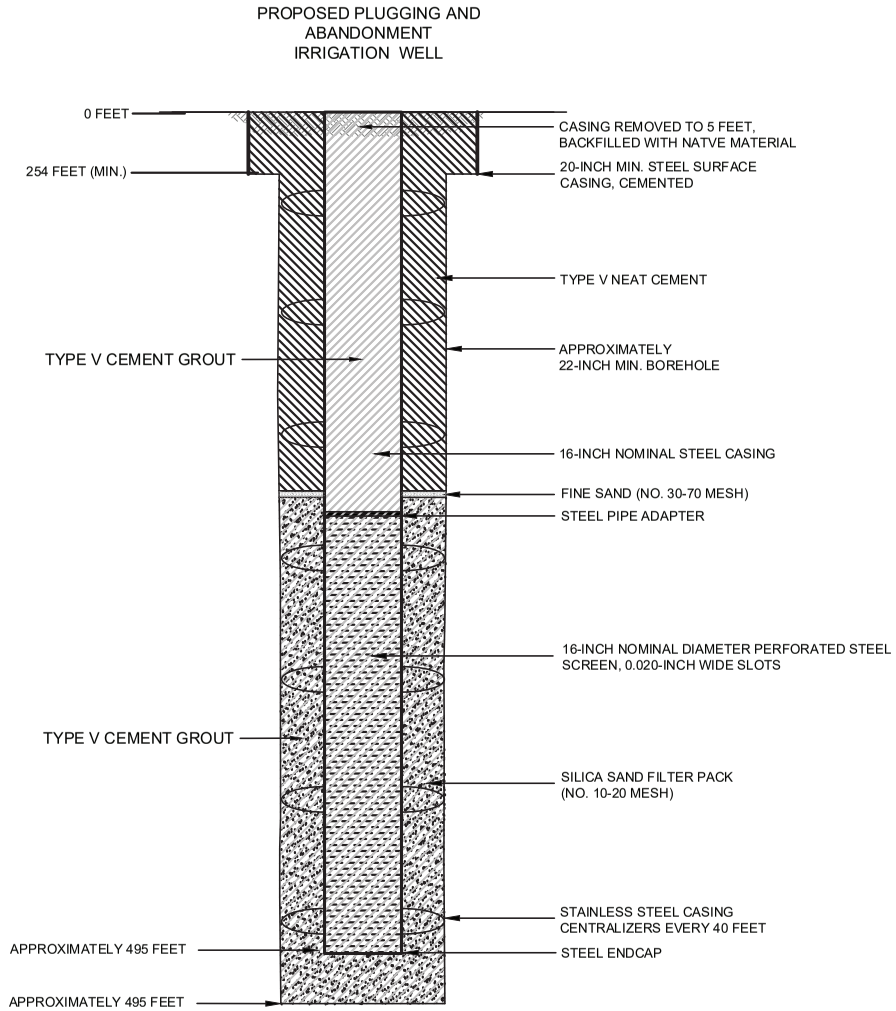

NOTES

1. WELL DESIGN DETAILS ARE BASED ON CORE HOLE AND WELL LOG RECORDS.

HALEY ALDRICH

FLORENCE COPPER, INC.
FLORENCE, ARIZONA

ABANDONMENT SCHEMATIC
IRRIGATION WELL BIA 9

SEPTEMBER 2019
SCALE: AS SHOWN

FIGURE 1

OMB No. 2040-0042 Approval Expires 4/30/2022

United States Environmental Protection Agency

WELL REWORK RECORD, PLUGGING AND ABANDONMENT PLAN, OR PLUGGING AND ABANDONMENT AFFIDAVIT

Name and Address, Phone Number and/or Email of Permittee

Florence Copper Project
1575 W Hunt Hwy,
Florence, AZ 85132

Permit or EPA ID Number	API Number	Full Well Name
R9UIC-AZ3-FY11-1		DM-A

State	County
Arizona	Pinal

Locate well in two directions from nearest lines of quarter section and drilling unit

Latitude 33.050933

Surface Location

NE **1/4 of** SW **1/4 of Section** 28 **Township** 4S **Range** 9E

Longitude -111.4298987

_____ **ft. from (N/S)** _____ **Line of quarter section**

_____ **ft. from (E/W)** _____ **Line of quarter section.**

Well Class	Timing of Action (pick one)	Type of Action (pick one)
☐ Class I ☐ Class II ☑ Class III ☐ Class V	☑ Notice Prior to Work Date Expected to Commence March 2021 ☐ Report After Work Date Work Ended	☐ Well Rework ☑ Plugging and Abandonment ☐ Conversion to a Non-Injection Well

Provide a narrative description of the work planned to be performed, or that was performed. Use additional pages as necessary. See instructions.

A workover rig capable of performing the required abandonment operations at the required depths will be moved in and set up over the well. The well casing will be inspected to determine the depth to which the well remains open and if any obstructions are present in the casing; the presence and condition of any existing surface casing will also be documented. If necessary, the well casing will be cleaned out to the planned clean-out depth to enable placement of cement seals.

If surface casing is present, an attempt will be made to remove it. If removal of the surface casing is not feasible, it will be left in the hole and perforated as needed to allow an annular seal to be placed to a depth of at least 25 feet bgs. In areas of agricultural use, the surface casing will be cut at least 5 feet bgs and removed.

If the surface casing cannot be removed, it will be perforated from at least 20 feet below the bedrock-LBFU contact to at least 20 feet above the contact; from at least 20 feet below the base of the MFGU to at least 20 feet above the top of the MFGU; and from at least 25 feet bgs to 5 feet bgs.

A tremie pipe will be used to place Type V cement in the open well from the bottom of the well casing to the top of the well casing. Cement retainers, as described above, will be used to force cement grout into the annulus and behind perforated screen intervals, as necessary.

If the well casing has been obstructed, as much cement as possible will be placed from 100 feet below the LBFU-bedrock contact to the top of the casing.

The volume of Type V cement will be recorded and will not be less than the estimated volume of material required to fill each interval. All cement grout will consist of Type V cement, or equivalent approved in accordance with the UIC Permit.

Certification

I certify under the penalty of law that I have personally examined and am familiar with the information submitted in this document and all attachments and that, based on my inquiry of those individuals immediately responsible for obtaining the information, I believe that the information is true, accurate, and complete. I am aware that there are significant penalties for submitting false information, including the possibliity of fine and imprisonment. (Ref. 40 CFR § 144.32)

Name and Official Title *(Please type or print)*	Signature	Date Signed
Dan Johnson, VP - General Manager		10/3/2019

INSTRUCTIONS FOR FORM 7520-19

This form replaces forms 7520-12 and 7520-14. Use this form only when work is planned or has occurred that affects the well's construction or operation as an injection well, including work on the casing, tubing or packer (or for shallow Class V wells, the subsurface fluid emplacement network). Use one form per injection well. While reports or other information developed by contractors or service companies may be attached, this form must be signed by a responsible entity as described at 40 CFR 144.32. Note: operators closing Class V wells should use Form 7520-17.

NAME, ADDRESS, PHONE AND/OR EMAIL OF PERMITTEE: Enter the name and street address, city/town, state, and ZIP code of the permittee. Also provide an email address (if available) and/or a phone number.

PERMIT OR EPA ID NUMBER: Enter the well identification number or permit number assigned to the well by the EPA or the permitting authority.

API NUMBER: Enter the number assigned by the local jurisdiction (usually a State Oil and Gas Agency) using the American Petroleum Institute standard numbering system.

FULL WELL NAME: Enter the full name of the well or project.

Enter the **STATE** and **COUNTY** where the well is located. For States that do not have counties, use the name of that State's equivalent jurisdiction at a more local level.

WELL LOCATION: Fill in the complete township, range, and section to the nearest quarter-quarter section. A township is north or south of the baseline, and a range is east or west of the principal meridian (e.g., T12N, R34W). Also include the distance, in feet, from the nearest north or south line and nearest east or west line of the quarter-section. Also, enter the **latitude** and **longitude** of the well in decimal degrees, to five or six places if possible; be sure to include a negative sign for the longitude of a well in the Western Hemisphere and a negative sign for the latitude of a well in the Southern Hemisphere.

Enter the **WELL CLASS,** i.e., the class of injection well as defined in 40 CFR 144.6.

TIMING OF THE ACTION: Check ***Notice prior to work*** if the activity has not yet occurred (i.e., is planned). Check ***Report after work*** if the activity described has already occurred. As appropriate, include the date the activity is expected to start or the date the activity was completed. (Note this may not be available, e.g., for a plugging plan submitted with a permit application.)

TYPE OF ACTION: Check the appropriate box to describe the kind of activity being reported. Check ***Well Rework*** for work that was/will be performed on the well after it has already been in operation as an injection well. Check ***Plugging and Abandonment*** to report on plans for or descriptions of final closure/plugging after use as an injection well. Check ***Conversion to a Non-Injection Well*** if the well is to be converted to something other than an injection well.

Provide a **NARRATIVE DESCRIPTION** of the work planned to be performed, or that was performed. The narrative should include a description of the main procedures planned or that occurred during the work activity. A service company report, daily report, or similar document may be attached if it includes all the requested information and is clear and legible.

For well reworks, include the following information: The reason for the well rework; depths of activity; type of activity; changes to injection well configuration, well casing, or cement behind casing; any plug added to the well and its depth; any newly drilled interval and its depth; method(s) to demonstrate that the well has mechanical integrity (as applicable); and any deviations from the approved rework plan (as applicable).

For a well plugging plan, include the following information: Reason for the well plugging; number of plugs placed, and their depths; materials used as plugs (e.g., cast iron bridge plug, cement, cement retainer); method to set plugs; and wait-on-cement times, if any. Also provide one or more cost estimates from an independent firm in the business of plugging and abandoning wells to plug the well as described in the plan.

For well plugging affidavit, include the following information: Reason for the well plugging; number of plugs placed, and their depths; materials used as plugs (e.g., cast iron bridge plug, cement, cement retainer); method to set plugs; wait-on-cement times, if any; and any deviations from the approved plugging plan (if applicable).

For conversion to a non-injection well, include the following information: Depths of activity; type of activity; changes to injection well configuration, well casing, or cement behind casing; any plug added to the well and its depth; any newly drilled interval and its depth; depths of new perforations; and method(s) to demonstrate that the well has mechanical integrity (as applicable).

For all of the above activities, include a well sketch depicting the work, results of well tests/logging performed, service company tickets, and any other available information demonstrating how the work was/is to be performed. Also, specify whether depths are below ground surface, relative to Kelly bushing, etc.

CERTIFICATION: This form must be signed and dated by either: a responsible corporate officer for a corporation, by a general partner for a partnership, by the proprietor of a sole proprietorship, or by a principal executive or ranking elected official for a public agency.

PAPERWORK REDUCTION ACT NOTICE: The public reporting and recordkeeping burden for this collection of information is estimated to average between 6.0 and 7.9 hours per response, depending on the injection well class. Burden means the total time, effort, or financial resource expended by persons to generate, maintain, retain, or disclose or provide information to or for a Federal Agency. This includes the time needed to review instructions; develop, acquire, install, and utilize technology and systems for the purposes of collecting, validating, and verifying information, processing and maintaining information, and disclosing and providing information; adjust the existing ways to comply with any previously applicable instructions and requirements; train personnel to be able to respond to the collection of information; search data sources; complete and review the collection of information; and, transmit or otherwise disclose the information. An agency may not conduct or sponsor, and a person is not required to respond to, a collection of information unless it displays a currently valid OMB control number. Send comments on the Agency's need for this information, the accuracy of the provided burden estimates, and any suggested methods for minimizing respondent burden, including the use of automated collection techniques to Director, Collection Strategies Division, U.S. Environmental Protection Agency (2822), 1200 Pennsylvania Ave., NW., Washington, D.C. 20460. Include the OMB control number in any correspondence. Do not send the completed forms to this address.

PROPOSED DESIGN
TEST WELL DM-A

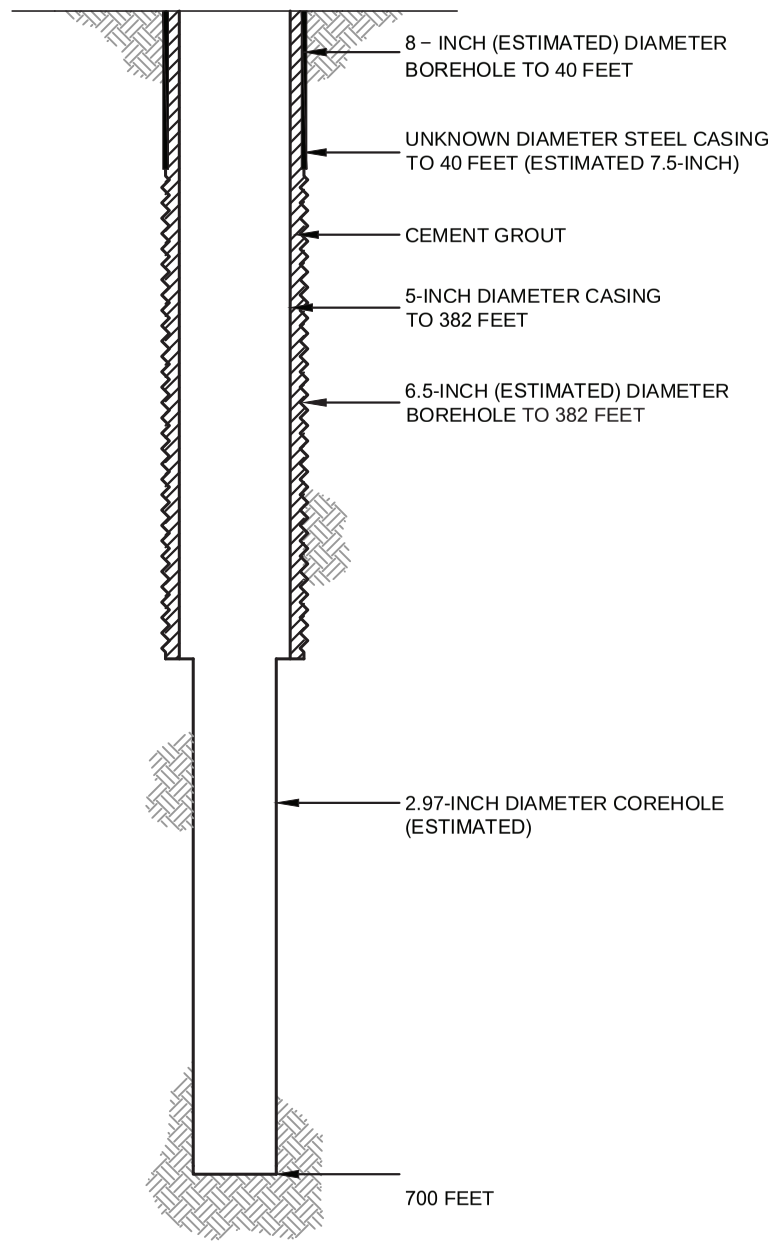

PROPOSED PLUGGING
AND ABANDONMENT
TEST WELL DM-A

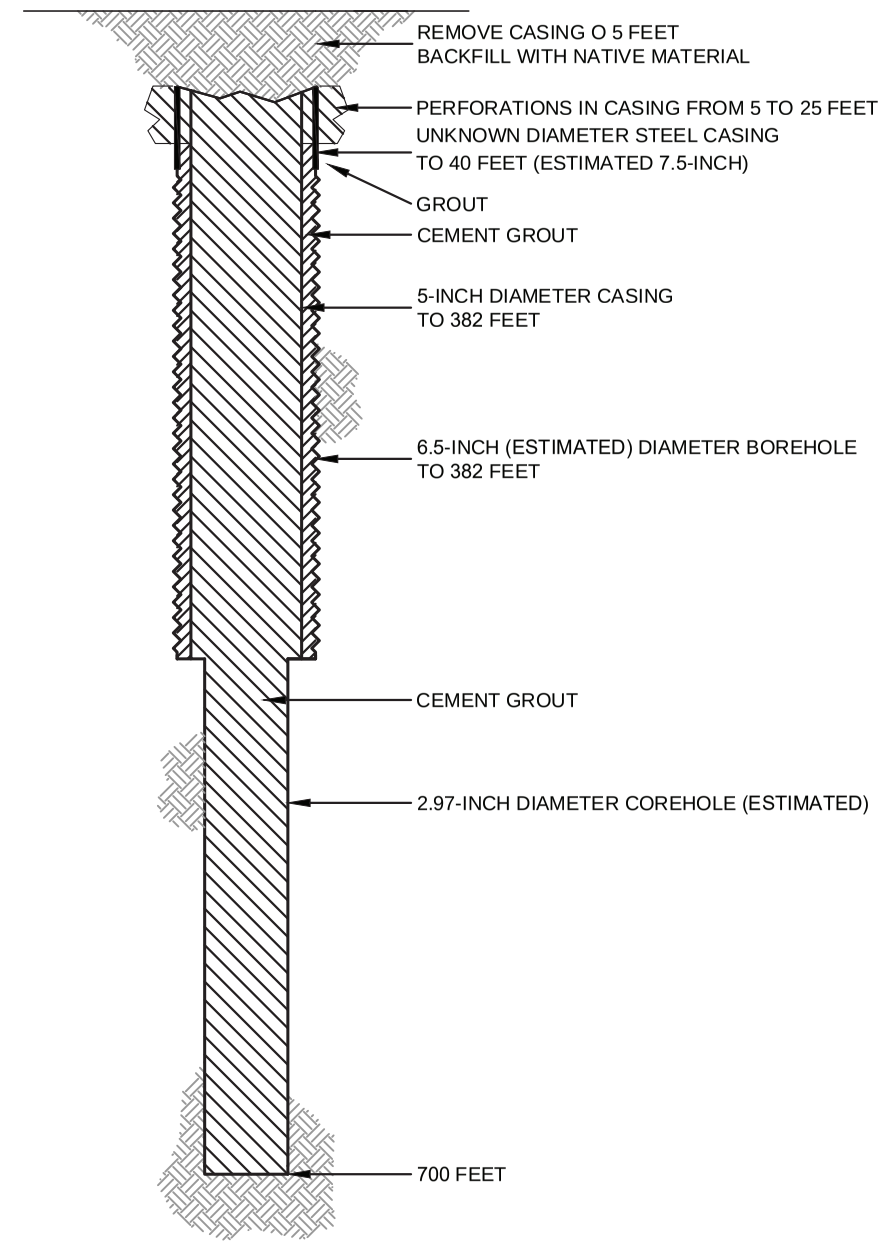

HALEY ALDRICH

FLORENCE COPPER, INC.
FLORENCE, ARIZONA

ABANDONMENT SCHEMATIC
TEST WELL DM-A

FLORENCE COPPER INC.

NOT TO SCALE
SEPTEMBER 2019

FIGURE 1

MOBINI, GITA Printed: 4/21/2017 12:00 PM Layout: ABANDON (2)
G:\PROJECTS\CURIS RESOURCES\38706-CURIS FEASIBILITY\DRAWINGS\EPA\WELL ABANDON\415S_ABANDON.DWG

OMB No. 2040-0042 Approval Expires 4/30/2022

United States Environmental Protection Agency

WELL REWORK RECORD, PLUGGING AND ABANDONMENT PLAN, OR PLUGGING AND ABANDONMENT AFFIDAVIT

Name and Address, Phone Number and/or Email of Permittee

Florence Copper Project
1575 W Hunt Hwy,
Florence, AZ 85132

Permit or EPA ID Number	API Number	Full Well Name
R9UIC-AZ3-FY11-1		DM-C

State	County
Arizona	Pinal

Locate well in two directions from nearest lines of quarter section and drilling unit

Latitude 33.05092827

Longitude -111.4265146

Surface Location

NW **1/4 of** SE **1/4 of Section** 28 **Township** 4S **Range** 9E

_____ **ft. from (N/S)** _____ **Line of quarter section**

_____ **ft. from (E/W)** _____ **Line of quarter section.**

Well Class	Timing of Action (pick one)	Type of Action (pick one)
☐ Class I ☐ Class II ☑ Class III ☐ Class V	☑ Notice Prior to Work Date Expected to Commence March 2021 ☐ Report After Work Date Work Ended	☐ Well Rework ☑ Plugging and Abandonment ☐ Conversion to a Non-Injection Well

Provide a narrative description of the work planned to be performed, or that was performed. Use additional pages as necessary. See instructions.

A workover rig capable of performing the required abandonment operations at the required depths will be moved in and set up over the well. The well casing will be inspected to determine the depth to which the well remains open and if any obstructions are present in the casing; the presence and condition of any existing surface casing will also be documented. If necessary, the well casing will be cleaned out to the planned clean-out depth to enable placement of cement seals.

If surface casing is present, an attempt will be made to remove it. If removal of the surface casing is not feasible, it will be left in the hole and perforated as needed to allow an annular seal to be placed to a depth of at least 25 feet bgs. In areas of agricultural use, the surface casing will be cut at least 5 feet bgs and removed.

If the surface casing cannot be removed, it will be perforated from at least 20 feet below the bedrock-LBFU contact to at least 20 feet above the contact; from at least 20 feet below the base of the MFGU to at least 20 feet above the top of the MFGU; and from at least 25 feet bgs to 5 feet bgs.

A tremie pipe will be used to place Type V cement in the open well from the bottom of the well casing to the top of the well casing. Cement retainers, as described above, will be used to force cement grout into the annulus and behind perforated screen intervals, as necessary.

If the well casing has been obstructed, as much cement as possible will be placed from 100 feet below the LBFU-bedrock contact to the top of the casing.

The volume of Type V cement will be recorded and will not be less than the estimated volume of material required to fill each interval. All cement grout will consist of Type V cement, or equivalent approved in accordance with the UIC Permit.

Certification

I certify under the penalty of law that I have personally examined and am familiar with the information submitted in this document and all attachments and that, based on my inquiry of those individuals immediately responsible for obtaining the information, I believe that the information is true, accurate, and complete. I am aware that there are significant penalties for submitting false information, including the possibliity of fine and imprisonment. (Ref. 40 CFR § 144.32)

Name and Official Title *(Please type or print)*	Signature	Date Signed
Dan Johnson, VP - General Manager		10/3/2019

INSTRUCTIONS FOR FORM 7520-19

This form replaces forms 7520-12 and 7520-14. Use this form only when work is planned or has occurred that affects the well's construction or operation as an injection well, including work on the casing, tubing or packer (or for shallow Class V wells, the subsurface fluid emplacement network). Use one form per injection well. While reports or other information developed by contractors or service companies may be attached, this form must be signed by a responsible entity as described at 40 CFR 144.32. Note: operators closing Class V wells should use Form 7520-17.

NAME, ADDRESS, PHONE AND/OR EMAIL OF PERMITTEE: Enter the name and street address, city/town, state, and ZIP code of the permittee. Also provide an email address (if available) and/or a phone number.

PERMIT OR EPA ID NUMBER: Enter the well identification number or permit number assigned to the well by the EPA or the permitting authority.

API NUMBER: Enter the number assigned by the local jurisdiction (usually a State Oil and Gas Agency) using the American Petroleum Institute standard numbering system.

FULL WELL NAME: Enter the full name of the well or project.

Enter the **STATE** and **COUNTY** where the well is located. For States that do not have counties, use the name of that State's equivalent jurisdiction at a more local level.

WELL LOCATION: Fill in the complete township, range, and section to the nearest quarter-quarter section. A township is north or south of the baseline, and a range is east or west of the principal meridian (e.g., T12N, R34W). Also include the distance, in feet, from the nearest north or south line and nearest east or west line of the quarter-section. Also, enter the **latitude** and **longitude** of the well in decimal degrees, to five or six places if possible; be sure to include a negative sign for the longitude of a well in the Western Hemisphere and a negative sign for the latitude of a well in the Southern Hemisphere.

Enter the **WELL CLASS,** i.e., the class of injection well as defined in 40 CFR 144.6.

TIMING OF THE ACTION: Check ***Notice prior to work*** if the activity has not yet occurred (i.e., is planned). Check ***Report after work*** if the activity described has already occurred. As appropriate, include the date the activity is expected to start or the date the activity was completed. (Note this may not be available, e.g., for a plugging plan submitted with a permit application.)

TYPE OF ACTION: Check the appropriate box to describe the kind of activity being reported. Check ***Well Rework*** for work that was/will be performed on the well after it has already been in operation as an injection well. Check ***Plugging and Abandonment*** to report on plans for or descriptions of final closure/plugging after use as an injection well. Check ***Conversion to a Non-Injection Well*** if the well is to be converted to something other than an injection well.

Provide a **NARRATIVE DESCRIPTION** of the work planned to be performed, or that was performed. The narrative should include a description of the main procedures planned or that occurred during the work activity. A service company report, daily report, or similar document may be attached if it includes all the requested information and is clear and legible.

For well reworks, include the following information: The reason for the well rework; depths of activity; type of activity; changes to injection well configuration, well casing, or cement behind casing; any plug added to the well and its depth; any newly drilled interval and its depth; method(s) to demonstrate that the well has mechanical integrity (as applicable); and any deviations from the approved rework plan (as applicable).

For a well plugging plan, include the following information: Reason for the well plugging; number of plugs placed, and their depths; materials used as plugs (e.g., cast iron bridge plug, cement, cement retainer); method to set plugs; and wait-on-cement times, if any. Also provide one or more cost estimates from an independent firm in the business of plugging and abandoning wells to plug the well as described in the plan.

For well plugging affidavit, include the following information: Reason for the well plugging; number of plugs placed, and their depths; materials used as plugs (e.g., cast iron bridge plug, cement, cement retainer); method to set plugs; wait-on-cement times, if any; and any deviations from the approved plugging plan (if applicable).

For conversion to a non-injection well, include the following information: Depths of activity; type of activity; changes to injection well configuration, well casing, or cement behind casing; any plug added to the well and its depth; any newly drilled interval and its depth; depths of new perforations; and method(s) to demonstrate that the well has mechanical integrity (as applicable).

For all of the above activities, include a well sketch depicting the work, results of well tests/logging performed, service company tickets, and any other available information demonstrating how the work was/is to be performed. Also, specify whether depths are below ground surface, relative to Kelly bushing, etc.

CERTIFICATION: This form must be signed and dated by either: a responsible corporate officer for a corporation, by a general partner for a partnership, by the proprietor of a sole proprietorship, or by a principal executive or ranking elected official for a public agency.

PAPERWORK REDUCTION ACT NOTICE: The public reporting and recordkeeping burden for this collection of information is estimated to average between 6.0 and 7.9 hours per response, depending on the injection well class. Burden means the total time, effort, or financial resource expended by persons to generate, maintain, retain, or disclose or provide information to or for a Federal Agency. This includes the time needed to review instructions; develop, acquire, install, and utilize technology and systems for the purposes of collecting, validating, and verifying information, processing and maintaining information, and disclosing and providing information; adjust the existing ways to comply with any previously applicable instructions and requirements; train personnel to be able to respond to the collection of information; search data sources; complete and review the collection of information; and, transmit or otherwise disclose the information. An agency may not conduct or sponsor, and a person is not required to respond to, a collection of information unless it displays a currently valid OMB control number. Send comments on the Agency's need for this information, the accuracy of the provided burden estimates, and any suggested methods for minimizing respondent burden, including the use of automated collection techniques to Director, Collection Strategies Division, U.S. Environmental Protection Agency (2822), 1200 Pennsylvania Ave., NW., Washington, D.C. 20460. Include the OMB control number in any correspondence. Do not send the completed forms to this address.

PROPOSED DESIGN
TEST WELL DM-C

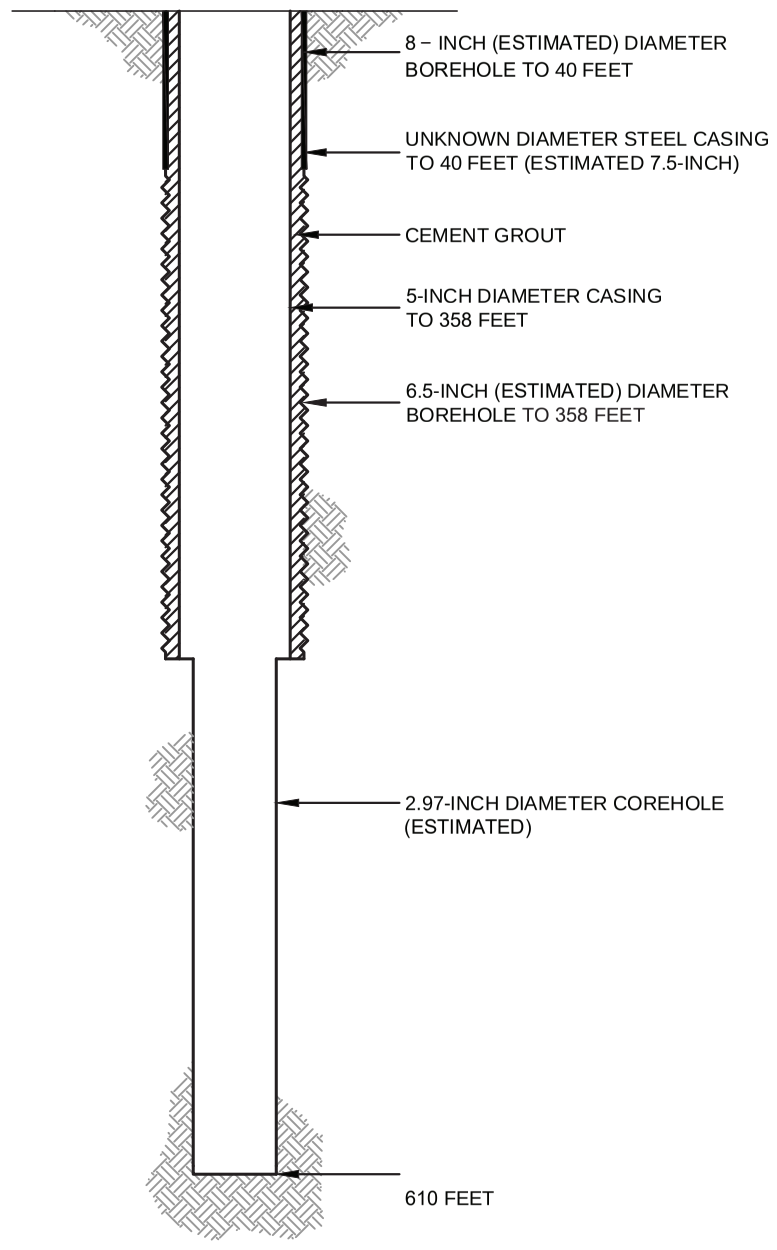

PROPOSED PLUGGING
AND ABANDONMENT
TEST WELL DM-C

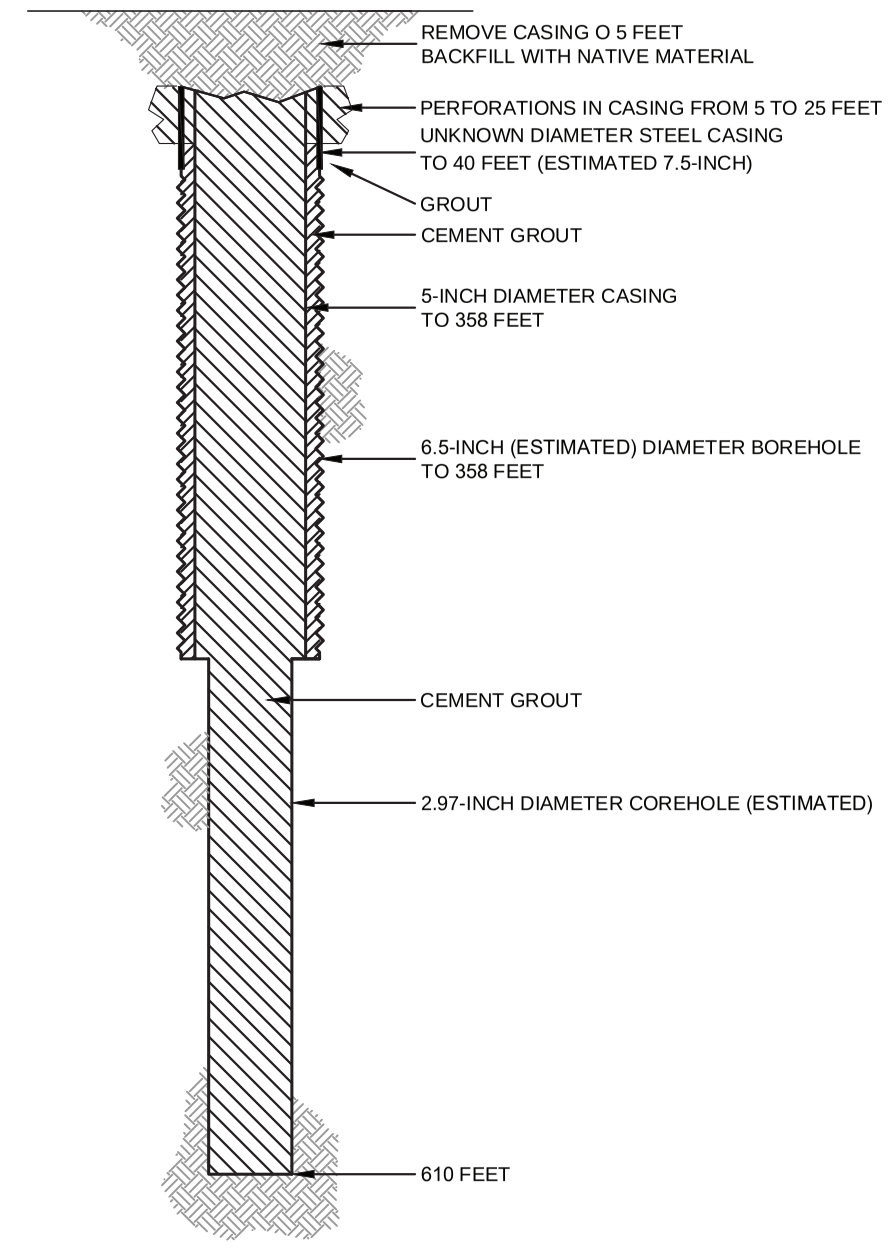

HALEY ALDRICH

FLORENCE COPPER, INC.
FLORENCE, ARIZONA

ABANDONMENT SCHEMATIC
TEST WELL DM-C

FLORENCE COPPER INC.

NOT TO SCALE
SEPTEMBER 2019

FIGURE 1

MOBINI, GITA Printed: 4/21/2017 12:00 PM Layout: ABANDON (2)
G:\PROJECTS\CURIS RESOURCES\38706-CURIS FEASIBILITY\DRAWINGS\EPA\WELL ABANDON\415S_ABANDON.DWG

OMB No. 2040-0042 Approval Expires 4/30/2022

United States Environmental Protection Agency

EPA

WELL REWORK RECORD, PLUGGING AND ABANDONMENT PLAN, OR PLUGGING AND ABANDONMENT AFFIDAVIT

Name and Address, Phone Number and/or Email of Permittee

Florence Copper Project
1575 W Hunt Hwy,
Florence, AZ 85132

Permit or EPA ID Number	API Number	Full Well Name
R9UIC-AZ3-FY11-1		DM-D

State	County
Arizona	Pinal

Locate well in two directions from nearest lines of quarter section and drilling unit

Latitude 33.05219116

Longitude -111.4279603

Surface Location

NW **1/4 of** SE **1/4 of Section** 28 **Township** 4S **Range** 9E

_____ **ft. from (N/S)** _____ **Line of quarter section**

_____ **ft. from (E/W)** _____ **Line of quarter section.**

Well Class	Timing of Action (pick one)	Type of Action (pick one)
☐ Class I ☐ Class II ☑ Class III ☐ Class V	☑ Notice Prior to Work Date Expected to Commence March 2021 ☐ Report After Work Date Work Ended	☐ Well Rework ☑ Plugging and Abandonment ☐ Conversion to a Non-Injection Well

Provide a narrative description of the work planned to be performed, or that was performed. Use additional pages as necessary. See instructions.

A workover rig capable of performing the required abandonment operations at the required depths will be moved in and set up over the well. The well casing will be inspected to determine the depth to which the well remains open and if any obstructions are present in the casing; the presence and condition of any existing surface casing will also be documented. If necessary, the well casing will be cleaned out to the planned clean-out depth to enable placement of cement seals.

If surface casing is present, an attempt will be made to remove it. If removal of the surface casing is not feasible, it will be left in the hole and perforated as needed to allow an annular seal to be placed to a depth of at least 25 feet bgs. In areas of agricultural use, the surface casing will be cut at least 5 feet bgs and removed.

If the surface casing cannot be removed, it will be perforated from at least 20 feet below the bedrock-LBFU contact to at least 20 feet above the contact; from at least 20 feet below the base of the MFGU to at least 20 feet above the top of the MFGU; and from at least 25 feet bgs to 5 feet bgs.

A tremie pipe will be used to place Type V cement in the open well from the bottom of the well casing to the top of the well casing. Cement retainers, as described above, will be used to force cement grout into the annulus and behind perforated screen intervals, as necessary.

If the well casing has been obstructed, as much cement as possible will be placed from 100 feet below the LBFU-bedrock contact to the top of the casing.

The volume of Type V cement will be recorded and will not be less than the estimated volume of material required to fill each interval. All cement grout will consist of Type V cement, or equivalent approved in accordance with the UIC Permit.

Certification

I certify under the penalty of law that I have personally examined and am familiar with the information submitted in this document and all attachments and that, based on my inquiry of those individuals immediately responsible for obtaining the information, I believe that the information is true, accurate, and complete. I am aware that there are significant penalties for submitting false information, including the possibliity of fine and imprisonment. (Ref. 40 CFR § 144.32)

Name and Official Title *(Please type or print)*	Signature	Date Signed
Dan Johnson, VP - General Manager		10/3/2019

INSTRUCTIONS FOR FORM 7520-19

This form replaces forms 7520-12 and 7520-14. Use this form only when work is planned or has occurred that affects the well's construction or operation as an injection well, including work on the casing, tubing or packer (or for shallow Class V wells, the subsurface fluid emplacement network). Use one form per injection well. While reports or other information developed by contractors or service companies may be attached, this form must be signed by a responsible entity as described at 40 CFR 144.32. Note: operators closing Class V wells should use Form 7520-17.

NAME, ADDRESS, PHONE AND/OR EMAIL OF PERMITTEE: Enter the name and street address, city/town, state, and ZIP code of the permittee. Also provide an email address (if available) and/or a phone number.

PERMIT OR EPA ID NUMBER: Enter the well identification number or permit number assigned to the well by the EPA or the permitting authority.

API NUMBER: Enter the number assigned by the local jurisdiction (usually a State Oil and Gas Agency) using the American Petroleum Institute standard numbering system.

FULL WELL NAME: Enter the full name of the well or project.

Enter the **STATE** and **COUNTY** where the well is located. For States that do not have counties, use the name of that State's equivalent jurisdiction at a more local level.

WELL LOCATION: Fill in the complete township, range, and section to the nearest quarter-quarter section. A township is north or south of the baseline, and a range is east or west of the principal meridian (e.g., T12N, R34W). Also include the distance, in feet, from the nearest north or south line and nearest east or west line of the quarter-section. Also, enter the **latitude** and **longitude** of the well in decimal degrees, to five or six places if possible; be sure to include a negative sign for the longitude of a well in the Western Hemisphere and a negative sign for the latitude of a well in the Southern Hemisphere.

Enter the **WELL CLASS,** i.e., the class of injection well as defined in 40 CFR 144.6.

TIMING OF THE ACTION: Check ***Notice prior to work*** if the activity has not yet occurred (i.e., is planned). Check ***Report after work*** if the activity described has already occurred. As appropriate, include the date the activity is expected to start or the date the activity was completed. (Note this may not be available, e.g., for a plugging plan submitted with a permit application.)

TYPE OF ACTION: Check the appropriate box to describe the kind of activity being reported. Check ***Well Rework*** for work that was/will be performed on the well after it has already been in operation as an injection well. Check ***Plugging and Abandonment*** to report on plans for or descriptions of final closure/plugging after use as an injection well. Check ***Conversion to a Non-Injection Well*** if the well is to be converted to something other than an injection well.

Provide a **NARRATIVE DESCRIPTION** of the work planned to be performed, or that was performed. The narrative should include a description of the main procedures planned or that occurred during the work activity. A service company report, daily report, or similar document may be attached if it includes all the requested information and is clear and legible.

For well reworks, include the following information: The reason for the well rework; depths of activity; type of activity; changes to injection well configuration, well casing, or cement behind casing; any plug added to the well and its depth; any newly drilled interval and its depth; method(s) to demonstrate that the well has mechanical integrity (as applicable); and any deviations from the approved rework plan (as applicable).

For a well plugging plan, include the following information: Reason for the well plugging; number of plugs placed, and their depths; materials used as plugs (e.g., cast iron bridge plug, cement, cement retainer); method to set plugs; and wait-on-cement times, if any. Also provide one or more cost estimates from an independent firm in the business of plugging and abandoning wells to plug the well as described in the plan.

For well plugging affidavit, include the following information: Reason for the well plugging; number of plugs placed, and their depths; materials used as plugs (e.g., cast iron bridge plug, cement, cement retainer); method to set plugs; wait-on-cement times, if any; and any deviations from the approved plugging plan (if applicable).

For conversion to a non-injection well, include the following information: Depths of activity; type of activity; changes to injection well configuration, well casing, or cement behind casing; any plug added to the well and its depth; any newly drilled interval and its depth; depths of new perforations; and method(s) to demonstrate that the well has mechanical integrity (as applicable).

For all of the above activities, include a well sketch depicting the work, results of well tests/logging performed, service company tickets, and any other available information demonstrating how the work was/is to be performed. Also, specify whether depths are below ground surface, relative to Kelly bushing, etc.

CERTIFICATION: This form must be signed and dated by either: a responsible corporate officer for a corporation, by a general partner for a partnership, by the proprietor of a sole proprietorship, or by a principal executive or ranking elected official for a public agency.

PAPERWORK REDUCTION ACT NOTICE: The public reporting and recordkeeping burden for this collection of information is estimated to average between 6.0 and 7.9 hours per response, depending on the injection well class. Burden means the total time, effort, or financial resource expended by persons to generate, maintain, retain, or disclose or provide information to or for a Federal Agency. This includes the time needed to review instructions; develop, acquire, install, and utilize technology and systems for the purposes of collecting, validating, and verifying information, processing and maintaining information, and disclosing and providing information; adjust the existing ways to comply with any previously applicable instructions and requirements; train personnel to be able to respond to the collection of information; search data sources; complete and review the collection of information; and, transmit or otherwise disclose the information. An agency may not conduct or sponsor, and a person is not required to respond to, a collection of information unless it displays a currently valid OMB control number. Send comments on the Agency's need for this information, the accuracy of the provided burden estimates, and any suggested methods for minimizing respondent burden, including the use of automated collection techniques to Director, Collection Strategies Division, U.S. Environmental Protection Agency (2822), 1200 Pennsylvania Ave., NW., Washington, D.C. 20460. Include the OMB control number in any correspondence. Do not send the completed forms to this address.

PROPOSED DESIGN
TEST WELL DM-D

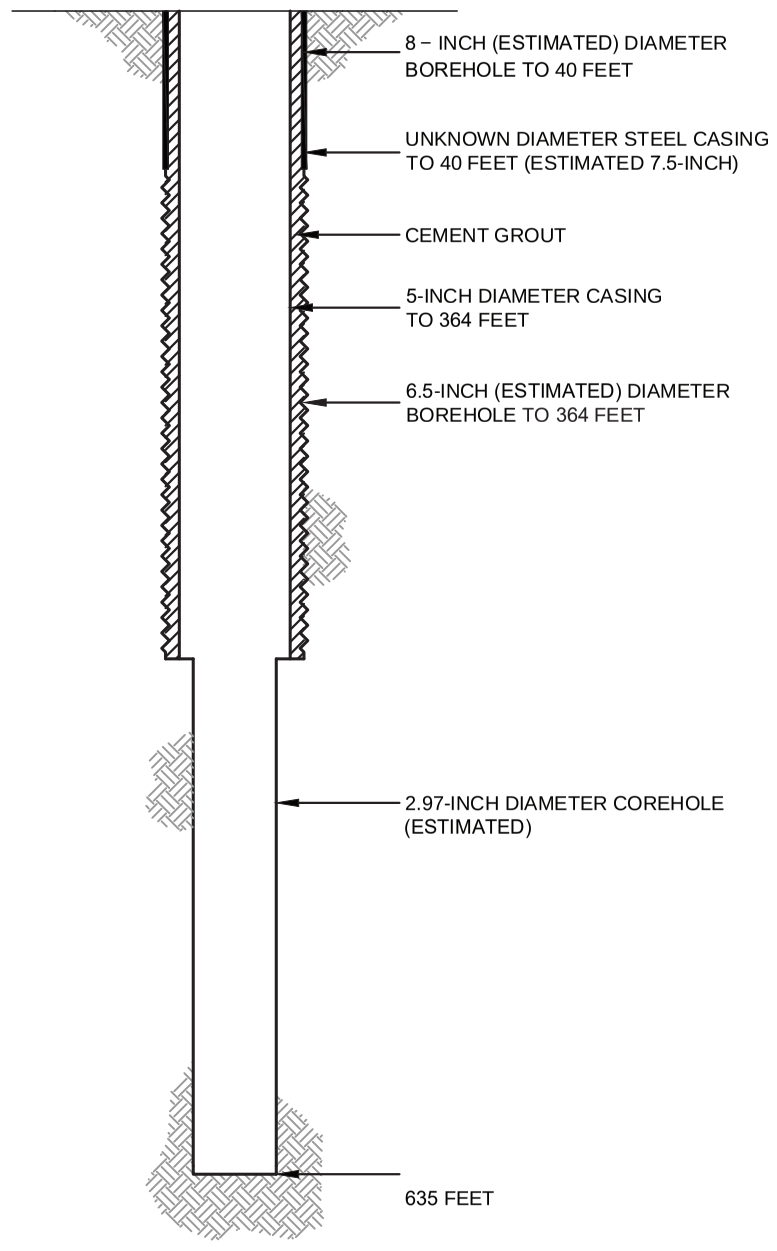

PROPOSED PLUGGING
AND ABANDONMENT
TEST WELL DM-D

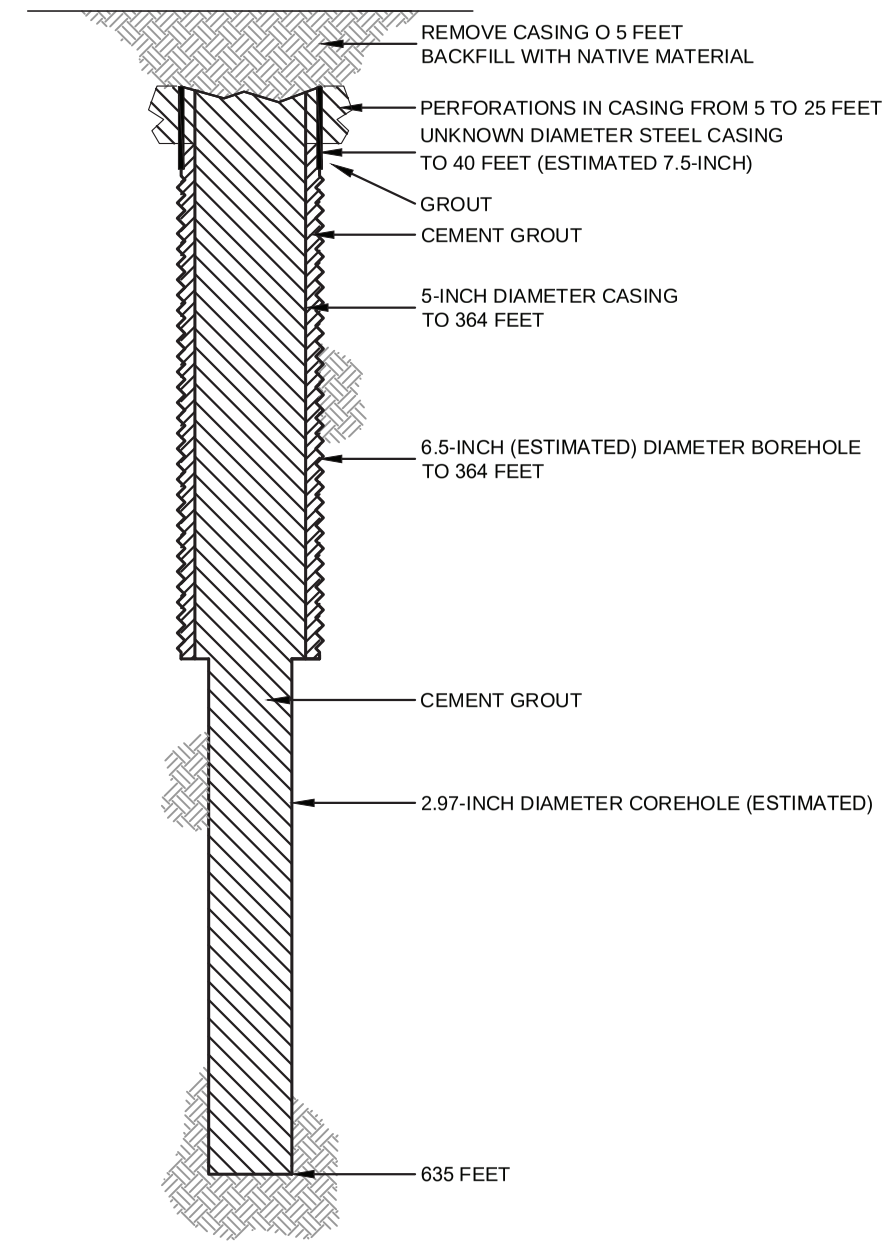

HALEY ALDRICH

FLORENCE COPPER, INC.
FLORENCE, ARIZONA

ABANDONMENT SCHEMATIC
TEST WELL DM-D

FLORENCE COPPER INC.

NOT TO SCALE
SEPTEMBER 2019

FIGURE 1

MOBINI, GITA Printed: 4/21/2017 12:00 PM Layout: ABANDON (2)
G:\PROJECTS\CURIS RESOURCES\38706-CURIS FEASIBILITY\DRAWINGS\EPA\WELL ABANDON\415S_ABANDON.DWG

OMB No. 2040-0042 Approval Expires 4/30/2022

United States Environmental Protection Agency

EPA

WELL REWORK RECORD, PLUGGING AND ABANDONMENT PLAN, OR PLUGGING AND ABANDONMENT AFFIDAVIT

Name and Address, Phone Number and/or Email of Permittee

Florence Copper Project
1575 W Hunt Hwy,
Florence, AZ 85132

Permit or EPA ID Number	API Number	Full Well Name
R9UIC-AZ3-FY11-1		DM-E

State	County
Arizona	Pinal

Locate well in two directions from nearest lines of quarter section and drilling unit

Latitude 33.04853319

Surface Location

SE **1/4 of** SE **1/4 of Section** 28 **Township** 4S **Range** 9E

Longitude -111.4247131

_____ **ft. from (N/S)** _____ **Line of quarter section**

_____ **ft. from (E/W)** _____ **Line of quarter section.**

Well Class	Timing of Action (pick one)	Type of Action (pick one)
☐ Class I ☐ Class II ☑ Class III ☐ Class V	☑ Notice Prior to Work Date Expected to Commence March 2021 ☐ Report After Work Date Work Ended	☐ Well Rework ☑ Plugging and Abandonment ☐ Conversion to a Non-Injection Well

Provide a narrative description of the work planned to be performed, or that was performed. Use additional pages as necessary. See instructions.

A workover rig capable of performing the required abandonment operations at the required depths will be moved in and set up over the well. The well casing will be inspected to determine the depth to which the well remains open and if any obstructions are present in the casing; the presence and condition of any existing surface casing will also be documented. If necessary, the well casing will be cleaned out to the planned clean-out depth to enable placement of cement seals.

If surface casing is present, an attempt will be made to remove it. If removal of the surface casing is not feasible, it will be left in the hole and perforated as needed to allow an annular seal to be placed to a depth of at least 25 feet bgs. In areas of agricultural use, the surface casing will be cut at least 5 feet bgs and removed.

If the surface casing cannot be removed, it will be perforated from at least 20 feet below the bedrock-LBFU contact to at least 20 feet above the contact; from at least 20 feet below the base of the MFGU to at least 20 feet above the top of the MFGU; and from at least 25 feet bgs to 5 feet bgs.

A tremie pipe will be used to place Type V cement in the open well from the bottom of the well casing to the top of the well casing. Cement retainers, as described above, will be used to force cement grout into the annulus and behind perforated screen intervals, as necessary.

If the well casing has been obstructed, as much cement as possible will be placed from 100 feet below the LBFU-bedrock contact to the top of the casing.

The volume of Type V cement will be recorded and will not be less than the estimated volume of material required to fill each interval. All cement grout will consist of Type V cement, or equivalent approved in accordance with the UIC Permit.

Certification

I certify under the penalty of law that I have personally examined and am familiar with the information submitted in this document and all attachments and that, based on my inquiry of those individuals immediately responsible for obtaining the information, I believe that the information is true, accurate, and complete. I am aware that there are significant penalties for submitting false information, including the possibliity of fine and imprisonment. (Ref. 40 CFR § 144.32)

Name and Official Title *(Please type or print)*	Signature	Date Signed
Dan Johnson, VP - General Manager		10/3/2019

INSTRUCTIONS FOR FORM 7520-19

This form replaces forms 7520-12 and 7520-14. Use this form only when work is planned or has occurred that affects the well's construction or operation as an injection well, including work on the casing, tubing or packer (or for shallow Class V wells, the subsurface fluid emplacement network). Use one form per injection well. While reports or other information developed by contractors or service companies may be attached, this form must be signed by a responsible entity as described at 40 CFR 144.32. Note: operators closing Class V wells should use Form 7520-17.

NAME, ADDRESS, PHONE AND/OR EMAIL OF PERMITTEE: Enter the name and street address, city/town, state, and ZIP code of the permittee. Also provide an email address (if available) and/or a phone number.

PERMIT OR EPA ID NUMBER: Enter the well identification number or permit number assigned to the well by the EPA or the permitting authority.

API NUMBER: Enter the number assigned by the local jurisdiction (usually a State Oil and Gas Agency) using the American Petroleum Institute standard numbering system.

FULL WELL NAME: Enter the full name of the well or project.

Enter the **STATE** and **COUNTY** where the well is located. For States that do not have counties, use the name of that State's equivalent jurisdiction at a more local level.

WELL LOCATION: Fill in the complete township, range, and section to the nearest quarter-quarter section. A township is north or south of the baseline, and a range is east or west of the principal meridian (e.g., T12N, R34W). Also include the distance, in feet, from the nearest north or south line and nearest east or west line of the quarter-section. Also, enter the **latitude** and **longitude** of the well in decimal degrees, to five or six places if possible; be sure to include a negative sign for the longitude of a well in the Western Hemisphere and a negative sign for the latitude of a well in the Southern Hemisphere.

Enter the **WELL CLASS,** i.e., the class of injection well as defined in 40 CFR 144.6.

TIMING OF THE ACTION: Check ***Notice prior to work*** if the activity has not yet occurred (i.e., is planned). Check ***Report after work*** if the activity described has already occurred. As appropriate, include the date the activity is expected to start or the date the activity was completed. (Note this may not be available, e.g., for a plugging plan submitted with a permit application.)

TYPE OF ACTION: Check the appropriate box to describe the kind of activity being reported. Check ***Well Rework*** for work that was/will be performed on the well after it has already been in operation as an injection well. Check ***Plugging and Abandonment*** to report on plans for or descriptions of final closure/plugging after use as an injection well. Check ***Conversion to a Non-Injection Well*** if the well is to be converted to something other than an injection well.

Provide a **NARRATIVE DESCRIPTION** of the work planned to be performed, or that was performed. The narrative should include a description of the main procedures planned or that occurred during the work activity. A service company report, daily report, or similar document may be attached if it includes all the requested information and is clear and legible.

For well reworks, include the following information: The reason for the well rework; depths of activity; type of activity; changes to injection well configuration, well casing, or cement behind casing; any plug added to the well and its depth; any newly drilled interval and its depth; method(s) to demonstrate that the well has mechanical integrity (as applicable); and any deviations from the approved rework plan (as applicable).

For a well plugging plan, include the following information: Reason for the well plugging; number of plugs placed, and their depths; materials used as plugs (e.g., cast iron bridge plug, cement, cement retainer); method to set plugs; and wait-on-cement times, if any. Also provide one or more cost estimates from an independent firm in the business of plugging and abandoning wells to plug the well as described in the plan.

For well plugging affidavit, include the following information: Reason for the well plugging; number of plugs placed, and their depths; materials used as plugs (e.g., cast iron bridge plug, cement, cement retainer); method to set plugs; wait-on-cement times, if any; and any deviations from the approved plugging plan (if applicable).

For conversion to a non-injection well, include the following information: Depths of activity; type of activity; changes to injection well configuration, well casing, or cement behind casing; any plug added to the well and its depth; any newly drilled interval and its depth; depths of new perforations; and method(s) to demonstrate that the well has mechanical integrity (as applicable).

For all of the above activities, include a well sketch depicting the work, results of well tests/logging performed, service company tickets, and any other available information demonstrating how the work was/is to be performed. Also, specify whether depths are below ground surface, relative to Kelly bushing, etc.

CERTIFICATION: This form must be signed and dated by either: a responsible corporate officer for a corporation, by a general partner for a partnership, by the proprietor of a sole proprietorship, or by a principal executive or ranking elected official for a public agency.

PAPERWORK REDUCTION ACT NOTICE: The public reporting and recordkeeping burden for this collection of information is estimated to average between 6.0 and 7.9 hours per response, depending on the injection well class. Burden means the total time, effort, or financial resource expended by persons to generate, maintain, retain, or disclose or provide information to or for a Federal Agency. This includes the time needed to review instructions; develop, acquire, install, and utilize technology and systems for the purposes of collecting, validating, and verifying information, processing and maintaining information, and disclosing and providing information; adjust the existing ways to comply with any previously applicable instructions and requirements; train personnel to be able to respond to the collection of information; search data sources; complete and review the collection of information; and, transmit or otherwise disclose the information. An agency may not conduct or sponsor, and a person is not required to respond to, a collection of information unless it displays a currently valid OMB control number. Send comments on the Agency's need for this information, the accuracy of the provided burden estimates, and any suggested methods for minimizing respondent burden, including the use of automated collection techniques to Director, Collection Strategies Division, U.S. Environmental Protection Agency (2822), 1200 Pennsylvania Ave., NW., Washington, D.C. 20460. Include the OMB control number in any correspondence. Do not send the completed forms to this address.

PROPOSED DESIGN
TEST WELL DM-E

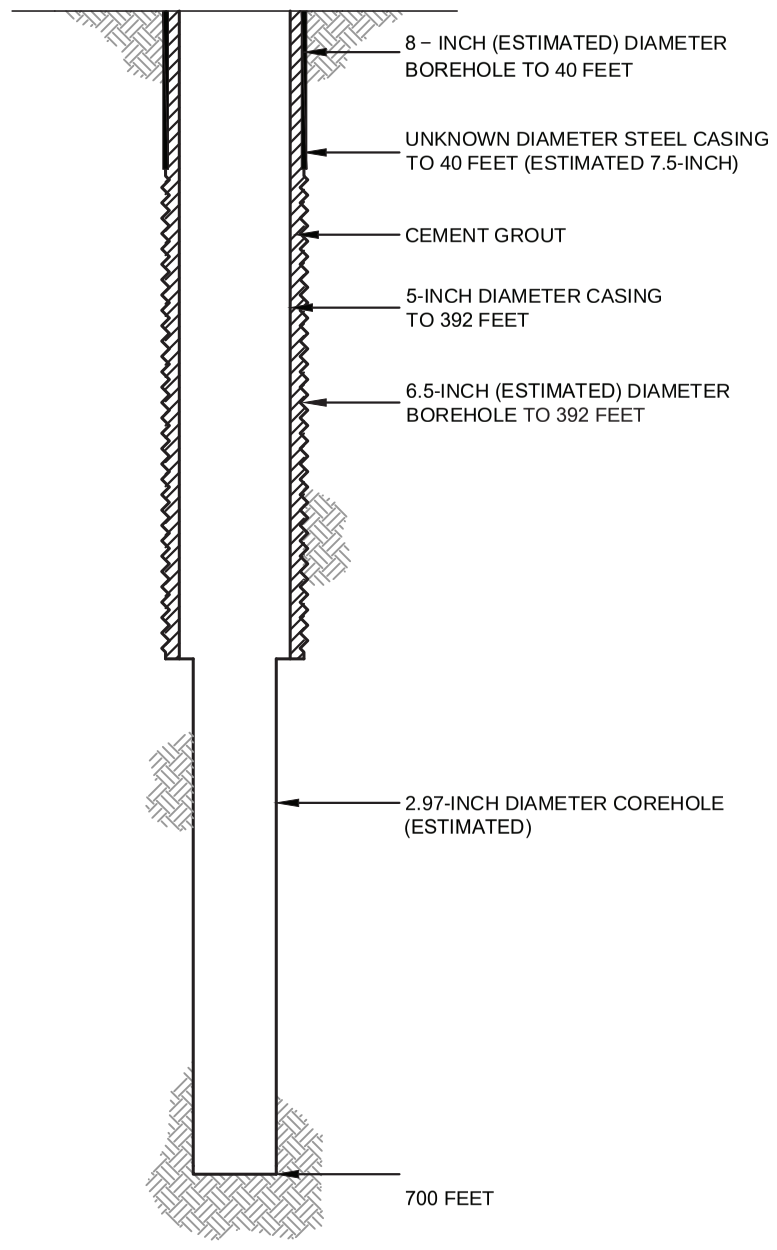

PROPOSED PLUGGING
AND ABANDONMENT
TEST WELL DM-E

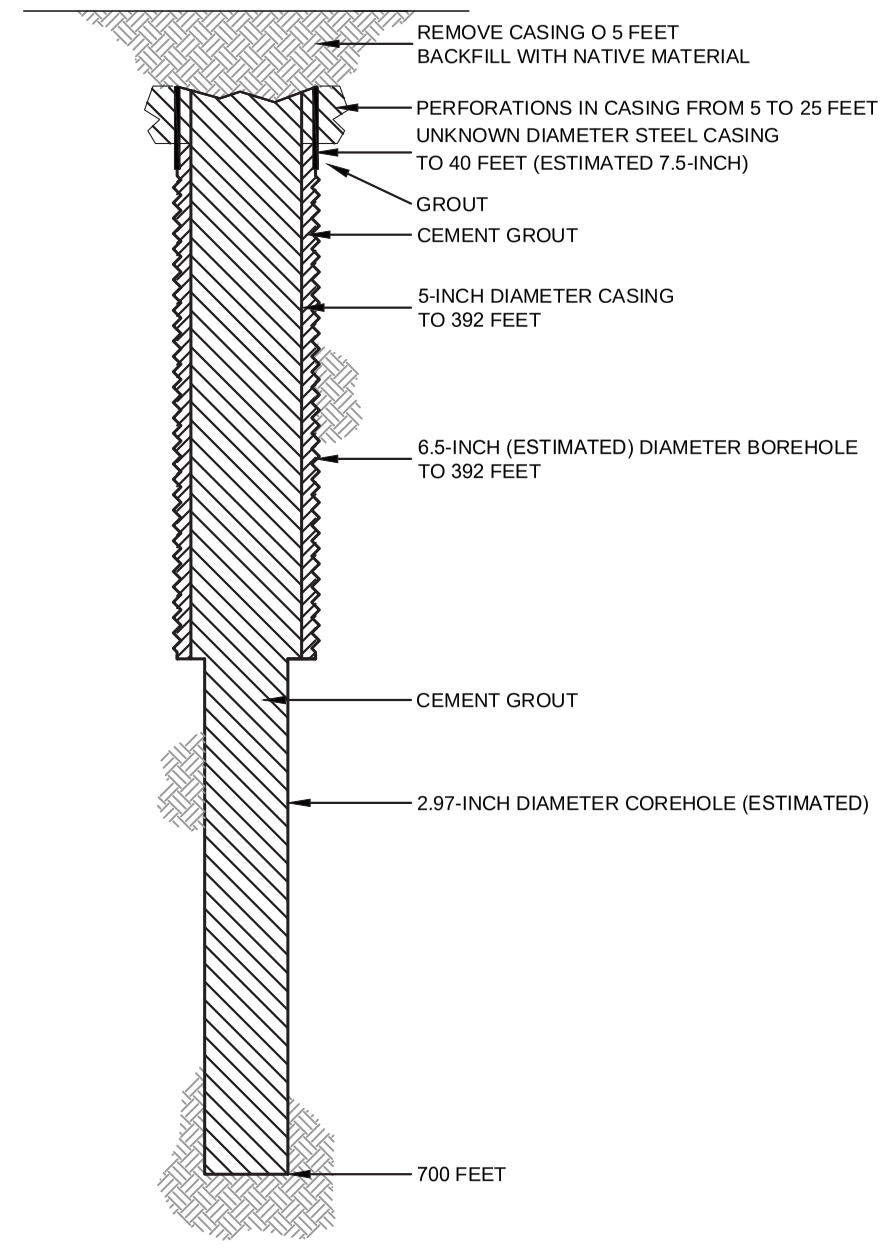

HALEY ALDRICH

FLORENCE COPPER, INC.
FLORENCE, ARIZONA

ABANDONMENT SCHEMATIC
TEST WELL DM-E

FLORENCE COPPER INC.

NOT TO SCALE
SEPTEMBER 2019

FIGURE 1

MOBINI, GITA Printed: 4/21/2017 12:00 PM Layout: ABANDON (2)
G:\PROJECTS\CURIS RESOURCES\38706-CURIS FEASIBILITY\DRAWINGS\EPA\WELL ABANDON\415S_ABANDON.DWG

OMB No. 2040-0042 Approval Expires 4/30/2022

United States Environmental Protection Agency

WELL REWORK RECORD, PLUGGING AND ABANDONMENT PLAN, OR PLUGGING AND ABANDONMENT AFFIDAVIT

Name and Address, Phone Number and/or Email of Permittee

Florence Copper Project
1575 W Hunt Hwy,
Florence, AZ 85132

Permit or EPA ID Number	API Number	Full Well Name
R9UIC-AZ3-FY11-1		M1-GL

State	County
Arizona	Pinal

Locate well in two directions from nearest lines of quarter section and drilling unit

Latitude 33.0438472

Surface Location

NE **1/4 of** NW **1/4 of Section** 33 **Township** 4S **Range** 9E

Longitude -111.432049

_____ **ft. from (N/S)** _____ **Line of quarter section**

_____ **ft. from (E/W)** _____ **Line of quarter section.**

Well Class	Timing of Action (pick one)	Type of Action (pick one)
☐ Class I ☐ Class II ☑ Class III ☐ Class V	☑ Notice Prior to Work Date Expected to Commence March 2021 ☐ Report After Work Date Work Ended	☐ Well Rework ☑ Plugging and Abandonment ☐ Conversion to a Non-Injection Well

Provide a narrative description of the work planned to be performed, or that was performed. Use additional pages as necessary. See instructions.

A workover rig capable of performing the required abandonment operations at the required depths will be moved in and set up over the well. The well casing will be inspected to determine the depth to which the well remains open and if any obstructions are present in the casing; the presence and condition of any existing surface casing will also be documented. If necessary, the well casing will be cleaned out to the planned clean-out depth to enable placement of cement seals.

If surface casing is present, an attempt will be made to remove it. If removal of the surface casing is not feasible, it will be left in the hole and perforated as needed to allow an annular seal to be placed to a depth of at least 25 feet bgs. In areas of agricultural use, the surface casing will be cut at least 5 feet bgs and removed.

If the surface casing cannot be removed, it will be perforated from at least 20 feet below the bedrock-LBFU contact to at least 20 feet above the contact; from at least 20 feet below the base of the MFGU to at least 20 feet above the top of the MFGU; and from at least 25 feet bgs to 5 feet bgs.

A tremie pipe will be used to place Type V cement in the open well from the bottom of the well casing to the top of the well casing. Cement retainers, as described above, will be used to force cement grout into the annulus and behind perforated screen intervals, as necessary.

If the well casing has been obstructed, as much cement as possible will be placed from 100 feet below the LBFU-bedrock contact to the top of the casing.

The volume of Type V cement will be recorded and will not be less than the estimated volume of material required to fill each interval. All cement grout will consist of Type V cement, or equivalent approved in accordance with the UIC Permit.

Certification

I certify under the penalty of law that I have personally examined and am familiar with the information submitted in this document and all attachments and that, based on my inquiry of those individuals immediately responsible for obtaining the information, I believe that the information is true, accurate, and complete. I am aware that there are significant penalties for submitting false information, including the possibliity of fine and imprisonment. (Ref. 40 CFR § 144.32)

Name and Official Title *(Please type or print)*	Signature	Date Signed
Dan Johnson, VP - General Manager		10/3/2019

INSTRUCTIONS FOR FORM 7520-19

This form replaces forms 7520-12 and 7520-14. Use this form only when work is planned or has occurred that affects the well's construction or operation as an injection well, including work on the casing, tubing or packer (or for shallow Class V wells, the subsurface fluid emplacement network). Use one form per injection well. While reports or other information developed by contractors or service companies may be attached, this form must be signed by a responsible entity as described at 40 CFR 144.32. Note: operators closing Class V wells should use Form 7520-17.

NAME, ADDRESS, PHONE AND/OR EMAIL OF PERMITTEE: Enter the name and street address, city/town, state, and ZIP code of the permittee. Also provide an email address (if available) and/or a phone number.

PERMIT OR EPA ID NUMBER: Enter the well identification number or permit number assigned to the well by the EPA or the permitting authority.

API NUMBER: Enter the number assigned by the local jurisdiction (usually a State Oil and Gas Agency) using the American Petroleum Institute standard numbering system.

FULL WELL NAME: Enter the full name of the well or project.

Enter the **STATE** and **COUNTY** where the well is located. For States that do not have counties, use the name of that State's equivalent jurisdiction at a more local level.

WELL LOCATION: Fill in the complete township, range, and section to the nearest quarter-quarter section. A township is north or south of the baseline, and a range is east or west of the principal meridian (e.g., T12N, R34W). Also include the distance, in feet, from the nearest north or south line and nearest east or west line of the quarter-section. Also, enter the **latitude** and **longitude** of the well in decimal degrees, to five or six places if possible; be sure to include a negative sign for the longitude of a well in the Western Hemisphere and a negative sign for the latitude of a well in the Southern Hemisphere.

Enter the **WELL CLASS,** i.e., the class of injection well as defined in 40 CFR 144.6.

TIMING OF THE ACTION: Check ***Notice prior to work*** if the activity has not yet occurred (i.e., is planned). Check ***Report after work*** if the activity described has already occurred. As appropriate, include the date the activity is expected to start or the date the activity was completed. (Note this may not be available, e.g., for a plugging plan submitted with a permit application.)

TYPE OF ACTION: Check the appropriate box to describe the kind of activity being reported. Check ***Well Rework*** for work that was/will be performed on the well after it has already been in operation as an injection well. Check ***Plugging and Abandonment*** to report on plans for or descriptions of final closure/plugging after use as an injection well. Check ***Conversion to a Non-Injection Well*** if the well is to be converted to something other than an injection well.

Provide a **NARRATIVE DESCRIPTION** of the work planned to be performed, or that was performed. The narrative should include a description of the main procedures planned or that occurred during the work activity. A service company report, daily report, or similar document may be attached if it includes all the requested information and is clear and legible.

For well reworks, include the following information: The reason for the well rework; depths of activity; type of activity; changes to injection well configuration, well casing, or cement behind casing; any plug added to the well and its depth; any newly drilled interval and its depth; method(s) to demonstrate that the well has mechanical integrity (as applicable); and any deviations from the approved rework plan (as applicable).

For a well plugging plan, include the following information: Reason for the well plugging; number of plugs placed, and their depths; materials used as plugs (e.g., cast iron bridge plug, cement, cement retainer); method to set plugs; and wait-on-cement times, if any. Also provide one or more cost estimates from an independent firm in the business of plugging and abandoning wells to plug the well as described in the plan.

For well plugging affidavit, include the following information: Reason for the well plugging; number of plugs placed, and their depths; materials used as plugs (e.g., cast iron bridge plug, cement, cement retainer); method to set plugs; wait-on-cement times, if any; and any deviations from the approved plugging plan (if applicable).

For conversion to a non-injection well, include the following information: Depths of activity; type of activity; changes to injection well configuration, well casing, or cement behind casing; any plug added to the well and its depth; any newly drilled interval and its depth; depths of new perforations; and method(s) to demonstrate that the well has mechanical integrity (as applicable).

For all of the above activities, include a well sketch depicting the work, results of well tests/logging performed, service company tickets, and any other available information demonstrating how the work was/is to be performed. Also, specify whether depths are below ground surface, relative to Kelly bushing, etc.

CERTIFICATION: This form must be signed and dated by either: a responsible corporate officer for a corporation, by a general partner for a partnership, by the proprietor of a sole proprietorship, or by a principal executive or ranking elected official for a public agency.

PAPERWORK REDUCTION ACT NOTICE: The public reporting and recordkeeping burden for this collection of information is estimated to average between 6.0 and 7.9 hours per response, depending on the injection well class. Burden means the total time, effort, or financial resource expended by persons to generate, maintain, retain, or disclose or provide information to or for a Federal Agency. This includes the time needed to review instructions; develop, acquire, install, and utilize technology and systems for the purposes of collecting, validating, and verifying information, processing and maintaining information, and disclosing and providing information; adjust the existing ways to comply with any previously applicable instructions and requirements; train personnel to be able to respond to the collection of information; search data sources; complete and review the collection of information; and, transmit or otherwise disclose the information. An agency may not conduct or sponsor, and a person is not required to respond to, a collection of information unless it displays a currently valid OMB control number. Send comments on the Agency's need for this information, the accuracy of the provided burden estimates, and any suggested methods for minimizing respondent burden, including the use of automated collection techniques to Director, Collection Strategies Division, U.S. Environmental Protection Agency (2822), 1200 Pennsylvania Ave., NW., Washington, D.C. 20460. Include the OMB control number in any correspondence. Do not send the completed forms to this address.

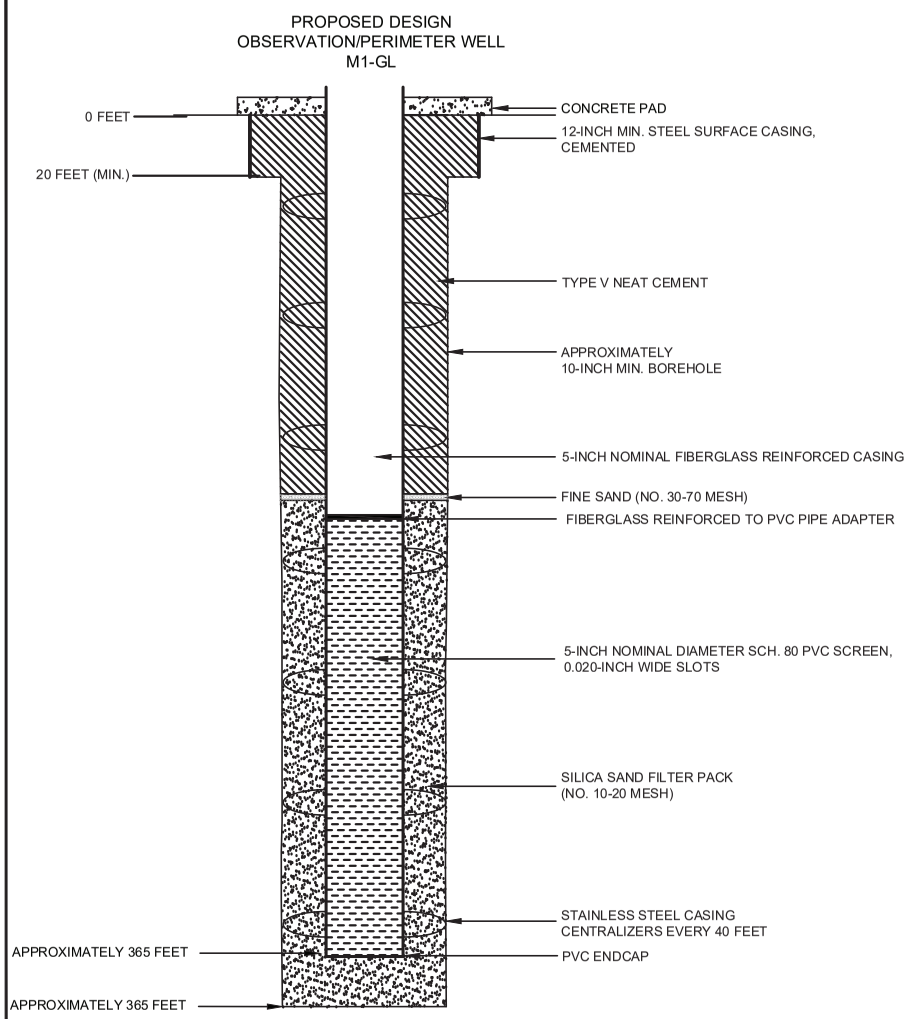

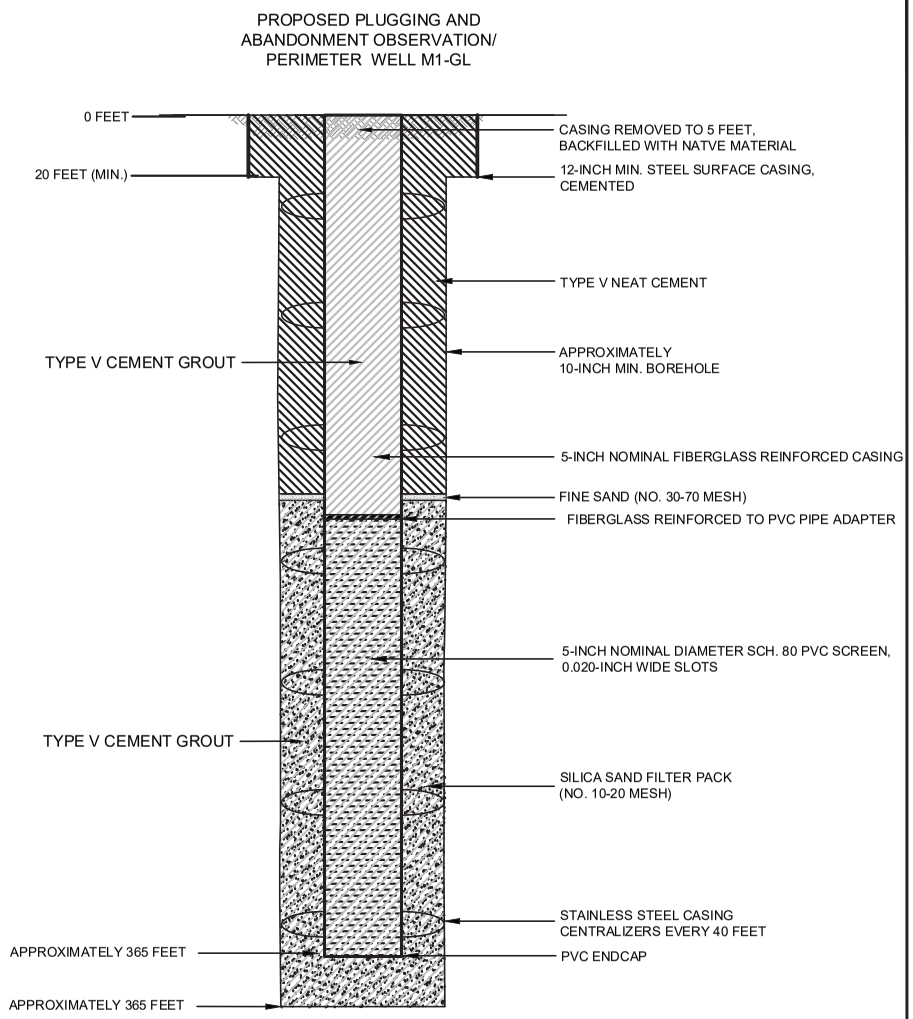

NOTES

1. WELL DESIGN DETAILS ARE BASED ON CORE HOLE AND WELL LOG RECORDS.

HALEY ALDRICH

FLORENCE COPPER, INC.
FLORENCE, ARIZONA

ABANDONMENT SCHEMATIC
OBSERVATION/PERIMETER
WELL M1-GL

SEPTEMBER 2019
SCALE: AS SHOWN

FIGURE 1

OMB No. 2040-0042 Approval Expires 4/30/2022

United States Environmental Protection Agency

WELL REWORK RECORD, PLUGGING AND ABANDONMENT PLAN, OR PLUGGING AND ABANDONMENT AFFIDAVIT

Name and Address, Phone Number and/or Email of Permittee

Florence Copper Project
1575 W Hunt Hwy,
Florence, AZ 85132

Permit or EPA ID Number	API Number	Full Well Name
R9UIC-AZ3-FY11-1		M2-GU

State	County
Arizona	Pinal

Locate well in two directions from nearest lines of quarter section and drilling unit

Latitude 33.04363387

Surface Location

NE **1/4 of** NE **1/4 of Section** 33 **Township** 4S **Range** 9E

Longitude -111.4217481

_____ **ft. from (N/S)** _____ **Line of quarter section**

_____ **ft. from (E/W)** _____ **Line of quarter section.**

Well Class	Timing of Action (pick one)	Type of Action (pick one)
☐ Class I ☐ Class II ☑ Class III ☐ Class V	☑ Notice Prior to Work Date Expected to Commence March 2021 ☐ Report After Work Date Work Ended	☐ Well Rework ☑ Plugging and Abandonment ☐ Conversion to a Non-Injection Well

Provide a narrative description of the work planned to be performed, or that was performed. Use additional pages as necessary. See instructions.

A workover rig capable of performing the required abandonment operations at the required depths will be moved in and set up over the well. The well casing will be inspected to determine the depth to which the well remains open and if any obstructions are present in the casing; the presence and condition of any existing surface casing will also be documented. If necessary, the well casing will be cleaned out to the planned clean-out depth to enable placement of cement seals.

If surface casing is present, an attempt will be made to remove it. If removal of the surface casing is not feasible, it will be left in the hole and perforated as needed to allow an annular seal to be placed to a depth of at least 25 feet bgs. In areas of agricultural use, the surface casing will be cut at least 5 feet bgs and removed.

If the surface casing cannot be removed, it will be perforated from at least 20 feet below the bedrock-LBFU contact to at least 20 feet above the contact; from at least 20 feet below the base of the MFGU to at least 20 feet above the top of the MFGU; and from at least 25 feet bgs to 5 feet bgs.

A tremie pipe will be used to place Type V cement in the open well from the bottom of the well casing to the top of the well casing. Cement retainers, as described above, will be used to force cement grout into the annulus and behind perforated screen intervals, as necessary.

If the well casing has been obstructed, as much cement as possible will be placed from 100 feet below the LBFU-bedrock contact to the top of the casing.

The volume of Type V cement will be recorded and will not be less than the estimated volume of material required to fill each interval. All cement grout will consist of Type V cement, or equivalent approved in accordance with the UIC Permit.

Certification

I certify under the penalty of law that I have personally examined and am familiar with the information submitted in this document and all attachments and that, based on my inquiry of those individuals immediately responsible for obtaining the information, I believe that the information is true, accurate, and complete. I am aware that there are significant penalties for submitting false information, including the possibliity of fine and imprisonment. (Ref. 40 CFR § 144.32)

Name and Official Title *(Please type or print)*	Signature	Date Signed
Dan Johnson, VP - General Manager		10/3/2019

INSTRUCTIONS FOR FORM 7520-19

This form replaces forms 7520-12 and 7520-14. Use this form only when work is planned or has occurred that affects the well's construction or operation as an injection well, including work on the casing, tubing or packer (or for shallow Class V wells, the subsurface fluid emplacement network). Use one form per injection well. While reports or other information developed by contractors or service companies may be attached, this form must be signed by a responsible entity as described at 40 CFR 144.32. Note: operators closing Class V wells should use Form 7520-17.

NAME, ADDRESS, PHONE AND/OR EMAIL OF PERMITTEE: Enter the name and street address, city/town, state, and ZIP code of the permittee. Also provide an email address (if available) and/or a phone number.

PERMIT OR EPA ID NUMBER: Enter the well identification number or permit number assigned to the well by the EPA or the permitting authority.

API NUMBER: Enter the number assigned by the local jurisdiction (usually a State Oil and Gas Agency) using the American Petroleum Institute standard numbering system.

FULL WELL NAME: Enter the full name of the well or project.

Enter the **STATE** and **COUNTY** where the well is located. For States that do not have counties, use the name of that State's equivalent jurisdiction at a more local level.

WELL LOCATION: Fill in the complete township, range, and section to the nearest quarter-quarter section. A township is north or south of the baseline, and a range is east or west of the principal meridian (e.g., T12N, R34W). Also include the distance, in feet, from the nearest north or south line and nearest east or west line of the quarter-section. Also, enter the **latitude** and **longitude** of the well in decimal degrees, to five or six places if possible; be sure to include a negative sign for the longitude of a well in the Western Hemisphere and a negative sign for the latitude of a well in the Southern Hemisphere.

Enter the **WELL CLASS,** i.e., the class of injection well as defined in 40 CFR 144.6.

TIMING OF THE ACTION: Check ***Notice prior to work*** if the activity has not yet occurred (i.e., is planned). Check ***Report after work*** if the activity described has already occurred. As appropriate, include the date the activity is expected to start or the date the activity was completed. (Note this may not be available, e.g., for a plugging plan submitted with a permit application.)

TYPE OF ACTION: Check the appropriate box to describe the kind of activity being reported. Check ***Well Rework*** for work that was/will be performed on the well after it has already been in operation as an injection well. Check ***Plugging and Abandonment*** to report on plans for or descriptions of final closure/plugging after use as an injection well. Check ***Conversion to a Non-Injection Well*** if the well is to be converted to something other than an injection well.

Provide a **NARRATIVE DESCRIPTION** of the work planned to be performed, or that was performed. The narrative should include a description of the main procedures planned or that occurred during the work activity. A service company report, daily report, or similar document may be attached if it includes all the requested information and is clear and legible.

For well reworks, include the following information: The reason for the well rework; depths of activity; type of activity; changes to injection well configuration, well casing, or cement behind casing; any plug added to the well and its depth; any newly drilled interval and its depth; method(s) to demonstrate that the well has mechanical integrity (as applicable); and any deviations from the approved rework plan (as applicable).

For a well plugging plan, include the following information: Reason for the well plugging; number of plugs placed, and their depths; materials used as plugs (e.g., cast iron bridge plug, cement, cement retainer); method to set plugs; and wait-on-cement times, if any. Also provide one or more cost estimates from an independent firm in the business of plugging and abandoning wells to plug the well as described in the plan.

For well plugging affidavit, include the following information: Reason for the well plugging; number of plugs placed, and their depths; materials used as plugs (e.g., cast iron bridge plug, cement, cement retainer); method to set plugs; wait-on-cement times, if any; and any deviations from the approved plugging plan (if applicable).

For conversion to a non-injection well, include the following information: Depths of activity; type of activity; changes to injection well configuration, well casing, or cement behind casing; any plug added to the well and its depth; any newly drilled interval and its depth; depths of new perforations; and method(s) to demonstrate that the well has mechanical integrity (as applicable).

For all of the above activities, include a well sketch depicting the work, results of well tests/logging performed, service company tickets, and any other available information demonstrating how the work was/is to be performed. Also, specify whether depths are below ground surface, relative to Kelly bushing, etc.

CERTIFICATION: This form must be signed and dated by either: a responsible corporate officer for a corporation, by a general partner for a partnership, by the proprietor of a sole proprietorship, or by a principal executive or ranking elected official for a public agency.

PAPERWORK REDUCTION ACT NOTICE: The public reporting and recordkeeping burden for this collection of information is estimated to average between 6.0 and 7.9 hours per response, depending on the injection well class. Burden means the total time, effort, or financial resource expended by persons to generate, maintain, retain, or disclose or provide information to or for a Federal Agency. This includes the time needed to review instructions; develop, acquire, install, and utilize technology and systems for the purposes of collecting, validating, and verifying information, processing and maintaining information, and disclosing and providing information; adjust the existing ways to comply with any previously applicable instructions and requirements; train personnel to be able to respond to the collection of information; search data sources; complete and review the collection of information; and, transmit or otherwise disclose the information. An agency may not conduct or sponsor, and a person is not required to respond to, a collection of information unless it displays a currently valid OMB control number. Send comments on the Agency's need for this information, the accuracy of the provided burden estimates, and any suggested methods for minimizing respondent burden, including the use of automated collection techniques to Director, Collection Strategies Division, U.S. Environmental Protection Agency (2822), 1200 Pennsylvania Ave., NW., Washington, D.C. 20460. Include the OMB control number in any correspondence. Do not send the completed forms to this address.

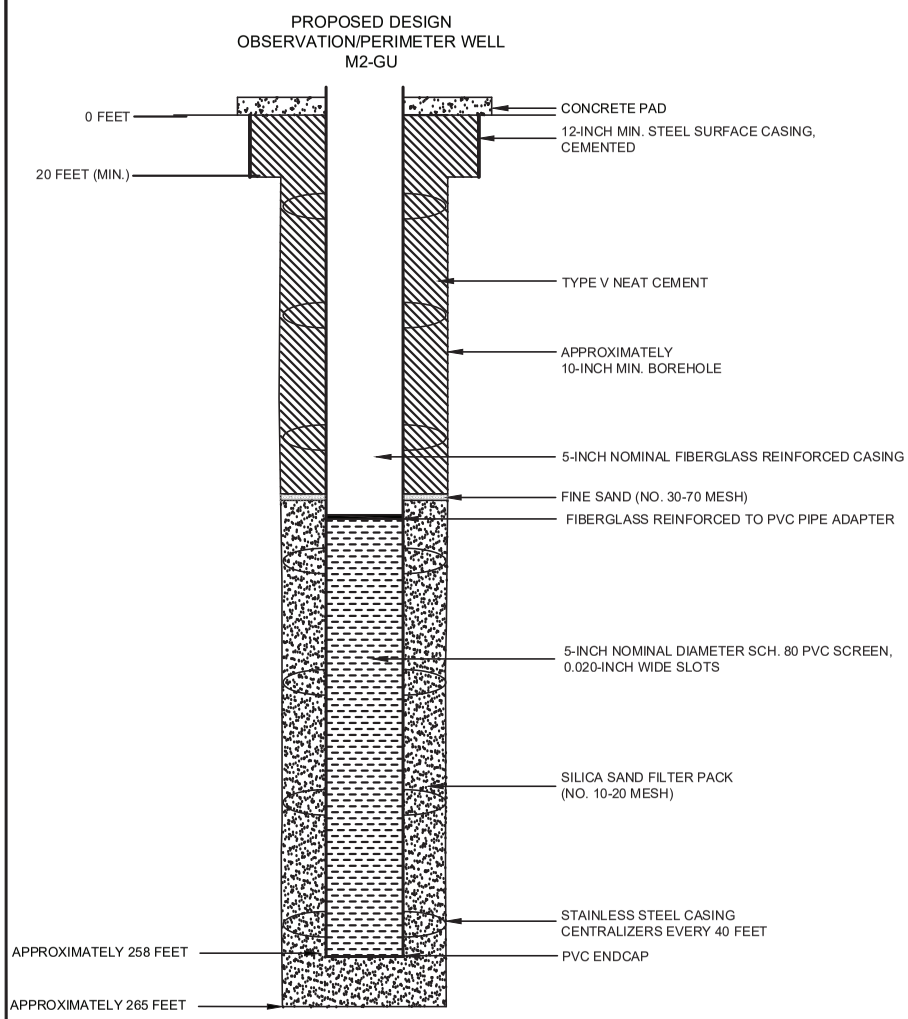

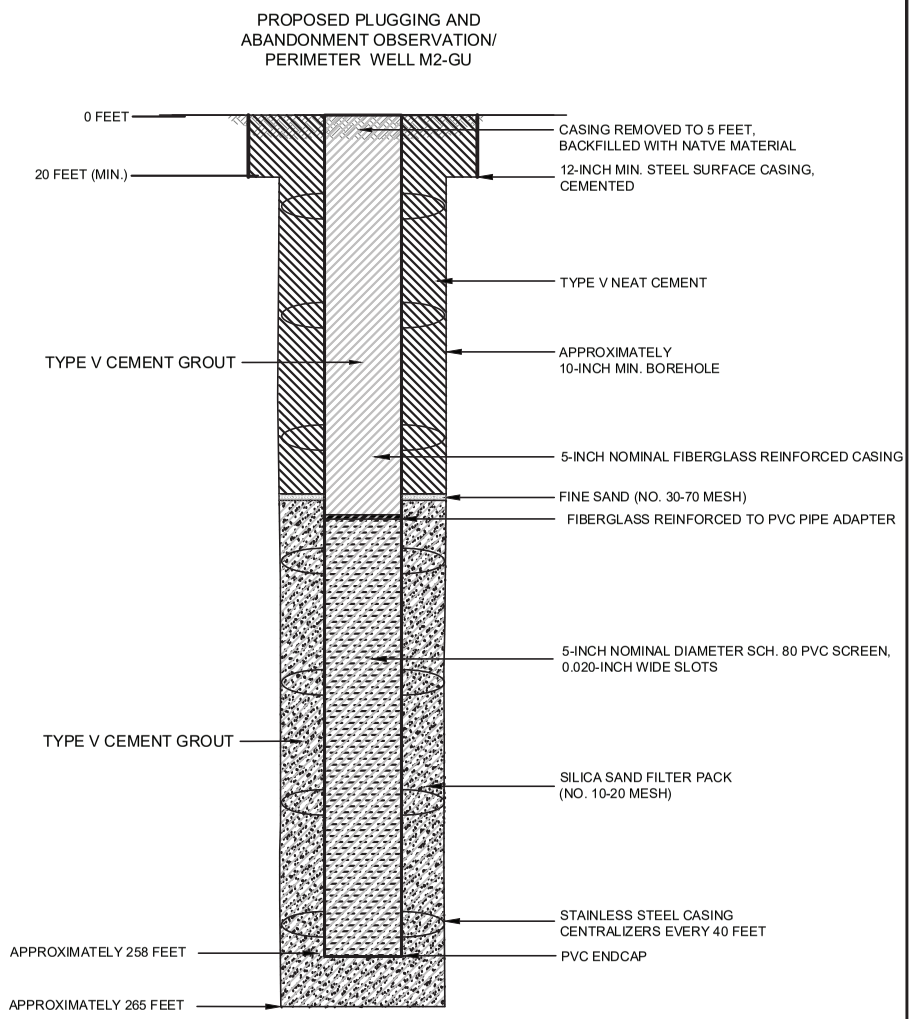

NOTES

1. WELL DESIGN DETAILS ARE BASED ON CORE HOLE AND WELL LOG RECORDS.

HALEY ALDRICH

FLORENCE COPPER, INC.
FLORENCE, ARIZONA

ABANDONMENT SCHEMATIC
OBSERVATION/PERIMETER
WELL M2-GU

SEPTEMBER 2019
SCALE: AS SHOWN

FIGURE 1

OMB No. 2040-0042 Approval Expires 4/30/2022

United States Environmental Protection Agency

EPA

WELL REWORK RECORD, PLUGGING AND ABANDONMENT PLAN, OR PLUGGING AND ABANDONMENT AFFIDAVIT

Name and Address, Phone Number and/or Email of Permittee

Florence Copper Project
1575 W Hunt Hwy,
Florence, AZ 85132

Permit or EPA ID Number	API Number	Full Well Name
R9UIC-AZ3-FY11-1		M3-GL

State	County
Arizona	Pinal

Locate well in two directions from nearest lines of quarter section and drilling unit

Latitude 33.0434904

Surface Location

NE **1/4 of** NE **1/4 of Section** 33 **Township** 4S **Range** 9E

Longitude -111.4218194

_____ **ft. from (N/S)** _____ **Line of quarter section**

_____ **ft. from (E/W)** _____ **Line of quarter section.**

Well Class	Timing of Action (pick one)	Type of Action (pick one)
☐ Class I ☐ Class II ☑ Class III ☐ Class V	☑ Notice Prior to Work Date Expected to Commence March 2021 ☐ Report After Work Date Work Ended	☐ Well Rework ☑ Plugging and Abandonment ☐ Conversion to a Non-Injection Well

Provide a narrative description of the work planned to be performed, or that was performed. Use additional pages as necessary. See instructions.

A workover rig capable of performing the required abandonment operations at the required depths will be moved in and set up over the well. The well casing will be inspected to determine the depth to which the well remains open and if any obstructions are present in the casing; the presence and condition of any existing surface casing will also be documented. If necessary, the well casing will be cleaned out to the planned clean-out depth to enable placement of cement seals.

If surface casing is present, an attempt will be made to remove it. If removal of the surface casing is not feasible, it will be left in the hole and perforated as needed to allow an annular seal to be placed to a depth of at least 25 feet bgs. In areas of agricultural use, the surface casing will be cut at least 5 feet bgs and removed.

If the surface casing cannot be removed, it will be perforated from at least 20 feet below the bedrock-LBFU contact to at least 20 feet above the contact; from at least 20 feet below the base of the MFGU to at least 20 feet above the top of the MFGU; and from at least 25 feet bgs to 5 feet bgs.

A tremie pipe will be used to place Type V cement in the open well from the bottom of the well casing to the top of the well casing. Cement retainers, as described above, will be used to force cement grout into the annulus and behind perforated screen intervals, as necessary.

If the well casing has been obstructed, as much cement as possible will be placed from 100 feet below the LBFU-bedrock contact to the top of the casing.

The volume of Type V cement will be recorded and will not be less than the estimated volume of material required to fill each interval. All cement grout will consist of Type V cement, or equivalent approved in accordance with the UIC Permit.

Certification

I certify under the penalty of law that I have personally examined and am familiar with the information submitted in this document and all attachments and that, based on my inquiry of those individuals immediately responsible for obtaining the information, I believe that the information is true, accurate, and complete. I am aware that there are significant penalties for submitting false information, including the possibliity of fine and imprisonment. (Ref. 40 CFR § 144.32)

Name and Official Title *(Please type or print)*	Signature	Date Signed
Dan Johnson, VP - General Manager		10/3/2019

INSTRUCTIONS FOR FORM 7520-19

This form replaces forms 7520-12 and 7520-14. Use this form only when work is planned or has occurred that affects the well's construction or operation as an injection well, including work on the casing, tubing or packer (or for shallow Class V wells, the subsurface fluid emplacement network). Use one form per injection well. While reports or other information developed by contractors or service companies may be attached, this form must be signed by a responsible entity as described at 40 CFR 144.32. Note: operators closing Class V wells should use Form 7520-17.

NAME, ADDRESS, PHONE AND/OR EMAIL OF PERMITTEE: Enter the name and street address, city/town, state, and ZIP code of the permittee. Also provide an email address (if available) and/or a phone number.

PERMIT OR EPA ID NUMBER: Enter the well identification number or permit number assigned to the well by the EPA or the permitting authority.

API NUMBER: Enter the number assigned by the local jurisdiction (usually a State Oil and Gas Agency) using the American Petroleum Institute standard numbering system.

FULL WELL NAME: Enter the full name of the well or project.

Enter the **STATE** and **COUNTY** where the well is located. For States that do not have counties, use the name of that State's equivalent jurisdiction at a more local level.

WELL LOCATION: Fill in the complete township, range, and section to the nearest quarter-quarter section. A township is north or south of the baseline, and a range is east or west of the principal meridian (e.g., T12N, R34W). Also include the distance, in feet, from the nearest north or south line and nearest east or west line of the quarter-section. Also, enter the **latitude** and **longitude** of the well in decimal degrees, to five or six places if possible; be sure to include a negative sign for the longitude of a well in the Western Hemisphere and a negative sign for the latitude of a well in the Southern Hemisphere.

Enter the **WELL CLASS,** i.e., the class of injection well as defined in 40 CFR 144.6.

TIMING OF THE ACTION: Check ***Notice prior to work*** if the activity has not yet occurred (i.e., is planned). Check ***Report after work*** if the activity described has already occurred. As appropriate, include the date the activity is expected to start or the date the activity was completed. (Note this may not be available, e.g., for a plugging plan submitted with a permit application.)

TYPE OF ACTION: Check the appropriate box to describe the kind of activity being reported. Check ***Well Rework*** for work that was/will be performed on the well after it has already been in operation as an injection well. Check ***Plugging and Abandonment*** to report on plans for or descriptions of final closure/plugging after use as an injection well. Check ***Conversion to a Non-Injection Well*** if the well is to be converted to something other than an injection well.

Provide a **NARRATIVE DESCRIPTION** of the work planned to be performed, or that was performed. The narrative should include a description of the main procedures planned or that occurred during the work activity. A service company report, daily report, or similar document may be attached if it includes all the requested information and is clear and legible.

For well reworks, include the following information: The reason for the well rework; depths of activity; type of activity; changes to injection well configuration, well casing, or cement behind casing; any plug added to the well and its depth; any newly drilled interval and its depth; method(s) to demonstrate that the well has mechanical integrity (as applicable); and any deviations from the approved rework plan (as applicable).

For a well plugging plan, include the following information: Reason for the well plugging; number of plugs placed, and their depths; materials used as plugs (e.g., cast iron bridge plug, cement, cement retainer); method to set plugs; and wait-on-cement times, if any. Also provide one or more cost estimates from an independent firm in the business of plugging and abandoning wells to plug the well as described in the plan.

For well plugging affidavit, include the following information: Reason for the well plugging; number of plugs placed, and their depths; materials used as plugs (e.g., cast iron bridge plug, cement, cement retainer); method to set plugs; wait-on-cement times, if any; and any deviations from the approved plugging plan (if applicable).

For conversion to a non-injection well, include the following information: Depths of activity; type of activity; changes to injection well configuration, well casing, or cement behind casing; any plug added to the well and its depth; any newly drilled interval and its depth; depths of new perforations; and method(s) to demonstrate that the well has mechanical integrity (as applicable).

For all of the above activities, include a well sketch depicting the work, results of well tests/logging performed, service company tickets, and any other available information demonstrating how the work was/is to be performed. Also, specify whether depths are below ground surface, relative to Kelly bushing, etc.

CERTIFICATION: This form must be signed and dated by either: a responsible corporate officer for a corporation, by a general partner for a partnership, by the proprietor of a sole proprietorship, or by a principal executive or ranking elected official for a public agency.

PAPERWORK REDUCTION ACT NOTICE: The public reporting and recordkeeping burden for this collection of information is estimated to average between 6.0 and 7.9 hours per response, depending on the injection well class. Burden means the total time, effort, or financial resource expended by persons to generate, maintain, retain, or disclose or provide information to or for a Federal Agency. This includes the time needed to review instructions; develop, acquire, install, and utilize technology and systems for the purposes of collecting, validating, and verifying information, processing and maintaining information, and disclosing and providing information; adjust the existing ways to comply with any previously applicable instructions and requirements; train personnel to be able to respond to the collection of information; search data sources; complete and review the collection of information; and, transmit or otherwise disclose the information. An agency may not conduct or sponsor, and a person is not required to respond to, a collection of information unless it displays a currently valid OMB control number. Send comments on the Agency's need for this information, the accuracy of the provided burden estimates, and any suggested methods for minimizing respondent burden, including the use of automated collection techniques to Director, Collection Strategies Division, U.S. Environmental Protection Agency (2822), 1200 Pennsylvania Ave., NW., Washington, D.C. 20460. Include the OMB control number in any correspondence. Do not send the completed forms to this address.

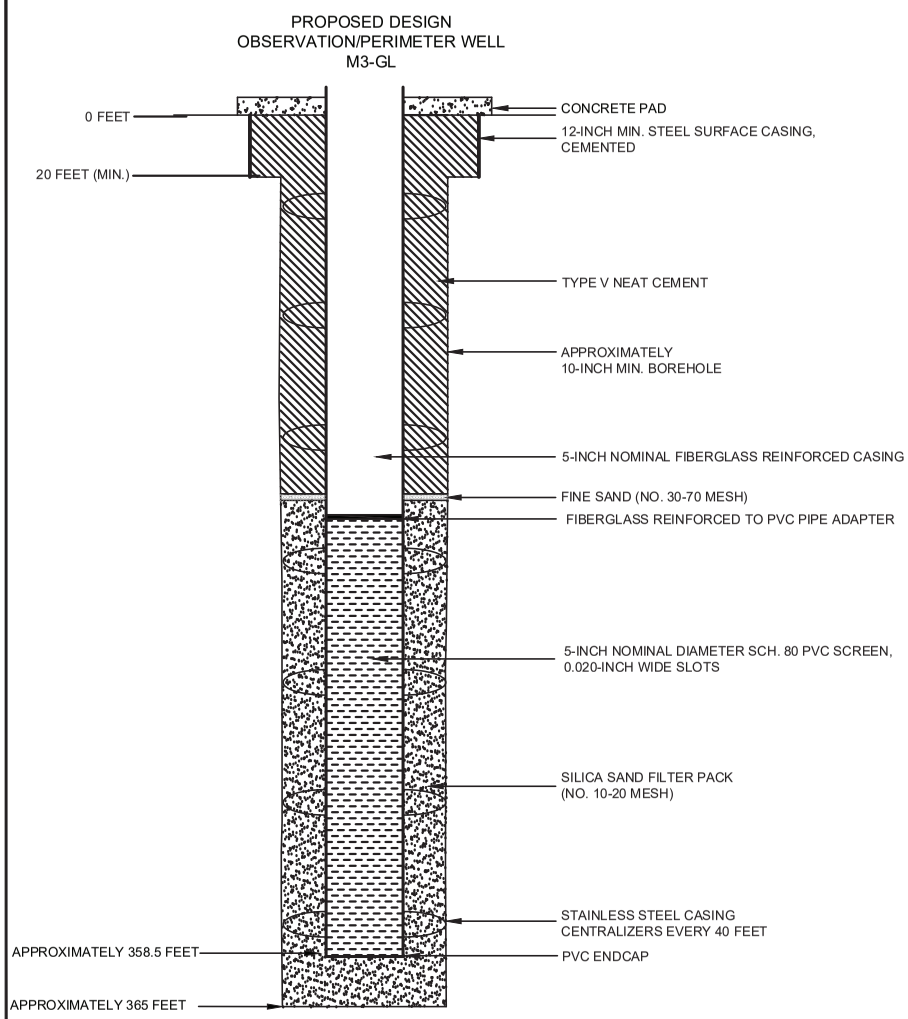

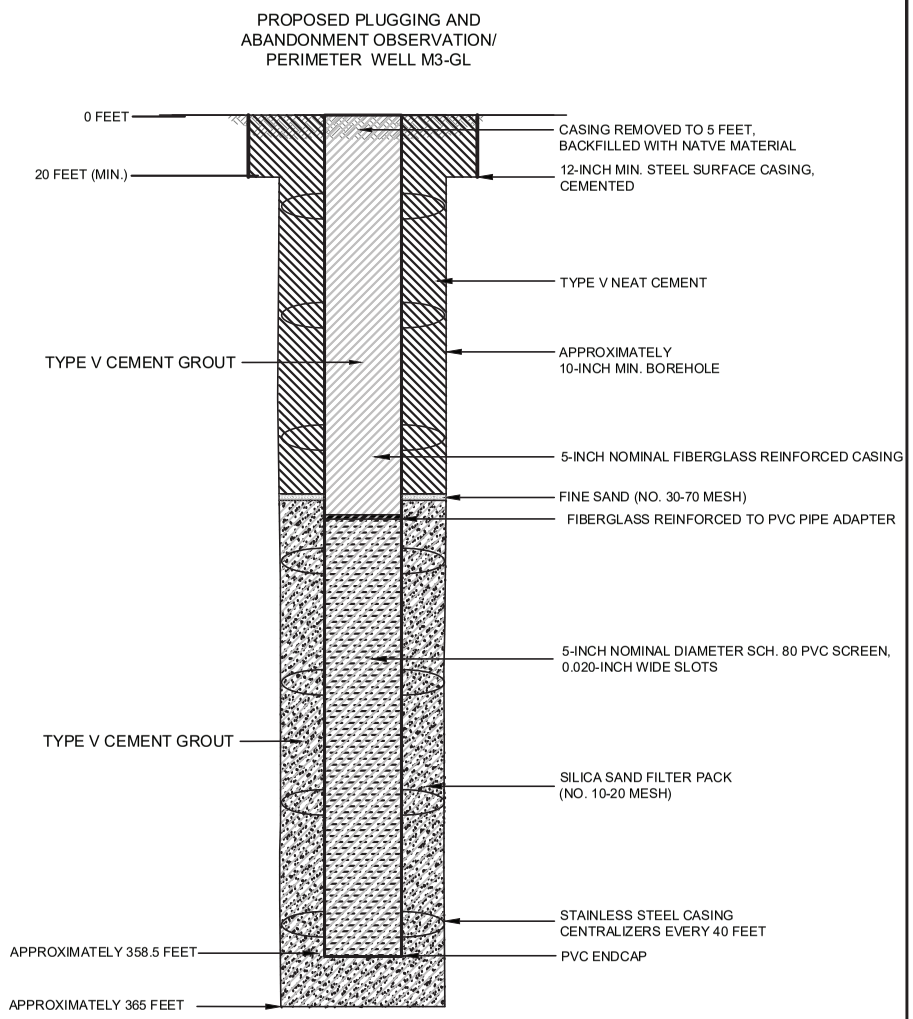

NOTES

1. WELL DESIGN DETAILS ARE BASED ON CORE HOLE AND WELL LOG RECORDS.

HALEY ALDRICH

FLORENCE COPPER, INC.
FLORENCE, ARIZONA

ABANDONMENT SCHEMATIC
OBSERVATION/PERIMETER
WELL M3-GL

SEPTEMBER 2019
SCALE: AS SHOWN

FIGURE 1

OMB No. 2040-0042 Approval Expires 4/30/2022

United States Environmental Protection Agency

WELL REWORK RECORD, PLUGGING AND ABANDONMENT PLAN, OR PLUGGING AND ABANDONMENT AFFIDAVIT

Name and Address, Phone Number and/or Email of Permittee

Florence Copper Project
1575 W Hunt Hwy,
Florence, AZ 85132

Permit or EPA ID Number	API Number	Full Well Name
R9UIC-AZ3-FY11-1		M4-O

State	County
Arizona	Pinal

Locate well in two directions from nearest lines of quarter section and drilling unit

Latitude 33.04357783

Surface Location

NE **1/4 of** NE **1/4 of Section** 33 **Township** 4S **Range** 9E

Longitude -111.4218242

_____ **ft. from (N/S)** _____ **Line of quarter section**

_____ **ft. from (E/W)** _____ **Line of quarter section.**

Well Class	Timing of Action (pick one)	Type of Action (pick one)
☐ Class I ☐ Class II ☑ Class III ☐ Class V	☑ Notice Prior to Work Date Expected to Commence March 2021 ☐ Report After Work Date Work Ended	☐ Well Rework ☑ Plugging and Abandonment ☐ Conversion to a Non-Injection Well

Provide a narrative description of the work planned to be performed, or that was performed. Use additional pages as necessary. See instructions.

A workover rig capable of performing the required abandonment operations at the required depths will be moved in and set up over the well. The well casing will be inspected to determine the depth to which the well remains open and if any obstructions are present in the casing; the presence and condition of any existing surface casing will also be documented. If necessary, the well casing will be cleaned out to the planned clean-out depth to enable placement of cement seals.

If surface casing is present, an attempt will be made to remove it. If removal of the surface casing is not feasible, it will be left in the hole and perforated as needed to allow an annular seal to be placed to a depth of at least 25 feet bgs. In areas of agricultural use, the surface casing will be cut at least 5 feet bgs and removed.

If the surface casing cannot be removed, it will be perforated from at least 20 feet below the bedrock-LBFU contact to at least 20 feet above the contact; from at least 20 feet below the base of the MFGU to at least 20 feet above the top of the MFGU; and from at least 25 feet bgs to 5 feet bgs.

A tremie pipe will be used to place Type V cement in the open well from the bottom of the well casing to the top of the well casing. Cement retainers, as described above, will be used to force cement grout into the annulus and behind perforated screen intervals, as necessary.

If the well casing has been obstructed, as much cement as possible will be placed from 100 feet below the LBFU-bedrock contact to the top of the casing.

The volume of Type V cement will be recorded and will not be less than the estimated volume of material required to fill each interval. All cement grout will consist of Type V cement, or equivalent approved in accordance with the UIC Permit.

Certification

I certify under the penalty of law that I have personally examined and am familiar with the information submitted in this document and all attachments and that, based on my inquiry of those individuals immediately responsible for obtaining the information, I believe that the information is true, accurate, and complete. I am aware that there are significant penalties for submitting false information, including the possibliity of fine and imprisonment. (Ref. 40 CFR § 144.32)

Name and Official Title *(Please type or print)*	Signature	Date Signed
Dan Johnson, VP - General Manager		10/3/2019

INSTRUCTIONS FOR FORM 7520-19

This form replaces forms 7520-12 and 7520-14. Use this form only when work is planned or has occurred that affects the well's construction or operation as an injection well, including work on the casing, tubing or packer (or for shallow Class V wells, the subsurface fluid emplacement network). Use one form per injection well. While reports or other information developed by contractors or service companies may be attached, this form must be signed by a responsible entity as described at 40 CFR 144.32. Note: operators closing Class V wells should use Form 7520-17.

NAME, ADDRESS, PHONE AND/OR EMAIL OF PERMITTEE: Enter the name and street address, city/town, state, and ZIP code of the permittee. Also provide an email address (if available) and/or a phone number.

PERMIT OR EPA ID NUMBER: Enter the well identification number or permit number assigned to the well by the EPA or the permitting authority.

API NUMBER: Enter the number assigned by the local jurisdiction (usually a State Oil and Gas Agency) using the American Petroleum Institute standard numbering system.

FULL WELL NAME: Enter the full name of the well or project.

Enter the **STATE** and **COUNTY** where the well is located. For States that do not have counties, use the name of that State's equivalent jurisdiction at a more local level.

WELL LOCATION: Fill in the complete township, range, and section to the nearest quarter-quarter section. A township is north or south of the baseline, and a range is east or west of the principal meridian (e.g., T12N, R34W). Also include the distance, in feet, from the nearest north or south line and nearest east or west line of the quarter-section. Also, enter the **latitude** and **longitude** of the well in decimal degrees, to five or six places if possible; be sure to include a negative sign for the longitude of a well in the Western Hemisphere and a negative sign for the latitude of a well in the Southern Hemisphere.

Enter the **WELL CLASS,** i.e., the class of injection well as defined in 40 CFR 144.6.

TIMING OF THE ACTION: Check ***Notice prior to work*** if the activity has not yet occurred (i.e., is planned). Check ***Report after work*** if the activity described has already occurred. As appropriate, include the date the activity is expected to start or the date the activity was completed. (Note this may not be available, e.g., for a plugging plan submitted with a permit application.)

TYPE OF ACTION: Check the appropriate box to describe the kind of activity being reported. Check ***Well Rework*** for work that was/will be performed on the well after it has already been in operation as an injection well. Check ***Plugging and Abandonment*** to report on plans for or descriptions of final closure/plugging after use as an injection well. Check ***Conversion to a Non-Injection Well*** if the well is to be converted to something other than an injection well.

Provide a **NARRATIVE DESCRIPTION** of the work planned to be performed, or that was performed. The narrative should include a description of the main procedures planned or that occurred during the work activity. A service company report, daily report, or similar document may be attached if it includes all the requested information and is clear and legible.

For well reworks, include the following information: The reason for the well rework; depths of activity; type of activity; changes to injection well configuration, well casing, or cement behind casing; any plug added to the well and its depth; any newly drilled interval and its depth; method(s) to demonstrate that the well has mechanical integrity (as applicable); and any deviations from the approved rework plan (as applicable).

For a well plugging plan, include the following information: Reason for the well plugging; number of plugs placed, and their depths; materials used as plugs (e.g., cast iron bridge plug, cement, cement retainer); method to set plugs; and wait-on-cement times, if any. Also provide one or more cost estimates from an independent firm in the business of plugging and abandoning wells to plug the well as described in the plan.

For well plugging affidavit, include the following information: Reason for the well plugging; number of plugs placed, and their depths; materials used as plugs (e.g., cast iron bridge plug, cement, cement retainer); method to set plugs; wait-on-cement times, if any; and any deviations from the approved plugging plan (if applicable).

For conversion to a non-injection well, include the following information: Depths of activity; type of activity; changes to injection well configuration, well casing, or cement behind casing; any plug added to the well and its depth; any newly drilled interval and its depth; depths of new perforations; and method(s) to demonstrate that the well has mechanical integrity (as applicable).

For all of the above activities, include a well sketch depicting the work, results of well tests/logging performed, service company tickets, and any other available information demonstrating how the work was/is to be performed. Also, specify whether depths are below ground surface, relative to Kelly bushing, etc.

CERTIFICATION: This form must be signed and dated by either: a responsible corporate officer for a corporation, by a general partner for a partnership, by the proprietor of a sole proprietorship, or by a principal executive or ranking elected official for a public agency.

PAPERWORK REDUCTION ACT NOTICE: The public reporting and recordkeeping burden for this collection of information is estimated to average between 6.0 and 7.9 hours per response, depending on the injection well class. Burden means the total time, effort, or financial resource expended by persons to generate, maintain, retain, or disclose or provide information to or for a Federal Agency. This includes the time needed to review instructions; develop, acquire, install, and utilize technology and systems for the purposes of collecting, validating, and verifying information, processing and maintaining information, and disclosing and providing information; adjust the existing ways to comply with any previously applicable instructions and requirements; train personnel to be able to respond to the collection of information; search data sources; complete and review the collection of information; and, transmit or otherwise disclose the information. An agency may not conduct or sponsor, and a person is not required to respond to, a collection of information unless it displays a currently valid OMB control number. Send comments on the Agency's need for this information, the accuracy of the provided burden estimates, and any suggested methods for minimizing respondent burden, including the use of automated collection techniques to Director, Collection Strategies Division, U.S. Environmental Protection Agency (2822), 1200 Pennsylvania Ave., NW., Washington, D.C. 20460. Include the OMB control number in any correspondence. Do not send the completed forms to this address.

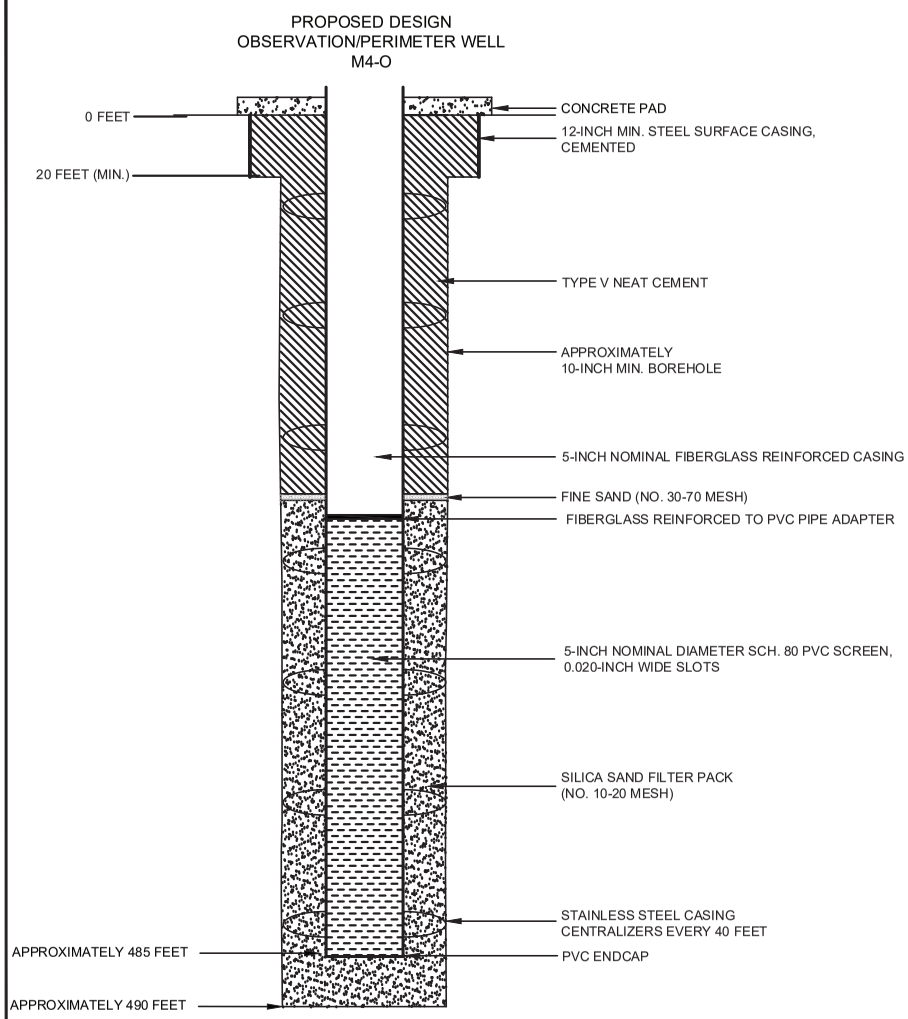

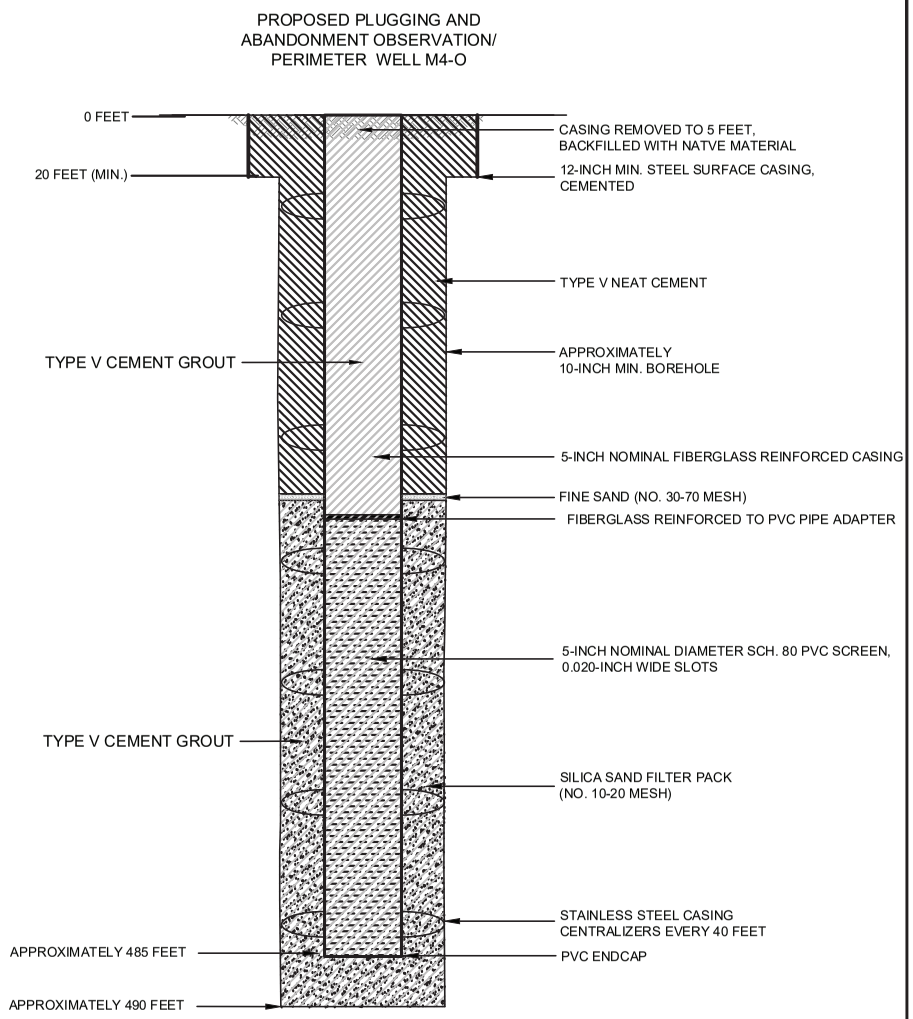

NOTES

1. WELL DESIGN DETAILS ARE BASED ON CORE HOLE AND WELL LOG RECORDS.

HALEY ALDRICH

FLORENCE COPPER, INC.
FLORENCE, ARIZONA

ABANDONMENT SCHEMATIC
OBSERVATION/PERIMETER
WELL M4-O

SEPTEMBER 2019
SCALE: AS SHOWN

FIGURE 1

OMB No. 2040-0042 Approval Expires 4/30/2022

United States Environmental Protection Agency

EPA

WELL REWORK RECORD, PLUGGING AND ABANDONMENT PLAN, OR PLUGGING AND ABANDONMENT AFFIDAVIT

Name and Address, Phone Number and/or Email of Permittee

Florence Copper Project
1575 W Hunt Hwy,
Florence, AZ 85132

Permit or EPA ID Number	API Number	Full Well Name
R9UIC-AZ3-FY11-1		M5-S

State	County
Arizona	Pinal

Locate well in two directions from nearest lines of quarter section and drilling unit

Latitude 33.04358295

Surface Location

NE **1/4 of** NE **1/4 of Section** 33 **Township** 4S **Range** 9E

Longitude -111.42166

_____ **ft. from (N/S)** _____ **Line of quarter section**

_____ **ft. from (E/W)** _____ **Line of quarter section.**

Well Class	Timing of Action (pick one)	Type of Action (pick one)
☐ Class I ☐ Class II ☑ Class III ☐ Class V	☑ Notice Prior to Work Date Expected to Commence March 2021 ☐ Report After Work Date Work Ended	☐ Well Rework ☑ Plugging and Abandonment ☐ Conversion to a Non-Injection Well

Provide a narrative description of the work planned to be performed, or that was performed. Use additional pages as necessary. See instructions.

A workover rig capable of performing the required abandonment operations at the required depths will be moved in and set up over the well. The well casing will be inspected to determine the depth to which the well remains open and if any obstructions are present in the casing; the presence and condition of any existing surface casing will also be documented. If necessary, the well casing will be cleaned out to the planned clean-out depth to enable placement of cement seals.

If surface casing is present, an attempt will be made to remove it. If removal of the surface casing is not feasible, it will be left in the hole and perforated as needed to allow an annular seal to be placed to a depth of at least 25 feet bgs. In areas of agricultural use, the surface casing will be cut at least 5 feet bgs and removed.

If the surface casing cannot be removed, it will be perforated from at least 20 feet below the bedrock-LBFU contact to at least 20 feet above the contact; from at least 20 feet below the base of the MFGU to at least 20 feet above the top of the MFGU; and from at least 25 feet bgs to 5 feet bgs.

A tremie pipe will be used to place Type V cement in the open well from the bottom of the well casing to the top of the well casing. Cement retainers, as described above, will be used to force cement grout into the annulus and behind perforated screen intervals, as necessary.

If the well casing has been obstructed, as much cement as possible will be placed from 100 feet below the LBFU-bedrock contact to the top of the casing.

The volume of Type V cement will be recorded and will not be less than the estimated volume of material required to fill each interval. All cement grout will consist of Type V cement, or equivalent approved in accordance with the UIC Permit.

Certification

I certify under the penalty of law that I have personally examined and am familiar with the information submitted in this document and all attachments and that, based on my inquiry of those individuals immediately responsible for obtaining the information, I believe that the information is true, accurate, and complete. I am aware that there are significant penalties for submitting false information, including the possibliity of fine and imprisonment. (Ref. 40 CFR § 144.32)

Name and Official Title *(Please type or print)*	Signature	Date Signed
Dan Johnson, VP - General Manager		10/3/2019

INSTRUCTIONS FOR FORM 7520-19

This form replaces forms 7520-12 and 7520-14. Use this form only when work is planned or has occurred that affects the well's construction or operation as an injection well, including work on the casing, tubing or packer (or for shallow Class V wells, the subsurface fluid emplacement network). Use one form per injection well. While reports or other information developed by contractors or service companies may be attached, this form must be signed by a responsible entity as described at 40 CFR 144.32. Note: operators closing Class V wells should use Form 7520-17.

NAME, ADDRESS, PHONE AND/OR EMAIL OF PERMITTEE: Enter the name and street address, city/town, state, and ZIP code of the permittee. Also provide an email address (if available) and/or a phone number.

PERMIT OR EPA ID NUMBER: Enter the well identification number or permit number assigned to the well by the EPA or the permitting authority.

API NUMBER: Enter the number assigned by the local jurisdiction (usually a State Oil and Gas Agency) using the American Petroleum Institute standard numbering system.

FULL WELL NAME: Enter the full name of the well or project.

Enter the **STATE** and **COUNTY** where the well is located. For States that do not have counties, use the name of that State's equivalent jurisdiction at a more local level.

WELL LOCATION: Fill in the complete township, range, and section to the nearest quarter-quarter section. A township is north or south of the baseline, and a range is east or west of the principal meridian (e.g., T12N, R34W). Also include the distance, in feet, from the nearest north or south line and nearest east or west line of the quarter-section. Also, enter the **latitude** and **longitude** of the well in decimal degrees, to five or six places if possible; be sure to include a negative sign for the longitude of a well in the Western Hemisphere and a negative sign for the latitude of a well in the Southern Hemisphere.

Enter the **WELL CLASS,** i.e., the class of injection well as defined in 40 CFR 144.6.

TIMING OF THE ACTION: Check ***Notice prior to work*** if the activity has not yet occurred (i.e., is planned). Check ***Report after work*** if the activity described has already occurred. As appropriate, include the date the activity is expected to start or the date the activity was completed. (Note this may not be available, e.g., for a plugging plan submitted with a permit application.)

TYPE OF ACTION: Check the appropriate box to describe the kind of activity being reported. Check ***Well Rework*** for work that was/will be performed on the well after it has already been in operation as an injection well. Check ***Plugging and Abandonment*** to report on plans for or descriptions of final closure/plugging after use as an injection well. Check ***Conversion to a Non-Injection Well*** if the well is to be converted to something other than an injection well.

Provide a **NARRATIVE DESCRIPTION** of the work planned to be performed, or that was performed. The narrative should include a description of the main procedures planned or that occurred during the work activity. A service company report, daily report, or similar document may be attached if it includes all the requested information and is clear and legible.

For well reworks, include the following information: The reason for the well rework; depths of activity; type of activity; changes to injection well configuration, well casing, or cement behind casing; any plug added to the well and its depth; any newly drilled interval and its depth; method(s) to demonstrate that the well has mechanical integrity (as applicable); and any deviations from the approved rework plan (as applicable).

For a well plugging plan, include the following information: Reason for the well plugging; number of plugs placed, and their depths; materials used as plugs (e.g., cast iron bridge plug, cement, cement retainer); method to set plugs; and wait-on-cement times, if any. Also provide one or more cost estimates from an independent firm in the business of plugging and abandoning wells to plug the well as described in the plan.

For well plugging affidavit, include the following information: Reason for the well plugging; number of plugs placed, and their depths; materials used as plugs (e.g., cast iron bridge plug, cement, cement retainer); method to set plugs; wait-on-cement times, if any; and any deviations from the approved plugging plan (if applicable).

For conversion to a non-injection well, include the following information: Depths of activity; type of activity; changes to injection well configuration, well casing, or cement behind casing; any plug added to the well and its depth; any newly drilled interval and its depth; depths of new perforations; and method(s) to demonstrate that the well has mechanical integrity (as applicable).

For all of the above activities, include a well sketch depicting the work, results of well tests/logging performed, service company tickets, and any other available information demonstrating how the work was/is to be performed. Also, specify whether depths are below ground surface, relative to Kelly bushing, etc.

CERTIFICATION: This form must be signed and dated by either: a responsible corporate officer for a corporation, by a general partner for a partnership, by the proprietor of a sole proprietorship, or by a principal executive or ranking elected official for a public agency.

PAPERWORK REDUCTION ACT NOTICE: The public reporting and recordkeeping burden for this collection of information is estimated to average between 6.0 and 7.9 hours per response, depending on the injection well class. Burden means the total time, effort, or financial resource expended by persons to generate, maintain, retain, or disclose or provide information to or for a Federal Agency. This includes the time needed to review instructions; develop, acquire, install, and utilize technology and systems for the purposes of collecting, validating, and verifying information, processing and maintaining information, and disclosing and providing information; adjust the existing ways to comply with any previously applicable instructions and requirements; train personnel to be able to respond to the collection of information; search data sources; complete and review the collection of information; and, transmit or otherwise disclose the information. An agency may not conduct or sponsor, and a person is not required to respond to, a collection of information unless it displays a currently valid OMB control number. Send comments on the Agency's need for this information, the accuracy of the provided burden estimates, and any suggested methods for minimizing respondent burden, including the use of automated collection techniques to Director, Collection Strategies Division, U.S. Environmental Protection Agency (2822), 1200 Pennsylvania Ave., NW., Washington, D.C. 20460. Include the OMB control number in any correspondence. Do not send the completed forms to this address.

Saved by: MNICHOLLS Printed: 7/25/2019 7:20 PM Sheet: HA-FIG-A-L(2)
\\HALEYALDRICH.COM\SHARE\PHX_COMMON\PROJECTS\FLORENCE COPPER\132473 FLORENCE GROUNDWATER PERMITTING\CAD\132473_000-OBSERVATION_WELL_CONSTRUCTION DIAGRAM.DWG

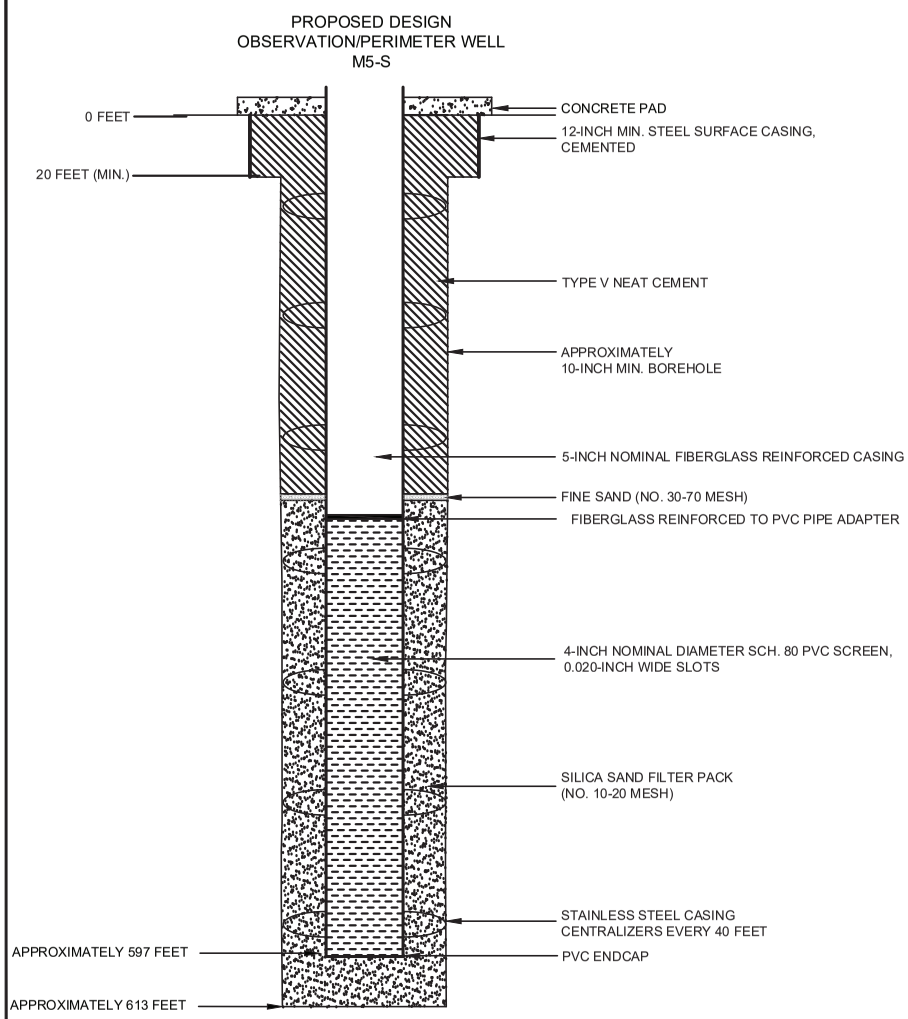

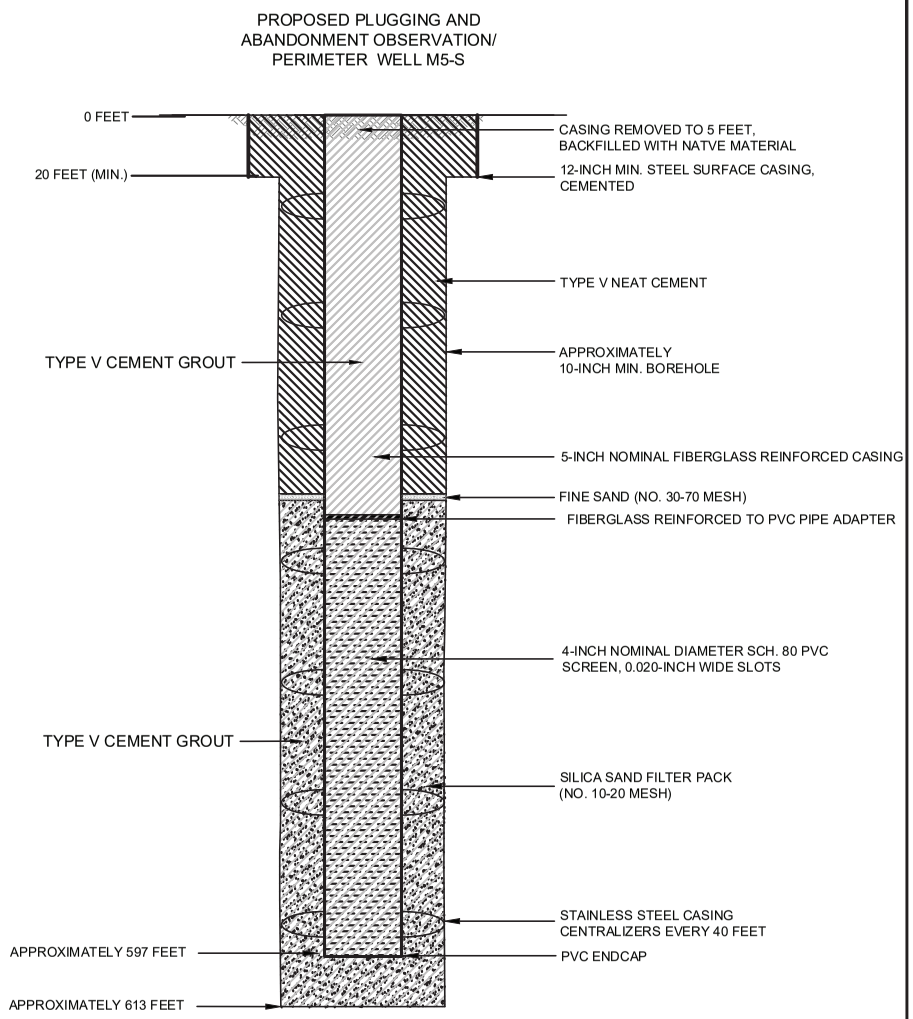

NOTES

1. WELL DESIGN DETAILS ARE BASED ON CORE HOLE AND WELL LOG RECORDS.

HALEY ALDRICH

FLORENCE COPPER, INC.
FLORENCE, ARIZONA

ABANDONMENT SCHEMATIC
OBSERVATION/PERIMETER
WELL M5-S

SEPTEMBER 2019
SCALE: AS SHOWN

FIGURE 1

OMB No. 2040-0042 Approval Expires 4/30/2022

United States Environmental Protection Agency

WELL REWORK RECORD, PLUGGING AND ABANDONMENT PLAN, OR PLUGGING AND ABANDONMENT AFFIDAVIT

Name and Address, Phone Number and/or Email of Permittee

Florence Copper Project
1575 W Hunt Hwy,
Florence, AZ 85132

Permit or EPA ID Number	API Number	Full Well Name
R9UIC-AZ3-FY11-1		M6-GU

State	County
Arizona	Pinal

Locate well in two directions from nearest lines of quarter section and drilling unit

Surface Location

SW 1/4 of NW 1/4 of Section 28 Township 4S Range 9E

Latitude 33.05418567

Longitude -111.4360545

ft. from (N/S) Line of quarter section

ft. from (E/W) Line of quarter section.

Well Class	Timing of Action (pick one)	Type of Action (pick one)
☐ Class I ☐ Class II ☑ Class III ☐ Class V	☑ Notice Prior to Work Date Expected to Commence March 2021 ☐ Report After Work Date Work Ended	☐ Well Rework ☑ Plugging and Abandonment ☐ Conversion to a Non-Injection Well

Provide a narrative description of the work planned to be performed, or that was performed. Use additional pages as necessary. See instructions.

A workover rig capable of performing the required abandonment operations at the required depths will be moved in and set up over the well. The well casing will be inspected to determine the depth to which the well remains open and if any obstructions are present in the casing; the presence and condition of any existing surface casing will also be documented. If necessary, the well casing will be cleaned out to the planned clean-out depth to enable placement of cement seals.

If surface casing is present, an attempt will be made to remove it. If removal of the surface casing is not feasible, it will be left in the hole and perforated as needed to allow an annular seal to be placed to a depth of at least 25 feet bgs. In areas of agricultural use, the surface casing will be cut at least 5 feet bgs and removed.

If the surface casing cannot be removed, it will be perforated from at least 20 feet below the bedrock-LBFU contact to at least 20 feet above the contact; from at least 20 feet below the base of the MFGU to at least 20 feet above the top of the MFGU; and from at least 25 feet bgs to 5 feet bgs.

A tremie pipe will be used to place Type V cement in the open well from the bottom of the well casing to the top of the well casing. Cement retainers, as described above, will be used to force cement grout into the annulus and behind perforated screen intervals, as necessary.

If the well casing has been obstructed, as much cement as possible will be placed from 100 feet below the LBFU-bedrock contact to the top of the casing.

The volume of Type V cement will be recorded and will not be less than the estimated volume of material required to fill each interval. All cement grout will consist of Type V cement, or equivalent approved in accordance with the UIC Permit.

Certification

I certify under the penalty of law that I have personally examined and am familiar with the information submitted in this document and all attachments and that, based on my inquiry of those individuals immediately responsible for obtaining the information, I believe that the information is true, accurate, and complete. I am aware that there are significant penalties for submitting false information, including the possibliity of fine and imprisonment. (Ref. 40 CFR § 144.32)

Name and Official Title *(Please type or print)*	Signature	Date Signed
Dan Johnson, VP - General Manager		10/3/2019

INSTRUCTIONS FOR FORM 7520-19

This form replaces forms 7520-12 and 7520-14. Use this form only when work is planned or has occurred that affects the well's construction or operation as an injection well, including work on the casing, tubing or packer (or for shallow Class V wells, the subsurface fluid emplacement network). Use one form per injection well. While reports or other information developed by contractors or service companies may be attached, this form must be signed by a responsible entity as described at 40 CFR 144.32. Note: operators closing Class V wells should use Form 7520-17.

NAME, ADDRESS, PHONE AND/OR EMAIL OF PERMITTEE: Enter the name and street address, city/town, state, and ZIP code of the permittee. Also provide an email address (if available) and/or a phone number.

PERMIT OR EPA ID NUMBER: Enter the well identification number or permit number assigned to the well by the EPA or the permitting authority.

API NUMBER: Enter the number assigned by the local jurisdiction (usually a State Oil and Gas Agency) using the American Petroleum Institute standard numbering system.

FULL WELL NAME: Enter the full name of the well or project.

Enter the **STATE** and **COUNTY** where the well is located. For States that do not have counties, use the name of that State's equivalent jurisdiction at a more local level.

WELL LOCATION: Fill in the complete township, range, and section to the nearest quarter-quarter section. A township is north or south of the baseline, and a range is east or west of the principal meridian (e.g., T12N, R34W). Also include the distance, in feet, from the nearest north or south line and nearest east or west line of the quarter-section. Also, enter the **latitude** and **longitude** of the well in decimal degrees, to five or six places if possible; be sure to include a negative sign for the longitude of a well in the Western Hemisphere and a negative sign for the latitude of a well in the Southern Hemisphere.

Enter the **WELL CLASS,** i.e., the class of injection well as defined in 40 CFR 144.6.

TIMING OF THE ACTION: Check ***Notice prior to work*** if the activity has not yet occurred (i.e., is planned). Check ***Report after work*** if the activity described has already occurred. As appropriate, include the date the activity is expected to start or the date the activity was completed. (Note this may not be available, e.g., for a plugging plan submitted with a permit application.)

TYPE OF ACTION: Check the appropriate box to describe the kind of activity being reported. Check ***Well Rework*** for work that was/will be performed on the well after it has already been in operation as an injection well. Check ***Plugging and Abandonment*** to report on plans for or descriptions of final closure/plugging after use as an injection well. Check ***Conversion to a Non-Injection Well*** if the well is to be converted to something other than an injection well.

Provide a **NARRATIVE DESCRIPTION** of the work planned to be performed, or that was performed. The narrative should include a description of the main procedures planned or that occurred during the work activity. A service company report, daily report, or similar document may be attached if it includes all the requested information and is clear and legible.

For well reworks, include the following information: The reason for the well rework; depths of activity; type of activity; changes to injection well configuration, well casing, or cement behind casing; any plug added to the well and its depth; any newly drilled interval and its depth; method(s) to demonstrate that the well has mechanical integrity (as applicable); and any deviations from the approved rework plan (as applicable).

For a well plugging plan, include the following information: Reason for the well plugging; number of plugs placed, and their depths; materials used as plugs (e.g., cast iron bridge plug, cement, cement retainer); method to set plugs; and wait-on-cement times, if any. Also provide one or more cost estimates from an independent firm in the business of plugging and abandoning wells to plug the well as described in the plan.

For well plugging affidavit, include the following information: Reason for the well plugging; number of plugs placed, and their depths; materials used as plugs (e.g., cast iron bridge plug, cement, cement retainer); method to set plugs; wait-on-cement times, if any; and any deviations from the approved plugging plan (if applicable).

For conversion to a non-injection well, include the following information: Depths of activity; type of activity; changes to injection well configuration, well casing, or cement behind casing; any plug added to the well and its depth; any newly drilled interval and its depth; depths of new perforations; and method(s) to demonstrate that the well has mechanical integrity (as applicable).

For all of the above activities, include a well sketch depicting the work, results of well tests/logging performed, service company tickets, and any other available information demonstrating how the work was/is to be performed. Also, specify whether depths are below ground surface, relative to Kelly bushing, etc.

CERTIFICATION: This form must be signed and dated by either: a responsible corporate officer for a corporation, by a general partner for a partnership, by the proprietor of a sole proprietorship, or by a principal executive or ranking elected official for a public agency.

PAPERWORK REDUCTION ACT NOTICE: The public reporting and recordkeeping burden for this collection of information is estimated to average between 6.0 and 7.9 hours per response, depending on the injection well class. Burden means the total time, effort, or financial resource expended by persons to generate, maintain, retain, or disclose or provide information to or for a Federal Agency. This includes the time needed to review instructions; develop, acquire, install, and utilize technology and systems for the purposes of collecting, validating, and verifying information, processing and maintaining information, and disclosing and providing information; adjust the existing ways to comply with any previously applicable instructions and requirements; train personnel to be able to respond to the collection of information; search data sources; complete and review the collection of information; and, transmit or otherwise disclose the information. An agency may not conduct or sponsor, and a person is not required to respond to, a collection of information unless it displays a currently valid OMB control number. Send comments on the Agency's need for this information, the accuracy of the provided burden estimates, and any suggested methods for minimizing respondent burden, including the use of automated collection techniques to Director, Collection Strategies Division, U.S. Environmental Protection Agency (2822), 1200 Pennsylvania Ave., NW., Washington, D.C. 20460. Include the OMB control number in any correspondence. Do not send the completed forms to this address.

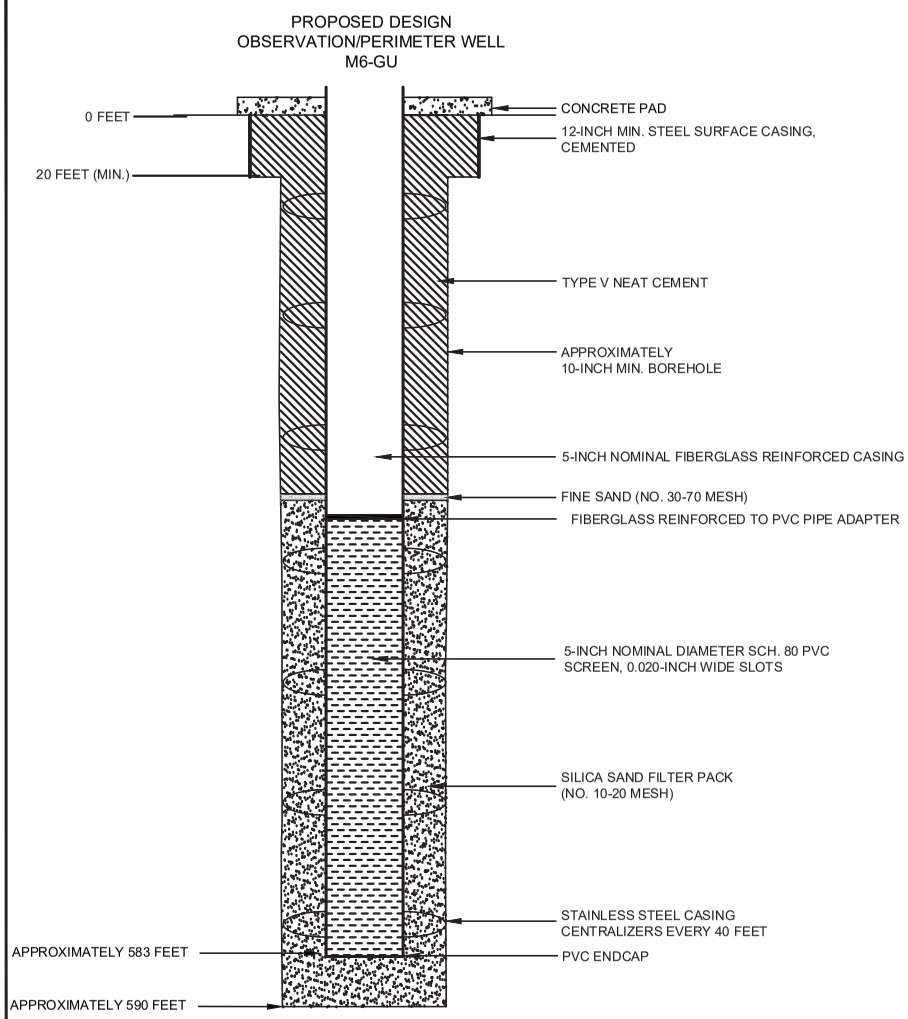

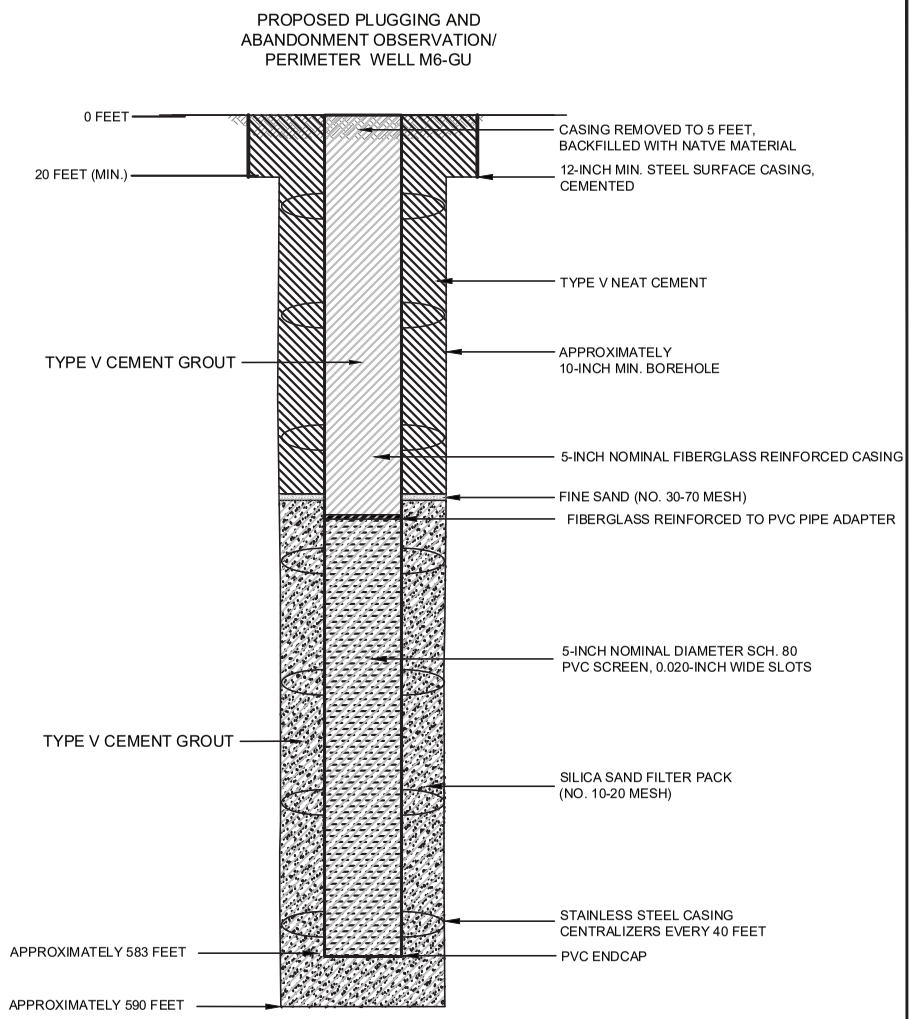

NOTES

1. WELL DESIGN DETAILS ARE BASED ON CORE HOLE AND WELL LOG RECORDS.

HALEY ALDRICH

FLORENCE COPPER, INC.
FLORENCE, ARIZONA

ABANDONMENT SCHEMATIC
OBSERVATION/PERIMETER
WELL M6-GU

SEPTEMBER 2019
SCALE: AS SHOWN

FIGURE 1

OMB No. 2040-0042 Approval Expires 4/30/2022

United States Environmental Protection Agency

EPA

WELL REWORK RECORD, PLUGGING AND ABANDONMENT PLAN, OR PLUGGING AND ABANDONMENT AFFIDAVIT

Name and Address, Phone Number and/or Email of Permittee

Florence Copper Project
1575 W Hunt Hwy,
Florence, AZ 85132

Permit or EPA ID Number	API Number	Full Well Name
R9UIC-AZ3-FY11-1		M7-GL

State	County
Arizona	Pinal

Locate well in two directions from nearest lines of quarter section and drilling unit

Latitude 33.05411719

Longitude -111.4359722

Surface Location

SW **1/4 of** NW **1/4 of Section** 28 **Township** 4S **Range** 9E

_____ **ft. from (N/S)** _____ **Line of quarter section**

_____ **ft. from (E/W)** _____ **Line of quarter section.**

Well Class	Timing of Action (pick one)	Type of Action (pick one)
☐ Class I ☐ Class II ☑ Class III ☐ Class V	☑ Notice Prior to Work Date Expected to Commence March 2021 ☐ Report After Work Date Work Ended	☐ Well Rework ☑ Plugging and Abandonment ☐ Conversion to a Non-Injection Well

Provide a narrative description of the work planned to be performed, or that was performed. Use additional pages as necessary. See instructions.

A workover rig capable of performing the required abandonment operations at the required depths will be moved in and set up over the well. The well casing will be inspected to determine the depth to which the well remains open and if any obstructions are present in the casing; the presence and condition of any existing surface casing will also be documented. If necessary, the well casing will be cleaned out to the bottom of the deepest screen or perforation to enable placement of cement seals.

If surface casing is present, an attempt will be made to remove it. If removal of the surface casing is not feasible, it will be left in the hole and perforated as needed to allow an annular seal to be placed to a depth of at least 25 feet bgs. In areas of agricultural use, the surface casing will be cut at least 5 feet bgs and removed.

If the surface casing cannot be removed, it will be perforated from at least 20 feet below the bedrock-LBFU contact to at least 20 feet above the contact; from at least 20 feet below the base of the MFGU to at least 20 feet above the top of the MFGU; and from at least 25 feet bgs to 5 feet bgs.

A tremie pipe will be used to place Type V cement in the open well from the bottom of the well casing to the top of the well casing. Cement retainers, as described above, will be used to force cement grout into the annulus and behind perforated screen intervals, as necessary.

If the well casing has been obstructed, as much cement as possible will be placed from 100 feet below the LBFU-bedrock contact to the top of the casing.

The volume of Type V cement will be recorded and will not be less than the estimated volume of material required to fill each interval. All cement grout will consist of Type V cement, or equivalent approved in accordance with the UIC Permit.

Certification

I certify under the penalty of law that I have personally examined and am familiar with the information submitted in this document and all attachments and that, based on my inquiry of those individuals immediately responsible for obtaining the information, I believe that the information is true, accurate, and complete. I am aware that there are significant penalties for submitting false information, including the possibliity of fine and imprisonment. (Ref. 40 CFR § 144.32)

Name and Official Title *(Please type or print)*	Signature	Date Signed
Dan Johnson, VP - General Manager		10/3/2019

INSTRUCTIONS FOR FORM 7520-19

This form replaces forms 7520-12 and 7520-14. Use this form only when work is planned or has occurred that affects the well's construction or operation as an injection well, including work on the casing, tubing or packer (or for shallow Class V wells, the subsurface fluid emplacement network). Use one form per injection well. While reports or other information developed by contractors or service companies may be attached, this form must be signed by a responsible entity as described at 40 CFR 144.32. Note: operators closing Class V wells should use Form 7520-17.

NAME, ADDRESS, PHONE AND/OR EMAIL OF PERMITTEE: Enter the name and street address, city/town, state, and ZIP code of the permittee. Also provide an email address (if available) and/or a phone number.

PERMIT OR EPA ID NUMBER: Enter the well identification number or permit number assigned to the well by the EPA or the permitting authority.

API NUMBER: Enter the number assigned by the local jurisdiction (usually a State Oil and Gas Agency) using the American Petroleum Institute standard numbering system.

FULL WELL NAME: Enter the full name of the well or project.

Enter the **STATE** and **COUNTY** where the well is located. For States that do not have counties, use the name of that State's equivalent jurisdiction at a more local level.

WELL LOCATION: Fill in the complete township, range, and section to the nearest quarter-quarter section. A township is north or south of the baseline, and a range is east or west of the principal meridian (e.g., T12N, R34W). Also include the distance, in feet, from the nearest north or south line and nearest east or west line of the quarter-section. Also, enter the **latitude** and **longitude** of the well in decimal degrees, to five or six places if possible; be sure to include a negative sign for the longitude of a well in the Western Hemisphere and a negative sign for the latitude of a well in the Southern Hemisphere.

Enter the **WELL CLASS,** i.e., the class of injection well as defined in 40 CFR 144.6.

TIMING OF THE ACTION: Check ***Notice prior to work*** if the activity has not yet occurred (i.e., is planned). Check ***Report after work*** if the activity described has already occurred. As appropriate, include the date the activity is expected to start or the date the activity was completed. (Note this may not be available, e.g., for a plugging plan submitted with a permit application.)

TYPE OF ACTION: Check the appropriate box to describe the kind of activity being reported. Check ***Well Rework*** for work that was/will be performed on the well after it has already been in operation as an injection well. Check ***Plugging and Abandonment*** to report on plans for or descriptions of final closure/plugging after use as an injection well. Check ***Conversion to a Non-Injection Well*** if the well is to be converted to something other than an injection well.

Provide a **NARRATIVE DESCRIPTION** of the work planned to be performed, or that was performed. The narrative should include a description of the main procedures planned or that occurred during the work activity. A service company report, daily report, or similar document may be attached if it includes all the requested information and is clear and legible.

For well reworks, include the following information: The reason for the well rework; depths of activity; type of activity; changes to injection well configuration, well casing, or cement behind casing; any plug added to the well and its depth; any newly drilled interval and its depth; method(s) to demonstrate that the well has mechanical integrity (as applicable); and any deviations from the approved rework plan (as applicable).

For a well plugging plan, include the following information: Reason for the well plugging; number of plugs placed, and their depths; materials used as plugs (e.g., cast iron bridge plug, cement, cement retainer); method to set plugs; and wait-on-cement times, if any. Also provide one or more cost estimates from an independent firm in the business of plugging and abandoning wells to plug the well as described in the plan.

For well plugging affidavit, include the following information: Reason for the well plugging; number of plugs placed, and their depths; materials used as plugs (e.g., cast iron bridge plug, cement, cement retainer); method to set plugs; wait-on-cement times, if any; and any deviations from the approved plugging plan (if applicable).

For conversion to a non-injection well, include the following information: Depths of activity; type of activity; changes to injection well configuration, well casing, or cement behind casing; any plug added to the well and its depth; any newly drilled interval and its depth; depths of new perforations; and method(s) to demonstrate that the well has mechanical integrity (as applicable).

For all of the above activities, include a well sketch depicting the work, results of well tests/logging performed, service company tickets, and any other available information demonstrating how the work was/is to be performed. Also, specify whether depths are below ground surface, relative to Kelly bushing, etc.

CERTIFICATION: This form must be signed and dated by either: a responsible corporate officer for a corporation, by a general partner for a partnership, by the proprietor of a sole proprietorship, or by a principal executive or ranking elected official for a public agency.

PAPERWORK REDUCTION ACT NOTICE: The public reporting and recordkeeping burden for this collection of information is estimated to average between 6.0 and 7.9 hours per response, depending on the injection well class. Burden means the total time, effort, or financial resource expended by persons to generate, maintain, retain, or disclose or provide information to or for a Federal Agency. This includes the time needed to review instructions; develop, acquire, install, and utilize technology and systems for the purposes of collecting, validating, and verifying information, processing and maintaining information, and disclosing and providing information; adjust the existing ways to comply with any previously applicable instructions and requirements; train personnel to be able to respond to the collection of information; search data sources; complete and review the collection of information; and, transmit or otherwise disclose the information. An agency may not conduct or sponsor, and a person is not required to respond to, a collection of information unless it displays a currently valid OMB control number. Send comments on the Agency's need for this information, the accuracy of the provided burden estimates, and any suggested methods for minimizing respondent burden, including the use of automated collection techniques to Director, Collection Strategies Division, U.S. Environmental Protection Agency (2822), 1200 Pennsylvania Ave., NW., Washington, D.C. 20460. Include the OMB control number in any correspondence. Do not send the completed forms to this address.

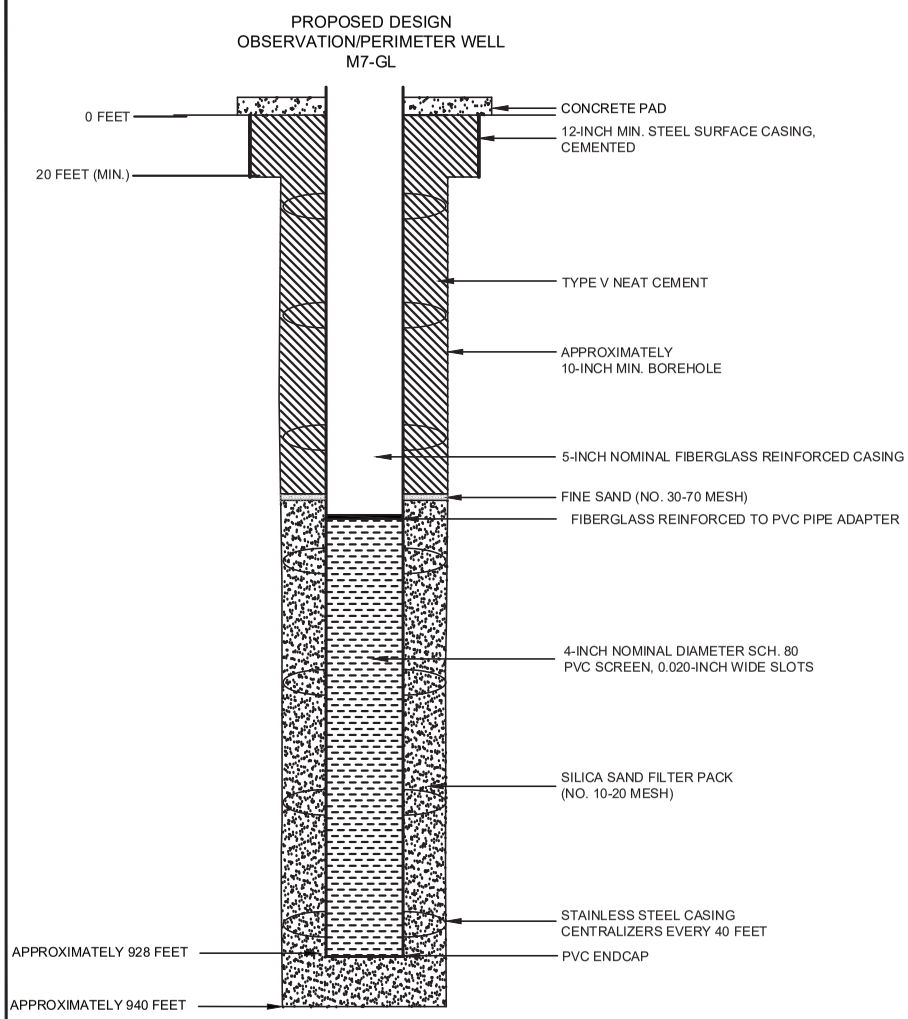

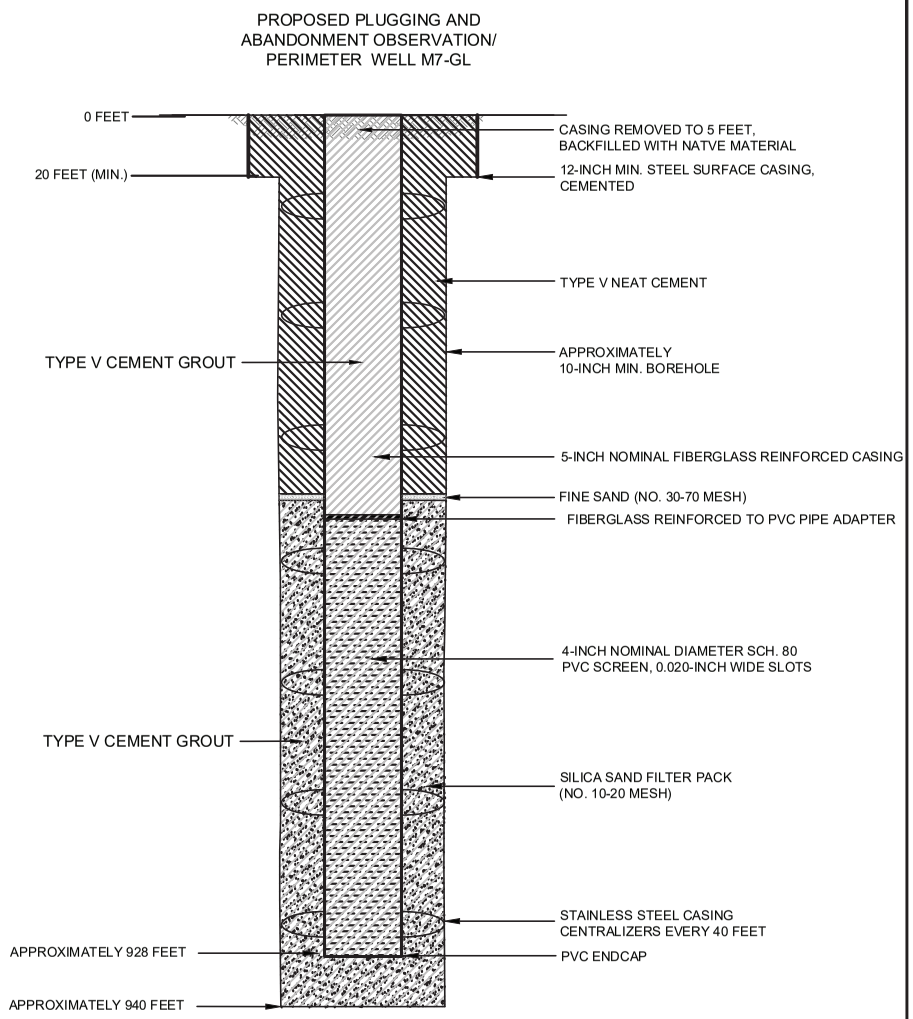

NOTES

1. WELL DESIGN DETAILS ARE BASED ON CORE HOLE AND WELL LOG RECORDS.

HALEY ALDRICH

FLORENCE COPPER, INC.
FLORENCE, ARIZONA

ABANDONMENT SCHEMATIC
OBSERVATION/PERIMETER
WELL M7-GL

SEPTEMBER 2019
SCALE: AS SHOWN

FIGURE 1

OMB No. 2040-0042 Approval Expires 4/30/2022

United States Environmental Protection Agency

WELL REWORK RECORD, PLUGGING AND ABANDONMENT PLAN, OR PLUGGING AND ABANDONMENT AFFIDAVIT

Name and Address, Phone Number and/or Email of Permittee

Florence Copper Project
1575 W Hunt Hwy,
Florence, AZ 85132

Permit or EPA ID Number	API Number	Full Well Name
R9UIC-AZ3-FY11-1		M8-O

State	County
Arizona	Pinal

Locate well in two directions from nearest lines of quarter section and drilling unit

Latitude 33.05409613

Longitude -111.4361414

Surface Location

SW **1/4 of** NW **1/4 of Section** 28 **Township** 4S **Range** 9E

_____ **ft. from (N/S)** _____ **Line of quarter section**

_____ **ft. from (E/W)** _____ **Line of quarter section.**

Well Class	Timing of Action (pick one)	Type of Action (pick one)
☐ Class I ☐ Class II ☑ Class III ☐ Class V	☑ Notice Prior to Work Date Expected to Commence March 2021 ☐ Report After Work Date Work Ended	☐ Well Rework ☑ Plugging and Abandonment ☐ Conversion to a Non-Injection Well

Provide a narrative description of the work planned to be performed, or that was performed. Use additional pages as necessary. See instructions.

A workover rig capable of performing the required abandonment operations at the required depths will be moved in and set up over the well. The well casing will be inspected to determine the depth to which the well remains open and if any obstructions are present in the casing; the presence and condition of any existing surface casing will also be documented. If necessary, the well casing will be cleaned out to the bottom of the deepest screen or perforation to enable placement of cement seals.

If surface casing is present, an attempt will be made to remove it. If removal of the surface casing is not feasible, it will be left in the hole and perforated as needed to allow an annular seal to be placed to a depth of at least 25 feet bgs. In areas of agricultural use, the surface casing will be cut at least 5 feet bgs and removed.

If the surface casing cannot be removed, it will be perforated from at least 20 feet below the bedrock-LBFU contact to at least 20 feet above the contact; from at least 20 feet below the base of the MFGU to at least 20 feet above the top of the MFGU; and from at least 25 feet bgs to 5 feet bgs.

A tremie pipe will be used to place Type V cement in the open well from the bottom of the well casing to the top of the well casing. Cement retainers, as described above, will be used to force cement grout into the annulus and behind perforated screen intervals, as necessary.

If the well casing has been obstructed, as much cement as possible will be placed from 100 feet below the LBFU-bedrock contact to the top of the casing.

The volume of Type V cement will be recorded and will not be less than the estimated volume of material required to fill each interval. All cement grout will consist of Type V cement, or equivalent approved in accordance with the UIC Permit.

Certification

I certify under the penalty of law that I have personally examined and am familiar with the information submitted in this document and all attachments and that, based on my inquiry of those individuals immediately responsible for obtaining the information, I believe that the information is true, accurate, and complete. I am aware that there are significant penalties for submitting false information, including the possibliity of fine and imprisonment. (Ref. 40 CFR § 144.32)

Name and Official Title *(Please type or print)*	Signature	Date Signed
Dan Johnson, VP - General Manager		10/3/2019

INSTRUCTIONS FOR FORM 7520-19

This form replaces forms 7520-12 and 7520-14. Use this form only when work is planned or has occurred that affects the well's construction or operation as an injection well, including work on the casing, tubing or packer (or for shallow Class V wells, the subsurface fluid emplacement network). Use one form per injection well. While reports or other information developed by contractors or service companies may be attached, this form must be signed by a responsible entity as described at 40 CFR 144.32. Note: operators closing Class V wells should use Form 7520-17.

NAME, ADDRESS, PHONE AND/OR EMAIL OF PERMITTEE: Enter the name and street address, city/town, state, and ZIP code of the permittee. Also provide an email address (if available) and/or a phone number.

PERMIT OR EPA ID NUMBER: Enter the well identification number or permit number assigned to the well by the EPA or the permitting authority.

API NUMBER: Enter the number assigned by the local jurisdiction (usually a State Oil and Gas Agency) using the American Petroleum Institute standard numbering system.

FULL WELL NAME: Enter the full name of the well or project.

Enter the **STATE** and **COUNTY** where the well is located. For States that do not have counties, use the name of that State's equivalent jurisdiction at a more local level.

WELL LOCATION: Fill in the complete township, range, and section to the nearest quarter-quarter section. A township is north or south of the baseline, and a range is east or west of the principal meridian (e.g., T12N, R34W). Also include the distance, in feet, from the nearest north or south line and nearest east or west line of the quarter-section. Also, enter the **latitude** and **longitude** of the well in decimal degrees, to five or six places if possible; be sure to include a negative sign for the longitude of a well in the Western Hemisphere and a negative sign for the latitude of a well in the Southern Hemisphere.

Enter the **WELL CLASS,** i.e., the class of injection well as defined in 40 CFR 144.6.

TIMING OF THE ACTION: Check ***Notice prior to work*** if the activity has not yet occurred (i.e., is planned). Check ***Report after work*** if the activity described has already occurred. As appropriate, include the date the activity is expected to start or the date the activity was completed. (Note this may not be available, e.g., for a plugging plan submitted with a permit application.)

TYPE OF ACTION: Check the appropriate box to describe the kind of activity being reported. Check ***Well Rework*** for work that was/will be performed on the well after it has already been in operation as an injection well. Check ***Plugging and Abandonment*** to report on plans for or descriptions of final closure/plugging after use as an injection well. Check ***Conversion to a Non-Injection Well*** if the well is to be converted to something other than an injection well.

Provide a **NARRATIVE DESCRIPTION** of the work planned to be performed, or that was performed. The narrative should include a description of the main procedures planned or that occurred during the work activity. A service company report, daily report, or similar document may be attached if it includes all the requested information and is clear and legible.

For well reworks, include the following information: The reason for the well rework; depths of activity; type of activity; changes to injection well configuration, well casing, or cement behind casing; any plug added to the well and its depth; any newly drilled interval and its depth; method(s) to demonstrate that the well has mechanical integrity (as applicable); and any deviations from the approved rework plan (as applicable).

For a well plugging plan, include the following information: Reason for the well plugging; number of plugs placed, and their depths; materials used as plugs (e.g., cast iron bridge plug, cement, cement retainer); method to set plugs; and wait-on-cement times, if any. Also provide one or more cost estimates from an independent firm in the business of plugging and abandoning wells to plug the well as described in the plan.

For well plugging affidavit, include the following information: Reason for the well plugging; number of plugs placed, and their depths; materials used as plugs (e.g., cast iron bridge plug, cement, cement retainer); method to set plugs; wait-on-cement times, if any; and any deviations from the approved plugging plan (if applicable).

For conversion to a non-injection well, include the following information: Depths of activity; type of activity; changes to injection well configuration, well casing, or cement behind casing; any plug added to the well and its depth; any newly drilled interval and its depth; depths of new perforations; and method(s) to demonstrate that the well has mechanical integrity (as applicable).

For all of the above activities, include a well sketch depicting the work, results of well tests/logging performed, service company tickets, and any other available information demonstrating how the work was/is to be performed. Also, specify whether depths are below ground surface, relative to Kelly bushing, etc.

CERTIFICATION: This form must be signed and dated by either: a responsible corporate officer for a corporation, by a general partner for a partnership, by the proprietor of a sole proprietorship, or by a principal executive or ranking elected official for a public agency.

PAPERWORK REDUCTION ACT NOTICE: The public reporting and recordkeeping burden for this collection of information is estimated to average between 6.0 and 7.9 hours per response, depending on the injection well class. Burden means the total time, effort, or financial resource expended by persons to generate, maintain, retain, or disclose or provide information to or for a Federal Agency. This includes the time needed to review instructions; develop, acquire, install, and utilize technology and systems for the purposes of collecting, validating, and verifying information, processing and maintaining information, and disclosing and providing information; adjust the existing ways to comply with any previously applicable instructions and requirements; train personnel to be able to respond to the collection of information; search data sources; complete and review the collection of information; and, transmit or otherwise disclose the information. An agency may not conduct or sponsor, and a person is not required to respond to, a collection of information unless it displays a currently valid OMB control number. Send comments on the Agency's need for this information, the accuracy of the provided burden estimates, and any suggested methods for minimizing respondent burden, including the use of automated collection techniques to Director, Collection Strategies Division, U.S. Environmental Protection Agency (2822), 1200 Pennsylvania Ave., NW., Washington, D.C. 20460. Include the OMB control number in any correspondence. Do not send the completed forms to this address.

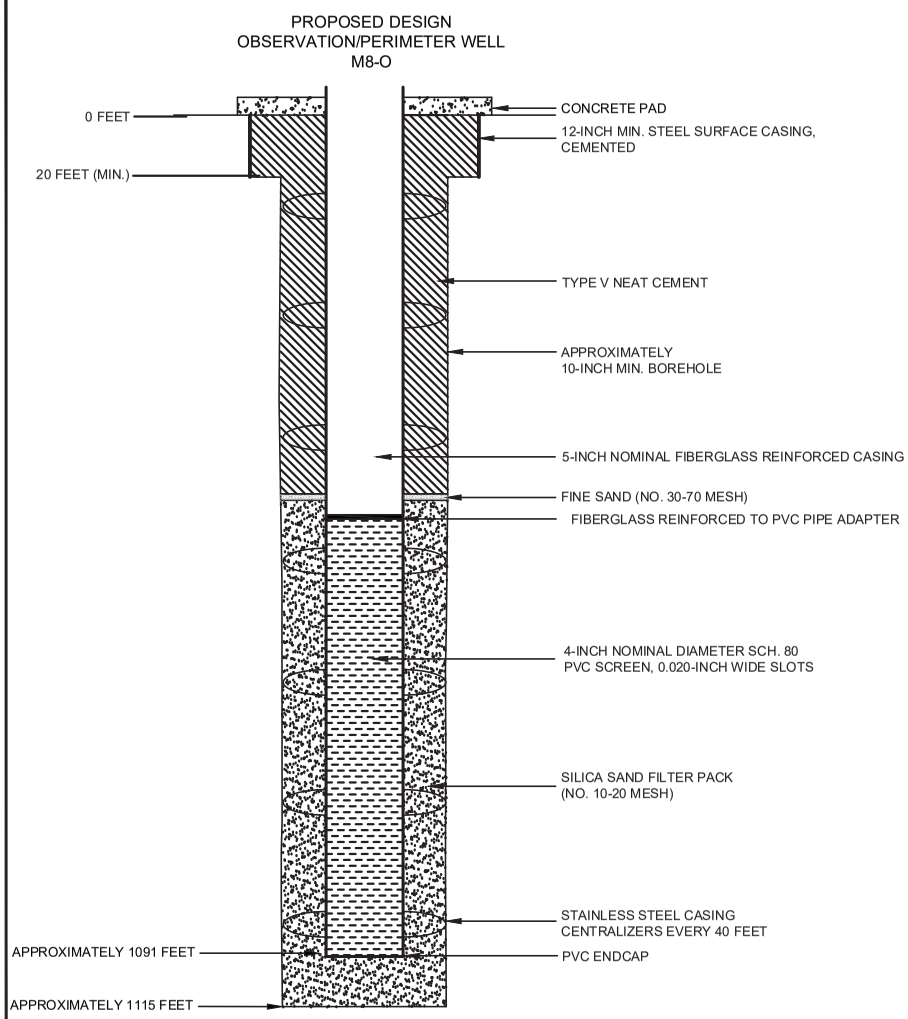

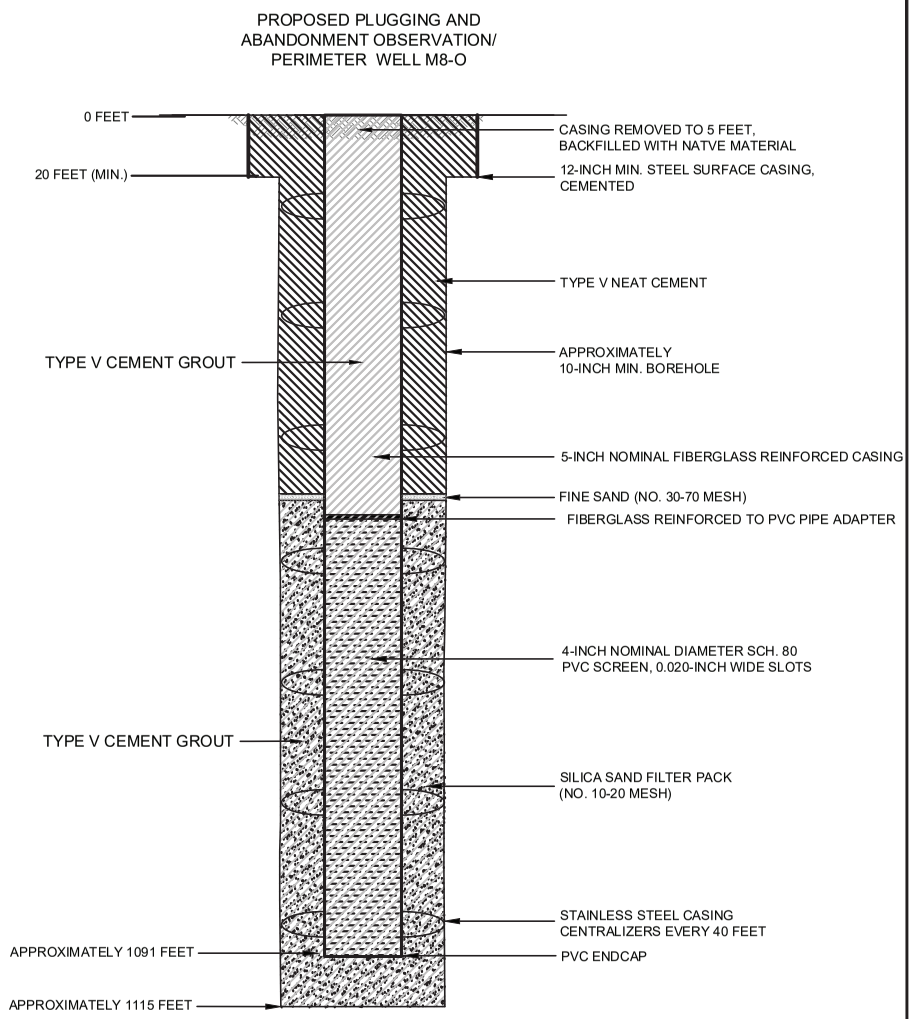

NOTES

1. WELL DESIGN DETAILS ARE BASED ON CORE HOLE AND WELL LOG RECORDS.

HALEY ALDRICH

FLORENCE COPPER, INC.
FLORENCE, ARIZONA

ABANDONMENT SCHEMATIC
OBSERVATION/PERIMETER
WELL M8-O

SEPTEMBER 2019
SCALE: AS SHOWN

FIGURE 1

OMB No. 2040-0042 Approval Expires 4/30/2022

United States Environmental Protection Agency

WELL REWORK RECORD, PLUGGING AND ABANDONMENT PLAN, OR PLUGGING AND ABANDONMENT AFFIDAVIT

Name and Address, Phone Number and/or Email of Permittee

Florence Copper Project
1575 W Hunt Hwy,
Florence, AZ 85132

Permit or EPA ID Number	API Number	Full Well Name
R9UIC-AZ3-FY11-1		M9-S

State	County
Arizona	Pinal

Locate well in two directions from nearest lines of quarter section and drilling unit

Latitude 33.05418464

Longitude -111.4362154

Surface Location

SW **1/4 of** NW **1/4 of Section** 28 **Township** 4S **Range** 9E

_____ **ft. from (N/S)** _____ **Line of quarter section**

_____ **ft. from (E/W)** _____ **Line of quarter section.**

Well Class	Timing of Action (pick one)	Type of Action (pick one)
☐ Class I ☐ Class II ☑ Class III ☐ Class V	☑ Notice Prior to Work Date Expected to Commence March 2021 ☐ Report After Work Date Work Ended	☐ Well Rework ☑ Plugging and Abandonment ☐ Conversion to a Non-Injection Well

Provide a narrative description of the work planned to be performed, or that was performed. Use additional pages as necessary. See instructions.

A workover rig capable of performing the required abandonment operations at the required depths will be moved in and set up over the well. The well casing will be inspected to determine the depth to which the well remains open and if any obstructions are present in the casing; the presence and condition of any existing surface casing will also be documented. If necessary, the well casing will be cleaned out to the bottom of the deepest screen or perforation to enable placement of cement seals.

If surface casing is present, an attempt will be made to remove it. If removal of the surface casing is not feasible, it will be left in the hole and perforated as needed to allow an annular seal to be placed to a depth of at least 25 feet bgs. In areas of agricultural use, the surface casing will be cut at least 5 feet bgs and removed.

If the surface casing cannot be removed, it will be perforated from at least 20 feet below the bedrock-LBFU contact to at least 20 feet above the contact; from at least 20 feet below the base of the MFGU to at least 20 feet above the top of the MFGU; and from at least 25 feet bgs to 5 feet bgs.

A tremie pipe will be used to place Type V cement in the open well from the bottom of the well casing to the top of the well casing. Cement retainers, as described above, will be used to force cement grout into the annulus and behind perforated screen intervals, as necessary.

If the well casing has been obstructed, as much cement as possible will be placed from 100 feet below the LBFU-bedrock contact to the top of the casing.

The volume of Type V cement will be recorded and will not be less than the estimated volume of material required to fill each interval. All cement grout will consist of Type V cement, or equivalent approved in accordance with the UIC Permit.

Certification

I certify under the penalty of law that I have personally examined and am familiar with the information submitted in this document and all attachments and that, based on my inquiry of those individuals immediately responsible for obtaining the information, I believe that the information is true, accurate, and complete. I am aware that there are significant penalties for submitting false information, including the possibliity of fine and imprisonment. (Ref. 40 CFR § 144.32)

Name and Official Title *(Please type or print)*	Signature	Date Signed
Dan Johnson, VP - General Manager		10/3/2019

INSTRUCTIONS FOR FORM 7520-19

This form replaces forms 7520-12 and 7520-14. Use this form only when work is planned or has occurred that affects the well's construction or operation as an injection well, including work on the casing, tubing or packer (or for shallow Class V wells, the subsurface fluid emplacement network). Use one form per injection well. While reports or other information developed by contractors or service companies may be attached, this form must be signed by a responsible entity as described at 40 CFR 144.32. Note: operators closing Class V wells should use Form 7520-17.

NAME, ADDRESS, PHONE AND/OR EMAIL OF PERMITTEE: Enter the name and street address, city/town, state, and ZIP code of the permittee. Also provide an email address (if available) and/or a phone number.

PERMIT OR EPA ID NUMBER: Enter the well identification number or permit number assigned to the well by the EPA or the permitting authority.

API NUMBER: Enter the number assigned by the local jurisdiction (usually a State Oil and Gas Agency) using the American Petroleum Institute standard numbering system.

FULL WELL NAME: Enter the full name of the well or project.

Enter the **STATE** and **COUNTY** where the well is located. For States that do not have counties, use the name of that State's equivalent jurisdiction at a more local level.

WELL LOCATION: Fill in the complete township, range, and section to the nearest quarter-quarter section. A township is north or south of the baseline, and a range is east or west of the principal meridian (e.g., T12N, R34W). Also include the distance, in feet, from the nearest north or south line and nearest east or west line of the quarter-section. Also, enter the **latitude** and **longitude** of the well in decimal degrees, to five or six places if possible; be sure to include a negative sign for the longitude of a well in the Western Hemisphere and a negative sign for the latitude of a well in the Southern Hemisphere.

Enter the **WELL CLASS,** i.e., the class of injection well as defined in 40 CFR 144.6.

TIMING OF THE ACTION: Check ***Notice prior to work*** if the activity has not yet occurred (i.e., is planned). Check ***Report after work*** if the activity described has already occurred. As appropriate, include the date the activity is expected to start or the date the activity was completed. (Note this may not be available, e.g., for a plugging plan submitted with a permit application.)

TYPE OF ACTION: Check the appropriate box to describe the kind of activity being reported. Check ***Well Rework*** for work that was/will be performed on the well after it has already been in operation as an injection well. Check ***Plugging and Abandonment*** to report on plans for or descriptions of final closure/plugging after use as an injection well. Check ***Conversion to a Non-Injection Well*** if the well is to be converted to something other than an injection well.

Provide a **NARRATIVE DESCRIPTION** of the work planned to be performed, or that was performed. The narrative should include a description of the main procedures planned or that occurred during the work activity. A service company report, daily report, or similar document may be attached if it includes all the requested information and is clear and legible.

For well reworks, include the following information: The reason for the well rework; depths of activity; type of activity; changes to injection well configuration, well casing, or cement behind casing; any plug added to the well and its depth; any newly drilled interval and its depth; method(s) to demonstrate that the well has mechanical integrity (as applicable); and any deviations from the approved rework plan (as applicable).

For a well plugging plan, include the following information: Reason for the well plugging; number of plugs placed, and their depths; materials used as plugs (e.g., cast iron bridge plug, cement, cement retainer); method to set plugs; and wait-on-cement times, if any. Also provide one or more cost estimates from an independent firm in the business of plugging and abandoning wells to plug the well as described in the plan.

For well plugging affidavit, include the following information: Reason for the well plugging; number of plugs placed, and their depths; materials used as plugs (e.g., cast iron bridge plug, cement, cement retainer); method to set plugs; wait-on-cement times, if any; and any deviations from the approved plugging plan (if applicable).

For conversion to a non-injection well, include the following information: Depths of activity; type of activity; changes to injection well configuration, well casing, or cement behind casing; any plug added to the well and its depth; any newly drilled interval and its depth; depths of new perforations; and method(s) to demonstrate that the well has mechanical integrity (as applicable).

For all of the above activities, include a well sketch depicting the work, results of well tests/logging performed, service company tickets, and any other available information demonstrating how the work was/is to be performed. Also, specify whether depths are below ground surface, relative to Kelly bushing, etc.

CERTIFICATION: This form must be signed and dated by either: a responsible corporate officer for a corporation, by a general partner for a partnership, by the proprietor of a sole proprietorship, or by a principal executive or ranking elected official for a public agency.

PAPERWORK REDUCTION ACT NOTICE: The public reporting and recordkeeping burden for this collection of information is estimated to average between 6.0 and 7.9 hours per response, depending on the injection well class. Burden means the total time, effort, or financial resource expended by persons to generate, maintain, retain, or disclose or provide information to or for a Federal Agency. This includes the time needed to review instructions; develop, acquire, install, and utilize technology and systems for the purposes of collecting, validating, and verifying information, processing and maintaining information, and disclosing and providing information; adjust the existing ways to comply with any previously applicable instructions and requirements; train personnel to be able to respond to the collection of information; search data sources; complete and review the collection of information; and, transmit or otherwise disclose the information. An agency may not conduct or sponsor, and a person is not required to respond to, a collection of information unless it displays a currently valid OMB control number. Send comments on the Agency's need for this information, the accuracy of the provided burden estimates, and any suggested methods for minimizing respondent burden, including the use of automated collection techniques to Director, Collection Strategies Division, U.S. Environmental Protection Agency (2822), 1200 Pennsylvania Ave., NW., Washington, D.C. 20460. Include the OMB control number in any correspondence. Do not send the completed forms to this address.

Saved by: MNICHOLLS Printed: 7/25/2019 7:20 PM Sheet: HA-FIG-A-L(2)
\\HALEYALDRICH.COM\SHARE\PHX_COMMON\PROJECTS\FLORENCE COPPER\132473 FLORENCE GROUNDWATER PERMITTING\CAD\132473_000-OBSERVATION_WELL_CONSTRUCTION DIAGRAM.DWG

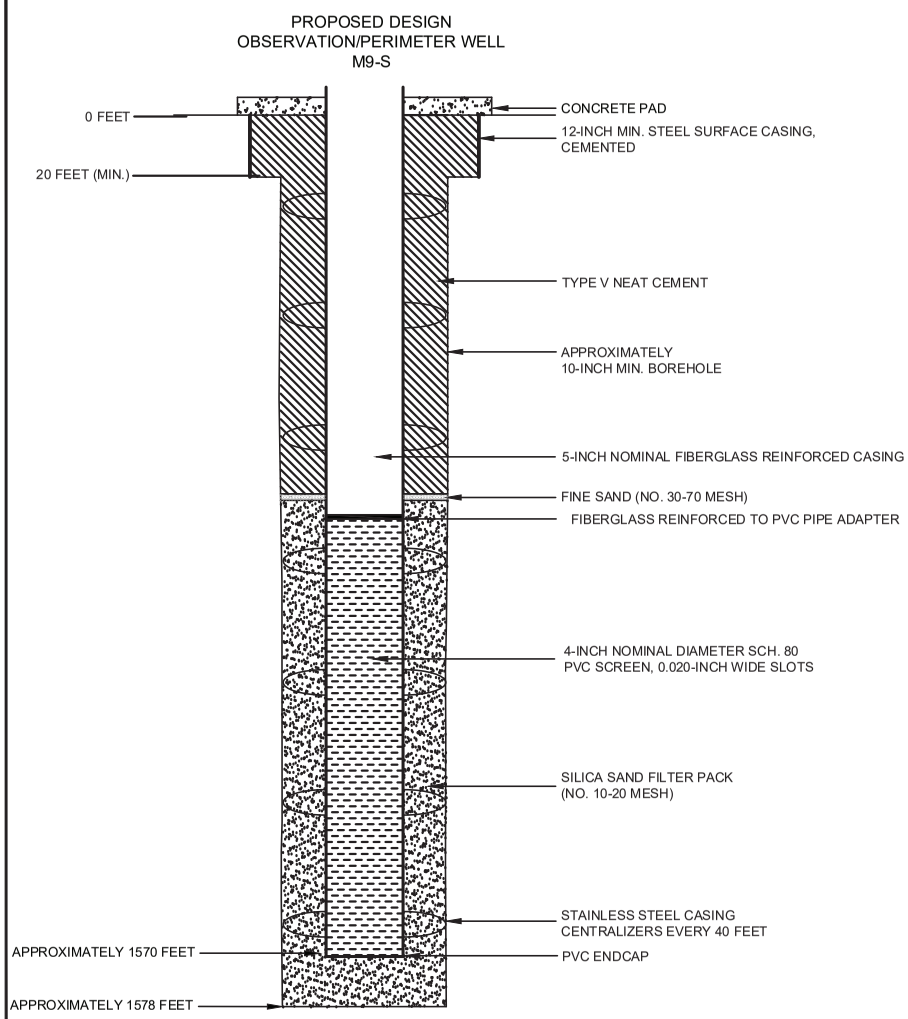

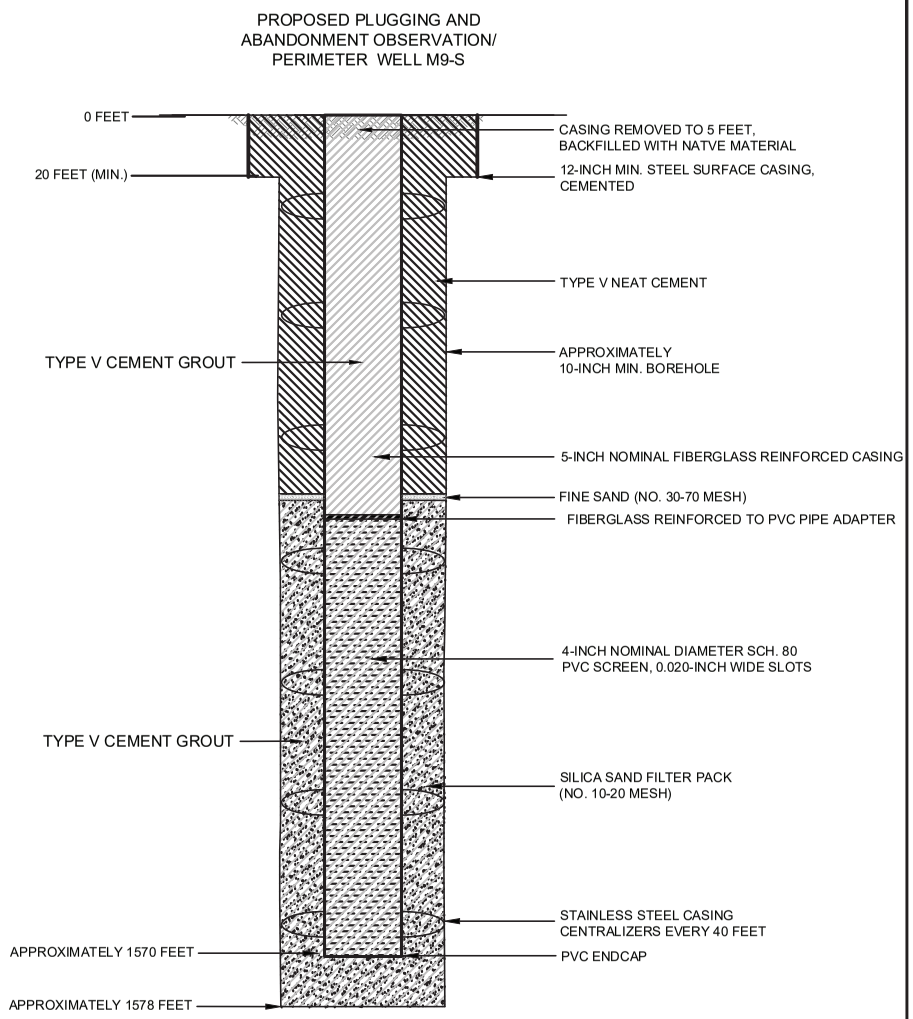

NOTES

1. WELL DESIGN DETAILS ARE BASED ON CORE HOLE AND WELL LOG RECORDS.

HALEY ALDRICH

FLORENCE COPPER, INC.
FLORENCE, ARIZONA

ABANDONMENT SCHEMATIC
OBSERVATION/PERIMETER
WELL M9-S

SEPTEMBER 2019
SCALE: AS SHOWN

FIGURE 1

OMB No. 2040-0042 Approval Expires 4/30/2022

United States Environmental Protection Agency

WELL REWORK RECORD, PLUGGING AND ABANDONMENT PLAN, OR PLUGGING AND ABANDONMENT AFFIDAVIT

Name and Address, Phone Number and/or Email of Permittee

Florence Copper Project
1575 W Hunt Hwy,
Florence, AZ 85132

Permit or EPA ID Number	API Number	Full Well Name
R9UIC-AZ3-FY11-1		M10-GU

State	County
Arizona	Pinal

Locate well in two directions from nearest lines of quarter section and drilling unit

Latitude 33.04841171

Longitude -111.4277919

Surface Location

SW **1/4 of** SE **1/4 of Section** 28 **Township** 4S **Range** 9E

_____ **ft. from (N/S)** _____ **Line of quarter section**

_____ **ft. from (E/W)** _____ **Line of quarter section.**

Well Class	Timing of Action (pick one)	Type of Action (pick one)
☐ Class I ☐ Class II ☑ Class III ☐ Class V	☑ Notice Prior to Work Date Expected to Commence March 2021 ☐ Report After Work Date Work Ended	☐ Well Rework ☑ Plugging and Abandonment ☐ Conversion to a Non-Injection Well

Provide a narrative description of the work planned to be performed, or that was performed. Use additional pages as necessary. See instructions.

A workover rig capable of performing the required abandonment operations at the required depths will be moved in and set up over the well. The well casing will be inspected to determine the depth to which the well remains open and if any obstructions are present in the casing; the presence and condition of any existing surface casing will also be documented. If necessary, the well casing will be cleaned out to the bottom of the deepest screen or perforation to enable placement of cement seals.

If surface casing is present, an attempt will be made to remove it. If removal of the surface casing is not feasible, it will be left in the hole and perforated as needed to allow an annular seal to be placed to a depth of at least 25 feet bgs. In areas of agricultural use, the surface casing will be cut at least 5 feet bgs and removed.

If the surface casing cannot be removed, it will be perforated from at least 20 feet below the bedrock-LBFU contact to at least 20 feet above the contact; from at least 20 feet below the base of the MFGU to at least 20 feet above the top of the MFGU; and from at least 25 feet bgs to 5 feet bgs.

A tremie pipe will be used to place Type V cement in the open well from the bottom of the well casing to the top of the well casing. Cement retainers, as described above, will be used to force cement grout into the annulus and behind perforated screen intervals, as necessary.

If the well casing has been obstructed, as much cement as possible will be placed from 100 feet below the LBFU-bedrock contact to the top of the casing.

The volume of Type V cement will be recorded and will not be less than the estimated volume of material required to fill each interval. All cement grout will consist of Type V cement, or equivalent approved in accordance with the UIC Permit.

Certification

I certify under the penalty of law that I have personally examined and am familiar with the information submitted in this document and all attachments and that, based on my inquiry of those individuals immediately responsible for obtaining the information, I believe that the information is true, accurate, and complete. I am aware that there are significant penalties for submitting false information, including the possibliity of fine and imprisonment. (Ref. 40 CFR § 144.32)

Name and Official Title *(Please type or print)*	Signature	Date Signed
Dan Johnson, VP - General Manager		10/3/2019

INSTRUCTIONS FOR FORM 7520-19

This form replaces forms 7520-12 and 7520-14. Use this form only when work is planned or has occurred that affects the well's construction or operation as an injection well, including work on the casing, tubing or packer (or for shallow Class V wells, the subsurface fluid emplacement network). Use one form per injection well. While reports or other information developed by contractors or service companies may be attached, this form must be signed by a responsible entity as described at 40 CFR 144.32. Note: operators closing Class V wells should use Form 7520-17.

NAME, ADDRESS, PHONE AND/OR EMAIL OF PERMITTEE: Enter the name and street address, city/town, state, and ZIP code of the permittee. Also provide an email address (if available) and/or a phone number.

PERMIT OR EPA ID NUMBER: Enter the well identification number or permit number assigned to the well by the EPA or the permitting authority.

API NUMBER: Enter the number assigned by the local jurisdiction (usually a State Oil and Gas Agency) using the American Petroleum Institute standard numbering system.

FULL WELL NAME: Enter the full name of the well or project.

Enter the **STATE** and **COUNTY** where the well is located. For States that do not have counties, use the name of that State's equivalent jurisdiction at a more local level.

WELL LOCATION: Fill in the complete township, range, and section to the nearest quarter-quarter section. A township is north or south of the baseline, and a range is east or west of the principal meridian (e.g., T12N, R34W). Also include the distance, in feet, from the nearest north or south line and nearest east or west line of the quarter-section. Also, enter the **latitude** and **longitude** of the well in decimal degrees, to five or six places if possible; be sure to include a negative sign for the longitude of a well in the Western Hemisphere and a negative sign for the latitude of a well in the Southern Hemisphere.

Enter the **WELL CLASS,** i.e., the class of injection well as defined in 40 CFR 144.6.

TIMING OF THE ACTION: Check ***Notice prior to work*** if the activity has not yet occurred (i.e., is planned). Check ***Report after work*** if the activity described has already occurred. As appropriate, include the date the activity is expected to start or the date the activity was completed. (Note this may not be available, e.g., for a plugging plan submitted with a permit application.)

TYPE OF ACTION: Check the appropriate box to describe the kind of activity being reported. Check ***Well Rework*** for work that was/will be performed on the well after it has already been in operation as an injection well. Check ***Plugging and Abandonment*** to report on plans for or descriptions of final closure/plugging after use as an injection well. Check ***Conversion to a Non-Injection Well*** if the well is to be converted to something other than an injection well.

Provide a **NARRATIVE DESCRIPTION** of the work planned to be performed, or that was performed. The narrative should include a description of the main procedures planned or that occurred during the work activity. A service company report, daily report, or similar document may be attached if it includes all the requested information and is clear and legible.

For well reworks, include the following information: The reason for the well rework; depths of activity; type of activity; changes to injection well configuration, well casing, or cement behind casing; any plug added to the well and its depth; any newly drilled interval and its depth; method(s) to demonstrate that the well has mechanical integrity (as applicable); and any deviations from the approved rework plan (as applicable).

For a well plugging plan, include the following information: Reason for the well plugging; number of plugs placed, and their depths; materials used as plugs (e.g., cast iron bridge plug, cement, cement retainer); method to set plugs; and wait-on-cement times, if any. Also provide one or more cost estimates from an independent firm in the business of plugging and abandoning wells to plug the well as described in the plan.

For well plugging affidavit, include the following information: Reason for the well plugging; number of plugs placed, and their depths; materials used as plugs (e.g., cast iron bridge plug, cement, cement retainer); method to set plugs; wait-on-cement times, if any; and any deviations from the approved plugging plan (if applicable).

For conversion to a non-injection well, include the following information: Depths of activity; type of activity; changes to injection well configuration, well casing, or cement behind casing; any plug added to the well and its depth; any newly drilled interval and its depth; depths of new perforations; and method(s) to demonstrate that the well has mechanical integrity (as applicable).

For all of the above activities, include a well sketch depicting the work, results of well tests/logging performed, service company tickets, and any other available information demonstrating how the work was/is to be performed. Also, specify whether depths are below ground surface, relative to Kelly bushing, etc.

CERTIFICATION: This form must be signed and dated by either: a responsible corporate officer for a corporation, by a general partner for a partnership, by the proprietor of a sole proprietorship, or by a principal executive or ranking elected official for a public agency.

PAPERWORK REDUCTION ACT NOTICE: The public reporting and recordkeeping burden for this collection of information is estimated to average between 6.0 and 7.9 hours per response, depending on the injection well class. Burden means the total time, effort, or financial resource expended by persons to generate, maintain, retain, or disclose or provide information to or for a Federal Agency. This includes the time needed to review instructions; develop, acquire, install, and utilize technology and systems for the purposes of collecting, validating, and verifying information, processing and maintaining information, and disclosing and providing information; adjust the existing ways to comply with any previously applicable instructions and requirements; train personnel to be able to respond to the collection of information; search data sources; complete and review the collection of information; and, transmit or otherwise disclose the information. An agency may not conduct or sponsor, and a person is not required to respond to, a collection of information unless it displays a currently valid OMB control number. Send comments on the Agency's need for this information, the accuracy of the provided burden estimates, and any suggested methods for minimizing respondent burden, including the use of automated collection techniques to Director, Collection Strategies Division, U.S. Environmental Protection Agency (2822), 1200 Pennsylvania Ave., NW., Washington, D.C. 20460. Include the OMB control number in any correspondence. Do not send the completed forms to this address.

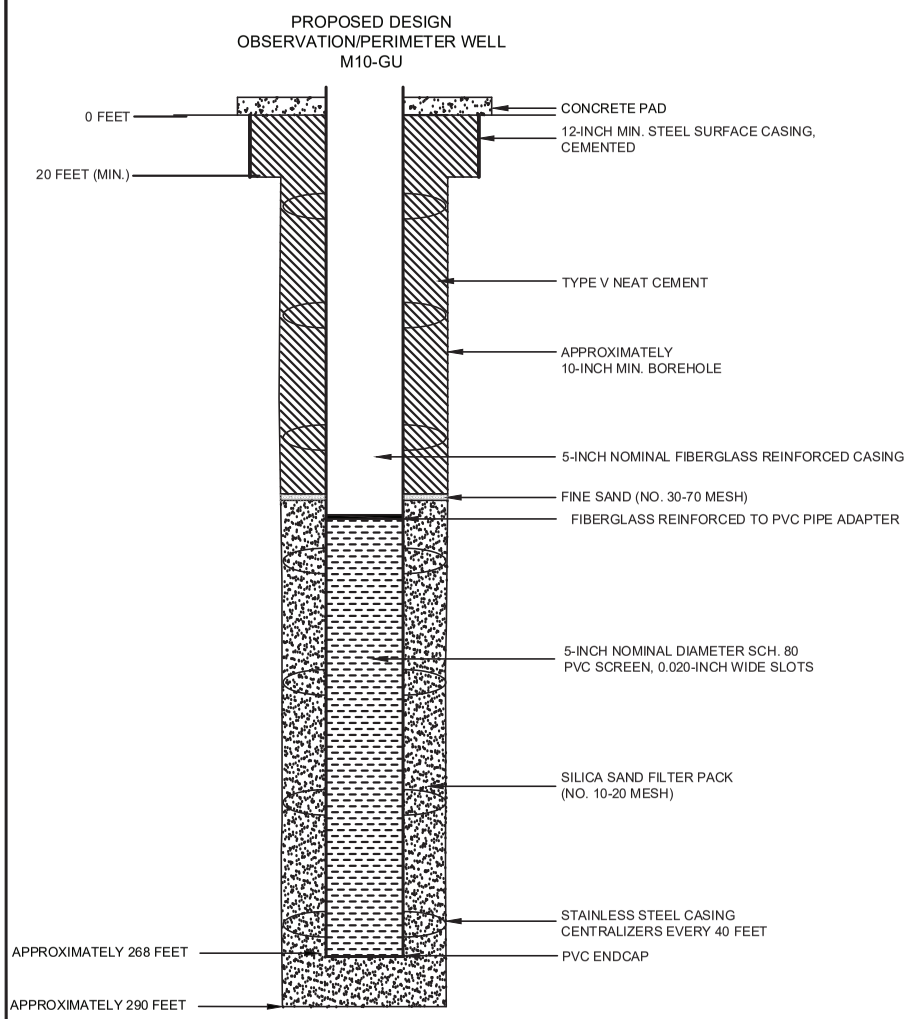

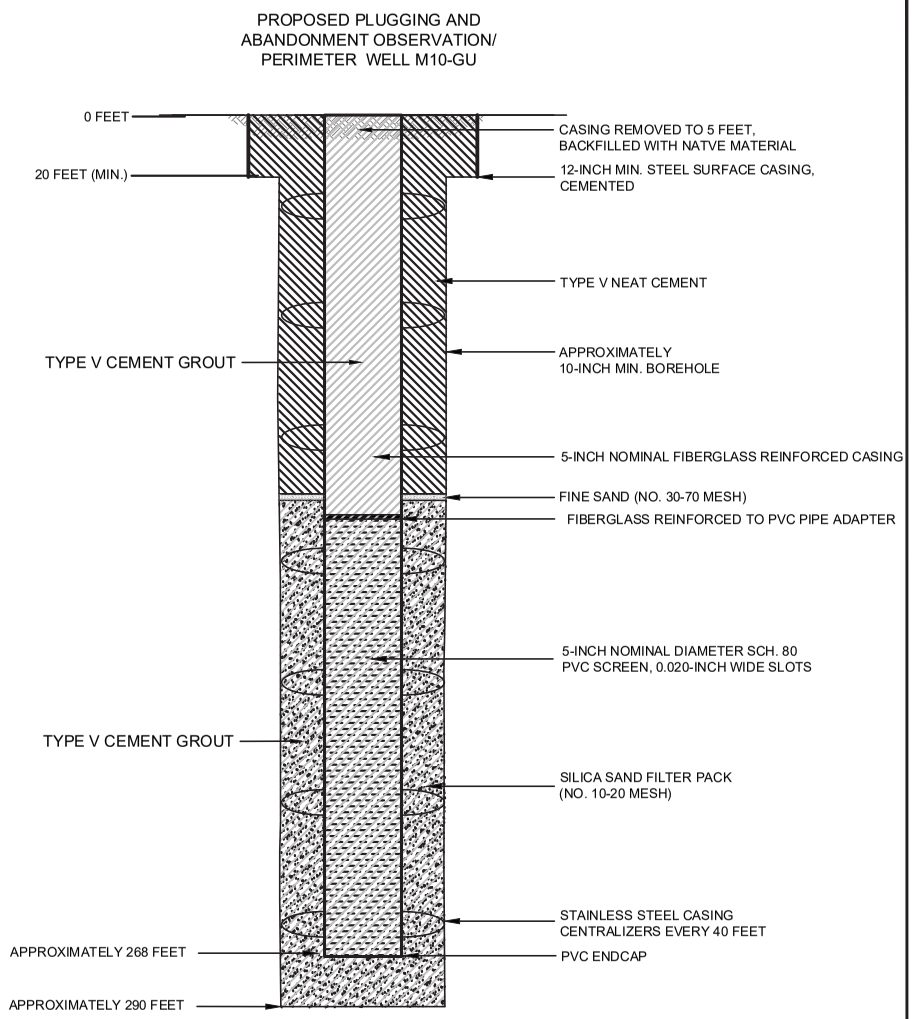

NOTES

1. WELL DESIGN DETAILS ARE BASED ON CORE HOLE AND WELL LOG RECORDS.

HALEY ALDRICH

FLORENCE COPPER, INC.
FLORENCE, ARIZONA

ABANDONMENT SCHEMATIC
OBSERVATION/PERIMETER
WELL M10-GU

SEPTEMBER 2019
SCALE: AS SHOWN

FIGURE 1

OMB No. 2040-0042 Approval Expires 4/30/2022

United States Environmental Protection Agency

WELL REWORK RECORD, PLUGGING AND ABANDONMENT PLAN, OR PLUGGING AND ABANDONMENT AFFIDAVIT

Name and Address, Phone Number and/or Email of Permittee

Florence Copper Project
1575 W Hunt Hwy,
Florence, AZ 85132

Permit or EPA ID Number	API Number	Full Well Name
R9UIC-AZ3-FY11-1		M11-GL

State	County
Arizona	Pinal

Locate well in two directions from nearest lines of quarter section and drilling unit

Latitude 33.04842387

Longitude -111.4279501

Surface Location

SW **1/4 of** SE **1/4 of Section** 28 **Township** 4S **Range** 9E

_____ **ft. from (N/S)** _____ **Line of quarter section**

_____ **ft. from (E/W)** _____ **Line of quarter section.**

Well Class	Timing of Action (pick one)	Type of Action (pick one)
☐ Class I ☐ Class II ☑ Class III ☐ Class V	☑ Notice Prior to Work Date Expected to Commence March 2021 ☐ Report After Work Date Work Ended	☐ Well Rework ☑ Plugging and Abandonment ☐ Conversion to a Non-Injection Well

Provide a narrative description of the work planned to be performed, or that was performed. Use additional pages as necessary. See instructions.

A workover rig capable of performing the required abandonment operations at the required depths will be moved in and set up over the well. The well casing will be inspected to determine the depth to which the well remains open and if any obstructions are present in the casing; the presence and condition of any existing surface casing will also be documented. If necessary, the well casing will be cleaned out to the bottom of the deepest screen or perforation to enable placement of cement seals.

If surface casing is present, an attempt will be made to remove it. If removal of the surface casing is not feasible, it will be left in the hole and perforated as needed to allow an annular seal to be placed to a depth of at least 25 feet bgs. In areas of agricultural use, the surface casing will be cut at least 5 feet bgs and removed.

If the surface casing cannot be removed, it will be perforated from at least 20 feet below the bedrock-LBFU contact to at least 20 feet above the contact; from at least 20 feet below the base of the MFGU to at least 20 feet above the top of the MFGU; and from at least 25 feet bgs to 5 feet bgs.

A tremie pipe will be used to place Type V cement in the open well from the bottom of the well casing to the top of the well casing. Cement retainers, as described above, will be used to force cement grout into the annulus and behind perforated screen intervals, as necessary.

If the well casing has been obstructed, as much cement as possible will be placed from 100 feet below the LBFU-bedrock contact to the top of the casing.

The volume of Type V cement will be recorded and will not be less than the estimated volume of material required to fill each interval. All cement grout will consist of Type V cement, or equivalent approved in accordance with the UIC Permit.

Certification

I certify under the penalty of law that I have personally examined and am familiar with the information submitted in this document and all attachments and that, based on my inquiry of those individuals immediately responsible for obtaining the information, I believe that the information is true, accurate, and complete. I am aware that there are significant penalties for submitting false information, including the possibliity of fine and imprisonment. (Ref. 40 CFR § 144.32)

Name and Official Title *(Please type or print)*	Signature	Date Signed
Dan Johnson, VP - General Manager		10/3/2019

INSTRUCTIONS FOR FORM 7520-19

This form replaces forms 7520-12 and 7520-14. Use this form only when work is planned or has occurred that affects the well's construction or operation as an injection well, including work on the casing, tubing or packer (or for shallow Class V wells, the subsurface fluid emplacement network). Use one form per injection well. While reports or other information developed by contractors or service companies may be attached, this form must be signed by a responsible entity as described at 40 CFR 144.32. Note: operators closing Class V wells should use Form 7520-17.

NAME, ADDRESS, PHONE AND/OR EMAIL OF PERMITTEE: Enter the name and street address, city/town, state, and ZIP code of the permittee. Also provide an email address (if available) and/or a phone number.

PERMIT OR EPA ID NUMBER: Enter the well identification number or permit number assigned to the well by the EPA or the permitting authority.

API NUMBER: Enter the number assigned by the local jurisdiction (usually a State Oil and Gas Agency) using the American Petroleum Institute standard numbering system.

FULL WELL NAME: Enter the full name of the well or project.

Enter the **STATE** and **COUNTY** where the well is located. For States that do not have counties, use the name of that State's equivalent jurisdiction at a more local level.

WELL LOCATION: Fill in the complete township, range, and section to the nearest quarter-quarter section. A township is north or south of the baseline, and a range is east or west of the principal meridian (e.g., T12N, R34W). Also include the distance, in feet, from the nearest north or south line and nearest east or west line of the quarter-section. Also, enter the **latitude** and **longitude** of the well in decimal degrees, to five or six places if possible; be sure to include a negative sign for the longitude of a well in the Western Hemisphere and a negative sign for the latitude of a well in the Southern Hemisphere.

Enter the **WELL CLASS,** i.e., the class of injection well as defined in 40 CFR 144.6.

TIMING OF THE ACTION: Check ***Notice prior to work*** if the activity has not yet occurred (i.e., is planned). Check ***Report after work*** if the activity described has already occurred. As appropriate, include the date the activity is expected to start or the date the activity was completed. (Note this may not be available, e.g., for a plugging plan submitted with a permit application.)

TYPE OF ACTION: Check the appropriate box to describe the kind of activity being reported. Check ***Well Rework*** for work that was/will be performed on the well after it has already been in operation as an injection well. Check ***Plugging and Abandonment*** to report on plans for or descriptions of final closure/plugging after use as an injection well. Check ***Conversion to a Non-Injection Well*** if the well is to be converted to something other than an injection well.

Provide a **NARRATIVE DESCRIPTION** of the work planned to be performed, or that was performed. The narrative should include a description of the main procedures planned or that occurred during the work activity. A service company report, daily report, or similar document may be attached if it includes all the requested information and is clear and legible.

For well reworks, include the following information: The reason for the well rework; depths of activity; type of activity; changes to injection well configuration, well casing, or cement behind casing; any plug added to the well and its depth; any newly drilled interval and its depth; method(s) to demonstrate that the well has mechanical integrity (as applicable); and any deviations from the approved rework plan (as applicable).

For a well plugging plan, include the following information: Reason for the well plugging; number of plugs placed, and their depths; materials used as plugs (e.g., cast iron bridge plug, cement, cement retainer); method to set plugs; and wait-on-cement times, if any. Also provide one or more cost estimates from an independent firm in the business of plugging and abandoning wells to plug the well as described in the plan.

For well plugging affidavit, include the following information: Reason for the well plugging; number of plugs placed, and their depths; materials used as plugs (e.g., cast iron bridge plug, cement, cement retainer); method to set plugs; wait-on-cement times, if any; and any deviations from the approved plugging plan (if applicable).

For conversion to a non-injection well, include the following information: Depths of activity; type of activity; changes to injection well configuration, well casing, or cement behind casing; any plug added to the well and its depth; any newly drilled interval and its depth; depths of new perforations; and method(s) to demonstrate that the well has mechanical integrity (as applicable).

For all of the above activities, include a well sketch depicting the work, results of well tests/logging performed, service company tickets, and any other available information demonstrating how the work was/is to be performed. Also, specify whether depths are below ground surface, relative to Kelly bushing, etc.

CERTIFICATION: This form must be signed and dated by either: a responsible corporate officer for a corporation, by a general partner for a partnership, by the proprietor of a sole proprietorship, or by a principal executive or ranking elected official for a public agency.

PAPERWORK REDUCTION ACT NOTICE: The public reporting and recordkeeping burden for this collection of information is estimated to average between 6.0 and 7.9 hours per response, depending on the injection well class. Burden means the total time, effort, or financial resource expended by persons to generate, maintain, retain, or disclose or provide information to or for a Federal Agency. This includes the time needed to review instructions; develop, acquire, install, and utilize technology and systems for the purposes of collecting, validating, and verifying information, processing and maintaining information, and disclosing and providing information; adjust the existing ways to comply with any previously applicable instructions and requirements; train personnel to be able to respond to the collection of information; search data sources; complete and review the collection of information; and, transmit or otherwise disclose the information. An agency may not conduct or sponsor, and a person is not required to respond to, a collection of information unless it displays a currently valid OMB control number. Send comments on the Agency's need for this information, the accuracy of the provided burden estimates, and any suggested methods for minimizing respondent burden, including the use of automated collection techniques to Director, Collection Strategies Division, U.S. Environmental Protection Agency (2822), 1200 Pennsylvania Ave., NW., Washington, D.C. 20460. Include the OMB control number in any correspondence. Do not send the completed forms to this address.

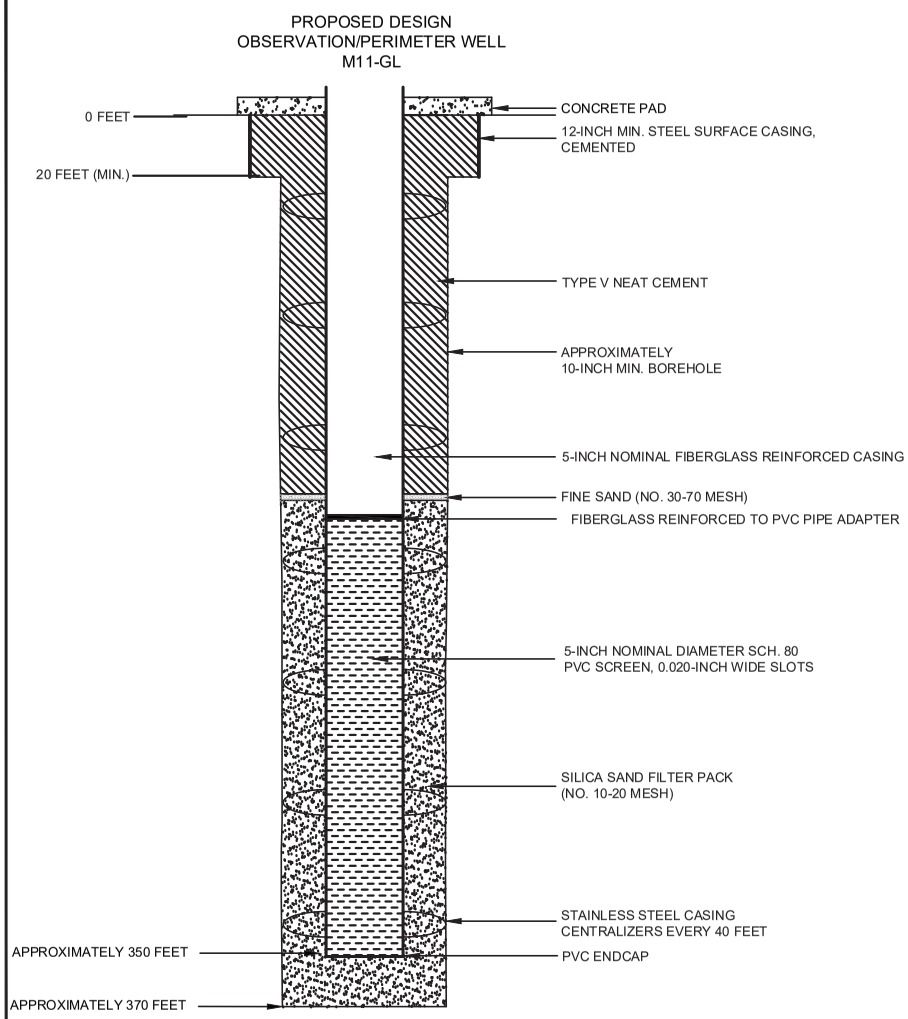

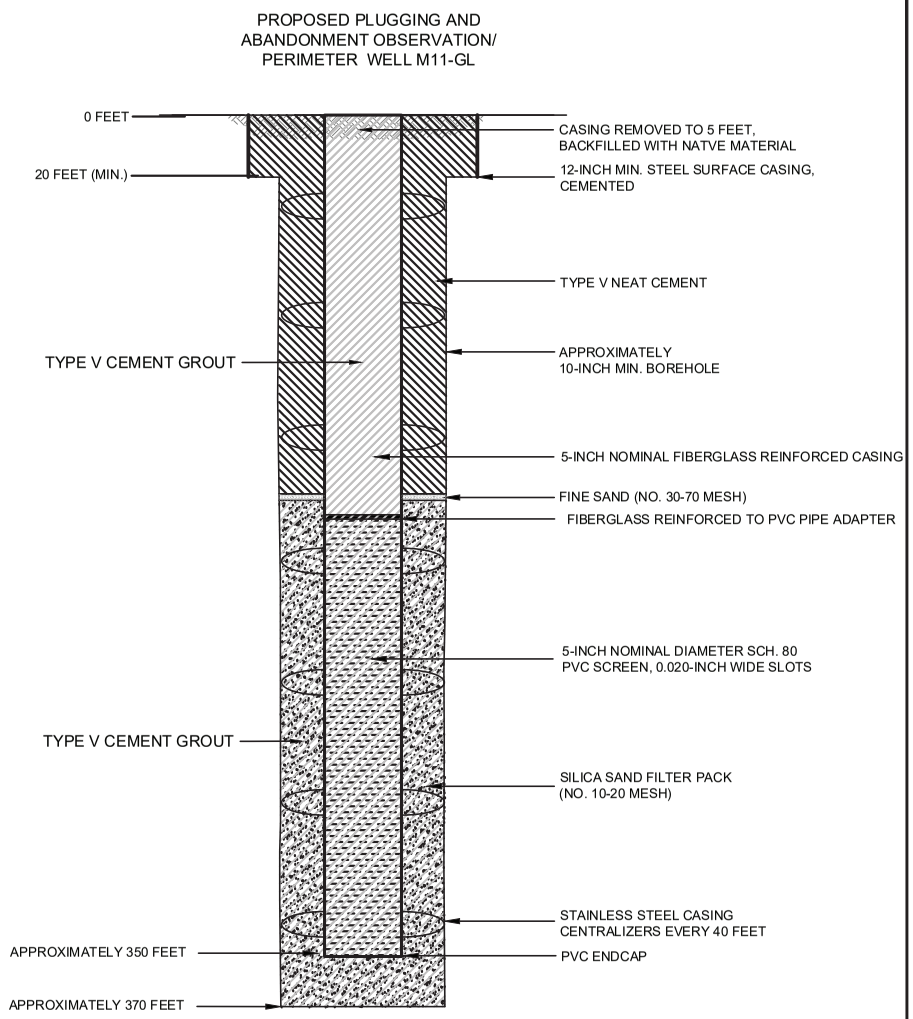

NOTES

1. WELL DESIGN DETAILS ARE BASED ON CORE HOLE AND WELL LOG RECORDS.

HALEY ALDRICH

FLORENCE COPPER, INC.
FLORENCE, ARIZONA

ABANDONMENT SCHEMATIC
OBSERVATION/PERIMETER
WELL M11-GL

SEPTEMBER 2019
SCALE: AS SHOWN

FIGURE 1

OMB No. 2040-0042 Approval Expires 4/30/2022

United States Environmental Protection Agency

WELL REWORK RECORD, PLUGGING AND ABANDONMENT PLAN, OR PLUGGING AND ABANDONMENT AFFIDAVIT

Name and Address, Phone Number and/or Email of Permittee

Florence Copper Project
1575 W Hunt Hwy,
Florence, AZ 85132

Permit or EPA ID Number	API Number	Full Well Name
R9UIC-AZ3-FY11-1		M12-O

State	County
Arizona	Pinal

Locate well in two directions from nearest lines of quarter section and drilling unit

Latitude 33.0485178

Surface Location

SW **1/4 of** SE **1/4 of Section** 28 **Township** 4S **Range** 9E

Longitude -111.4277916

_____ **ft. from (N/S)** _____ **Line of quarter section**

_____ **ft. from (E/W)** _____ **Line of quarter section.**

Well Class	Timing of Action (pick one)	Type of Action (pick one)
☐ Class I ☐ Class II ☑ Class III ☐ Class V	☑ Notice Prior to Work Date Expected to Commence March 2021 ☐ Report After Work Date Work Ended	☐ Well Rework ☑ Plugging and Abandonment ☐ Conversion to a Non-Injection Well

Provide a narrative description of the work planned to be performed, or that was performed. Use additional pages as necessary. See instructions.

A workover rig capable of performing the required abandonment operations at the required depths will be moved in and set up over the well. The well casing will be inspected to determine the depth to which the well remains open and if any obstructions are present in the casing; the presence and condition of any existing surface casing will also be documented. If necessary, the well casing will be cleaned out to the bottom of the deepest screen or perforation to enable placement of cement seals.

If surface casing is present, an attempt will be made to remove it. If removal of the surface casing is not feasible, it will be left in the hole and perforated as needed to allow an annular seal to be placed to a depth of at least 25 feet bgs. In areas of agricultural use, the surface casing will be cut at least 5 feet bgs and removed.

If the surface casing cannot be removed, it will be perforated from at least 20 feet below the bedrock-LBFU contact to at least 20 feet above the contact; from at least 20 feet below the base of the MFGU to at least 20 feet above the top of the MFGU; and from at least 25 feet bgs to 5 feet bgs.

A tremie pipe will be used to place Type V cement in the open well from the bottom of the well casing to the top of the well casing. Cement retainers, as described above, will be used to force cement grout into the annulus and behind perforated screen intervals, as necessary.

If the well casing has been obstructed, as much cement as possible will be placed from 100 feet below the LBFU-bedrock contact to the top of the casing.

The volume of Type V cement will be recorded and will not be less than the estimated volume of material required to fill each interval. All cement grout will consist of Type V cement, or equivalent approved in accordance with the UIC Permit.

Certification

I certify under the penalty of law that I have personally examined and am familiar with the information submitted in this document and all attachments and that, based on my inquiry of those individuals immediately responsible for obtaining the information, I believe that the information is true, accurate, and complete. I am aware that there are significant penalties for submitting false information, including the possibliity of fine and imprisonment. (Ref. 40 CFR § 144.32)

Name and Official Title *(Please type or print)*	Signature	Date Signed
Dan Johnson, VP - General Manager		10/3/2019

INSTRUCTIONS FOR FORM 7520-19

This form replaces forms 7520-12 and 7520-14. Use this form only when work is planned or has occurred that affects the well's construction or operation as an injection well, including work on the casing, tubing or packer (or for shallow Class V wells, the subsurface fluid emplacement network). Use one form per injection well. While reports or other information developed by contractors or service companies may be attached, this form must be signed by a responsible entity as described at 40 CFR 144.32. Note: operators closing Class V wells should use Form 7520-17.

NAME, ADDRESS, PHONE AND/OR EMAIL OF PERMITTEE: Enter the name and street address, city/town, state, and ZIP code of the permittee. Also provide an email address (if available) and/or a phone number.

PERMIT OR EPA ID NUMBER: Enter the well identification number or permit number assigned to the well by the EPA or the permitting authority.

API NUMBER: Enter the number assigned by the local jurisdiction (usually a State Oil and Gas Agency) using the American Petroleum Institute standard numbering system.

FULL WELL NAME: Enter the full name of the well or project.

Enter the **STATE** and **COUNTY** where the well is located. For States that do not have counties, use the name of that State's equivalent jurisdiction at a more local level.

WELL LOCATION: Fill in the complete township, range, and section to the nearest quarter-quarter section. A township is north or south of the baseline, and a range is east or west of the principal meridian (e.g., T12N, R34W). Also include the distance, in feet, from the nearest north or south line and nearest east or west line of the quarter-section. Also, enter the **latitude** and **longitude** of the well in decimal degrees, to five or six places if possible; be sure to include a negative sign for the longitude of a well in the Western Hemisphere and a negative sign for the latitude of a well in the Southern Hemisphere.

Enter the **WELL CLASS,** i.e., the class of injection well as defined in 40 CFR 144.6.

TIMING OF THE ACTION: Check ***Notice prior to work*** if the activity has not yet occurred (i.e., is planned). Check ***Report after work*** if the activity described has already occurred. As appropriate, include the date the activity is expected to start or the date the activity was completed. (Note this may not be available, e.g., for a plugging plan submitted with a permit application.)

TYPE OF ACTION: Check the appropriate box to describe the kind of activity being reported. Check ***Well Rework*** for work that was/will be performed on the well after it has already been in operation as an injection well. Check ***Plugging and Abandonment*** to report on plans for or descriptions of final closure/plugging after use as an injection well. Check ***Conversion to a Non-Injection Well*** if the well is to be converted to something other than an injection well.

Provide a **NARRATIVE DESCRIPTION** of the work planned to be performed, or that was performed. The narrative should include a description of the main procedures planned or that occurred during the work activity. A service company report, daily report, or similar document may be attached if it includes all the requested information and is clear and legible.

For well reworks, include the following information: The reason for the well rework; depths of activity; type of activity; changes to injection well configuration, well casing, or cement behind casing; any plug added to the well and its depth; any newly drilled interval and its depth; method(s) to demonstrate that the well has mechanical integrity (as applicable); and any deviations from the approved rework plan (as applicable).

For a well plugging plan, include the following information: Reason for the well plugging; number of plugs placed, and their depths; materials used as plugs (e.g., cast iron bridge plug, cement, cement retainer); method to set plugs; and wait-on-cement times, if any. Also provide one or more cost estimates from an independent firm in the business of plugging and abandoning wells to plug the well as described in the plan.

For well plugging affidavit, include the following information: Reason for the well plugging; number of plugs placed, and their depths; materials used as plugs (e.g., cast iron bridge plug, cement, cement retainer); method to set plugs; wait-on-cement times, if any; and any deviations from the approved plugging plan (if applicable).

For conversion to a non-injection well, include the following information: Depths of activity; type of activity; changes to injection well configuration, well casing, or cement behind casing; any plug added to the well and its depth; any newly drilled interval and its depth; depths of new perforations; and method(s) to demonstrate that the well has mechanical integrity (as applicable).

For all of the above activities, include a well sketch depicting the work, results of well tests/logging performed, service company tickets, and any other available information demonstrating how the work was/is to be performed. Also, specify whether depths are below ground surface, relative to Kelly bushing, etc.

CERTIFICATION: This form must be signed and dated by either: a responsible corporate officer for a corporation, by a general partner for a partnership, by the proprietor of a sole proprietorship, or by a principal executive or ranking elected official for a public agency.

PAPERWORK REDUCTION ACT NOTICE: The public reporting and recordkeeping burden for this collection of information is estimated to average between 6.0 and 7.9 hours per response, depending on the injection well class. Burden means the total time, effort, or financial resource expended by persons to generate, maintain, retain, or disclose or provide information to or for a Federal Agency. This includes the time needed to review instructions; develop, acquire, install, and utilize technology and systems for the purposes of collecting, validating, and verifying information, processing and maintaining information, and disclosing and providing information; adjust the existing ways to comply with any previously applicable instructions and requirements; train personnel to be able to respond to the collection of information; search data sources; complete and review the collection of information; and, transmit or otherwise disclose the information. An agency may not conduct or sponsor, and a person is not required to respond to, a collection of information unless it displays a currently valid OMB control number. Send comments on the Agency's need for this information, the accuracy of the provided burden estimates, and any suggested methods for minimizing respondent burden, including the use of automated collection techniques to Director, Collection Strategies Division, U.S. Environmental Protection Agency (2822), 1200 Pennsylvania Ave., NW., Washington, D.C. 20460. Include the OMB control number in any correspondence. Do not send the completed forms to this address.

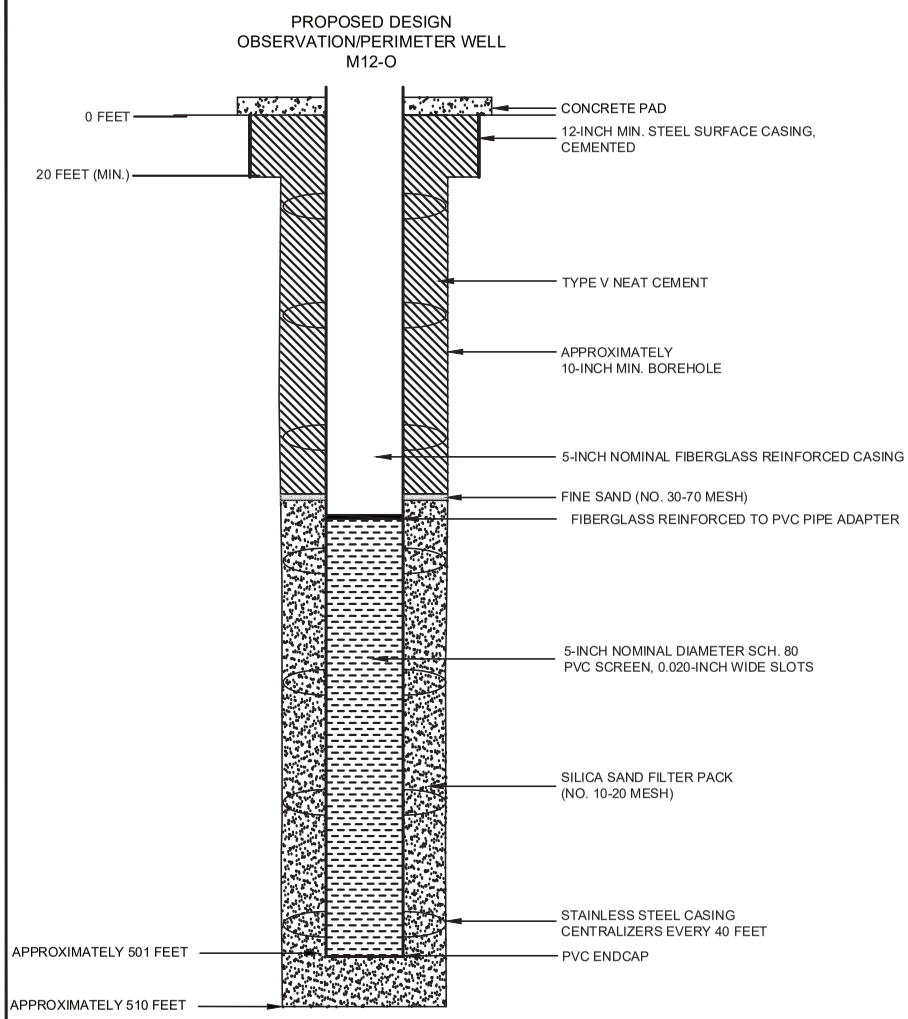

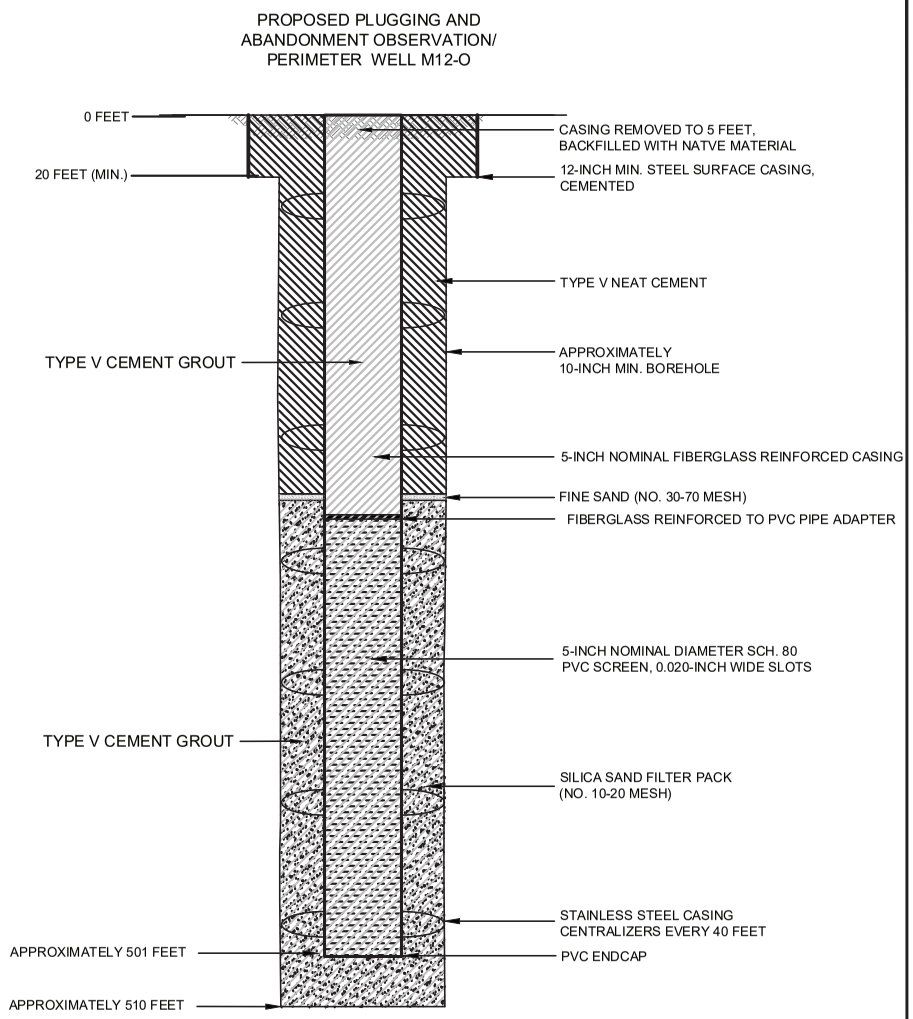

NOTES

1. WELL DESIGN DETAILS ARE BASED ON CORE HOLE AND WELL LOG RECORDS.

HALEY ALDRICH

FLORENCE COPPER, INC.
FLORENCE, ARIZONA

ABANDONMENT SCHEMATIC
OBSERVATION/PERIMETER
WELL M12-O

SEPTEMBER 2019
SCALE: AS SHOWN

FIGURE 1

OMB No. 2040-0042 Approval Expires 4/30/2022

United States Environmental Protection Agency

WELL REWORK RECORD, PLUGGING AND ABANDONMENT PLAN, OR PLUGGING AND ABANDONMENT AFFIDAVIT

Name and Address, Phone Number and/or Email of Permittee

Florence Copper Project
1575 W Hunt Hwy,
Florence, AZ 85132

Permit or EPA ID Number	API Number	Full Well Name
R9UIC-AZ3-FY11-1		M13-S

State	County
Arizona	Pinal

Locate well in two directions from nearest lines of quarter section and drilling unit

Latitude 33.04852256

Longitude -111.4279525

Surface Location

SW **1/4 of** SE **1/4 of Section** 28 **Township** 4S **Range** 9E

_____ **ft. from (N/S)** _____ **Line of quarter section**

_____ **ft. from (E/W)** _____ **Line of quarter section.**

Well Class	Timing of Action (pick one)	Type of Action (pick one)
☐ Class I ☐ Class II ☑ Class III ☐ Class V	☑ Notice Prior to Work Date Expected to Commence March 2021 ☐ Report After Work Date Work Ended	☐ Well Rework ☑ Plugging and Abandonment ☐ Conversion to a Non-Injection Well

Provide a narrative description of the work planned to be performed, or that was performed. Use additional pages as necessary. See instructions.

A workover rig capable of performing the required abandonment operations at the required depths will be moved in and set up over the well. The well casing will be inspected to determine the depth to which the well remains open and if any obstructions are present in the casing; the presence and condition of any existing surface casing will also be documented. If necessary, the well casing will be cleaned out to the bottom of the deepest screen or perforation to enable placement of cement seals.

If surface casing is present, an attempt will be made to remove it. If removal of the surface casing is not feasible, it will be left in the hole and perforated as needed to allow an annular seal to be placed to a depth of at least 25 feet bgs. In areas of agricultural use, the surface casing will be cut at least 5 feet bgs and removed.

If the surface casing cannot be removed, it will be perforated from at least 20 feet below the bedrock-LBFU contact to at least 20 feet above the contact; from at least 20 feet below the base of the MFGU to at least 20 feet above the top of the MFGU; and from at least 25 feet bgs to 5 feet bgs.

A tremie pipe will be used to place Type V cement in the open well from the bottom of the well casing to the top of the well casing. Cement retainers, as described above, will be used to force cement grout into the annulus and behind perforated screen intervals, as necessary.

If the well casing has been obstructed, as much cement as possible will be placed from 100 feet below the LBFU-bedrock contact to the top of the casing.

The volume of Type V cement will be recorded and will not be less than the estimated volume of material required to fill each interval. All cement grout will consist of Type V cement, or equivalent approved in accordance with the UIC Permit.

Certification

I certify under the penalty of law that I have personally examined and am familiar with the information submitted in this document and all attachments and that, based on my inquiry of those individuals immediately responsible for obtaining the information, I believe that the information is true, accurate, and complete. I am aware that there are significant penalties for submitting false information, including the possibliity of fine and imprisonment. (Ref. 40 CFR § 144.32)

Name and Official Title *(Please type or print)*	Signature	Date Signed
Dan Johnson, VP - General Manager		10/3/2019

INSTRUCTIONS FOR FORM 7520-19

This form replaces forms 7520-12 and 7520-14. Use this form only when work is planned or has occurred that affects the well's construction or operation as an injection well, including work on the casing, tubing or packer (or for shallow Class V wells, the subsurface fluid emplacement network). Use one form per injection well. While reports or other information developed by contractors or service companies may be attached, this form must be signed by a responsible entity as described at 40 CFR 144.32. Note: operators closing Class V wells should use Form 7520-17.

NAME, ADDRESS, PHONE AND/OR EMAIL OF PERMITTEE: Enter the name and street address, city/town, state, and ZIP code of the permittee. Also provide an email address (if available) and/or a phone number.

PERMIT OR EPA ID NUMBER: Enter the well identification number or permit number assigned to the well by the EPA or the permitting authority.

API NUMBER: Enter the number assigned by the local jurisdiction (usually a State Oil and Gas Agency) using the American Petroleum Institute standard numbering system.

FULL WELL NAME: Enter the full name of the well or project.

Enter the **STATE** and **COUNTY** where the well is located. For States that do not have counties, use the name of that State's equivalent jurisdiction at a more local level.

WELL LOCATION: Fill in the complete township, range, and section to the nearest quarter-quarter section. A township is north or south of the baseline, and a range is east or west of the principal meridian (e.g., T12N, R34W). Also include the distance, in feet, from the nearest north or south line and nearest east or west line of the quarter-section. Also, enter the **latitude** and **longitude** of the well in decimal degrees, to five or six places if possible; be sure to include a negative sign for the longitude of a well in the Western Hemisphere and a negative sign for the latitude of a well in the Southern Hemisphere.

Enter the **WELL CLASS,** i.e., the class of injection well as defined in 40 CFR 144.6.

TIMING OF THE ACTION: Check ***Notice prior to work*** if the activity has not yet occurred (i.e., is planned). Check ***Report after work*** if the activity described has already occurred. As appropriate, include the date the activity is expected to start or the date the activity was completed. (Note this may not be available, e.g., for a plugging plan submitted with a permit application.)

TYPE OF ACTION: Check the appropriate box to describe the kind of activity being reported. Check ***Well Rework*** for work that was/will be performed on the well after it has already been in operation as an injection well. Check ***Plugging and Abandonment*** to report on plans for or descriptions of final closure/plugging after use as an injection well. Check ***Conversion to a Non-Injection Well*** if the well is to be converted to something other than an injection well.

Provide a **NARRATIVE DESCRIPTION** of the work planned to be performed, or that was performed. The narrative should include a description of the main procedures planned or that occurred during the work activity. A service company report, daily report, or similar document may be attached if it includes all the requested information and is clear and legible.

For well reworks, include the following information: The reason for the well rework; depths of activity; type of activity; changes to injection well configuration, well casing, or cement behind casing; any plug added to the well and its depth; any newly drilled interval and its depth; method(s) to demonstrate that the well has mechanical integrity (as applicable); and any deviations from the approved rework plan (as applicable).

For a well plugging plan, include the following information: Reason for the well plugging; number of plugs placed, and their depths; materials used as plugs (e.g., cast iron bridge plug, cement, cement retainer); method to set plugs; and wait-on-cement times, if any. Also provide one or more cost estimates from an independent firm in the business of plugging and abandoning wells to plug the well as described in the plan.

For well plugging affidavit, include the following information: Reason for the well plugging; number of plugs placed, and their depths; materials used as plugs (e.g., cast iron bridge plug, cement, cement retainer); method to set plugs; wait-on-cement times, if any; and any deviations from the approved plugging plan (if applicable).

For conversion to a non-injection well, include the following information: Depths of activity; type of activity; changes to injection well configuration, well casing, or cement behind casing; any plug added to the well and its depth; any newly drilled interval and its depth; depths of new perforations; and method(s) to demonstrate that the well has mechanical integrity (as applicable).

For all of the above activities, include a well sketch depicting the work, results of well tests/logging performed, service company tickets, and any other available information demonstrating how the work was/is to be performed. Also, specify whether depths are below ground surface, relative to Kelly bushing, etc.

CERTIFICATION: This form must be signed and dated by either: a responsible corporate officer for a corporation, by a general partner for a partnership, by the proprietor of a sole proprietorship, or by a principal executive or ranking elected official for a public agency.

PAPERWORK REDUCTION ACT NOTICE: The public reporting and recordkeeping burden for this collection of information is estimated to average between 6.0 and 7.9 hours per response, depending on the injection well class. Burden means the total time, effort, or financial resource expended by persons to generate, maintain, retain, or disclose or provide information to or for a Federal Agency. This includes the time needed to review instructions; develop, acquire, install, and utilize technology and systems for the purposes of collecting, validating, and verifying information, processing and maintaining information, and disclosing and providing information; adjust the existing ways to comply with any previously applicable instructions and requirements; train personnel to be able to respond to the collection of information; search data sources; complete and review the collection of information; and, transmit or otherwise disclose the information. An agency may not conduct or sponsor, and a person is not required to respond to, a collection of information unless it displays a currently valid OMB control number. Send comments on the Agency's need for this information, the accuracy of the provided burden estimates, and any suggested methods for minimizing respondent burden, including the use of automated collection techniques to Director, Collection Strategies Division, U.S. Environmental Protection Agency (2822), 1200 Pennsylvania Ave., NW., Washington, D.C. 20460. Include the OMB control number in any correspondence. Do not send the completed forms to this address.

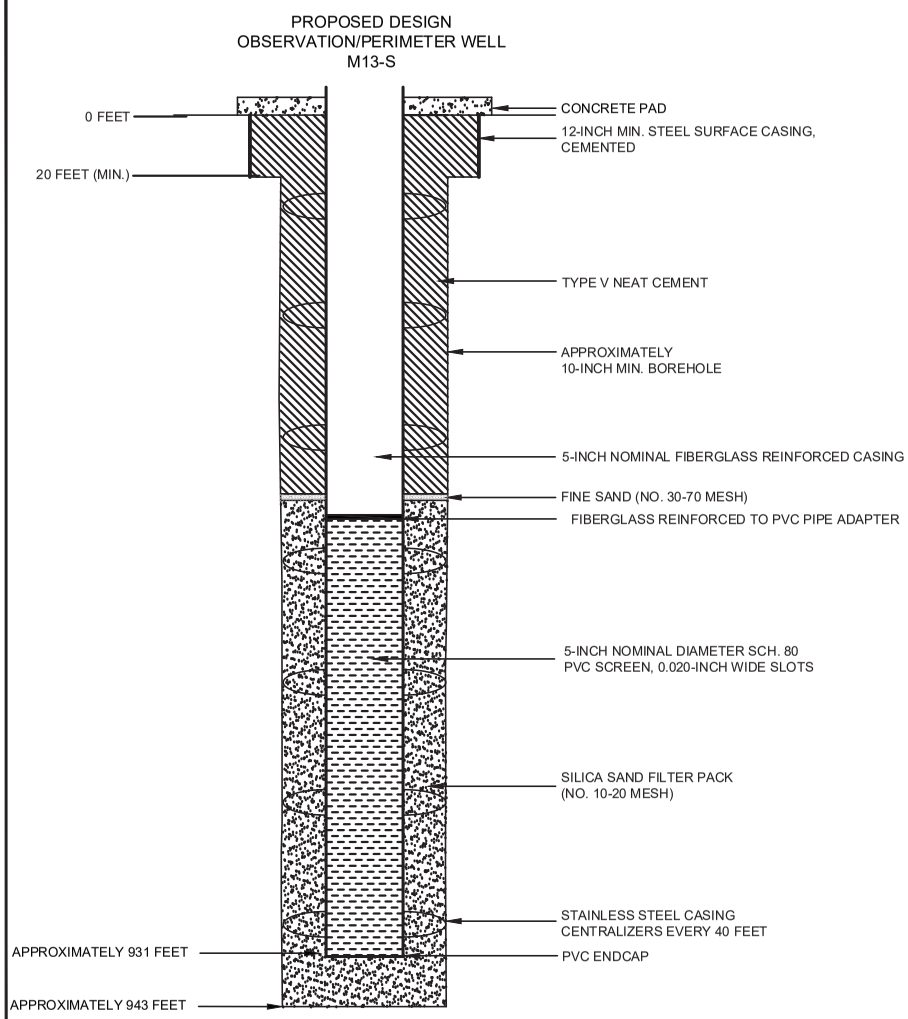

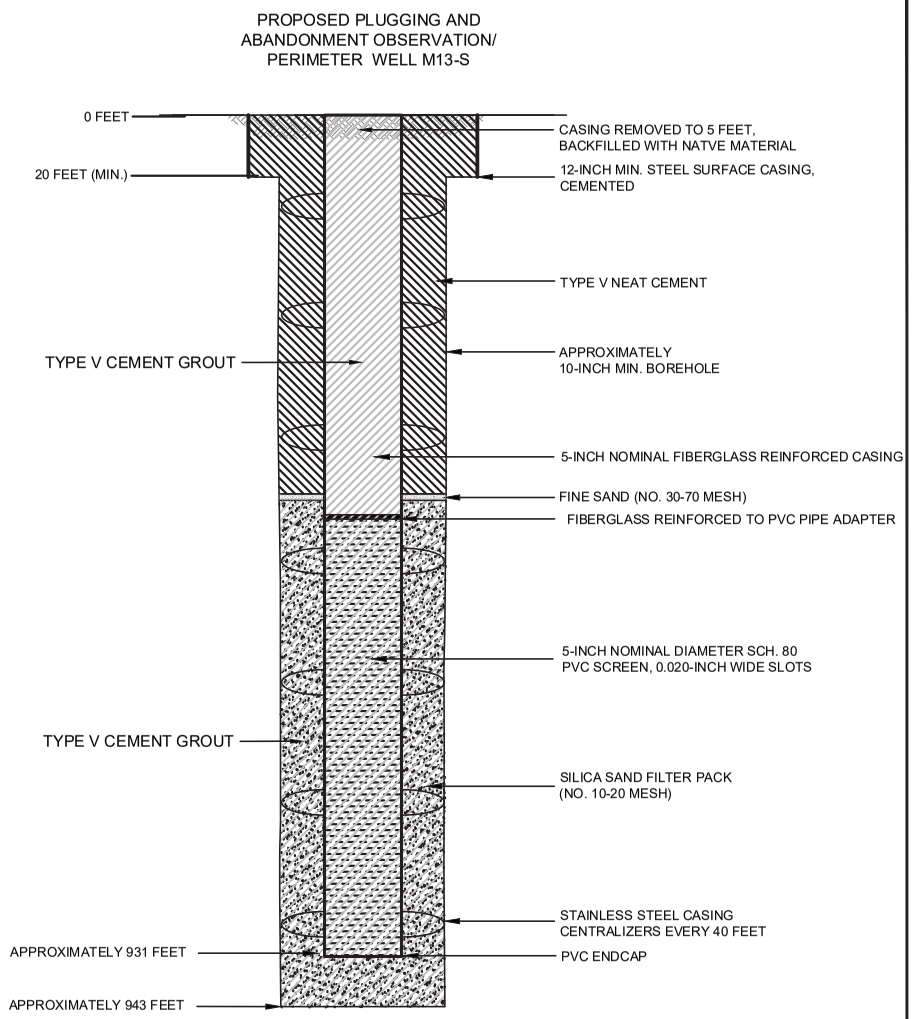

NOTES

1. WELL DESIGN DETAILS ARE BASED ON CORE HOLE AND WELL LOG RECORDS.

HALEY ALDRICH

FLORENCE COPPER, INC.
FLORENCE, ARIZONA

ABANDONMENT SCHEMATIC
OBSERVATION/PERIMETER
WELL M13-S

SEPTEMBER 2019
SCALE: AS SHOWN

FIGURE 1

OMB No. 2040-0042 Approval Expires 4/30/2022

United States Environmental Protection Agency

WELL REWORK RECORD, PLUGGING AND ABANDONMENT PLAN, OR PLUGGING AND ABANDONMENT AFFIDAVIT

Name and Address, Phone Number and/or Email of Permittee

Florence Copper Project
1575 W Hunt Hwy,
Florence, AZ 85132

Permit or EPA ID Number	API Number	Full Well Name
R9UIC-AZ3-FY11-1		M14-GL

State	County
Arizona	Pinal

Locate well in two directions from nearest lines of quarter section and drilling unit

Latitude 33.05105108

Surface Location

NW **1/4 of** SW **1/4 of Section** 28 **Township** 4S **Range** 9E

Longitude -111.4370365

_____ **ft. from (N/S)** _____ **Line of quarter section**

_____ **ft. from (E/W)** _____ **Line of quarter section.**

Well Class	Timing of Action (pick one)	Type of Action (pick one)
☐ Class I ☐ Class II ☑ Class III ☐ Class V	☑ Notice Prior to Work Date Expected to Commence March 2021 ☐ Report After Work Date Work Ended	☐ Well Rework ☑ Plugging and Abandonment ☐ Conversion to a Non-Injection Well

Provide a narrative description of the work planned to be performed, or that was performed. Use additional pages as necessary. See instructions.

A workover rig capable of performing the required abandonment operations at the required depths will be moved in and set up over the well. The well casing will be inspected to determine the depth to which the well remains open and if any obstructions are present in the casing; the presence and condition of any existing surface casing will also be documented. If necessary, the well casing will be cleaned out to the bottom of the deepest screen or perforation to enable placement of cement seals.

If surface casing is present, an attempt will be made to remove it. If removal of the surface casing is not feasible, it will be left in the hole and perforated as needed to allow an annular seal to be placed to a depth of at least 25 feet bgs. In areas of agricultural use, the surface casing will be cut at least 5 feet bgs and removed.

If the surface casing cannot be removed, it will be perforated from at least 20 feet below the bedrock-LBFU contact to at least 20 feet above the contact; from at least 20 feet below the base of the MFGU to at least 20 feet above the top of the MFGU; and from at least 25 feet bgs to 5 feet bgs.

A tremie pipe will be used to place Type V cement in the open well from the bottom of the well casing to the top of the well casing. Cement retainers, as described above, will be used to force cement grout into the annulus and behind perforated screen intervals, as necessary.

If the well casing has been obstructed, as much cement as possible will be placed from 100 feet below the LBFU-bedrock contact to the top of the casing.

The volume of Type V cement will be recorded and will not be less than the estimated volume of material required to fill each interval. All cement grout will consist of Type V cement, or equivalent approved in accordance with the UIC Permit.

Certification

I certify under the penalty of law that I have personally examined and am familiar with the information submitted in this document and all attachments and that, based on my inquiry of those individuals immediately responsible for obtaining the information, I believe that the information is true, accurate, and complete. I am aware that there are significant penalties for submitting false information, including the possibliity of fine and imprisonment. (Ref. 40 CFR § 144.32)

Name and Official Title *(Please type or print)*	Signature	Date Signed
Dan Johnson, VP - General Manager		10/3/2019

INSTRUCTIONS FOR FORM 7520-19

This form replaces forms 7520-12 and 7520-14. Use this form only when work is planned or has occurred that affects the well's construction or operation as an injection well, including work on the casing, tubing or packer (or for shallow Class V wells, the subsurface fluid emplacement network). Use one form per injection well. While reports or other information developed by contractors or service companies may be attached, this form must be signed by a responsible entity as described at 40 CFR 144.32. Note: operators closing Class V wells should use Form 7520-17.

NAME, ADDRESS, PHONE AND/OR EMAIL OF PERMITTEE: Enter the name and street address, city/town, state, and ZIP code of the permittee. Also provide an email address (if available) and/or a phone number.

PERMIT OR EPA ID NUMBER: Enter the well identification number or permit number assigned to the well by the EPA or the permitting authority.

API NUMBER: Enter the number assigned by the local jurisdiction (usually a State Oil and Gas Agency) using the American Petroleum Institute standard numbering system.

FULL WELL NAME: Enter the full name of the well or project.

Enter the **STATE** and **COUNTY** where the well is located. For States that do not have counties, use the name of that State's equivalent jurisdiction at a more local level.

WELL LOCATION: Fill in the complete township, range, and section to the nearest quarter-quarter section. A township is north or south of the baseline, and a range is east or west of the principal meridian (e.g., T12N, R34W). Also include the distance, in feet, from the nearest north or south line and nearest east or west line of the quarter-section. Also, enter the **latitude** and **longitude** of the well in decimal degrees, to five or six places if possible; be sure to include a negative sign for the longitude of a well in the Western Hemisphere and a negative sign for the latitude of a well in the Southern Hemisphere.

Enter the **WELL CLASS,** i.e., the class of injection well as defined in 40 CFR 144.6.

TIMING OF THE ACTION: Check ***Notice prior to work*** if the activity has not yet occurred (i.e., is planned). Check ***Report after work*** if the activity described has already occurred. As appropriate, include the date the activity is expected to start or the date the activity was completed. (Note this may not be available, e.g., for a plugging plan submitted with a permit application.)

TYPE OF ACTION: Check the appropriate box to describe the kind of activity being reported. Check ***Well Rework*** for work that was/will be performed on the well after it has already been in operation as an injection well. Check ***Plugging and Abandonment*** to report on plans for or descriptions of final closure/plugging after use as an injection well. Check ***Conversion to a Non-Injection Well*** if the well is to be converted to something other than an injection well.

Provide a **NARRATIVE DESCRIPTION** of the work planned to be performed, or that was performed. The narrative should include a description of the main procedures planned or that occurred during the work activity. A service company report, daily report, or similar document may be attached if it includes all the requested information and is clear and legible.

For well reworks, include the following information: The reason for the well rework; depths of activity; type of activity; changes to injection well configuration, well casing, or cement behind casing; any plug added to the well and its depth; any newly drilled interval and its depth; method(s) to demonstrate that the well has mechanical integrity (as applicable); and any deviations from the approved rework plan (as applicable).

For a well plugging plan, include the following information: Reason for the well plugging; number of plugs placed, and their depths; materials used as plugs (e.g., cast iron bridge plug, cement, cement retainer); method to set plugs; and wait-on-cement times, if any. Also provide one or more cost estimates from an independent firm in the business of plugging and abandoning wells to plug the well as described in the plan.

For well plugging affidavit, include the following information: Reason for the well plugging; number of plugs placed, and their depths; materials used as plugs (e.g., cast iron bridge plug, cement, cement retainer); method to set plugs; wait-on-cement times, if any; and any deviations from the approved plugging plan (if applicable).

For conversion to a non-injection well, include the following information: Depths of activity; type of activity; changes to injection well configuration, well casing, or cement behind casing; any plug added to the well and its depth; any newly drilled interval and its depth; depths of new perforations; and method(s) to demonstrate that the well has mechanical integrity (as applicable).

For all of the above activities, include a well sketch depicting the work, results of well tests/logging performed, service company tickets, and any other available information demonstrating how the work was/is to be performed. Also, specify whether depths are below ground surface, relative to Kelly bushing, etc.

CERTIFICATION: This form must be signed and dated by either: a responsible corporate officer for a corporation, by a general partner for a partnership, by the proprietor of a sole proprietorship, or by a principal executive or ranking elected official for a public agency.

PAPERWORK REDUCTION ACT NOTICE: The public reporting and recordkeeping burden for this collection of information is estimated to average between 6.0 and 7.9 hours per response, depending on the injection well class. Burden means the total time, effort, or financial resource expended by persons to generate, maintain, retain, or disclose or provide information to or for a Federal Agency. This includes the time needed to review instructions; develop, acquire, install, and utilize technology and systems for the purposes of collecting, validating, and verifying information, processing and maintaining information, and disclosing and providing information; adjust the existing ways to comply with any previously applicable instructions and requirements; train personnel to be able to respond to the collection of information; search data sources; complete and review the collection of information; and, transmit or otherwise disclose the information. An agency may not conduct or sponsor, and a person is not required to respond to, a collection of information unless it displays a currently valid OMB control number. Send comments on the Agency's need for this information, the accuracy of the provided burden estimates, and any suggested methods for minimizing respondent burden, including the use of automated collection techniques to Director, Collection Strategies Division, U.S. Environmental Protection Agency (2822), 1200 Pennsylvania Ave., NW., Washington, D.C. 20460. Include the OMB control number in any correspondence. Do not send the completed forms to this address.

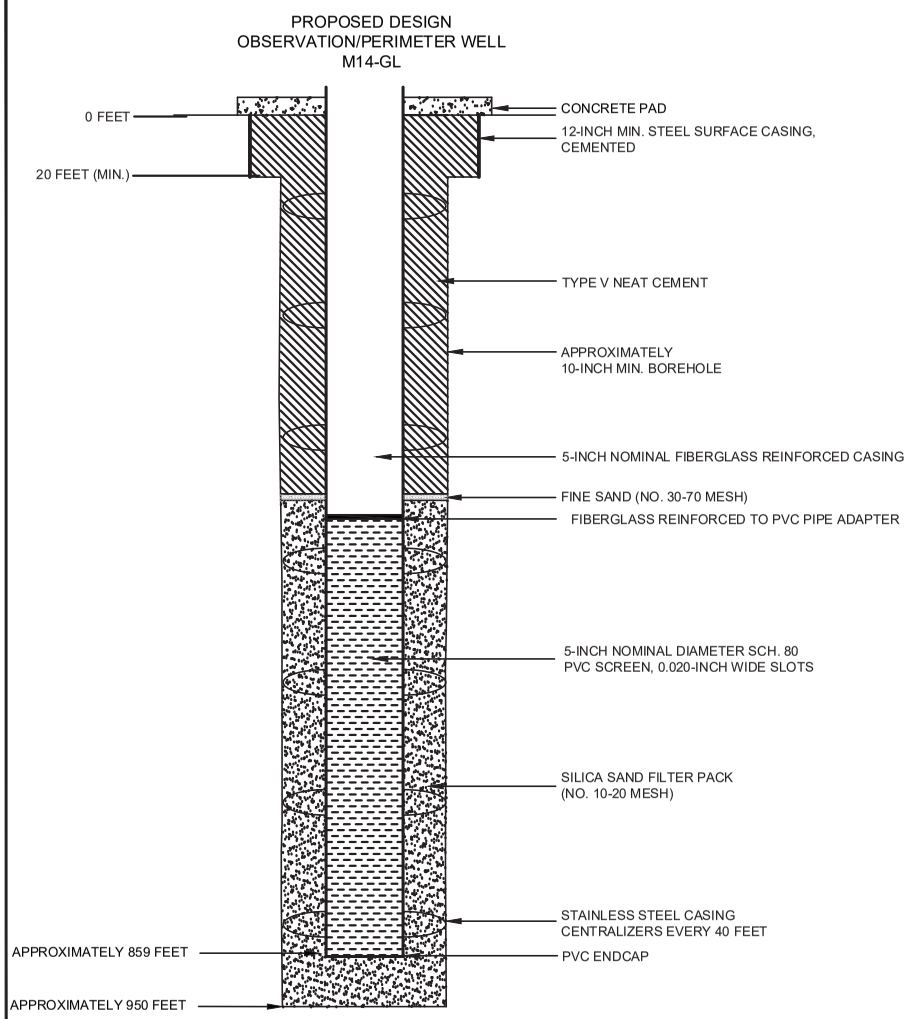

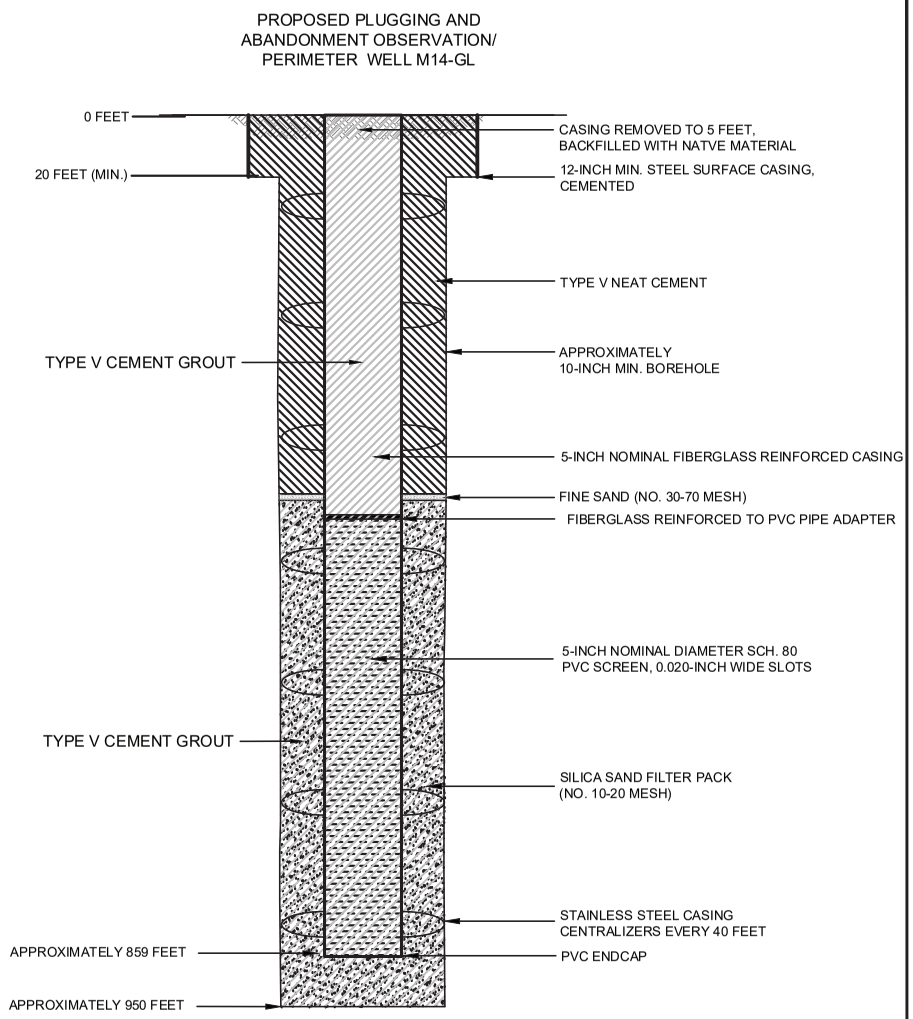

NOTES

1. WELL DESIGN DETAILS ARE BASED ON CORE HOLE AND WELL LOG RECORDS.

HALEY ALDRICH

FLORENCE COPPER, INC.
FLORENCE, ARIZONA

ABANDONMENT SCHEMATIC
OBSERVATION/PERIMETER
WELL M14-GL

SEPTEMBER 2019
SCALE: AS SHOWN

FIGURE 1

OMB No. 2040-0042 Approval Expires 4/30/2022

United States Environmental Protection Agency

WELL REWORK RECORD, PLUGGING AND ABANDONMENT PLAN, OR PLUGGING AND ABANDONMENT AFFIDAVIT

Name and Address, Phone Number and/or Email of Permittee

Florence Copper Project
1575 W Hunt Hwy,
Florence, AZ 85132

Permit or EPA ID Number	API Number	Full Well Name
R9UIC-AZ3-FY11-1		M15-GU

State	County
Arizona	Pinal

Locate well in two directions from nearest lines of quarter section and drilling unit

Surface Location

NW 1/4 of SW 1/4 of Section 28 Township 4S Range 9E

Latitude 33.05106082

Longitude -111.4372098

ft. from (N/S) Line of quarter section

ft. from (E/W) Line of quarter section.

Well Class	Timing of Action (pick one)	Type of Action (pick one)
☐ Class I ☐ Class II ☑ Class III ☐ Class V	☑ Notice Prior to Work Date Expected to Commence March 2021 ☐ Report After Work Date Work Ended	☐ Well Rework ☑ Plugging and Abandonment ☐ Conversion to a Non-Injection Well

Provide a narrative description of the work planned to be performed, or that was performed. Use additional pages as necessary. See instructions.

A workover rig capable of performing the required abandonment operations at the required depths will be moved in and set up over the well. The well casing will be inspected to determine the depth to which the well remains open and if any obstructions are present in the casing; the presence and condition of any existing surface casing will also be documented. If necessary, the well casing will be cleaned out to the bottom of the deepest screen or perforation to enable placement of cement seals.

If surface casing is present, an attempt will be made to remove it. If removal of the surface casing is not feasible, it will be left in the hole and perforated as needed to allow an annular seal to be placed to a depth of at least 25 feet bgs. In areas of agricultural use, the surface casing will be cut at least 5 feet bgs and removed.

If the surface casing cannot be removed, it will be perforated from at least 20 feet below the bedrock-LBFU contact to at least 20 feet above the contact; from at least 20 feet below the base of the MFGU to at least 20 feet above the top of the MFGU; and from at least 25 feet bgs to 5 feet bgs.

A tremie pipe will be used to place Type V cement in the open well from the bottom of the well casing to the top of the well casing. Cement retainers, as described above, will be used to force cement grout into the annulus and behind perforated screen intervals, as necessary.

If the well casing has been obstructed, as much cement as possible will be placed from 100 feet below the LBFU-bedrock contact to the top of the casing.

The volume of Type V cement will be recorded and will not be less than the estimated volume of material required to fill each interval. All cement grout will consist of Type V cement, or equivalent approved in accordance with the UIC Permit.

Certification

I certify under the penalty of law that I have personally examined and am familiar with the information submitted in this document and all attachments and that, based on my inquiry of those individuals immediately responsible for obtaining the information, I believe that the information is true, accurate, and complete. I am aware that there are significant penalties for submitting false information, including the possibliity of fine and imprisonment. (Ref. 40 CFR § 144.32)

Name and Official Title *(Please type or print)*	Signature	Date Signed
Dan Johnson, VP - General Manager		10/3/2019

INSTRUCTIONS FOR FORM 7520-19

This form replaces forms 7520-12 and 7520-14. Use this form only when work is planned or has occurred that affects the well's construction or operation as an injection well, including work on the casing, tubing or packer (or for shallow Class V wells, the subsurface fluid emplacement network). Use one form per injection well. While reports or other information developed by contractors or service companies may be attached, this form must be signed by a responsible entity as described at 40 CFR 144.32. Note: operators closing Class V wells should use Form 7520-17.

NAME, ADDRESS, PHONE AND/OR EMAIL OF PERMITTEE: Enter the name and street address, city/town, state, and ZIP code of the permittee. Also provide an email address (if available) and/or a phone number.

PERMIT OR EPA ID NUMBER: Enter the well identification number or permit number assigned to the well by the EPA or the permitting authority.

API NUMBER: Enter the number assigned by the local jurisdiction (usually a State Oil and Gas Agency) using the American Petroleum Institute standard numbering system.

FULL WELL NAME: Enter the full name of the well or project.

Enter the **STATE** and **COUNTY** where the well is located. For States that do not have counties, use the name of that State's equivalent jurisdiction at a more local level.

WELL LOCATION: Fill in the complete township, range, and section to the nearest quarter-quarter section. A township is north or south of the baseline, and a range is east or west of the principal meridian (e.g., T12N, R34W). Also include the distance, in feet, from the nearest north or south line and nearest east or west line of the quarter-section. Also, enter the **latitude** and **longitude** of the well in decimal degrees, to five or six places if possible; be sure to include a negative sign for the longitude of a well in the Western Hemisphere and a negative sign for the latitude of a well in the Southern Hemisphere.

Enter the **WELL CLASS,** i.e., the class of injection well as defined in 40 CFR 144.6.

TIMING OF THE ACTION: Check ***Notice prior to work*** if the activity has not yet occurred (i.e., is planned). Check ***Report after work*** if the activity described has already occurred. As appropriate, include the date the activity is expected to start or the date the activity was completed. (Note this may not be available, e.g., for a plugging plan submitted with a permit application.)

TYPE OF ACTION: Check the appropriate box to describe the kind of activity being reported. Check ***Well Rework*** for work that was/will be performed on the well after it has already been in operation as an injection well. Check ***Plugging and Abandonment*** to report on plans for or descriptions of final closure/plugging after use as an injection well. Check ***Conversion to a Non-Injection Well*** if the well is to be converted to something other than an injection well.

Provide a **NARRATIVE DESCRIPTION** of the work planned to be performed, or that was performed. The narrative should include a description of the main procedures planned or that occurred during the work activity. A service company report, daily report, or similar document may be attached if it includes all the requested information and is clear and legible.

For well reworks, include the following information: The reason for the well rework; depths of activity; type of activity; changes to injection well configuration, well casing, or cement behind casing; any plug added to the well and its depth; any newly drilled interval and its depth; method(s) to demonstrate that the well has mechanical integrity (as applicable); and any deviations from the approved rework plan (as applicable).

For a well plugging plan, include the following information: Reason for the well plugging; number of plugs placed, and their depths; materials used as plugs (e.g., cast iron bridge plug, cement, cement retainer); method to set plugs; and wait-on-cement times, if any. Also provide one or more cost estimates from an independent firm in the business of plugging and abandoning wells to plug the well as described in the plan.

For well plugging affidavit, include the following information: Reason for the well plugging; number of plugs placed, and their depths; materials used as plugs (e.g., cast iron bridge plug, cement, cement retainer); method to set plugs; wait-on-cement times, if any; and any deviations from the approved plugging plan (if applicable).

For conversion to a non-injection well, include the following information: Depths of activity; type of activity; changes to injection well configuration, well casing, or cement behind casing; any plug added to the well and its depth; any newly drilled interval and its depth; depths of new perforations; and method(s) to demonstrate that the well has mechanical integrity (as applicable).

For all of the above activities, include a well sketch depicting the work, results of well tests/logging performed, service company tickets, and any other available information demonstrating how the work was/is to be performed. Also, specify whether depths are below ground surface, relative to Kelly bushing, etc.

CERTIFICATION: This form must be signed and dated by either: a responsible corporate officer for a corporation, by a general partner for a partnership, by the proprietor of a sole proprietorship, or by a principal executive or ranking elected official for a public agency.

PAPERWORK REDUCTION ACT NOTICE: The public reporting and recordkeeping burden for this collection of information is estimated to average between 6.0 and 7.9 hours per response, depending on the injection well class. Burden means the total time, effort, or financial resource expended by persons to generate, maintain, retain, or disclose or provide information to or for a Federal Agency. This includes the time needed to review instructions; develop, acquire, install, and utilize technology and systems for the purposes of collecting, validating, and verifying information, processing and maintaining information, and disclosing and providing information; adjust the existing ways to comply with any previously applicable instructions and requirements; train personnel to be able to respond to the collection of information; search data sources; complete and review the collection of information; and, transmit or otherwise disclose the information. An agency may not conduct or sponsor, and a person is not required to respond to, a collection of information unless it displays a currently valid OMB control number. Send comments on the Agency's need for this information, the accuracy of the provided burden estimates, and any suggested methods for minimizing respondent burden, including the use of automated collection techniques to Director, Collection Strategies Division, U.S. Environmental Protection Agency (2822), 1200 Pennsylvania Ave., NW., Washington, D.C. 20460. Include the OMB control number in any correspondence. Do not send the completed forms to this address.

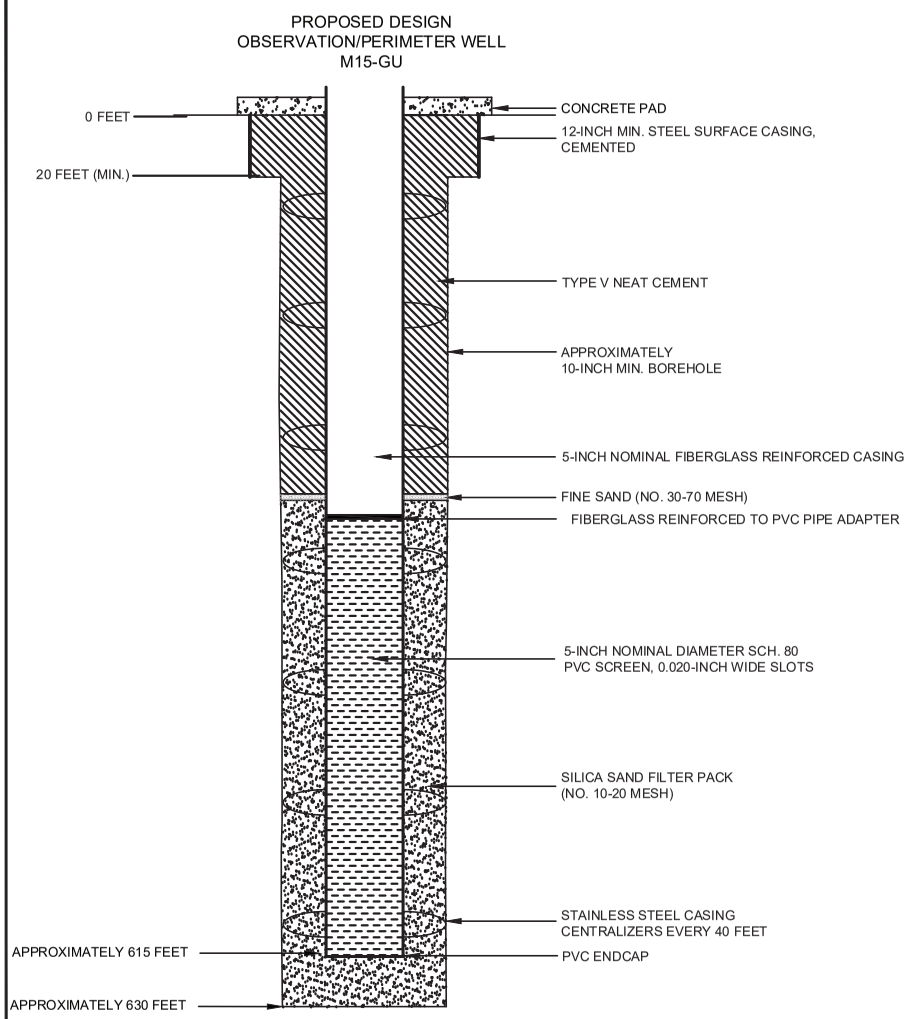

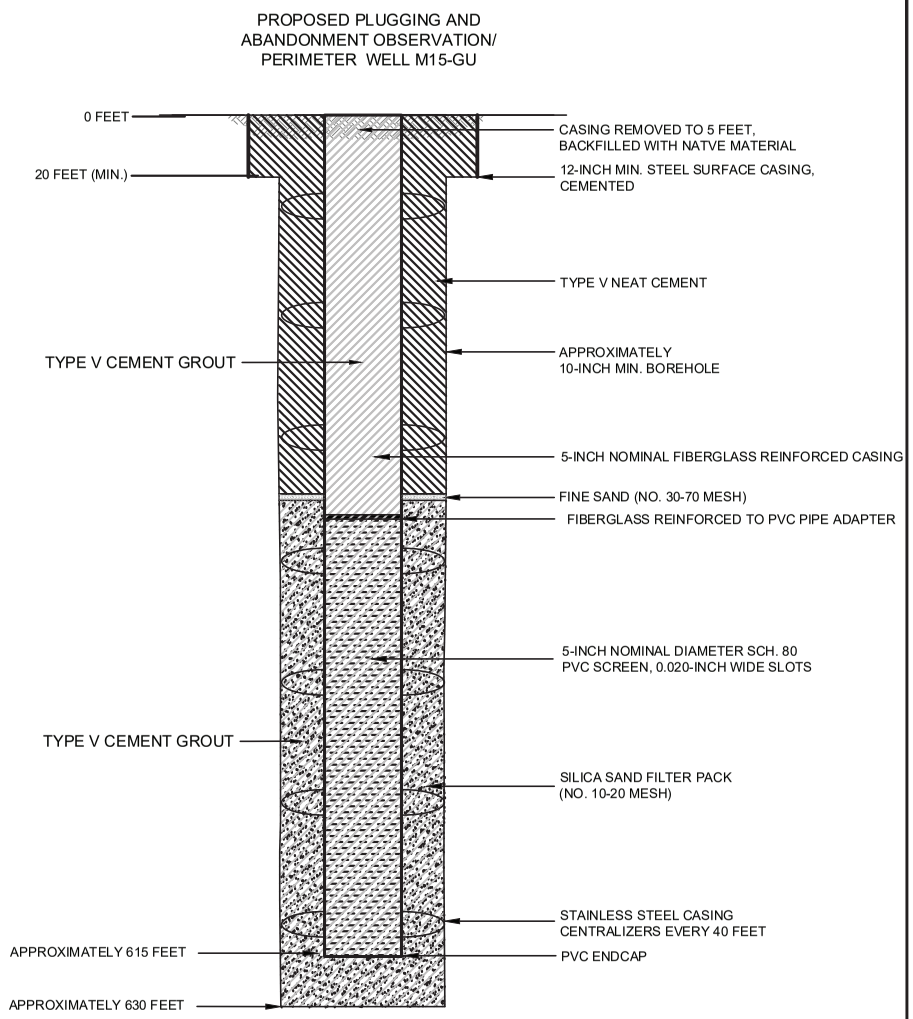

NOTES

1. WELL DESIGN DETAILS ARE BASED ON CORE HOLE AND WELL LOG RECORDS.

HALEY ALDRICH

FLORENCE COPPER, INC.
FLORENCE, ARIZONA

ABANDONMENT SCHEMATIC
OBSERVATION/PERIMETER
WELL M15-GU

SEPTEMBER 2019
SCALE: AS SHOWN

FIGURE 1

OMB No. 2040-0042 Approval Expires 4/30/2022

United States Environmental Protection Agency

WELL REWORK RECORD, PLUGGING AND ABANDONMENT PLAN, OR PLUGGING AND ABANDONMENT AFFIDAVIT

Name and Address, Phone Number and/or Email of Permittee

Florence Copper Project
1575 W Hunt Hwy,
Florence, AZ 85132

Permit or EPA ID Number	API Number	Full Well Name
R9UIC-AZ3-FY11-1		M16-GU

State	County
Arizona	Pinal

Locate well in two directions from nearest lines of quarter section and drilling unit

Surface Location

SW 1/4 of SW 1/4 of Section 28 Township 4S Range 9E

Latitude 33.04735103

Longitude -111.4373562

ft. from (N/S) Line of quarter section

ft. from (E/W) Line of quarter section.

Well Class	Timing of Action (pick one)	Type of Action (pick one)
☐ Class I ☐ Class II ☑ Class III ☐ Class V	☑ Notice Prior to Work Date Expected to Commence March 2021 ☐ Report After Work Date Work Ended	☐ Well Rework ☑ Plugging and Abandonment ☐ Conversion to a Non-Injection Well

Provide a narrative description of the work planned to be performed, or that was performed. Use additional pages as necessary. See instructions.

A workover rig capable of performing the required abandonment operations at the required depths will be moved in and set up over the well. The well casing will be inspected to determine the depth to which the well remains open and if any obstructions are present in the casing; the presence and condition of any existing surface casing will also be documented. If necessary, the well casing will be cleaned out to the bottom of the deepest screen or perforation to enable placement of cement seals.

If surface casing is present, an attempt will be made to remove it. If removal of the surface casing is not feasible, it will be left in the hole and perforated as needed to allow an annular seal to be placed to a depth of at least 25 feet bgs. In areas of agricultural use, the surface casing will be cut at least 5 feet bgs and removed.

If the surface casing cannot be removed, it will be perforated from at least 20 feet below the bedrock-LBFU contact to at least 20 feet above the contact; from at least 20 feet below the base of the MFGU to at least 20 feet above the top of the MFGU; and from at least 25 feet bgs to 5 feet bgs.

A tremie pipe will be used to place Type V cement in the open well from the bottom of the well casing to the top of the well casing. Cement retainers, as described above, will be used to force cement grout into the annulus and behind perforated screen intervals, as necessary.

If the well casing has been obstructed, as much cement as possible will be placed from 100 feet below the LBFU-bedrock contact to the top of the casing.

The volume of Type V cement will be recorded and will not be less than the estimated volume of material required to fill each interval. All cement grout will consist of Type V cement, or equivalent approved in accordance with the UIC Permit.

Certification

I certify under the penalty of law that I have personally examined and am familiar with the information submitted in this document and all attachments and that, based on my inquiry of those individuals immediately responsible for obtaining the information, I believe that the information is true, accurate, and complete. I am aware that there are significant penalties for submitting false information, including the possibliity of fine and imprisonment. (Ref. 40 CFR § 144.32)

Name and Official Title *(Please type or print)*	Signature	Date Signed
Dan Johnson, VP - General Manager		10/3/2019

INSTRUCTIONS FOR FORM 7520-19

This form replaces forms 7520-12 and 7520-14. Use this form only when work is planned or has occurred that affects the well's construction or operation as an injection well, including work on the casing, tubing or packer (or for shallow Class V wells, the subsurface fluid emplacement network). Use one form per injection well. While reports or other information developed by contractors or service companies may be attached, this form must be signed by a responsible entity as described at 40 CFR 144.32. Note: operators closing Class V wells should use Form 7520-17.

NAME, ADDRESS, PHONE AND/OR EMAIL OF PERMITTEE: Enter the name and street address, city/town, state, and ZIP code of the permittee. Also provide an email address (if available) and/or a phone number.

PERMIT OR EPA ID NUMBER: Enter the well identification number or permit number assigned to the well by the EPA or the permitting authority.

API NUMBER: Enter the number assigned by the local jurisdiction (usually a State Oil and Gas Agency) using the American Petroleum Institute standard numbering system.

FULL WELL NAME: Enter the full name of the well or project.

Enter the **STATE** and **COUNTY** where the well is located. For States that do not have counties, use the name of that State's equivalent jurisdiction at a more local level.

WELL LOCATION: Fill in the complete township, range, and section to the nearest quarter-quarter section. A township is north or south of the baseline, and a range is east or west of the principal meridian (e.g., T12N, R34W). Also include the distance, in feet, from the nearest north or south line and nearest east or west line of the quarter-section. Also, enter the **latitude** and **longitude** of the well in decimal degrees, to five or six places if possible; be sure to include a negative sign for the longitude of a well in the Western Hemisphere and a negative sign for the latitude of a well in the Southern Hemisphere.

Enter the **WELL CLASS,** i.e., the class of injection well as defined in 40 CFR 144.6.

TIMING OF THE ACTION: Check ***Notice prior to work*** if the activity has not yet occurred (i.e., is planned). Check ***Report after work*** if the activity described has already occurred. As appropriate, include the date the activity is expected to start or the date the activity was completed. (Note this may not be available, e.g., for a plugging plan submitted with a permit application.)

TYPE OF ACTION: Check the appropriate box to describe the kind of activity being reported. Check ***Well Rework*** for work that was/will be performed on the well after it has already been in operation as an injection well. Check ***Plugging and Abandonment*** to report on plans for or descriptions of final closure/plugging after use as an injection well. Check ***Conversion to a Non-Injection Well*** if the well is to be converted to something other than an injection well.

Provide a **NARRATIVE DESCRIPTION** of the work planned to be performed, or that was performed. The narrative should include a description of the main procedures planned or that occurred during the work activity. A service company report, daily report, or similar document may be attached if it includes all the requested information and is clear and legible.

For well reworks, include the following information: The reason for the well rework; depths of activity; type of activity; changes to injection well configuration, well casing, or cement behind casing; any plug added to the well and its depth; any newly drilled interval and its depth; method(s) to demonstrate that the well has mechanical integrity (as applicable); and any deviations from the approved rework plan (as applicable).

For a well plugging plan, include the following information: Reason for the well plugging; number of plugs placed, and their depths; materials used as plugs (e.g., cast iron bridge plug, cement, cement retainer); method to set plugs; and wait-on-cement times, if any. Also provide one or more cost estimates from an independent firm in the business of plugging and abandoning wells to plug the well as described in the plan.

For well plugging affidavit, include the following information: Reason for the well plugging; number of plugs placed, and their depths; materials used as plugs (e.g., cast iron bridge plug, cement, cement retainer); method to set plugs; wait-on-cement times, if any; and any deviations from the approved plugging plan (if applicable).

For conversion to a non-injection well, include the following information: Depths of activity; type of activity; changes to injection well configuration, well casing, or cement behind casing; any plug added to the well and its depth; any newly drilled interval and its depth; depths of new perforations; and method(s) to demonstrate that the well has mechanical integrity (as applicable).

For all of the above activities, include a well sketch depicting the work, results of well tests/logging performed, service company tickets, and any other available information demonstrating how the work was/is to be performed. Also, specify whether depths are below ground surface, relative to Kelly bushing, etc.

CERTIFICATION: This form must be signed and dated by either: a responsible corporate officer for a corporation, by a general partner for a partnership, by the proprietor of a sole proprietorship, or by a principal executive or ranking elected official for a public agency.

PAPERWORK REDUCTION ACT NOTICE: The public reporting and recordkeeping burden for this collection of information is estimated to average between 6.0 and 7.9 hours per response, depending on the injection well class. Burden means the total time, effort, or financial resource expended by persons to generate, maintain, retain, or disclose or provide information to or for a Federal Agency. This includes the time needed to review instructions; develop, acquire, install, and utilize technology and systems for the purposes of collecting, validating, and verifying information, processing and maintaining information, and disclosing and providing information; adjust the existing ways to comply with any previously applicable instructions and requirements; train personnel to be able to respond to the collection of information; search data sources; complete and review the collection of information; and, transmit or otherwise disclose the information. An agency may not conduct or sponsor, and a person is not required to respond to, a collection of information unless it displays a currently valid OMB control number. Send comments on the Agency's need for this information, the accuracy of the provided burden estimates, and any suggested methods for minimizing respondent burden, including the use of automated collection techniques to Director, Collection Strategies Division, U.S. Environmental Protection Agency (2822), 1200 Pennsylvania Ave., NW., Washington, D.C. 20460. Include the OMB control number in any correspondence. Do not send the completed forms to this address.

Saved by: MNICHOLLS Printed: 7/25/2019 7:20 PM Sheet: HA-FIG-A-L(2)
\\HALEYALDRICH.COM\SHARE\PHX_COMMON\PROJECTS\FLORENCE COPPER\132473 FLORENCE GROUNDWATER PERMITTING\CAD\132473_000-OBSERVATION_WELL_CONSTRUCTION DIAGRAM.DWG

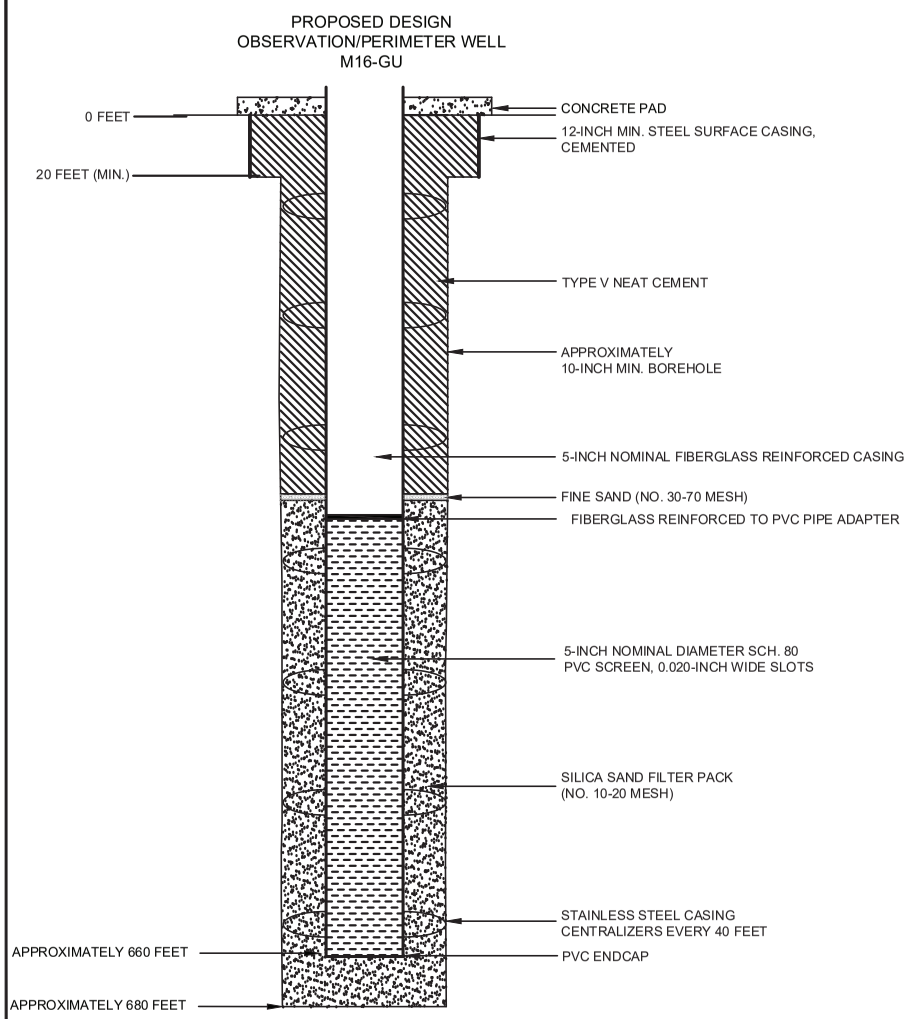

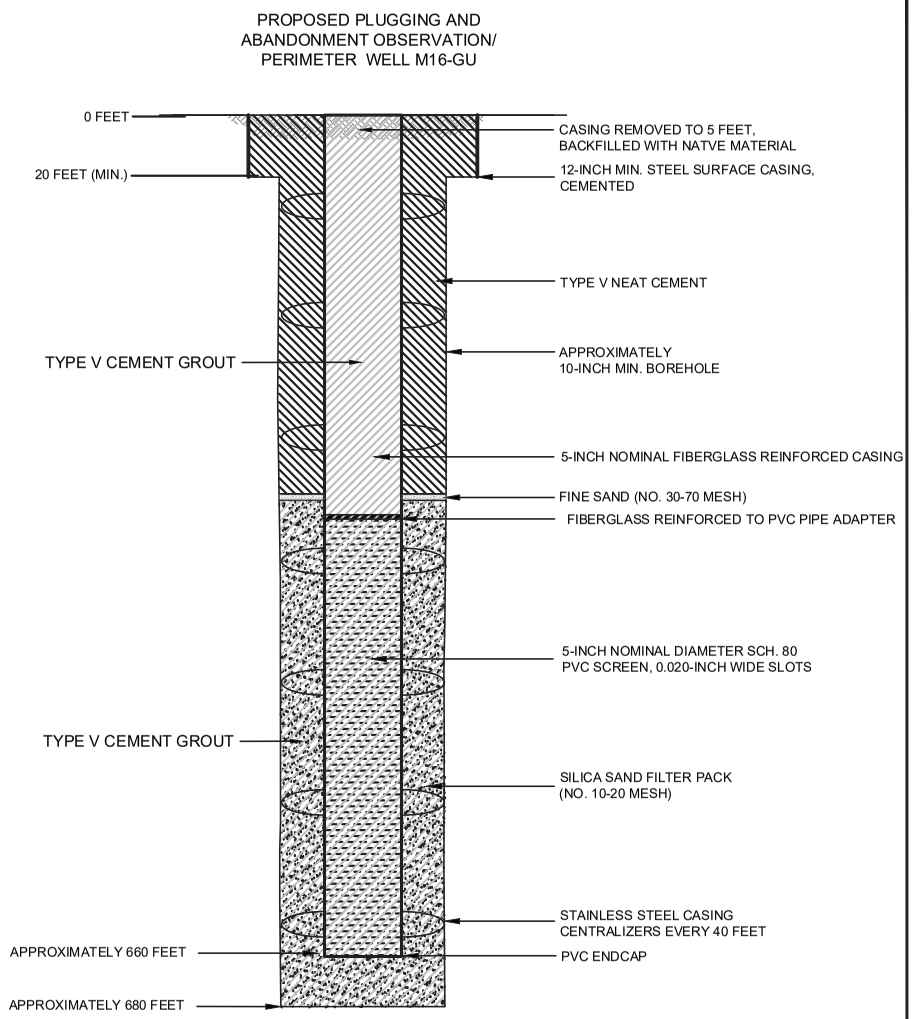

NOTES

1. WELL DESIGN DETAILS ARE BASED ON CORE HOLE AND WELL LOG RECORDS.

HALEY ALDRICH

FLORENCE COPPER, INC.
FLORENCE, ARIZONA

ABANDONMENT SCHEMATIC
OBSERVATION/PERIMETER
WELL M16-GU

SEPTEMBER 2019
SCALE: AS SHOWN

FIGURE 1

OMB No. 2040-0042 Approval Expires 4/30/2022

United States Environmental Protection Agency

WELL REWORK RECORD, PLUGGING AND ABANDONMENT PLAN, OR PLUGGING AND ABANDONMENT AFFIDAVIT

Name and Address, Phone Number and/or Email of Permittee

Florence Copper Project
1575 W Hunt Hwy,
Florence, AZ 85132

Permit or EPA ID Number	API Number	Full Well Name
R9UIC-AZ3-FY11-1		M17-GL

State	County
Arizona	Pinal

Locate well in two directions from nearest lines of quarter section and drilling unit

Latitude 33.04709823

Longitude -111.4368759

Surface Location

SW **1/4 of** SW **1/4 of Section** 28 **Township** 4S **Range** 9E

_____ **ft. from (N/S)** _____ **Line of quarter section**

_____ **ft. from (E/W)** _____ **Line of quarter section.**

Well Class	Timing of Action (pick one)	Type of Action (pick one)
☐ Class I ☐ Class II ☑ Class III ☐ Class V	☑ Notice Prior to Work Date Expected to Commence March 2021 ☐ Report After Work Date Work Ended	☐ Well Rework ☑ Plugging and Abandonment ☐ Conversion to a Non-Injection Well

Provide a narrative description of the work planned to be performed, or that was performed. Use additional pages as necessary. See instructions.

A workover rig capable of performing the required abandonment operations at the required depths will be moved in and set up over the well. The well casing will be inspected to determine the depth to which the well remains open and if any obstructions are present in the casing; the presence and condition of any existing surface casing will also be documented. If necessary, the well casing will be cleaned out to the bottom of the deepest screen or perforation to enable placement of cement seals.

If surface casing is present, an attempt will be made to remove it. If removal of the surface casing is not feasible, it will be left in the hole and perforated as needed to allow an annular seal to be placed to a depth of at least 25 feet bgs. In areas of agricultural use, the surface casing will be cut at least 5 feet bgs and removed.

If the surface casing cannot be removed, it will be perforated from at least 20 feet below the bedrock-LBFU contact to at least 20 feet above the contact; from at least 20 feet below the base of the MFGU to at least 20 feet above the top of the MFGU; and from at least 25 feet bgs to 5 feet bgs.

A tremie pipe will be used to place Type V cement in the open well from the bottom of the well casing to the top of the well casing. Cement retainers, as described above, will be used to force cement grout into the annulus and behind perforated screen intervals, as necessary.

If the well casing has been obstructed, as much cement as possible will be placed from 100 feet below the LBFU-bedrock contact to the top of the casing.

The volume of Type V cement will be recorded and will not be less than the estimated volume of material required to fill each interval. All cement grout will consist of Type V cement, or equivalent approved in accordance with the UIC Permit.

Certification

I certify under the penalty of law that I have personally examined and am familiar with the information submitted in this document and all attachments and that, based on my inquiry of those individuals immediately responsible for obtaining the information, I believe that the information is true, accurate, and complete. I am aware that there are significant penalties for submitting false information, including the possibliity of fine and imprisonment. (Ref. 40 CFR § 144.32)

Name and Official Title *(Please type or print)*	Signature	Date Signed
Dan Johnson, VP - General Manager		10/3/2019

INSTRUCTIONS FOR FORM 7520-19

This form replaces forms 7520-12 and 7520-14. Use this form only when work is planned or has occurred that affects the well's construction or operation as an injection well, including work on the casing, tubing or packer (or for shallow Class V wells, the subsurface fluid emplacement network). Use one form per injection well. While reports or other information developed by contractors or service companies may be attached, this form must be signed by a responsible entity as described at 40 CFR 144.32. Note: operators closing Class V wells should use Form 7520-17.

NAME, ADDRESS, PHONE AND/OR EMAIL OF PERMITTEE: Enter the name and street address, city/town, state, and ZIP code of the permittee. Also provide an email address (if available) and/or a phone number.

PERMIT OR EPA ID NUMBER: Enter the well identification number or permit number assigned to the well by the EPA or the permitting authority.

API NUMBER: Enter the number assigned by the local jurisdiction (usually a State Oil and Gas Agency) using the American Petroleum Institute standard numbering system.

FULL WELL NAME: Enter the full name of the well or project.

Enter the **STATE** and **COUNTY** where the well is located. For States that do not have counties, use the name of that State's equivalent jurisdiction at a more local level.

WELL LOCATION: Fill in the complete township, range, and section to the nearest quarter-quarter section. A township is north or south of the baseline, and a range is east or west of the principal meridian (e.g., T12N, R34W). Also include the distance, in feet, from the nearest north or south line and nearest east or west line of the quarter-section. Also, enter the **latitude** and **longitude** of the well in decimal degrees, to five or six places if possible; be sure to include a negative sign for the longitude of a well in the Western Hemisphere and a negative sign for the latitude of a well in the Southern Hemisphere.

Enter the **WELL CLASS,** i.e., the class of injection well as defined in 40 CFR 144.6.

TIMING OF THE ACTION: Check ***Notice prior to work*** if the activity has not yet occurred (i.e., is planned). Check ***Report after work*** if the activity described has already occurred. As appropriate, include the date the activity is expected to start or the date the activity was completed. (Note this may not be available, e.g., for a plugging plan submitted with a permit application.)

TYPE OF ACTION: Check the appropriate box to describe the kind of activity being reported. Check ***Well Rework*** for work that was/will be performed on the well after it has already been in operation as an injection well. Check ***Plugging and Abandonment*** to report on plans for or descriptions of final closure/plugging after use as an injection well. Check ***Conversion to a Non-Injection Well*** if the well is to be converted to something other than an injection well.

Provide a **NARRATIVE DESCRIPTION** of the work planned to be performed, or that was performed. The narrative should include a description of the main procedures planned or that occurred during the work activity. A service company report, daily report, or similar document may be attached if it includes all the requested information and is clear and legible.

For well reworks, include the following information: The reason for the well rework; depths of activity; type of activity; changes to injection well configuration, well casing, or cement behind casing; any plug added to the well and its depth; any newly drilled interval and its depth; method(s) to demonstrate that the well has mechanical integrity (as applicable); and any deviations from the approved rework plan (as applicable).

For a well plugging plan, include the following information: Reason for the well plugging; number of plugs placed, and their depths; materials used as plugs (e.g., cast iron bridge plug, cement, cement retainer); method to set plugs; and wait-on-cement times, if any. Also provide one or more cost estimates from an independent firm in the business of plugging and abandoning wells to plug the well as described in the plan.

For well plugging affidavit, include the following information: Reason for the well plugging; number of plugs placed, and their depths; materials used as plugs (e.g., cast iron bridge plug, cement, cement retainer); method to set plugs; wait-on-cement times, if any; and any deviations from the approved plugging plan (if applicable).

For conversion to a non-injection well, include the following information: Depths of activity; type of activity; changes to injection well configuration, well casing, or cement behind casing; any plug added to the well and its depth; any newly drilled interval and its depth; depths of new perforations; and method(s) to demonstrate that the well has mechanical integrity (as applicable).

For all of the above activities, include a well sketch depicting the work, results of well tests/logging performed, service company tickets, and any other available information demonstrating how the work was/is to be performed. Also, specify whether depths are below ground surface, relative to Kelly bushing, etc.

CERTIFICATION: This form must be signed and dated by either: a responsible corporate officer for a corporation, by a general partner for a partnership, by the proprietor of a sole proprietorship, or by a principal executive or ranking elected official for a public agency.

PAPERWORK REDUCTION ACT NOTICE: The public reporting and recordkeeping burden for this collection of information is estimated to average between 6.0 and 7.9 hours per response, depending on the injection well class. Burden means the total time, effort, or financial resource expended by persons to generate, maintain, retain, or disclose or provide information to or for a Federal Agency. This includes the time needed to review instructions; develop, acquire, install, and utilize technology and systems for the purposes of collecting, validating, and verifying information, processing and maintaining information, and disclosing and providing information; adjust the existing ways to comply with any previously applicable instructions and requirements; train personnel to be able to respond to the collection of information; search data sources; complete and review the collection of information; and, transmit or otherwise disclose the information. An agency may not conduct or sponsor, and a person is not required to respond to, a collection of information unless it displays a currently valid OMB control number. Send comments on the Agency's need for this information, the accuracy of the provided burden estimates, and any suggested methods for minimizing respondent burden, including the use of automated collection techniques to Director, Collection Strategies Division, U.S. Environmental Protection Agency (2822), 1200 Pennsylvania Ave., NW., Washington, D.C. 20460. Include the OMB control number in any correspondence. Do not send the completed forms to this address.

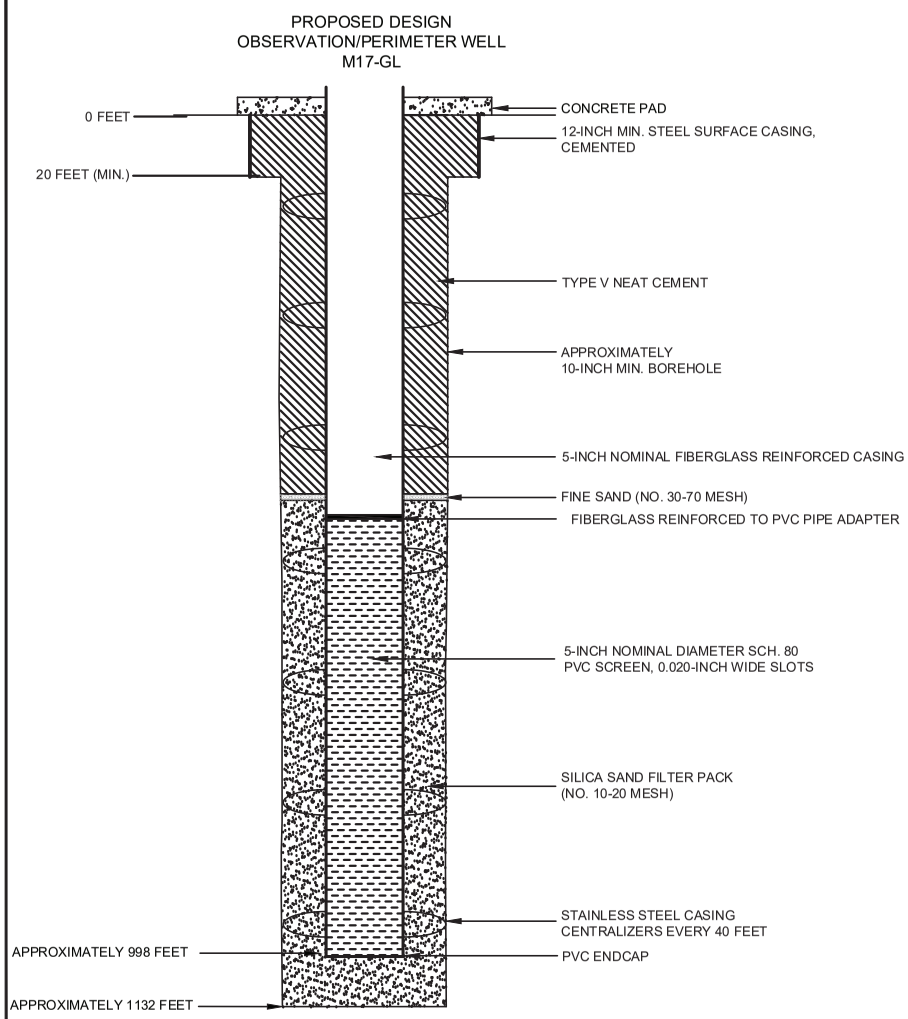

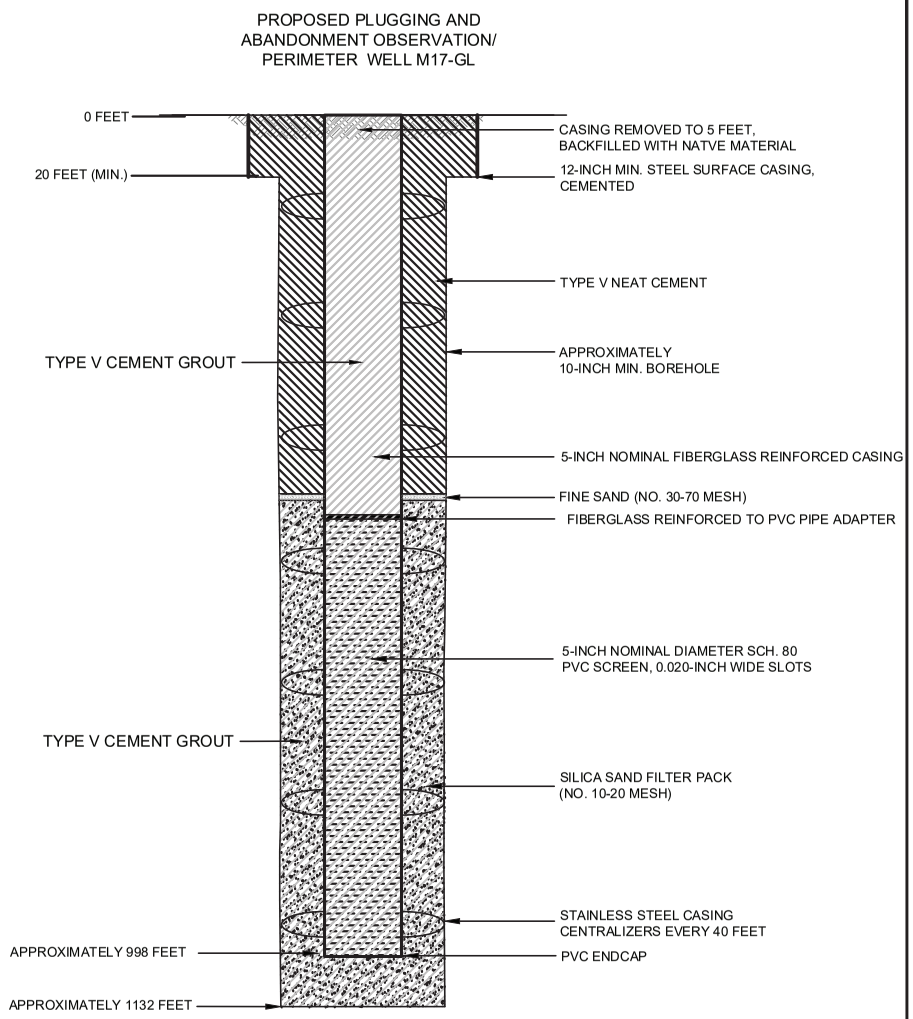

NOTES

1. WELL DESIGN DETAILS ARE BASED ON CORE HOLE AND WELL LOG RECORDS.

HALEY ALDRICH

FLORENCE COPPER, INC.
FLORENCE, ARIZONA

ABANDONMENT SCHEMATIC
OBSERVATION/PERIMETER
WELL M17-GL

SEPTEMBER 2019
SCALE: AS SHOWN

FIGURE 1

OMB No. 2040-0042 Approval Expires 4/30/2022

United States Environmental Protection Agency

WELL REWORK RECORD, PLUGGING AND ABANDONMENT PLAN, OR PLUGGING AND ABANDONMENT AFFIDAVIT

Name and Address, Phone Number and/or Email of Permittee

Florence Copper Project
1575 W Hunt Hwy,
Florence, AZ 85132

Permit or EPA ID Number	API Number	Full Well Name
R9UIC-AZ3-FY11-1		M18-GU

State	County
Arizona	Pinal

Locate well in two directions from nearest lines of quarter section and drilling unit

Surface Location

NE 1/4 of NW 1/4 of Section 33 Township 4S Range 9E

Latitude 33.0438472

Longitude -111.432049

ft. from (N/S) Line of quarter section

ft. from (E/W) Line of quarter section.

Well Class	Timing of Action (pick one)	Type of Action (pick one)
☐ Class I ☐ Class II ☑ Class III ☐ Class V	☑ Notice Prior to Work Date Expected to Commence March 2021 ☐ Report After Work Date Work Ended	☐ Well Rework ☑ Plugging and Abandonment ☐ Conversion to a Non-Injection Well

Provide a narrative description of the work planned to be performed, or that was performed. Use additional pages as necessary. See instructions.

A workover rig capable of performing the required abandonment operations at the required depths will be moved in and set up over the well. The well casing will be inspected to determine the depth to which the well remains open and if any obstructions are present in the casing; the presence and condition of any existing surface casing will also be documented. If necessary, the well casing will be cleaned out to the bottom of the deepest screen or perforation to enable placement of cement seals.

If surface casing is present, an attempt will be made to remove it. If removal of the surface casing is not feasible, it will be left in the hole and perforated as needed to allow an annular seal to be placed to a depth of at least 25 feet bgs. In areas of agricultural use, the surface casing will be cut at least 5 feet bgs and removed.

If the surface casing cannot be removed, it will be perforated from at least 20 feet below the bedrock-LBFU contact to at least 20 feet above the contact; from at least 20 feet below the base of the MFGU to at least 20 feet above the top of the MFGU; and from at least 25 feet bgs to 5 feet bgs.

A tremie pipe will be used to place Type V cement in the open well from the bottom of the well casing to the top of the well casing. Cement retainers, as described above, will be used to force cement grout into the annulus and behind perforated screen intervals, as necessary.

If the well casing has been obstructed, as much cement as possible will be placed from 100 feet below the LBFU-bedrock contact to the top of the casing.

The volume of Type V cement will be recorded and will not be less than the estimated volume of material required to fill each interval. All cement grout will consist of Type V cement, or equivalent approved in accordance with the UIC Permit.

Certification

I certify under the penalty of law that I have personally examined and am familiar with the information submitted in this document and all attachments and that, based on my inquiry of those individuals immediately responsible for obtaining the information, I believe that the information is true, accurate, and complete. I am aware that there are significant penalties for submitting false information, including the possibliity of fine and imprisonment. (Ref. 40 CFR § 144.32)

Name and Official Title *(Please type or print)*	Signature	Date Signed
Dan Johnson, VP - General Manager		10/3/2019

INSTRUCTIONS FOR FORM 7520-19

This form replaces forms 7520-12 and 7520-14. Use this form only when work is planned or has occurred that affects the well's construction or operation as an injection well, including work on the casing, tubing or packer (or for shallow Class V wells, the subsurface fluid emplacement network). Use one form per injection well. While reports or other information developed by contractors or service companies may be attached, this form must be signed by a responsible entity as described at 40 CFR 144.32. Note: operators closing Class V wells should use Form 7520-17.

NAME, ADDRESS, PHONE AND/OR EMAIL OF PERMITTEE: Enter the name and street address, city/town, state, and ZIP code of the permittee. Also provide an email address (if available) and/or a phone number.

PERMIT OR EPA ID NUMBER: Enter the well identification number or permit number assigned to the well by the EPA or the permitting authority.

API NUMBER: Enter the number assigned by the local jurisdiction (usually a State Oil and Gas Agency) using the American Petroleum Institute standard numbering system.

FULL WELL NAME: Enter the full name of the well or project.

Enter the **STATE** and **COUNTY** where the well is located. For States that do not have counties, use the name of that State's equivalent jurisdiction at a more local level.

WELL LOCATION: Fill in the complete township, range, and section to the nearest quarter-quarter section. A township is north or south of the baseline, and a range is east or west of the principal meridian (e.g., T12N, R34W). Also include the distance, in feet, from the nearest north or south line and nearest east or west line of the quarter-section. Also, enter the **latitude** and **longitude** of the well in decimal degrees, to five or six places if possible; be sure to include a negative sign for the longitude of a well in the Western Hemisphere and a negative sign for the latitude of a well in the Southern Hemisphere.

Enter the **WELL CLASS,** i.e., the class of injection well as defined in 40 CFR 144.6.

TIMING OF THE ACTION: Check ***Notice prior to work*** if the activity has not yet occurred (i.e., is planned). Check ***Report after work*** if the activity described has already occurred. As appropriate, include the date the activity is expected to start or the date the activity was completed. (Note this may not be available, e.g., for a plugging plan submitted with a permit application.)

TYPE OF ACTION: Check the appropriate box to describe the kind of activity being reported. Check ***Well Rework*** for work that was/will be performed on the well after it has already been in operation as an injection well. Check ***Plugging and Abandonment*** to report on plans for or descriptions of final closure/plugging after use as an injection well. Check ***Conversion to a Non-Injection Well*** if the well is to be converted to something other than an injection well.

Provide a **NARRATIVE DESCRIPTION** of the work planned to be performed, or that was performed. The narrative should include a description of the main procedures planned or that occurred during the work activity. A service company report, daily report, or similar document may be attached if it includes all the requested information and is clear and legible.

For well reworks, include the following information: The reason for the well rework; depths of activity; type of activity; changes to injection well configuration, well casing, or cement behind casing; any plug added to the well and its depth; any newly drilled interval and its depth; method(s) to demonstrate that the well has mechanical integrity (as applicable); and any deviations from the approved rework plan (as applicable).

For a well plugging plan, include the following information: Reason for the well plugging; number of plugs placed, and their depths; materials used as plugs (e.g., cast iron bridge plug, cement, cement retainer); method to set plugs; and wait-on-cement times, if any. Also provide one or more cost estimates from an independent firm in the business of plugging and abandoning wells to plug the well as described in the plan.

For well plugging affidavit, include the following information: Reason for the well plugging; number of plugs placed, and their depths; materials used as plugs (e.g., cast iron bridge plug, cement, cement retainer); method to set plugs; wait-on-cement times, if any; and any deviations from the approved plugging plan (if applicable).

For conversion to a non-injection well, include the following information: Depths of activity; type of activity; changes to injection well configuration, well casing, or cement behind casing; any plug added to the well and its depth; any newly drilled interval and its depth; depths of new perforations; and method(s) to demonstrate that the well has mechanical integrity (as applicable).

For all of the above activities, include a well sketch depicting the work, results of well tests/logging performed, service company tickets, and any other available information demonstrating how the work was/is to be performed. Also, specify whether depths are below ground surface, relative to Kelly bushing, etc.

CERTIFICATION: This form must be signed and dated by either: a responsible corporate officer for a corporation, by a general partner for a partnership, by the proprietor of a sole proprietorship, or by a principal executive or ranking elected official for a public agency.

PAPERWORK REDUCTION ACT NOTICE: The public reporting and recordkeeping burden for this collection of information is estimated to average between 6.0 and 7.9 hours per response, depending on the injection well class. Burden means the total time, effort, or financial resource expended by persons to generate, maintain, retain, or disclose or provide information to or for a Federal Agency. This includes the time needed to review instructions; develop, acquire, install, and utilize technology and systems for the purposes of collecting, validating, and verifying information, processing and maintaining information, and disclosing and providing information; adjust the existing ways to comply with any previously applicable instructions and requirements; train personnel to be able to respond to the collection of information; search data sources; complete and review the collection of information; and, transmit or otherwise disclose the information. An agency may not conduct or sponsor, and a person is not required to respond to, a collection of information unless it displays a currently valid OMB control number. Send comments on the Agency's need for this information, the accuracy of the provided burden estimates, and any suggested methods for minimizing respondent burden, including the use of automated collection techniques to Director, Collection Strategies Division, U.S. Environmental Protection Agency (2822), 1200 Pennsylvania Ave., NW., Washington, D.C. 20460. Include the OMB control number in any correspondence. Do not send the completed forms to this address.

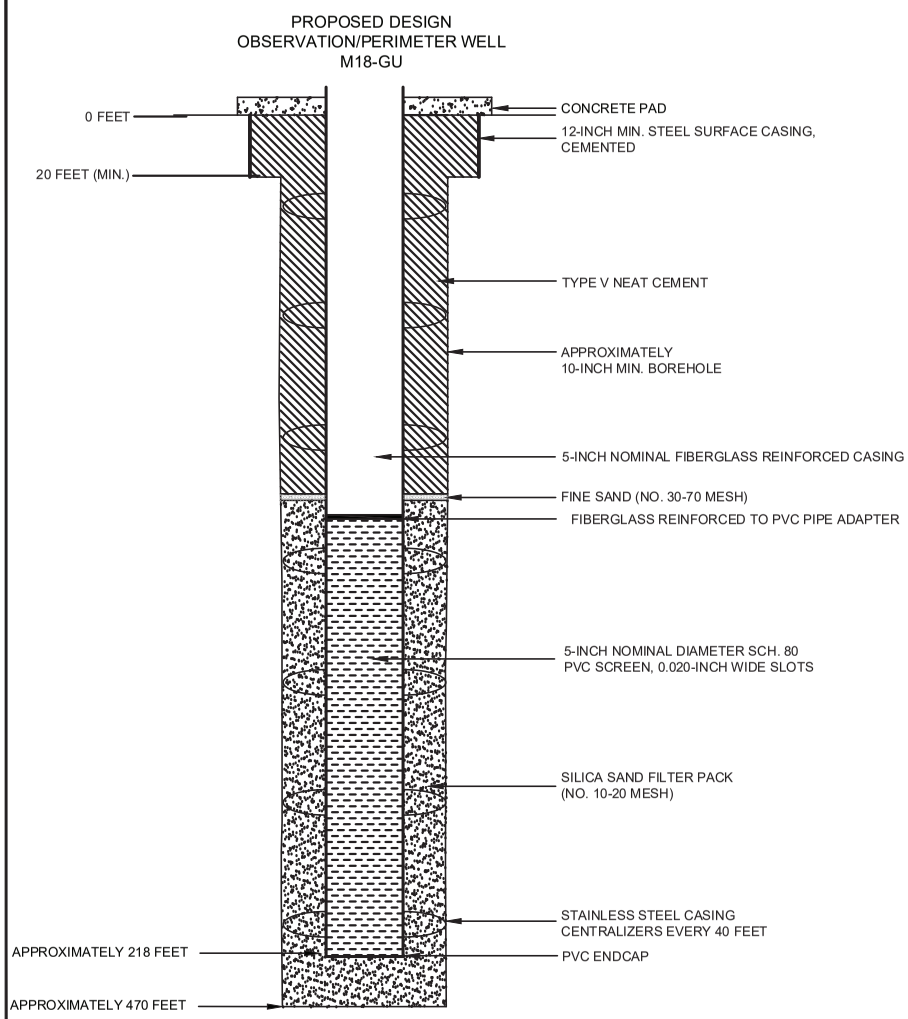

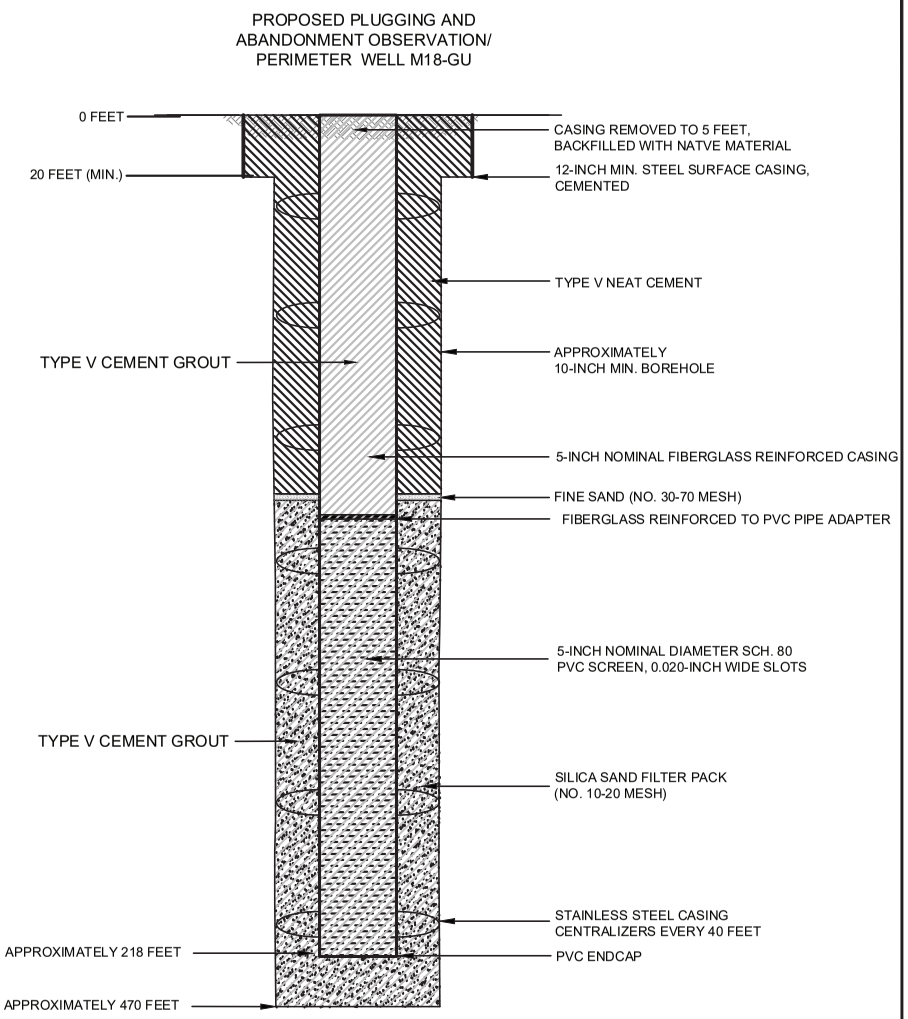

NOTES

1. WELL DESIGN DETAILS ARE BASED ON CORE HOLE AND WELL LOG RECORDS.

HALEY ALDRICH

FLORENCE COPPER, INC.
FLORENCE, ARIZONA

ABANDONMENT SCHEMATIC
OBSERVATION/PERIMETER
WELL M18-GU

SEPTEMBER 2019
SCALE: AS SHOWN

FIGURE 1

OMB No. 2040-0042 Approval Expires 4/30/2022

United States Environmental Protection Agency

WELL REWORK RECORD, PLUGGING AND ABANDONMENT PLAN, OR PLUGGING AND ABANDONMENT AFFIDAVIT

Name and Address, Phone Number and/or Email of Permittee

Florence Copper Project
1575 W Hunt Hwy,
Florence, AZ 85132

Permit or EPA ID Number	API Number	Full Well Name
R9UIC-AZ3-FY11-1		M19-LBF

State	County
Arizona	Pinal

Locate well in two directions from nearest lines of quarter section and drilling unit

Latitude 33.05368298

Surface Location

SE **1/4 of** NW **1/4 of Section** 28 **Township** 4S **Range** 9E

Longitude -111.4304606

_____ **ft. from (N/S)** _____ **Line of quarter section**

_____ **ft. from (E/W)** _____ **Line of quarter section.**

Well Class	Timing of Action (pick one)	Type of Action (pick one)
☐ Class I ☐ Class II ☑ Class III ☐ Class V	☑ Notice Prior to Work Date Expected to Commence March 2021 ☐ Report After Work Date Work Ended	☐ Well Rework ☑ Plugging and Abandonment ☐ Conversion to a Non-Injection Well

Provide a narrative description of the work planned to be performed, or that was performed. Use additional pages as necessary. See instructions.

A workover rig capable of performing the required abandonment operations at the required depths will be moved in and set up over the well. The well casing will be inspected to determine the depth to which the well remains open and if any obstructions are present in the casing; the presence and condition of any existing surface casing will also be documented. If necessary, the well casing will be cleaned out to the bottom of the deepest screen or perforation to enable placement of cement seals.

If surface casing is present, an attempt will be made to remove it. If removal of the surface casing is not feasible, it will be left in the hole and perforated as needed to allow an annular seal to be placed to a depth of at least 25 feet bgs. In areas of agricultural use, the surface casing will be cut at least 5 feet bgs and removed.

If the surface casing cannot be removed, it will be perforated from at least 20 feet below the bedrock-LBFU contact to at least 20 feet above the contact; from at least 20 feet below the base of the MFGU to at least 20 feet above the top of the MFGU; and from at least 25 feet bgs to 5 feet bgs.

A tremie pipe will be used to place Type V cement in the open well from the bottom of the well casing to the top of the well casing. Cement retainers, as described above, will be used to force cement grout into the annulus and behind perforated screen intervals, as necessary.

If the well casing has been obstructed, as much cement as possible will be placed from 100 feet below the LBFU-bedrock contact to the top of the casing.

The volume of Type V cement will be recorded and will not be less than the estimated volume of material required to fill each interval. All cement grout will consist of Type V cement, or equivalent approved in accordance with the UIC Permit.

Certification

I certify under the penalty of law that I have personally examined and am familiar with the information submitted in this document and all attachments and that, based on my inquiry of those individuals immediately responsible for obtaining the information, I believe that the information is true, accurate, and complete. I am aware that there are significant penalties for submitting false information, including the possibliity of fine and imprisonment. (Ref. 40 CFR § 144.32)

Name and Official Title *(Please type or print)*	Signature	Date Signed
Dan Johnson, VP - General Manager		10/3/2019

INSTRUCTIONS FOR FORM 7520-19

This form replaces forms 7520-12 and 7520-14. Use this form only when work is planned or has occurred that affects the well's construction or operation as an injection well, including work on the casing, tubing or packer (or for shallow Class V wells, the subsurface fluid emplacement network). Use one form per injection well. While reports or other information developed by contractors or service companies may be attached, this form must be signed by a responsible entity as described at 40 CFR 144.32. Note: operators closing Class V wells should use Form 7520-17.

NAME, ADDRESS, PHONE AND/OR EMAIL OF PERMITTEE: Enter the name and street address, city/town, state, and ZIP code of the permittee. Also provide an email address (if available) and/or a phone number.

PERMIT OR EPA ID NUMBER: Enter the well identification number or permit number assigned to the well by the EPA or the permitting authority.

API NUMBER: Enter the number assigned by the local jurisdiction (usually a State Oil and Gas Agency) using the American Petroleum Institute standard numbering system.

FULL WELL NAME: Enter the full name of the well or project.

Enter the **STATE** and **COUNTY** where the well is located. For States that do not have counties, use the name of that State's equivalent jurisdiction at a more local level.

WELL LOCATION: Fill in the complete township, range, and section to the nearest quarter-quarter section. A township is north or south of the baseline, and a range is east or west of the principal meridian (e.g., T12N, R34W). Also include the distance, in feet, from the nearest north or south line and nearest east or west line of the quarter-section. Also, enter the **latitude** and **longitude** of the well in decimal degrees, to five or six places if possible; be sure to include a negative sign for the longitude of a well in the Western Hemisphere and a negative sign for the latitude of a well in the Southern Hemisphere.

Enter the **WELL CLASS,** i.e., the class of injection well as defined in 40 CFR 144.6.

TIMING OF THE ACTION: Check ***Notice prior to work*** if the activity has not yet occurred (i.e., is planned). Check ***Report after work*** if the activity described has already occurred. As appropriate, include the date the activity is expected to start or the date the activity was completed. (Note this may not be available, e.g., for a plugging plan submitted with a permit application.)

TYPE OF ACTION: Check the appropriate box to describe the kind of activity being reported. Check ***Well Rework*** for work that was/will be performed on the well after it has already been in operation as an injection well. Check ***Plugging and Abandonment*** to report on plans for or descriptions of final closure/plugging after use as an injection well. Check ***Conversion to a Non-Injection Well*** if the well is to be converted to something other than an injection well.

Provide a **NARRATIVE DESCRIPTION** of the work planned to be performed, or that was performed. The narrative should include a description of the main procedures planned or that occurred during the work activity. A service company report, daily report, or similar document may be attached if it includes all the requested information and is clear and legible.

For well reworks, include the following information: The reason for the well rework; depths of activity; type of activity; changes to injection well configuration, well casing, or cement behind casing; any plug added to the well and its depth; any newly drilled interval and its depth; method(s) to demonstrate that the well has mechanical integrity (as applicable); and any deviations from the approved rework plan (as applicable).

For a well plugging plan, include the following information: Reason for the well plugging; number of plugs placed, and their depths; materials used as plugs (e.g., cast iron bridge plug, cement, cement retainer); method to set plugs; and wait-on-cement times, if any. Also provide one or more cost estimates from an independent firm in the business of plugging and abandoning wells to plug the well as described in the plan.

For well plugging affidavit, include the following information: Reason for the well plugging; number of plugs placed, and their depths; materials used as plugs (e.g., cast iron bridge plug, cement, cement retainer); method to set plugs; wait-on-cement times, if any; and any deviations from the approved plugging plan (if applicable).

For conversion to a non-injection well, include the following information: Depths of activity; type of activity; changes to injection well configuration, well casing, or cement behind casing; any plug added to the well and its depth; any newly drilled interval and its depth; depths of new perforations; and method(s) to demonstrate that the well has mechanical integrity (as applicable).

For all of the above activities, include a well sketch depicting the work, results of well tests/logging performed, service company tickets, and any other available information demonstrating how the work was/is to be performed. Also, specify whether depths are below ground surface, relative to Kelly bushing, etc.

CERTIFICATION: This form must be signed and dated by either: a responsible corporate officer for a corporation, by a general partner for a partnership, by the proprietor of a sole proprietorship, or by a principal executive or ranking elected official for a public agency.

PAPERWORK REDUCTION ACT NOTICE: The public reporting and recordkeeping burden for this collection of information is estimated to average between 6.0 and 7.9 hours per response, depending on the injection well class. Burden means the total time, effort, or financial resource expended by persons to generate, maintain, retain, or disclose or provide information to or for a Federal Agency. This includes the time needed to review instructions; develop, acquire, install, and utilize technology and systems for the purposes of collecting, validating, and verifying information, processing and maintaining information, and disclosing and providing information; adjust the existing ways to comply with any previously applicable instructions and requirements; train personnel to be able to respond to the collection of information; search data sources; complete and review the collection of information; and, transmit or otherwise disclose the information. An agency may not conduct or sponsor, and a person is not required to respond to, a collection of information unless it displays a currently valid OMB control number. Send comments on the Agency's need for this information, the accuracy of the provided burden estimates, and any suggested methods for minimizing respondent burden, including the use of automated collection techniques to Director, Collection Strategies Division, U.S. Environmental Protection Agency (2822), 1200 Pennsylvania Ave., NW., Washington, D.C. 20460. Include the OMB control number in any correspondence. Do not send the completed forms to this address.

Saved by: MNICHOLLS Printed: 7/25/2019 7:20 PM Sheet: HA-FIG-A-L(2)
\\HALEYALDRICH.COM\SHARE\PHX_COMMON\PROJECTS\FLORENCE COPPER\132473 FLORENCE GROUNDWATER PERMITTING\CAD\132473_000-OBSERVATION_WELL_CONSTRUCTION DIAGRAM.DWG

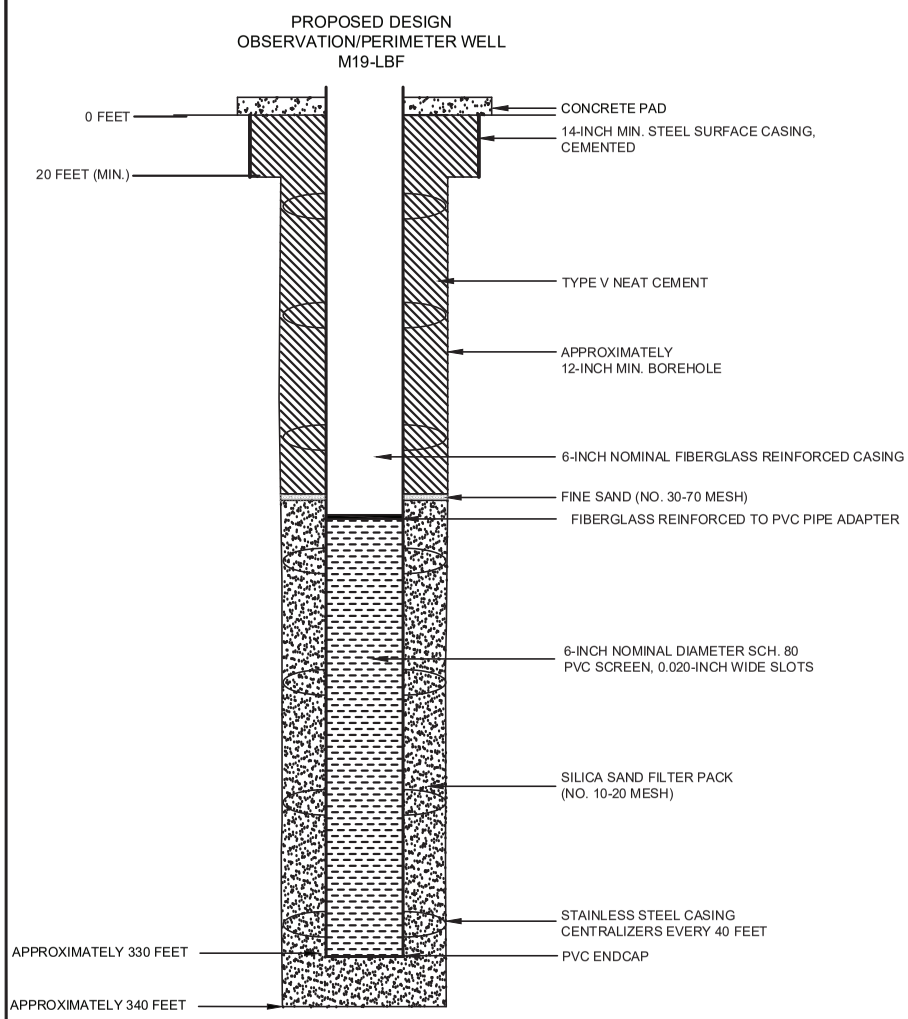

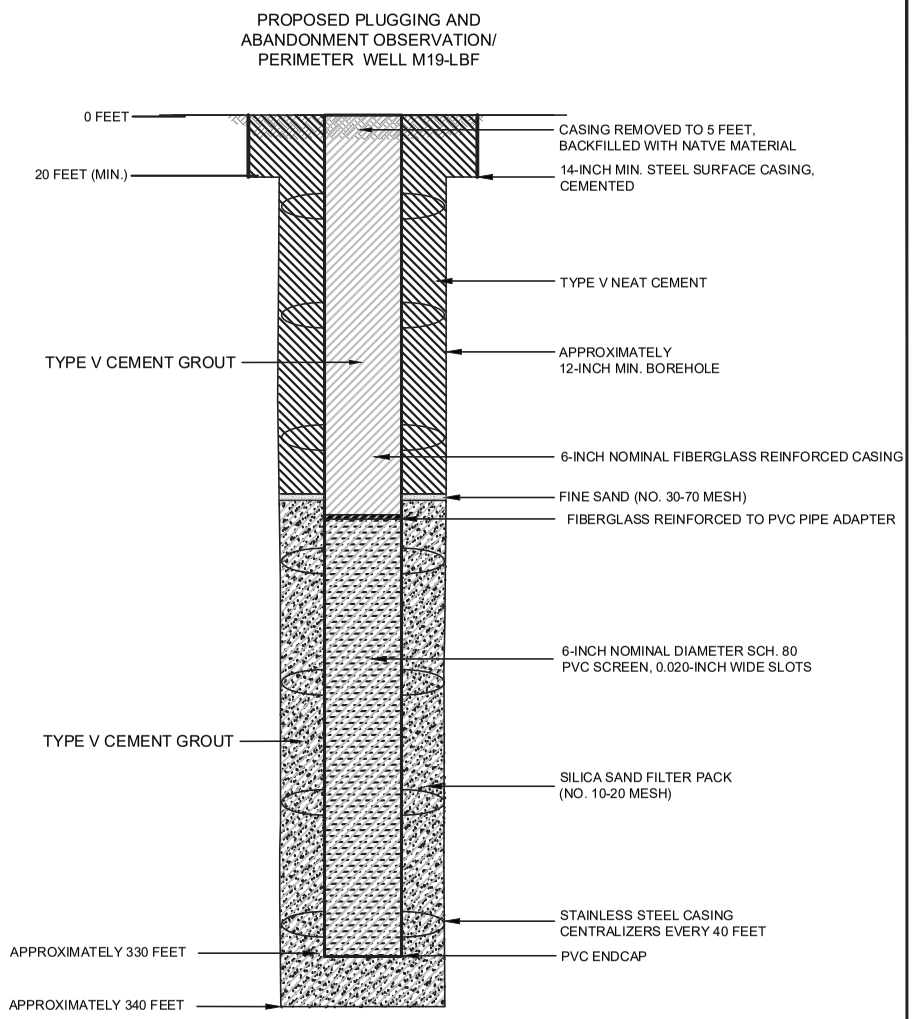

NOTES

1. WELL DESIGN DETAILS ARE BASED ON CORE HOLE AND WELL LOG RECORDS.

HALEY ALDRICH

FLORENCE COPPER, INC.
FLORENCE, ARIZONA

ABANDONMENT SCHEMATIC
OBSERVATION/PERIMETER
WELL M19-LBF

SEPTEMBER 2019
SCALE: AS SHOWN

FIGURE 1

OMB No. 2040-0042 Approval Expires 4/30/2022

United States Environmental Protection Agency

WELL REWORK RECORD, PLUGGING AND ABANDONMENT PLAN, OR PLUGGING AND ABANDONMENT AFFIDAVIT

Name and Address, Phone Number and/or Email of Permittee

Florence Copper Project
1575 W Hunt Hwy,
Florence, AZ 85132

Permit or EPA ID Number	API Number	Full Well Name
R9UIC-AZ3-FY11-1		M20-O

State	County
Arizona	Pinal

Locate well in two directions from nearest lines of quarter section and drilling unit

Latitude 33.05366685

Longitude -111.4312586

Surface Location

SE **1/4 of** NW **1/4 of Section** 28 **Township** 4S **Range** 9E

_____ **ft. from (N/S)** _____ **Line of quarter section**

_____ **ft. from (E/W)** _____ **Line of quarter section.**

Well Class	Timing of Action (pick one)	Type of Action (pick one)
☐ Class I ☐ Class II ☑ Class III ☐ Class V	☑ Notice Prior to Work Date Expected to Commence March 2021 ☐ Report After Work Date Work Ended	☐ Well Rework ☑ Plugging and Abandonment ☐ Conversion to a Non-Injection Well

Provide a narrative description of the work planned to be performed, or that was performed. Use additional pages as necessary. See instructions.

A workover rig capable of performing the required abandonment operations at the required depths will be moved in and set up over the well. The well casing will be inspected to determine the depth to which the well remains open and if any obstructions are present in the casing; the presence and condition of any existing surface casing will also be documented. If necessary, the well casing will be cleaned out to the bottom of the deepest screen or perforation to enable placement of cement seals.

If surface casing is present, an attempt will be made to remove it. If removal of the surface casing is not feasible, it will be left in the hole and perforated as needed to allow an annular seal to be placed to a depth of at least 25 feet bgs. In areas of agricultural use, the surface casing will be cut at least 5 feet bgs and removed.

If the surface casing cannot be removed, it will be perforated from at least 20 feet below the bedrock-LBFU contact to at least 20 feet above the contact; from at least 20 feet below the base of the MFGU to at least 20 feet above the top of the MFGU; and from at least 25 feet bgs to 5 feet bgs.

A tremie pipe will be used to place Type V cement in the open well from the bottom of the well casing to the top of the well casing. Cement retainers, as described above, will be used to force cement grout into the annulus and behind perforated screen intervals, as necessary.

If the well casing has been obstructed, as much cement as possible will be placed from 100 feet below the LBFU-bedrock contact to the top of the casing.

The volume of Type V cement will be recorded and will not be less than the estimated volume of material required to fill each interval. All cement grout will consist of Type V cement, or equivalent approved in accordance with the UIC Permit.

Certification

I certify under the penalty of law that I have personally examined and am familiar with the information submitted in this document and all attachments and that, based on my inquiry of those individuals immediately responsible for obtaining the information, I believe that the information is true, accurate, and complete. I am aware that there are significant penalties for submitting false information, including the possibliity of fine and imprisonment. (Ref. 40 CFR § 144.32)

Name and Official Title *(Please type or print)*	Signature	Date Signed
Dan Johnson, VP - General Manager		10/3/2019

INSTRUCTIONS FOR FORM 7520-19

This form replaces forms 7520-12 and 7520-14. Use this form only when work is planned or has occurred that affects the well's construction or operation as an injection well, including work on the casing, tubing or packer (or for shallow Class V wells, the subsurface fluid emplacement network). Use one form per injection well. While reports or other information developed by contractors or service companies may be attached, this form must be signed by a responsible entity as described at 40 CFR 144.32. Note: operators closing Class V wells should use Form 7520-17.

NAME, ADDRESS, PHONE AND/OR EMAIL OF PERMITTEE: Enter the name and street address, city/town, state, and ZIP code of the permittee. Also provide an email address (if available) and/or a phone number.

PERMIT OR EPA ID NUMBER: Enter the well identification number or permit number assigned to the well by the EPA or the permitting authority.

API NUMBER: Enter the number assigned by the local jurisdiction (usually a State Oil and Gas Agency) using the American Petroleum Institute standard numbering system.

FULL WELL NAME: Enter the full name of the well or project.

Enter the **STATE** and **COUNTY** where the well is located. For States that do not have counties, use the name of that State's equivalent jurisdiction at a more local level.

WELL LOCATION: Fill in the complete township, range, and section to the nearest quarter-quarter section. A township is north or south of the baseline, and a range is east or west of the principal meridian (e.g., T12N, R34W). Also include the distance, in feet, from the nearest north or south line and nearest east or west line of the quarter-section. Also, enter the **latitude** and **longitude** of the well in decimal degrees, to five or six places if possible; be sure to include a negative sign for the longitude of a well in the Western Hemisphere and a negative sign for the latitude of a well in the Southern Hemisphere.

Enter the **WELL CLASS,** i.e., the class of injection well as defined in 40 CFR 144.6.

TIMING OF THE ACTION: Check ***Notice prior to work*** if the activity has not yet occurred (i.e., is planned). Check ***Report after work*** if the activity described has already occurred. As appropriate, include the date the activity is expected to start or the date the activity was completed. (Note this may not be available, e.g., for a plugging plan submitted with a permit application.)

TYPE OF ACTION: Check the appropriate box to describe the kind of activity being reported. Check ***Well Rework*** for work that was/will be performed on the well after it has already been in operation as an injection well. Check ***Plugging and Abandonment*** to report on plans for or descriptions of final closure/plugging after use as an injection well. Check ***Conversion to a Non-Injection Well*** if the well is to be converted to something other than an injection well.

Provide a **NARRATIVE DESCRIPTION** of the work planned to be performed, or that was performed. The narrative should include a description of the main procedures planned or that occurred during the work activity. A service company report, daily report, or similar document may be attached if it includes all the requested information and is clear and legible.

For well reworks, include the following information: The reason for the well rework; depths of activity; type of activity; changes to injection well configuration, well casing, or cement behind casing; any plug added to the well and its depth; any newly drilled interval and its depth; method(s) to demonstrate that the well has mechanical integrity (as applicable); and any deviations from the approved rework plan (as applicable).

For a well plugging plan, include the following information: Reason for the well plugging; number of plugs placed, and their depths; materials used as plugs (e.g., cast iron bridge plug, cement, cement retainer); method to set plugs; and wait-on-cement times, if any. Also provide one or more cost estimates from an independent firm in the business of plugging and abandoning wells to plug the well as described in the plan.

For well plugging affidavit, include the following information: Reason for the well plugging; number of plugs placed, and their depths; materials used as plugs (e.g., cast iron bridge plug, cement, cement retainer); method to set plugs; wait-on-cement times, if any; and any deviations from the approved plugging plan (if applicable).

For conversion to a non-injection well, include the following information: Depths of activity; type of activity; changes to injection well configuration, well casing, or cement behind casing; any plug added to the well and its depth; any newly drilled interval and its depth; depths of new perforations; and method(s) to demonstrate that the well has mechanical integrity (as applicable).

For all of the above activities, include a well sketch depicting the work, results of well tests/logging performed, service company tickets, and any other available information demonstrating how the work was/is to be performed. Also, specify whether depths are below ground surface, relative to Kelly bushing, etc.

CERTIFICATION: This form must be signed and dated by either: a responsible corporate officer for a corporation, by a general partner for a partnership, by the proprietor of a sole proprietorship, or by a principal executive or ranking elected official for a public agency.

PAPERWORK REDUCTION ACT NOTICE: The public reporting and recordkeeping burden for this collection of information is estimated to average between 6.0 and 7.9 hours per response, depending on the injection well class. Burden means the total time, effort, or financial resource expended by persons to generate, maintain, retain, or disclose or provide information to or for a Federal Agency. This includes the time needed to review instructions; develop, acquire, install, and utilize technology and systems for the purposes of collecting, validating, and verifying information, processing and maintaining information, and disclosing and providing information; adjust the existing ways to comply with any previously applicable instructions and requirements; train personnel to be able to respond to the collection of information; search data sources; complete and review the collection of information; and, transmit or otherwise disclose the information. An agency may not conduct or sponsor, and a person is not required to respond to, a collection of information unless it displays a currently valid OMB control number. Send comments on the Agency's need for this information, the accuracy of the provided burden estimates, and any suggested methods for minimizing respondent burden, including the use of automated collection techniques to Director, Collection Strategies Division, U.S. Environmental Protection Agency (2822), 1200 Pennsylvania Ave., NW., Washington, D.C. 20460. Include the OMB control number in any correspondence. Do not send the completed forms to this address.

Saved by: MNICHOLLS Printed: 7/25/2019 7:20 PM Sheet: HA-FIG-A-L(2)
\\HALEYALDRICH.COM\SHARE\PHX_COMMON\PROJECTS\FLORENCE COPPER\132473 FLORENCE GROUNDWATER PERMITTING\CAD\132473_000-OBSERVATION_WELL_CONSTRUCTION DIAGRAM.DWG

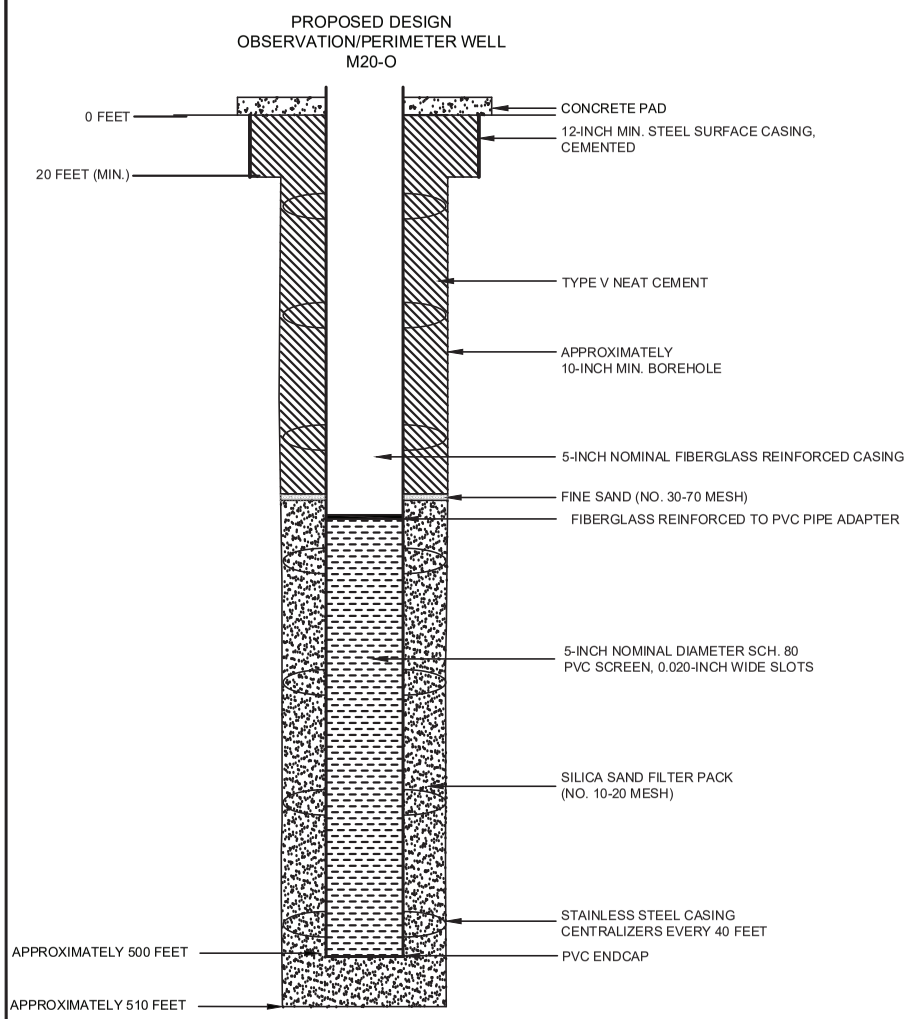

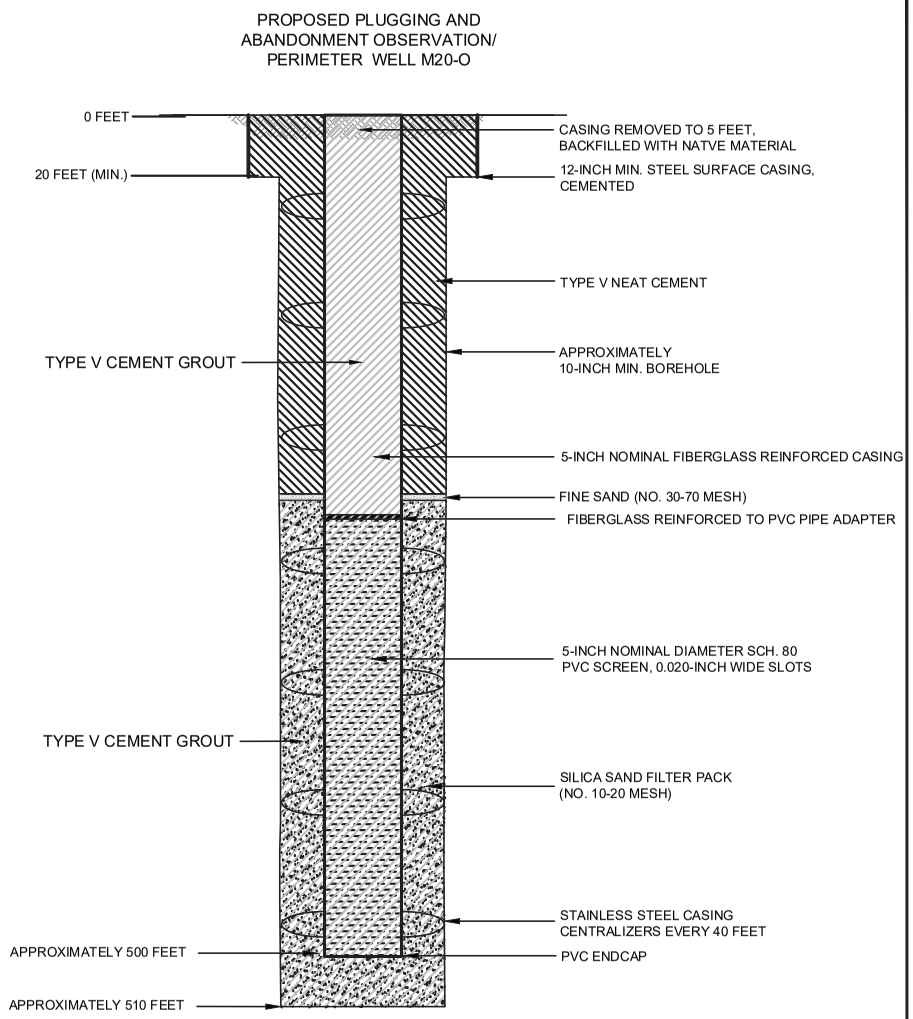

NOTES

1. WELL DESIGN DETAILS ARE BASED ON CORE HOLE AND WELL LOG RECORDS.

HALEY ALDRICH

FLORENCE COPPER, INC.
FLORENCE, ARIZONA

ABANDONMENT SCHEMATIC
OBSERVATION/PERIMETER
WELL M20-O

SEPTEMBER 2019
SCALE: AS SHOWN

FIGURE 1

OMB No. 2040-0042 Approval Expires 4/30/2022

United States Environmental Protection Agency

EPA

WELL REWORK RECORD, PLUGGING AND ABANDONMENT PLAN, OR PLUGGING AND ABANDONMENT AFFIDAVIT

Name and Address, Phone Number and/or Email of Permittee

Florence Copper Project
1575 W Hunt Hwy,
Florence, AZ 85132

Permit or EPA ID Number	API Number	Full Well Name
R9UIC-AZ3-FY11-1		M21-UBF

State	County
Arizona	Pinal

Locate well in two directions from nearest lines of quarter section and drilling unit

Latitude 33.05354314

Longitude -111.4304767

Surface Location

SE **1/4 of** NW **1/4 of Section** 28 **Township** 4S **Range** 9E

_____ **ft. from (N/S)** _____ **Line of quarter section**

_____ **ft. from (E/W)** _____ **Line of quarter section.**

Well Class	Timing of Action (pick one)	Type of Action (pick one)
☐ Class I ☐ Class II ☑ Class III ☐ Class V	☑ Notice Prior to Work Date Expected to Commence March 2021 ☐ Report After Work Date Work Ended	☐ Well Rework ☑ Plugging and Abandonment ☐ Conversion to a Non-Injection Well

Provide a narrative description of the work planned to be performed, or that was performed. Use additional pages as necessary. See instructions.

A workover rig capable of performing the required abandonment operations at the required depths will be moved in and set up over the well. The well casing will be inspected to determine the depth to which the well remains open and if any obstructions are present in the casing; the presence and condition of any existing surface casing will also be documented. If necessary, the well casing will be cleaned out to the bottom of the deepest screen or perforation to enable placement of cement seals.

If surface casing is present, an attempt will be made to remove it. If removal of the surface casing is not feasible, it will be left in the hole and perforated as needed to allow an annular seal to be placed to a depth of at least 25 feet bgs. In areas of agricultural use, the surface casing will be cut at least 5 feet bgs and removed.

If the surface casing cannot be removed, it will be perforated from at least 20 feet below the bedrock-LBFU contact to at least 20 feet above the contact; from at least 20 feet below the base of the MFGU to at least 20 feet above the top of the MFGU; and from at least 25 feet bgs to 5 feet bgs.

A tremie pipe will be used to place Type V cement in the open well from the bottom of the well casing to the top of the well casing. Cement retainers, as described above, will be used to force cement grout into the annulus and behind perforated screen intervals, as necessary.

If the well casing has been obstructed, as much cement as possible will be placed from 100 feet below the LBFU-bedrock contact to the top of the casing.

The volume of Type V cement will be recorded and will not be less than the estimated volume of material required to fill each interval. All cement grout will consist of Type V cement, or equivalent approved in accordance with the UIC Permit.

Certification

I certify under the penalty of law that I have personally examined and am familiar with the information submitted in this document and all attachments and that, based on my inquiry of those individuals immediately responsible for obtaining the information, I believe that the information is true, accurate, and complete. I am aware that there are significant penalties for submitting false information, including the possibliity of fine and imprisonment. (Ref. 40 CFR § 144.32)

Name and Official Title *(Please type or print)*	Signature	Date Signed
Dan Johnson, VP - General Manager		10/3/2019

INSTRUCTIONS FOR FORM 7520-19

This form replaces forms 7520-12 and 7520-14. Use this form only when work is planned or has occurred that affects the well's construction or operation as an injection well, including work on the casing, tubing or packer (or for shallow Class V wells, the subsurface fluid emplacement network). Use one form per injection well. While reports or other information developed by contractors or service companies may be attached, this form must be signed by a responsible entity as described at 40 CFR 144.32. Note: operators closing Class V wells should use Form 7520-17.

NAME, ADDRESS, PHONE AND/OR EMAIL OF PERMITTEE: Enter the name and street address, city/town, state, and ZIP code of the permittee. Also provide an email address (if available) and/or a phone number.

PERMIT OR EPA ID NUMBER: Enter the well identification number or permit number assigned to the well by the EPA or the permitting authority.

API NUMBER: Enter the number assigned by the local jurisdiction (usually a State Oil and Gas Agency) using the American Petroleum Institute standard numbering system.

FULL WELL NAME: Enter the full name of the well or project.

Enter the **STATE** and **COUNTY** where the well is located. For States that do not have counties, use the name of that State's equivalent jurisdiction at a more local level.

WELL LOCATION: Fill in the complete township, range, and section to the nearest quarter-quarter section. A township is north or south of the baseline, and a range is east or west of the principal meridian (e.g., T12N, R34W). Also include the distance, in feet, from the nearest north or south line and nearest east or west line of the quarter-section. Also, enter the **latitude** and **longitude** of the well in decimal degrees, to five or six places if possible; be sure to include a negative sign for the longitude of a well in the Western Hemisphere and a negative sign for the latitude of a well in the Southern Hemisphere.

Enter the **WELL CLASS,** i.e., the class of injection well as defined in 40 CFR 144.6.

TIMING OF THE ACTION: Check ***Notice prior to work*** if the activity has not yet occurred (i.e., is planned). Check ***Report after work*** if the activity described has already occurred. As appropriate, include the date the activity is expected to start or the date the activity was completed. (Note this may not be available, e.g., for a plugging plan submitted with a permit application.)

TYPE OF ACTION: Check the appropriate box to describe the kind of activity being reported. Check ***Well Rework*** for work that was/will be performed on the well after it has already been in operation as an injection well. Check ***Plugging and Abandonment*** to report on plans for or descriptions of final closure/plugging after use as an injection well. Check ***Conversion to a Non-Injection Well*** if the well is to be converted to something other than an injection well.

Provide a **NARRATIVE DESCRIPTION** of the work planned to be performed, or that was performed. The narrative should include a description of the main procedures planned or that occurred during the work activity. A service company report, daily report, or similar document may be attached if it includes all the requested information and is clear and legible.

For well reworks, include the following information: The reason for the well rework; depths of activity; type of activity; changes to injection well configuration, well casing, or cement behind casing; any plug added to the well and its depth; any newly drilled interval and its depth; method(s) to demonstrate that the well has mechanical integrity (as applicable); and any deviations from the approved rework plan (as applicable).

For a well plugging plan, include the following information: Reason for the well plugging; number of plugs placed, and their depths; materials used as plugs (e.g., cast iron bridge plug, cement, cement retainer); method to set plugs; and wait-on-cement times, if any. Also provide one or more cost estimates from an independent firm in the business of plugging and abandoning wells to plug the well as described in the plan.

For well plugging affidavit, include the following information: Reason for the well plugging; number of plugs placed, and their depths; materials used as plugs (e.g., cast iron bridge plug, cement, cement retainer); method to set plugs; wait-on-cement times, if any; and any deviations from the approved plugging plan (if applicable).

For conversion to a non-injection well, include the following information: Depths of activity; type of activity; changes to injection well configuration, well casing, or cement behind casing; any plug added to the well and its depth; any newly drilled interval and its depth; depths of new perforations; and method(s) to demonstrate that the well has mechanical integrity (as applicable).

For all of the above activities, include a well sketch depicting the work, results of well tests/logging performed, service company tickets, and any other available information demonstrating how the work was/is to be performed. Also, specify whether depths are below ground surface, relative to Kelly bushing, etc.

CERTIFICATION: This form must be signed and dated by either: a responsible corporate officer for a corporation, by a general partner for a partnership, by the proprietor of a sole proprietorship, or by a principal executive or ranking elected official for a public agency.

PAPERWORK REDUCTION ACT NOTICE: The public reporting and recordkeeping burden for this collection of information is estimated to average between 6.0 and 7.9 hours per response, depending on the injection well class. Burden means the total time, effort, or financial resource expended by persons to generate, maintain, retain, or disclose or provide information to or for a Federal Agency. This includes the time needed to review instructions; develop, acquire, install, and utilize technology and systems for the purposes of collecting, validating, and verifying information, processing and maintaining information, and disclosing and providing information; adjust the existing ways to comply with any previously applicable instructions and requirements; train personnel to be able to respond to the collection of information; search data sources; complete and review the collection of information; and, transmit or otherwise disclose the information. An agency may not conduct or sponsor, and a person is not required to respond to, a collection of information unless it displays a currently valid OMB control number. Send comments on the Agency's need for this information, the accuracy of the provided burden estimates, and any suggested methods for minimizing respondent burden, including the use of automated collection techniques to Director, Collection Strategies Division, U.S. Environmental Protection Agency (2822), 1200 Pennsylvania Ave., NW., Washington, D.C. 20460. Include the OMB control number in any correspondence. Do not send the completed forms to this address.

PROPOSED DESIGN
OBSERVATION/PERIMETER WELL
M21-UBF

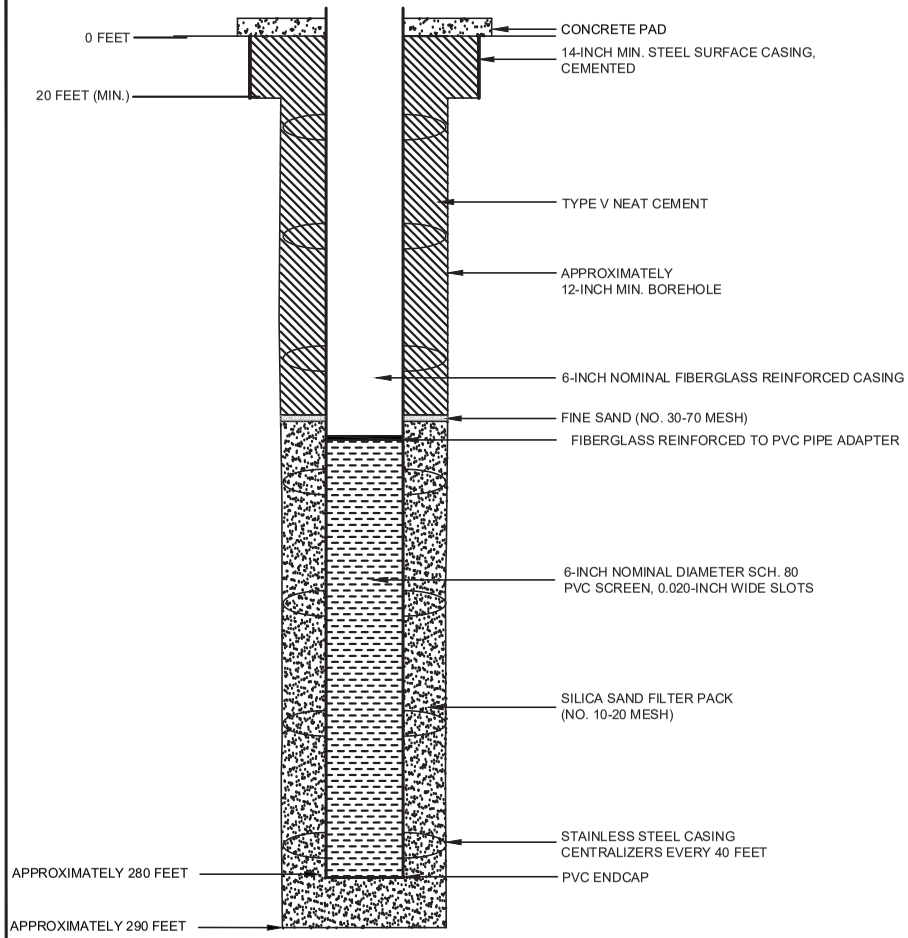

PROPOSED PLUGGING AND
ABANDONMENT OBSERVATION/
PERIMETER WELL M21-UBF

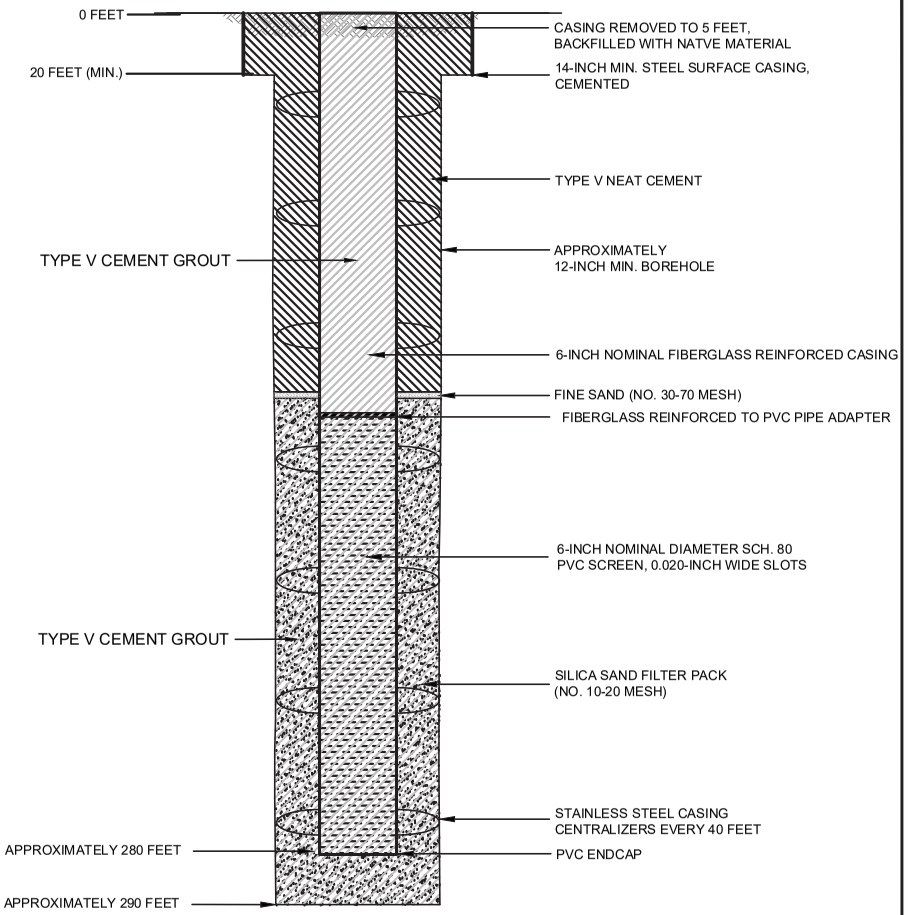

NOTES

1. WELL DESIGN DETAILS ARE BASED ON CORE HOLE AND WELL LOG RECORDS.

HALEY ALDRICH

FLORENCE COPPER, INC.
FLORENCE, ARIZONA

ABANDONMENT SCHEMATIC
OBSERVATION/PERIMETER
WELL M21-UBF

SEPTEMBER 2019
SCALE: AS SHOWN

FIGURE 1

OMB No. 2040-0042 Approval Expires 4/30/2022

United States Environmental Protection Agency

WELL REWORK RECORD, PLUGGING AND ABANDONMENT PLAN, OR PLUGGING AND ABANDONMENT AFFIDAVIT

Name and Address, Phone Number and/or Email of Permittee

Florence Copper Project
1575 W Hunt Hwy,
Florence, AZ 85132

Permit or EPA ID Number	API Number	Full Well Name
R9UIC-AZ3-FY11-1		M22-O

State	County
Arizona	Pinal

Locate well in two directions from nearest lines of quarter section and drilling unit

Latitude 33.05119674

Longitude -111.4370325

Surface Location

NW **1/4 of** SW **1/4 of Section** 28 **Township** 4S **Range** 9E

_____ **ft. from (N/S)** _____ **Line of quarter section**

_____ **ft. from (E/W)** _____ **Line of quarter section.**

Well Class	Timing of Action (pick one)	Type of Action (pick one)
☐ Class I ☐ Class II ☑ Class III ☐ Class V	☑ Notice Prior to Work Date Expected to Commence March 2021 ☐ Report After Work Date Work Ended	☐ Well Rework ☑ Plugging and Abandonment ☐ Conversion to a Non-Injection Well

Provide a narrative description of the work planned to be performed, or that was performed. Use additional pages as necessary. See instructions.

A workover rig capable of performing the required abandonment operations at the required depths will be moved in and set up over the well. The well casing will be inspected to determine the depth to which the well remains open and if any obstructions are present in the casing; the presence and condition of any existing surface casing will also be documented. If necessary, the well casing will be cleaned out to the bottom of the deepest screen or perforation to enable placement of cement seals.

If surface casing is present, an attempt will be made to remove it. If removal of the surface casing is not feasible, it will be left in the hole and perforated as needed to allow an annular seal to be placed to a depth of at least 25 feet bgs. In areas of agricultural use, the surface casing will be cut at least 5 feet bgs and removed.

If the surface casing cannot be removed, it will be perforated from at least 20 feet below the bedrock-LBFU contact to at least 20 feet above the contact; from at least 20 feet below the base of the MFGU to at least 20 feet above the top of the MFGU; and from at least 25 feet bgs to 5 feet bgs.

A tremie pipe will be used to place Type V cement in the open well from the bottom of the well casing to the top of the well casing. Cement retainers, as described above, will be used to force cement grout into the annulus and behind perforated screen intervals, as necessary.

If the well casing has been obstructed, as much cement as possible will be placed from 100 feet below the LBFU-bedrock contact to the top of the casing.

The volume of Type V cement will be recorded and will not be less than the estimated volume of material required to fill each interval. All cement grout will consist of Type V cement, or equivalent approved in accordance with the UIC Permit.

Certification

I certify under the penalty of law that I have personally examined and am familiar with the information submitted in this document and all attachments and that, based on my inquiry of those individuals immediately responsible for obtaining the information, I believe that the information is true, accurate, and complete. I am aware that there are significant penalties for submitting false information, including the possibliity of fine and imprisonment. (Ref. 40 CFR § 144.32)

Name and Official Title *(Please type or print)*	Signature	Date Signed
Dan Johnson, VP - General Manager		10/3/2019

INSTRUCTIONS FOR FORM 7520-19

This form replaces forms 7520-12 and 7520-14. Use this form only when work is planned or has occurred that affects the well's construction or operation as an injection well, including work on the casing, tubing or packer (or for shallow Class V wells, the subsurface fluid emplacement network). Use one form per injection well. While reports or other information developed by contractors or service companies may be attached, this form must be signed by a responsible entity as described at 40 CFR 144.32. Note: operators closing Class V wells should use Form 7520-17.

NAME, ADDRESS, PHONE AND/OR EMAIL OF PERMITTEE: Enter the name and street address, city/town, state, and ZIP code of the permittee. Also provide an email address (if available) and/or a phone number.

PERMIT OR EPA ID NUMBER: Enter the well identification number or permit number assigned to the well by the EPA or the permitting authority.

API NUMBER: Enter the number assigned by the local jurisdiction (usually a State Oil and Gas Agency) using the American Petroleum Institute standard numbering system.

FULL WELL NAME: Enter the full name of the well or project.

Enter the **STATE** and **COUNTY** where the well is located. For States that do not have counties, use the name of that State's equivalent jurisdiction at a more local level.

WELL LOCATION: Fill in the complete township, range, and section to the nearest quarter-quarter section. A township is north or south of the baseline, and a range is east or west of the principal meridian (e.g., T12N, R34W). Also include the distance, in feet, from the nearest north or south line and nearest east or west line of the quarter-section. Also, enter the **latitude** and **longitude** of the well in decimal degrees, to five or six places if possible; be sure to include a negative sign for the longitude of a well in the Western Hemisphere and a negative sign for the latitude of a well in the Southern Hemisphere.

Enter the **WELL CLASS,** i.e., the class of injection well as defined in 40 CFR 144.6.

TIMING OF THE ACTION: Check ***Notice prior to work*** if the activity has not yet occurred (i.e., is planned). Check ***Report after work*** if the activity described has already occurred. As appropriate, include the date the activity is expected to start or the date the activity was completed. (Note this may not be available, e.g., for a plugging plan submitted with a permit application.)

TYPE OF ACTION: Check the appropriate box to describe the kind of activity being reported. Check ***Well Rework*** for work that was/will be performed on the well after it has already been in operation as an injection well. Check ***Plugging and Abandonment*** to report on plans for or descriptions of final closure/plugging after use as an injection well. Check ***Conversion to a Non-Injection Well*** if the well is to be converted to something other than an injection well.

Provide a **NARRATIVE DESCRIPTION** of the work planned to be performed, or that was performed. The narrative should include a description of the main procedures planned or that occurred during the work activity. A service company report, daily report, or similar document may be attached if it includes all the requested information and is clear and legible.

For well reworks, include the following information: The reason for the well rework; depths of activity; type of activity; changes to injection well configuration, well casing, or cement behind casing; any plug added to the well and its depth; any newly drilled interval and its depth; method(s) to demonstrate that the well has mechanical integrity (as applicable); and any deviations from the approved rework plan (as applicable).

For a well plugging plan, include the following information: Reason for the well plugging; number of plugs placed, and their depths; materials used as plugs (e.g., cast iron bridge plug, cement, cement retainer); method to set plugs; and wait-on-cement times, if any. Also provide one or more cost estimates from an independent firm in the business of plugging and abandoning wells to plug the well as described in the plan.

For well plugging affidavit, include the following information: Reason for the well plugging; number of plugs placed, and their depths; materials used as plugs (e.g., cast iron bridge plug, cement, cement retainer); method to set plugs; wait-on-cement times, if any; and any deviations from the approved plugging plan (if applicable).

For conversion to a non-injection well, include the following information: Depths of activity; type of activity; changes to injection well configuration, well casing, or cement behind casing; any plug added to the well and its depth; any newly drilled interval and its depth; depths of new perforations; and method(s) to demonstrate that the well has mechanical integrity (as applicable).

For all of the above activities, include a well sketch depicting the work, results of well tests/logging performed, service company tickets, and any other available information demonstrating how the work was/is to be performed. Also, specify whether depths are below ground surface, relative to Kelly bushing, etc.

CERTIFICATION: This form must be signed and dated by either: a responsible corporate officer for a corporation, by a general partner for a partnership, by the proprietor of a sole proprietorship, or by a principal executive or ranking elected official for a public agency.

PAPERWORK REDUCTION ACT NOTICE: The public reporting and recordkeeping burden for this collection of information is estimated to average between 6.0 and 7.9 hours per response, depending on the injection well class. Burden means the total time, effort, or financial resource expended by persons to generate, maintain, retain, or disclose or provide information to or for a Federal Agency. This includes the time needed to review instructions; develop, acquire, install, and utilize technology and systems for the purposes of collecting, validating, and verifying information, processing and maintaining information, and disclosing and providing information; adjust the existing ways to comply with any previously applicable instructions and requirements; train personnel to be able to respond to the collection of information; search data sources; complete and review the collection of information; and, transmit or otherwise disclose the information. An agency may not conduct or sponsor, and a person is not required to respond to, a collection of information unless it displays a currently valid OMB control number. Send comments on the Agency's need for this information, the accuracy of the provided burden estimates, and any suggested methods for minimizing respondent burden, including the use of automated collection techniques to Director, Collection Strategies Division, U.S. Environmental Protection Agency (2822), 1200 Pennsylvania Ave., NW., Washington, D.C. 20460. Include the OMB control number in any correspondence. Do not send the completed forms to this address.

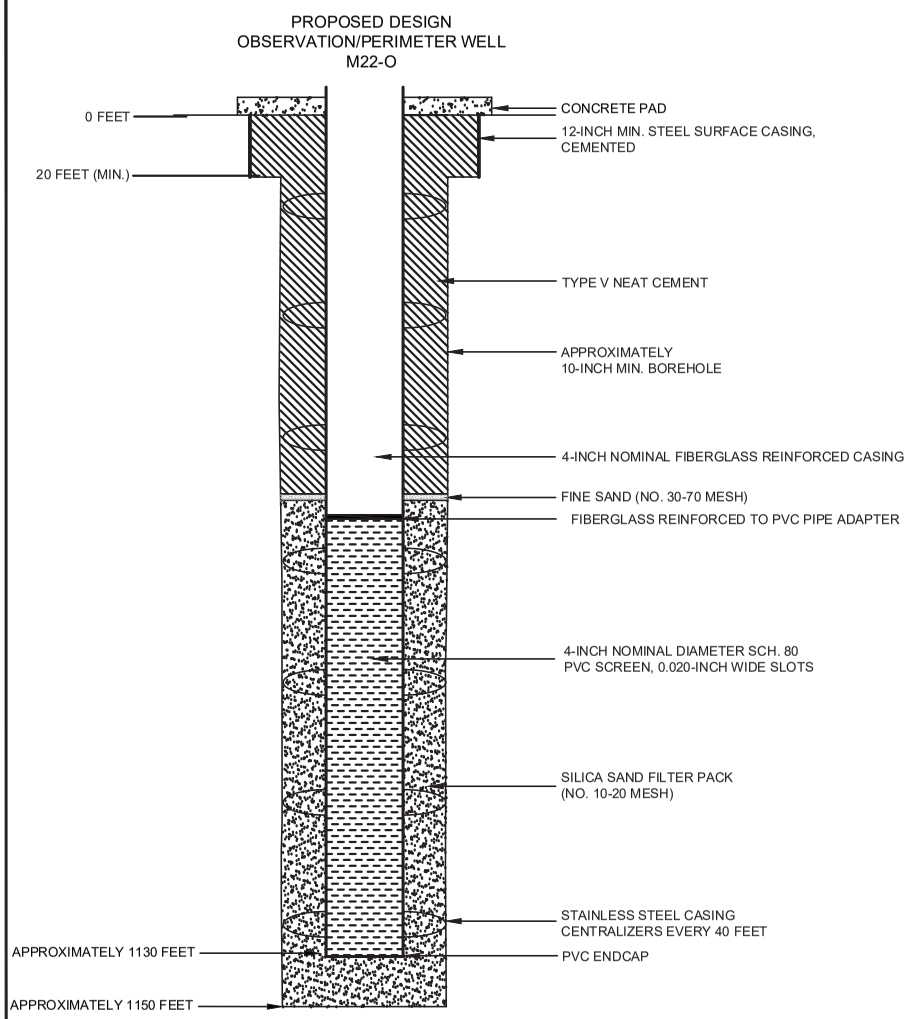

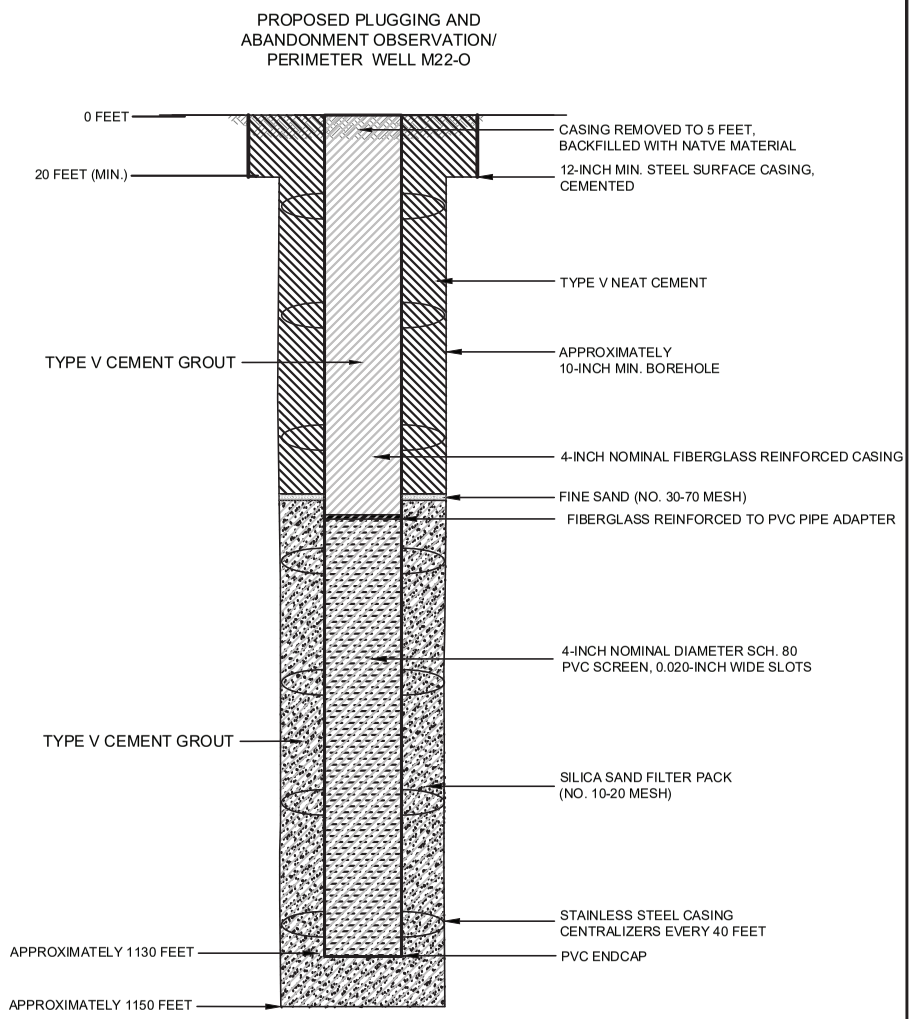

NOTES

1. WELL DESIGN DETAILS ARE BASED ON CORE HOLE AND WELL LOG RECORDS.

HALEY ALDRICH

FLORENCE COPPER, INC.
FLORENCE, ARIZONA

ABANDONMENT SCHEMATIC
OBSERVATION/PERIMETER
WELL M22-O

SEPTEMBER 2019
SCALE: AS SHOWN

FIGURE 1

OMB No. 2040-0042 Approval Expires 4/30/2022

United States Environmental Protection Agency

WELL REWORK RECORD, PLUGGING AND ABANDONMENT PLAN, OR PLUGGING AND ABANDONMENT AFFIDAVIT

Name and Address, Phone Number and/or Email of Permittee

Florence Copper Project
1575 W Hunt Hwy,
Florence, AZ 85132

Permit or EPA ID Number	API Number	Full Well Name
R9UIC-AZ3-FY11-1		M23-UBF

State	County
Arizona	Pinal

Locate well in two directions from nearest lines of quarter section and drilling unit

Surface Location

NW 1/4 of SW 1/4 of Section 28 Township 4S Range 9E

Latitude 33.05119204

Longitude -111.4372384

ft. from (N/S) Line of quarter section

ft. from (E/W) Line of quarter section.

Well Class	Timing of Action (pick one)	Type of Action (pick one)
☐ Class I ☐ Class II ☑ Class III ☐ Class V	☑ Notice Prior to Work Date Expected to Commence March 2021 ☐ Report After Work Date Work Ended	☐ Well Rework ☑ Plugging and Abandonment ☐ Conversion to a Non-Injection Well

Provide a narrative description of the work planned to be performed, or that was performed. Use additional pages as necessary. See instructions.

A workover rig capable of performing the required abandonment operations at the required depths will be moved in and set up over the well. The well casing will be inspected to determine the depth to which the well remains open and if any obstructions are present in the casing; the presence and condition of any existing surface casing will also be documented. If necessary, the well casing will be cleaned out to the bottom of the deepest screen or perforation to enable placement of cement seals.

If surface casing is present, an attempt will be made to remove it. If removal of the surface casing is not feasible, it will be left in the hole and perforated as needed to allow an annular seal to be placed to a depth of at least 25 feet bgs. In areas of agricultural use, the surface casing will be cut at least 5 feet bgs and removed.

If the surface casing cannot be removed, it will be perforated from at least 20 feet below the bedrock-LBFU contact to at least 20 feet above the contact; from at least 20 feet below the base of the MFGU to at least 20 feet above the top of the MFGU; and from at least 25 feet bgs to 5 feet bgs.

A tremie pipe will be used to place Type V cement in the open well from the bottom of the well casing to the top of the well casing. Cement retainers, as described above, will be used to force cement grout into the annulus and behind perforated screen intervals, as necessary.

If the well casing has been obstructed, as much cement as possible will be placed from 100 feet below the LBFU-bedrock contact to the top of the casing.

The volume of Type V cement will be recorded and will not be less than the estimated volume of material required to fill each interval. All cement grout will consist of Type V cement, or equivalent approved in accordance with the UIC Permit.

Certification

I certify under the penalty of law that I have personally examined and am familiar with the information submitted in this document and all attachments and that, based on my inquiry of those individuals immediately responsible for obtaining the information, I believe that the information is true, accurate, and complete. I am aware that there are significant penalties for submitting false information, including the possibliity of fine and imprisonment. (Ref. 40 CFR § 144.32)

Name and Official Title *(Please type or print)*	Signature	Date Signed
Dan Johnson, VP - General Manager		10/3/2019

INSTRUCTIONS FOR FORM 7520-19

This form replaces forms 7520-12 and 7520-14. Use this form only when work is planned or has occurred that affects the well's construction or operation as an injection well, including work on the casing, tubing or packer (or for shallow Class V wells, the subsurface fluid emplacement network). Use one form per injection well. While reports or other information developed by contractors or service companies may be attached, this form must be signed by a responsible entity as described at 40 CFR 144.32. Note: operators closing Class V wells should use Form 7520-17.

NAME, ADDRESS, PHONE AND/OR EMAIL OF PERMITTEE: Enter the name and street address, city/town, state, and ZIP code of the permittee. Also provide an email address (if available) and/or a phone number.

PERMIT OR EPA ID NUMBER: Enter the well identification number or permit number assigned to the well by the EPA or the permitting authority.

API NUMBER: Enter the number assigned by the local jurisdiction (usually a State Oil and Gas Agency) using the American Petroleum Institute standard numbering system.

FULL WELL NAME: Enter the full name of the well or project.

Enter the **STATE** and **COUNTY** where the well is located. For States that do not have counties, use the name of that State's equivalent jurisdiction at a more local level.

WELL LOCATION: Fill in the complete township, range, and section to the nearest quarter-quarter section. A township is north or south of the baseline, and a range is east or west of the principal meridian (e.g., T12N, R34W). Also include the distance, in feet, from the nearest north or south line and nearest east or west line of the quarter-section. Also, enter the **latitude** and **longitude** of the well in decimal degrees, to five or six places if possible; be sure to include a negative sign for the longitude of a well in the Western Hemisphere and a negative sign for the latitude of a well in the Southern Hemisphere.

Enter the **WELL CLASS,** i.e., the class of injection well as defined in 40 CFR 144.6.

TIMING OF THE ACTION: Check ***Notice prior to work*** if the activity has not yet occurred (i.e., is planned). Check ***Report after work*** if the activity described has already occurred. As appropriate, include the date the activity is expected to start or the date the activity was completed. (Note this may not be available, e.g., for a plugging plan submitted with a permit application.)

TYPE OF ACTION: Check the appropriate box to describe the kind of activity being reported. Check ***Well Rework*** for work that was/will be performed on the well after it has already been in operation as an injection well. Check ***Plugging and Abandonment*** to report on plans for or descriptions of final closure/plugging after use as an injection well. Check ***Conversion to a Non-Injection Well*** if the well is to be converted to something other than an injection well.

Provide a **NARRATIVE DESCRIPTION** of the work planned to be performed, or that was performed. The narrative should include a description of the main procedures planned or that occurred during the work activity. A service company report, daily report, or similar document may be attached if it includes all the requested information and is clear and legible.

For well reworks, include the following information: The reason for the well rework; depths of activity; type of activity; changes to injection well configuration, well casing, or cement behind casing; any plug added to the well and its depth; any newly drilled interval and its depth; method(s) to demonstrate that the well has mechanical integrity (as applicable); and any deviations from the approved rework plan (as applicable).

For a well plugging plan, include the following information: Reason for the well plugging; number of plugs placed, and their depths; materials used as plugs (e.g., cast iron bridge plug, cement, cement retainer); method to set plugs; and wait-on-cement times, if any. Also provide one or more cost estimates from an independent firm in the business of plugging and abandoning wells to plug the well as described in the plan.

For well plugging affidavit, include the following information: Reason for the well plugging; number of plugs placed, and their depths; materials used as plugs (e.g., cast iron bridge plug, cement, cement retainer); method to set plugs; wait-on-cement times, if any; and any deviations from the approved plugging plan (if applicable).

For conversion to a non-injection well, include the following information: Depths of activity; type of activity; changes to injection well configuration, well casing, or cement behind casing; any plug added to the well and its depth; any newly drilled interval and its depth; depths of new perforations; and method(s) to demonstrate that the well has mechanical integrity (as applicable).

For all of the above activities, include a well sketch depicting the work, results of well tests/logging performed, service company tickets, and any other available information demonstrating how the work was/is to be performed. Also, specify whether depths are below ground surface, relative to Kelly bushing, etc.

CERTIFICATION: This form must be signed and dated by either: a responsible corporate officer for a corporation, by a general partner for a partnership, by the proprietor of a sole proprietorship, or by a principal executive or ranking elected official for a public agency.

PAPERWORK REDUCTION ACT NOTICE: The public reporting and recordkeeping burden for this collection of information is estimated to average between 6.0 and 7.9 hours per response, depending on the injection well class. Burden means the total time, effort, or financial resource expended by persons to generate, maintain, retain, or disclose or provide information to or for a Federal Agency. This includes the time needed to review instructions; develop, acquire, install, and utilize technology and systems for the purposes of collecting, validating, and verifying information, processing and maintaining information, and disclosing and providing information; adjust the existing ways to comply with any previously applicable instructions and requirements; train personnel to be able to respond to the collection of information; search data sources; complete and review the collection of information; and, transmit or otherwise disclose the information. An agency may not conduct or sponsor, and a person is not required to respond to, a collection of information unless it displays a currently valid OMB control number. Send comments on the Agency's need for this information, the accuracy of the provided burden estimates, and any suggested methods for minimizing respondent burden, including the use of automated collection techniques to Director, Collection Strategies Division, U.S. Environmental Protection Agency (2822), 1200 Pennsylvania Ave., NW., Washington, D.C. 20460. Include the OMB control number in any correspondence. Do not send the completed forms to this address.

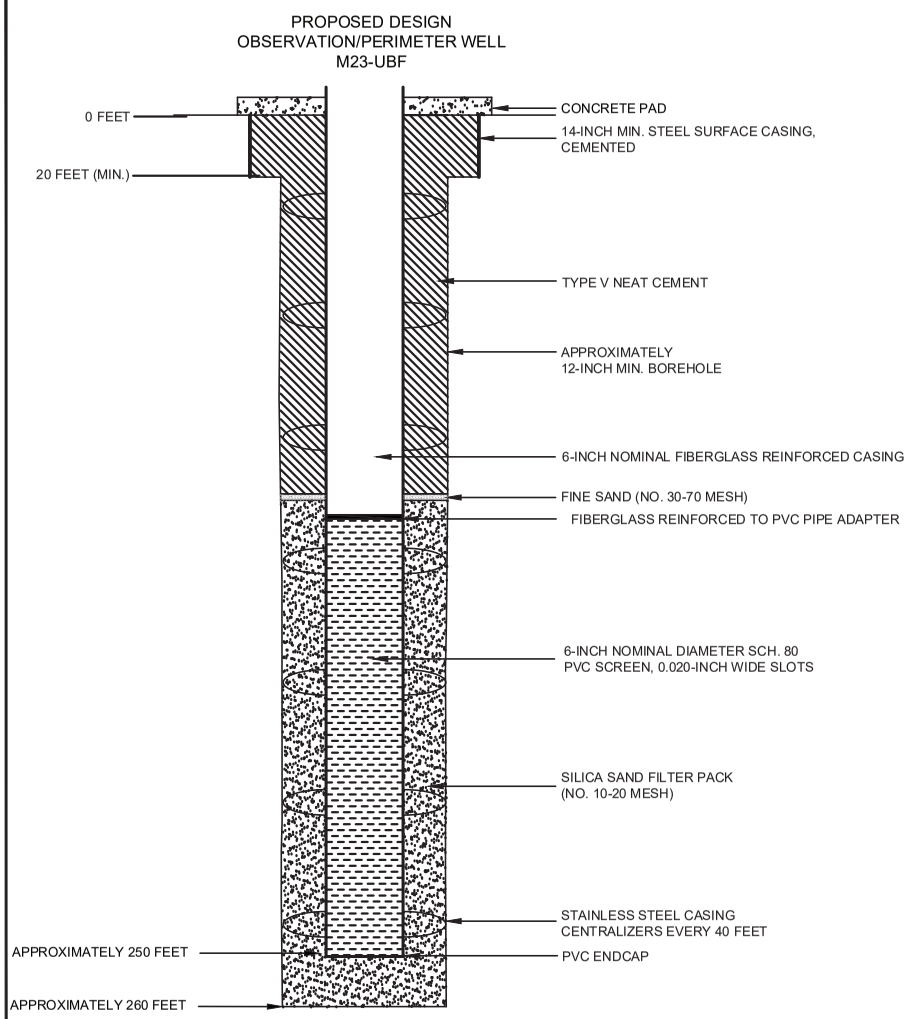

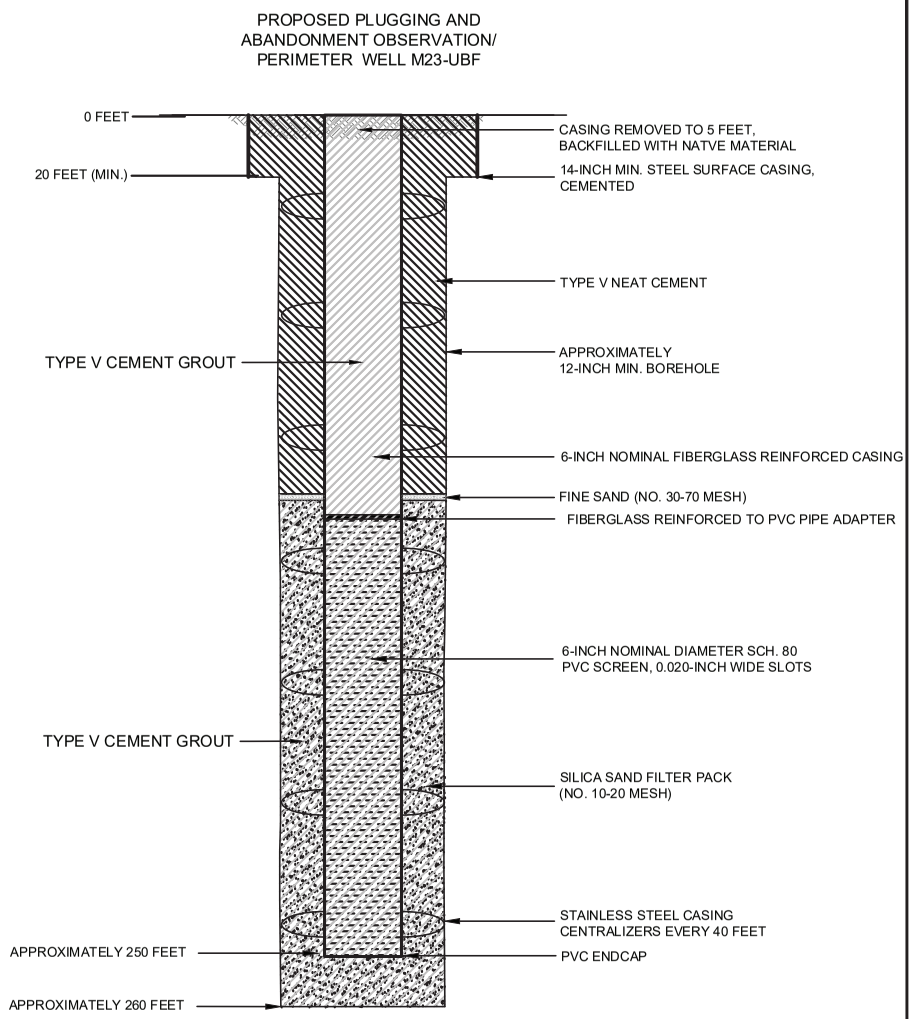

NOTES

1. WELL DESIGN DETAILS ARE BASED ON CORE HOLE AND WELL LOG RECORDS.

HALEY ALDRICH

FLORENCE COPPER, INC.
FLORENCE, ARIZONA

ABANDONMENT SCHEMATIC
OBSERVATION/PERIMETER
WELL M23-UBF

SEPTEMBER 2019
SCALE: AS SHOWN

FIGURE 1

OMB No. 2040-0042 Approval Expires 4/30/2022

United States Environmental Protection Agency

WELL REWORK RECORD, PLUGGING AND ABANDONMENT PLAN, OR PLUGGING AND ABANDONMENT AFFIDAVIT

Name and Address, Phone Number and/or Email of Permittee

Florence Copper Project
1575 W Hunt Hwy,
Florence, AZ 85132

Permit or EPA ID Number	API Number	Full Well Name
R9UIC-AZ3-FY11-1		M24-O

State	County
Arizona	Pinal

Locate well in two directions from nearest lines of quarter section and drilling unit

Surface Location

SW 1/4 of SW 1/4 of Section 28 Township 4S Range 9E

Latitude 33.04830472

Longitude -111.436835

ft. from (N/S) Line of quarter section

ft. from (E/W) Line of quarter section.

Well Class	Timing of Action (pick one)	Type of Action (pick one)
☐ Class I ☐ Class II ☑ Class III ☐ Class V	☑ Notice Prior to Work Date Expected to Commence March 2021 ☐ Report After Work Date Work Ended	☐ Well Rework ☑ Plugging and Abandonment ☐ Conversion to a Non-Injection Well

Provide a narrative description of the work planned to be performed, or that was performed. Use additional pages as necessary. See instructions.

A workover rig capable of performing the required abandonment operations at the required depths will be moved in and set up over the well. The well casing will be inspected to determine the depth to which the well remains open and if any obstructions are present in the casing; the presence and condition of any existing surface casing will also be documented. If necessary, the well casing will be cleaned out to the bottom of the deepest screen or perforation to enable placement of cement seals.

If surface casing is present, an attempt will be made to remove it. If removal of the surface casing is not feasible, it will be left in the hole and perforated as needed to allow an annular seal to be placed to a depth of at least 25 feet bgs. In areas of agricultural use, the surface casing will be cut at least 5 feet bgs and removed.

If the surface casing cannot be removed, it will be perforated from at least 20 feet below the bedrock-LBFU contact to at least 20 feet above the contact; from at least 20 feet below the base of the MFGU to at least 20 feet above the top of the MFGU; and from at least 25 feet bgs to 5 feet bgs.

A tremie pipe will be used to place Type V cement in the open well from the bottom of the well casing to the top of the well casing. Cement retainers, as described above, will be used to force cement grout into the annulus and behind perforated screen intervals, as necessary.

If the well casing has been obstructed, as much cement as possible will be placed from 100 feet below the LBFU-bedrock contact to the top of the casing.

The volume of Type V cement will be recorded and will not be less than the estimated volume of material required to fill each interval. All cement grout will consist of Type V cement, or equivalent approved in accordance with the UIC Permit.

Certification

I certify under the penalty of law that I have personally examined and am familiar with the information submitted in this document and all attachments and that, based on my inquiry of those individuals immediately responsible for obtaining the information, I believe that the information is true, accurate, and complete. I am aware that there are significant penalties for submitting false information, including the possibliity of fine and imprisonment. (Ref. 40 CFR § 144.32)

Name and Official Title *(Please type or print)*	Signature	Date Signed
Dan Johnson, VP - General Manager		10/3/2019

INSTRUCTIONS FOR FORM 7520-19

This form replaces forms 7520-12 and 7520-14. Use this form only when work is planned or has occurred that affects the well's construction or operation as an injection well, including work on the casing, tubing or packer (or for shallow Class V wells, the subsurface fluid emplacement network). Use one form per injection well. While reports or other information developed by contractors or service companies may be attached, this form must be signed by a responsible entity as described at 40 CFR 144.32. Note: operators closing Class V wells should use Form 7520-17.

NAME, ADDRESS, PHONE AND/OR EMAIL OF PERMITTEE: Enter the name and street address, city/town, state, and ZIP code of the permittee. Also provide an email address (if available) and/or a phone number.

PERMIT OR EPA ID NUMBER: Enter the well identification number or permit number assigned to the well by the EPA or the permitting authority.

API NUMBER: Enter the number assigned by the local jurisdiction (usually a State Oil and Gas Agency) using the American Petroleum Institute standard numbering system.

FULL WELL NAME: Enter the full name of the well or project.

Enter the **STATE** and **COUNTY** where the well is located. For States that do not have counties, use the name of that State's equivalent jurisdiction at a more local level.

WELL LOCATION: Fill in the complete township, range, and section to the nearest quarter-quarter section. A township is north or south of the baseline, and a range is east or west of the principal meridian (e.g., T12N, R34W). Also include the distance, in feet, from the nearest north or south line and nearest east or west line of the quarter-section. Also, enter the **latitude** and **longitude** of the well in decimal degrees, to five or six places if possible; be sure to include a negative sign for the longitude of a well in the Western Hemisphere and a negative sign for the latitude of a well in the Southern Hemisphere.

Enter the **WELL CLASS,** i.e., the class of injection well as defined in 40 CFR 144.6.

TIMING OF THE ACTION: Check ***Notice prior to work*** if the activity has not yet occurred (i.e., is planned). Check ***Report after work*** if the activity described has already occurred. As appropriate, include the date the activity is expected to start or the date the activity was completed. (Note this may not be available, e.g., for a plugging plan submitted with a permit application.)

TYPE OF ACTION: Check the appropriate box to describe the kind of activity being reported. Check ***Well Rework*** for work that was/will be performed on the well after it has already been in operation as an injection well. Check ***Plugging and Abandonment*** to report on plans for or descriptions of final closure/plugging after use as an injection well. Check ***Conversion to a Non-Injection Well*** if the well is to be converted to something other than an injection well.

Provide a **NARRATIVE DESCRIPTION** of the work planned to be performed, or that was performed. The narrative should include a description of the main procedures planned or that occurred during the work activity. A service company report, daily report, or similar document may be attached if it includes all the requested information and is clear and legible.

For well reworks, include the following information: The reason for the well rework; depths of activity; type of activity; changes to injection well configuration, well casing, or cement behind casing; any plug added to the well and its depth; any newly drilled interval and its depth; method(s) to demonstrate that the well has mechanical integrity (as applicable); and any deviations from the approved rework plan (as applicable).

For a well plugging plan, include the following information: Reason for the well plugging; number of plugs placed, and their depths; materials used as plugs (e.g., cast iron bridge plug, cement, cement retainer); method to set plugs; and wait-on-cement times, if any. Also provide one or more cost estimates from an independent firm in the business of plugging and abandoning wells to plug the well as described in the plan.

For well plugging affidavit, include the following information: Reason for the well plugging; number of plugs placed, and their depths; materials used as plugs (e.g., cast iron bridge plug, cement, cement retainer); method to set plugs; wait-on-cement times, if any; and any deviations from the approved plugging plan (if applicable).

For conversion to a non-injection well, include the following information: Depths of activity; type of activity; changes to injection well configuration, well casing, or cement behind casing; any plug added to the well and its depth; any newly drilled interval and its depth; depths of new perforations; and method(s) to demonstrate that the well has mechanical integrity (as applicable).

For all of the above activities, include a well sketch depicting the work, results of well tests/logging performed, service company tickets, and any other available information demonstrating how the work was/is to be performed. Also, specify whether depths are below ground surface, relative to Kelly bushing, etc.

CERTIFICATION: This form must be signed and dated by either: a responsible corporate officer for a corporation, by a general partner for a partnership, by the proprietor of a sole proprietorship, or by a principal executive or ranking elected official for a public agency.

PAPERWORK REDUCTION ACT NOTICE: The public reporting and recordkeeping burden for this collection of information is estimated to average between 6.0 and 7.9 hours per response, depending on the injection well class. Burden means the total time, effort, or financial resource expended by persons to generate, maintain, retain, or disclose or provide information to or for a Federal Agency. This includes the time needed to review instructions; develop, acquire, install, and utilize technology and systems for the purposes of collecting, validating, and verifying information, processing and maintaining information, and disclosing and providing information; adjust the existing ways to comply with any previously applicable instructions and requirements; train personnel to be able to respond to the collection of information; search data sources; complete and review the collection of information; and, transmit or otherwise disclose the information. An agency may not conduct or sponsor, and a person is not required to respond to, a collection of information unless it displays a currently valid OMB control number. Send comments on the Agency's need for this information, the accuracy of the provided burden estimates, and any suggested methods for minimizing respondent burden, including the use of automated collection techniques to Director, Collection Strategies Division, U.S. Environmental Protection Agency (2822), 1200 Pennsylvania Ave., NW., Washington, D.C. 20460. Include the OMB control number in any correspondence. Do not send the completed forms to this address.

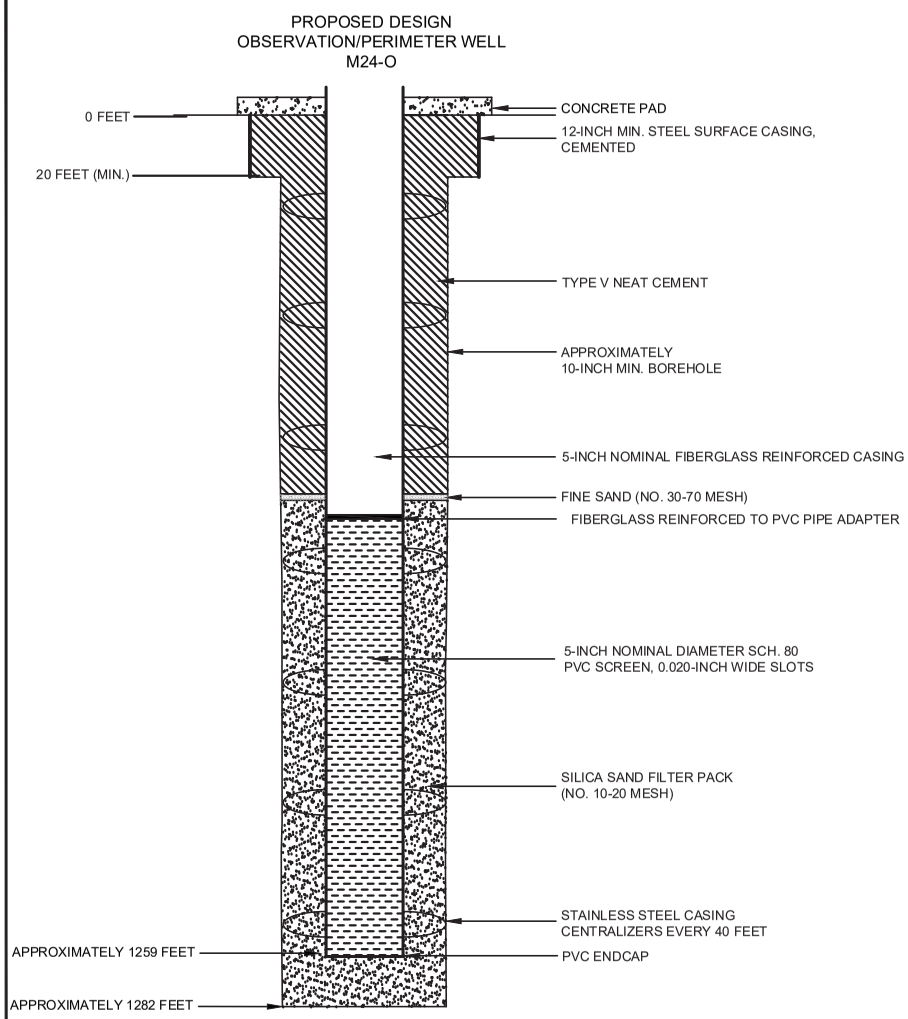

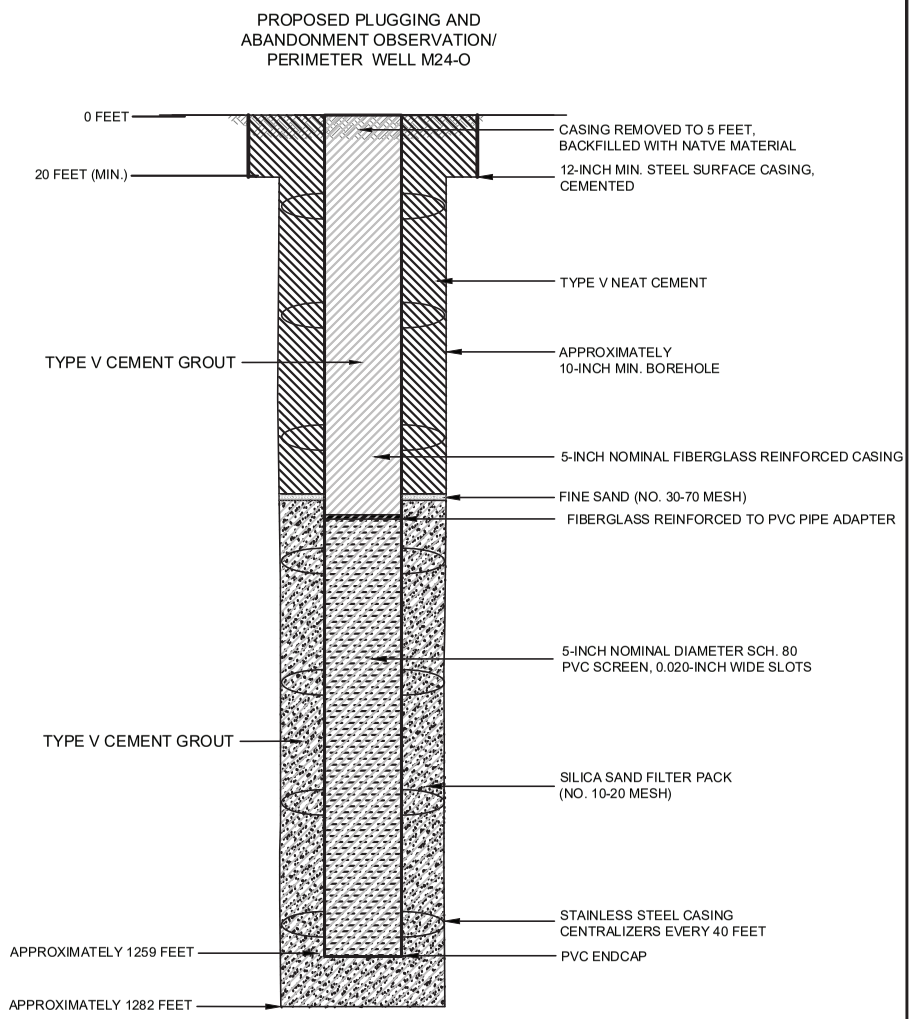

NOTES

1. WELL DESIGN DETAILS ARE BASED ON CORE HOLE AND WELL LOG RECORDS.

HALEY ALDRICH

FLORENCE COPPER, INC.
FLORENCE, ARIZONA

ABANDONMENT SCHEMATIC
OBSERVATION/PERIMETER
WELL M24-O

SEPTEMBER 2019
SCALE: AS SHOWN

FIGURE 1

OMB No. 2040-0042 Approval Expires 4/30/2022

United States Environmental Protection Agency

WELL REWORK RECORD, PLUGGING AND ABANDONMENT PLAN, OR PLUGGING AND ABANDONMENT AFFIDAVIT

Name and Address, Phone Number and/or Email of Permittee

Florence Copper Project
1575 W Hunt Hwy,
Florence, AZ 85132

Permit or EPA ID Number	API Number	Full Well Name
R9UIC-AZ3-FY11-1		M25-UBF

State	County
Arizona	Pinal

Locate well in two directions from nearest lines of quarter section and drilling unit

Latitude 33.04843896

Surface Location

SW **1/4 of** SW **1/4 of Section** 28 **Township** 4S **Range** 9E

Longitude -111.4368624

_____ **ft. from (N/S)** _____ **Line of quarter section**

_____ **ft. from (E/W)** _____ **Line of quarter section.**

Well Class	Timing of Action (pick one)	Type of Action (pick one)
☐ Class I ☐ Class II ☑ Class III ☐ Class V	☑ Notice Prior to Work Date Expected to Commence March 2021 ☐ Report After Work Date Work Ended	☐ Well Rework ☑ Plugging and Abandonment ☐ Conversion to a Non-Injection Well

Provide a narrative description of the work planned to be performed, or that was performed. Use additional pages as necessary. See instructions.

A workover rig capable of performing the required abandonment operations at the required depths will be moved in and set up over the well. The well casing will be inspected to determine the depth to which the well remains open and if any obstructions are present in the casing; the presence and condition of any existing surface casing will also be documented. If necessary, the well casing will be cleaned out to the bottom of the deepest screen or perforation to enable placement of cement seals.

If surface casing is present, an attempt will be made to remove it. If removal of the surface casing is not feasible, it will be left in the hole and perforated as needed to allow an annular seal to be placed to a depth of at least 25 feet bgs. In areas of agricultural use, the surface casing will be cut at least 5 feet bgs and removed.

If the surface casing cannot be removed, it will be perforated from at least 20 feet below the bedrock-LBFU contact to at least 20 feet above the contact; from at least 20 feet below the base of the MFGU to at least 20 feet above the top of the MFGU; and from at least 25 feet bgs to 5 feet bgs.

A tremie pipe will be used to place Type V cement in the open well from the bottom of the well casing to the top of the well casing. Cement retainers, as described above, will be used to force cement grout into the annulus and behind perforated screen intervals, as necessary.

If the well casing has been obstructed, as much cement as possible will be placed from 100 feet below the LBFU-bedrock contact to the top of the casing.

The volume of Type V cement will be recorded and will not be less than the estimated volume of material required to fill each interval. All cement grout will consist of Type V cement, or equivalent approved in accordance with the UIC Permit.

Certification

I certify under the penalty of law that I have personally examined and am familiar with the information submitted in this document and all attachments and that, based on my inquiry of those individuals immediately responsible for obtaining the information, I believe that the information is true, accurate, and complete. I am aware that there are significant penalties for submitting false information, including the possibliity of fine and imprisonment. (Ref. 40 CFR § 144.32)

Name and Official Title *(Please type or print)*	Signature	Date Signed
Dan Johnson, VP - General Manager		10/3/2019

INSTRUCTIONS FOR FORM 7520-19

This form replaces forms 7520-12 and 7520-14. Use this form only when work is planned or has occurred that affects the well's construction or operation as an injection well, including work on the casing, tubing or packer (or for shallow Class V wells, the subsurface fluid emplacement network). Use one form per injection well. While reports or other information developed by contractors or service companies may be attached, this form must be signed by a responsible entity as described at 40 CFR 144.32. Note: operators closing Class V wells should use Form 7520-17.

NAME, ADDRESS, PHONE AND/OR EMAIL OF PERMITTEE: Enter the name and street address, city/town, state, and ZIP code of the permittee. Also provide an email address (if available) and/or a phone number.

PERMIT OR EPA ID NUMBER: Enter the well identification number or permit number assigned to the well by the EPA or the permitting authority.

API NUMBER: Enter the number assigned by the local jurisdiction (usually a State Oil and Gas Agency) using the American Petroleum Institute standard numbering system.

FULL WELL NAME: Enter the full name of the well or project.

Enter the **STATE** and **COUNTY** where the well is located. For States that do not have counties, use the name of that State's equivalent jurisdiction at a more local level.

WELL LOCATION: Fill in the complete township, range, and section to the nearest quarter-quarter section. A township is north or south of the baseline, and a range is east or west of the principal meridian (e.g., T12N, R34W). Also include the distance, in feet, from the nearest north or south line and nearest east or west line of the quarter-section. Also, enter the **latitude** and **longitude** of the well in decimal degrees, to five or six places if possible; be sure to include a negative sign for the longitude of a well in the Western Hemisphere and a negative sign for the latitude of a well in the Southern Hemisphere.

Enter the **WELL CLASS,** i.e., the class of injection well as defined in 40 CFR 144.6.

TIMING OF THE ACTION: Check ***Notice prior to work*** if the activity has not yet occurred (i.e., is planned). Check ***Report after work*** if the activity described has already occurred. As appropriate, include the date the activity is expected to start or the date the activity was completed. (Note this may not be available, e.g., for a plugging plan submitted with a permit application.)

TYPE OF ACTION: Check the appropriate box to describe the kind of activity being reported. Check ***Well Rework*** for work that was/will be performed on the well after it has already been in operation as an injection well. Check ***Plugging and Abandonment*** to report on plans for or descriptions of final closure/plugging after use as an injection well. Check ***Conversion to a Non-Injection Well*** if the well is to be converted to something other than an injection well.

Provide a **NARRATIVE DESCRIPTION** of the work planned to be performed, or that was performed. The narrative should include a description of the main procedures planned or that occurred during the work activity. A service company report, daily report, or similar document may be attached if it includes all the requested information and is clear and legible.

For well reworks, include the following information: The reason for the well rework; depths of activity; type of activity; changes to injection well configuration, well casing, or cement behind casing; any plug added to the well and its depth; any newly drilled interval and its depth; method(s) to demonstrate that the well has mechanical integrity (as applicable); and any deviations from the approved rework plan (as applicable).

For a well plugging plan, include the following information: Reason for the well plugging; number of plugs placed, and their depths; materials used as plugs (e.g., cast iron bridge plug, cement, cement retainer); method to set plugs; and wait-on-cement times, if any. Also provide one or more cost estimates from an independent firm in the business of plugging and abandoning wells to plug the well as described in the plan.

For well plugging affidavit, include the following information: Reason for the well plugging; number of plugs placed, and their depths; materials used as plugs (e.g., cast iron bridge plug, cement, cement retainer); method to set plugs; wait-on-cement times, if any; and any deviations from the approved plugging plan (if applicable).

For conversion to a non-injection well, include the following information: Depths of activity; type of activity; changes to injection well configuration, well casing, or cement behind casing; any plug added to the well and its depth; any newly drilled interval and its depth; depths of new perforations; and method(s) to demonstrate that the well has mechanical integrity (as applicable).

For all of the above activities, include a well sketch depicting the work, results of well tests/logging performed, service company tickets, and any other available information demonstrating how the work was/is to be performed. Also, specify whether depths are below ground surface, relative to Kelly bushing, etc.

CERTIFICATION: This form must be signed and dated by either: a responsible corporate officer for a corporation, by a general partner for a partnership, by the proprietor of a sole proprietorship, or by a principal executive or ranking elected official for a public agency.

PAPERWORK REDUCTION ACT NOTICE: The public reporting and recordkeeping burden for this collection of information is estimated to average between 6.0 and 7.9 hours per response, depending on the injection well class. Burden means the total time, effort, or financial resource expended by persons to generate, maintain, retain, or disclose or provide information to or for a Federal Agency. This includes the time needed to review instructions; develop, acquire, install, and utilize technology and systems for the purposes of collecting, validating, and verifying information, processing and maintaining information, and disclosing and providing information; adjust the existing ways to comply with any previously applicable instructions and requirements; train personnel to be able to respond to the collection of information; search data sources; complete and review the collection of information; and, transmit or otherwise disclose the information. An agency may not conduct or sponsor, and a person is not required to respond to, a collection of information unless it displays a currently valid OMB control number. Send comments on the Agency's need for this information, the accuracy of the provided burden estimates, and any suggested methods for minimizing respondent burden, including the use of automated collection techniques to Director, Collection Strategies Division, U.S. Environmental Protection Agency (2822), 1200 Pennsylvania Ave., NW., Washington, D.C. 20460. Include the OMB control number in any correspondence. Do not send the completed forms to this address.

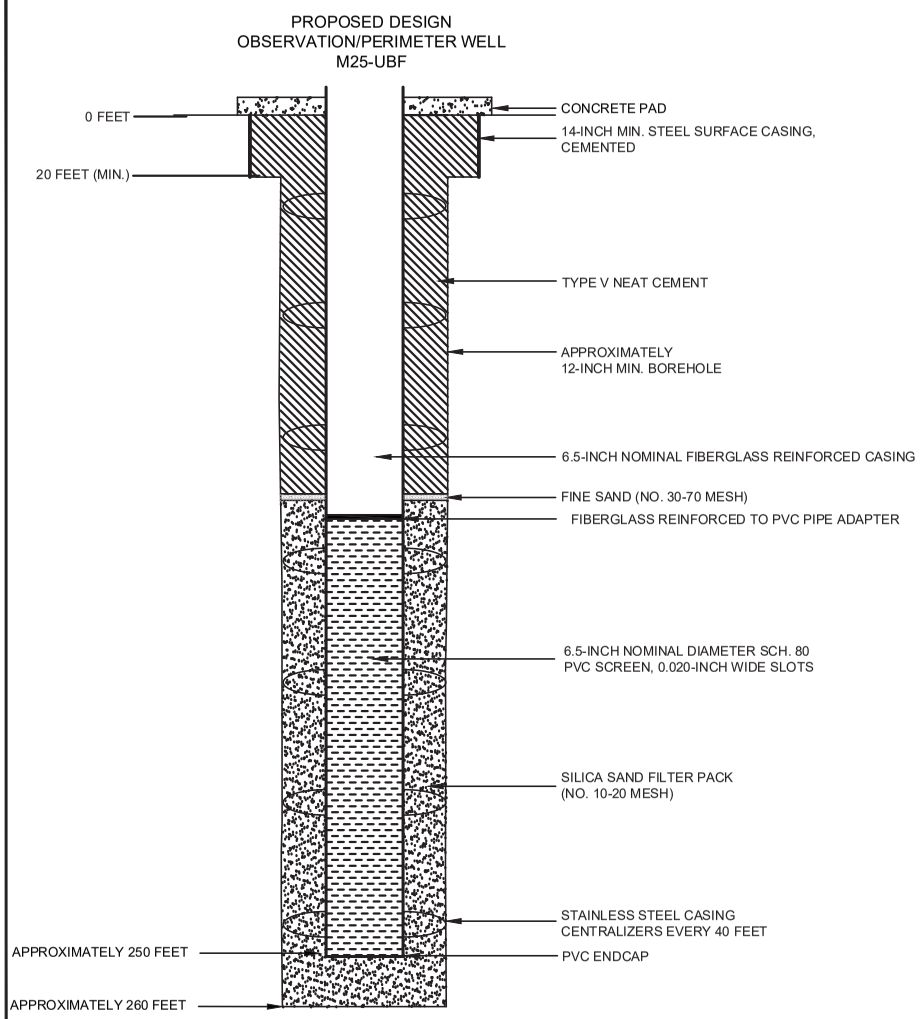

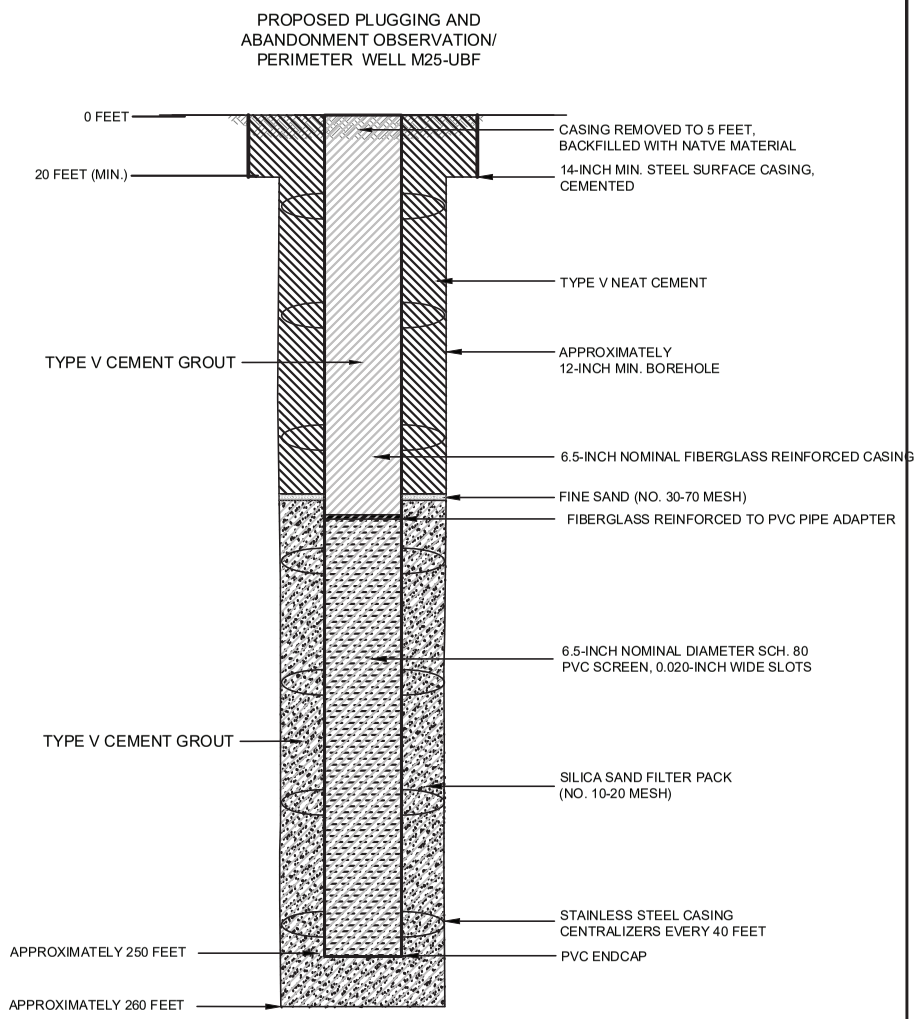

NOTES

1. WELL DESIGN DETAILS ARE BASED ON CORE HOLE AND WELL LOG RECORDS.

HALEY ALDRICH

FLORENCE COPPER, INC.
FLORENCE, ARIZONA

ABANDONMENT SCHEMATIC
OBSERVATION/PERIMETER
WELL M25-UBF

SEPTEMBER 2019
SCALE: AS SHOWN

FIGURE 1

OMB No. 2040-0042 Approval Expires 4/30/2022

United States Environmental Protection Agency

WELL REWORK RECORD, PLUGGING AND ABANDONMENT PLAN, OR PLUGGING AND ABANDONMENT AFFIDAVIT

Name and Address, Phone Number and/or Email of Permittee

Florence Copper Project
1575 W Hunt Hwy,
Florence, AZ 85132

Permit or EPA ID Number	API Number	Full Well Name
R9UIC-AZ3-FY11-1		M26-O

State	County
Arizona	Pinal

Locate well in two directions from nearest lines of quarter section and drilling unit

Latitude 33.05455636

Surface Location

SW **1/4 of** NW **1/4 of Section** 28 **Township** 4S **Range** 9E

Longitude -111.4342479

_____ **ft. from (N/S)** _____ **Line of quarter section**

_____ **ft. from (E/W)** _____ **Line of quarter section.**

Well Class	Timing of Action (pick one)	Type of Action (pick one)
☐ Class I ☐ Class II ☑ Class III ☐ Class V	☑ Notice Prior to Work Date Expected to Commence March 2021 ☐ Report After Work Date Work Ended	☐ Well Rework ☑ Plugging and Abandonment ☐ Conversion to a Non-Injection Well

Provide a narrative description of the work planned to be performed, or that was performed. Use additional pages as necessary. See instructions.

A workover rig capable of performing the required abandonment operations at the required depths will be moved in and set up over the well. The well casing will be inspected to determine the depth to which the well remains open and if any obstructions are present in the casing; the presence and condition of any existing surface casing will also be documented. If necessary, the well casing will be cleaned out to the bottom of the deepest screen or perforation to enable placement of cement seals.

If surface casing is present, an attempt will be made to remove it. If removal of the surface casing is not feasible, it will be left in the hole and perforated as needed to allow an annular seal to be placed to a depth of at least 25 feet bgs. In areas of agricultural use, the surface casing will be cut at least 5 feet bgs and removed.

If the surface casing cannot be removed, it will be perforated from at least 20 feet below the bedrock-LBFU contact to at least 20 feet above the contact; from at least 20 feet below the base of the MFGU to at least 20 feet above the top of the MFGU; and from at least 25 feet bgs to 5 feet bgs.

A tremie pipe will be used to place Type V cement in the open well from the bottom of the well casing to the top of the well casing. Cement retainers, as described above, will be used to force cement grout into the annulus and behind perforated screen intervals, as necessary.

If the well casing has been obstructed, as much cement as possible will be placed from 100 feet below the LBFU-bedrock contact to the top of the casing.

The volume of Type V cement will be recorded and will not be less than the estimated volume of material required to fill each interval. All cement grout will consist of Type V cement, or equivalent approved in accordance with the UIC Permit.

Certification

I certify under the penalty of law that I have personally examined and am familiar with the information submitted in this document and all attachments and that, based on my inquiry of those individuals immediately responsible for obtaining the information, I believe that the information is true, accurate, and complete. I am aware that there are significant penalties for submitting false information, including the possibliity of fine and imprisonment. (Ref. 40 CFR § 144.32)

Name and Official Title *(Please type or print)*	Signature	Date Signed
Dan Johnson, VP - General Manager		10/3/2019

INSTRUCTIONS FOR FORM 7520-19

This form replaces forms 7520-12 and 7520-14. Use this form only when work is planned or has occurred that affects the well's construction or operation as an injection well, including work on the casing, tubing or packer (or for shallow Class V wells, the subsurface fluid emplacement network). Use one form per injection well. While reports or other information developed by contractors or service companies may be attached, this form must be signed by a responsible entity as described at 40 CFR 144.32. Note: operators closing Class V wells should use Form 7520-17.

NAME, ADDRESS, PHONE AND/OR EMAIL OF PERMITTEE: Enter the name and street address, city/town, state, and ZIP code of the permittee. Also provide an email address (if available) and/or a phone number.

PERMIT OR EPA ID NUMBER: Enter the well identification number or permit number assigned to the well by the EPA or the permitting authority.

API NUMBER: Enter the number assigned by the local jurisdiction (usually a State Oil and Gas Agency) using the American Petroleum Institute standard numbering system.

FULL WELL NAME: Enter the full name of the well or project.

Enter the **STATE** and **COUNTY** where the well is located. For States that do not have counties, use the name of that State's equivalent jurisdiction at a more local level.

WELL LOCATION: Fill in the complete township, range, and section to the nearest quarter-quarter section. A township is north or south of the baseline, and a range is east or west of the principal meridian (e.g., T12N, R34W). Also include the distance, in feet, from the nearest north or south line and nearest east or west line of the quarter-section. Also, enter the **latitude** and **longitude** of the well in decimal degrees, to five or six places if possible; be sure to include a negative sign for the longitude of a well in the Western Hemisphere and a negative sign for the latitude of a well in the Southern Hemisphere.

Enter the **WELL CLASS,** i.e., the class of injection well as defined in 40 CFR 144.6.

TIMING OF THE ACTION: Check ***Notice prior to work*** if the activity has not yet occurred (i.e., is planned). Check ***Report after work*** if the activity described has already occurred. As appropriate, include the date the activity is expected to start or the date the activity was completed. (Note this may not be available, e.g., for a plugging plan submitted with a permit application.)

TYPE OF ACTION: Check the appropriate box to describe the kind of activity being reported. Check ***Well Rework*** for work that was/will be performed on the well after it has already been in operation as an injection well. Check ***Plugging and Abandonment*** to report on plans for or descriptions of final closure/plugging after use as an injection well. Check ***Conversion to a Non-Injection Well*** if the well is to be converted to something other than an injection well.

Provide a **NARRATIVE DESCRIPTION** of the work planned to be performed, or that was performed. The narrative should include a description of the main procedures planned or that occurred during the work activity. A service company report, daily report, or similar document may be attached if it includes all the requested information and is clear and legible.

For well reworks, include the following information: The reason for the well rework; depths of activity; type of activity; changes to injection well configuration, well casing, or cement behind casing; any plug added to the well and its depth; any newly drilled interval and its depth; method(s) to demonstrate that the well has mechanical integrity (as applicable); and any deviations from the approved rework plan (as applicable).

For a well plugging plan, include the following information: Reason for the well plugging; number of plugs placed, and their depths; materials used as plugs (e.g., cast iron bridge plug, cement, cement retainer); method to set plugs; and wait-on-cement times, if any. Also provide one or more cost estimates from an independent firm in the business of plugging and abandoning wells to plug the well as described in the plan.

For well plugging affidavit, include the following information: Reason for the well plugging; number of plugs placed, and their depths; materials used as plugs (e.g., cast iron bridge plug, cement, cement retainer); method to set plugs; wait-on-cement times, if any; and any deviations from the approved plugging plan (if applicable).

For conversion to a non-injection well, include the following information: Depths of activity; type of activity; changes to injection well configuration, well casing, or cement behind casing; any plug added to the well and its depth; any newly drilled interval and its depth; depths of new perforations; and method(s) to demonstrate that the well has mechanical integrity (as applicable).

For all of the above activities, include a well sketch depicting the work, results of well tests/logging performed, service company tickets, and any other available information demonstrating how the work was/is to be performed. Also, specify whether depths are below ground surface, relative to Kelly bushing, etc.

CERTIFICATION: This form must be signed and dated by either: a responsible corporate officer for a corporation, by a general partner for a partnership, by the proprietor of a sole proprietorship, or by a principal executive or ranking elected official for a public agency.

PAPERWORK REDUCTION ACT NOTICE: The public reporting and recordkeeping burden for this collection of information is estimated to average between 6.0 and 7.9 hours per response, depending on the injection well class. Burden means the total time, effort, or financial resource expended by persons to generate, maintain, retain, or disclose or provide information to or for a Federal Agency. This includes the time needed to review instructions; develop, acquire, install, and utilize technology and systems for the purposes of collecting, validating, and verifying information, processing and maintaining information, and disclosing and providing information; adjust the existing ways to comply with any previously applicable instructions and requirements; train personnel to be able to respond to the collection of information; search data sources; complete and review the collection of information; and, transmit or otherwise disclose the information. An agency may not conduct or sponsor, and a person is not required to respond to, a collection of information unless it displays a currently valid OMB control number. Send comments on the Agency's need for this information, the accuracy of the provided burden estimates, and any suggested methods for minimizing respondent burden, including the use of automated collection techniques to Director, Collection Strategies Division, U.S. Environmental Protection Agency (2822), 1200 Pennsylvania Ave., NW., Washington, D.C. 20460. Include the OMB control number in any correspondence. Do not send the completed forms to this address.

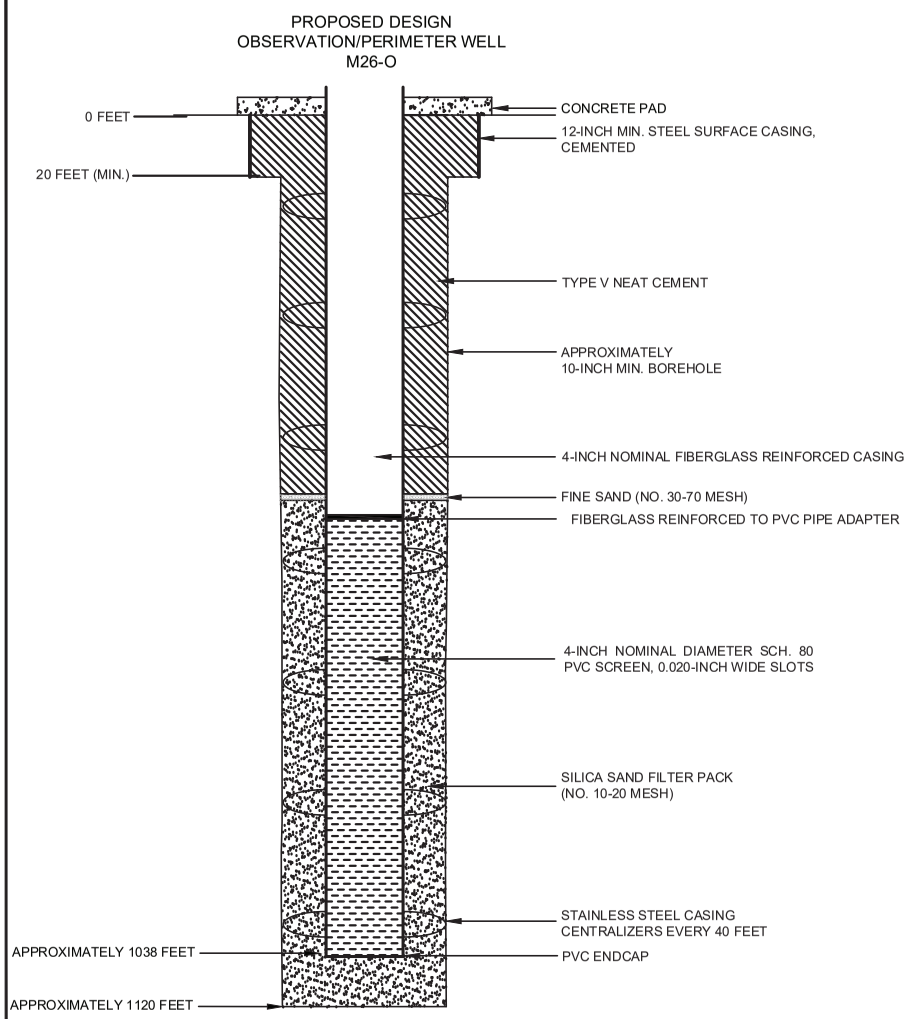

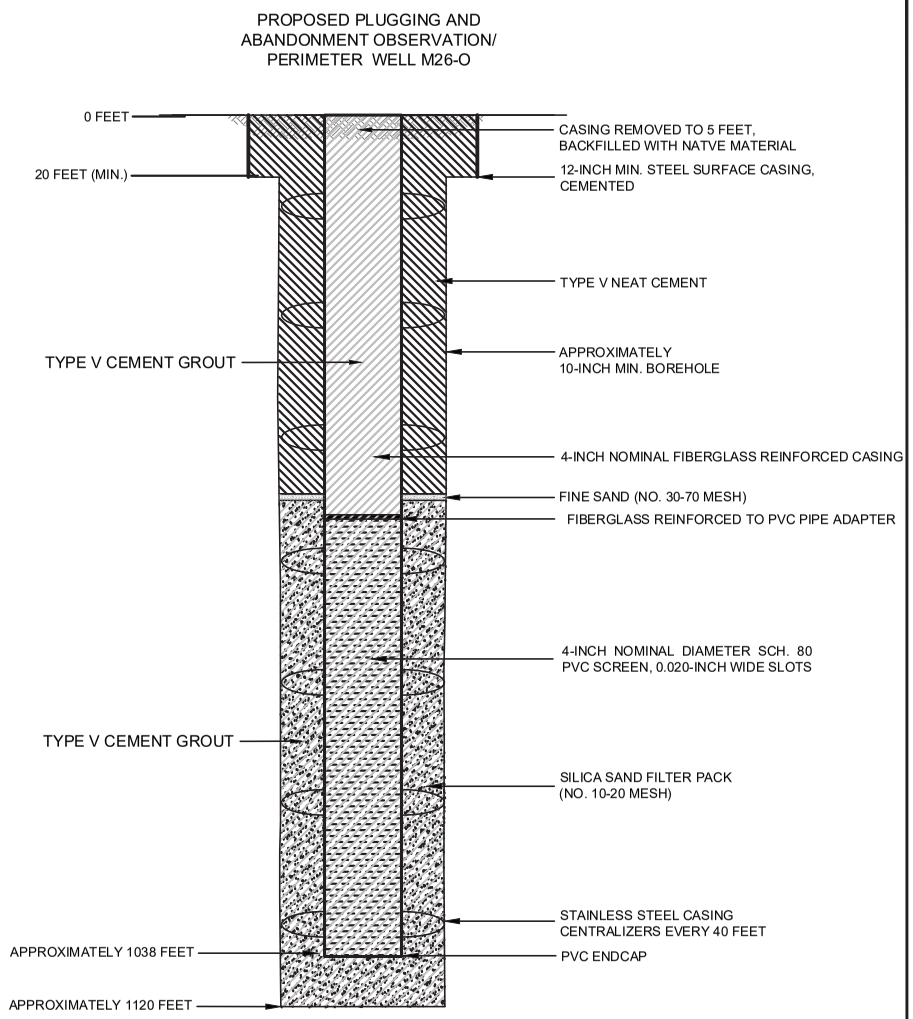

NOTES

1. WELL DESIGN DETAILS ARE BASED ON CORE HOLE AND WELL LOG RECORDS.

HALEY ALDRICH

FLORENCE COPPER, INC.
FLORENCE, ARIZONA

ABANDONMENT SCHEMATIC
OBSERVATION/PERIMETER
WELL M26-O

SEPTEMBER 2019
SCALE: AS SHOWN

FIGURE 1

OMB No. 2040-0042 Approval Expires 4/30/2022

United States Environmental Protection Agency

WELL REWORK RECORD, PLUGGING AND ABANDONMENT PLAN, OR PLUGGING AND ABANDONMENT AFFIDAVIT

Name and Address, Phone Number and/or Email of Permittee

Florence Copper Project
1575 W Hunt Hwy,
Florence, AZ 85132

Permit or EPA ID Number	API Number	Full Well Name
R9UIC-AZ3-FY11-1		M27-LBF

State	County
Arizona	Pinal

Locate well in two directions from nearest lines of quarter section and drilling unit

Latitude 33.05456055

Surface Location

SW **1/4 of** NW **1/4 of Section** 28 **Township** 4S **Range** 9E

Longitude -111.4344091

_____ **ft. from (N/S)** _____ **Line of quarter section**

_____ **ft. from (E/W)** _____ **Line of quarter section.**

Well Class	Timing of Action (pick one)	Type of Action (pick one)
☐ Class I ☐ Class II ☑ Class III ☐ Class V	☑ Notice Prior to Work Date Expected to Commence March 2021 ☐ Report After Work Date Work Ended	☐ Well Rework ☑ Plugging and Abandonment ☐ Conversion to a Non-Injection Well

Provide a narrative description of the work planned to be performed, or that was performed. Use additional pages as necessary. See instructions.

A workover rig capable of performing the required abandonment operations at the required depths will be moved in and set up over the well. The well casing will be inspected to determine the depth to which the well remains open and if any obstructions are present in the casing; the presence and condition of any existing surface casing will also be documented. If necessary, the well casing will be cleaned out to the bottom of the deepest screen or perforation to enable placement of cement seals.

If surface casing is present, an attempt will be made to remove it. If removal of the surface casing is not feasible, it will be left in the hole and perforated as needed to allow an annular seal to be placed to a depth of at least 25 feet bgs. In areas of agricultural use, the surface casing will be cut at least 5 feet bgs and removed.

If the surface casing cannot be removed, it will be perforated from at least 20 feet below the bedrock-LBFU contact to at least 20 feet above the contact; from at least 20 feet below the base of the MFGU to at least 20 feet above the top of the MFGU; and from at least 25 feet bgs to 5 feet bgs.

A tremie pipe will be used to place Type V cement in the open well from the bottom of the well casing to the top of the well casing. Cement retainers, as described above, will be used to force cement grout into the annulus and behind perforated screen intervals, as necessary.

If the well casing has been obstructed, as much cement as possible will be placed from 100 feet below the LBFU-bedrock contact to the top of the casing.

The volume of Type V cement will be recorded and will not be less than the estimated volume of material required to fill each interval. All cement grout will consist of Type V cement, or equivalent approved in accordance with the UIC Permit.

Certification

I certify under the penalty of law that I have personally examined and am familiar with the information submitted in this document and all attachments and that, based on my inquiry of those individuals immediately responsible for obtaining the information, I believe that the information is true, accurate, and complete. I am aware that there are significant penalties for submitting false information, including the possibliity of fine and imprisonment. (Ref. 40 CFR § 144.32)

Name and Official Title *(Please type or print)*	Signature	Date Signed
Dan Johnson, VP - General Manager		10/3/2019

INSTRUCTIONS FOR FORM 7520-19

This form replaces forms 7520-12 and 7520-14. Use this form only when work is planned or has occurred that affects the well's construction or operation as an injection well, including work on the casing, tubing or packer (or for shallow Class V wells, the subsurface fluid emplacement network). Use one form per injection well. While reports or other information developed by contractors or service companies may be attached, this form must be signed by a responsible entity as described at 40 CFR 144.32. Note: operators closing Class V wells should use Form 7520-17.

NAME, ADDRESS, PHONE AND/OR EMAIL OF PERMITTEE: Enter the name and street address, city/town, state, and ZIP code of the permittee. Also provide an email address (if available) and/or a phone number.

PERMIT OR EPA ID NUMBER: Enter the well identification number or permit number assigned to the well by the EPA or the permitting authority.

API NUMBER: Enter the number assigned by the local jurisdiction (usually a State Oil and Gas Agency) using the American Petroleum Institute standard numbering system.

FULL WELL NAME: Enter the full name of the well or project.

Enter the **STATE** and **COUNTY** where the well is located. For States that do not have counties, use the name of that State's equivalent jurisdiction at a more local level.

WELL LOCATION: Fill in the complete township, range, and section to the nearest quarter-quarter section. A township is north or south of the baseline, and a range is east or west of the principal meridian (e.g., T12N, R34W). Also include the distance, in feet, from the nearest north or south line and nearest east or west line of the quarter-section. Also, enter the **latitude** and **longitude** of the well in decimal degrees, to five or six places if possible; be sure to include a negative sign for the longitude of a well in the Western Hemisphere and a negative sign for the latitude of a well in the Southern Hemisphere.

Enter the **WELL CLASS,** i.e., the class of injection well as defined in 40 CFR 144.6.

TIMING OF THE ACTION: Check ***Notice prior to work*** if the activity has not yet occurred (i.e., is planned). Check ***Report after work*** if the activity described has already occurred. As appropriate, include the date the activity is expected to start or the date the activity was completed. (Note this may not be available, e.g., for a plugging plan submitted with a permit application.)

TYPE OF ACTION: Check the appropriate box to describe the kind of activity being reported. Check ***Well Rework*** for work that was/will be performed on the well after it has already been in operation as an injection well. Check ***Plugging and Abandonment*** to report on plans for or descriptions of final closure/plugging after use as an injection well. Check ***Conversion to a Non-Injection Well*** if the well is to be converted to something other than an injection well.

Provide a **NARRATIVE DESCRIPTION** of the work planned to be performed, or that was performed. The narrative should include a description of the main procedures planned or that occurred during the work activity. A service company report, daily report, or similar document may be attached if it includes all the requested information and is clear and legible.

For well reworks, include the following information: The reason for the well rework; depths of activity; type of activity; changes to injection well configuration, well casing, or cement behind casing; any plug added to the well and its depth; any newly drilled interval and its depth; method(s) to demonstrate that the well has mechanical integrity (as applicable); and any deviations from the approved rework plan (as applicable).

For a well plugging plan, include the following information: Reason for the well plugging; number of plugs placed, and their depths; materials used as plugs (e.g., cast iron bridge plug, cement, cement retainer); method to set plugs; and wait-on-cement times, if any. Also provide one or more cost estimates from an independent firm in the business of plugging and abandoning wells to plug the well as described in the plan.

For well plugging affidavit, include the following information: Reason for the well plugging; number of plugs placed, and their depths; materials used as plugs (e.g., cast iron bridge plug, cement, cement retainer); method to set plugs; wait-on-cement times, if any; and any deviations from the approved plugging plan (if applicable).

For conversion to a non-injection well, include the following information: Depths of activity; type of activity; changes to injection well configuration, well casing, or cement behind casing; any plug added to the well and its depth; any newly drilled interval and its depth; depths of new perforations; and method(s) to demonstrate that the well has mechanical integrity (as applicable).

For all of the above activities, include a well sketch depicting the work, results of well tests/logging performed, service company tickets, and any other available information demonstrating how the work was/is to be performed. Also, specify whether depths are below ground surface, relative to Kelly bushing, etc.

CERTIFICATION: This form must be signed and dated by either: a responsible corporate officer for a corporation, by a general partner for a partnership, by the proprietor of a sole proprietorship, or by a principal executive or ranking elected official for a public agency.

PAPERWORK REDUCTION ACT NOTICE: The public reporting and recordkeeping burden for this collection of information is estimated to average between 6.0 and 7.9 hours per response, depending on the injection well class. Burden means the total time, effort, or financial resource expended by persons to generate, maintain, retain, or disclose or provide information to or for a Federal Agency. This includes the time needed to review instructions; develop, acquire, install, and utilize technology and systems for the purposes of collecting, validating, and verifying information, processing and maintaining information, and disclosing and providing information; adjust the existing ways to comply with any previously applicable instructions and requirements; train personnel to be able to respond to the collection of information; search data sources; complete and review the collection of information; and, transmit or otherwise disclose the information. An agency may not conduct or sponsor, and a person is not required to respond to, a collection of information unless it displays a currently valid OMB control number. Send comments on the Agency's need for this information, the accuracy of the provided burden estimates, and any suggested methods for minimizing respondent burden, including the use of automated collection techniques to Director, Collection Strategies Division, U.S. Environmental Protection Agency (2822), 1200 Pennsylvania Ave., NW., Washington, D.C. 20460. Include the OMB control number in any correspondence. Do not send the completed forms to this address.

PROPOSED DESIGN
OBSERVATION/PERIMETER WELL
M27-LBF

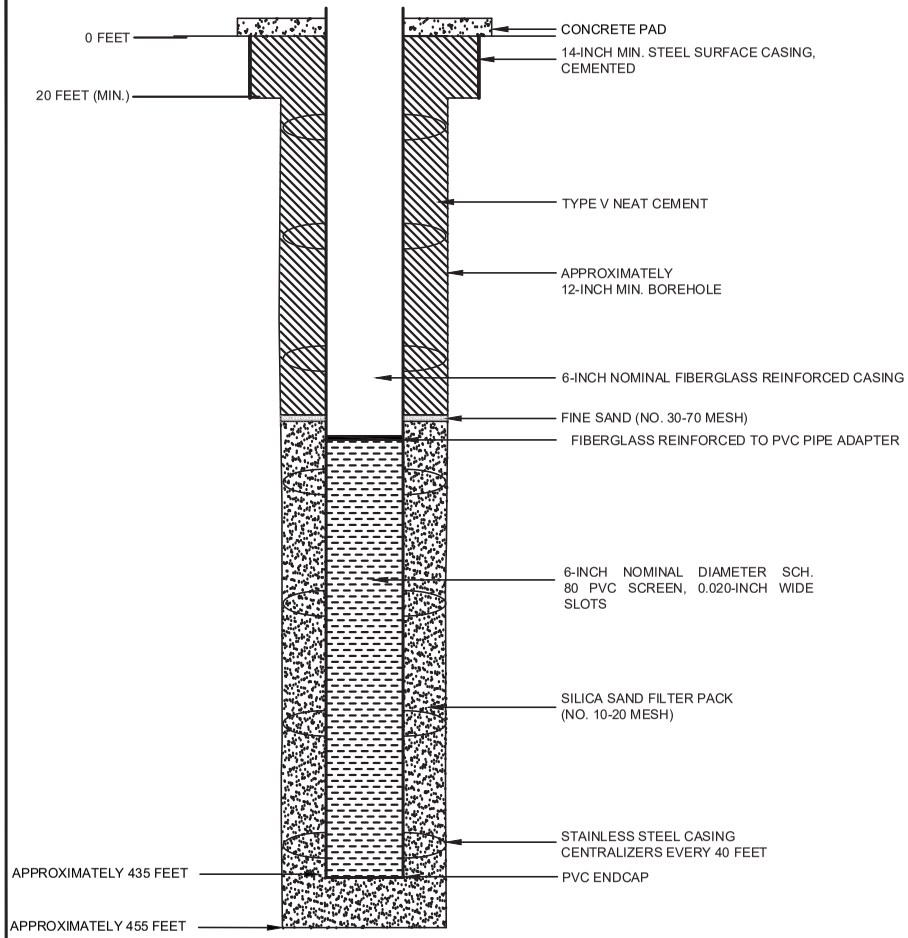

PROPOSED PLUGGING AND
ABANDONMENT OBSERVATION/
PERIMETER WELL M27-LBF

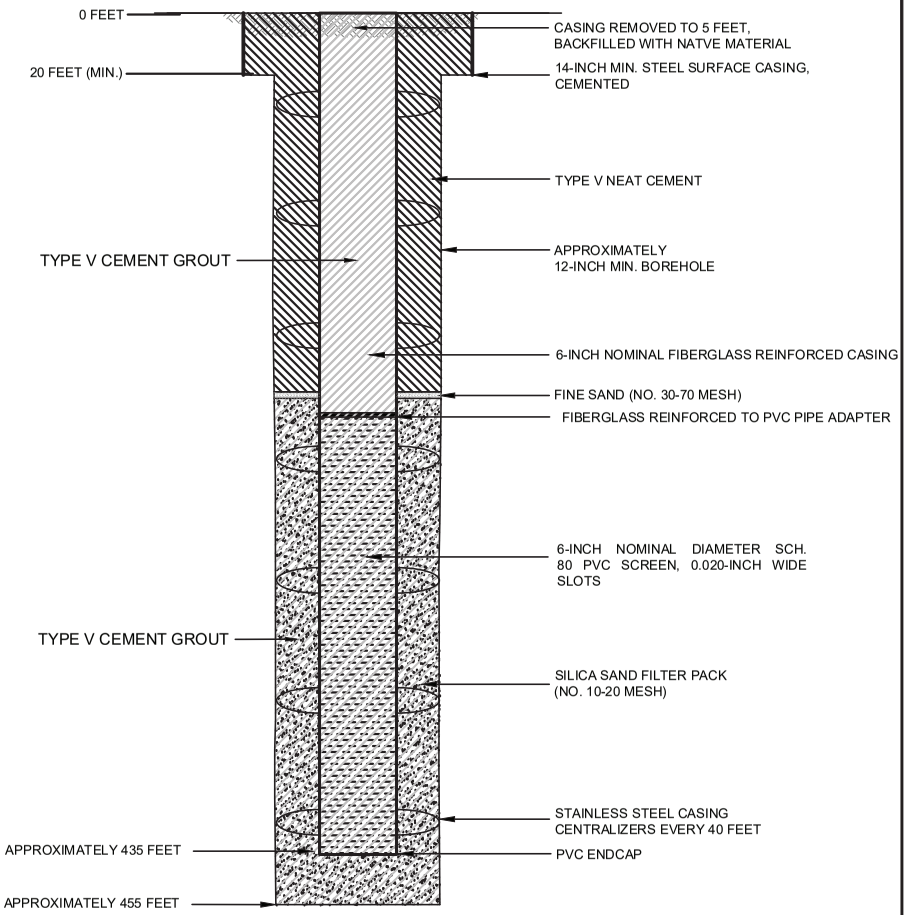

NOTES

1. WELL DESIGN DETAILS ARE BASED ON CORE HOLE AND WELL LOG RECORDS.

HALEY ALDRICH

FLORENCE COPPER, INC.
FLORENCE, ARIZONA

ABANDONMENT SCHEMATIC
OBSERVATION/PERIMETER
WELL M27-LBF

SEPTEMBER 2019
SCALE: AS SHOWN

FIGURE 1

OMB No. 2040-0042 Approval Expires 4/30/2022

United States Environmental Protection Agency

WELL REWORK RECORD, PLUGGING AND ABANDONMENT PLAN, OR PLUGGING AND ABANDONMENT AFFIDAVIT

Name and Address, Phone Number and/or Email of Permittee

Florence Copper Project
1575 W Hunt Hwy,
Florence, AZ 85132

Permit or EPA ID Number	API Number	Full Well Name
R9UIC-AZ3-FY11-1		M28-LBF

State	County
Arizona	Pinal

Locate well in two directions from nearest lines of quarter section and drilling unit

Latitude 33.05470276

Longitude -111.4344367

Surface Location

SW **1/4 of** NW **1/4 of Section** 28 **Township** 4S **Range** 9E

_____ **ft. from (N/S)** _____ **Line of quarter section**

_____ **ft. from (E/W)** _____ **Line of quarter section.**

Well Class	Timing of Action (pick one)	Type of Action (pick one)
☐ Class I ☐ Class II ☑ Class III ☐ Class V	☑ Notice Prior to Work Date Expected to Commence March 2021 ☐ Report After Work Date Work Ended	☐ Well Rework ☑ Plugging and Abandonment ☐ Conversion to a Non-Injection Well

Provide a narrative description of the work planned to be performed, or that was performed. Use additional pages as necessary. See instructions.

A workover rig capable of performing the required abandonment operations at the required depths will be moved in and set up over the well. The well casing will be inspected to determine the depth to which the well remains open and if any obstructions are present in the casing; the presence and condition of any existing surface casing will also be documented. If necessary, the well casing will be cleaned out to the bottom of the deepest screen or perforation to enable placement of cement seals.

If surface casing is present, an attempt will be made to remove it. If removal of the surface casing is not feasible, it will be left in the hole and perforated as needed to allow an annular seal to be placed to a depth of at least 25 feet bgs. In areas of agricultural use, the surface casing will be cut at least 5 feet bgs and removed.

If the surface casing cannot be removed, it will be perforated from at least 20 feet below the bedrock-LBFU contact to at least 20 feet above the contact; from at least 20 feet below the base of the MFGU to at least 20 feet above the top of the MFGU; and from at least 25 feet bgs to 5 feet bgs.

A tremie pipe will be used to place Type V cement in the open well from the bottom of the well casing to the top of the well casing. Cement retainers, as described above, will be used to force cement grout into the annulus and behind perforated screen intervals, as necessary.

If the well casing has been obstructed, as much cement as possible will be placed from 100 feet below the LBFU-bedrock contact to the top of the casing.

The volume of Type V cement will be recorded and will not be less than the estimated volume of material required to fill each interval. All cement grout will consist of Type V cement, or equivalent approved in accordance with the UIC Permit.

Certification

I certify under the penalty of law that I have personally examined and am familiar with the information submitted in this document and all attachments and that, based on my inquiry of those individuals immediately responsible for obtaining the information, I believe that the information is true, accurate, and complete. I am aware that there are significant penalties for submitting false information, including the possibliity of fine and imprisonment. (Ref. 40 CFR § 144.32)

Name and Official Title *(Please type or print)*	Signature	Date Signed
Dan Johnson, VP - General Manager		10/3/2019

INSTRUCTIONS FOR FORM 7520-19

This form replaces forms 7520-12 and 7520-14. Use this form only when work is planned or has occurred that affects the well's construction or operation as an injection well, including work on the casing, tubing or packer (or for shallow Class V wells, the subsurface fluid emplacement network). Use one form per injection well. While reports or other information developed by contractors or service companies may be attached, this form must be signed by a responsible entity as described at 40 CFR 144.32. Note: operators closing Class V wells should use Form 7520-17.

NAME, ADDRESS, PHONE AND/OR EMAIL OF PERMITTEE: Enter the name and street address, city/town, state, and ZIP code of the permittee. Also provide an email address (if available) and/or a phone number.

PERMIT OR EPA ID NUMBER: Enter the well identification number or permit number assigned to the well by the EPA or the permitting authority.

API NUMBER: Enter the number assigned by the local jurisdiction (usually a State Oil and Gas Agency) using the American Petroleum Institute standard numbering system.

FULL WELL NAME: Enter the full name of the well or project.

Enter the **STATE** and **COUNTY** where the well is located. For States that do not have counties, use the name of that State's equivalent jurisdiction at a more local level.

WELL LOCATION: Fill in the complete township, range, and section to the nearest quarter-quarter section. A township is north or south of the baseline, and a range is east or west of the principal meridian (e.g., T12N, R34W). Also include the distance, in feet, from the nearest north or south line and nearest east or west line of the quarter-section. Also, enter the **latitude** and **longitude** of the well in decimal degrees, to five or six places if possible; be sure to include a negative sign for the longitude of a well in the Western Hemisphere and a negative sign for the latitude of a well in the Southern Hemisphere.

Enter the **WELL CLASS,** i.e., the class of injection well as defined in 40 CFR 144.6.

TIMING OF THE ACTION: Check ***Notice prior to work*** if the activity has not yet occurred (i.e., is planned). Check ***Report after work*** if the activity described has already occurred. As appropriate, include the date the activity is expected to start or the date the activity was completed. (Note this may not be available, e.g., for a plugging plan submitted with a permit application.)

TYPE OF ACTION: Check the appropriate box to describe the kind of activity being reported. Check ***Well Rework*** for work that was/will be performed on the well after it has already been in operation as an injection well. Check ***Plugging and Abandonment*** to report on plans for or descriptions of final closure/plugging after use as an injection well. Check ***Conversion to a Non-Injection Well*** if the well is to be converted to something other than an injection well.

Provide a **NARRATIVE DESCRIPTION** of the work planned to be performed, or that was performed. The narrative should include a description of the main procedures planned or that occurred during the work activity. A service company report, daily report, or similar document may be attached if it includes all the requested information and is clear and legible.

For well reworks, include the following information: The reason for the well rework; depths of activity; type of activity; changes to injection well configuration, well casing, or cement behind casing; any plug added to the well and its depth; any newly drilled interval and its depth; method(s) to demonstrate that the well has mechanical integrity (as applicable); and any deviations from the approved rework plan (as applicable).

For a well plugging plan, include the following information: Reason for the well plugging; number of plugs placed, and their depths; materials used as plugs (e.g., cast iron bridge plug, cement, cement retainer); method to set plugs; and wait-on-cement times, if any. Also provide one or more cost estimates from an independent firm in the business of plugging and abandoning wells to plug the well as described in the plan.

For well plugging affidavit, include the following information: Reason for the well plugging; number of plugs placed, and their depths; materials used as plugs (e.g., cast iron bridge plug, cement, cement retainer); method to set plugs; wait-on-cement times, if any; and any deviations from the approved plugging plan (if applicable).

For conversion to a non-injection well, include the following information: Depths of activity; type of activity; changes to injection well configuration, well casing, or cement behind casing; any plug added to the well and its depth; any newly drilled interval and its depth; depths of new perforations; and method(s) to demonstrate that the well has mechanical integrity (as applicable).

For all of the above activities, include a well sketch depicting the work, results of well tests/logging performed, service company tickets, and any other available information demonstrating how the work was/is to be performed. Also, specify whether depths are below ground surface, relative to Kelly bushing, etc.

CERTIFICATION: This form must be signed and dated by either: a responsible corporate officer for a corporation, by a general partner for a partnership, by the proprietor of a sole proprietorship, or by a principal executive or ranking elected official for a public agency.

PAPERWORK REDUCTION ACT NOTICE: The public reporting and recordkeeping burden for this collection of information is estimated to average between 6.0 and 7.9 hours per response, depending on the injection well class. Burden means the total time, effort, or financial resource expended by persons to generate, maintain, retain, or disclose or provide information to or for a Federal Agency. This includes the time needed to review instructions; develop, acquire, install, and utilize technology and systems for the purposes of collecting, validating, and verifying information, processing and maintaining information, and disclosing and providing information; adjust the existing ways to comply with any previously applicable instructions and requirements; train personnel to be able to respond to the collection of information; search data sources; complete and review the collection of information; and, transmit or otherwise disclose the information. An agency may not conduct or sponsor, and a person is not required to respond to, a collection of information unless it displays a currently valid OMB control number. Send comments on the Agency's need for this information, the accuracy of the provided burden estimates, and any suggested methods for minimizing respondent burden, including the use of automated collection techniques to Director, Collection Strategies Division, U.S. Environmental Protection Agency (2822), 1200 Pennsylvania Ave., NW., Washington, D.C. 20460. Include the OMB control number in any correspondence. Do not send the completed forms to this address.

PROPOSED DESIGN
OBSERVATION/PERIMETER WELL
M28-LBF

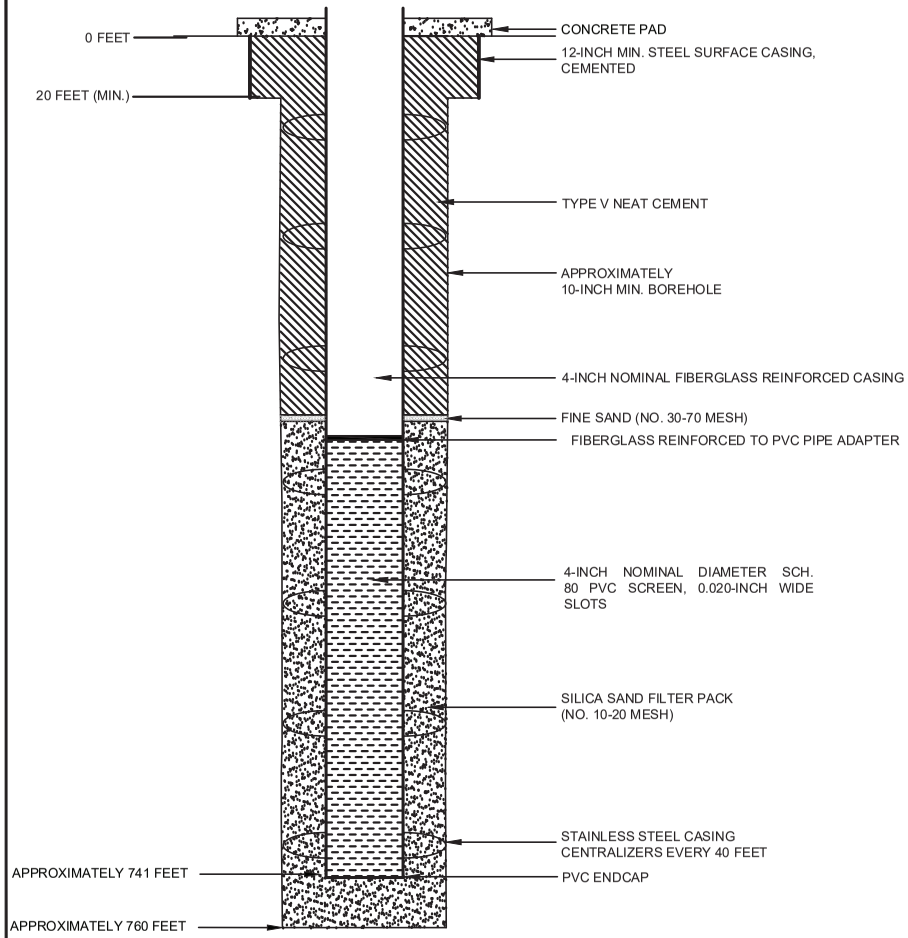

PROPOSED PLUGGING AND
ABANDONMENT OBSERVATION/
PERIMETER WELL M28-LBF

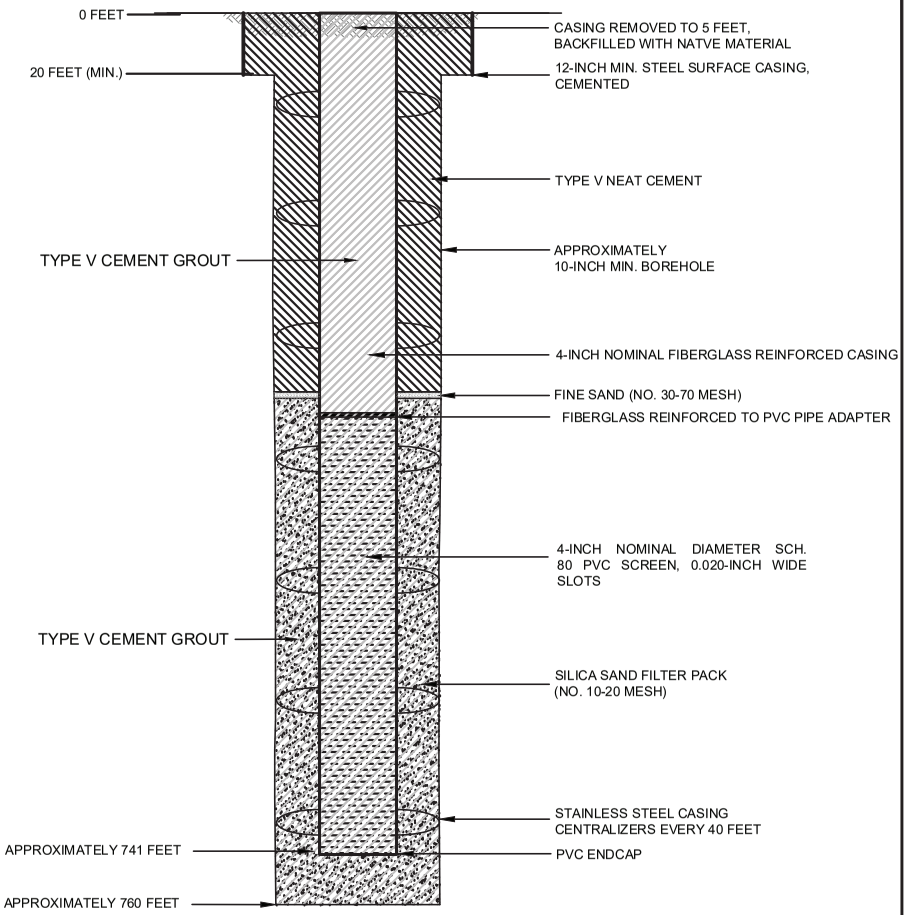

NOTES

1. WELL DESIGN DETAILS ARE BASED ON CORE HOLE AND WELL LOG RECORDS.

HALEY ALDRICH

FLORENCE COPPER, INC.
FLORENCE, ARIZONA

ABANDONMENT SCHEMATIC
OBSERVATION/PERIMETER
WELL M28-LBF

SEPTEMBER 2019
SCALE: AS SHOWN

FIGURE 1

OMB No. 2040-0042 Approval Expires 4/30/2022

United States Environmental Protection Agency

EPA

WELL REWORK RECORD, PLUGGING AND ABANDONMENT PLAN, OR PLUGGING AND ABANDONMENT AFFIDAVIT

Name and Address, Phone Number and/or Email of Permittee

Florence Copper Project
1575 W Hunt Hwy,
Florence, AZ 85132

Permit or EPA ID Number	API Number	Full Well Name
R9UIC-AZ3-FY11-1		M29-LBF

State	County
Arizona	Pinal

Locate well in two directions from nearest lines of quarter section and drilling unit

Latitude 33.05470521

Surface Location

SW **1/4 of** NW **1/4 of Section** 28 **Township** 4S **Range** 9E

Longitude -111.4342158

_____ **ft. from (N/S)** _____ **Line of quarter section**

_____ **ft. from (E/W)** _____ **Line of quarter section.**

Well Class	Timing of Action (pick one)	Type of Action (pick one)
☐ Class I ☐ Class II ☑ Class III ☐ Class V	☑ Notice Prior to Work Date Expected to Commence March 2021 ☐ Report After Work Date Work Ended	☐ Well Rework ☑ Plugging and Abandonment ☐ Conversion to a Non-Injection Well

Provide a narrative description of the work planned to be performed, or that was performed. Use additional pages as necessary. See instructions.

A workover rig capable of performing the required abandonment operations at the required depths will be moved in and set up over the well. The well casing will be inspected to determine the depth to which the well remains open and if any obstructions are present in the casing; the presence and condition of any existing surface casing will also be documented. If necessary, the well casing will be cleaned out to the bottom of the deepest screen or perforation to enable placement of cement seals.

If surface casing is present, an attempt will be made to remove it. If removal of the surface casing is not feasible, it will be left in the hole and perforated as needed to allow an annular seal to be placed to a depth of at least 25 feet bgs. In areas of agricultural use, the surface casing will be cut at least 5 feet bgs and removed.

If the surface casing cannot be removed, it will be perforated from at least 20 feet below the bedrock-LBFU contact to at least 20 feet above the contact; from at least 20 feet below the base of the MFGU to at least 20 feet above the top of the MFGU; and from at least 25 feet bgs to 5 feet bgs.

A tremie pipe will be used to place Type V cement in the open well from the bottom of the well casing to the top of the well casing. Cement retainers, as described above, will be used to force cement grout into the annulus and behind perforated screen intervals, as necessary.

If the well casing has been obstructed, as much cement as possible will be placed from 100 feet below the LBFU-bedrock contact to the top of the casing.

The volume of Type V cement will be recorded and will not be less than the estimated volume of material required to fill each interval. All cement grout will consist of Type V cement, or equivalent approved in accordance with the UIC Permit.

Certification

I certify under the penalty of law that I have personally examined and am familiar with the information submitted in this document and all attachments and that, based on my inquiry of those individuals immediately responsible for obtaining the information, I believe that the information is true, accurate, and complete. I am aware that there are significant penalties for submitting false information, including the possibliity of fine and imprisonment. (Ref. 40 CFR § 144.32)

Name and Official Title *(Please type or print)*	Signature	Date Signed
Dan Johnson, VP - General Manager		10/3/2019

INSTRUCTIONS FOR FORM 7520-19

This form replaces forms 7520-12 and 7520-14. Use this form only when work is planned or has occurred that affects the well's construction or operation as an injection well, including work on the casing, tubing or packer (or for shallow Class V wells, the subsurface fluid emplacement network). Use one form per injection well. While reports or other information developed by contractors or service companies may be attached, this form must be signed by a responsible entity as described at 40 CFR 144.32. Note: operators closing Class V wells should use Form 7520-17.

NAME, ADDRESS, PHONE AND/OR EMAIL OF PERMITTEE: Enter the name and street address, city/town, state, and ZIP code of the permittee. Also provide an email address (if available) and/or a phone number.

PERMIT OR EPA ID NUMBER: Enter the well identification number or permit number assigned to the well by the EPA or the permitting authority.

API NUMBER: Enter the number assigned by the local jurisdiction (usually a State Oil and Gas Agency) using the American Petroleum Institute standard numbering system.

FULL WELL NAME: Enter the full name of the well or project.

Enter the **STATE** and **COUNTY** where the well is located. For States that do not have counties, use the name of that State's equivalent jurisdiction at a more local level.

WELL LOCATION: Fill in the complete township, range, and section to the nearest quarter-quarter section. A township is north or south of the baseline, and a range is east or west of the principal meridian (e.g., T12N, R34W). Also include the distance, in feet, from the nearest north or south line and nearest east or west line of the quarter-section. Also, enter the **latitude** and **longitude** of the well in decimal degrees, to five or six places if possible; be sure to include a negative sign for the longitude of a well in the Western Hemisphere and a negative sign for the latitude of a well in the Southern Hemisphere.

Enter the **WELL CLASS,** i.e., the class of injection well as defined in 40 CFR 144.6.

TIMING OF THE ACTION: Check ***Notice prior to work*** if the activity has not yet occurred (i.e., is planned). Check ***Report after work*** if the activity described has already occurred. As appropriate, include the date the activity is expected to start or the date the activity was completed. (Note this may not be available, e.g., for a plugging plan submitted with a permit application.)

TYPE OF ACTION: Check the appropriate box to describe the kind of activity being reported. Check ***Well Rework*** for work that was/will be performed on the well after it has already been in operation as an injection well. Check ***Plugging and Abandonment*** to report on plans for or descriptions of final closure/plugging after use as an injection well. Check ***Conversion to a Non-Injection Well*** if the well is to be converted to something other than an injection well.

Provide a **NARRATIVE DESCRIPTION** of the work planned to be performed, or that was performed. The narrative should include a description of the main procedures planned or that occurred during the work activity. A service company report, daily report, or similar document may be attached if it includes all the requested information and is clear and legible.

For well reworks, include the following information: The reason for the well rework; depths of activity; type of activity; changes to injection well configuration, well casing, or cement behind casing; any plug added to the well and its depth; any newly drilled interval and its depth; method(s) to demonstrate that the well has mechanical integrity (as applicable); and any deviations from the approved rework plan (as applicable).

For a well plugging plan, include the following information: Reason for the well plugging; number of plugs placed, and their depths; materials used as plugs (e.g., cast iron bridge plug, cement, cement retainer); method to set plugs; and wait-on-cement times, if any. Also provide one or more cost estimates from an independent firm in the business of plugging and abandoning wells to plug the well as described in the plan.

For well plugging affidavit, include the following information: Reason for the well plugging; number of plugs placed, and their depths; materials used as plugs (e.g., cast iron bridge plug, cement, cement retainer); method to set plugs; wait-on-cement times, if any; and any deviations from the approved plugging plan (if applicable).

For conversion to a non-injection well, include the following information: Depths of activity; type of activity; changes to injection well configuration, well casing, or cement behind casing; any plug added to the well and its depth; any newly drilled interval and its depth; depths of new perforations; and method(s) to demonstrate that the well has mechanical integrity (as applicable).

For all of the above activities, include a well sketch depicting the work, results of well tests/logging performed, service company tickets, and any other available information demonstrating how the work was/is to be performed. Also, specify whether depths are below ground surface, relative to Kelly bushing, etc.

CERTIFICATION: This form must be signed and dated by either: a responsible corporate officer for a corporation, by a general partner for a partnership, by the proprietor of a sole proprietorship, or by a principal executive or ranking elected official for a public agency.

PAPERWORK REDUCTION ACT NOTICE: The public reporting and recordkeeping burden for this collection of information is estimated to average between 6.0 and 7.9 hours per response, depending on the injection well class. Burden means the total time, effort, or financial resource expended by persons to generate, maintain, retain, or disclose or provide information to or for a Federal Agency. This includes the time needed to review instructions; develop, acquire, install, and utilize technology and systems for the purposes of collecting, validating, and verifying information, processing and maintaining information, and disclosing and providing information; adjust the existing ways to comply with any previously applicable instructions and requirements; train personnel to be able to respond to the collection of information; search data sources; complete and review the collection of information; and, transmit or otherwise disclose the information. An agency may not conduct or sponsor, and a person is not required to respond to, a collection of information unless it displays a currently valid OMB control number. Send comments on the Agency's need for this information, the accuracy of the provided burden estimates, and any suggested methods for minimizing respondent burden, including the use of automated collection techniques to Director, Collection Strategies Division, U.S. Environmental Protection Agency (2822), 1200 Pennsylvania Ave., NW., Washington, D.C. 20460. Include the OMB control number in any correspondence. Do not send the completed forms to this address.

PROPOSED DESIGN
OBSERVATION/PERIMETER WELL
M29-UBF

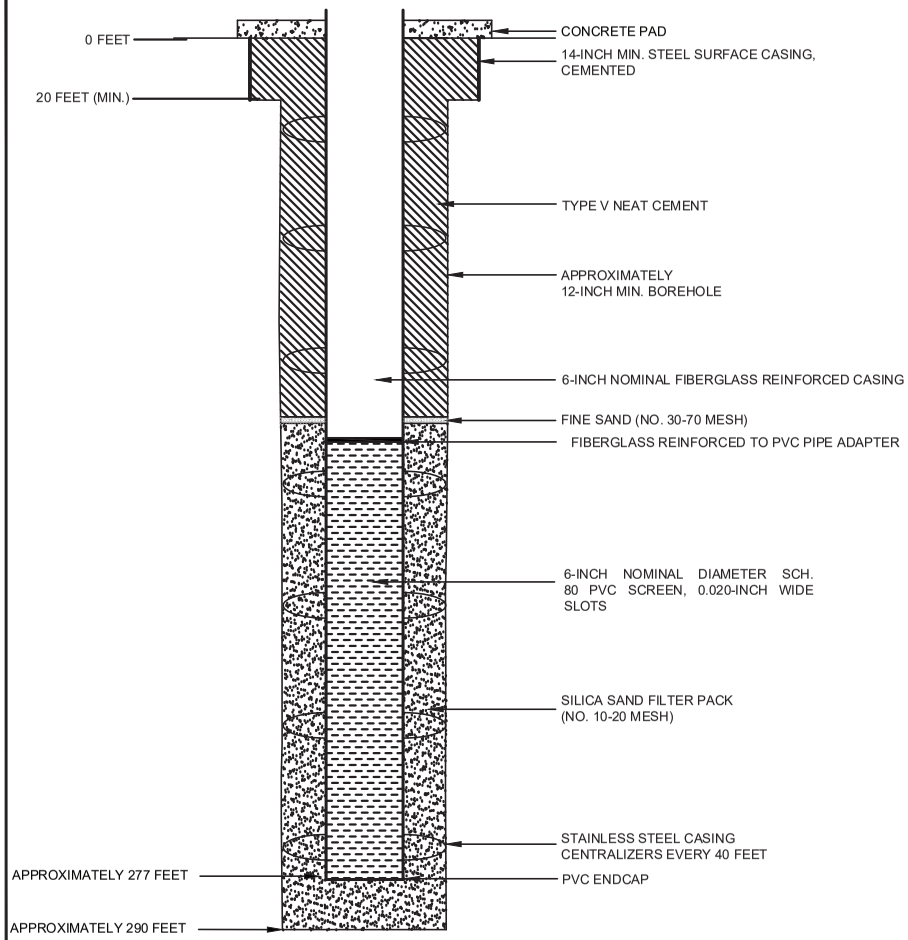

PROPOSED PLUGGING AND
ABANDONMENT OBSERVATION/
PERIMETER WELL M29-UBF

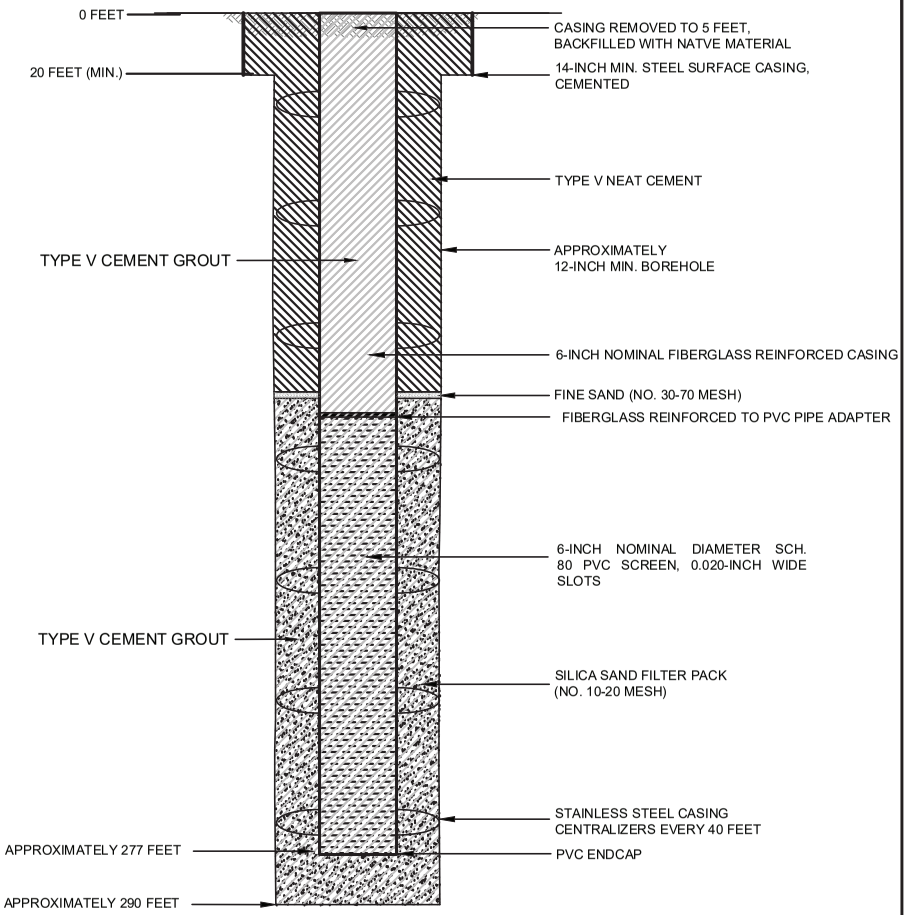

NOTES

1. WELL DESIGN DETAILS ARE BASED ON CORE HOLE AND WELL LOG RECORDS.

HALEY ALDRICH

FLORENCE COPPER, INC.
FLORENCE, ARIZONA

ABANDONMENT SCHEMATIC
OBSERVATION/PERIMETER
WELL M29-UBF

SEPTEMBER 2019
SCALE: AS SHOWN

FIGURE 1

OMB No. 2040-0042 Approval Expires 4/30/2022

United States Environmental Protection Agency

EPA

WELL REWORK RECORD, PLUGGING AND ABANDONMENT PLAN, OR PLUGGING AND ABANDONMENT AFFIDAVIT

Name and Address, Phone Number and/or Email of Permittee

Florence Copper Project
1575 W Hunt Hwy,
Florence, AZ 85132

Permit or EPA ID Number	API Number	Full Well Name
R9UIC-AZ3-FY11-1		M30-O

State	County
Arizona	Pinal

Locate well in two directions from nearest lines of quarter section and drilling unit

Latitude 33.0536632

Surface Location

SW **1/4 of** NE **1/4 of Section** 28 **Township** 4S **Range** 9E

Longitude -111.4273007

_____ **ft. from (N/S)** _____ **Line of quarter section**

_____ **ft. from (E/W)** _____ **Line of quarter section.**

Well Class	Timing of Action (pick one)	Type of Action (pick one)
☐ Class I ☐ Class II ☑ Class III ☐ Class V	☑ Notice Prior to Work Date Expected to Commence March 2021 ☐ Report After Work Date Work Ended	☐ Well Rework ☑ Plugging and Abandonment ☐ Conversion to a Non-Injection Well

Provide a narrative description of the work planned to be performed, or that was performed. Use additional pages as necessary. See instructions.

A workover rig capable of performing the required abandonment operations at the required depths will be moved in and set up over the well. The well casing will be inspected to determine the depth to which the well remains open and if any obstructions are present in the casing; the presence and condition of any existing surface casing will also be documented. If necessary, the well casing will be cleaned out to the bottom of the deepest screen or perforation to enable placement of cement seals.

If surface casing is present, an attempt will be made to remove it. If removal of the surface casing is not feasible, it will be left in the hole and perforated as needed to allow an annular seal to be placed to a depth of at least 25 feet bgs. In areas of agricultural use, the surface casing will be cut at least 5 feet bgs and removed.

If the surface casing cannot be removed, it will be perforated from at least 20 feet below the bedrock-LBFU contact to at least 20 feet above the contact; from at least 20 feet below the base of the MFGU to at least 20 feet above the top of the MFGU; and from at least 25 feet bgs to 5 feet bgs.

A tremie pipe will be used to place Type V cement in the open well from the bottom of the well casing to the top of the well casing. Cement retainers, as described above, will be used to force cement grout into the annulus and behind perforated screen intervals, as necessary.

If the well casing has been obstructed, as much cement as possible will be placed from 100 feet below the LBFU-bedrock contact to the top of the casing.

The volume of Type V cement will be recorded and will not be less than the estimated volume of material required to fill each interval. All cement grout will consist of Type V cement, or equivalent approved in accordance with the UIC Permit.

Certification

I certify under the penalty of law that I have personally examined and am familiar with the information submitted in this document and all attachments and that, based on my inquiry of those individuals immediately responsible for obtaining the information, I believe that the information is true, accurate, and complete. I am aware that there are significant penalties for submitting false information, including the possibliity of fine and imprisonment. (Ref. 40 CFR § 144.32)

Name and Official Title *(Please type or print)*	Signature	Date Signed
Dan Johnson, VP - General Manager		10/3/2019

INSTRUCTIONS FOR FORM 7520-19

This form replaces forms 7520-12 and 7520-14. Use this form only when work is planned or has occurred that affects the well's construction or operation as an injection well, including work on the casing, tubing or packer (or for shallow Class V wells, the subsurface fluid emplacement network). Use one form per injection well. While reports or other information developed by contractors or service companies may be attached, this form must be signed by a responsible entity as described at 40 CFR 144.32. Note: operators closing Class V wells should use Form 7520-17.

NAME, ADDRESS, PHONE AND/OR EMAIL OF PERMITTEE: Enter the name and street address, city/town, state, and ZIP code of the permittee. Also provide an email address (if available) and/or a phone number.

PERMIT OR EPA ID NUMBER: Enter the well identification number or permit number assigned to the well by the EPA or the permitting authority.

API NUMBER: Enter the number assigned by the local jurisdiction (usually a State Oil and Gas Agency) using the American Petroleum Institute standard numbering system.

FULL WELL NAME: Enter the full name of the well or project.

Enter the **STATE** and **COUNTY** where the well is located. For States that do not have counties, use the name of that State's equivalent jurisdiction at a more local level.

WELL LOCATION: Fill in the complete township, range, and section to the nearest quarter-quarter section. A township is north or south of the baseline, and a range is east or west of the principal meridian (e.g., T12N, R34W). Also include the distance, in feet, from the nearest north or south line and nearest east or west line of the quarter-section. Also, enter the **latitude** and **longitude** of the well in decimal degrees, to five or six places if possible; be sure to include a negative sign for the longitude of a well in the Western Hemisphere and a negative sign for the latitude of a well in the Southern Hemisphere.

Enter the **WELL CLASS,** i.e., the class of injection well as defined in 40 CFR 144.6.

TIMING OF THE ACTION: Check ***Notice prior to work*** if the activity has not yet occurred (i.e., is planned). Check ***Report after work*** if the activity described has already occurred. As appropriate, include the date the activity is expected to start or the date the activity was completed. (Note this may not be available, e.g., for a plugging plan submitted with a permit application.)

TYPE OF ACTION: Check the appropriate box to describe the kind of activity being reported. Check ***Well Rework*** for work that was/will be performed on the well after it has already been in operation as an injection well. Check ***Plugging and Abandonment*** to report on plans for or descriptions of final closure/plugging after use as an injection well. Check ***Conversion to a Non-Injection Well*** if the well is to be converted to something other than an injection well.

Provide a **NARRATIVE DESCRIPTION** of the work planned to be performed, or that was performed. The narrative should include a description of the main procedures planned or that occurred during the work activity. A service company report, daily report, or similar document may be attached if it includes all the requested information and is clear and legible.

For well reworks, include the following information: The reason for the well rework; depths of activity; type of activity; changes to injection well configuration, well casing, or cement behind casing; any plug added to the well and its depth; any newly drilled interval and its depth; method(s) to demonstrate that the well has mechanical integrity (as applicable); and any deviations from the approved rework plan (as applicable).

For a well plugging plan, include the following information: Reason for the well plugging; number of plugs placed, and their depths; materials used as plugs (e.g., cast iron bridge plug, cement, cement retainer); method to set plugs; and wait-on-cement times, if any. Also provide one or more cost estimates from an independent firm in the business of plugging and abandoning wells to plug the well as described in the plan.

For well plugging affidavit, include the following information: Reason for the well plugging; number of plugs placed, and their depths; materials used as plugs (e.g., cast iron bridge plug, cement, cement retainer); method to set plugs; wait-on-cement times, if any; and any deviations from the approved plugging plan (if applicable).

For conversion to a non-injection well, include the following information: Depths of activity; type of activity; changes to injection well configuration, well casing, or cement behind casing; any plug added to the well and its depth; any newly drilled interval and its depth; depths of new perforations; and method(s) to demonstrate that the well has mechanical integrity (as applicable).

For all of the above activities, include a well sketch depicting the work, results of well tests/logging performed, service company tickets, and any other available information demonstrating how the work was/is to be performed. Also, specify whether depths are below ground surface, relative to Kelly bushing, etc.

CERTIFICATION: This form must be signed and dated by either: a responsible corporate officer for a corporation, by a general partner for a partnership, by the proprietor of a sole proprietorship, or by a principal executive or ranking elected official for a public agency.

PAPERWORK REDUCTION ACT NOTICE: The public reporting and recordkeeping burden for this collection of information is estimated to average between 6.0 and 7.9 hours per response, depending on the injection well class. Burden means the total time, effort, or financial resource expended by persons to generate, maintain, retain, or disclose or provide information to or for a Federal Agency. This includes the time needed to review instructions; develop, acquire, install, and utilize technology and systems for the purposes of collecting, validating, and verifying information, processing and maintaining information, and disclosing and providing information; adjust the existing ways to comply with any previously applicable instructions and requirements; train personnel to be able to respond to the collection of information; search data sources; complete and review the collection of information; and, transmit or otherwise disclose the information. An agency may not conduct or sponsor, and a person is not required to respond to, a collection of information unless it displays a currently valid OMB control number. Send comments on the Agency's need for this information, the accuracy of the provided burden estimates, and any suggested methods for minimizing respondent burden, including the use of automated collection techniques to Director, Collection Strategies Division, U.S. Environmental Protection Agency (2822), 1200 Pennsylvania Ave., NW., Washington, D.C. 20460. Include the OMB control number in any correspondence. Do not send the completed forms to this address.

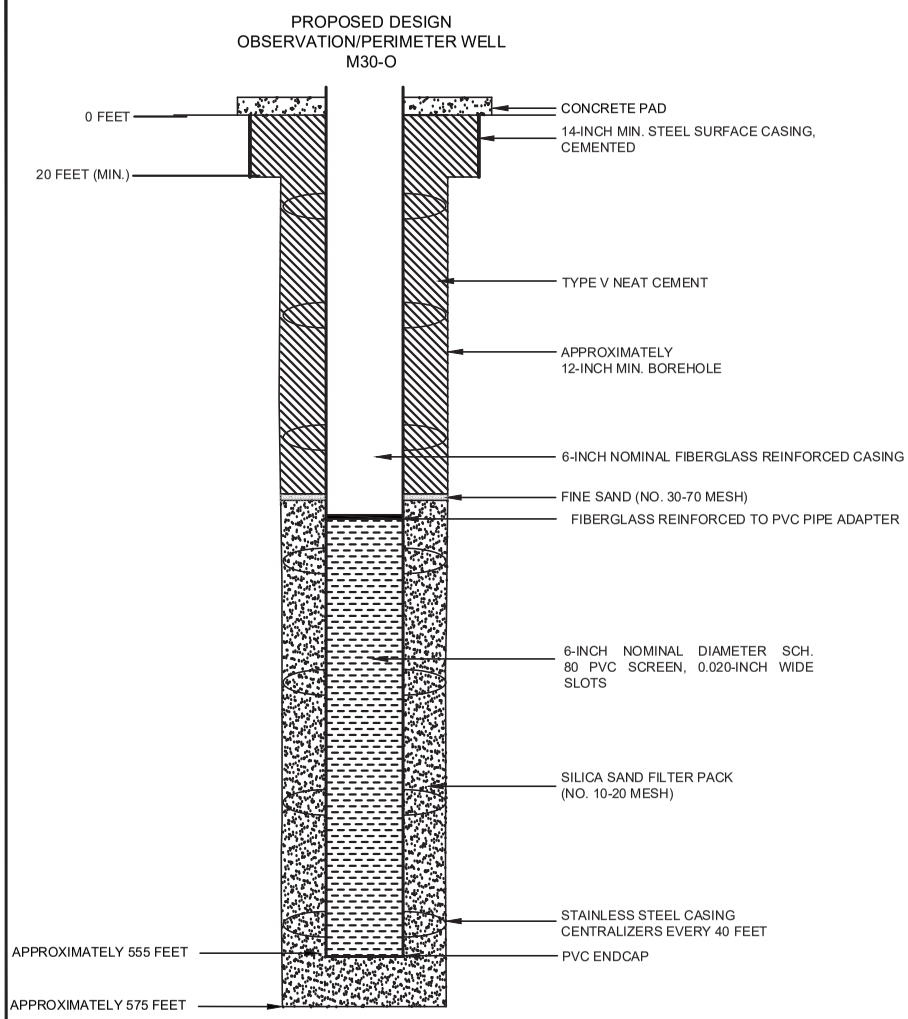

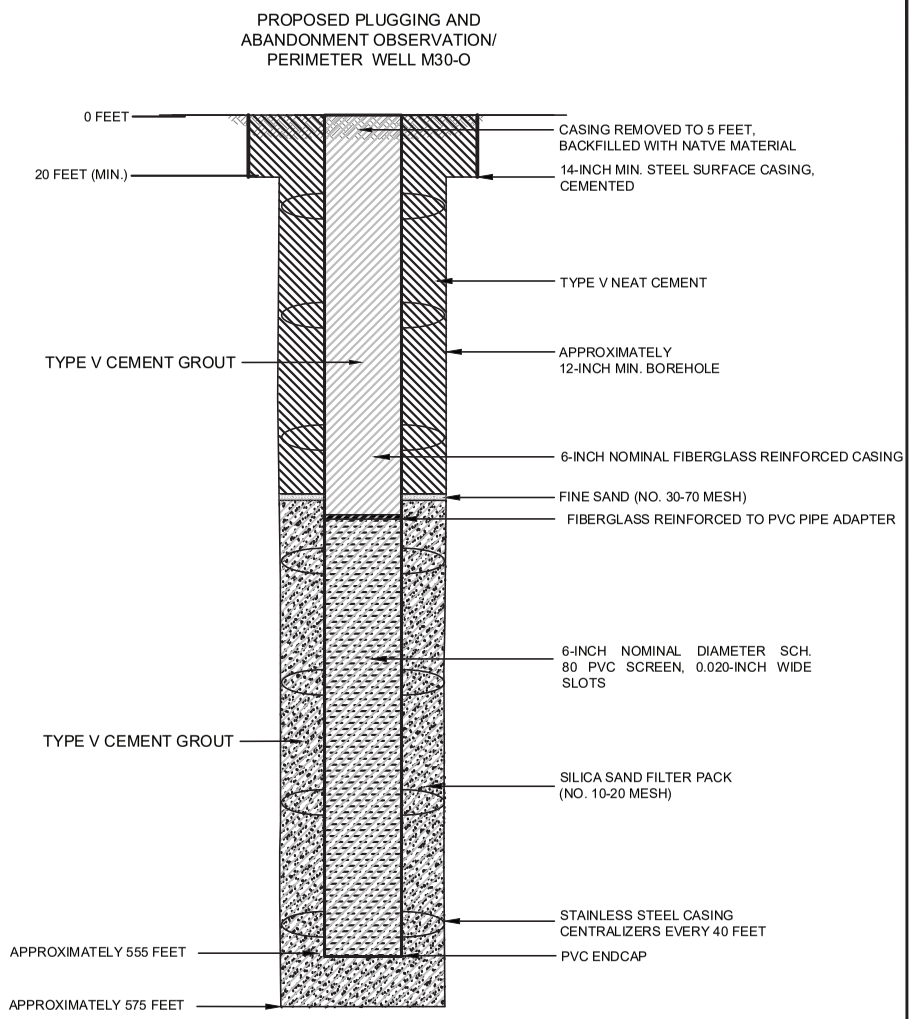

NOTES

1. WELL DESIGN DETAILS ARE BASED ON CORE HOLE AND WELL LOG RECORDS.

HALEY ALDRICH

FLORENCE COPPER, INC.
FLORENCE, ARIZONA

ABANDONMENT SCHEMATIC
OBSERVATION/PERIMETER
WELL M30-O

SEPTEMBER 2019
SCALE: AS SHOWN

FIGURE 1

OMB No. 2040-0042 Approval Expires 4/30/2022

United States Environmental Protection Agency

WELL REWORK RECORD, PLUGGING AND ABANDONMENT PLAN, OR PLUGGING AND ABANDONMENT AFFIDAVIT

Name and Address, Phone Number and/or Email of Permittee

Florence Copper Project
1575 W Hunt Hwy,
Florence, AZ 85132

Permit or EPA ID Number	API Number	Full Well Name
R9UIC-AZ3-FY11-1		M31-LBF

State	County
Arizona	Pinal

Locate well in two directions from nearest lines of quarter section and drilling unit

Latitude 33.05353792

Surface Location

SW **1/4 of** NE **1/4 of Section** 28 **Township** 4S **Range** 9E

Longitude -111.4271741

_____ **ft. from (N/S)** _____ **Line of quarter section**

_____ **ft. from (E/W)** _____ **Line of quarter section.**

Well Class	Timing of Action (pick one)	Type of Action (pick one)
☐ Class I ☐ Class II ☑ Class III ☐ Class V	☑ Notice Prior to Work Date Expected to Commence March 2021 ☐ Report After Work Date Work Ended	☐ Well Rework ☑ Plugging and Abandonment ☐ Conversion to a Non-Injection Well

Provide a narrative description of the work planned to be performed, or that was performed. Use additional pages as necessary. See instructions.

A workover rig capable of performing the required abandonment operations at the required depths will be moved in and set up over the well. The well casing will be inspected to determine the depth to which the well remains open and if any obstructions are present in the casing; the presence and condition of any existing surface casing will also be documented. If necessary, the well casing will be cleaned out to the bottom of the deepest screen or perforation to enable placement of cement seals.

If surface casing is present, an attempt will be made to remove it. If removal of the surface casing is not feasible, it will be left in the hole and perforated as needed to allow an annular seal to be placed to a depth of at least 25 feet bgs. In areas of agricultural use, the surface casing will be cut at least 5 feet bgs and removed.

If the surface casing cannot be removed, it will be perforated from at least 20 feet below the bedrock-LBFU contact to at least 20 feet above the contact; from at least 20 feet below the base of the MFGU to at least 20 feet above the top of the MFGU; and from at least 25 feet bgs to 5 feet bgs.

A tremie pipe will be used to place Type V cement in the open well from the bottom of the well casing to the top of the well casing. Cement retainers, as described above, will be used to force cement grout into the annulus and behind perforated screen intervals, as necessary.

If the well casing has been obstructed, as much cement as possible will be placed from 100 feet below the LBFU-bedrock contact to the top of the casing.

The volume of Type V cement will be recorded and will not be less than the estimated volume of material required to fill each interval. All cement grout will consist of Type V cement, or equivalent approved in accordance with the UIC Permit.

Certification

I certify under the penalty of law that I have personally examined and am familiar with the information submitted in this document and all attachments and that, based on my inquiry of those individuals immediately responsible for obtaining the information, I believe that the information is true, accurate, and complete. I am aware that there are significant penalties for submitting false information, including the possibliity of fine and imprisonment. (Ref. 40 CFR § 144.32)

Name and Official Title *(Please type or print)*	Signature	Date Signed
Dan Johnson, VP - General Manager		10/3/2019

INSTRUCTIONS FOR FORM 7520-19

This form replaces forms 7520-12 and 7520-14. Use this form only when work is planned or has occurred that affects the well's construction or operation as an injection well, including work on the casing, tubing or packer (or for shallow Class V wells, the subsurface fluid emplacement network). Use one form per injection well. While reports or other information developed by contractors or service companies may be attached, this form must be signed by a responsible entity as described at 40 CFR 144.32. Note: operators closing Class V wells should use Form 7520-17.

NAME, ADDRESS, PHONE AND/OR EMAIL OF PERMITTEE: Enter the name and street address, city/town, state, and ZIP code of the permittee. Also provide an email address (if available) and/or a phone number.

PERMIT OR EPA ID NUMBER: Enter the well identification number or permit number assigned to the well by the EPA or the permitting authority.

API NUMBER: Enter the number assigned by the local jurisdiction (usually a State Oil and Gas Agency) using the American Petroleum Institute standard numbering system.

FULL WELL NAME: Enter the full name of the well or project.

Enter the **STATE** and **COUNTY** where the well is located. For States that do not have counties, use the name of that State's equivalent jurisdiction at a more local level.

WELL LOCATION: Fill in the complete township, range, and section to the nearest quarter-quarter section. A township is north or south of the baseline, and a range is east or west of the principal meridian (e.g., T12N, R34W). Also include the distance, in feet, from the nearest north or south line and nearest east or west line of the quarter-section. Also, enter the **latitude** and **longitude** of the well in decimal degrees, to five or six places if possible; be sure to include a negative sign for the longitude of a well in the Western Hemisphere and a negative sign for the latitude of a well in the Southern Hemisphere.

Enter the **WELL CLASS,** i.e., the class of injection well as defined in 40 CFR 144.6.

TIMING OF THE ACTION: Check ***Notice prior to work*** if the activity has not yet occurred (i.e., is planned). Check ***Report after work*** if the activity described has already occurred. As appropriate, include the date the activity is expected to start or the date the activity was completed. (Note this may not be available, e.g., for a plugging plan submitted with a permit application.)

TYPE OF ACTION: Check the appropriate box to describe the kind of activity being reported. Check ***Well Rework*** for work that was/will be performed on the well after it has already been in operation as an injection well. Check ***Plugging and Abandonment*** to report on plans for or descriptions of final closure/plugging after use as an injection well. Check ***Conversion to a Non-Injection Well*** if the well is to be converted to something other than an injection well.

Provide a **NARRATIVE DESCRIPTION** of the work planned to be performed, or that was performed. The narrative should include a description of the main procedures planned or that occurred during the work activity. A service company report, daily report, or similar document may be attached if it includes all the requested information and is clear and legible.

For well reworks, include the following information: The reason for the well rework; depths of activity; type of activity; changes to injection well configuration, well casing, or cement behind casing; any plug added to the well and its depth; any newly drilled interval and its depth; method(s) to demonstrate that the well has mechanical integrity (as applicable); and any deviations from the approved rework plan (as applicable).

For a well plugging plan, include the following information: Reason for the well plugging; number of plugs placed, and their depths; materials used as plugs (e.g., cast iron bridge plug, cement, cement retainer); method to set plugs; and wait-on-cement times, if any. Also provide one or more cost estimates from an independent firm in the business of plugging and abandoning wells to plug the well as described in the plan.

For well plugging affidavit, include the following information: Reason for the well plugging; number of plugs placed, and their depths; materials used as plugs (e.g., cast iron bridge plug, cement, cement retainer); method to set plugs; wait-on-cement times, if any; and any deviations from the approved plugging plan (if applicable).

For conversion to a non-injection well, include the following information: Depths of activity; type of activity; changes to injection well configuration, well casing, or cement behind casing; any plug added to the well and its depth; any newly drilled interval and its depth; depths of new perforations; and method(s) to demonstrate that the well has mechanical integrity (as applicable).

For all of the above activities, include a well sketch depicting the work, results of well tests/logging performed, service company tickets, and any other available information demonstrating how the work was/is to be performed. Also, specify whether depths are below ground surface, relative to Kelly bushing, etc.

CERTIFICATION: This form must be signed and dated by either: a responsible corporate officer for a corporation, by a general partner for a partnership, by the proprietor of a sole proprietorship, or by a principal executive or ranking elected official for a public agency.

PAPERWORK REDUCTION ACT NOTICE: The public reporting and recordkeeping burden for this collection of information is estimated to average between 6.0 and 7.9 hours per response, depending on the injection well class. Burden means the total time, effort, or financial resource expended by persons to generate, maintain, retain, or disclose or provide information to or for a Federal Agency. This includes the time needed to review instructions; develop, acquire, install, and utilize technology and systems for the purposes of collecting, validating, and verifying information, processing and maintaining information, and disclosing and providing information; adjust the existing ways to comply with any previously applicable instructions and requirements; train personnel to be able to respond to the collection of information; search data sources; complete and review the collection of information; and, transmit or otherwise disclose the information. An agency may not conduct or sponsor, and a person is not required to respond to, a collection of information unless it displays a currently valid OMB control number. Send comments on the Agency's need for this information, the accuracy of the provided burden estimates, and any suggested methods for minimizing respondent burden, including the use of automated collection techniques to Director, Collection Strategies Division, U.S. Environmental Protection Agency (2822), 1200 Pennsylvania Ave., NW., Washington, D.C. 20460. Include the OMB control number in any correspondence. Do not send the completed forms to this address.

PROPOSED DESIGN
OBSERVATION/PERIMETER WELL
M31-LBF

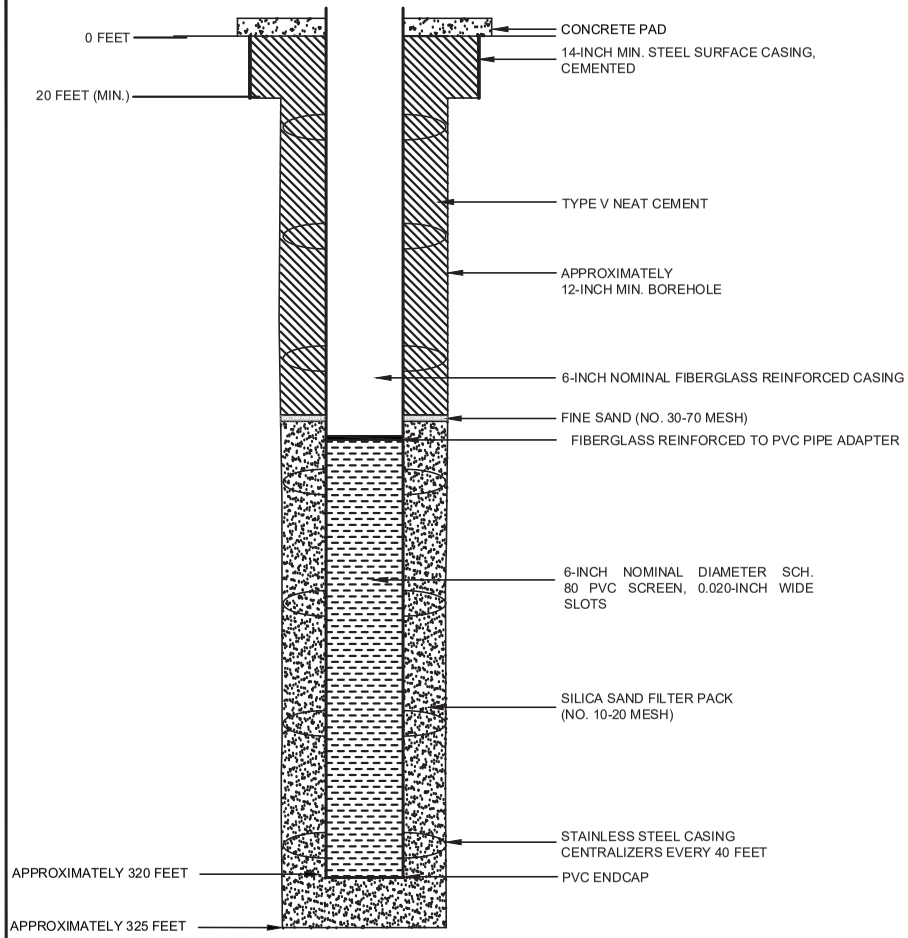

PROPOSED PLUGGING AND
ABANDONMENT OBSERVATION/
PERIMETER WELL M31-LBF

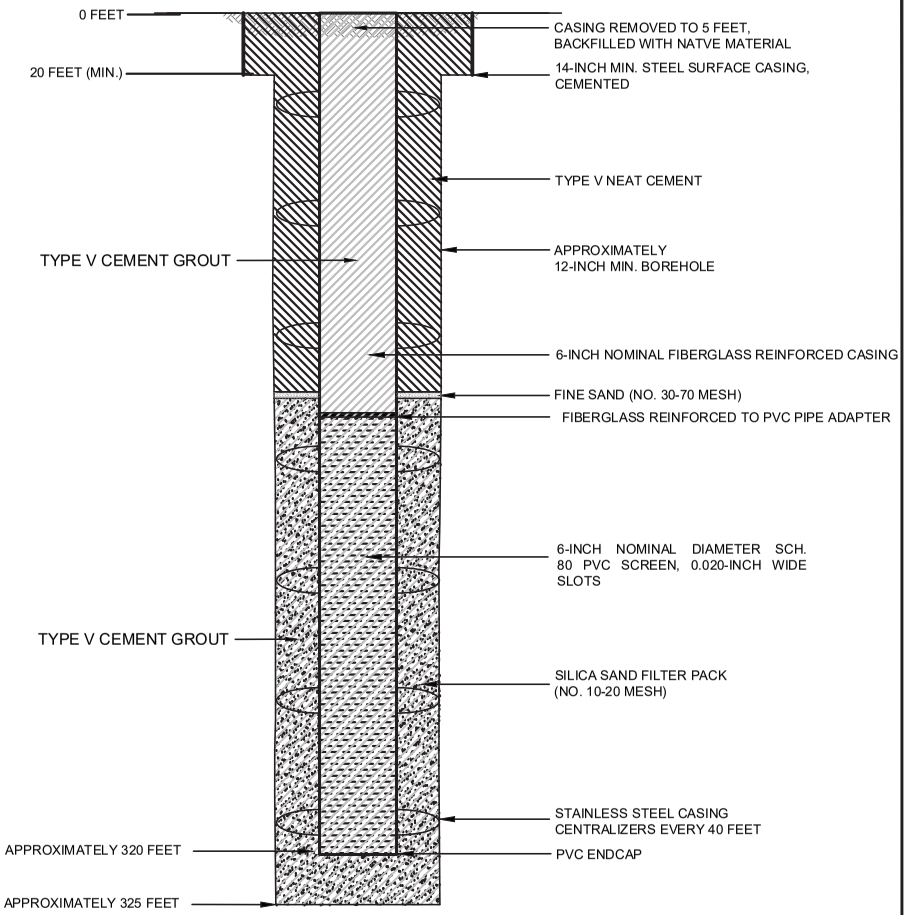

NOTES

1. WELL DESIGN DETAILS ARE BASED ON CORE HOLE AND WELL LOG RECORDS.

HALEY ALDRICH

FLORENCE COPPER, INC.
FLORENCE, ARIZONA

ABANDONMENT SCHEMATIC
OBSERVATION/PERIMETER
WELL M31-LBF

SEPTEMBER 2019
SCALE: AS SHOWN

FIGURE 1

OMB No. 2040-0042 Approval Expires 4/30/2022

United States Environmental Protection Agency

EPA

WELL REWORK RECORD, PLUGGING AND ABANDONMENT PLAN, OR PLUGGING AND ABANDONMENT AFFIDAVIT

Name and Address, Phone Number and/or Email of Permittee

Florence Copper Project
1575 W Hunt Hwy,
Florence, AZ 85132

Permit or EPA ID Number	API Number	Full Well Name
R9UIC-AZ3-FY11-1		M32-UBF

State	County
Arizona	Pinal

Locate well in two directions from nearest lines of quarter section and drilling unit

Latitude 33.05099515

Surface Location

NE **1/4 of** SE **1/4 of Section** 28 **Township** 4S **Range** 9E

Longitude -111.4223581

_____ **ft. from (N/S)** _____ **Line of quarter section**

_____ **ft. from (E/W)** _____ **Line of quarter section.**

Well Class	Timing of Action (pick one)	Type of Action (pick one)
☐ Class I ☐ Class II ☑ Class III ☐ Class V	☑ Notice Prior to Work Date Expected to Commence March 2021 ☐ Report After Work Date Work Ended	☐ Well Rework ☑ Plugging and Abandonment ☐ Conversion to a Non-Injection Well

Provide a narrative description of the work planned to be performed, or that was performed. Use additional pages as necessary. See instructions.

A workover rig capable of performing the required abandonment operations at the required depths will be moved in and set up over the well. The well casing will be inspected to determine the depth to which the well remains open and if any obstructions are present in the casing; the presence and condition of any existing surface casing will also be documented. If necessary, the well casing will be cleaned out to the bottom of the deepest screen or perforation to enable placement of cement seals.

If surface casing is present, an attempt will be made to remove it. If removal of the surface casing is not feasible, it will be left in the hole and perforated as needed to allow an annular seal to be placed to a depth of at least 25 feet bgs. In areas of agricultural use, the surface casing will be cut at least 5 feet bgs and removed.

If the surface casing cannot be removed, it will be perforated from at least 20 feet below the bedrock-LBFU contact to at least 20 feet above the contact; from at least 20 feet below the base of the MFGU to at least 20 feet above the top of the MFGU; and from at least 25 feet bgs to 5 feet bgs.

A tremie pipe will be used to place Type V cement in the open well from the bottom of the well casing to the top of the well casing. Cement retainers, as described above, will be used to force cement grout into the annulus and behind perforated screen intervals, as necessary.

If the well casing has been obstructed, as much cement as possible will be placed from 100 feet below the LBFU-bedrock contact to the top of the casing.

The volume of Type V cement will be recorded and will not be less than the estimated volume of material required to fill each interval. All cement grout will consist of Type V cement, or equivalent approved in accordance with the UIC Permit.

Certification

I certify under the penalty of law that I have personally examined and am familiar with the information submitted in this document and all attachments and that, based on my inquiry of those individuals immediately responsible for obtaining the information, I believe that the information is true, accurate, and complete. I am aware that there are significant penalties for submitting false information, including the possibliity of fine and imprisonment. (Ref. 40 CFR § 144.32)

Name and Official Title *(Please type or print)*	Signature	Date Signed
Dan Johnson, VP - General Manager		10/3/2019

INSTRUCTIONS FOR FORM 7520-19

This form replaces forms 7520-12 and 7520-14. Use this form only when work is planned or has occurred that affects the well's construction or operation as an injection well, including work on the casing, tubing or packer (or for shallow Class V wells, the subsurface fluid emplacement network). Use one form per injection well. While reports or other information developed by contractors or service companies may be attached, this form must be signed by a responsible entity as described at 40 CFR 144.32. Note: operators closing Class V wells should use Form 7520-17.

NAME, ADDRESS, PHONE AND/OR EMAIL OF PERMITTEE: Enter the name and street address, city/town, state, and ZIP code of the permittee. Also provide an email address (if available) and/or a phone number.

PERMIT OR EPA ID NUMBER: Enter the well identification number or permit number assigned to the well by the EPA or the permitting authority.

API NUMBER: Enter the number assigned by the local jurisdiction (usually a State Oil and Gas Agency) using the American Petroleum Institute standard numbering system.

FULL WELL NAME: Enter the full name of the well or project.

Enter the **STATE** and **COUNTY** where the well is located. For States that do not have counties, use the name of that State's equivalent jurisdiction at a more local level.

WELL LOCATION: Fill in the complete township, range, and section to the nearest quarter-quarter section. A township is north or south of the baseline, and a range is east or west of the principal meridian (e.g., T12N, R34W). Also include the distance, in feet, from the nearest north or south line and nearest east or west line of the quarter-section. Also, enter the **latitude** and **longitude** of the well in decimal degrees, to five or six places if possible; be sure to include a negative sign for the longitude of a well in the Western Hemisphere and a negative sign for the latitude of a well in the Southern Hemisphere.

Enter the **WELL CLASS,** i.e., the class of injection well as defined in 40 CFR 144.6.

TIMING OF THE ACTION: Check ***Notice prior to work*** if the activity has not yet occurred (i.e., is planned). Check ***Report after work*** if the activity described has already occurred. As appropriate, include the date the activity is expected to start or the date the activity was completed. (Note this may not be available, e.g., for a plugging plan submitted with a permit application.)

TYPE OF ACTION: Check the appropriate box to describe the kind of activity being reported. Check ***Well Rework*** for work that was/will be performed on the well after it has already been in operation as an injection well. Check ***Plugging and Abandonment*** to report on plans for or descriptions of final closure/plugging after use as an injection well. Check ***Conversion to a Non-Injection Well*** if the well is to be converted to something other than an injection well.

Provide a **NARRATIVE DESCRIPTION** of the work planned to be performed, or that was performed. The narrative should include a description of the main procedures planned or that occurred during the work activity. A service company report, daily report, or similar document may be attached if it includes all the requested information and is clear and legible.

For well reworks, include the following information: The reason for the well rework; depths of activity; type of activity; changes to injection well configuration, well casing, or cement behind casing; any plug added to the well and its depth; any newly drilled interval and its depth; method(s) to demonstrate that the well has mechanical integrity (as applicable); and any deviations from the approved rework plan (as applicable).

For a well plugging plan, include the following information: Reason for the well plugging; number of plugs placed, and their depths; materials used as plugs (e.g., cast iron bridge plug, cement, cement retainer); method to set plugs; and wait-on-cement times, if any. Also provide one or more cost estimates from an independent firm in the business of plugging and abandoning wells to plug the well as described in the plan.

For well plugging affidavit, include the following information: Reason for the well plugging; number of plugs placed, and their depths; materials used as plugs (e.g., cast iron bridge plug, cement, cement retainer); method to set plugs; wait-on-cement times, if any; and any deviations from the approved plugging plan (if applicable).

For conversion to a non-injection well, include the following information: Depths of activity; type of activity; changes to injection well configuration, well casing, or cement behind casing; any plug added to the well and its depth; any newly drilled interval and its depth; depths of new perforations; and method(s) to demonstrate that the well has mechanical integrity (as applicable).

For all of the above activities, include a well sketch depicting the work, results of well tests/logging performed, service company tickets, and any other available information demonstrating how the work was/is to be performed. Also, specify whether depths are below ground surface, relative to Kelly bushing, etc.

CERTIFICATION: This form must be signed and dated by either: a responsible corporate officer for a corporation, by a general partner for a partnership, by the proprietor of a sole proprietorship, or by a principal executive or ranking elected official for a public agency.

PAPERWORK REDUCTION ACT NOTICE: The public reporting and recordkeeping burden for this collection of information is estimated to average between 6.0 and 7.9 hours per response, depending on the injection well class. Burden means the total time, effort, or financial resource expended by persons to generate, maintain, retain, or disclose or provide information to or for a Federal Agency. This includes the time needed to review instructions; develop, acquire, install, and utilize technology and systems for the purposes of collecting, validating, and verifying information, processing and maintaining information, and disclosing and providing information; adjust the existing ways to comply with any previously applicable instructions and requirements; train personnel to be able to respond to the collection of information; search data sources; complete and review the collection of information; and, transmit or otherwise disclose the information. An agency may not conduct or sponsor, and a person is not required to respond to, a collection of information unless it displays a currently valid OMB control number. Send comments on the Agency's need for this information, the accuracy of the provided burden estimates, and any suggested methods for minimizing respondent burden, including the use of automated collection techniques to Director, Collection Strategies Division, U.S. Environmental Protection Agency (2822), 1200 Pennsylvania Ave., NW., Washington, D.C. 20460. Include the OMB control number in any correspondence. Do not send the completed forms to this address.

PROPOSED DESIGN
OBSERVATION/PERIMETER WELL
M32-UBF

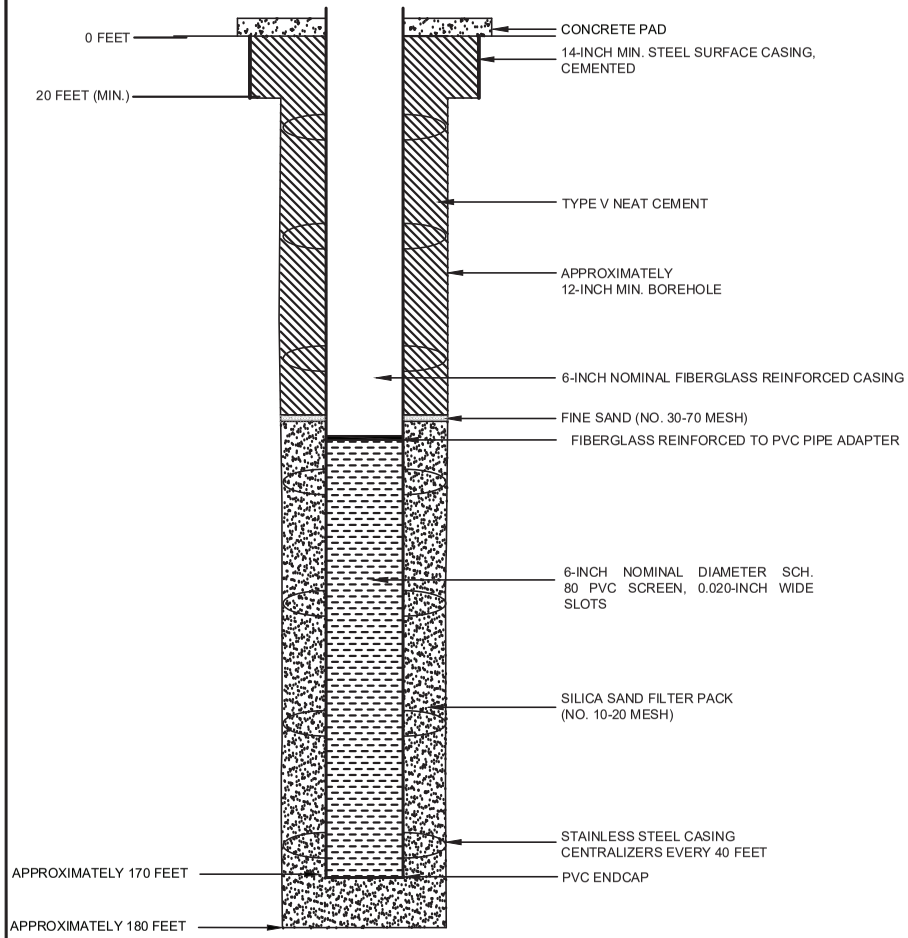

PROPOSED PLUGGING AND
ABANDONMENT OBSERVATION/
PERIMETER WELL M32-UBF

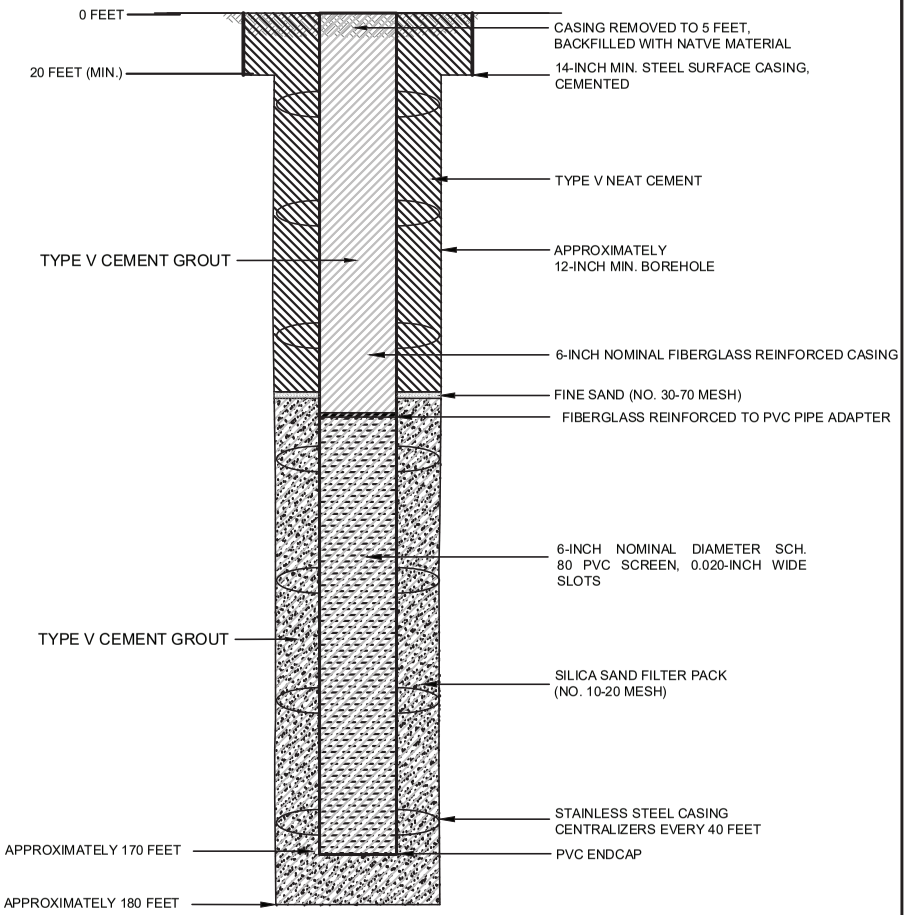

NOTES

1. WELL DESIGN DETAILS ARE BASED ON CORE HOLE AND WELL LOG RECORDS.

HALEY ALDRICH

FLORENCE COPPER, INC.
FLORENCE, ARIZONA

ABANDONMENT SCHEMATIC
OBSERVATION/PERIMETER
WELL M32-UBF

SEPTEMBER 2019
SCALE: AS SHOWN

FIGURE 1

OMB No. 2040-0042 Approval Expires 4/30/2022

United States Environmental Protection Agency

WELL REWORK RECORD, PLUGGING AND ABANDONMENT PLAN, OR PLUGGING AND ABANDONMENT AFFIDAVIT

Name and Address, Phone Number and/or Email of Permittee

Florence Copper Project
1575 W Hunt Hwy,
Florence, AZ 85132

Permit or EPA ID Number	API Number	Full Well Name
R9UIC-AZ3-FY11-1		M33-UBF

State	County
Arizona	Pinal

Locate well in two directions from nearest lines of quarter section and drilling unit

Surface Location

SW 1/4 of NW 1/4 of Section 27 Township 4S Range 9E

Latitude 33.05392427

Longitude -111.418469

ft. from (N/S) Line of quarter section

ft. from (E/W) Line of quarter section.

Well Class	Timing of Action (pick one)	Type of Action (pick one)
☐ Class I ☐ Class II ☑ Class III ☐ Class V	☑ Notice Prior to Work Date Expected to Commence March 2021 ☐ Report After Work Date Work Ended	☐ Well Rework ☑ Plugging and Abandonment ☐ Conversion to a Non-Injection Well

Provide a narrative description of the work planned to be performed, or that was performed. Use additional pages as necessary. See instructions.

A workover rig capable of performing the required abandonment operations at the required depths will be moved in and set up over the well. The well casing will be inspected to determine the depth to which the well remains open and if any obstructions are present in the casing; the presence and condition of any existing surface casing will also be documented. If necessary, the well casing will be cleaned out to the bottom of the deepest screen or perforation to enable placement of cement seals.

If surface casing is present, an attempt will be made to remove it. If removal of the surface casing is not feasible, it will be left in the hole and perforated as needed to allow an annular seal to be placed to a depth of at least 25 feet bgs. In areas of agricultural use, the surface casing will be cut at least 5 feet bgs and removed.

If the surface casing cannot be removed, it will be perforated from at least 20 feet below the bedrock-LBFU contact to at least 20 feet above the contact; from at least 20 feet below the base of the MFGU to at least 20 feet above the top of the MFGU; and from at least 25 feet bgs to 5 feet bgs.

A tremie pipe will be used to place Type V cement in the open well from the bottom of the well casing to the top of the well casing. Cement retainers, as described above, will be used to force cement grout into the annulus and behind perforated screen intervals, as necessary.

If the well casing has been obstructed, as much cement as possible will be placed from 100 feet below the LBFU-bedrock contact to the top of the casing.

The volume of Type V cement will be recorded and will not be less than the estimated volume of material required to fill each interval. All cement grout will consist of Type V cement, or equivalent approved in accordance with the UIC Permit.

Certification

I certify under the penalty of law that I have personally examined and am familiar with the information submitted in this document and all attachments and that, based on my inquiry of those individuals immediately responsible for obtaining the information, I believe that the information is true, accurate, and complete. I am aware that there are significant penalties for submitting false information, including the possibliity of fine and imprisonment. (Ref. 40 CFR § 144.32)

Name and Official Title *(Please type or print)*	Signature	Date Signed
Dan Johnson, VP - General Manager		10/3/2019

INSTRUCTIONS FOR FORM 7520-19

This form replaces forms 7520-12 and 7520-14. Use this form only when work is planned or has occurred that affects the well's construction or operation as an injection well, including work on the casing, tubing or packer (or for shallow Class V wells, the subsurface fluid emplacement network). Use one form per injection well. While reports or other information developed by contractors or service companies may be attached, this form must be signed by a responsible entity as described at 40 CFR 144.32. Note: operators closing Class V wells should use Form 7520-17.

NAME, ADDRESS, PHONE AND/OR EMAIL OF PERMITTEE: Enter the name and street address, city/town, state, and ZIP code of the permittee. Also provide an email address (if available) and/or a phone number.

PERMIT OR EPA ID NUMBER: Enter the well identification number or permit number assigned to the well by the EPA or the permitting authority.

API NUMBER: Enter the number assigned by the local jurisdiction (usually a State Oil and Gas Agency) using the American Petroleum Institute standard numbering system.

FULL WELL NAME: Enter the full name of the well or project.

Enter the **STATE** and **COUNTY** where the well is located. For States that do not have counties, use the name of that State's equivalent jurisdiction at a more local level.

WELL LOCATION: Fill in the complete township, range, and section to the nearest quarter-quarter section. A township is north or south of the baseline, and a range is east or west of the principal meridian (e.g., T12N, R34W). Also include the distance, in feet, from the nearest north or south line and nearest east or west line of the quarter-section. Also, enter the **latitude** and **longitude** of the well in decimal degrees, to five or six places if possible; be sure to include a negative sign for the longitude of a well in the Western Hemisphere and a negative sign for the latitude of a well in the Southern Hemisphere.

Enter the **WELL CLASS,** i.e., the class of injection well as defined in 40 CFR 144.6.

TIMING OF THE ACTION: Check ***Notice prior to work*** if the activity has not yet occurred (i.e., is planned). Check ***Report after work*** if the activity described has already occurred. As appropriate, include the date the activity is expected to start or the date the activity was completed. (Note this may not be available, e.g., for a plugging plan submitted with a permit application.)

TYPE OF ACTION: Check the appropriate box to describe the kind of activity being reported. Check ***Well Rework*** for work that was/will be performed on the well after it has already been in operation as an injection well. Check ***Plugging and Abandonment*** to report on plans for or descriptions of final closure/plugging after use as an injection well. Check ***Conversion to a Non-Injection Well*** if the well is to be converted to something other than an injection well.

Provide a **NARRATIVE DESCRIPTION** of the work planned to be performed, or that was performed. The narrative should include a description of the main procedures planned or that occurred during the work activity. A service company report, daily report, or similar document may be attached if it includes all the requested information and is clear and legible.

For well reworks, include the following information: The reason for the well rework; depths of activity; type of activity; changes to injection well configuration, well casing, or cement behind casing; any plug added to the well and its depth; any newly drilled interval and its depth; method(s) to demonstrate that the well has mechanical integrity (as applicable); and any deviations from the approved rework plan (as applicable).

For a well plugging plan, include the following information: Reason for the well plugging; number of plugs placed, and their depths; materials used as plugs (e.g., cast iron bridge plug, cement, cement retainer); method to set plugs; and wait-on-cement times, if any. Also provide one or more cost estimates from an independent firm in the business of plugging and abandoning wells to plug the well as described in the plan.

For well plugging affidavit, include the following information: Reason for the well plugging; number of plugs placed, and their depths; materials used as plugs (e.g., cast iron bridge plug, cement, cement retainer); method to set plugs; wait-on-cement times, if any; and any deviations from the approved plugging plan (if applicable).

For conversion to a non-injection well, include the following information: Depths of activity; type of activity; changes to injection well configuration, well casing, or cement behind casing; any plug added to the well and its depth; any newly drilled interval and its depth; depths of new perforations; and method(s) to demonstrate that the well has mechanical integrity (as applicable).

For all of the above activities, include a well sketch depicting the work, results of well tests/logging performed, service company tickets, and any other available information demonstrating how the work was/is to be performed. Also, specify whether depths are below ground surface, relative to Kelly bushing, etc.

CERTIFICATION: This form must be signed and dated by either: a responsible corporate officer for a corporation, by a general partner for a partnership, by the proprietor of a sole proprietorship, or by a principal executive or ranking elected official for a public agency.

PAPERWORK REDUCTION ACT NOTICE: The public reporting and recordkeeping burden for this collection of information is estimated to average between 6.0 and 7.9 hours per response, depending on the injection well class. Burden means the total time, effort, or financial resource expended by persons to generate, maintain, retain, or disclose or provide information to or for a Federal Agency. This includes the time needed to review instructions; develop, acquire, install, and utilize technology and systems for the purposes of collecting, validating, and verifying information, processing and maintaining information, and disclosing and providing information; adjust the existing ways to comply with any previously applicable instructions and requirements; train personnel to be able to respond to the collection of information; search data sources; complete and review the collection of information; and, transmit or otherwise disclose the information. An agency may not conduct or sponsor, and a person is not required to respond to, a collection of information unless it displays a currently valid OMB control number. Send comments on the Agency's need for this information, the accuracy of the provided burden estimates, and any suggested methods for minimizing respondent burden, including the use of automated collection techniques to Director, Collection Strategies Division, U.S. Environmental Protection Agency (2822), 1200 Pennsylvania Ave., NW., Washington, D.C. 20460. Include the OMB control number in any correspondence. Do not send the completed forms to this address.

PROPOSED DESIGN
OBSERVATION/PERIMETER WELL
M33-UBF

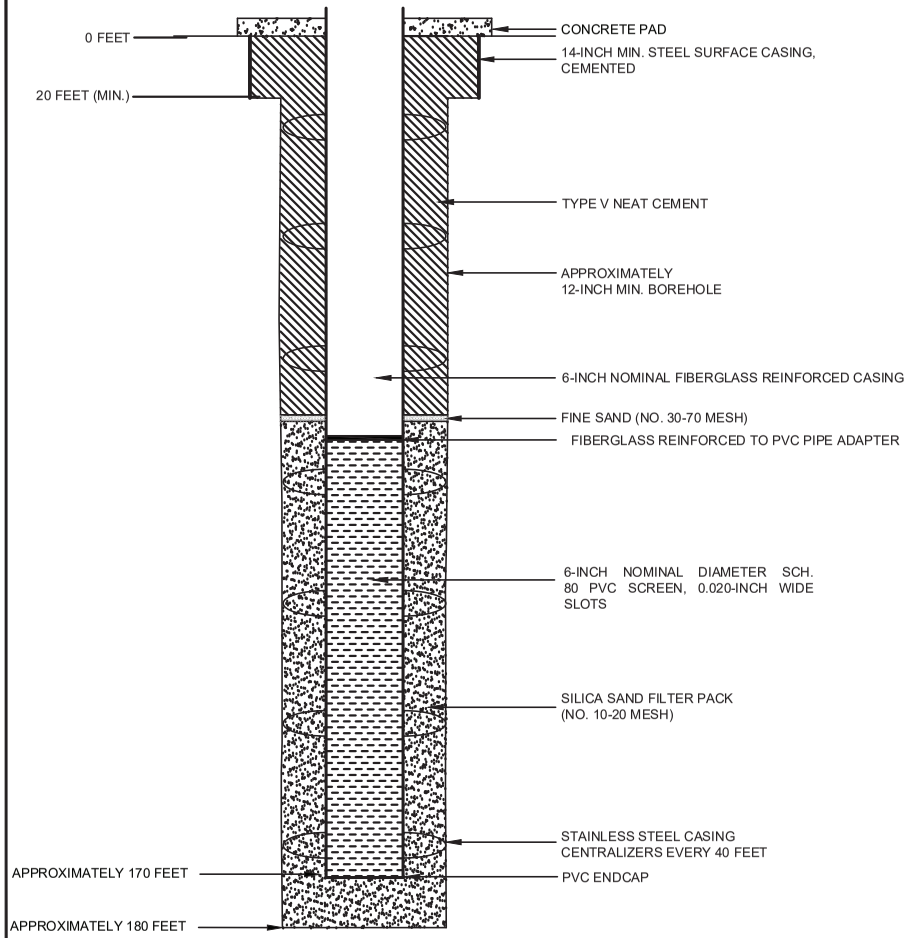

PROPOSED PLUGGING AND
ABANDONMENT OBSERVATION/
PERIMETER WELL M33-UBF

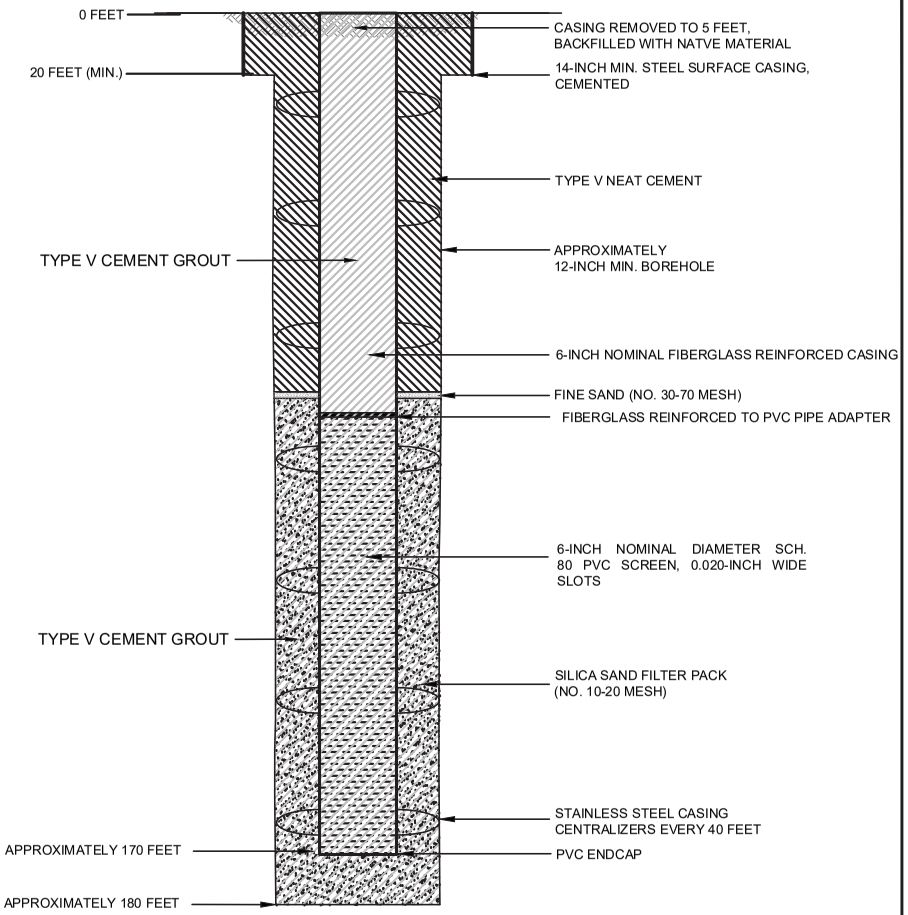

NOTES

1. WELL DESIGN DETAILS ARE BASED ON CORE HOLE AND WELL LOG RECORDS.

HALEY ALDRICH

FLORENCE COPPER, INC.
FLORENCE, ARIZONA

ABANDONMENT SCHEMATIC
OBSERVATION/PERIMETER
WELL M33-UBF

SEPTEMBER 2019
SCALE: AS SHOWN

FIGURE 1

OMB No. 2040-0042 Approval Expires 4/30/2022

United States Environmental Protection Agency

WELL REWORK RECORD, PLUGGING AND ABANDONMENT PLAN, OR PLUGGING AND ABANDONMENT AFFIDAVIT

Name and Address, Phone Number and/or Email of Permittee

Florence Copper Project
1575 W Hunt Hwy,
Florence, AZ 85132

Permit or EPA ID Number	API Number	Full Well Name
R9UIC-AZ3-FY11-1		O3-GL

State	County
Arizona	Pinal

Locate well in two directions from nearest lines of quarter section and drilling unit

Latitude 33.04835911

Surface Location

SE **1/4 of** SW **1/4 of Section** 28 **Township** 4S **Range** 9E

Longitude -111.4306507

_____ **ft. from (N/S)** _____ **Line of quarter section**

_____ **ft. from (E/W)** _____ **Line of quarter section.**

Well Class	Timing of Action (pick one)	Type of Action (pick one)
☐ Class I ☐ Class II ☑ Class III ☐ Class V	☑ Notice Prior to Work Date Expected to Commence March 2021 ☐ Report After Work Date Work Ended	☐ Well Rework ☑ Plugging and Abandonment ☐ Conversion to a Non-Injection Well

Provide a narrative description of the work planned to be performed, or that was performed. Use additional pages as necessary. See instructions.

A workover rig capable of performing the required abandonment operations at the required depths will be moved in and set up over the well. The well casing will be inspected to determine the depth to which the well remains open and if any obstructions are present in the casing; the presence and condition of any existing surface casing will also be documented. If necessary, the well casing will be cleaned out to the bottom of the deepest screen or perforation to enable placement of cement seals.

If surface casing is present, an attempt will be made to remove it. If removal of the surface casing is not feasible, it will be left in the hole and perforated as needed to allow an annular seal to be placed to a depth of at least 25 feet bgs. In areas of agricultural use, the surface casing will be cut at least 5 feet bgs and removed.

If the surface casing cannot be removed, it will be perforated from at least 20 feet below the bedrock-LBFU contact to at least 20 feet above the contact; from at least 20 feet below the base of the MFGU to at least 20 feet above the top of the MFGU; and from at least 25 feet bgs to 5 feet bgs.

A tremie pipe will be used to place Type V cement in the open well from the bottom of the well casing to the top of the well casing. Cement retainers, as described above, will be used to force cement grout into the annulus and behind perforated screen intervals, as necessary.

If the well casing has been obstructed, as much cement as possible will be placed from 100 feet below the LBFU-bedrock contact to the top of the casing.

The volume of Type V cement will be recorded and will not be less than the estimated volume of material required to fill each interval. All cement grout will consist of Type V cement, or equivalent approved in accordance with the UIC Permit.

Certification

I certify under the penalty of law that I have personally examined and am familiar with the information submitted in this document and all attachments and that, based on my inquiry of those individuals immediately responsible for obtaining the information, I believe that the information is true, accurate, and complete. I am aware that there are significant penalties for submitting false information, including the possibliity of fine and imprisonment. (Ref. 40 CFR § 144.32)

Name and Official Title *(Please type or print)*	Signature	Date Signed
Dan Johnson, VP - General Manager		10/3/2019

INSTRUCTIONS FOR FORM 7520-19

This form replaces forms 7520-12 and 7520-14. Use this form only when work is planned or has occurred that affects the well's construction or operation as an injection well, including work on the casing, tubing or packer (or for shallow Class V wells, the subsurface fluid emplacement network). Use one form per injection well. While reports or other information developed by contractors or service companies may be attached, this form must be signed by a responsible entity as described at 40 CFR 144.32. Note: operators closing Class V wells should use Form 7520-17.

NAME, ADDRESS, PHONE AND/OR EMAIL OF PERMITTEE: Enter the name and street address, city/town, state, and ZIP code of the permittee. Also provide an email address (if available) and/or a phone number.

PERMIT OR EPA ID NUMBER: Enter the well identification number or permit number assigned to the well by the EPA or the permitting authority.

API NUMBER: Enter the number assigned by the local jurisdiction (usually a State Oil and Gas Agency) using the American Petroleum Institute standard numbering system.

FULL WELL NAME: Enter the full name of the well or project.

Enter the **STATE** and **COUNTY** where the well is located. For States that do not have counties, use the name of that State's equivalent jurisdiction at a more local level.

WELL LOCATION: Fill in the complete township, range, and section to the nearest quarter-quarter section. A township is north or south of the baseline, and a range is east or west of the principal meridian (e.g., T12N, R34W). Also include the distance, in feet, from the nearest north or south line and nearest east or west line of the quarter-section. Also, enter the **latitude** and **longitude** of the well in decimal degrees, to five or six places if possible; be sure to include a negative sign for the longitude of a well in the Western Hemisphere and a negative sign for the latitude of a well in the Southern Hemisphere.

Enter the **WELL CLASS,** i.e., the class of injection well as defined in 40 CFR 144.6.

TIMING OF THE ACTION: Check ***Notice prior to work*** if the activity has not yet occurred (i.e., is planned). Check ***Report after work*** if the activity described has already occurred. As appropriate, include the date the activity is expected to start or the date the activity was completed. (Note this may not be available, e.g., for a plugging plan submitted with a permit application.)

TYPE OF ACTION: Check the appropriate box to describe the kind of activity being reported. Check ***Well Rework*** for work that was/will be performed on the well after it has already been in operation as an injection well. Check ***Plugging and Abandonment*** to report on plans for or descriptions of final closure/plugging after use as an injection well. Check ***Conversion to a Non-Injection Well*** if the well is to be converted to something other than an injection well.

Provide a **NARRATIVE DESCRIPTION** of the work planned to be performed, or that was performed. The narrative should include a description of the main procedures planned or that occurred during the work activity. A service company report, daily report, or similar document may be attached if it includes all the requested information and is clear and legible.

For well reworks, include the following information: The reason for the well rework; depths of activity; type of activity; changes to injection well configuration, well casing, or cement behind casing; any plug added to the well and its depth; any newly drilled interval and its depth; method(s) to demonstrate that the well has mechanical integrity (as applicable); and any deviations from the approved rework plan (as applicable).

For a well plugging plan, include the following information: Reason for the well plugging; number of plugs placed, and their depths; materials used as plugs (e.g., cast iron bridge plug, cement, cement retainer); method to set plugs; and wait-on-cement times, if any. Also provide one or more cost estimates from an independent firm in the business of plugging and abandoning wells to plug the well as described in the plan.

For well plugging affidavit, include the following information: Reason for the well plugging; number of plugs placed, and their depths; materials used as plugs (e.g., cast iron bridge plug, cement, cement retainer); method to set plugs; wait-on-cement times, if any; and any deviations from the approved plugging plan (if applicable).

For conversion to a non-injection well, include the following information: Depths of activity; type of activity; changes to injection well configuration, well casing, or cement behind casing; any plug added to the well and its depth; any newly drilled interval and its depth; depths of new perforations; and method(s) to demonstrate that the well has mechanical integrity (as applicable).

For all of the above activities, include a well sketch depicting the work, results of well tests/logging performed, service company tickets, and any other available information demonstrating how the work was/is to be performed. Also, specify whether depths are below ground surface, relative to Kelly bushing, etc.

CERTIFICATION: This form must be signed and dated by either: a responsible corporate officer for a corporation, by a general partner for a partnership, by the proprietor of a sole proprietorship, or by a principal executive or ranking elected official for a public agency.

PAPERWORK REDUCTION ACT NOTICE: The public reporting and recordkeeping burden for this collection of information is estimated to average between 6.0 and 7.9 hours per response, depending on the injection well class. Burden means the total time, effort, or financial resource expended by persons to generate, maintain, retain, or disclose or provide information to or for a Federal Agency. This includes the time needed to review instructions; develop, acquire, install, and utilize technology and systems for the purposes of collecting, validating, and verifying information, processing and maintaining information, and disclosing and providing information; adjust the existing ways to comply with any previously applicable instructions and requirements; train personnel to be able to respond to the collection of information; search data sources; complete and review the collection of information; and, transmit or otherwise disclose the information. An agency may not conduct or sponsor, and a person is not required to respond to, a collection of information unless it displays a currently valid OMB control number. Send comments on the Agency's need for this information, the accuracy of the provided burden estimates, and any suggested methods for minimizing respondent burden, including the use of automated collection techniques to Director, Collection Strategies Division, U.S. Environmental Protection Agency (2822), 1200 Pennsylvania Ave., NW., Washington, D.C. 20460. Include the OMB control number in any correspondence. Do not send the completed forms to this address.

PROPOSED DESIGN
OBSERVATION/PERIMETER WELL
O3-GL

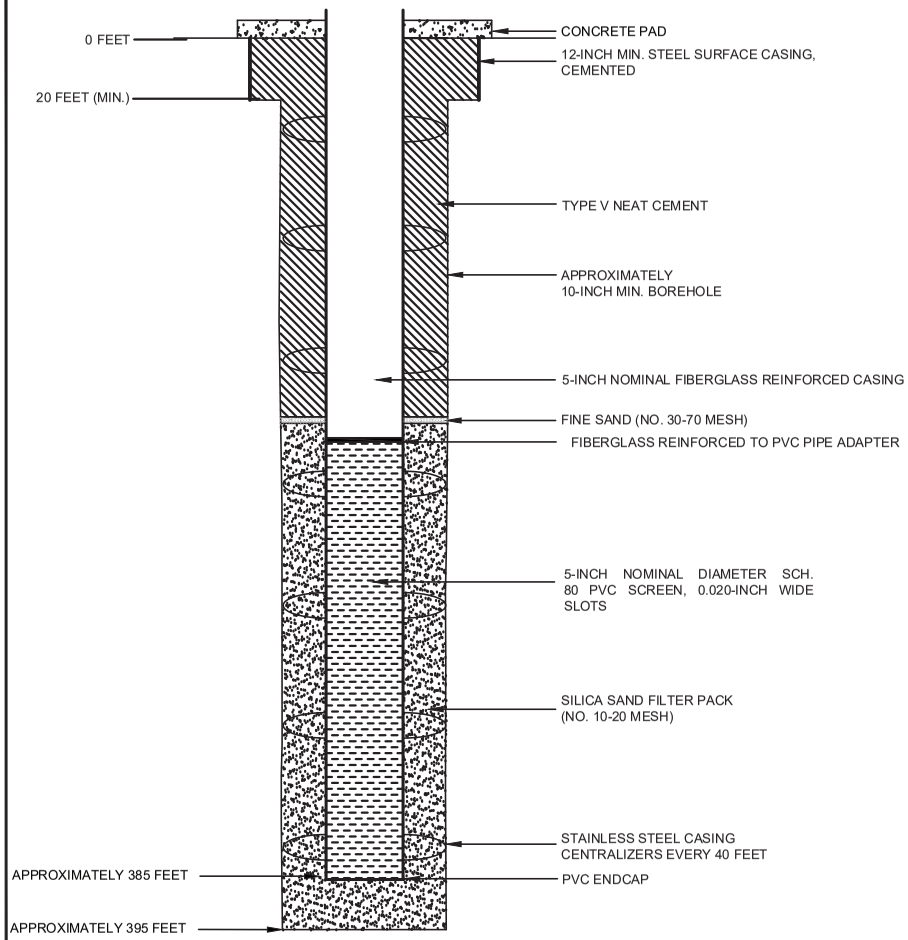

PROPOSED PLUGGING AND
ABANDONMENT OBSERVATION/
PERIMETER WELL O3-GL

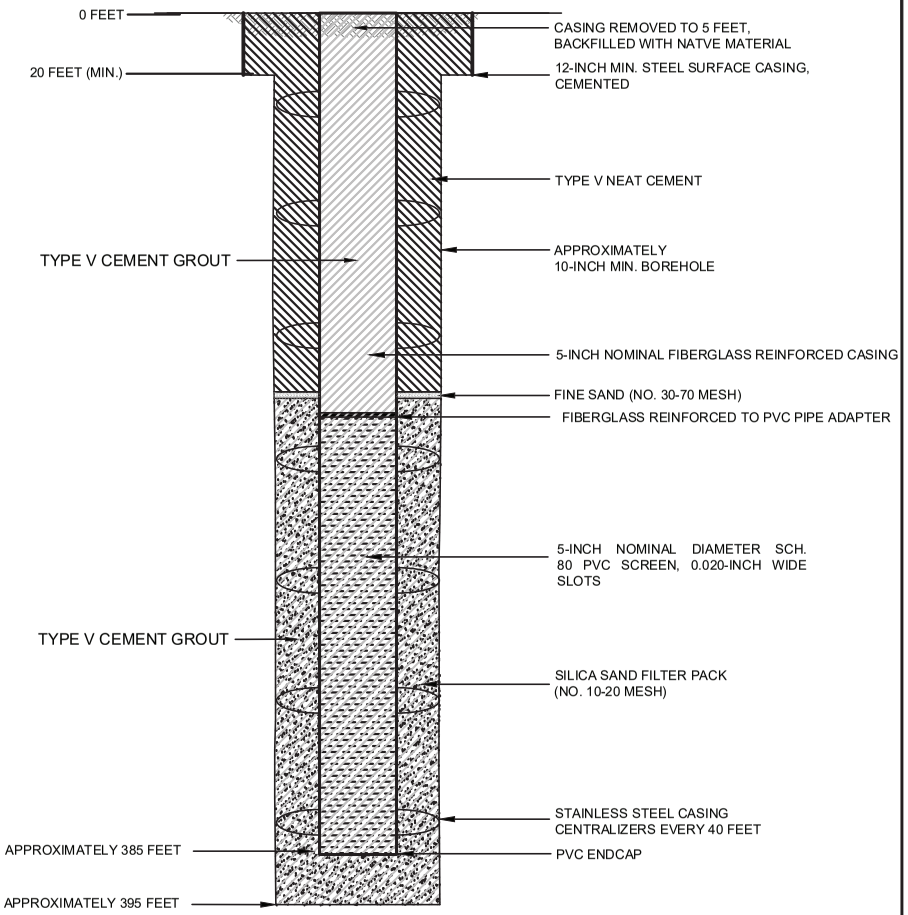

NOTES

1. WELL DESIGN DETAILS ARE BASED ON CORE HOLE AND WELL LOG RECORDS.

HALEY ALDRICH

FLORENCE COPPER, INC.
FLORENCE, ARIZONA

ABANDONMENT SCHEMATIC
OBSERVATION/PERIMETER
WELL O3-GL

SEPTEMBER 2019
SCALE: AS SHOWN

FIGURE 1

OMB No. 2040-0042 Approval Expires 4/30/2022

United States Environmental Protection Agency

WELL REWORK RECORD, PLUGGING AND ABANDONMENT PLAN, OR PLUGGING AND ABANDONMENT AFFIDAVIT

Name and Address, Phone Number and/or Email of Permittee

Florence Copper Project
1575 W Hunt Hwy,
Florence, AZ 85132

Permit or EPA ID Number	API Number	Full Well Name
R9UIC-AZ3-FY11-1		O5.1-O

State	County
Arizona	Pinal

Locate well in two directions from nearest lines of quarter section and drilling unit

Surface Location

SW 1/4 of SE 1/4 of Section 28 Township 4S Range 9E

Latitude 33.04632672

Longitude -111.4284512

_____ ft. from (N/S) _____ Line of quarter section

_____ ft. from (E/W) _____ Line of quarter section.

Well Class	Timing of Action (pick one)	Type of Action (pick one)
☐ Class I ☐ Class II ☑ Class III ☐ Class V	☑ Notice Prior to Work Date Expected to Commence March 2021 ☐ Report After Work Date Work Ended	☐ Well Rework ☑ Plugging and Abandonment ☐ Conversion to a Non-Injection Well

Provide a narrative description of the work planned to be performed, or that was performed. Use additional pages as necessary. See instructions.

A workover rig capable of performing the required abandonment operations at the required depths will be moved in and set up over the well. The well casing will be inspected to determine the depth to which the well remains open and if any obstructions are present in the casing; the presence and condition of any existing surface casing will also be documented. If necessary, the well casing will be cleaned out to the bottom of the deepest screen or perforation to enable placement of cement seals.

If surface casing is present, an attempt will be made to remove it. If removal of the surface casing is not feasible, it will be left in the hole and perforated as needed to allow an annular seal to be placed to a depth of at least 25 feet bgs. In areas of agricultural use, the surface casing will be cut at least 5 feet bgs and removed.

If the surface casing cannot be removed, it will be perforated from at least 20 feet below the bedrock-LBFU contact to at least 20 feet above the contact; from at least 20 feet below the base of the MFGU to at least 20 feet above the top of the MFGU; and from at least 25 feet bgs to 5 feet bgs.

A tremie pipe will be used to place Type V cement in the open well from the bottom of the well casing to the top of the well casing. Cement retainers, as described above, will be used to force cement grout into the annulus and behind perforated screen intervals, as necessary.

If the well casing has been obstructed, as much cement as possible will be placed from 100 feet below the LBFU-bedrock contact to the top of the casing.

The volume of Type V cement will be recorded and will not be less than the estimated volume of material required to fill each interval. All cement grout will consist of Type V cement, or equivalent approved in accordance with the UIC Permit.

Certification

I certify under the penalty of law that I have personally examined and am familiar with the information submitted in this document and all attachments and that, based on my inquiry of those individuals immediately responsible for obtaining the information, I believe that the information is true, accurate, and complete. I am aware that there are significant penalties for submitting false information, including the possibliity of fine and imprisonment. (Ref. 40 CFR § 144.32)

Name and Official Title *(Please type or print)*	Signature	Date Signed
Dan Johnson, VP - General Manager		10/3/2019

INSTRUCTIONS FOR FORM 7520-19

This form replaces forms 7520-12 and 7520-14. Use this form only when work is planned or has occurred that affects the well's construction or operation as an injection well, including work on the casing, tubing or packer (or for shallow Class V wells, the subsurface fluid emplacement network). Use one form per injection well. While reports or other information developed by contractors or service companies may be attached, this form must be signed by a responsible entity as described at 40 CFR 144.32. Note: operators closing Class V wells should use Form 7520-17.

NAME, ADDRESS, PHONE AND/OR EMAIL OF PERMITTEE: Enter the name and street address, city/town, state, and ZIP code of the permittee. Also provide an email address (if available) and/or a phone number.

PERMIT OR EPA ID NUMBER: Enter the well identification number or permit number assigned to the well by the EPA or the permitting authority.

API NUMBER: Enter the number assigned by the local jurisdiction (usually a State Oil and Gas Agency) using the American Petroleum Institute standard numbering system.

FULL WELL NAME: Enter the full name of the well or project.

Enter the **STATE** and **COUNTY** where the well is located. For States that do not have counties, use the name of that State's equivalent jurisdiction at a more local level.

WELL LOCATION: Fill in the complete township, range, and section to the nearest quarter-quarter section. A township is north or south of the baseline, and a range is east or west of the principal meridian (e.g., T12N, R34W). Also include the distance, in feet, from the nearest north or south line and nearest east or west line of the quarter-section. Also, enter the **latitude** and **longitude** of the well in decimal degrees, to five or six places if possible; be sure to include a negative sign for the longitude of a well in the Western Hemisphere and a negative sign for the latitude of a well in the Southern Hemisphere.

Enter the **WELL CLASS,** i.e., the class of injection well as defined in 40 CFR 144.6.

TIMING OF THE ACTION: Check ***Notice prior to work*** if the activity has not yet occurred (i.e., is planned). Check ***Report after work*** if the activity described has already occurred. As appropriate, include the date the activity is expected to start or the date the activity was completed. (Note this may not be available, e.g., for a plugging plan submitted with a permit application.)

TYPE OF ACTION: Check the appropriate box to describe the kind of activity being reported. Check ***Well Rework*** for work that was/will be performed on the well after it has already been in operation as an injection well. Check ***Plugging and Abandonment*** to report on plans for or descriptions of final closure/plugging after use as an injection well. Check ***Conversion to a Non-Injection Well*** if the well is to be converted to something other than an injection well.

Provide a **NARRATIVE DESCRIPTION** of the work planned to be performed, or that was performed. The narrative should include a description of the main procedures planned or that occurred during the work activity. A service company report, daily report, or similar document may be attached if it includes all the requested information and is clear and legible.

For well reworks, include the following information: The reason for the well rework; depths of activity; type of activity; changes to injection well configuration, well casing, or cement behind casing; any plug added to the well and its depth; any newly drilled interval and its depth; method(s) to demonstrate that the well has mechanical integrity (as applicable); and any deviations from the approved rework plan (as applicable).

For a well plugging plan, include the following information: Reason for the well plugging; number of plugs placed, and their depths; materials used as plugs (e.g., cast iron bridge plug, cement, cement retainer); method to set plugs; and wait-on-cement times, if any. Also provide one or more cost estimates from an independent firm in the business of plugging and abandoning wells to plug the well as described in the plan.

For well plugging affidavit, include the following information: Reason for the well plugging; number of plugs placed, and their depths; materials used as plugs (e.g., cast iron bridge plug, cement, cement retainer); method to set plugs; wait-on-cement times, if any; and any deviations from the approved plugging plan (if applicable).

For conversion to a non-injection well, include the following information: Depths of activity; type of activity; changes to injection well configuration, well casing, or cement behind casing; any plug added to the well and its depth; any newly drilled interval and its depth; depths of new perforations; and method(s) to demonstrate that the well has mechanical integrity (as applicable).

For all of the above activities, include a well sketch depicting the work, results of well tests/logging performed, service company tickets, and any other available information demonstrating how the work was/is to be performed. Also, specify whether depths are below ground surface, relative to Kelly bushing, etc.

CERTIFICATION: This form must be signed and dated by either: a responsible corporate officer for a corporation, by a general partner for a partnership, by the proprietor of a sole proprietorship, or by a principal executive or ranking elected official for a public agency.

PAPERWORK REDUCTION ACT NOTICE: The public reporting and recordkeeping burden for this collection of information is estimated to average between 6.0 and 7.9 hours per response, depending on the injection well class. Burden means the total time, effort, or financial resource expended by persons to generate, maintain, retain, or disclose or provide information to or for a Federal Agency. This includes the time needed to review instructions; develop, acquire, install, and utilize technology and systems for the purposes of collecting, validating, and verifying information, processing and maintaining information, and disclosing and providing information; adjust the existing ways to comply with any previously applicable instructions and requirements; train personnel to be able to respond to the collection of information; search data sources; complete and review the collection of information; and, transmit or otherwise disclose the information. An agency may not conduct or sponsor, and a person is not required to respond to, a collection of information unless it displays a currently valid OMB control number. Send comments on the Agency's need for this information, the accuracy of the provided burden estimates, and any suggested methods for minimizing respondent burden, including the use of automated collection techniques to Director, Collection Strategies Division, U.S. Environmental Protection Agency (2822), 1200 Pennsylvania Ave., NW., Washington, D.C. 20460. Include the OMB control number in any correspondence. Do not send the completed forms to this address.

PROPOSED DESIGN
OBSERVATION/PERIMETER WELL
O5.1-O

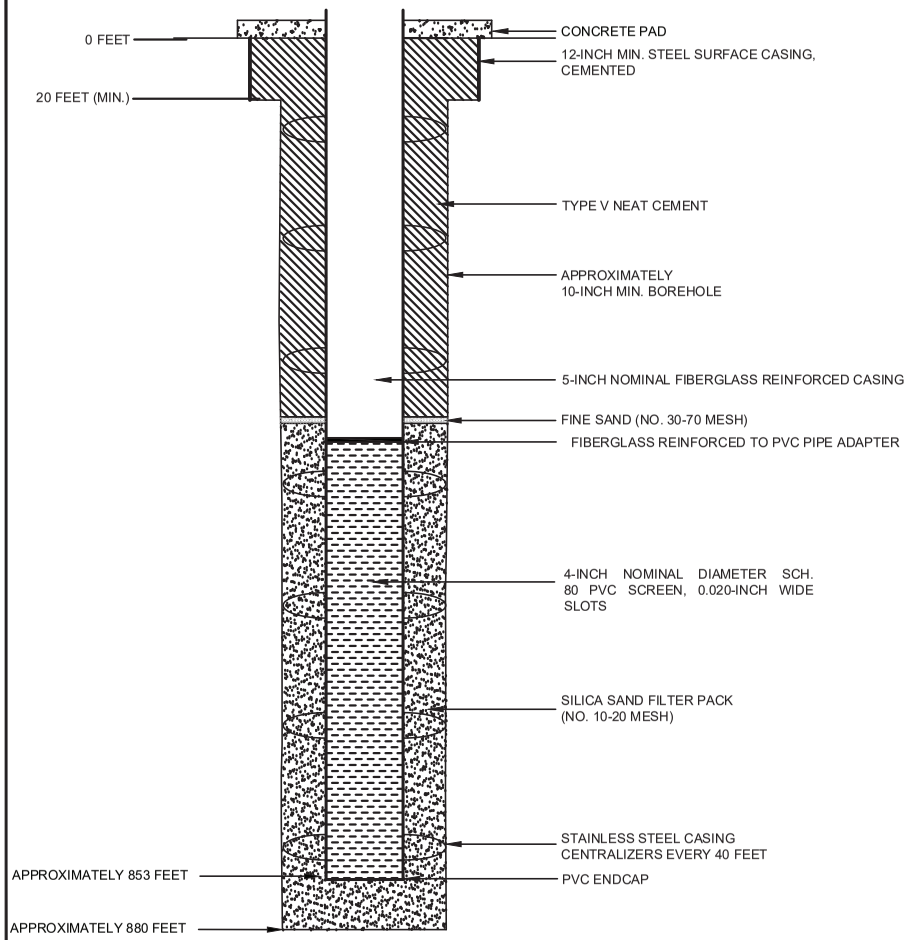

PROPOSED PLUGGING AND
ABANDONMENT OBSERVATION/
PERIMETER WELL O5.1-O

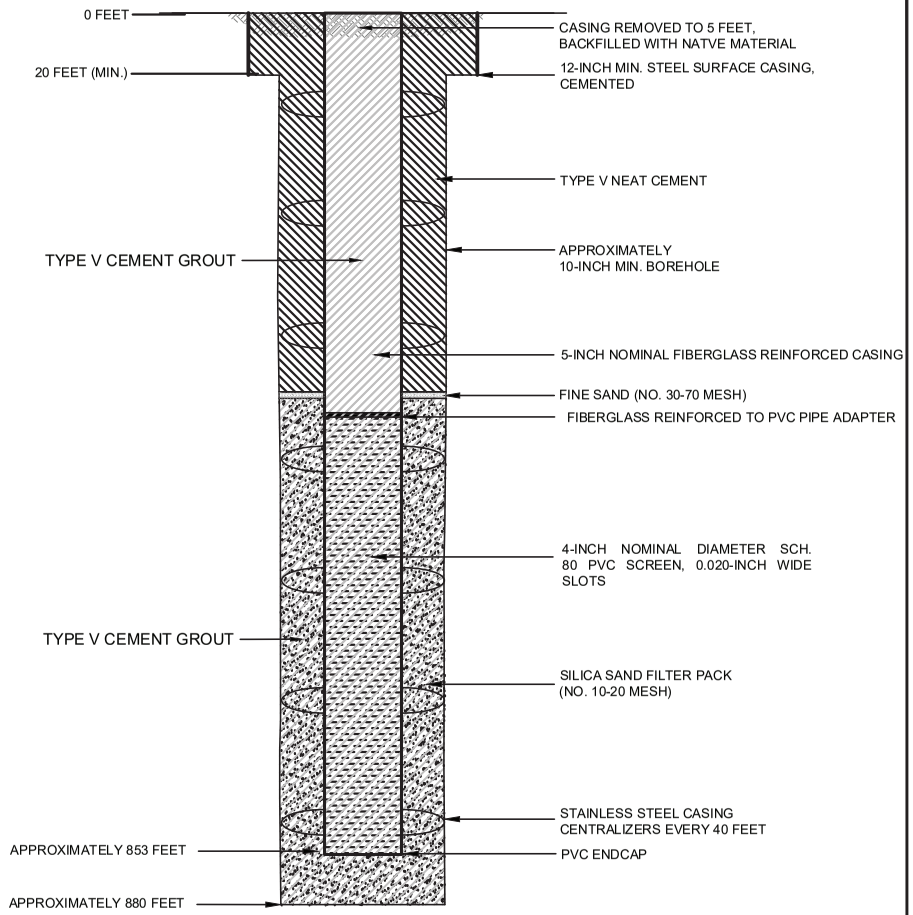

NOTES

1. WELL DESIGN DETAILS ARE BASED ON CORE HOLE AND WELL LOG RECORDS.

HALEY ALDRICH

FLORENCE COPPER, INC.
FLORENCE, ARIZONA

ABANDONMENT SCHEMATIC
OBSERVATION/PERIMETER
WELL O5.1-O

SEPTEMBER 2019
SCALE: AS SHOWN

FIGURE 1

OMB No. 2040-0042 Approval Expires 4/30/2022

United States Environmental Protection Agency

WELL REWORK RECORD, PLUGGING AND ABANDONMENT PLAN, OR PLUGGING AND ABANDONMENT AFFIDAVIT

Name and Address, Phone Number and/or Email of Permittee

Florence Copper Project
1575 W Hunt Hwy,
Florence, AZ 85132

Permit or EPA ID Number	API Number	Full Well Name
R9UIC-AZ3-FY11-1		O5.2-O

State	County
Arizona	Pinal

Locate well in two directions from nearest lines of quarter section and drilling unit

Surface Location

SW 1/4 of SE 1/4 of Section 28 Township 4S Range 9E

Latitude 33.04630899

Longitude -111.4286964

_____ ft. from (N/S) _____ Line of quarter section

_____ ft. from (E/W) _____ Line of quarter section.

Well Class	Timing of Action (pick one)	Type of Action (pick one)
☐ Class I ☐ Class II ☑ Class III ☐ Class V	☑ Notice Prior to Work Date Expected to Commence March 2021 ☐ Report After Work Date Work Ended	☐ Well Rework ☑ Plugging and Abandonment ☐ Conversion to a Non-Injection Well

Provide a narrative description of the work planned to be performed, or that was performed. Use additional pages as necessary. See instructions.

A workover rig capable of performing the required abandonment operations at the required depths will be moved in and set up over the well. The well casing will be inspected to determine the depth to which the well remains open and if any obstructions are present in the casing; the presence and condition of any existing surface casing will also be documented. If necessary, the well casing will be cleaned out to the bottom of the deepest screen or perforation to enable placement of cement seals.

If surface casing is present, an attempt will be made to remove it. If removal of the surface casing is not feasible, it will be left in the hole and perforated as needed to allow an annular seal to be placed to a depth of at least 25 feet bgs. In areas of agricultural use, the surface casing will be cut at least 5 feet bgs and removed.

If the surface casing cannot be removed, it will be perforated from at least 20 feet below the bedrock-LBFU contact to at least 20 feet above the contact; from at least 20 feet below the base of the MFGU to at least 20 feet above the top of the MFGU; and from at least 25 feet bgs to 5 feet bgs.

A tremie pipe will be used to place Type V cement in the open well from the bottom of the well casing to the top of the well casing. Cement retainers, as described above, will be used to force cement grout into the annulus and behind perforated screen intervals, as necessary.

If the well casing has been obstructed, as much cement as possible will be placed from 100 feet below the LBFU-bedrock contact to the top of the casing.

The volume of Type V cement will be recorded and will not be less than the estimated volume of material required to fill each interval. All cement grout will consist of Type V cement, or equivalent approved in accordance with the UIC Permit.

Certification

I certify under the penalty of law that I have personally examined and am familiar with the information submitted in this document and all attachments and that, based on my inquiry of those individuals immediately responsible for obtaining the information, I believe that the information is true, accurate, and complete. I am aware that there are significant penalties for submitting false information, including the possibliity of fine and imprisonment. (Ref. 40 CFR § 144.32)

Name and Official Title *(Please type or print)*	Signature	Date Signed
Dan Johnson, VP - General Manager		10/3/2019

INSTRUCTIONS FOR FORM 7520-19

This form replaces forms 7520-12 and 7520-14. Use this form only when work is planned or has occurred that affects the well's construction or operation as an injection well, including work on the casing, tubing or packer (or for shallow Class V wells, the subsurface fluid emplacement network). Use one form per injection well. While reports or other information developed by contractors or service companies may be attached, this form must be signed by a responsible entity as described at 40 CFR 144.32. Note: operators closing Class V wells should use Form 7520-17.

NAME, ADDRESS, PHONE AND/OR EMAIL OF PERMITTEE: Enter the name and street address, city/town, state, and ZIP code of the permittee. Also provide an email address (if available) and/or a phone number.

PERMIT OR EPA ID NUMBER: Enter the well identification number or permit number assigned to the well by the EPA or the permitting authority.

API NUMBER: Enter the number assigned by the local jurisdiction (usually a State Oil and Gas Agency) using the American Petroleum Institute standard numbering system.

FULL WELL NAME: Enter the full name of the well or project.

Enter the **STATE** and **COUNTY** where the well is located. For States that do not have counties, use the name of that State's equivalent jurisdiction at a more local level.

WELL LOCATION: Fill in the complete township, range, and section to the nearest quarter-quarter section. A township is north or south of the baseline, and a range is east or west of the principal meridian (e.g., T12N, R34W). Also include the distance, in feet, from the nearest north or south line and nearest east or west line of the quarter-section. Also, enter the **latitude** and **longitude** of the well in decimal degrees, to five or six places if possible; be sure to include a negative sign for the longitude of a well in the Western Hemisphere and a negative sign for the latitude of a well in the Southern Hemisphere.

Enter the **WELL CLASS,** i.e., the class of injection well as defined in 40 CFR 144.6.

TIMING OF THE ACTION: Check ***Notice prior to work*** if the activity has not yet occurred (i.e., is planned). Check ***Report after work*** if the activity described has already occurred. As appropriate, include the date the activity is expected to start or the date the activity was completed. (Note this may not be available, e.g., for a plugging plan submitted with a permit application.)

TYPE OF ACTION: Check the appropriate box to describe the kind of activity being reported. Check ***Well Rework*** for work that was/will be performed on the well after it has already been in operation as an injection well. Check ***Plugging and Abandonment*** to report on plans for or descriptions of final closure/plugging after use as an injection well. Check ***Conversion to a Non-Injection Well*** if the well is to be converted to something other than an injection well.

Provide a **NARRATIVE DESCRIPTION** of the work planned to be performed, or that was performed. The narrative should include a description of the main procedures planned or that occurred during the work activity. A service company report, daily report, or similar document may be attached if it includes all the requested information and is clear and legible.

For well reworks, include the following information: The reason for the well rework; depths of activity; type of activity; changes to injection well configuration, well casing, or cement behind casing; any plug added to the well and its depth; any newly drilled interval and its depth; method(s) to demonstrate that the well has mechanical integrity (as applicable); and any deviations from the approved rework plan (as applicable).

For a well plugging plan, include the following information: Reason for the well plugging; number of plugs placed, and their depths; materials used as plugs (e.g., cast iron bridge plug, cement, cement retainer); method to set plugs; and wait-on-cement times, if any. Also provide one or more cost estimates from an independent firm in the business of plugging and abandoning wells to plug the well as described in the plan.

For well plugging affidavit, include the following information: Reason for the well plugging; number of plugs placed, and their depths; materials used as plugs (e.g., cast iron bridge plug, cement, cement retainer); method to set plugs; wait-on-cement times, if any; and any deviations from the approved plugging plan (if applicable).

For conversion to a non-injection well, include the following information: Depths of activity; type of activity; changes to injection well configuration, well casing, or cement behind casing; any plug added to the well and its depth; any newly drilled interval and its depth; depths of new perforations; and method(s) to demonstrate that the well has mechanical integrity (as applicable).

For all of the above activities, include a well sketch depicting the work, results of well tests/logging performed, service company tickets, and any other available information demonstrating how the work was/is to be performed. Also, specify whether depths are below ground surface, relative to Kelly bushing, etc.

CERTIFICATION: This form must be signed and dated by either: a responsible corporate officer for a corporation, by a general partner for a partnership, by the proprietor of a sole proprietorship, or by a principal executive or ranking elected official for a public agency.

PAPERWORK REDUCTION ACT NOTICE: The public reporting and recordkeeping burden for this collection of information is estimated to average between 6.0 and 7.9 hours per response, depending on the injection well class. Burden means the total time, effort, or financial resource expended by persons to generate, maintain, retain, or disclose or provide information to or for a Federal Agency. This includes the time needed to review instructions; develop, acquire, install, and utilize technology and systems for the purposes of collecting, validating, and verifying information, processing and maintaining information, and disclosing and providing information; adjust the existing ways to comply with any previously applicable instructions and requirements; train personnel to be able to respond to the collection of information; search data sources; complete and review the collection of information; and, transmit or otherwise disclose the information. An agency may not conduct or sponsor, and a person is not required to respond to, a collection of information unless it displays a currently valid OMB control number. Send comments on the Agency's need for this information, the accuracy of the provided burden estimates, and any suggested methods for minimizing respondent burden, including the use of automated collection techniques to Director, Collection Strategies Division, U.S. Environmental Protection Agency (2822), 1200 Pennsylvania Ave., NW., Washington, D.C. 20460. Include the OMB control number in any correspondence. Do not send the completed forms to this address.

PROPOSED DESIGN
OBSERVATION/PERIMETER WELL
O5.2-O

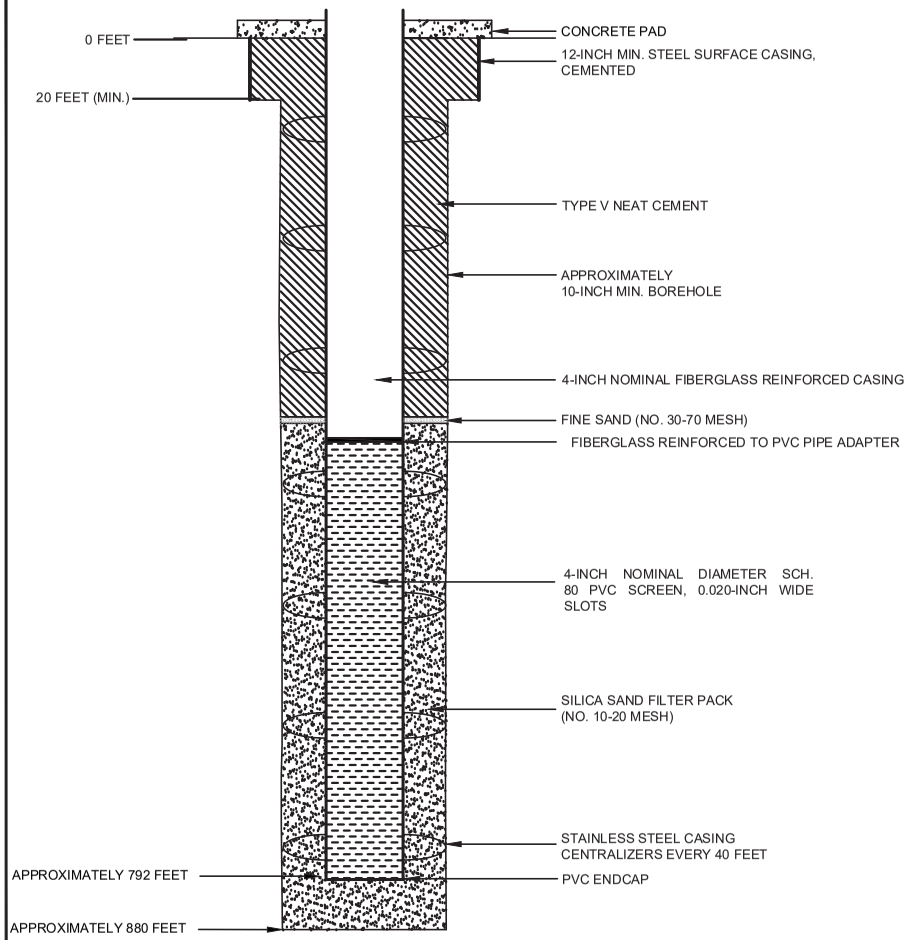

PROPOSED PLUGGING AND
ABANDONMENT OBSERVATION/
PERIMETER WELL O5.2-O

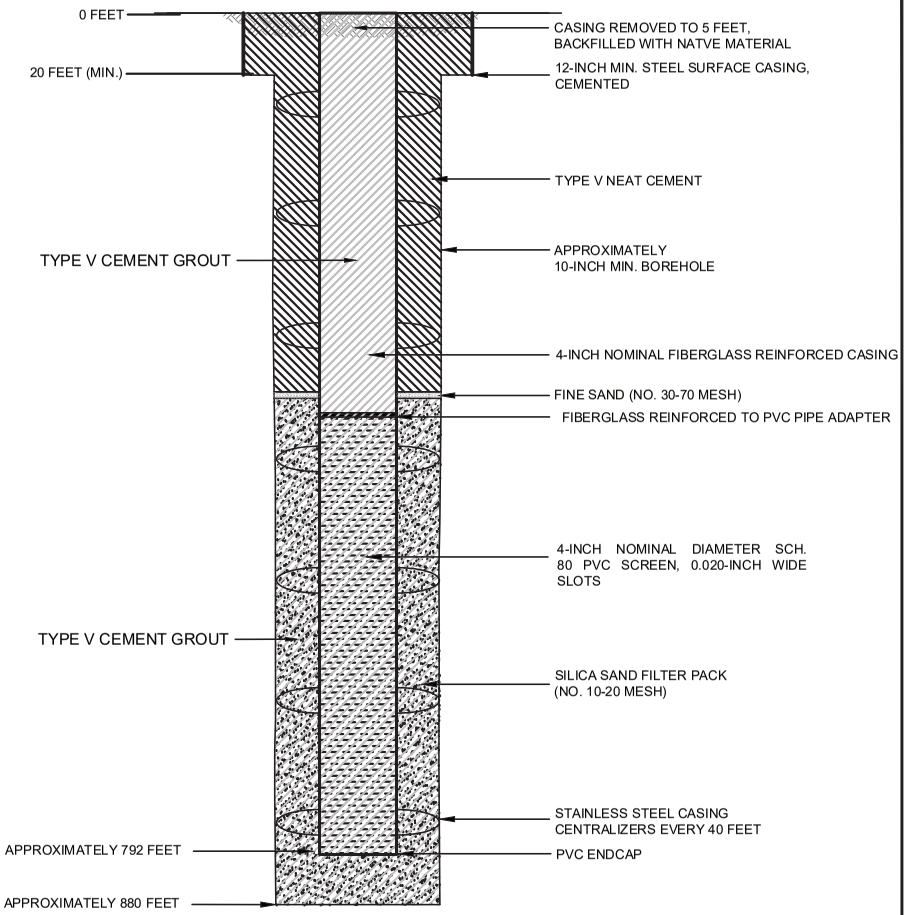

NOTES

1. WELL DESIGN DETAILS ARE BASED ON CORE HOLE AND WELL LOG RECORDS.

HALEY ALDRICH

FLORENCE COPPER, INC.
FLORENCE, ARIZONA

ABANDONMENT SCHEMATIC
OBSERVATION/PERIMETER
WELL O5.2-O

SEPTEMBER 2019
SCALE: AS SHOWN

FIGURE 1

OMB No. 2040-0042 Approval Expires 4/30/2022

United States Environmental Protection Agency

WELL REWORK RECORD, PLUGGING AND ABANDONMENT PLAN, OR PLUGGING AND ABANDONMENT AFFIDAVIT

Name and Address, Phone Number and/or Email of Permittee

Florence Copper Project
1575 W Hunt Hwy,
Florence, AZ 85132

Permit or EPA ID Number	API Number	Full Well Name
R9UIC-AZ3-FY11-1		O8-GU

State	County
Arizona	Pinal

Locate well in two directions from nearest lines of quarter section and drilling unit

Latitude 33.05205935

Surface Location

NW **1/4 of** SE **1/4 of Section** 28 **Township** 4S **Range** 9E

Longitude -111.4291167

_____ **ft. from (N/S)** _____ **Line of quarter section**

_____ **ft. from (E/W)** _____ **Line of quarter section.**

Well Class	Timing of Action (pick one)	Type of Action (pick one)
☐ Class I ☐ Class II ☑ Class III ☐ Class V	☑ Notice Prior to Work Date Expected to Commence March 2021 ☐ Report After Work Date Work Ended	☐ Well Rework ☑ Plugging and Abandonment ☐ Conversion to a Non-Injection Well

Provide a narrative description of the work planned to be performed, or that was performed. Use additional pages as necessary. See instructions.

A workover rig capable of performing the required abandonment operations at the required depths will be moved in and set up over the well. The well casing will be inspected to determine the depth to which the well remains open and if any obstructions are present in the casing; the presence and condition of any existing surface casing will also be documented. If necessary, the well casing will be cleaned out to the bottom of the deepest screen or perforation to enable placement of cement seals.

If surface casing is present, an attempt will be made to remove it. If removal of the surface casing is not feasible, it will be left in the hole and perforated as needed to allow an annular seal to be placed to a depth of at least 25 feet bgs. In areas of agricultural use, the surface casing will be cut at least 5 feet bgs and removed.

If the surface casing cannot be removed, it will be perforated from at least 20 feet below the bedrock-LBFU contact to at least 20 feet above the contact; from at least 20 feet below the base of the MFGU to at least 20 feet above the top of the MFGU; and from at least 25 feet bgs to 5 feet bgs.

A tremie pipe will be used to place Type V cement in the open well from the bottom of the well casing to the top of the well casing. Cement retainers, as described above, will be used to force cement grout into the annulus and behind perforated screen intervals, as necessary.

If the well casing has been obstructed, as much cement as possible will be placed from 100 feet below the LBFU-bedrock contact to the top of the casing.

The volume of Type V cement will be recorded and will not be less than the estimated volume of material required to fill each interval. All cement grout will consist of Type V cement, or equivalent approved in accordance with the UIC Permit.

Certification

I certify under the penalty of law that I have personally examined and am familiar with the information submitted in this document and all attachments and that, based on my inquiry of those individuals immediately responsible for obtaining the information, I believe that the information is true, accurate, and complete. I am aware that there are significant penalties for submitting false information, including the possibliity of fine and imprisonment. (Ref. 40 CFR § 144.32)

Name and Official Title *(Please type or print)*	Signature	Date Signed
Dan Johnson, VP - General Manager		10/3/2019

INSTRUCTIONS FOR FORM 7520-19

This form replaces forms 7520-12 and 7520-14. Use this form only when work is planned or has occurred that affects the well's construction or operation as an injection well, including work on the casing, tubing or packer (or for shallow Class V wells, the subsurface fluid emplacement network). Use one form per injection well. While reports or other information developed by contractors or service companies may be attached, this form must be signed by a responsible entity as described at 40 CFR 144.32. Note: operators closing Class V wells should use Form 7520-17.

NAME, ADDRESS, PHONE AND/OR EMAIL OF PERMITTEE: Enter the name and street address, city/town, state, and ZIP code of the permittee. Also provide an email address (if available) and/or a phone number.

PERMIT OR EPA ID NUMBER: Enter the well identification number or permit number assigned to the well by the EPA or the permitting authority.

API NUMBER: Enter the number assigned by the local jurisdiction (usually a State Oil and Gas Agency) using the American Petroleum Institute standard numbering system.

FULL WELL NAME: Enter the full name of the well or project.

Enter the **STATE** and **COUNTY** where the well is located. For States that do not have counties, use the name of that State's equivalent jurisdiction at a more local level.

WELL LOCATION: Fill in the complete township, range, and section to the nearest quarter-quarter section. A township is north or south of the baseline, and a range is east or west of the principal meridian (e.g., T12N, R34W). Also include the distance, in feet, from the nearest north or south line and nearest east or west line of the quarter-section. Also, enter the **latitude** and **longitude** of the well in decimal degrees, to five or six places if possible; be sure to include a negative sign for the longitude of a well in the Western Hemisphere and a negative sign for the latitude of a well in the Southern Hemisphere.

Enter the **WELL CLASS,** i.e., the class of injection well as defined in 40 CFR 144.6.

TIMING OF THE ACTION: Check ***Notice prior to work*** if the activity has not yet occurred (i.e., is planned). Check ***Report after work*** if the activity described has already occurred. As appropriate, include the date the activity is expected to start or the date the activity was completed. (Note this may not be available, e.g., for a plugging plan submitted with a permit application.)

TYPE OF ACTION: Check the appropriate box to describe the kind of activity being reported. Check ***Well Rework*** for work that was/will be performed on the well after it has already been in operation as an injection well. Check ***Plugging and Abandonment*** to report on plans for or descriptions of final closure/plugging after use as an injection well. Check ***Conversion to a Non-Injection Well*** if the well is to be converted to something other than an injection well.

Provide a **NARRATIVE DESCRIPTION** of the work planned to be performed, or that was performed. The narrative should include a description of the main procedures planned or that occurred during the work activity. A service company report, daily report, or similar document may be attached if it includes all the requested information and is clear and legible.

For well reworks, include the following information: The reason for the well rework; depths of activity; type of activity; changes to injection well configuration, well casing, or cement behind casing; any plug added to the well and its depth; any newly drilled interval and its depth; method(s) to demonstrate that the well has mechanical integrity (as applicable); and any deviations from the approved rework plan (as applicable).

For a well plugging plan, include the following information: Reason for the well plugging; number of plugs placed, and their depths; materials used as plugs (e.g., cast iron bridge plug, cement, cement retainer); method to set plugs; and wait-on-cement times, if any. Also provide one or more cost estimates from an independent firm in the business of plugging and abandoning wells to plug the well as described in the plan.

For well plugging affidavit, include the following information: Reason for the well plugging; number of plugs placed, and their depths; materials used as plugs (e.g., cast iron bridge plug, cement, cement retainer); method to set plugs; wait-on-cement times, if any; and any deviations from the approved plugging plan (if applicable).

For conversion to a non-injection well, include the following information: Depths of activity; type of activity; changes to injection well configuration, well casing, or cement behind casing; any plug added to the well and its depth; any newly drilled interval and its depth; depths of new perforations; and method(s) to demonstrate that the well has mechanical integrity (as applicable).

For all of the above activities, include a well sketch depicting the work, results of well tests/logging performed, service company tickets, and any other available information demonstrating how the work was/is to be performed. Also, specify whether depths are below ground surface, relative to Kelly bushing, etc.

CERTIFICATION: This form must be signed and dated by either: a responsible corporate officer for a corporation, by a general partner for a partnership, by the proprietor of a sole proprietorship, or by a principal executive or ranking elected official for a public agency.

PAPERWORK REDUCTION ACT NOTICE: The public reporting and recordkeeping burden for this collection of information is estimated to average between 6.0 and 7.9 hours per response, depending on the injection well class. Burden means the total time, effort, or financial resource expended by persons to generate, maintain, retain, or disclose or provide information to or for a Federal Agency. This includes the time needed to review instructions; develop, acquire, install, and utilize technology and systems for the purposes of collecting, validating, and verifying information, processing and maintaining information, and disclosing and providing information; adjust the existing ways to comply with any previously applicable instructions and requirements; train personnel to be able to respond to the collection of information; search data sources; complete and review the collection of information; and, transmit or otherwise disclose the information. An agency may not conduct or sponsor, and a person is not required to respond to, a collection of information unless it displays a currently valid OMB control number. Send comments on the Agency's need for this information, the accuracy of the provided burden estimates, and any suggested methods for minimizing respondent burden, including the use of automated collection techniques to Director, Collection Strategies Division, U.S. Environmental Protection Agency (2822), 1200 Pennsylvania Ave., NW., Washington, D.C. 20460. Include the OMB control number in any correspondence. Do not send the completed forms to this address.

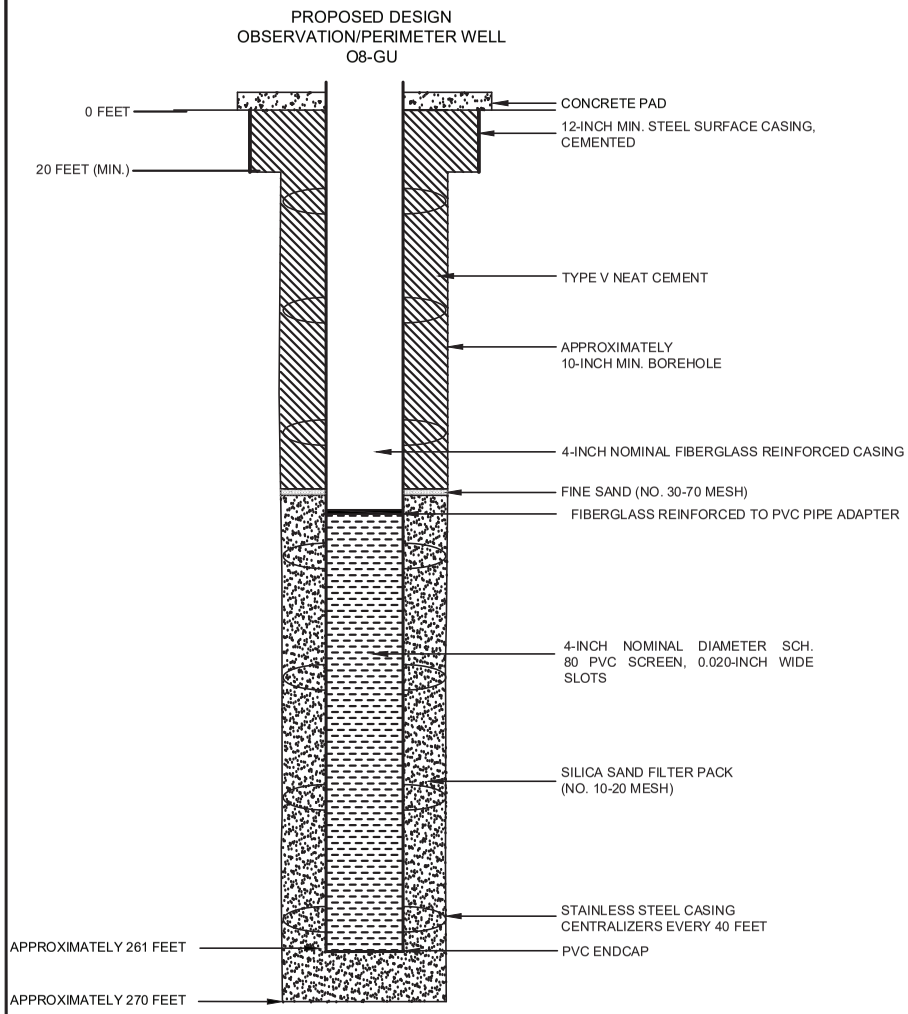

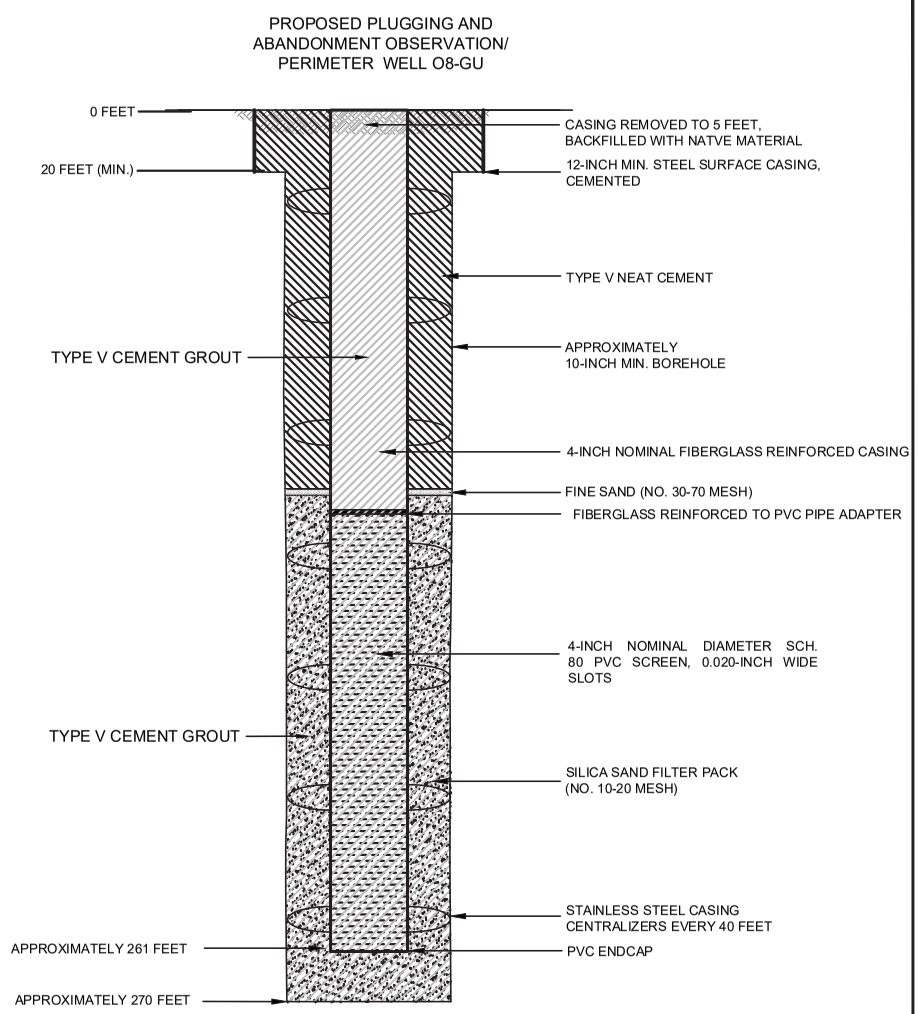

NOTES

1. WELL DESIGN DETAILS ARE BASED ON CORE HOLE AND WELL LOG RECORDS.

HALEY ALDRICH

FLORENCE COPPER, INC.
FLORENCE, ARIZONA

ABANDONMENT SCHEMATIC
OBSERVATION/PERIMETER
WELL O8-GU

SEPTEMBER 2019
SCALE: AS SHOWN

FIGURE 1

OMB No. 2040-0042 Approval Expires 4/30/2022

United States Environmental Protection Agency

WELL REWORK RECORD, PLUGGING AND ABANDONMENT PLAN, OR PLUGGING AND ABANDONMENT AFFIDAVIT

Name and Address, Phone Number and/or Email of Permittee

Florence Copper Project
1575 W Hunt Hwy,
Florence, AZ 85132

Permit or EPA ID Number	API Number	Full Well Name
R9UIC-AZ3-FY11-1		O8-O

State	County
Arizona	Pinal

Locate well in two directions from nearest lines of quarter section and drilling unit

Latitude 33.0523627

Longitude -111.4290919

Surface Location

NW **1/4 of** SE **1/4 of Section** 28 **Township** 4S **Range** 9E

_____ **ft. from (N/S)** _____ **Line of quarter section**

_____ **ft. from (E/W)** _____ **Line of quarter section.**

Well Class	Timing of Action (pick one)	Type of Action (pick one)
☐ Class I ☐ Class II ☑ Class III ☐ Class V	☑ Notice Prior to Work Date Expected to Commence March 2021 ☐ Report After Work Date Work Ended	☐ Well Rework ☑ Plugging and Abandonment ☐ Conversion to a Non-Injection Well

Provide a narrative description of the work planned to be performed, or that was performed. Use additional pages as necessary. See instructions.

A workover rig capable of performing the required abandonment operations at the required depths will be moved in and set up over the well. The well casing will be inspected to determine the depth to which the well remains open and if any obstructions are present in the casing; the presence and condition of any existing surface casing will also be documented. If necessary, the well casing will be cleaned out to the bottom of the deepest screen or perforation to enable placement of cement seals.

If surface casing is present, an attempt will be made to remove it. If removal of the surface casing is not feasible, it will be left in the hole and perforated as needed to allow an annular seal to be placed to a depth of at least 25 feet bgs. In areas of agricultural use, the surface casing will be cut at least 5 feet bgs and removed.

If the surface casing cannot be removed, it will be perforated from at least 20 feet below the bedrock-LBFU contact to at least 20 feet above the contact; from at least 20 feet below the base of the MFGU to at least 20 feet above the top of the MFGU; and from at least 25 feet bgs to 5 feet bgs.

A tremie pipe will be used to place Type V cement in the open well from the bottom of the well casing to the top of the well casing. Cement retainers, as described above, will be used to force cement grout into the annulus and behind perforated screen intervals, as necessary.

If the well casing has been obstructed, as much cement as possible will be placed from 100 feet below the LBFU-bedrock contact to the top of the casing.

The volume of Type V cement will be recorded and will not be less than the estimated volume of material required to fill each interval. All cement grout will consist of Type V cement, or equivalent approved in accordance with the UIC Permit.

Certification

I certify under the penalty of law that I have personally examined and am familiar with the information submitted in this document and all attachments and that, based on my inquiry of those individuals immediately responsible for obtaining the information, I believe that the information is true, accurate, and complete. I am aware that there are significant penalties for submitting false information, including the possibliity of fine and imprisonment. (Ref. 40 CFR § 144.32)

Name and Official Title *(Please type or print)*	Signature	Date Signed
Dan Johnson, VP - General Manager		10/3/2019

INSTRUCTIONS FOR FORM 7520-19

This form replaces forms 7520-12 and 7520-14. Use this form only when work is planned or has occurred that affects the well's construction or operation as an injection well, including work on the casing, tubing or packer (or for shallow Class V wells, the subsurface fluid emplacement network). Use one form per injection well. While reports or other information developed by contractors or service companies may be attached, this form must be signed by a responsible entity as described at 40 CFR 144.32. Note: operators closing Class V wells should use Form 7520-17.

NAME, ADDRESS, PHONE AND/OR EMAIL OF PERMITTEE: Enter the name and street address, city/town, state, and ZIP code of the permittee. Also provide an email address (if available) and/or a phone number.

PERMIT OR EPA ID NUMBER: Enter the well identification number or permit number assigned to the well by the EPA or the permitting authority.

API NUMBER: Enter the number assigned by the local jurisdiction (usually a State Oil and Gas Agency) using the American Petroleum Institute standard numbering system.

FULL WELL NAME: Enter the full name of the well or project.

Enter the **STATE** and **COUNTY** where the well is located. For States that do not have counties, use the name of that State's equivalent jurisdiction at a more local level.

WELL LOCATION: Fill in the complete township, range, and section to the nearest quarter-quarter section. A township is north or south of the baseline, and a range is east or west of the principal meridian (e.g., T12N, R34W). Also include the distance, in feet, from the nearest north or south line and nearest east or west line of the quarter-section. Also, enter the **latitude** and **longitude** of the well in decimal degrees, to five or six places if possible; be sure to include a negative sign for the longitude of a well in the Western Hemisphere and a negative sign for the latitude of a well in the Southern Hemisphere.

Enter the **WELL CLASS,** i.e., the class of injection well as defined in 40 CFR 144.6.

TIMING OF THE ACTION: Check ***Notice prior to work*** if the activity has not yet occurred (i.e., is planned). Check ***Report after work*** if the activity described has already occurred. As appropriate, include the date the activity is expected to start or the date the activity was completed. (Note this may not be available, e.g., for a plugging plan submitted with a permit application.)

TYPE OF ACTION: Check the appropriate box to describe the kind of activity being reported. Check ***Well Rework*** for work that was/will be performed on the well after it has already been in operation as an injection well. Check ***Plugging and Abandonment*** to report on plans for or descriptions of final closure/plugging after use as an injection well. Check ***Conversion to a Non-Injection Well*** if the well is to be converted to something other than an injection well.

Provide a **NARRATIVE DESCRIPTION** of the work planned to be performed, or that was performed. The narrative should include a description of the main procedures planned or that occurred during the work activity. A service company report, daily report, or similar document may be attached if it includes all the requested information and is clear and legible.

For well reworks, include the following information: The reason for the well rework; depths of activity; type of activity; changes to injection well configuration, well casing, or cement behind casing; any plug added to the well and its depth; any newly drilled interval and its depth; method(s) to demonstrate that the well has mechanical integrity (as applicable); and any deviations from the approved rework plan (as applicable).

For a well plugging plan, include the following information: Reason for the well plugging; number of plugs placed, and their depths; materials used as plugs (e.g., cast iron bridge plug, cement, cement retainer); method to set plugs; and wait-on-cement times, if any. Also provide one or more cost estimates from an independent firm in the business of plugging and abandoning wells to plug the well as described in the plan.

For well plugging affidavit, include the following information: Reason for the well plugging; number of plugs placed, and their depths; materials used as plugs (e.g., cast iron bridge plug, cement, cement retainer); method to set plugs; wait-on-cement times, if any; and any deviations from the approved plugging plan (if applicable).

For conversion to a non-injection well, include the following information: Depths of activity; type of activity; changes to injection well configuration, well casing, or cement behind casing; any plug added to the well and its depth; any newly drilled interval and its depth; depths of new perforations; and method(s) to demonstrate that the well has mechanical integrity (as applicable).

For all of the above activities, include a well sketch depicting the work, results of well tests/logging performed, service company tickets, and any other available information demonstrating how the work was/is to be performed. Also, specify whether depths are below ground surface, relative to Kelly bushing, etc.

CERTIFICATION: This form must be signed and dated by either: a responsible corporate officer for a corporation, by a general partner for a partnership, by the proprietor of a sole proprietorship, or by a principal executive or ranking elected official for a public agency.

PAPERWORK REDUCTION ACT NOTICE: The public reporting and recordkeeping burden for this collection of information is estimated to average between 6.0 and 7.9 hours per response, depending on the injection well class. Burden means the total time, effort, or financial resource expended by persons to generate, maintain, retain, or disclose or provide information to or for a Federal Agency. This includes the time needed to review instructions; develop, acquire, install, and utilize technology and systems for the purposes of collecting, validating, and verifying information, processing and maintaining information, and disclosing and providing information; adjust the existing ways to comply with any previously applicable instructions and requirements; train personnel to be able to respond to the collection of information; search data sources; complete and review the collection of information; and, transmit or otherwise disclose the information. An agency may not conduct or sponsor, and a person is not required to respond to, a collection of information unless it displays a currently valid OMB control number. Send comments on the Agency's need for this information, the accuracy of the provided burden estimates, and any suggested methods for minimizing respondent burden, including the use of automated collection techniques to Director, Collection Strategies Division, U.S. Environmental Protection Agency (2822), 1200 Pennsylvania Ave., NW., Washington, D.C. 20460. Include the OMB control number in any correspondence. Do not send the completed forms to this address.

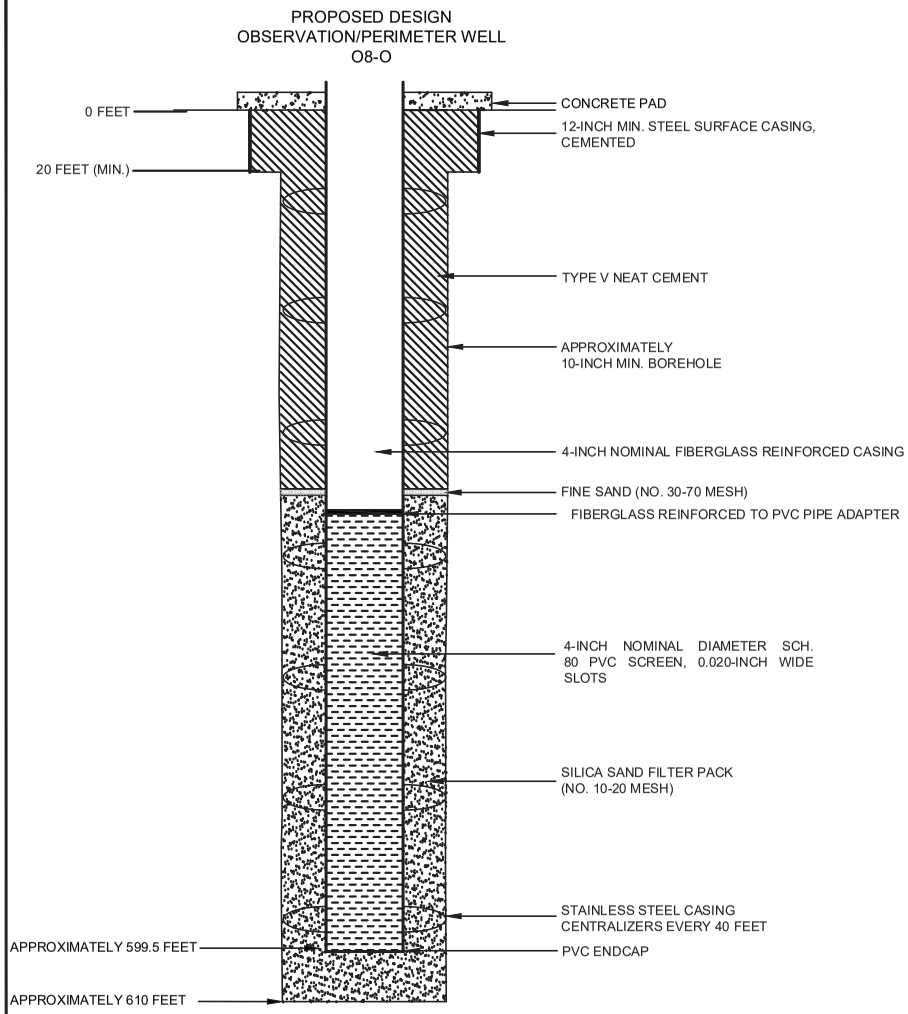

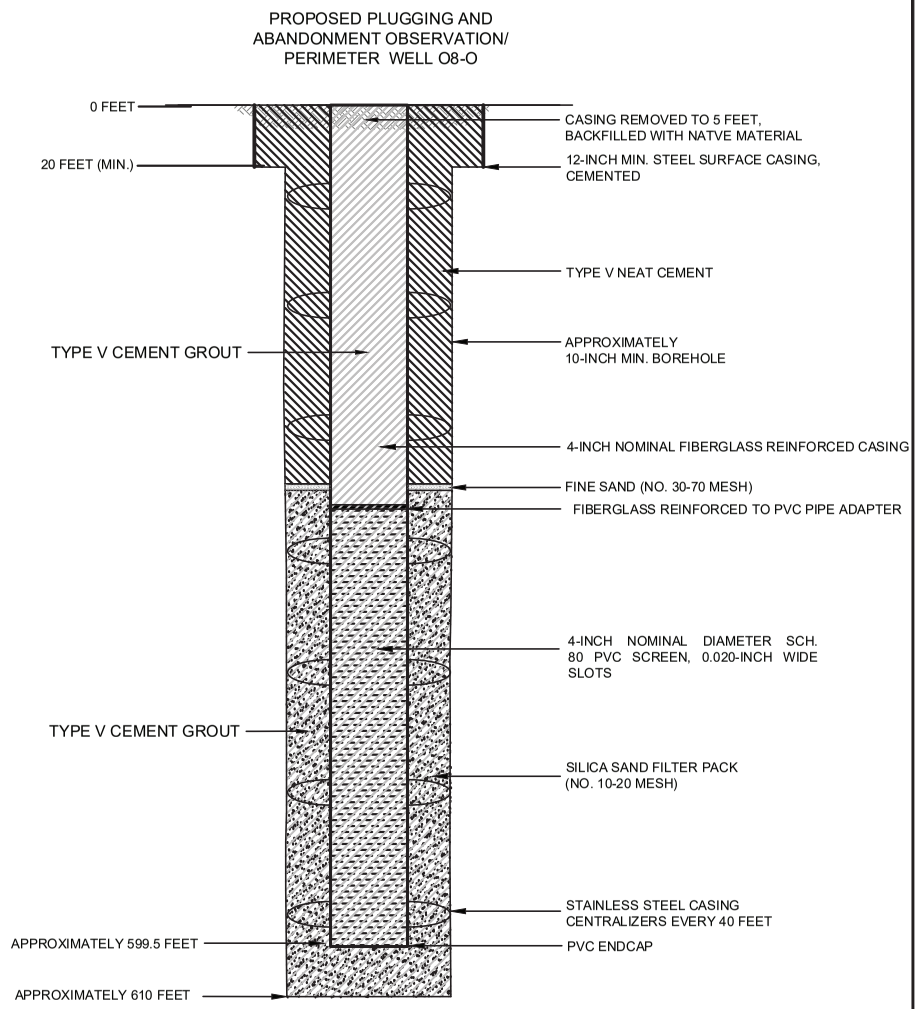

NOTES

1. WELL DESIGN DETAILS ARE BASED ON CORE HOLE AND WELL LOG RECORDS.

HALEY ALDRICH

FLORENCE COPPER, INC.
FLORENCE, ARIZONA

ABANDONMENT SCHEMATIC
OBSERVATION/PERIMETER
WELL O8-O

SEPTEMBER 2019
SCALE: AS SHOWN

FIGURE 1

OMB No. 2040-0042 Approval Expires 4/30/2022

United States Environmental Protection Agency

WELL REWORK RECORD, PLUGGING AND ABANDONMENT PLAN, OR PLUGGING AND ABANDONMENT AFFIDAVIT

Name and Address, Phone Number and/or Email of Permittee

Florence Copper Project
1575 W Hunt Hwy,
Florence, AZ 85132

Permit or EPA ID Number	API Number	Full Well Name
R9UIC-AZ3-FY11-1		O12-GL

State	County
Arizona	Pinal

Locate well in two directions from nearest lines of quarter section and drilling unit

Latitude 33.04642919

Longitude -111.4322464

Surface Location

SE **1/4 of** SW **1/4 of Section** 28 **Township** 4S **Range** 9E

_____ **ft. from (N/S)** _____ **Line of quarter section**

_____ **ft. from (E/W)** _____ **Line of quarter section.**

Well Class	Timing of Action (pick one)	Type of Action (pick one)
☐ Class I ☐ Class II ☑ Class III ☐ Class V	☑ Notice Prior to Work Date Expected to Commence March 2021 ☐ Report After Work Date Work Ended	☐ Well Rework ☑ Plugging and Abandonment ☐ Conversion to a Non-Injection Well

Provide a narrative description of the work planned to be performed, or that was performed. Use additional pages as necessary. See instructions.

A workover rig capable of performing the required abandonment operations at the required depths will be moved in and set up over the well. The well casing will be inspected to determine the depth to which the well remains open and if any obstructions are present in the casing; the presence and condition of any existing surface casing will also be documented. If necessary, the well casing will be cleaned out to the bottom of the deepest screen or perforation to enable placement of cement seals.

If surface casing is present, an attempt will be made to remove it. If removal of the surface casing is not feasible, it will be left in the hole and perforated as needed to allow an annular seal to be placed to a depth of at least 25 feet bgs. In areas of agricultural use, the surface casing will be cut at least 5 feet bgs and removed.

If the surface casing cannot be removed, it will be perforated from at least 20 feet below the bedrock-LBFU contact to at least 20 feet above the contact; from at least 20 feet below the base of the MFGU to at least 20 feet above the top of the MFGU; and from at least 25 feet bgs to 5 feet bgs.

A tremie pipe will be used to place Type V cement in the open well from the bottom of the well casing to the top of the well casing. Cement retainers, as described above, will be used to force cement grout into the annulus and behind perforated screen intervals, as necessary.

If the well casing has been obstructed, as much cement as possible will be placed from 100 feet below the LBFU-bedrock contact to the top of the casing.

The volume of Type V cement will be recorded and will not be less than the estimated volume of material required to fill each interval. All cement grout will consist of Type V cement, or equivalent approved in accordance with the UIC Permit.

Certification

I certify under the penalty of law that I have personally examined and am familiar with the information submitted in this document and all attachments and that, based on my inquiry of those individuals immediately responsible for obtaining the information, I believe that the information is true, accurate, and complete. I am aware that there are significant penalties for submitting false information, including the possibliity of fine and imprisonment. (Ref. 40 CFR § 144.32)

Name and Official Title *(Please type or print)*	Signature	Date Signed
Dan Johnson, VP - General Manager		10/3/2019

INSTRUCTIONS FOR FORM 7520-19

This form replaces forms 7520-12 and 7520-14. Use this form only when work is planned or has occurred that affects the well's construction or operation as an injection well, including work on the casing, tubing or packer (or for shallow Class V wells, the subsurface fluid emplacement network). Use one form per injection well. While reports or other information developed by contractors or service companies may be attached, this form must be signed by a responsible entity as described at 40 CFR 144.32. Note: operators closing Class V wells should use Form 7520-17.

NAME, ADDRESS, PHONE AND/OR EMAIL OF PERMITTEE: Enter the name and street address, city/town, state, and ZIP code of the permittee. Also provide an email address (if available) and/or a phone number.

PERMIT OR EPA ID NUMBER: Enter the well identification number or permit number assigned to the well by the EPA or the permitting authority.

API NUMBER: Enter the number assigned by the local jurisdiction (usually a State Oil and Gas Agency) using the American Petroleum Institute standard numbering system.

FULL WELL NAME: Enter the full name of the well or project.

Enter the **STATE** and **COUNTY** where the well is located. For States that do not have counties, use the name of that State's equivalent jurisdiction at a more local level.

WELL LOCATION: Fill in the complete township, range, and section to the nearest quarter-quarter section. A township is north or south of the baseline, and a range is east or west of the principal meridian (e.g., T12N, R34W). Also include the distance, in feet, from the nearest north or south line and nearest east or west line of the quarter-section. Also, enter the **latitude** and **longitude** of the well in decimal degrees, to five or six places if possible; be sure to include a negative sign for the longitude of a well in the Western Hemisphere and a negative sign for the latitude of a well in the Southern Hemisphere.

Enter the **WELL CLASS,** i.e., the class of injection well as defined in 40 CFR 144.6.

TIMING OF THE ACTION: Check ***Notice prior to work*** if the activity has not yet occurred (i.e., is planned). Check ***Report after work*** if the activity described has already occurred. As appropriate, include the date the activity is expected to start or the date the activity was completed. (Note this may not be available, e.g., for a plugging plan submitted with a permit application.)

TYPE OF ACTION: Check the appropriate box to describe the kind of activity being reported. Check ***Well Rework*** for work that was/will be performed on the well after it has already been in operation as an injection well. Check ***Plugging and Abandonment*** to report on plans for or descriptions of final closure/plugging after use as an injection well. Check ***Conversion to a Non-Injection Well*** if the well is to be converted to something other than an injection well.

Provide a **NARRATIVE DESCRIPTION** of the work planned to be performed, or that was performed. The narrative should include a description of the main procedures planned or that occurred during the work activity. A service company report, daily report, or similar document may be attached if it includes all the requested information and is clear and legible.

For well reworks, include the following information: The reason for the well rework; depths of activity; type of activity; changes to injection well configuration, well casing, or cement behind casing; any plug added to the well and its depth; any newly drilled interval and its depth; method(s) to demonstrate that the well has mechanical integrity (as applicable); and any deviations from the approved rework plan (as applicable).

For a well plugging plan, include the following information: Reason for the well plugging; number of plugs placed, and their depths; materials used as plugs (e.g., cast iron bridge plug, cement, cement retainer); method to set plugs; and wait-on-cement times, if any. Also provide one or more cost estimates from an independent firm in the business of plugging and abandoning wells to plug the well as described in the plan.

For well plugging affidavit, include the following information: Reason for the well plugging; number of plugs placed, and their depths; materials used as plugs (e.g., cast iron bridge plug, cement, cement retainer); method to set plugs; wait-on-cement times, if any; and any deviations from the approved plugging plan (if applicable).

For conversion to a non-injection well, include the following information: Depths of activity; type of activity; changes to injection well configuration, well casing, or cement behind casing; any plug added to the well and its depth; any newly drilled interval and its depth; depths of new perforations; and method(s) to demonstrate that the well has mechanical integrity (as applicable).

For all of the above activities, include a well sketch depicting the work, results of well tests/logging performed, service company tickets, and any other available information demonstrating how the work was/is to be performed. Also, specify whether depths are below ground surface, relative to Kelly bushing, etc.

CERTIFICATION: This form must be signed and dated by either: a responsible corporate officer for a corporation, by a general partner for a partnership, by the proprietor of a sole proprietorship, or by a principal executive or ranking elected official for a public agency.

PAPERWORK REDUCTION ACT NOTICE: The public reporting and recordkeeping burden for this collection of information is estimated to average between 6.0 and 7.9 hours per response, depending on the injection well class. Burden means the total time, effort, or financial resource expended by persons to generate, maintain, retain, or disclose or provide information to or for a Federal Agency. This includes the time needed to review instructions; develop, acquire, install, and utilize technology and systems for the purposes of collecting, validating, and verifying information, processing and maintaining information, and disclosing and providing information; adjust the existing ways to comply with any previously applicable instructions and requirements; train personnel to be able to respond to the collection of information; search data sources; complete and review the collection of information; and, transmit or otherwise disclose the information. An agency may not conduct or sponsor, and a person is not required to respond to, a collection of information unless it displays a currently valid OMB control number. Send comments on the Agency's need for this information, the accuracy of the provided burden estimates, and any suggested methods for minimizing respondent burden, including the use of automated collection techniques to Director, Collection Strategies Division, U.S. Environmental Protection Agency (2822), 1200 Pennsylvania Ave., NW., Washington, D.C. 20460. Include the OMB control number in any correspondence. Do not send the completed forms to this address.

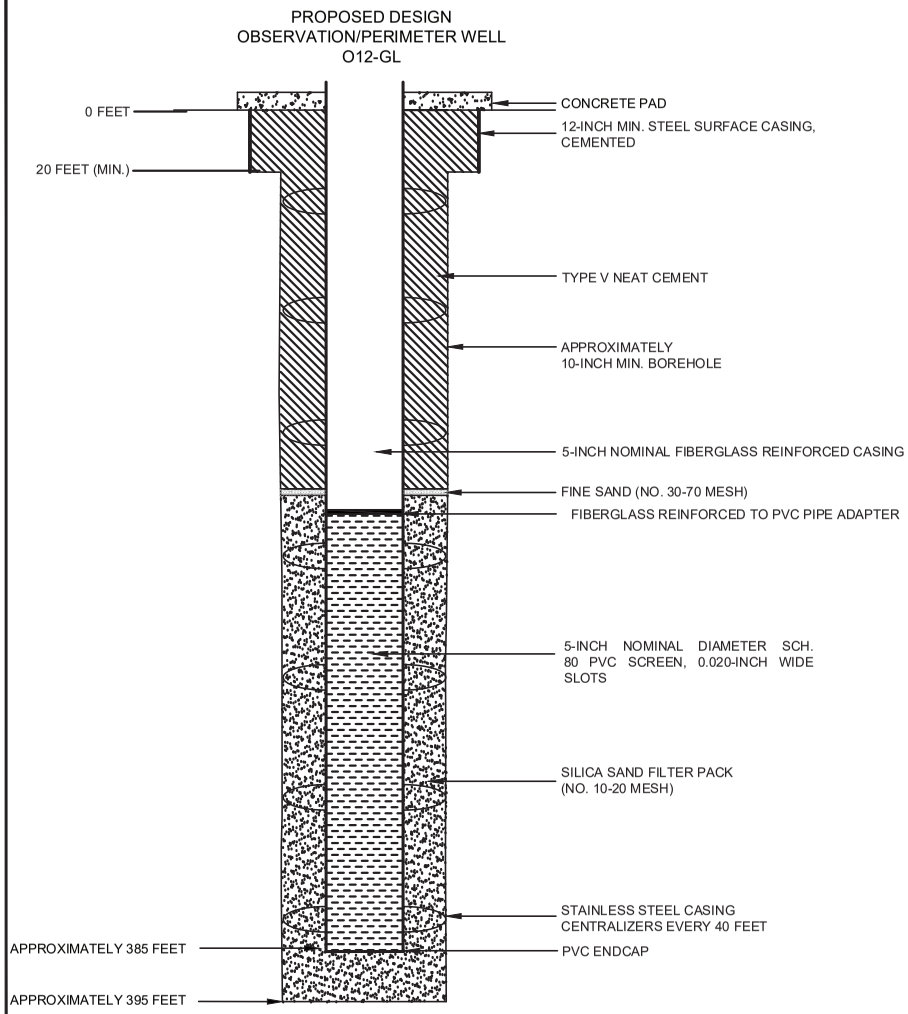

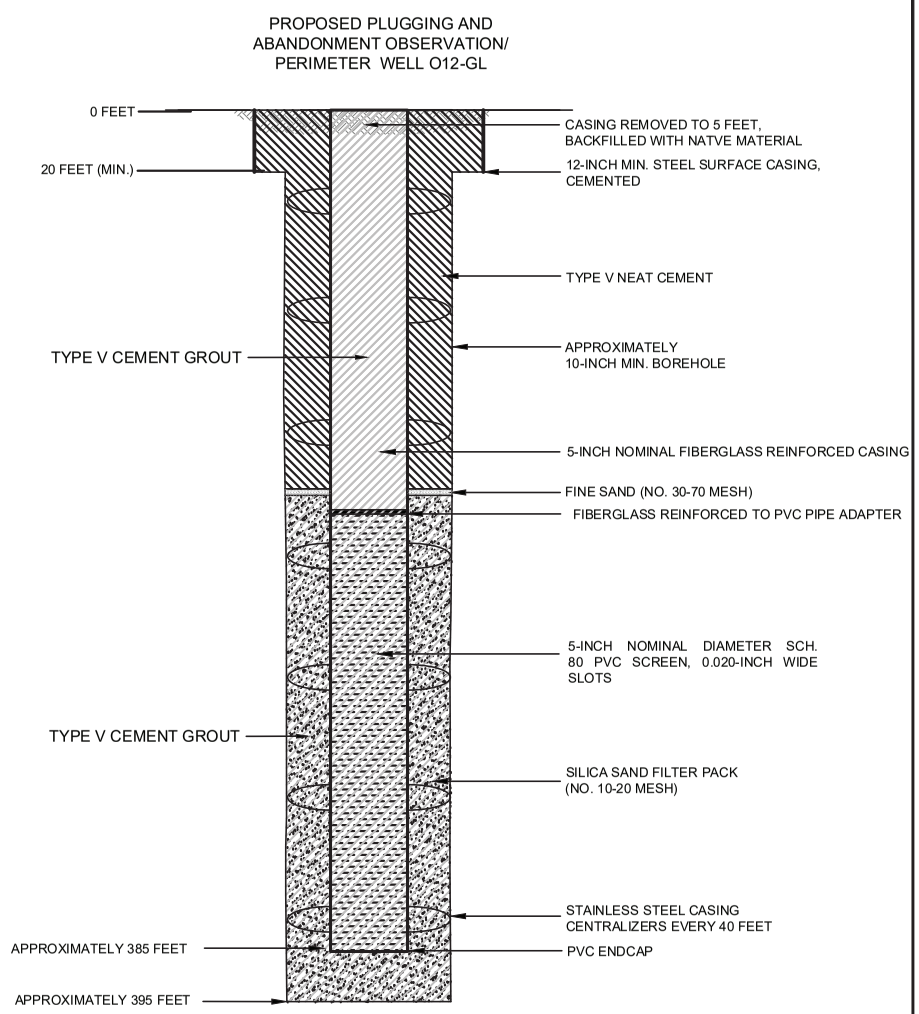

NOTES

1. WELL DESIGN DETAILS ARE BASED ON CORE HOLE AND WELL LOG RECORDS.

HALEY ALDRICH

FLORENCE COPPER, INC.
FLORENCE, ARIZONA

ABANDONMENT SCHEMATIC
OBSERVATION/PERIMETER
WELL O12-GL

SEPTEMBER 2019
SCALE: AS SHOWN

FIGURE 1

OMB No. 2040-0042 Approval Expires 4/30/2022

United States Environmental Protection Agency

EPA

WELL REWORK RECORD, PLUGGING AND ABANDONMENT PLAN, OR PLUGGING AND ABANDONMENT AFFIDAVIT

Name and Address, Phone Number and/or Email of Permittee

Florence Copper Project
1575 W Hunt Hwy,
Florence, AZ 85132

Permit or EPA ID Number	API Number	Full Well Name
R9UIC-AZ3-FY11-1		O12-O

State	County
Arizona	Pinal

Locate well in two directions from nearest lines of quarter section and drilling unit

Latitude 33.04644518

Longitude -111.4323275

Surface Location

SE **1/4 of** SW **1/4 of Section** 28 **Township** 4S **Range** 9E

_____ **ft. from (N/S)** _____ **Line of quarter section**

_____ **ft. from (E/W)** _____ **Line of quarter section.**

Well Class	Timing of Action (pick one)	Type of Action (pick one)
☐ Class I ☐ Class II ☑ Class III ☐ Class V	☑ Notice Prior to Work Date Expected to Commence March 2021 ☐ Report After Work Date Work Ended	☐ Well Rework ☑ Plugging and Abandonment ☐ Conversion to a Non-Injection Well

Provide a narrative description of the work planned to be performed, or that was performed. Use additional pages as necessary. See instructions.

A workover rig capable of performing the required abandonment operations at the required depths will be moved in and set up over the well. The well casing will be inspected to determine the depth to which the well remains open and if any obstructions are present in the casing; the presence and condition of any existing surface casing will also be documented. If necessary, the well casing will be cleaned out to the bottom of the deepest screen or perforation to enable placement of cement seals.

If surface casing is present, an attempt will be made to remove it. If removal of the surface casing is not feasible, it will be left in the hole and perforated as needed to allow an annular seal to be placed to a depth of at least 25 feet bgs. In areas of agricultural use, the surface casing will be cut at least 5 feet bgs and removed.

If the surface casing cannot be removed, it will be perforated from at least 20 feet below the bedrock-LBFU contact to at least 20 feet above the contact; from at least 20 feet below the base of the MFGU to at least 20 feet above the top of the MFGU; and from at least 25 feet bgs to 5 feet bgs.

A tremie pipe will be used to place Type V cement in the open well from the bottom of the well casing to the top of the well casing. Cement retainers, as described above, will be used to force cement grout into the annulus and behind perforated screen intervals, as necessary.

If the well casing has been obstructed, as much cement as possible will be placed from 100 feet below the LBFU-bedrock contact to the top of the casing.

The volume of Type V cement will be recorded and will not be less than the estimated volume of material required to fill each interval. All cement grout will consist of Type V cement, or equivalent approved in accordance with the UIC Permit.

Certification

I certify under the penalty of law that I have personally examined and am familiar with the information submitted in this document and all attachments and that, based on my inquiry of those individuals immediately responsible for obtaining the information, I believe that the information is true, accurate, and complete. I am aware that there are significant penalties for submitting false information, including the possibliity of fine and imprisonment. (Ref. 40 CFR § 144.32)

Name and Official Title *(Please type or print)*	Signature	Date Signed
Dan Johnson, VP - General Manager		10/3/2019

INSTRUCTIONS FOR FORM 7520-19

This form replaces forms 7520-12 and 7520-14. Use this form only when work is planned or has occurred that affects the well's construction or operation as an injection well, including work on the casing, tubing or packer (or for shallow Class V wells, the subsurface fluid emplacement network). Use one form per injection well. While reports or other information developed by contractors or service companies may be attached, this form must be signed by a responsible entity as described at 40 CFR 144.32. Note: operators closing Class V wells should use Form 7520-17.

NAME, ADDRESS, PHONE AND/OR EMAIL OF PERMITTEE: Enter the name and street address, city/town, state, and ZIP code of the permittee. Also provide an email address (if available) and/or a phone number.

PERMIT OR EPA ID NUMBER: Enter the well identification number or permit number assigned to the well by the EPA or the permitting authority.

API NUMBER: Enter the number assigned by the local jurisdiction (usually a State Oil and Gas Agency) using the American Petroleum Institute standard numbering system.

FULL WELL NAME: Enter the full name of the well or project.

Enter the **STATE** and **COUNTY** where the well is located. For States that do not have counties, use the name of that State's equivalent jurisdiction at a more local level.

WELL LOCATION: Fill in the complete township, range, and section to the nearest quarter-quarter section. A township is north or south of the baseline, and a range is east or west of the principal meridian (e.g., T12N, R34W). Also include the distance, in feet, from the nearest north or south line and nearest east or west line of the quarter-section. Also, enter the **latitude** and **longitude** of the well in decimal degrees, to five or six places if possible; be sure to include a negative sign for the longitude of a well in the Western Hemisphere and a negative sign for the latitude of a well in the Southern Hemisphere.

Enter the **WELL CLASS,** i.e., the class of injection well as defined in 40 CFR 144.6.

TIMING OF THE ACTION: Check ***Notice prior to work*** if the activity has not yet occurred (i.e., is planned). Check ***Report after work*** if the activity described has already occurred. As appropriate, include the date the activity is expected to start or the date the activity was completed. (Note this may not be available, e.g., for a plugging plan submitted with a permit application.)

TYPE OF ACTION: Check the appropriate box to describe the kind of activity being reported. Check ***Well Rework*** for work that was/will be performed on the well after it has already been in operation as an injection well. Check ***Plugging and Abandonment*** to report on plans for or descriptions of final closure/plugging after use as an injection well. Check ***Conversion to a Non-Injection Well*** if the well is to be converted to something other than an injection well.

Provide a **NARRATIVE DESCRIPTION** of the work planned to be performed, or that was performed. The narrative should include a description of the main procedures planned or that occurred during the work activity. A service company report, daily report, or similar document may be attached if it includes all the requested information and is clear and legible.

For well reworks, include the following information: The reason for the well rework; depths of activity; type of activity; changes to injection well configuration, well casing, or cement behind casing; any plug added to the well and its depth; any newly drilled interval and its depth; method(s) to demonstrate that the well has mechanical integrity (as applicable); and any deviations from the approved rework plan (as applicable).

For a well plugging plan, include the following information: Reason for the well plugging; number of plugs placed, and their depths; materials used as plugs (e.g., cast iron bridge plug, cement, cement retainer); method to set plugs; and wait-on-cement times, if any. Also provide one or more cost estimates from an independent firm in the business of plugging and abandoning wells to plug the well as described in the plan.

For well plugging affidavit, include the following information: Reason for the well plugging; number of plugs placed, and their depths; materials used as plugs (e.g., cast iron bridge plug, cement, cement retainer); method to set plugs; wait-on-cement times, if any; and any deviations from the approved plugging plan (if applicable).

For conversion to a non-injection well, include the following information: Depths of activity; type of activity; changes to injection well configuration, well casing, or cement behind casing; any plug added to the well and its depth; any newly drilled interval and its depth; depths of new perforations; and method(s) to demonstrate that the well has mechanical integrity (as applicable).

For all of the above activities, include a well sketch depicting the work, results of well tests/logging performed, service company tickets, and any other available information demonstrating how the work was/is to be performed. Also, specify whether depths are below ground surface, relative to Kelly bushing, etc.

CERTIFICATION: This form must be signed and dated by either: a responsible corporate officer for a corporation, by a general partner for a partnership, by the proprietor of a sole proprietorship, or by a principal executive or ranking elected official for a public agency.

PAPERWORK REDUCTION ACT NOTICE: The public reporting and recordkeeping burden for this collection of information is estimated to average between 6.0 and 7.9 hours per response, depending on the injection well class. Burden means the total time, effort, or financial resource expended by persons to generate, maintain, retain, or disclose or provide information to or for a Federal Agency. This includes the time needed to review instructions; develop, acquire, install, and utilize technology and systems for the purposes of collecting, validating, and verifying information, processing and maintaining information, and disclosing and providing information; adjust the existing ways to comply with any previously applicable instructions and requirements; train personnel to be able to respond to the collection of information; search data sources; complete and review the collection of information; and, transmit or otherwise disclose the information. An agency may not conduct or sponsor, and a person is not required to respond to, a collection of information unless it displays a currently valid OMB control number. Send comments on the Agency's need for this information, the accuracy of the provided burden estimates, and any suggested methods for minimizing respondent burden, including the use of automated collection techniques to Director, Collection Strategies Division, U.S. Environmental Protection Agency (2822), 1200 Pennsylvania Ave., NW., Washington, D.C. 20460. Include the OMB control number in any correspondence. Do not send the completed forms to this address.

Saved by: MNICHOLLS Printed: 7/25/2019 7:20 PM Sheet: HA-FIG-A-L(2)
\\HALEYALDRICH.COM\SHARE\PHX_COMMON\PROJECTS\FLORENCE COPPER\132473 FLORENCE GROUNDWATER PERMITTING\CAD\132473_000-OBSERVATION_WELL_CONSTRUCTION DIAGRAM.DWG

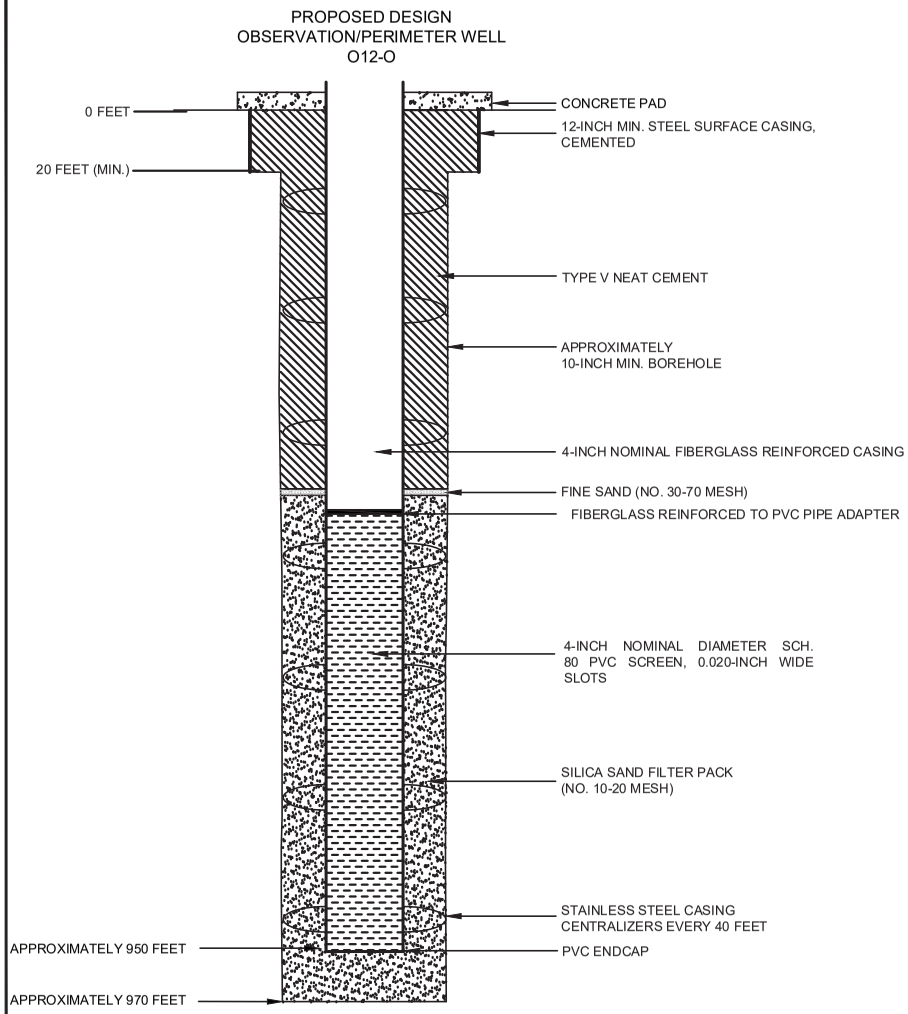

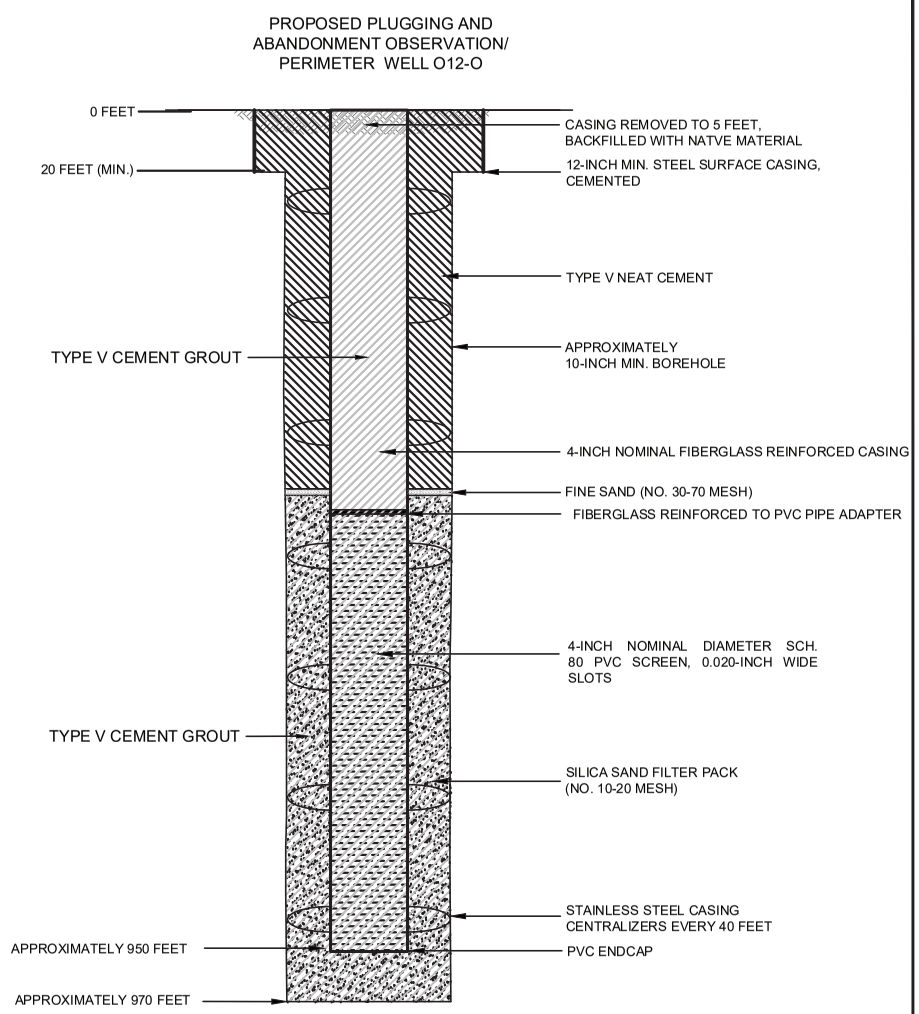

NOTES

1. WELL DESIGN DETAILS ARE BASED ON CORE HOLE AND WELL LOG RECORDS.

HALEY ALDRICH

FLORENCE COPPER, INC.
FLORENCE, ARIZONA

ABANDONMENT SCHEMATIC
OBSERVATION/PERIMETER
WELL O12-O

SEPTEMBER 2019
SCALE: AS SHOWN

FIGURE 1

OMB No. 2040-0042 Approval Expires 4/30/2022

United States Environmental Protection Agency

WELL REWORK RECORD, PLUGGING AND ABANDONMENT PLAN, OR PLUGGING AND ABANDONMENT AFFIDAVIT

Name and Address, Phone Number and/or Email of Permittee

Florence Copper Project
1575 W Hunt Hwy,
Florence, AZ 85132

Permit or EPA ID Number	API Number	Full Well Name
R9UIC-AZ3-FY11-1		O13-O

State	County
Arizona	Pinal

Locate well in two directions from nearest lines of quarter section and drilling unit

Latitude 33.05234918

Longitude -111.4349492

Surface Location

NW **1/4 of** SW **1/4 of Section** 28 **Township** 4S **Range** 9E

_____ **ft. from (N/S)** _____ **Line of quarter section**

_____ **ft. from (E/W)** _____ **Line of quarter section.**

Well Class	Timing of Action (pick one)	Type of Action (pick one)
☐ Class I ☐ Class II ☑ Class III ☐ Class V	☑ Notice Prior to Work Date Expected to Commence March 2021 ☐ Report After Work Date Work Ended	☐ Well Rework ☑ Plugging and Abandonment ☐ Conversion to a Non-Injection Well

Provide a narrative description of the work planned to be performed, or that was performed. Use additional pages as necessary. See instructions.

A workover rig capable of performing the required abandonment operations at the required depths will be moved in and set up over the well. The well casing will be inspected to determine the depth to which the well remains open and if any obstructions are present in the casing; the presence and condition of any existing surface casing will also be documented. If necessary, the well casing will be cleaned out to the bottom of the deepest screen or perforation to enable placement of cement seals.

If surface casing is present, an attempt will be made to remove it. If removal of the surface casing is not feasible, it will be left in the hole and perforated as needed to allow an annular seal to be placed to a depth of at least 25 feet bgs. In areas of agricultural use, the surface casing will be cut at least 5 feet bgs and removed.

If the surface casing cannot be removed, it will be perforated from at least 20 feet below the bedrock-LBFU contact to at least 20 feet above the contact; from at least 20 feet below the base of the MFGU to at least 20 feet above the top of the MFGU; and from at least 25 feet bgs to 5 feet bgs.

A tremie pipe will be used to place Type V cement in the open well from the bottom of the well casing to the top of the well casing. Cement retainers, as described above, will be used to force cement grout into the annulus and behind perforated screen intervals, as necessary.

If the well casing has been obstructed, as much cement as possible will be placed from 100 feet below the LBFU-bedrock contact to the top of the casing.

The volume of Type V cement will be recorded and will not be less than the estimated volume of material required to fill each interval. All cement grout will consist of Type V cement, or equivalent approved in accordance with the UIC Permit.

Certification

I certify under the penalty of law that I have personally examined and am familiar with the information submitted in this document and all attachments and that, based on my inquiry of those individuals immediately responsible for obtaining the information, I believe that the information is true, accurate, and complete. I am aware that there are significant penalties for submitting false information, including the possibliity of fine and imprisonment. (Ref. 40 CFR § 144.32)

Name and Official Title *(Please type or print)*	Signature	Date Signed
Dan Johnson, VP - General Manager		10/3/2019

INSTRUCTIONS FOR FORM 7520-19

This form replaces forms 7520-12 and 7520-14. Use this form only when work is planned or has occurred that affects the well's construction or operation as an injection well, including work on the casing, tubing or packer (or for shallow Class V wells, the subsurface fluid emplacement network). Use one form per injection well. While reports or other information developed by contractors or service companies may be attached, this form must be signed by a responsible entity as described at 40 CFR 144.32. Note: operators closing Class V wells should use Form 7520-17.

NAME, ADDRESS, PHONE AND/OR EMAIL OF PERMITTEE: Enter the name and street address, city/town, state, and ZIP code of the permittee. Also provide an email address (if available) and/or a phone number.

PERMIT OR EPA ID NUMBER: Enter the well identification number or permit number assigned to the well by the EPA or the permitting authority.

API NUMBER: Enter the number assigned by the local jurisdiction (usually a State Oil and Gas Agency) using the American Petroleum Institute standard numbering system.

FULL WELL NAME: Enter the full name of the well or project.

Enter the **STATE** and **COUNTY** where the well is located. For States that do not have counties, use the name of that State's equivalent jurisdiction at a more local level.

WELL LOCATION: Fill in the complete township, range, and section to the nearest quarter-quarter section. A township is north or south of the baseline, and a range is east or west of the principal meridian (e.g., T12N, R34W). Also include the distance, in feet, from the nearest north or south line and nearest east or west line of the quarter-section. Also, enter the **latitude** and **longitude** of the well in decimal degrees, to five or six places if possible; be sure to include a negative sign for the longitude of a well in the Western Hemisphere and a negative sign for the latitude of a well in the Southern Hemisphere.

Enter the **WELL CLASS,** i.e., the class of injection well as defined in 40 CFR 144.6.

TIMING OF THE ACTION: Check ***Notice prior to work*** if the activity has not yet occurred (i.e., is planned). Check ***Report after work*** if the activity described has already occurred. As appropriate, include the date the activity is expected to start or the date the activity was completed. (Note this may not be available, e.g., for a plugging plan submitted with a permit application.)

TYPE OF ACTION: Check the appropriate box to describe the kind of activity being reported. Check ***Well Rework*** for work that was/will be performed on the well after it has already been in operation as an injection well. Check ***Plugging and Abandonment*** to report on plans for or descriptions of final closure/plugging after use as an injection well. Check ***Conversion to a Non-Injection Well*** if the well is to be converted to something other than an injection well.

Provide a **NARRATIVE DESCRIPTION** of the work planned to be performed, or that was performed. The narrative should include a description of the main procedures planned or that occurred during the work activity. A service company report, daily report, or similar document may be attached if it includes all the requested information and is clear and legible.

For well reworks, include the following information: The reason for the well rework; depths of activity; type of activity; changes to injection well configuration, well casing, or cement behind casing; any plug added to the well and its depth; any newly drilled interval and its depth; method(s) to demonstrate that the well has mechanical integrity (as applicable); and any deviations from the approved rework plan (as applicable).

For a well plugging plan, include the following information: Reason for the well plugging; number of plugs placed, and their depths; materials used as plugs (e.g., cast iron bridge plug, cement, cement retainer); method to set plugs; and wait-on-cement times, if any. Also provide one or more cost estimates from an independent firm in the business of plugging and abandoning wells to plug the well as described in the plan.

For well plugging affidavit, include the following information: Reason for the well plugging; number of plugs placed, and their depths; materials used as plugs (e.g., cast iron bridge plug, cement, cement retainer); method to set plugs; wait-on-cement times, if any; and any deviations from the approved plugging plan (if applicable).

For conversion to a non-injection well, include the following information: Depths of activity; type of activity; changes to injection well configuration, well casing, or cement behind casing; any plug added to the well and its depth; any newly drilled interval and its depth; depths of new perforations; and method(s) to demonstrate that the well has mechanical integrity (as applicable).

For all of the above activities, include a well sketch depicting the work, results of well tests/logging performed, service company tickets, and any other available information demonstrating how the work was/is to be performed. Also, specify whether depths are below ground surface, relative to Kelly bushing, etc.

CERTIFICATION: This form must be signed and dated by either: a responsible corporate officer for a corporation, by a general partner for a partnership, by the proprietor of a sole proprietorship, or by a principal executive or ranking elected official for a public agency.

PAPERWORK REDUCTION ACT NOTICE: The public reporting and recordkeeping burden for this collection of information is estimated to average between 6.0 and 7.9 hours per response, depending on the injection well class. Burden means the total time, effort, or financial resource expended by persons to generate, maintain, retain, or disclose or provide information to or for a Federal Agency. This includes the time needed to review instructions; develop, acquire, install, and utilize technology and systems for the purposes of collecting, validating, and verifying information, processing and maintaining information, and disclosing and providing information; adjust the existing ways to comply with any previously applicable instructions and requirements; train personnel to be able to respond to the collection of information; search data sources; complete and review the collection of information; and, transmit or otherwise disclose the information. An agency may not conduct or sponsor, and a person is not required to respond to, a collection of information unless it displays a currently valid OMB control number. Send comments on the Agency's need for this information, the accuracy of the provided burden estimates, and any suggested methods for minimizing respondent burden, including the use of automated collection techniques to Director, Collection Strategies Division, U.S. Environmental Protection Agency (2822), 1200 Pennsylvania Ave., NW., Washington, D.C. 20460. Include the OMB control number in any correspondence. Do not send the completed forms to this address.

Saved by: MNICHOLLS Printed: 7/25/2019 7:20 PM Sheet: HA-FIG-A-L(2)
\\HALEYALDRICH.COM\SHARE\PHX_COMMON\PROJECTS\FLORENCE COPPER\132473 FLORENCE GROUNDWATER PERMITTING\CAD\132473_000-OBSERVATION_WELL_CONSTRUCTION DIAGRAM.DWG

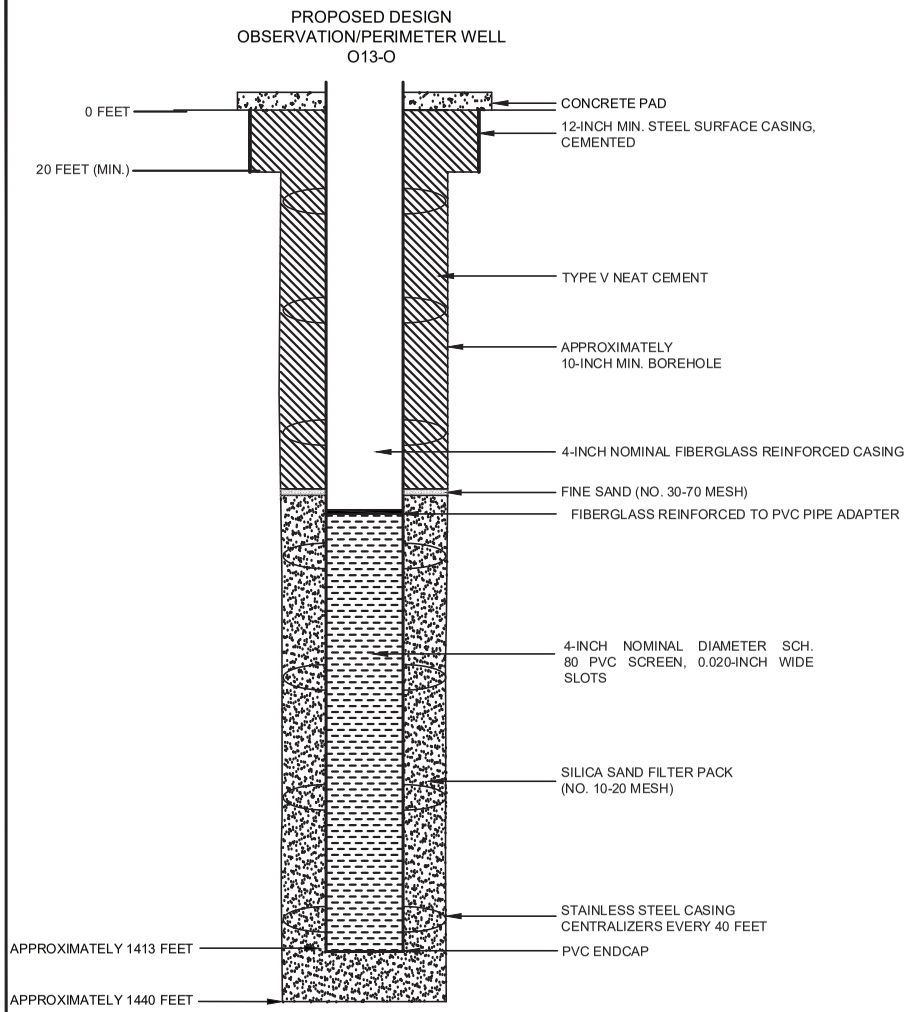

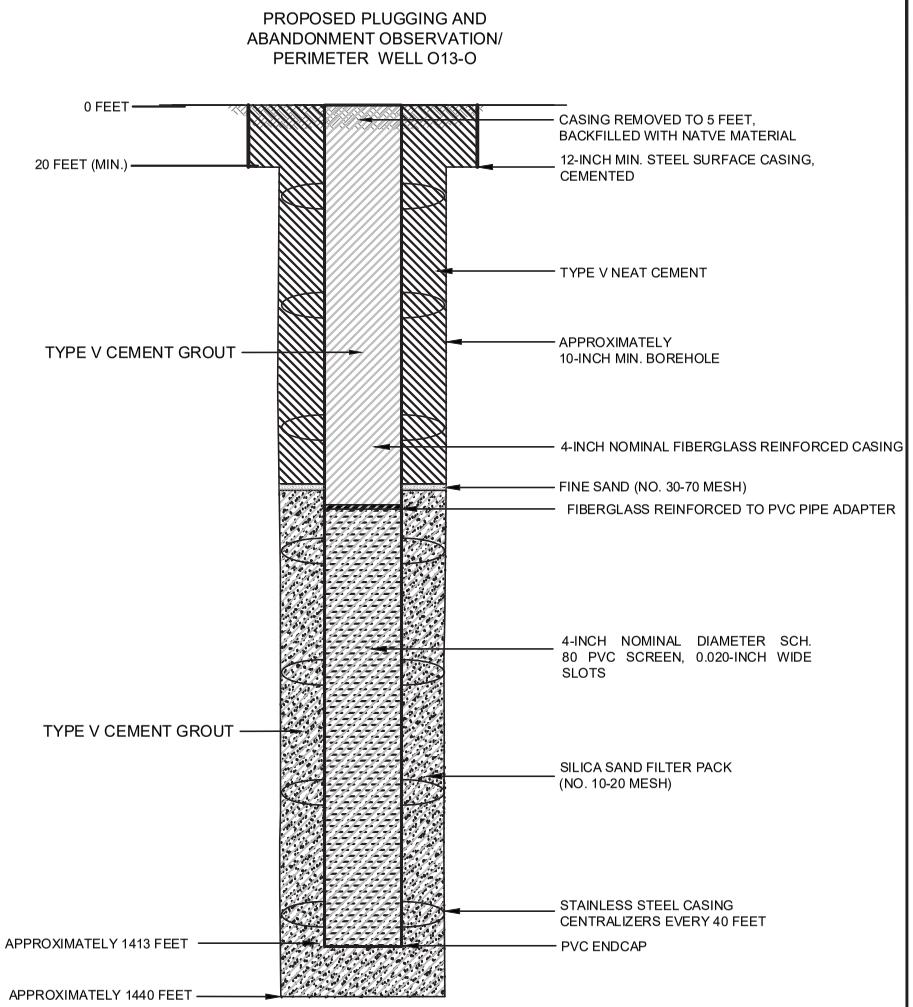

NOTES

1. WELL DESIGN DETAILS ARE BASED ON CORE HOLE AND WELL LOG RECORDS.

HALEY ALDRICH

FLORENCE COPPER, INC.
FLORENCE, ARIZONA

ABANDONMENT SCHEMATIC
OBSERVATION/PERIMETER
WELL O13-O

SEPTEMBER 2019
SCALE: AS SHOWN

FIGURE 1

OMB No. 2040-0042 Approval Expires 4/30/2022

United States Environmental Protection Agency

WELL REWORK RECORD, PLUGGING AND ABANDONMENT PLAN, OR PLUGGING AND ABANDONMENT AFFIDAVIT

Name and Address, Phone Number and/or Email of Permittee

Florence Copper Project
1575 W Hunt Hwy,
Florence, AZ 85132

Permit or EPA ID Number	API Number	Full Well Name
R9UIC-AZ3-FY11-1		O15-O

State	County
Arizona	Pinal

Locate well in two directions from nearest lines of quarter section and drilling unit

Latitude 33.04819175

Longitude -111.4352662

Surface Location

SW **1/4 of** SW **1/4 of Section** 28 **Township** 4S **Range** 9E

_____ **ft. from (N/S)** _____ **Line of quarter section**

_____ **ft. from (E/W)** _____ **Line of quarter section.**

Well Class	Timing of Action (pick one)	Type of Action (pick one)
☐ Class I ☐ Class II ☑ Class III ☐ Class V	☑ Notice Prior to Work Date Expected to Commence March 2021 ☐ Report After Work Date Work Ended	☐ Well Rework ☑ Plugging and Abandonment ☐ Conversion to a Non-Injection Well

Provide a narrative description of the work planned to be performed, or that was performed. Use additional pages as necessary. See instructions.

A workover rig capable of performing the required abandonment operations at the required depths will be moved in and set up over the well. The well casing will be inspected to determine the depth to which the well remains open and if any obstructions are present in the casing; the presence and condition of any existing surface casing will also be documented. If necessary, the well casing will be cleaned out to the bottom of the deepest screen or perforation to enable placement of cement seals.

If surface casing is present, an attempt will be made to remove it. If removal of the surface casing is not feasible, it will be left in the hole and perforated as needed to allow an annular seal to be placed to a depth of at least 25 feet bgs. In areas of agricultural use, the surface casing will be cut at least 5 feet bgs and removed.

If the surface casing cannot be removed, it will be perforated from at least 20 feet below the bedrock-LBFU contact to at least 20 feet above the contact; from at least 20 feet below the base of the MFGU to at least 20 feet above the top of the MFGU; and from at least 25 feet bgs to 5 feet bgs.

A tremie pipe will be used to place Type V cement in the open well from the bottom of the well casing to the top of the well casing. Cement retainers, as described above, will be used to force cement grout into the annulus and behind perforated screen intervals, as necessary.

If the well casing has been obstructed, as much cement as possible will be placed from 100 feet below the LBFU-bedrock contact to the top of the casing.

The volume of Type V cement will be recorded and will not be less than the estimated volume of material required to fill each interval. All cement grout will consist of Type V cement, or equivalent approved in accordance with the UIC Permit.

Certification

I certify under the penalty of law that I have personally examined and am familiar with the information submitted in this document and all attachments and that, based on my inquiry of those individuals immediately responsible for obtaining the information, I believe that the information is true, accurate, and complete. I am aware that there are significant penalties for submitting false information, including the possibliity of fine and imprisonment. (Ref. 40 CFR § 144.32)

Name and Official Title *(Please type or print)*	Signature	Date Signed
Dan Johnson, VP - General Manager		10/3/2019

INSTRUCTIONS FOR FORM 7520-19

This form replaces forms 7520-12 and 7520-14. Use this form only when work is planned or has occurred that affects the well's construction or operation as an injection well, including work on the casing, tubing or packer (or for shallow Class V wells, the subsurface fluid emplacement network). Use one form per injection well. While reports or other information developed by contractors or service companies may be attached, this form must be signed by a responsible entity as described at 40 CFR 144.32. Note: operators closing Class V wells should use Form 7520-17.

NAME, ADDRESS, PHONE AND/OR EMAIL OF PERMITTEE: Enter the name and street address, city/town, state, and ZIP code of the permittee. Also provide an email address (if available) and/or a phone number.

PERMIT OR EPA ID NUMBER: Enter the well identification number or permit number assigned to the well by the EPA or the permitting authority.

API NUMBER: Enter the number assigned by the local jurisdiction (usually a State Oil and Gas Agency) using the American Petroleum Institute standard numbering system.

FULL WELL NAME: Enter the full name of the well or project.

Enter the **STATE** and **COUNTY** where the well is located. For States that do not have counties, use the name of that State's equivalent jurisdiction at a more local level.

WELL LOCATION: Fill in the complete township, range, and section to the nearest quarter-quarter section. A township is north or south of the baseline, and a range is east or west of the principal meridian (e.g., T12N, R34W). Also include the distance, in feet, from the nearest north or south line and nearest east or west line of the quarter-section. Also, enter the **latitude** and **longitude** of the well in decimal degrees, to five or six places if possible; be sure to include a negative sign for the longitude of a well in the Western Hemisphere and a negative sign for the latitude of a well in the Southern Hemisphere.

Enter the **WELL CLASS,** i.e., the class of injection well as defined in 40 CFR 144.6.

TIMING OF THE ACTION: Check ***Notice prior to work*** if the activity has not yet occurred (i.e., is planned). Check ***Report after work*** if the activity described has already occurred. As appropriate, include the date the activity is expected to start or the date the activity was completed. (Note this may not be available, e.g., for a plugging plan submitted with a permit application.)

TYPE OF ACTION: Check the appropriate box to describe the kind of activity being reported. Check ***Well Rework*** for work that was/will be performed on the well after it has already been in operation as an injection well. Check ***Plugging and Abandonment*** to report on plans for or descriptions of final closure/plugging after use as an injection well. Check ***Conversion to a Non-Injection Well*** if the well is to be converted to something other than an injection well.

Provide a **NARRATIVE DESCRIPTION** of the work planned to be performed, or that was performed. The narrative should include a description of the main procedures planned or that occurred during the work activity. A service company report, daily report, or similar document may be attached if it includes all the requested information and is clear and legible.

For well reworks, include the following information: The reason for the well rework; depths of activity; type of activity; changes to injection well configuration, well casing, or cement behind casing; any plug added to the well and its depth; any newly drilled interval and its depth; method(s) to demonstrate that the well has mechanical integrity (as applicable); and any deviations from the approved rework plan (as applicable).

For a well plugging plan, include the following information: Reason for the well plugging; number of plugs placed, and their depths; materials used as plugs (e.g., cast iron bridge plug, cement, cement retainer); method to set plugs; and wait-on-cement times, if any. Also provide one or more cost estimates from an independent firm in the business of plugging and abandoning wells to plug the well as described in the plan.

For well plugging affidavit, include the following information: Reason for the well plugging; number of plugs placed, and their depths; materials used as plugs (e.g., cast iron bridge plug, cement, cement retainer); method to set plugs; wait-on-cement times, if any; and any deviations from the approved plugging plan (if applicable).

For conversion to a non-injection well, include the following information: Depths of activity; type of activity; changes to injection well configuration, well casing, or cement behind casing; any plug added to the well and its depth; any newly drilled interval and its depth; depths of new perforations; and method(s) to demonstrate that the well has mechanical integrity (as applicable).

For all of the above activities, include a well sketch depicting the work, results of well tests/logging performed, service company tickets, and any other available information demonstrating how the work was/is to be performed. Also, specify whether depths are below ground surface, relative to Kelly bushing, etc.

CERTIFICATION: This form must be signed and dated by either: a responsible corporate officer for a corporation, by a general partner for a partnership, by the proprietor of a sole proprietorship, or by a principal executive or ranking elected official for a public agency.

PAPERWORK REDUCTION ACT NOTICE: The public reporting and recordkeeping burden for this collection of information is estimated to average between 6.0 and 7.9 hours per response, depending on the injection well class. Burden means the total time, effort, or financial resource expended by persons to generate, maintain, retain, or disclose or provide information to or for a Federal Agency. This includes the time needed to review instructions; develop, acquire, install, and utilize technology and systems for the purposes of collecting, validating, and verifying information, processing and maintaining information, and disclosing and providing information; adjust the existing ways to comply with any previously applicable instructions and requirements; train personnel to be able to respond to the collection of information; search data sources; complete and review the collection of information; and, transmit or otherwise disclose the information. An agency may not conduct or sponsor, and a person is not required to respond to, a collection of information unless it displays a currently valid OMB control number. Send comments on the Agency's need for this information, the accuracy of the provided burden estimates, and any suggested methods for minimizing respondent burden, including the use of automated collection techniques to Director, Collection Strategies Division, U.S. Environmental Protection Agency (2822), 1200 Pennsylvania Ave., NW., Washington, D.C. 20460. Include the OMB control number in any correspondence. Do not send the completed forms to this address.

Saved by: MNICHOLLS Printed: 7/25/2019 7:20 PM Sheet: HA-FIG-A-L(2)
\\HALEYALDRICH.COM\SHARE\PHX_COMMON\PROJECTS\FLORENCE COPPER\132473 FLORENCE GROUNDWATER PERMITTING\CAD\132473_000-OBSERVATION_WELL_CONSTRUCTION DIAGRAM.DWG

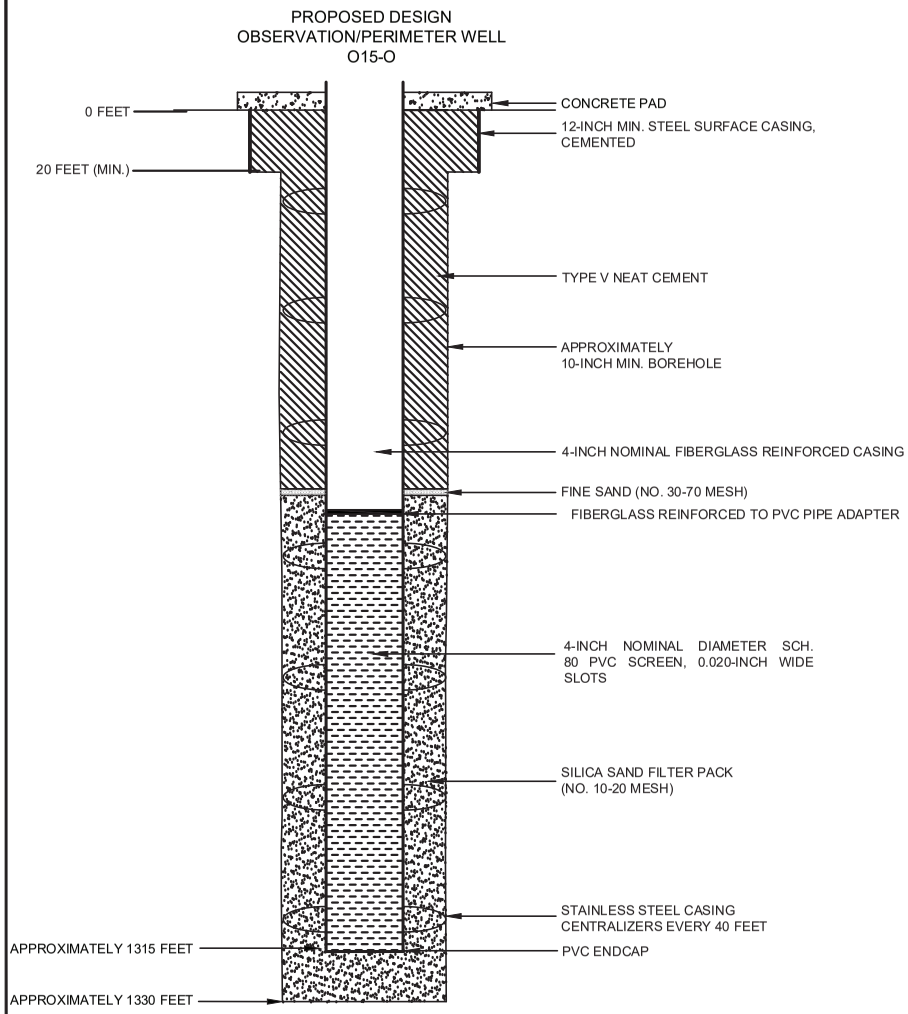

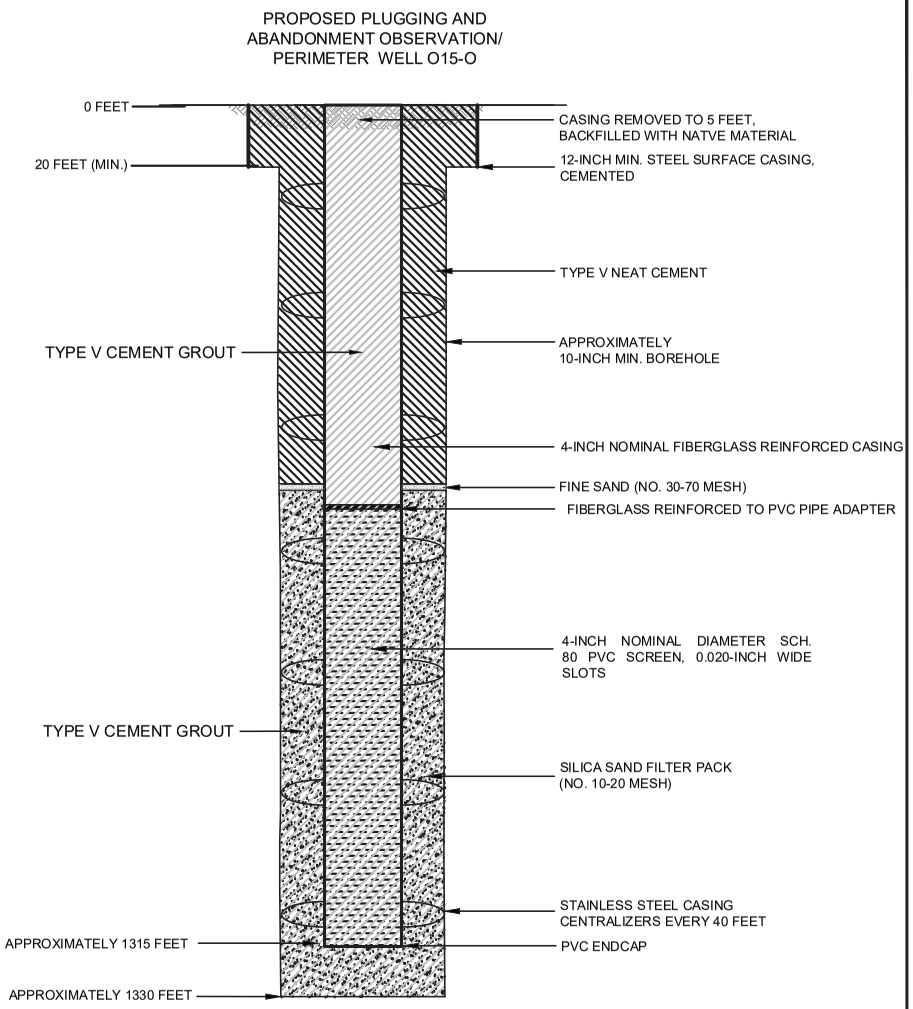

NOTES

1. WELL DESIGN DETAILS ARE BASED ON CORE HOLE AND WELL LOG RECORDS.

HALEY ALDRICH

FLORENCE COPPER, INC.
FLORENCE, ARIZONA

ABANDONMENT SCHEMATIC
OBSERVATION/PERIMETER
WELL O15-O

SEPTEMBER 2019
SCALE: AS SHOWN

FIGURE 1

OMB No. 2040-0042 Approval Expires 4/30/2022

United States Environmental Protection Agency

WELL REWORK RECORD, PLUGGING AND ABANDONMENT PLAN, OR PLUGGING AND ABANDONMENT AFFIDAVIT

Name and Address, Phone Number and/or Email of Permittee

Florence Copper Project
1575 W Hunt Hwy,
Florence, AZ 85132

Permit or EPA ID Number	API Number	Full Well Name
R9UIC-AZ3-FY11-1		O19-GL

State	County
Arizona	Pinal

Locate well in two directions from nearest lines of quarter section and drilling unit

Latitude 33.05363133

Surface Location

SE **1/4 of** NW **1/4 of Section** 28 **Township** 4S **Range** 9E

Longitude -111.4328698

_____ **ft. from (N/S)** _____ **Line of quarter section**

_____ **ft. from (E/W)** _____ **Line of quarter section.**

Well Class	Timing of Action (pick one)	Type of Action (pick one)
☐ Class I ☐ Class II ☑ Class III ☐ Class V	☑ Notice Prior to Work Date Expected to Commence March 2021 ☐ Report After Work Date Work Ended	☐ Well Rework ☑ Plugging and Abandonment ☐ Conversion to a Non-Injection Well

Provide a narrative description of the work planned to be performed, or that was performed. Use additional pages as necessary. See instructions.

A workover rig capable of performing the required abandonment operations at the required depths will be moved in and set up over the well. The well casing will be inspected to determine the depth to which the well remains open and if any obstructions are present in the casing; the presence and condition of any existing surface casing will also be documented. If necessary, the well casing will be cleaned out to the bottom of the deepest screen or perforation to enable placement of cement seals.

If surface casing is present, an attempt will be made to remove it. If removal of the surface casing is not feasible, it will be left in the hole and perforated as needed to allow an annular seal to be placed to a depth of at least 25 feet bgs. In areas of agricultural use, the surface casing will be cut at least 5 feet bgs and removed.

If the surface casing cannot be removed, it will be perforated from at least 20 feet below the bedrock-LBFU contact to at least 20 feet above the contact; from at least 20 feet below the base of the MFGU to at least 20 feet above the top of the MFGU; and from at least 25 feet bgs to 5 feet bgs.

A tremie pipe will be used to place Type V cement in the open well from the bottom of the well casing to the top of the well casing. Cement retainers, as described above, will be used to force cement grout into the annulus and behind perforated screen intervals, as necessary.

If the well casing has been obstructed, as much cement as possible will be placed from 100 feet below the LBFU-bedrock contact to the top of the casing.

The volume of Type V cement will be recorded and will not be less than the estimated volume of material required to fill each interval. All cement grout will consist of Type V cement, or equivalent approved in accordance with the UIC Permit.

Certification

I certify under the penalty of law that I have personally examined and am familiar with the information submitted in this document and all attachments and that, based on my inquiry of those individuals immediately responsible for obtaining the information, I believe that the information is true, accurate, and complete. I am aware that there are significant penalties for submitting false information, including the possibliity of fine and imprisonment. (Ref. 40 CFR § 144.32)

Name and Official Title *(Please type or print)*	Signature	Date Signed
Dan Johnson, VP - General Manager		10/3/2019

INSTRUCTIONS FOR FORM 7520-19

This form replaces forms 7520-12 and 7520-14. Use this form only when work is planned or has occurred that affects the well's construction or operation as an injection well, including work on the casing, tubing or packer (or for shallow Class V wells, the subsurface fluid emplacement network). Use one form per injection well. While reports or other information developed by contractors or service companies may be attached, this form must be signed by a responsible entity as described at 40 CFR 144.32. Note: operators closing Class V wells should use Form 7520-17.

NAME, ADDRESS, PHONE AND/OR EMAIL OF PERMITTEE: Enter the name and street address, city/town, state, and ZIP code of the permittee. Also provide an email address (if available) and/or a phone number.

PERMIT OR EPA ID NUMBER: Enter the well identification number or permit number assigned to the well by the EPA or the permitting authority.

API NUMBER: Enter the number assigned by the local jurisdiction (usually a State Oil and Gas Agency) using the American Petroleum Institute standard numbering system.

FULL WELL NAME: Enter the full name of the well or project.

Enter the **STATE** and **COUNTY** where the well is located. For States that do not have counties, use the name of that State's equivalent jurisdiction at a more local level.

WELL LOCATION: Fill in the complete township, range, and section to the nearest quarter-quarter section. A township is north or south of the baseline, and a range is east or west of the principal meridian (e.g., T12N, R34W). Also include the distance, in feet, from the nearest north or south line and nearest east or west line of the quarter-section. Also, enter the **latitude** and **longitude** of the well in decimal degrees, to five or six places if possible; be sure to include a negative sign for the longitude of a well in the Western Hemisphere and a negative sign for the latitude of a well in the Southern Hemisphere.

Enter the **WELL CLASS,** i.e., the class of injection well as defined in 40 CFR 144.6.

TIMING OF THE ACTION: Check ***Notice prior to work*** if the activity has not yet occurred (i.e., is planned). Check ***Report after work*** if the activity described has already occurred. As appropriate, include the date the activity is expected to start or the date the activity was completed. (Note this may not be available, e.g., for a plugging plan submitted with a permit application.)

TYPE OF ACTION: Check the appropriate box to describe the kind of activity being reported. Check ***Well Rework*** for work that was/will be performed on the well after it has already been in operation as an injection well. Check ***Plugging and Abandonment*** to report on plans for or descriptions of final closure/plugging after use as an injection well. Check ***Conversion to a Non-Injection Well*** if the well is to be converted to something other than an injection well.

Provide a **NARRATIVE DESCRIPTION** of the work planned to be performed, or that was performed. The narrative should include a description of the main procedures planned or that occurred during the work activity. A service company report, daily report, or similar document may be attached if it includes all the requested information and is clear and legible.

For well reworks, include the following information: The reason for the well rework; depths of activity; type of activity; changes to injection well configuration, well casing, or cement behind casing; any plug added to the well and its depth; any newly drilled interval and its depth; method(s) to demonstrate that the well has mechanical integrity (as applicable); and any deviations from the approved rework plan (as applicable).

For a well plugging plan, include the following information: Reason for the well plugging; number of plugs placed, and their depths; materials used as plugs (e.g., cast iron bridge plug, cement, cement retainer); method to set plugs; and wait-on-cement times, if any. Also provide one or more cost estimates from an independent firm in the business of plugging and abandoning wells to plug the well as described in the plan.

For well plugging affidavit, include the following information: Reason for the well plugging; number of plugs placed, and their depths; materials used as plugs (e.g., cast iron bridge plug, cement, cement retainer); method to set plugs; wait-on-cement times, if any; and any deviations from the approved plugging plan (if applicable).

For conversion to a non-injection well, include the following information: Depths of activity; type of activity; changes to injection well configuration, well casing, or cement behind casing; any plug added to the well and its depth; any newly drilled interval and its depth; depths of new perforations; and method(s) to demonstrate that the well has mechanical integrity (as applicable).

For all of the above activities, include a well sketch depicting the work, results of well tests/logging performed, service company tickets, and any other available information demonstrating how the work was/is to be performed. Also, specify whether depths are below ground surface, relative to Kelly bushing, etc.

CERTIFICATION: This form must be signed and dated by either: a responsible corporate officer for a corporation, by a general partner for a partnership, by the proprietor of a sole proprietorship, or by a principal executive or ranking elected official for a public agency.

PAPERWORK REDUCTION ACT NOTICE: The public reporting and recordkeeping burden for this collection of information is estimated to average between 6.0 and 7.9 hours per response, depending on the injection well class. Burden means the total time, effort, or financial resource expended by persons to generate, maintain, retain, or disclose or provide information to or for a Federal Agency. This includes the time needed to review instructions; develop, acquire, install, and utilize technology and systems for the purposes of collecting, validating, and verifying information, processing and maintaining information, and disclosing and providing information; adjust the existing ways to comply with any previously applicable instructions and requirements; train personnel to be able to respond to the collection of information; search data sources; complete and review the collection of information; and, transmit or otherwise disclose the information. An agency may not conduct or sponsor, and a person is not required to respond to, a collection of information unless it displays a currently valid OMB control number. Send comments on the Agency's need for this information, the accuracy of the provided burden estimates, and any suggested methods for minimizing respondent burden, including the use of automated collection techniques to Director, Collection Strategies Division, U.S. Environmental Protection Agency (2822), 1200 Pennsylvania Ave., NW., Washington, D.C. 20460. Include the OMB control number in any correspondence. Do not send the completed forms to this address.

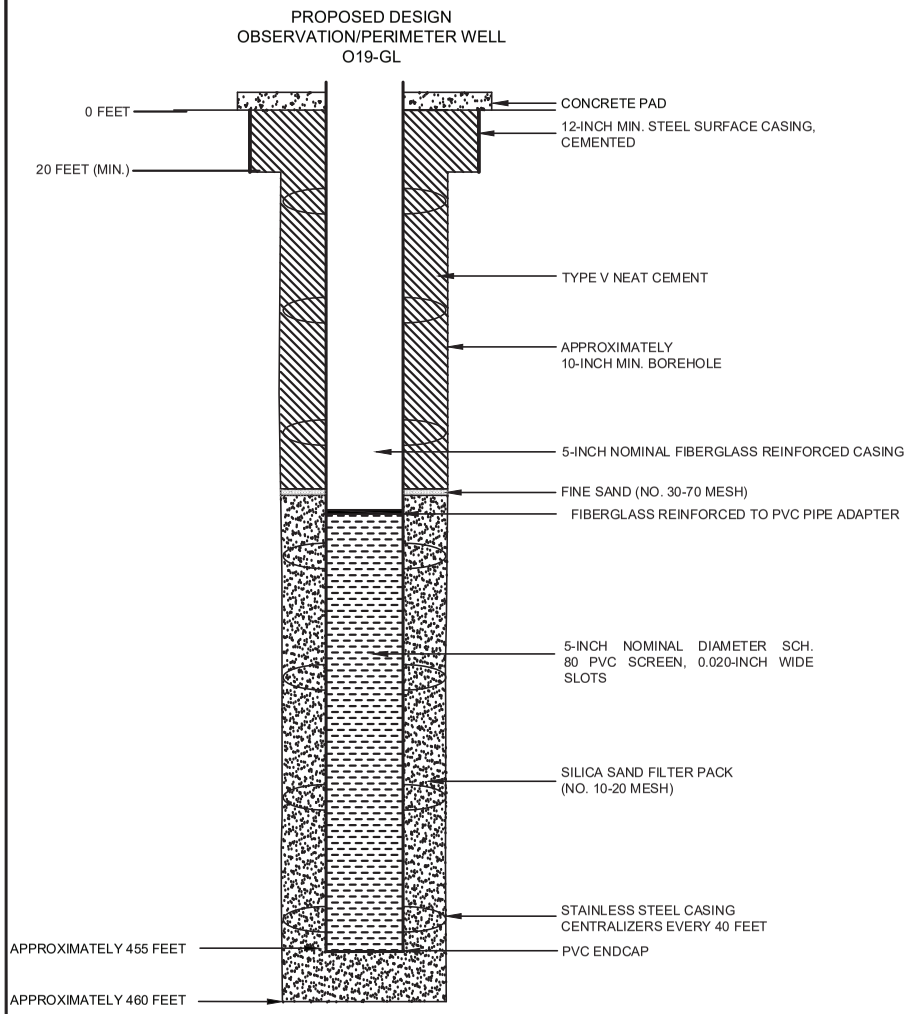

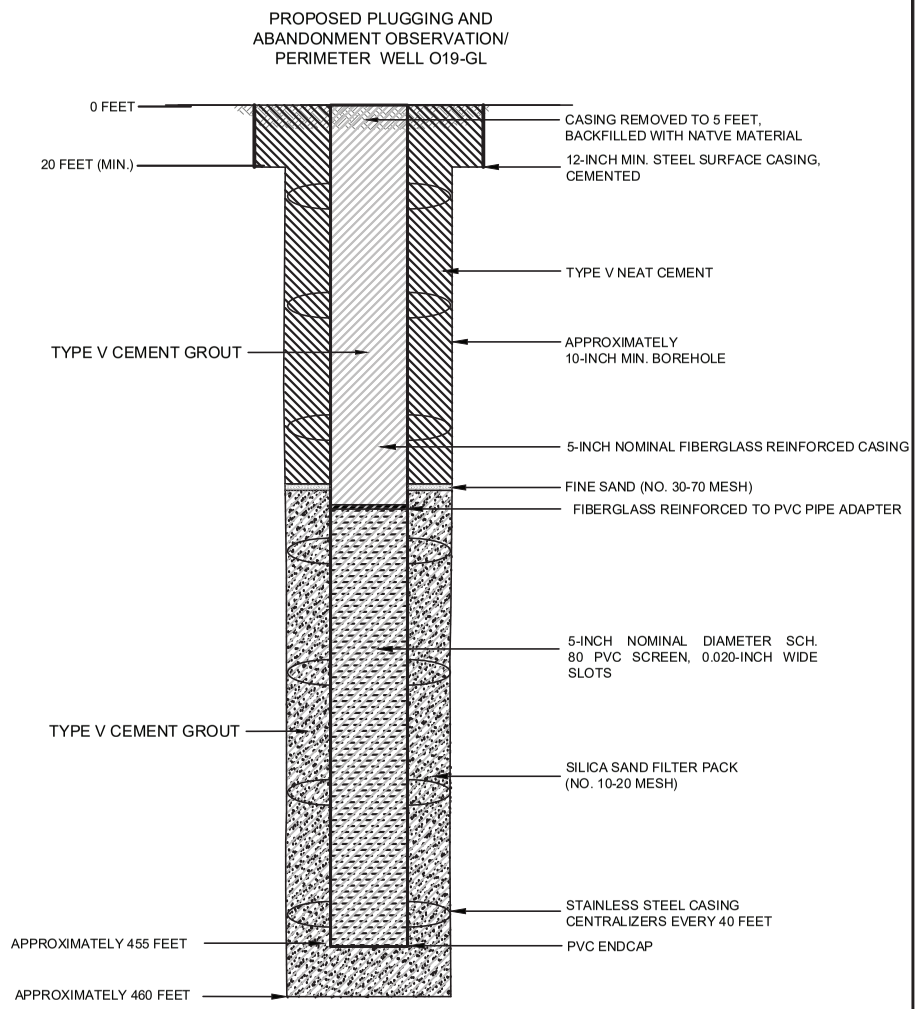

NOTES

1. WELL DESIGN DETAILS ARE BASED ON CORE HOLE AND WELL LOG RECORDS.

HALEY ALDRICH

FLORENCE COPPER, INC.
FLORENCE, ARIZONA

ABANDONMENT SCHEMATIC
OBSERVATION/PERIMETER
WELL O19-GL

SEPTEMBER 2019
SCALE: AS SHOWN

FIGURE 1

OMB No. 2040-0042 Approval Expires 4/30/2022

United States Environmental Protection Agency

WELL REWORK RECORD, PLUGGING AND ABANDONMENT PLAN, OR PLUGGING AND ABANDONMENT AFFIDAVIT

Name and Address, Phone Number and/or Email of Permittee

Florence Copper Project
1575 W Hunt Hwy,
Florence, AZ 85132

Permit or EPA ID Number	API Number	Full Well Name
R9UIC-AZ3-FY11-1		O19-O

State	County
Arizona	Pinal

Locate well in two directions from nearest lines of quarter section and drilling unit

Latitude 33.05360528

Longitude -111.432459

Surface Location

SE **1/4 of** NW **1/4 of Section** 28 **Township** 4S **Range** 9E

_____ **ft. from (N/S)** _____ **Line of quarter section**

_____ **ft. from (E/W)** _____ **Line of quarter section.**

Well Class	Timing of Action (pick one)	Type of Action (pick one)
☐ Class I ☐ Class II ☑ Class III ☐ Class V	☑ Notice Prior to Work Date Expected to Commence March 2021 ☐ Report After Work Date Work Ended	☐ Well Rework ☑ Plugging and Abandonment ☐ Conversion to a Non-Injection Well

Provide a narrative description of the work planned to be performed, or that was performed. Use additional pages as necessary. See instructions.

A workover rig capable of performing the required abandonment operations at the required depths will be moved in and set up over the well. The well casing will be inspected to determine the depth to which the well remains open and if any obstructions are present in the casing; the presence and condition of any existing surface casing will also be documented. If necessary, the well casing will be cleaned out to the bottom of the deepest screen or perforation to enable placement of cement seals.

If surface casing is present, an attempt will be made to remove it. If removal of the surface casing is not feasible, it will be left in the hole and perforated as needed to allow an annular seal to be placed to a depth of at least 25 feet bgs. In areas of agricultural use, the surface casing will be cut at least 5 feet bgs and removed.

If the surface casing cannot be removed, it will be perforated from at least 20 feet below the bedrock-LBFU contact to at least 20 feet above the contact; from at least 20 feet below the base of the MFGU to at least 20 feet above the top of the MFGU; and from at least 25 feet bgs to 5 feet bgs.

A tremie pipe will be used to place Type V cement in the open well from the bottom of the well casing to the top of the well casing. Cement retainers, as described above, will be used to force cement grout into the annulus and behind perforated screen intervals, as necessary.

If the well casing has been obstructed, as much cement as possible will be placed from 100 feet below the LBFU-bedrock contact to the top of the casing.

The volume of Type V cement will be recorded and will not be less than the estimated volume of material required to fill each interval. All cement grout will consist of Type V cement, or equivalent approved in accordance with the UIC Permit.

Certification

I certify under the penalty of law that I have personally examined and am familiar with the information submitted in this document and all attachments and that, based on my inquiry of those individuals immediately responsible for obtaining the information, I believe that the information is true, accurate, and complete. I am aware that there are significant penalties for submitting false information, including the possibliity of fine and imprisonment. (Ref. 40 CFR § 144.32)

Name and Official Title *(Please type or print)*	Signature	Date Signed
Dan Johnson, VP - General Manager		10/3/2019

INSTRUCTIONS FOR FORM 7520-19

This form replaces forms 7520-12 and 7520-14. Use this form only when work is planned or has occurred that affects the well's construction or operation as an injection well, including work on the casing, tubing or packer (or for shallow Class V wells, the subsurface fluid emplacement network). Use one form per injection well. While reports or other information developed by contractors or service companies may be attached, this form must be signed by a responsible entity as described at 40 CFR 144.32. Note: operators closing Class V wells should use Form 7520-17.

NAME, ADDRESS, PHONE AND/OR EMAIL OF PERMITTEE: Enter the name and street address, city/town, state, and ZIP code of the permittee. Also provide an email address (if available) and/or a phone number.

PERMIT OR EPA ID NUMBER: Enter the well identification number or permit number assigned to the well by the EPA or the permitting authority.

API NUMBER: Enter the number assigned by the local jurisdiction (usually a State Oil and Gas Agency) using the American Petroleum Institute standard numbering system.

FULL WELL NAME: Enter the full name of the well or project.

Enter the **STATE** and **COUNTY** where the well is located. For States that do not have counties, use the name of that State's equivalent jurisdiction at a more local level.

WELL LOCATION: Fill in the complete township, range, and section to the nearest quarter-quarter section. A township is north or south of the baseline, and a range is east or west of the principal meridian (e.g., T12N, R34W). Also include the distance, in feet, from the nearest north or south line and nearest east or west line of the quarter-section. Also, enter the **latitude** and **longitude** of the well in decimal degrees, to five or six places if possible; be sure to include a negative sign for the longitude of a well in the Western Hemisphere and a negative sign for the latitude of a well in the Southern Hemisphere.

Enter the **WELL CLASS,** i.e., the class of injection well as defined in 40 CFR 144.6.

TIMING OF THE ACTION: Check ***Notice prior to work*** if the activity has not yet occurred (i.e., is planned). Check ***Report after work*** if the activity described has already occurred. As appropriate, include the date the activity is expected to start or the date the activity was completed. (Note this may not be available, e.g., for a plugging plan submitted with a permit application.)

TYPE OF ACTION: Check the appropriate box to describe the kind of activity being reported. Check ***Well Rework*** for work that was/will be performed on the well after it has already been in operation as an injection well. Check ***Plugging and Abandonment*** to report on plans for or descriptions of final closure/plugging after use as an injection well. Check ***Conversion to a Non-Injection Well*** if the well is to be converted to something other than an injection well.

Provide a **NARRATIVE DESCRIPTION** of the work planned to be performed, or that was performed. The narrative should include a description of the main procedures planned or that occurred during the work activity. A service company report, daily report, or similar document may be attached if it includes all the requested information and is clear and legible.

For well reworks, include the following information: The reason for the well rework; depths of activity; type of activity; changes to injection well configuration, well casing, or cement behind casing; any plug added to the well and its depth; any newly drilled interval and its depth; method(s) to demonstrate that the well has mechanical integrity (as applicable); and any deviations from the approved rework plan (as applicable).

For a well plugging plan, include the following information: Reason for the well plugging; number of plugs placed, and their depths; materials used as plugs (e.g., cast iron bridge plug, cement, cement retainer); method to set plugs; and wait-on-cement times, if any. Also provide one or more cost estimates from an independent firm in the business of plugging and abandoning wells to plug the well as described in the plan.

For well plugging affidavit, include the following information: Reason for the well plugging; number of plugs placed, and their depths; materials used as plugs (e.g., cast iron bridge plug, cement, cement retainer); method to set plugs; wait-on-cement times, if any; and any deviations from the approved plugging plan (if applicable).

For conversion to a non-injection well, include the following information: Depths of activity; type of activity; changes to injection well configuration, well casing, or cement behind casing; any plug added to the well and its depth; any newly drilled interval and its depth; depths of new perforations; and method(s) to demonstrate that the well has mechanical integrity (as applicable).

For all of the above activities, include a well sketch depicting the work, results of well tests/logging performed, service company tickets, and any other available information demonstrating how the work was/is to be performed. Also, specify whether depths are below ground surface, relative to Kelly bushing, etc.

CERTIFICATION: This form must be signed and dated by either: a responsible corporate officer for a corporation, by a general partner for a partnership, by the proprietor of a sole proprietorship, or by a principal executive or ranking elected official for a public agency.

PAPERWORK REDUCTION ACT NOTICE: The public reporting and recordkeeping burden for this collection of information is estimated to average between 6.0 and 7.9 hours per response, depending on the injection well class. Burden means the total time, effort, or financial resource expended by persons to generate, maintain, retain, or disclose or provide information to or for a Federal Agency. This includes the time needed to review instructions; develop, acquire, install, and utilize technology and systems for the purposes of collecting, validating, and verifying information, processing and maintaining information, and disclosing and providing information; adjust the existing ways to comply with any previously applicable instructions and requirements; train personnel to be able to respond to the collection of information; search data sources; complete and review the collection of information; and, transmit or otherwise disclose the information. An agency may not conduct or sponsor, and a person is not required to respond to, a collection of information unless it displays a currently valid OMB control number. Send comments on the Agency's need for this information, the accuracy of the provided burden estimates, and any suggested methods for minimizing respondent burden, including the use of automated collection techniques to Director, Collection Strategies Division, U.S. Environmental Protection Agency (2822), 1200 Pennsylvania Ave., NW., Washington, D.C. 20460. Include the OMB control number in any correspondence. Do not send the completed forms to this address.

Saved by: MNICHOLLS Printed: 7/25/2019 7:20 PM Sheet: HA-FIG-A-L(2)
\\HALEYALDRICH.COM\SHARE\PHX_COMMON\PROJECTS\FLORENCE COPPER\132473 FLORENCE GROUNDWATER PERMITTING\CAD\132473_000-OBSERVATION_WELL_CONSTRUCTION DIAGRAM.DWG

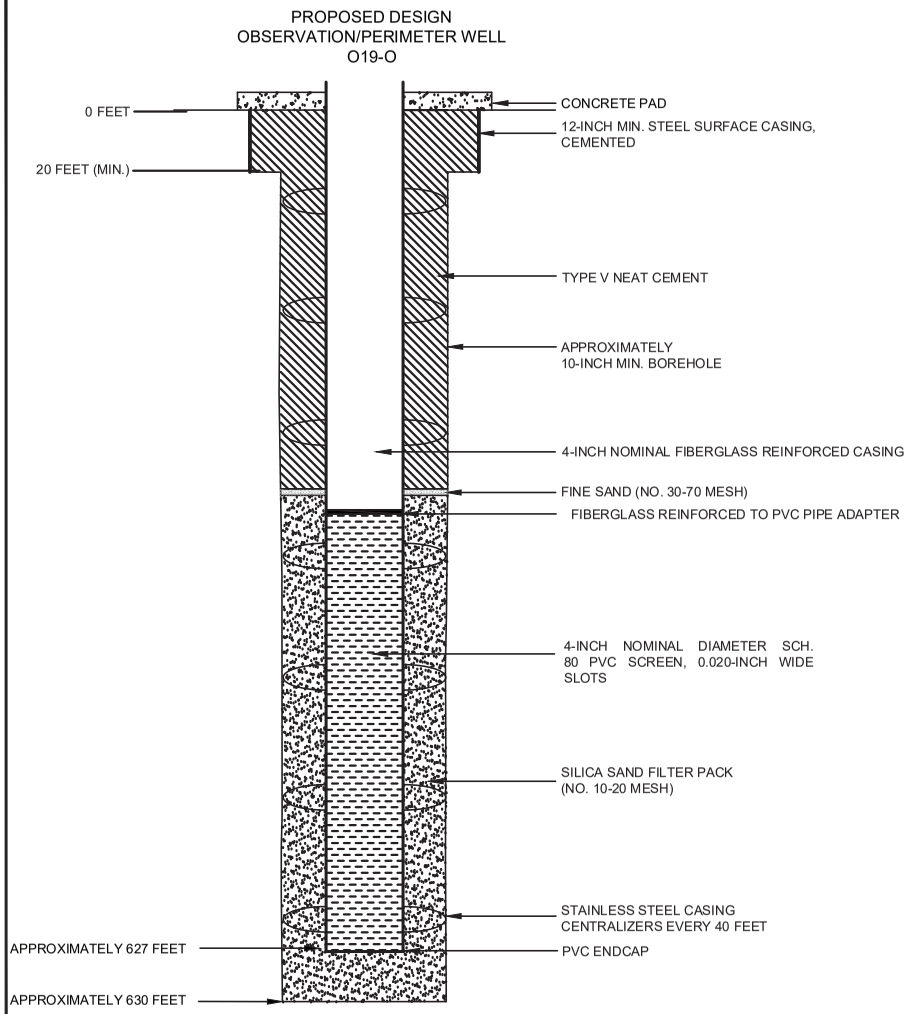

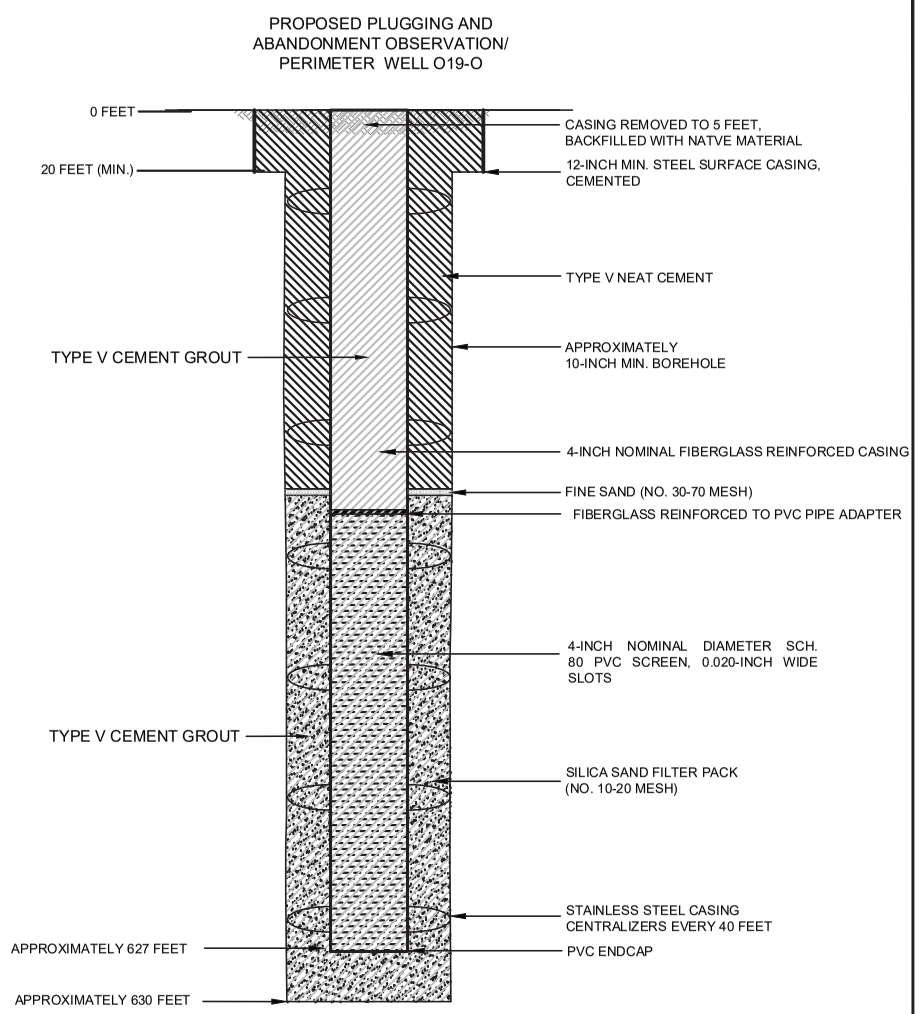

NOTES

1. WELL DESIGN DETAILS ARE BASED ON CORE HOLE AND WELL LOG RECORDS.

HALEY ALDRICH

FLORENCE COPPER, INC.
FLORENCE, ARIZONA

ABANDONMENT SCHEMATIC
OBSERVATION/PERIMETER
WELL O19-O

SEPTEMBER 2019
SCALE: AS SHOWN

FIGURE 1

OMB No. 2040-0042 Approval Expires 4/30/2022

United States Environmental Protection Agency

EPA

WELL REWORK RECORD, PLUGGING AND ABANDONMENT PLAN, OR PLUGGING AND ABANDONMENT AFFIDAVIT

Name and Address, Phone Number and/or Email of Permittee

Florence Copper Project
1575 W Hunt Hwy,
Florence, AZ 85132

Permit or EPA ID Number	API Number	Full Well Name
R9UIC-AZ3-FY11-1		O28.1-O

State	County
Arizona	Pinal

Locate well in two directions from nearest lines of quarter section and drilling unit

Latitude 33.04890302

Longitude -111.4237763

Surface Location

SE **1/4 of** SE **1/4 of Section** 28 **Township** 4S **Range** 9E

_____ **ft. from (N/S)** _____ **Line of quarter section**

_____ **ft. from (E/W)** _____ **Line of quarter section.**

Well Class	Timing of Action (pick one)	Type of Action (pick one)
☐ Class I ☐ Class II ☑ Class III ☐ Class V	☑ Notice Prior to Work Date Expected to Commence March 2021 ☐ Report After Work Date Work Ended	☐ Well Rework ☑ Plugging and Abandonment ☐ Conversion to a Non-Injection Well

Provide a narrative description of the work planned to be performed, or that was performed. Use additional pages as necessary. See instructions.

A workover rig capable of performing the required abandonment operations at the required depths will be moved in and set up over the well. The well casing will be inspected to determine the depth to which the well remains open and if any obstructions are present in the casing; the presence and condition of any existing surface casing will also be documented. If necessary, the well casing will be cleaned out to the bottom of the deepest screen or perforation to enable placement of cement seals.

If surface casing is present, an attempt will be made to remove it. If removal of the surface casing is not feasible, it will be left in the hole and perforated as needed to allow an annular seal to be placed to a depth of at least 25 feet bgs. In areas of agricultural use, the surface casing will be cut at least 5 feet bgs and removed.

If the surface casing cannot be removed, it will be perforated from at least 20 feet below the bedrock-LBFU contact to at least 20 feet above the contact; from at least 20 feet below the base of the MFGU to at least 20 feet above the top of the MFGU; and from at least 25 feet bgs to 5 feet bgs.

A tremie pipe will be used to place Type V cement in the open well from the bottom of the well casing to the top of the well casing. Cement retainers, as described above, will be used to force cement grout into the annulus and behind perforated screen intervals, as necessary.

If the well casing has been obstructed, as much cement as possible will be placed from 100 feet below the LBFU-bedrock contact to the top of the casing.

The volume of Type V cement will be recorded and will not be less than the estimated volume of material required to fill each interval. All cement grout will consist of Type V cement, or equivalent approved in accordance with the UIC Permit.

Certification

I certify under the penalty of law that I have personally examined and am familiar with the information submitted in this document and all attachments and that, based on my inquiry of those individuals immediately responsible for obtaining the information, I believe that the information is true, accurate, and complete. I am aware that there are significant penalties for submitting false information, including the possibliity of fine and imprisonment. (Ref. 40 CFR § 144.32)

Name and Official Title *(Please type or print)*	Signature	Date Signed
Dan Johnson, VP - General Manager		10/3/2019

INSTRUCTIONS FOR FORM 7520-19

This form replaces forms 7520-12 and 7520-14. Use this form only when work is planned or has occurred that affects the well's construction or operation as an injection well, including work on the casing, tubing or packer (or for shallow Class V wells, the subsurface fluid emplacement network). Use one form per injection well. While reports or other information developed by contractors or service companies may be attached, this form must be signed by a responsible entity as described at 40 CFR 144.32. Note: operators closing Class V wells should use Form 7520-17.

NAME, ADDRESS, PHONE AND/OR EMAIL OF PERMITTEE: Enter the name and street address, city/town, state, and ZIP code of the permittee. Also provide an email address (if available) and/or a phone number.

PERMIT OR EPA ID NUMBER: Enter the well identification number or permit number assigned to the well by the EPA or the permitting authority.

API NUMBER: Enter the number assigned by the local jurisdiction (usually a State Oil and Gas Agency) using the American Petroleum Institute standard numbering system.

FULL WELL NAME: Enter the full name of the well or project.

Enter the **STATE** and **COUNTY** where the well is located. For States that do not have counties, use the name of that State's equivalent jurisdiction at a more local level.

WELL LOCATION: Fill in the complete township, range, and section to the nearest quarter-quarter section. A township is north or south of the baseline, and a range is east or west of the principal meridian (e.g., T12N, R34W). Also include the distance, in feet, from the nearest north or south line and nearest east or west line of the quarter-section. Also, enter the **latitude** and **longitude** of the well in decimal degrees, to five or six places if possible; be sure to include a negative sign for the longitude of a well in the Western Hemisphere and a negative sign for the latitude of a well in the Southern Hemisphere.

Enter the **WELL CLASS,** i.e., the class of injection well as defined in 40 CFR 144.6.

TIMING OF THE ACTION: Check ***Notice prior to work*** if the activity has not yet occurred (i.e., is planned). Check ***Report after work*** if the activity described has already occurred. As appropriate, include the date the activity is expected to start or the date the activity was completed. (Note this may not be available, e.g., for a plugging plan submitted with a permit application.)

TYPE OF ACTION: Check the appropriate box to describe the kind of activity being reported. Check ***Well Rework*** for work that was/will be performed on the well after it has already been in operation as an injection well. Check ***Plugging and Abandonment*** to report on plans for or descriptions of final closure/plugging after use as an injection well. Check ***Conversion to a Non-Injection Well*** if the well is to be converted to something other than an injection well.

Provide a **NARRATIVE DESCRIPTION** of the work planned to be performed, or that was performed. The narrative should include a description of the main procedures planned or that occurred during the work activity. A service company report, daily report, or similar document may be attached if it includes all the requested information and is clear and legible.

For well reworks, include the following information: The reason for the well rework; depths of activity; type of activity; changes to injection well configuration, well casing, or cement behind casing; any plug added to the well and its depth; any newly drilled interval and its depth; method(s) to demonstrate that the well has mechanical integrity (as applicable); and any deviations from the approved rework plan (as applicable).

For a well plugging plan, include the following information: Reason for the well plugging; number of plugs placed, and their depths; materials used as plugs (e.g., cast iron bridge plug, cement, cement retainer); method to set plugs; and wait-on-cement times, if any. Also provide one or more cost estimates from an independent firm in the business of plugging and abandoning wells to plug the well as described in the plan.

For well plugging affidavit, include the following information: Reason for the well plugging; number of plugs placed, and their depths; materials used as plugs (e.g., cast iron bridge plug, cement, cement retainer); method to set plugs; wait-on-cement times, if any; and any deviations from the approved plugging plan (if applicable).

For conversion to a non-injection well, include the following information: Depths of activity; type of activity; changes to injection well configuration, well casing, or cement behind casing; any plug added to the well and its depth; any newly drilled interval and its depth; depths of new perforations; and method(s) to demonstrate that the well has mechanical integrity (as applicable).

For all of the above activities, include a well sketch depicting the work, results of well tests/logging performed, service company tickets, and any other available information demonstrating how the work was/is to be performed. Also, specify whether depths are below ground surface, relative to Kelly bushing, etc.

CERTIFICATION: This form must be signed and dated by either: a responsible corporate officer for a corporation, by a general partner for a partnership, by the proprietor of a sole proprietorship, or by a principal executive or ranking elected official for a public agency.

PAPERWORK REDUCTION ACT NOTICE: The public reporting and recordkeeping burden for this collection of information is estimated to average between 6.0 and 7.9 hours per response, depending on the injection well class. Burden means the total time, effort, or financial resource expended by persons to generate, maintain, retain, or disclose or provide information to or for a Federal Agency. This includes the time needed to review instructions; develop, acquire, install, and utilize technology and systems for the purposes of collecting, validating, and verifying information, processing and maintaining information, and disclosing and providing information; adjust the existing ways to comply with any previously applicable instructions and requirements; train personnel to be able to respond to the collection of information; search data sources; complete and review the collection of information; and, transmit or otherwise disclose the information. An agency may not conduct or sponsor, and a person is not required to respond to, a collection of information unless it displays a currently valid OMB control number. Send comments on the Agency's need for this information, the accuracy of the provided burden estimates, and any suggested methods for minimizing respondent burden, including the use of automated collection techniques to Director, Collection Strategies Division, U.S. Environmental Protection Agency (2822), 1200 Pennsylvania Ave., NW., Washington, D.C. 20460. Include the OMB control number in any correspondence. Do not send the completed forms to this address.

Saved by: MNICHOLLS Printed: 7/25/2019 7:20 PM Sheet: HA-FIG-A-L(2)
\\HALEYALDRICH.COM\SHARE\PHX_COMMON\PROJECTS\FLORENCE COPPER\132473 FLORENCE GROUNDWATER PERMITTING\CAD\132473_000-OBSERVATION_WELL_CONSTRUCTION DIAGRAM.DWG

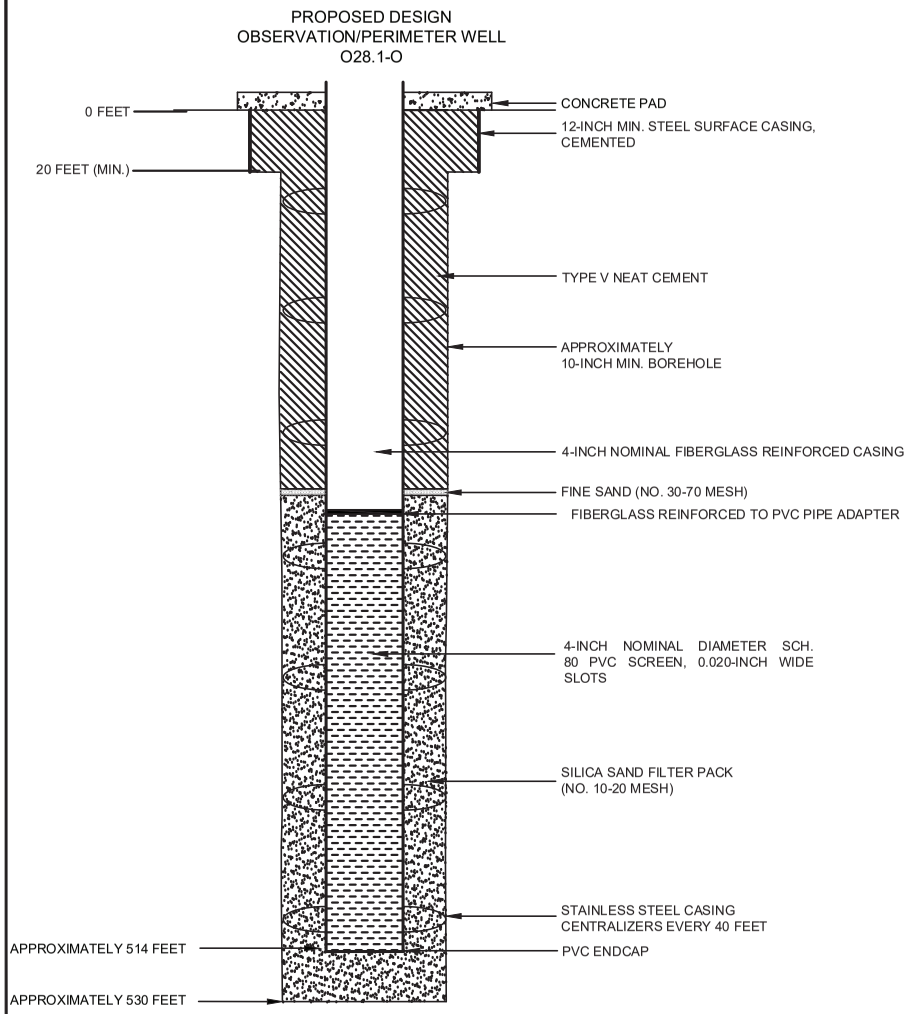

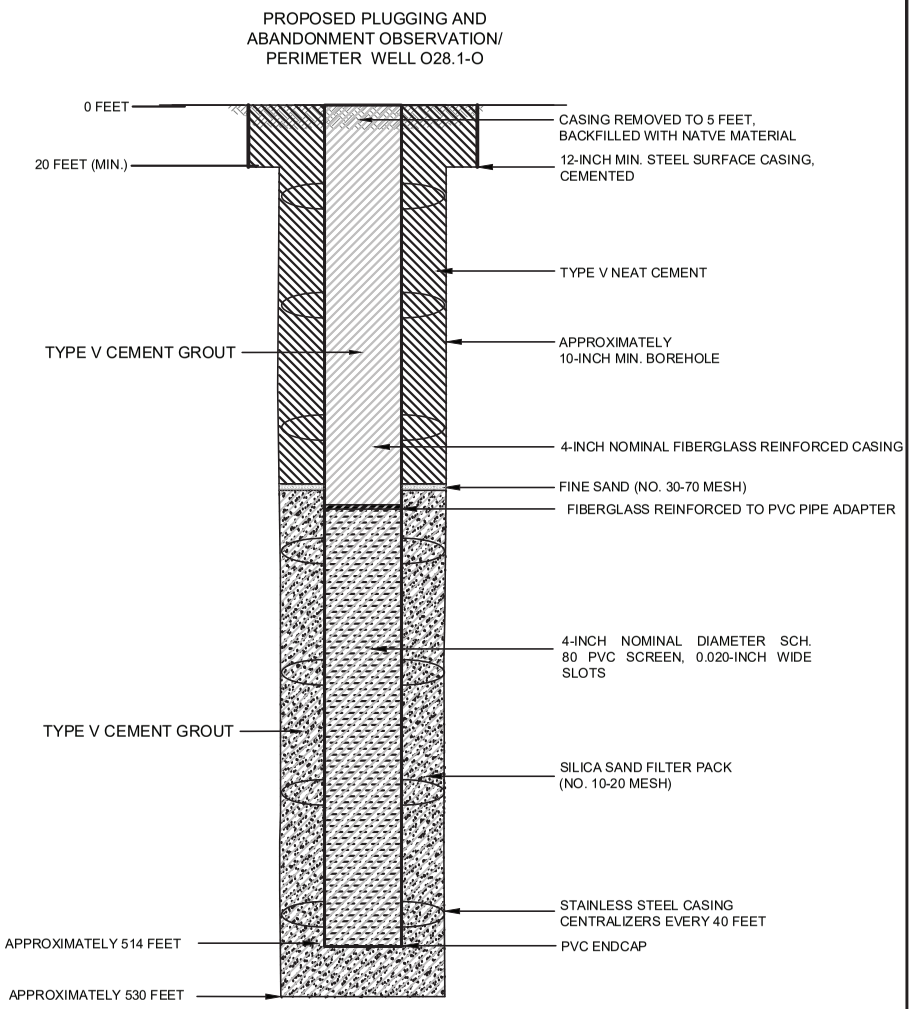

NOTES

1. WELL DESIGN DETAILS ARE BASED ON CORE HOLE AND WELL LOG RECORDS.

HALEY ALDRICH

FLORENCE COPPER, INC.
FLORENCE, ARIZONA

ABANDONMENT SCHEMATIC
OBSERVATION/PERIMETER
WELL O28.1-O

SEPTEMBER 2019
SCALE: AS SHOWN

FIGURE 1

OMB No. 2040-0042 Approval Expires 4/30/2022

United States Environmental Protection Agency

WELL REWORK RECORD, PLUGGING AND ABANDONMENT PLAN, OR PLUGGING AND ABANDONMENT AFFIDAVIT

Name and Address, Phone Number and/or Email of Permittee

Florence Copper Project
1575 W Hunt Hwy,
Florence, AZ 85132

Permit or EPA ID Number	API Number	Full Well Name
R9UIC-AZ3-FY11-1		O28.2-S

State	County
Arizona	Pinal

Locate well in two directions from nearest lines of quarter section and drilling unit

Latitude 33.04881686

Surface Location

SE **1/4 of** SE **1/4 of Section** 28 **Township** 4S **Range** 9E

Longitude -111.4234635

_____ **ft. from (N/S)** _____ **Line of quarter section**

_____ **ft. from (E/W)** _____ **Line of quarter section.**

Well Class	Timing of Action (pick one)	Type of Action (pick one)
☐ Class I ☐ Class II ☑ Class III ☐ Class V	☑ Notice Prior to Work Date Expected to Commence March 2021 ☐ Report After Work Date Work Ended	☐ Well Rework ☑ Plugging and Abandonment ☐ Conversion to a Non-Injection Well

Provide a narrative description of the work planned to be performed, or that was performed. Use additional pages as necessary. See instructions.

A workover rig capable of performing the required abandonment operations at the required depths will be moved in and set up over the well. The well casing will be inspected to determine the depth to which the well remains open and if any obstructions are present in the casing; the presence and condition of any existing surface casing will also be documented. If necessary, the well casing will be cleaned out to the bottom of the deepest screen or perforation to enable placement of cement seals.

If surface casing is present, an attempt will be made to remove it. If removal of the surface casing is not feasible, it will be left in the hole and perforated as needed to allow an annular seal to be placed to a depth of at least 25 feet bgs. In areas of agricultural use, the surface casing will be cut at least 5 feet bgs and removed.

If the surface casing cannot be removed, it will be perforated from at least 20 feet below the bedrock-LBFU contact to at least 20 feet above the contact; from at least 20 feet below the base of the MFGU to at least 20 feet above the top of the MFGU; and from at least 25 feet bgs to 5 feet bgs.

A tremie pipe will be used to place Type V cement in the open well from the bottom of the well casing to the top of the well casing. Cement retainers, as described above, will be used to force cement grout into the annulus and behind perforated screen intervals, as necessary.

If the well casing has been obstructed, as much cement as possible will be placed from 100 feet below the LBFU-bedrock contact to the top of the casing.

The volume of Type V cement will be recorded and will not be less than the estimated volume of material required to fill each interval. All cement grout will consist of Type V cement, or equivalent approved in accordance with the UIC Permit.

Certification

I certify under the penalty of law that I have personally examined and am familiar with the information submitted in this document and all attachments and that, based on my inquiry of those individuals immediately responsible for obtaining the information, I believe that the information is true, accurate, and complete. I am aware that there are significant penalties for submitting false information, including the possibliity of fine and imprisonment. (Ref. 40 CFR § 144.32)

Name and Official Title *(Please type or print)*	Signature	Date Signed
Dan Johnson, VP - General Manager		10/3/2019

INSTRUCTIONS FOR FORM 7520-19

This form replaces forms 7520-12 and 7520-14. Use this form only when work is planned or has occurred that affects the well's construction or operation as an injection well, including work on the casing, tubing or packer (or for shallow Class V wells, the subsurface fluid emplacement network). Use one form per injection well. While reports or other information developed by contractors or service companies may be attached, this form must be signed by a responsible entity as described at 40 CFR 144.32. Note: operators closing Class V wells should use Form 7520-17.

NAME, ADDRESS, PHONE AND/OR EMAIL OF PERMITTEE: Enter the name and street address, city/town, state, and ZIP code of the permittee. Also provide an email address (if available) and/or a phone number.

PERMIT OR EPA ID NUMBER: Enter the well identification number or permit number assigned to the well by the EPA or the permitting authority.

API NUMBER: Enter the number assigned by the local jurisdiction (usually a State Oil and Gas Agency) using the American Petroleum Institute standard numbering system.

FULL WELL NAME: Enter the full name of the well or project.

Enter the **STATE** and **COUNTY** where the well is located. For States that do not have counties, use the name of that State's equivalent jurisdiction at a more local level.

WELL LOCATION: Fill in the complete township, range, and section to the nearest quarter-quarter section. A township is north or south of the baseline, and a range is east or west of the principal meridian (e.g., T12N, R34W). Also include the distance, in feet, from the nearest north or south line and nearest east or west line of the quarter-section. Also, enter the **latitude** and **longitude** of the well in decimal degrees, to five or six places if possible; be sure to include a negative sign for the longitude of a well in the Western Hemisphere and a negative sign for the latitude of a well in the Southern Hemisphere.

Enter the **WELL CLASS,** i.e., the class of injection well as defined in 40 CFR 144.6.

TIMING OF THE ACTION: Check ***Notice prior to work*** if the activity has not yet occurred (i.e., is planned). Check ***Report after work*** if the activity described has already occurred. As appropriate, include the date the activity is expected to start or the date the activity was completed. (Note this may not be available, e.g., for a plugging plan submitted with a permit application.)

TYPE OF ACTION: Check the appropriate box to describe the kind of activity being reported. Check ***Well Rework*** for work that was/will be performed on the well after it has already been in operation as an injection well. Check ***Plugging and Abandonment*** to report on plans for or descriptions of final closure/plugging after use as an injection well. Check ***Conversion to a Non-Injection Well*** if the well is to be converted to something other than an injection well.

Provide a **NARRATIVE DESCRIPTION** of the work planned to be performed, or that was performed. The narrative should include a description of the main procedures planned or that occurred during the work activity. A service company report, daily report, or similar document may be attached if it includes all the requested information and is clear and legible.

For well reworks, include the following information: The reason for the well rework; depths of activity; type of activity; changes to injection well configuration, well casing, or cement behind casing; any plug added to the well and its depth; any newly drilled interval and its depth; method(s) to demonstrate that the well has mechanical integrity (as applicable); and any deviations from the approved rework plan (as applicable).

For a well plugging plan, include the following information: Reason for the well plugging; number of plugs placed, and their depths; materials used as plugs (e.g., cast iron bridge plug, cement, cement retainer); method to set plugs; and wait-on-cement times, if any. Also provide one or more cost estimates from an independent firm in the business of plugging and abandoning wells to plug the well as described in the plan.

For well plugging affidavit, include the following information: Reason for the well plugging; number of plugs placed, and their depths; materials used as plugs (e.g., cast iron bridge plug, cement, cement retainer); method to set plugs; wait-on-cement times, if any; and any deviations from the approved plugging plan (if applicable).

For conversion to a non-injection well, include the following information: Depths of activity; type of activity; changes to injection well configuration, well casing, or cement behind casing; any plug added to the well and its depth; any newly drilled interval and its depth; depths of new perforations; and method(s) to demonstrate that the well has mechanical integrity (as applicable).

For all of the above activities, include a well sketch depicting the work, results of well tests/logging performed, service company tickets, and any other available information demonstrating how the work was/is to be performed. Also, specify whether depths are below ground surface, relative to Kelly bushing, etc.

CERTIFICATION: This form must be signed and dated by either: a responsible corporate officer for a corporation, by a general partner for a partnership, by the proprietor of a sole proprietorship, or by a principal executive or ranking elected official for a public agency.

PAPERWORK REDUCTION ACT NOTICE: The public reporting and recordkeeping burden for this collection of information is estimated to average between 6.0 and 7.9 hours per response, depending on the injection well class. Burden means the total time, effort, or financial resource expended by persons to generate, maintain, retain, or disclose or provide information to or for a Federal Agency. This includes the time needed to review instructions; develop, acquire, install, and utilize technology and systems for the purposes of collecting, validating, and verifying information, processing and maintaining information, and disclosing and providing information; adjust the existing ways to comply with any previously applicable instructions and requirements; train personnel to be able to respond to the collection of information; search data sources; complete and review the collection of information; and, transmit or otherwise disclose the information. An agency may not conduct or sponsor, and a person is not required to respond to, a collection of information unless it displays a currently valid OMB control number. Send comments on the Agency's need for this information, the accuracy of the provided burden estimates, and any suggested methods for minimizing respondent burden, including the use of automated collection techniques to Director, Collection Strategies Division, U.S. Environmental Protection Agency (2822), 1200 Pennsylvania Ave., NW., Washington, D.C. 20460. Include the OMB control number in any correspondence. Do not send the completed forms to this address.

PROPOSED DESIGN
OBSERVATION/PERIMETER WELL
O28.2-S

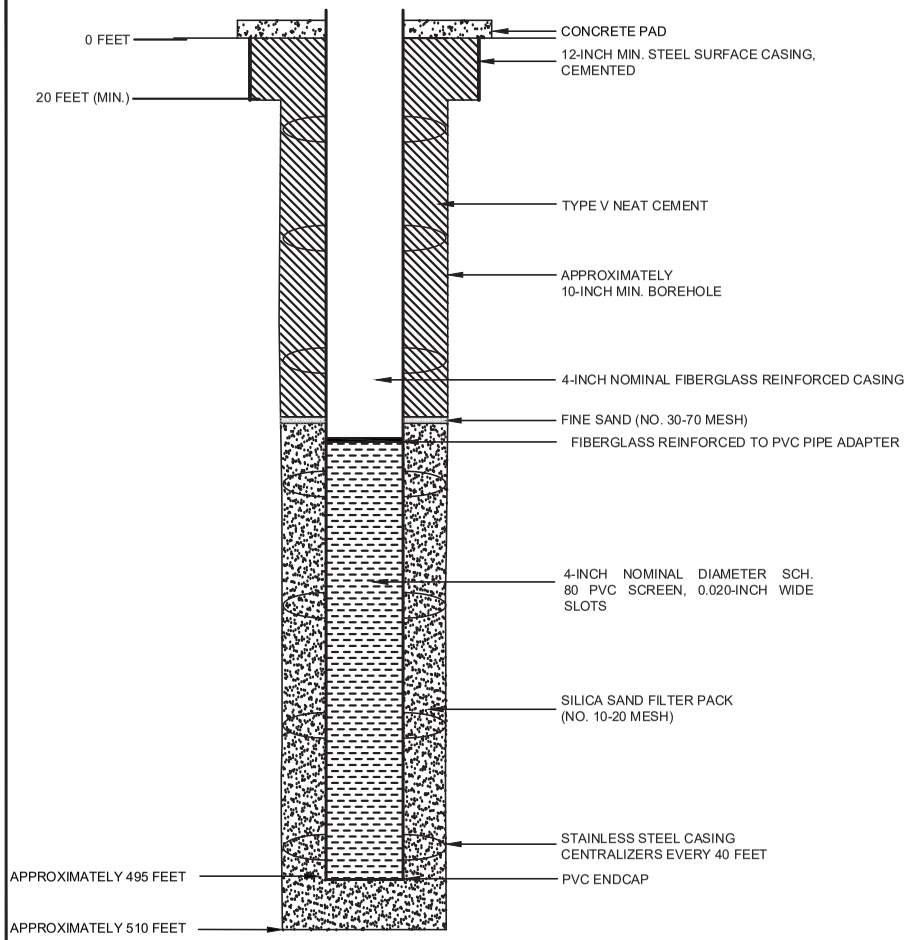

PROPOSED PLUGGING AND
ABANDONMENT OBSERVATION/
PERIMETER WELL O28.2-S

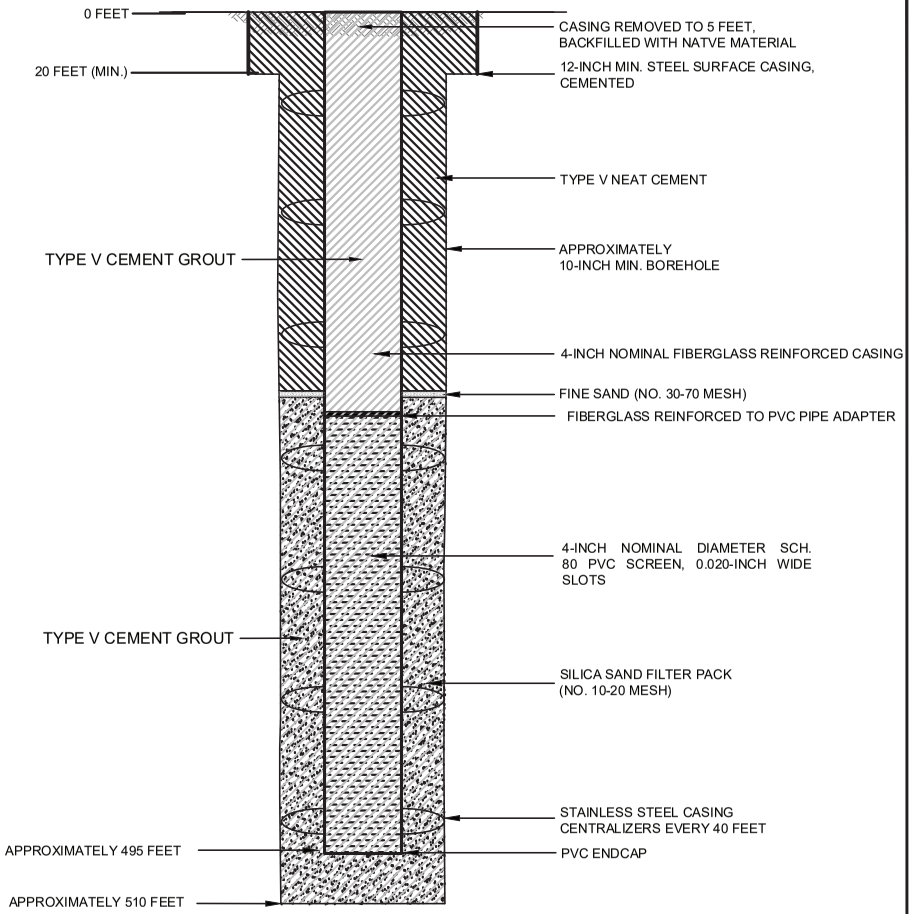

NOTES

1. WELL DESIGN DETAILS ARE BASED ON CORE HOLE AND WELL LOG RECORDS.

HALEY ALDRICH

FLORENCE COPPER, INC.
FLORENCE, ARIZONA

ABANDONMENT SCHEMATIC
OBSERVATION/PERIMETER
WELL O28.2-S

SEPTEMBER 2019
SCALE: AS SHOWN

FIGURE 1

OMB No. 2040-0042 Approval Expires 4/30/2022

United States Environmental Protection Agency

WELL REWORK RECORD, PLUGGING AND ABANDONMENT PLAN, OR PLUGGING AND ABANDONMENT AFFIDAVIT

Name and Address, Phone Number and/or Email of Permittee

Florence Copper Project
1575 W Hunt Hwy,
Florence, AZ 85132

Permit or EPA ID Number	API Number	Full Well Name
R9UIC-AZ3-FY11-1		O28-GL

State	County
Arizona	Pinal

Locate well in two directions from nearest lines of quarter section and drilling unit

Latitude 33.04874082

Surface Location

SE **1/4 of** SE **1/4 of Section** 28 **Township** 4S **Range** 9E

Longitude -111.423977

_____ **ft. from (N/S)** _____ **Line of quarter section**

_____ **ft. from (E/W)** _____ **Line of quarter section.**

Well Class	Timing of Action (pick one)	Type of Action (pick one)
☐ Class I ☐ Class II ☑ Class III ☐ Class V	☑ Notice Prior to Work Date Expected to Commence March 2021 ☐ Report After Work Date Work Ended	☐ Well Rework ☑ Plugging and Abandonment ☐ Conversion to a Non-Injection Well

Provide a narrative description of the work planned to be performed, or that was performed. Use additional pages as necessary. See instructions.

A workover rig capable of performing the required abandonment operations at the required depths will be moved in and set up over the well. The well casing will be inspected to determine the depth to which the well remains open and if any obstructions are present in the casing; the presence and condition of any existing surface casing will also be documented. If necessary, the well casing will be cleaned out to the bottom of the deepest screen or perforation to enable placement of cement seals.

If surface casing is present, an attempt will be made to remove it. If removal of the surface casing is not feasible, it will be left in the hole and perforated as needed to allow an annular seal to be placed to a depth of at least 25 feet bgs. In areas of agricultural use, the surface casing will be cut at least 5 feet bgs and removed.

If the surface casing cannot be removed, it will be perforated from at least 20 feet below the bedrock-LBFU contact to at least 20 feet above the contact; from at least 20 feet below the base of the MFGU to at least 20 feet above the top of the MFGU; and from at least 25 feet bgs to 5 feet bgs.

A tremie pipe will be used to place Type V cement in the open well from the bottom of the well casing to the top of the well casing. Cement retainers, as described above, will be used to force cement grout into the annulus and behind perforated screen intervals, as necessary.

If the well casing has been obstructed, as much cement as possible will be placed from 100 feet below the LBFU-bedrock contact to the top of the casing.

The volume of Type V cement will be recorded and will not be less than the estimated volume of material required to fill each interval. All cement grout will consist of Type V cement, or equivalent approved in accordance with the UIC Permit.

Certification

I certify under the penalty of law that I have personally examined and am familiar with the information submitted in this document and all attachments and that, based on my inquiry of those individuals immediately responsible for obtaining the information, I believe that the information is true, accurate, and complete. I am aware that there are significant penalties for submitting false information, including the possibliity of fine and imprisonment. (Ref. 40 CFR § 144.32)

Name and Official Title *(Please type or print)*	Signature	Date Signed
Dan Johnson, VP - General Manager		10/3/2019

INSTRUCTIONS FOR FORM 7520-19

This form replaces forms 7520-12 and 7520-14. Use this form only when work is planned or has occurred that affects the well's construction or operation as an injection well, including work on the casing, tubing or packer (or for shallow Class V wells, the subsurface fluid emplacement network). Use one form per injection well. While reports or other information developed by contractors or service companies may be attached, this form must be signed by a responsible entity as described at 40 CFR 144.32. Note: operators closing Class V wells should use Form 7520-17.

NAME, ADDRESS, PHONE AND/OR EMAIL OF PERMITTEE: Enter the name and street address, city/town, state, and ZIP code of the permittee. Also provide an email address (if available) and/or a phone number.

PERMIT OR EPA ID NUMBER: Enter the well identification number or permit number assigned to the well by the EPA or the permitting authority.

API NUMBER: Enter the number assigned by the local jurisdiction (usually a State Oil and Gas Agency) using the American Petroleum Institute standard numbering system.

FULL WELL NAME: Enter the full name of the well or project.

Enter the **STATE** and **COUNTY** where the well is located. For States that do not have counties, use the name of that State's equivalent jurisdiction at a more local level.

WELL LOCATION: Fill in the complete township, range, and section to the nearest quarter-quarter section. A township is north or south of the baseline, and a range is east or west of the principal meridian (e.g., T12N, R34W). Also include the distance, in feet, from the nearest north or south line and nearest east or west line of the quarter-section. Also, enter the **latitude** and **longitude** of the well in decimal degrees, to five or six places if possible; be sure to include a negative sign for the longitude of a well in the Western Hemisphere and a negative sign for the latitude of a well in the Southern Hemisphere.

Enter the **WELL CLASS,** i.e., the class of injection well as defined in 40 CFR 144.6.

TIMING OF THE ACTION: Check ***Notice prior to work*** if the activity has not yet occurred (i.e., is planned). Check ***Report after work*** if the activity described has already occurred. As appropriate, include the date the activity is expected to start or the date the activity was completed. (Note this may not be available, e.g., for a plugging plan submitted with a permit application.)

TYPE OF ACTION: Check the appropriate box to describe the kind of activity being reported. Check ***Well Rework*** for work that was/will be performed on the well after it has already been in operation as an injection well. Check ***Plugging and Abandonment*** to report on plans for or descriptions of final closure/plugging after use as an injection well. Check ***Conversion to a Non-Injection Well*** if the well is to be converted to something other than an injection well.

Provide a **NARRATIVE DESCRIPTION** of the work planned to be performed, or that was performed. The narrative should include a description of the main procedures planned or that occurred during the work activity. A service company report, daily report, or similar document may be attached if it includes all the requested information and is clear and legible.

For well reworks, include the following information: The reason for the well rework; depths of activity; type of activity; changes to injection well configuration, well casing, or cement behind casing; any plug added to the well and its depth; any newly drilled interval and its depth; method(s) to demonstrate that the well has mechanical integrity (as applicable); and any deviations from the approved rework plan (as applicable).

For a well plugging plan, include the following information: Reason for the well plugging; number of plugs placed, and their depths; materials used as plugs (e.g., cast iron bridge plug, cement, cement retainer); method to set plugs; and wait-on-cement times, if any. Also provide one or more cost estimates from an independent firm in the business of plugging and abandoning wells to plug the well as described in the plan.

For well plugging affidavit, include the following information: Reason for the well plugging; number of plugs placed, and their depths; materials used as plugs (e.g., cast iron bridge plug, cement, cement retainer); method to set plugs; wait-on-cement times, if any; and any deviations from the approved plugging plan (if applicable).

For conversion to a non-injection well, include the following information: Depths of activity; type of activity; changes to injection well configuration, well casing, or cement behind casing; any plug added to the well and its depth; any newly drilled interval and its depth; depths of new perforations; and method(s) to demonstrate that the well has mechanical integrity (as applicable).

For all of the above activities, include a well sketch depicting the work, results of well tests/logging performed, service company tickets, and any other available information demonstrating how the work was/is to be performed. Also, specify whether depths are below ground surface, relative to Kelly bushing, etc.

CERTIFICATION: This form must be signed and dated by either: a responsible corporate officer for a corporation, by a general partner for a partnership, by the proprietor of a sole proprietorship, or by a principal executive or ranking elected official for a public agency.

PAPERWORK REDUCTION ACT NOTICE: The public reporting and recordkeeping burden for this collection of information is estimated to average between 6.0 and 7.9 hours per response, depending on the injection well class. Burden means the total time, effort, or financial resource expended by persons to generate, maintain, retain, or disclose or provide information to or for a Federal Agency. This includes the time needed to review instructions; develop, acquire, install, and utilize technology and systems for the purposes of collecting, validating, and verifying information, processing and maintaining information, and disclosing and providing information; adjust the existing ways to comply with any previously applicable instructions and requirements; train personnel to be able to respond to the collection of information; search data sources; complete and review the collection of information; and, transmit or otherwise disclose the information. An agency may not conduct or sponsor, and a person is not required to respond to, a collection of information unless it displays a currently valid OMB control number. Send comments on the Agency's need for this information, the accuracy of the provided burden estimates, and any suggested methods for minimizing respondent burden, including the use of automated collection techniques to Director, Collection Strategies Division, U.S. Environmental Protection Agency (2822), 1200 Pennsylvania Ave., NW., Washington, D.C. 20460. Include the OMB control number in any correspondence. Do not send the completed forms to this address.

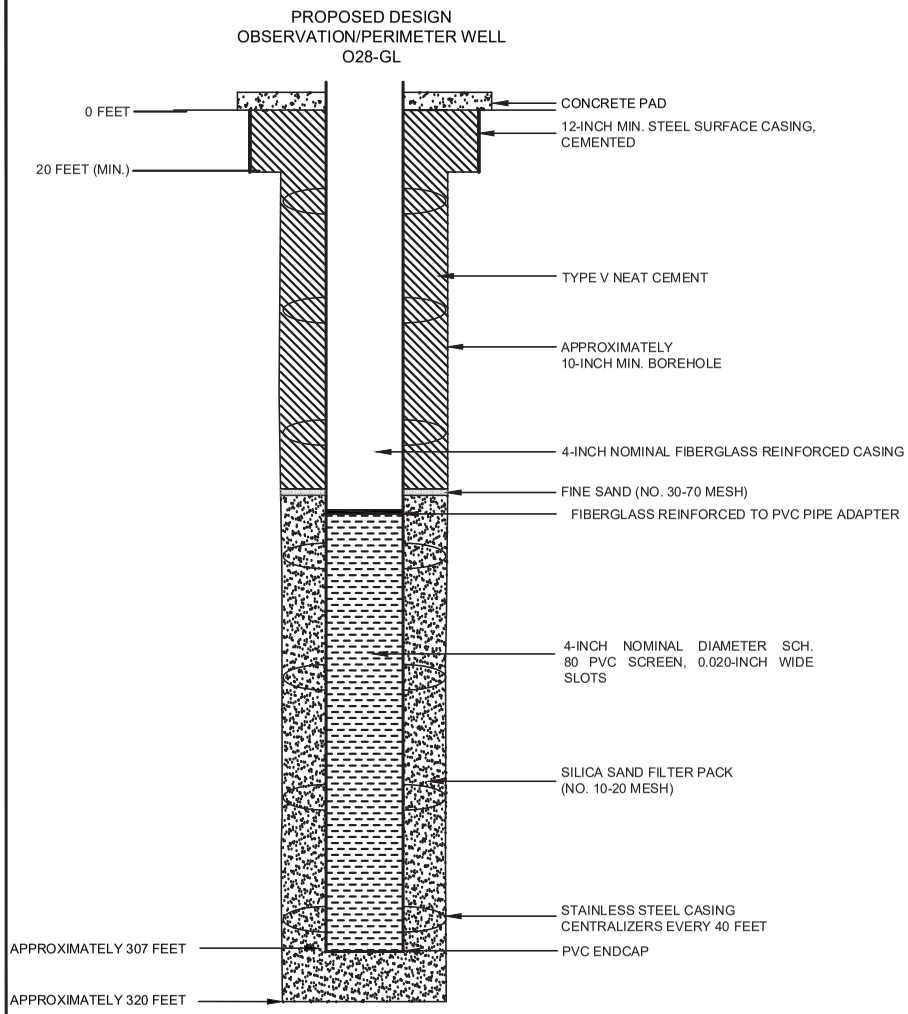

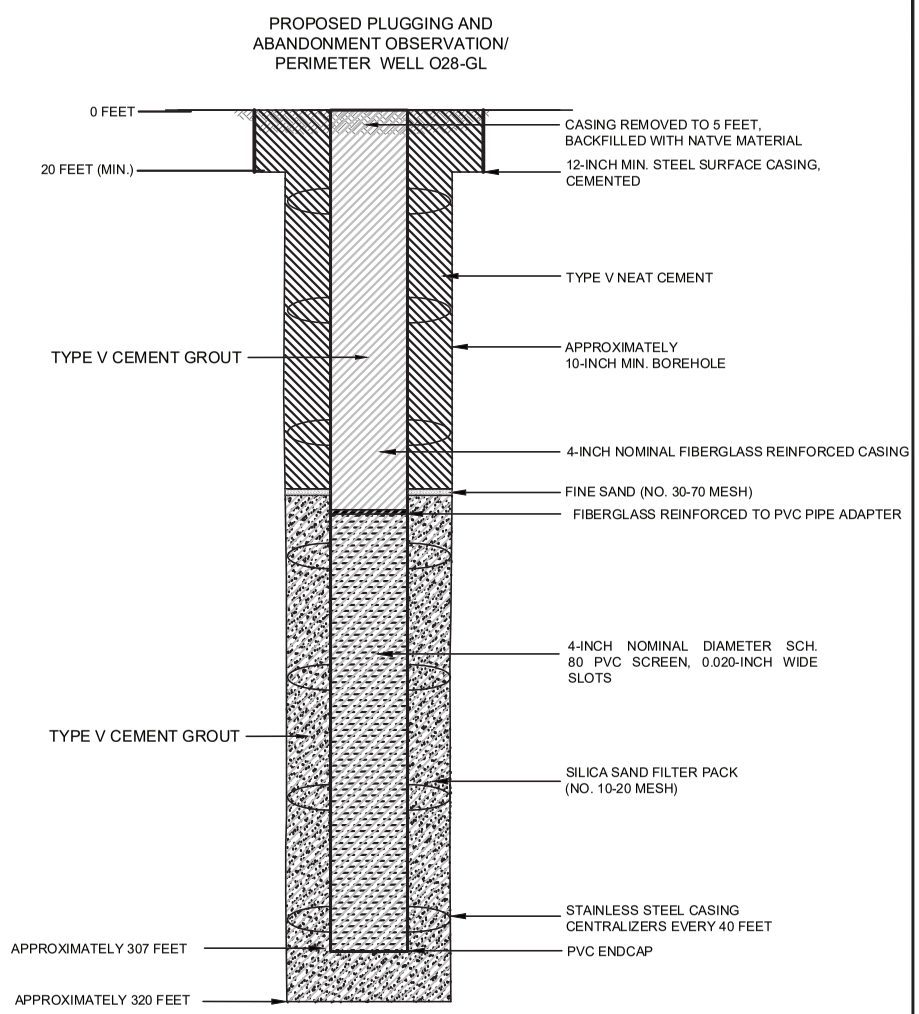

NOTES

1. WELL DESIGN DETAILS ARE BASED ON CORE HOLE AND WELL LOG RECORDS.

HALEY ALDRICH

FLORENCE COPPER, INC.
FLORENCE, ARIZONA

ABANDONMENT SCHEMATIC
OBSERVATION/PERIMETER
WELL O28-GL

SEPTEMBER 2019
SCALE: AS SHOWN

FIGURE 1

OMB No. 2040-0042 Approval Expires 4/30/2022

United States Environmental Protection Agency

WELL REWORK RECORD, PLUGGING AND ABANDONMENT PLAN, OR PLUGGING AND ABANDONMENT AFFIDAVIT

Name and Address, Phone Number and/or Email of Permittee

Florence Copper Project
1575 W Hunt Hwy,
Florence, AZ 85132

Permit or EPA ID Number	API Number	Full Well Name
R9UIC-AZ3-FY11-1		O39-O

State	County
Arizona	Pinal

Locate well in two directions from nearest lines of quarter section and drilling unit

Latitude 33.04499319

Surface Location

NE **1/4 of** NW **1/4 of Section** 33 **Township** 4S **Range** 9E

Longitude -111.4300958

_____ **ft. from (N/S)** _____ **Line of quarter section**

_____ **ft. from (E/W)** _____ **Line of quarter section.**

Well Class	Timing of Action (pick one)	Type of Action (pick one)
☐ Class I ☐ Class II ☑ Class III ☐ Class V	☑ Notice Prior to Work Date Expected to Commence March 2021 ☐ Report After Work Date Work Ended	☐ Well Rework ☑ Plugging and Abandonment ☐ Conversion to a Non-Injection Well

Provide a narrative description of the work planned to be performed, or that was performed. Use additional pages as necessary. See instructions.

A workover rig capable of performing the required abandonment operations at the required depths will be moved in and set up over the well. The well casing will be inspected to determine the depth to which the well remains open and if any obstructions are present in the casing; the presence and condition of any existing surface casing will also be documented. If necessary, the well casing will be cleaned out to the bottom of the deepest screen or perforation to enable placement of cement seals.

If surface casing is present, an attempt will be made to remove it. If removal of the surface casing is not feasible, it will be left in the hole and perforated as needed to allow an annular seal to be placed to a depth of at least 25 feet bgs. In areas of agricultural use, the surface casing will be cut at least 5 feet bgs and removed.

If the surface casing cannot be removed, it will be perforated from at least 20 feet below the bedrock-LBFU contact to at least 20 feet above the contact; from at least 20 feet below the base of the MFGU to at least 20 feet above the top of the MFGU; and from at least 25 feet bgs to 5 feet bgs.

A tremie pipe will be used to place Type V cement in the open well from the bottom of the well casing to the top of the well casing. Cement retainers, as described above, will be used to force cement grout into the annulus and behind perforated screen intervals, as necessary.

If the well casing has been obstructed, as much cement as possible will be placed from 100 feet below the LBFU-bedrock contact to the top of the casing.

The volume of Type V cement will be recorded and will not be less than the estimated volume of material required to fill each interval. All cement grout will consist of Type V cement, or equivalent approved in accordance with the UIC Permit.

Certification

I certify under the penalty of law that I have personally examined and am familiar with the information submitted in this document and all attachments and that, based on my inquiry of those individuals immediately responsible for obtaining the information, I believe that the information is true, accurate, and complete. I am aware that there are significant penalties for submitting false information, including the possibliity of fine and imprisonment. (Ref. 40 CFR § 144.32)

Name and Official Title *(Please type or print)*	Signature	Date Signed
Dan Johnson, VP - General Manager		10/3/2019

INSTRUCTIONS FOR FORM 7520-19

This form replaces forms 7520-12 and 7520-14. Use this form only when work is planned or has occurred that affects the well's construction or operation as an injection well, including work on the casing, tubing or packer (or for shallow Class V wells, the subsurface fluid emplacement network). Use one form per injection well. While reports or other information developed by contractors or service companies may be attached, this form must be signed by a responsible entity as described at 40 CFR 144.32. Note: operators closing Class V wells should use Form 7520-17.

NAME, ADDRESS, PHONE AND/OR EMAIL OF PERMITTEE: Enter the name and street address, city/town, state, and ZIP code of the permittee. Also provide an email address (if available) and/or a phone number.

PERMIT OR EPA ID NUMBER: Enter the well identification number or permit number assigned to the well by the EPA or the permitting authority.

API NUMBER: Enter the number assigned by the local jurisdiction (usually a State Oil and Gas Agency) using the American Petroleum Institute standard numbering system.

FULL WELL NAME: Enter the full name of the well or project.

Enter the **STATE** and **COUNTY** where the well is located. For States that do not have counties, use the name of that State's equivalent jurisdiction at a more local level.

WELL LOCATION: Fill in the complete township, range, and section to the nearest quarter-quarter section. A township is north or south of the baseline, and a range is east or west of the principal meridian (e.g., T12N, R34W). Also include the distance, in feet, from the nearest north or south line and nearest east or west line of the quarter-section. Also, enter the **latitude** and **longitude** of the well in decimal degrees, to five or six places if possible; be sure to include a negative sign for the longitude of a well in the Western Hemisphere and a negative sign for the latitude of a well in the Southern Hemisphere.

Enter the **WELL CLASS,** i.e., the class of injection well as defined in 40 CFR 144.6.

TIMING OF THE ACTION: Check ***Notice prior to work*** if the activity has not yet occurred (i.e., is planned). Check ***Report after work*** if the activity described has already occurred. As appropriate, include the date the activity is expected to start or the date the activity was completed. (Note this may not be available, e.g., for a plugging plan submitted with a permit application.)

TYPE OF ACTION: Check the appropriate box to describe the kind of activity being reported. Check ***Well Rework*** for work that was/will be performed on the well after it has already been in operation as an injection well. Check ***Plugging and Abandonment*** to report on plans for or descriptions of final closure/plugging after use as an injection well. Check ***Conversion to a Non-Injection Well*** if the well is to be converted to something other than an injection well.

Provide a **NARRATIVE DESCRIPTION** of the work planned to be performed, or that was performed. The narrative should include a description of the main procedures planned or that occurred during the work activity. A service company report, daily report, or similar document may be attached if it includes all the requested information and is clear and legible.

For well reworks, include the following information: The reason for the well rework; depths of activity; type of activity; changes to injection well configuration, well casing, or cement behind casing; any plug added to the well and its depth; any newly drilled interval and its depth; method(s) to demonstrate that the well has mechanical integrity (as applicable); and any deviations from the approved rework plan (as applicable).

For a well plugging plan, include the following information: Reason for the well plugging; number of plugs placed, and their depths; materials used as plugs (e.g., cast iron bridge plug, cement, cement retainer); method to set plugs; and wait-on-cement times, if any. Also provide one or more cost estimates from an independent firm in the business of plugging and abandoning wells to plug the well as described in the plan.

For well plugging affidavit, include the following information: Reason for the well plugging; number of plugs placed, and their depths; materials used as plugs (e.g., cast iron bridge plug, cement, cement retainer); method to set plugs; wait-on-cement times, if any; and any deviations from the approved plugging plan (if applicable).

For conversion to a non-injection well, include the following information: Depths of activity; type of activity; changes to injection well configuration, well casing, or cement behind casing; any plug added to the well and its depth; any newly drilled interval and its depth; depths of new perforations; and method(s) to demonstrate that the well has mechanical integrity (as applicable).

For all of the above activities, include a well sketch depicting the work, results of well tests/logging performed, service company tickets, and any other available information demonstrating how the work was/is to be performed. Also, specify whether depths are below ground surface, relative to Kelly bushing, etc.

CERTIFICATION: This form must be signed and dated by either: a responsible corporate officer for a corporation, by a general partner for a partnership, by the proprietor of a sole proprietorship, or by a principal executive or ranking elected official for a public agency.

PAPERWORK REDUCTION ACT NOTICE: The public reporting and recordkeeping burden for this collection of information is estimated to average between 6.0 and 7.9 hours per response, depending on the injection well class. Burden means the total time, effort, or financial resource expended by persons to generate, maintain, retain, or disclose or provide information to or for a Federal Agency. This includes the time needed to review instructions; develop, acquire, install, and utilize technology and systems for the purposes of collecting, validating, and verifying information, processing and maintaining information, and disclosing and providing information; adjust the existing ways to comply with any previously applicable instructions and requirements; train personnel to be able to respond to the collection of information; search data sources; complete and review the collection of information; and, transmit or otherwise disclose the information. An agency may not conduct or sponsor, and a person is not required to respond to, a collection of information unless it displays a currently valid OMB control number. Send comments on the Agency's need for this information, the accuracy of the provided burden estimates, and any suggested methods for minimizing respondent burden, including the use of automated collection techniques to Director, Collection Strategies Division, U.S. Environmental Protection Agency (2822), 1200 Pennsylvania Ave., NW., Washington, D.C. 20460. Include the OMB control number in any correspondence. Do not send the completed forms to this address.

Saved by: MNICHOLLS Printed: 7/25/2019 7:20 PM Sheet: HA-FIG-A-L(2)
\\HALEYALDRICH.COM\SHARE\PHX_COMMON\PROJECTS\FLORENCE COPPER\132473 FLORENCE GROUNDWATER PERMITTING\CAD\132473_000-OBSERVATION_WELL_CONSTRUCTION DIAGRAM.DWG

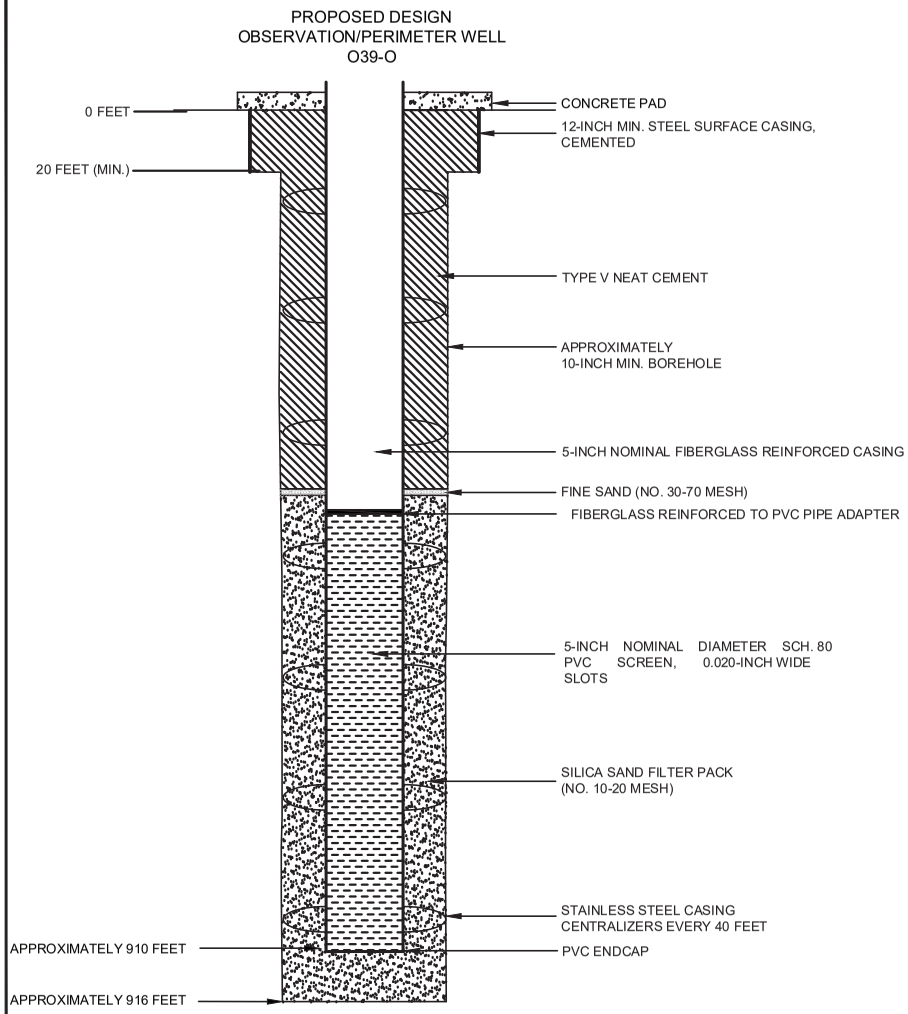

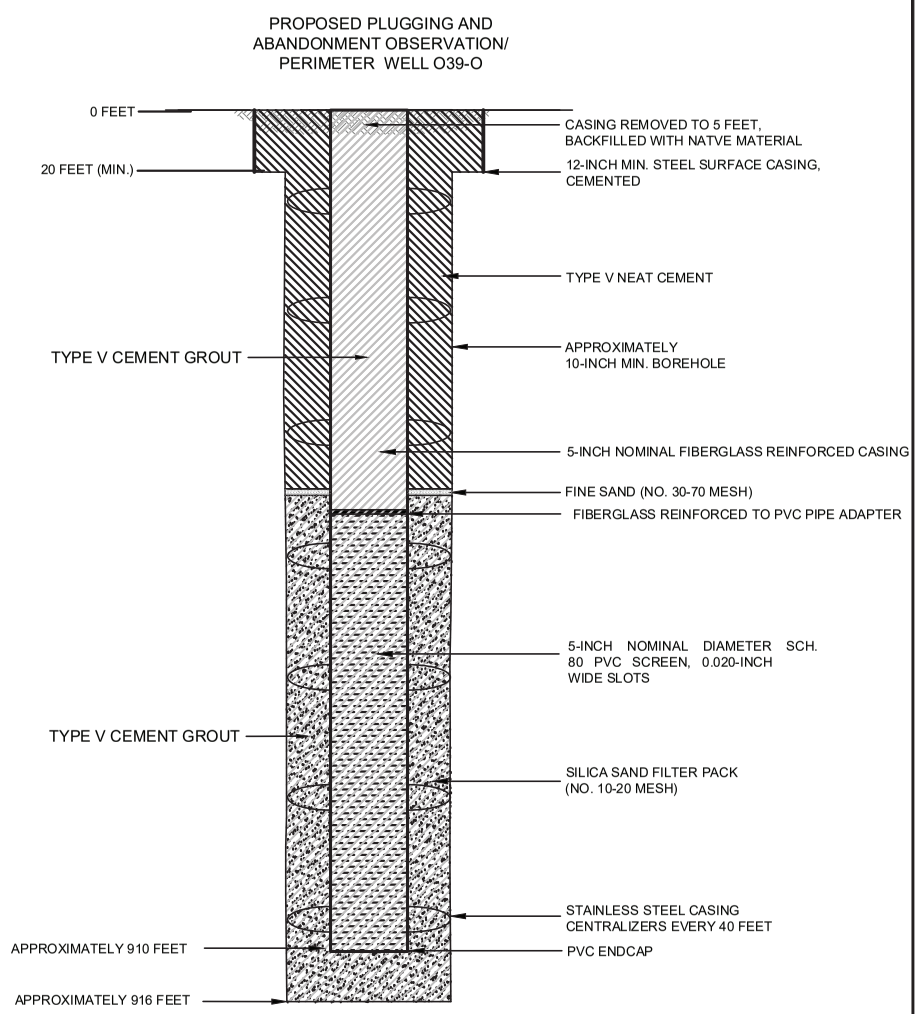

NOTES

1. WELL DESIGN DETAILS ARE BASED ON CORE HOLE AND WELL LOG RECORDS.

HALEY ALDRICH

FLORENCE COPPER, INC.
FLORENCE, ARIZONA

ABANDONMENT SCHEMATIC
OBSERVATION/PERIMETER
WELL O39-O

SEPTEMBER 2019
SCALE: AS SHOWN

FIGURE 1

OMB No. 2040-0042 Approval Expires 4/30/2022

United States Environmental Protection Agency

WELL REWORK RECORD, PLUGGING AND ABANDONMENT PLAN, OR PLUGGING AND ABANDONMENT AFFIDAVIT

Name and Address, Phone Number and/or Email of Permittee

Florence Copper Project
1575 W Hunt Hwy,
Florence, AZ 85132

Permit or EPA ID Number	API Number	Full Well Name
R9UIC-AZ3-FY11-1		O49-GL

State	County
Arizona	Pinal

Locate well in two directions from nearest lines of quarter section and drilling unit

Surface Location

NW 1/4 of NW 1/4 of Section 33 Township 4S Range 9E

Latitude 33.0449406

Longitude -111.4353851

ft. from (N/S) Line of quarter section

ft. from (E/W) Line of quarter section.

Well Class	Timing of Action (pick one)	Type of Action (pick one)
☐ Class I ☐ Class II ☑ Class III ☐ Class V	☑ Notice Prior to Work Date Expected to Commence March 2021 ☐ Report After Work Date Work Ended	☐ Well Rework ☑ Plugging and Abandonment ☐ Conversion to a Non-Injection Well

Provide a narrative description of the work planned to be performed, or that was performed. Use additional pages as necessary. See instructions.

A workover rig capable of performing the required abandonment operations at the required depths will be moved in and set up over the well. The well casing will be inspected to determine the depth to which the well remains open and if any obstructions are present in the casing; the presence and condition of any existing surface casing will also be documented. If necessary, the well casing will be cleaned out to the bottom of the deepest screen or perforation to enable placement of cement seals.

If surface casing is present, an attempt will be made to remove it. If removal of the surface casing is not feasible, it will be left in the hole and perforated as needed to allow an annular seal to be placed to a depth of at least 25 feet bgs. In areas of agricultural use, the surface casing will be cut at least 5 feet bgs and removed.

If the surface casing cannot be removed, it will be perforated from at least 20 feet below the bedrock-LBFU contact to at least 20 feet above the contact; from at least 20 feet below the base of the MFGU to at least 20 feet above the top of the MFGU; and from at least 25 feet bgs to 5 feet bgs.

A tremie pipe will be used to place Type V cement in the open well from the bottom of the well casing to the top of the well casing. Cement retainers, as described above, will be used to force cement grout into the annulus and behind perforated screen intervals, as necessary.

If the well casing has been obstructed, as much cement as possible will be placed from 100 feet below the LBFU-bedrock contact to the top of the casing.

The volume of Type V cement will be recorded and will not be less than the estimated volume of material required to fill each interval. All cement grout will consist of Type V cement, or equivalent approved in accordance with the UIC Permit.

Certification

I certify under the penalty of law that I have personally examined and am familiar with the information submitted in this document and all attachments and that, based on my inquiry of those individuals immediately responsible for obtaining the information, I believe that the information is true, accurate, and complete. I am aware that there are significant penalties for submitting false information, including the possibliity of fine and imprisonment. (Ref. 40 CFR § 144.32)

Name and Official Title *(Please type or print)*	Signature	Date Signed
Dan Johnson, VP - General Manager		10/3/2019

INSTRUCTIONS FOR FORM 7520-19

This form replaces forms 7520-12 and 7520-14. Use this form only when work is planned or has occurred that affects the well's construction or operation as an injection well, including work on the casing, tubing or packer (or for shallow Class V wells, the subsurface fluid emplacement network). Use one form per injection well. While reports or other information developed by contractors or service companies may be attached, this form must be signed by a responsible entity as described at 40 CFR 144.32. Note: operators closing Class V wells should use Form 7520-17.

NAME, ADDRESS, PHONE AND/OR EMAIL OF PERMITTEE: Enter the name and street address, city/town, state, and ZIP code of the permittee. Also provide an email address (if available) and/or a phone number.

PERMIT OR EPA ID NUMBER: Enter the well identification number or permit number assigned to the well by the EPA or the permitting authority.

API NUMBER: Enter the number assigned by the local jurisdiction (usually a State Oil and Gas Agency) using the American Petroleum Institute standard numbering system.

FULL WELL NAME: Enter the full name of the well or project.

Enter the **STATE** and **COUNTY** where the well is located. For States that do not have counties, use the name of that State's equivalent jurisdiction at a more local level.

WELL LOCATION: Fill in the complete township, range, and section to the nearest quarter-quarter section. A township is north or south of the baseline, and a range is east or west of the principal meridian (e.g., T12N, R34W). Also include the distance, in feet, from the nearest north or south line and nearest east or west line of the quarter-section. Also, enter the **latitude** and **longitude** of the well in decimal degrees, to five or six places if possible; be sure to include a negative sign for the longitude of a well in the Western Hemisphere and a negative sign for the latitude of a well in the Southern Hemisphere.

Enter the **WELL CLASS,** i.e., the class of injection well as defined in 40 CFR 144.6.

TIMING OF THE ACTION: Check ***Notice prior to work*** if the activity has not yet occurred (i.e., is planned). Check ***Report after work*** if the activity described has already occurred. As appropriate, include the date the activity is expected to start or the date the activity was completed. (Note this may not be available, e.g., for a plugging plan submitted with a permit application.)

TYPE OF ACTION: Check the appropriate box to describe the kind of activity being reported. Check ***Well Rework*** for work that was/will be performed on the well after it has already been in operation as an injection well. Check ***Plugging and Abandonment*** to report on plans for or descriptions of final closure/plugging after use as an injection well. Check ***Conversion to a Non-Injection Well*** if the well is to be converted to something other than an injection well.

Provide a **NARRATIVE DESCRIPTION** of the work planned to be performed, or that was performed. The narrative should include a description of the main procedures planned or that occurred during the work activity. A service company report, daily report, or similar document may be attached if it includes all the requested information and is clear and legible.

For well reworks, include the following information: The reason for the well rework; depths of activity; type of activity; changes to injection well configuration, well casing, or cement behind casing; any plug added to the well and its depth; any newly drilled interval and its depth; method(s) to demonstrate that the well has mechanical integrity (as applicable); and any deviations from the approved rework plan (as applicable).

For a well plugging plan, include the following information: Reason for the well plugging; number of plugs placed, and their depths; materials used as plugs (e.g., cast iron bridge plug, cement, cement retainer); method to set plugs; and wait-on-cement times, if any. Also provide one or more cost estimates from an independent firm in the business of plugging and abandoning wells to plug the well as described in the plan.

For well plugging affidavit, include the following information: Reason for the well plugging; number of plugs placed, and their depths; materials used as plugs (e.g., cast iron bridge plug, cement, cement retainer); method to set plugs; wait-on-cement times, if any; and any deviations from the approved plugging plan (if applicable).

For conversion to a non-injection well, include the following information: Depths of activity; type of activity; changes to injection well configuration, well casing, or cement behind casing; any plug added to the well and its depth; any newly drilled interval and its depth; depths of new perforations; and method(s) to demonstrate that the well has mechanical integrity (as applicable).

For all of the above activities, include a well sketch depicting the work, results of well tests/logging performed, service company tickets, and any other available information demonstrating how the work was/is to be performed. Also, specify whether depths are below ground surface, relative to Kelly bushing, etc.

CERTIFICATION: This form must be signed and dated by either: a responsible corporate officer for a corporation, by a general partner for a partnership, by the proprietor of a sole proprietorship, or by a principal executive or ranking elected official for a public agency.

PAPERWORK REDUCTION ACT NOTICE: The public reporting and recordkeeping burden for this collection of information is estimated to average between 6.0 and 7.9 hours per response, depending on the injection well class. Burden means the total time, effort, or financial resource expended by persons to generate, maintain, retain, or disclose or provide information to or for a Federal Agency. This includes the time needed to review instructions; develop, acquire, install, and utilize technology and systems for the purposes of collecting, validating, and verifying information, processing and maintaining information, and disclosing and providing information; adjust the existing ways to comply with any previously applicable instructions and requirements; train personnel to be able to respond to the collection of information; search data sources; complete and review the collection of information; and, transmit or otherwise disclose the information. An agency may not conduct or sponsor, and a person is not required to respond to, a collection of information unless it displays a currently valid OMB control number. Send comments on the Agency's need for this information, the accuracy of the provided burden estimates, and any suggested methods for minimizing respondent burden, including the use of automated collection techniques to Director, Collection Strategies Division, U.S. Environmental Protection Agency (2822), 1200 Pennsylvania Ave., NW., Washington, D.C. 20460. Include the OMB control number in any correspondence. Do not send the completed forms to this address.

Saved by: MNICHOLLS Printed: 7/25/2019 7:20 PM Sheet: HA-FIG-A-L(2)
\\HALEYALDRICH.COM\SHARE\PHX_COMMON\PROJECTS\FLORENCE COPPER\132473 FLORENCE GROUNDWATER PERMITTING\CAD\132473_000-OBSERVATION_WELL_CONSTRUCTION DIAGRAM.DWG

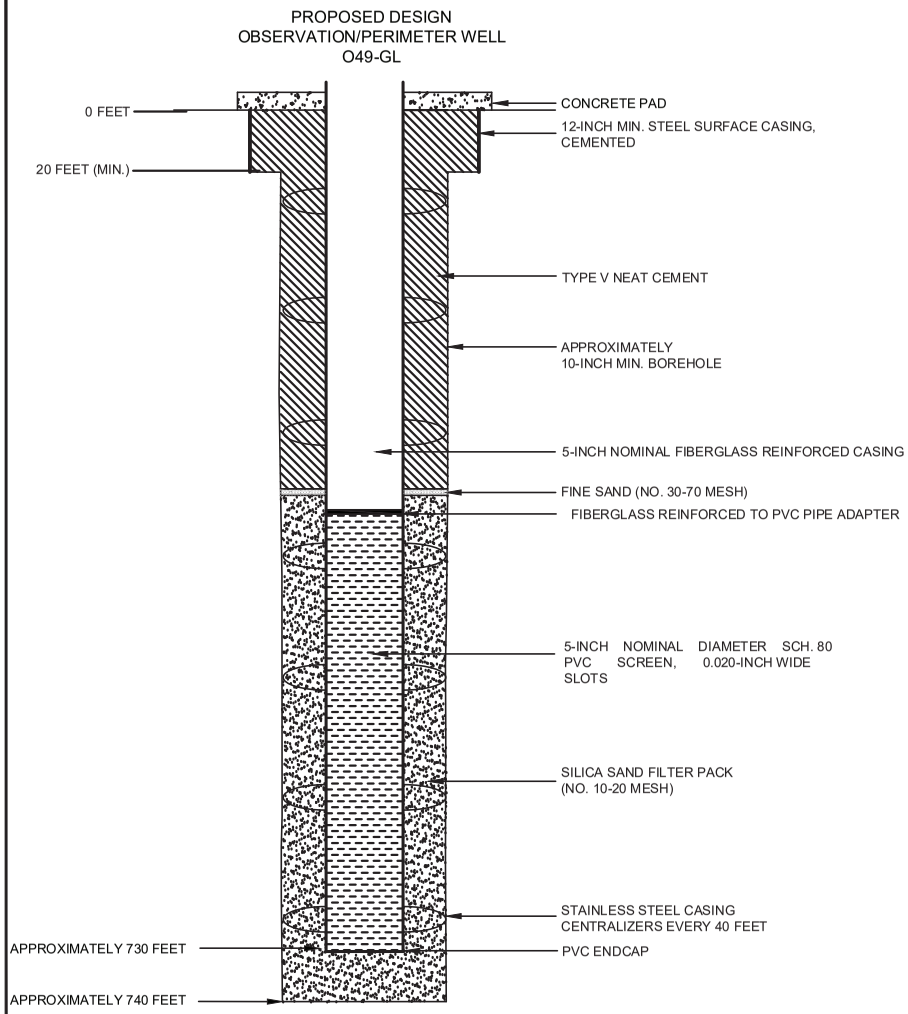

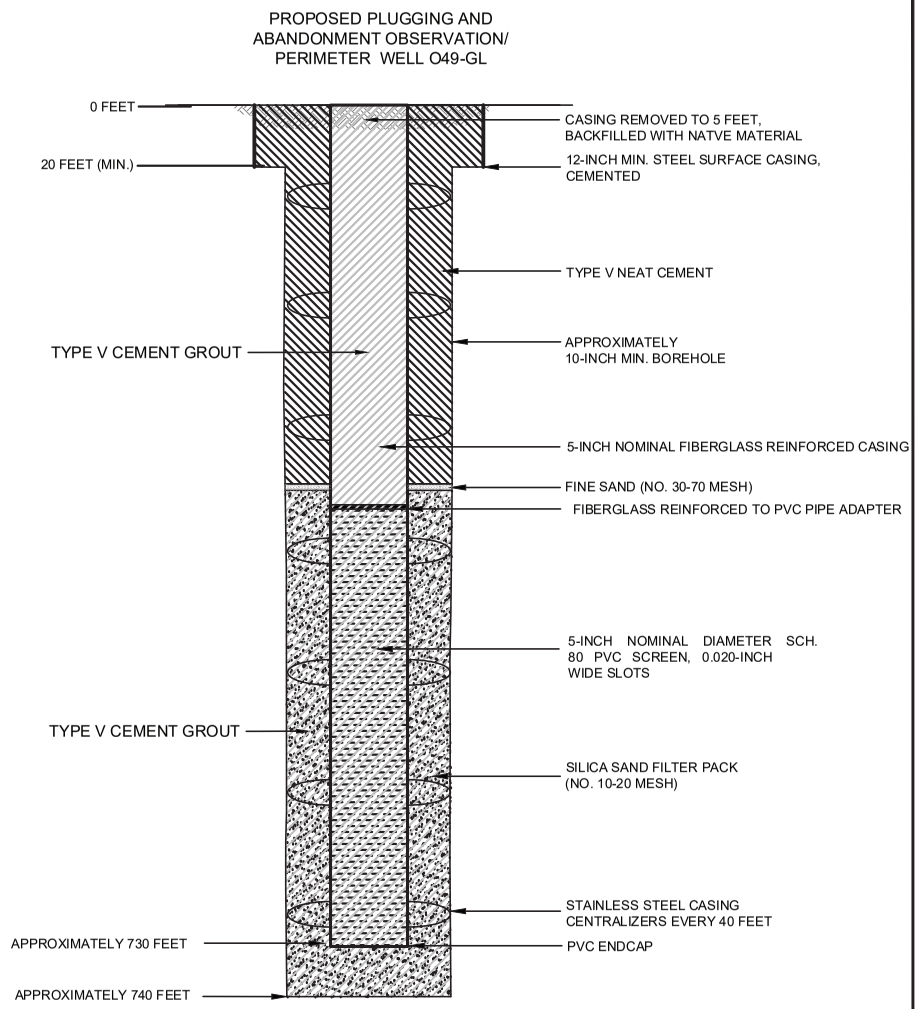

NOTES

1. WELL DESIGN DETAILS ARE BASED ON CORE HOLE AND WELL LOG RECORDS.

HALEY ALDRICH

FLORENCE COPPER, INC.
FLORENCE, ARIZONA

ABANDONMENT SCHEMATIC
OBSERVATION/PERIMETER
WELL O49-GL

SEPTEMBER 2019
SCALE: AS SHOWN

FIGURE 1

OMB No. 2040-0042 Approval Expires 4/30/2022

United States Environmental Protection Agency

WELL REWORK RECORD, PLUGGING AND ABANDONMENT PLAN, OR PLUGGING AND ABANDONMENT AFFIDAVIT

Name and Address, Phone Number and/or Email of Permittee

Florence Copper Project
1575 W Hunt Hwy,
Florence, AZ 85132

Permit or EPA ID Number	API Number	Full Well Name
R9UIC-AZ3-FY11-1		O49-O

State	County
Arizona	Pinal

Locate well in two directions from nearest lines of quarter section and drilling unit

Surface Location

NW 1/4 of NW 1/4 of Section 33 Township 4S Range 9E

Latitude 33.04494394

Longitude -111.4352552

_____ ft. from (N/S) _____ Line of quarter section

_____ ft. from (E/W) _____ Line of quarter section.

Well Class	Timing of Action (pick one)	Type of Action (pick one)
☐ Class I ☐ Class II ☑ Class III ☐ Class V	☑ Notice Prior to Work Date Expected to Commence March 2021 ☐ Report After Work Date Work Ended	☐ Well Rework ☑ Plugging and Abandonment ☐ Conversion to a Non-Injection Well

Provide a narrative description of the work planned to be performed, or that was performed. Use additional pages as necessary. See instructions.

A workover rig capable of performing the required abandonment operations at the required depths will be moved in and set up over the well. The well casing will be inspected to determine the depth to which the well remains open and if any obstructions are present in the casing; the presence and condition of any existing surface casing will also be documented. If necessary, the well casing will be cleaned out to the bottom of the deepest screen or perforation to enable placement of cement seals.

If surface casing is present, an attempt will be made to remove it. If removal of the surface casing is not feasible, it will be left in the hole and perforated as needed to allow an annular seal to be placed to a depth of at least 25 feet bgs. In areas of agricultural use, the surface casing will be cut at least 5 feet bgs and removed.

If the surface casing cannot be removed, it will be perforated from at least 20 feet below the bedrock-LBFU contact to at least 20 feet above the contact; from at least 20 feet below the base of the MFGU to at least 20 feet above the top of the MFGU; and from at least 25 feet bgs to 5 feet bgs.

A tremie pipe will be used to place Type V cement in the open well from the bottom of the well casing to the top of the well casing. Cement retainers, as described above, will be used to force cement grout into the annulus and behind perforated screen intervals, as necessary.

If the well casing has been obstructed, as much cement as possible will be placed from 100 feet below the LBFU-bedrock contact to the top of the casing.

The volume of Type V cement will be recorded and will not be less than the estimated volume of material required to fill each interval. All cement grout will consist of Type V cement, or equivalent approved in accordance with the UIC Permit.

Certification

I certify under the penalty of law that I have personally examined and am familiar with the information submitted in this document and all attachments and that, based on my inquiry of those individuals immediately responsible for obtaining the information, I believe that the information is true, accurate, and complete. I am aware that there are significant penalties for submitting false information, including the possibliity of fine and imprisonment. (Ref. 40 CFR § 144.32)

Name and Official Title *(Please type or print)*	Signature	Date Signed
Dan Johnson, VP - General Manager		10/3/2019

INSTRUCTIONS FOR FORM 7520-19

This form replaces forms 7520-12 and 7520-14. Use this form only when work is planned or has occurred that affects the well's construction or operation as an injection well, including work on the casing, tubing or packer (or for shallow Class V wells, the subsurface fluid emplacement network). Use one form per injection well. While reports or other information developed by contractors or service companies may be attached, this form must be signed by a responsible entity as described at 40 CFR 144.32. Note: operators closing Class V wells should use Form 7520-17.

NAME, ADDRESS, PHONE AND/OR EMAIL OF PERMITTEE: Enter the name and street address, city/town, state, and ZIP code of the permittee. Also provide an email address (if available) and/or a phone number.

PERMIT OR EPA ID NUMBER: Enter the well identification number or permit number assigned to the well by the EPA or the permitting authority.

API NUMBER: Enter the number assigned by the local jurisdiction (usually a State Oil and Gas Agency) using the American Petroleum Institute standard numbering system.

FULL WELL NAME: Enter the full name of the well or project.

Enter the **STATE** and **COUNTY** where the well is located. For States that do not have counties, use the name of that State's equivalent jurisdiction at a more local level.

WELL LOCATION: Fill in the complete township, range, and section to the nearest quarter-quarter section. A township is north or south of the baseline, and a range is east or west of the principal meridian (e.g., T12N, R34W). Also include the distance, in feet, from the nearest north or south line and nearest east or west line of the quarter-section. Also, enter the **latitude** and **longitude** of the well in decimal degrees, to five or six places if possible; be sure to include a negative sign for the longitude of a well in the Western Hemisphere and a negative sign for the latitude of a well in the Southern Hemisphere.

Enter the **WELL CLASS,** i.e., the class of injection well as defined in 40 CFR 144.6.

TIMING OF THE ACTION: Check ***Notice prior to work*** if the activity has not yet occurred (i.e., is planned). Check ***Report after work*** if the activity described has already occurred. As appropriate, include the date the activity is expected to start or the date the activity was completed. (Note this may not be available, e.g., for a plugging plan submitted with a permit application.)

TYPE OF ACTION: Check the appropriate box to describe the kind of activity being reported. Check ***Well Rework*** for work that was/will be performed on the well after it has already been in operation as an injection well. Check ***Plugging and Abandonment*** to report on plans for or descriptions of final closure/plugging after use as an injection well. Check ***Conversion to a Non-Injection Well*** if the well is to be converted to something other than an injection well.

Provide a **NARRATIVE DESCRIPTION** of the work planned to be performed, or that was performed. The narrative should include a description of the main procedures planned or that occurred during the work activity. A service company report, daily report, or similar document may be attached if it includes all the requested information and is clear and legible.

For well reworks, include the following information: The reason for the well rework; depths of activity; type of activity; changes to injection well configuration, well casing, or cement behind casing; any plug added to the well and its depth; any newly drilled interval and its depth; method(s) to demonstrate that the well has mechanical integrity (as applicable); and any deviations from the approved rework plan (as applicable).

For a well plugging plan, include the following information: Reason for the well plugging; number of plugs placed, and their depths; materials used as plugs (e.g., cast iron bridge plug, cement, cement retainer); method to set plugs; and wait-on-cement times, if any. Also provide one or more cost estimates from an independent firm in the business of plugging and abandoning wells to plug the well as described in the plan.

For well plugging affidavit, include the following information: Reason for the well plugging; number of plugs placed, and their depths; materials used as plugs (e.g., cast iron bridge plug, cement, cement retainer); method to set plugs; wait-on-cement times, if any; and any deviations from the approved plugging plan (if applicable).

For conversion to a non-injection well, include the following information: Depths of activity; type of activity; changes to injection well configuration, well casing, or cement behind casing; any plug added to the well and its depth; any newly drilled interval and its depth; depths of new perforations; and method(s) to demonstrate that the well has mechanical integrity (as applicable).

For all of the above activities, include a well sketch depicting the work, results of well tests/logging performed, service company tickets, and any other available information demonstrating how the work was/is to be performed. Also, specify whether depths are below ground surface, relative to Kelly bushing, etc.

CERTIFICATION: This form must be signed and dated by either: a responsible corporate officer for a corporation, by a general partner for a partnership, by the proprietor of a sole proprietorship, or by a principal executive or ranking elected official for a public agency.

PAPERWORK REDUCTION ACT NOTICE: The public reporting and recordkeeping burden for this collection of information is estimated to average between 6.0 and 7.9 hours per response, depending on the injection well class. Burden means the total time, effort, or financial resource expended by persons to generate, maintain, retain, or disclose or provide information to or for a Federal Agency. This includes the time needed to review instructions; develop, acquire, install, and utilize technology and systems for the purposes of collecting, validating, and verifying information, processing and maintaining information, and disclosing and providing information; adjust the existing ways to comply with any previously applicable instructions and requirements; train personnel to be able to respond to the collection of information; search data sources; complete and review the collection of information; and, transmit or otherwise disclose the information. An agency may not conduct or sponsor, and a person is not required to respond to, a collection of information unless it displays a currently valid OMB control number. Send comments on the Agency's need for this information, the accuracy of the provided burden estimates, and any suggested methods for minimizing respondent burden, including the use of automated collection techniques to Director, Collection Strategies Division, U.S. Environmental Protection Agency (2822), 1200 Pennsylvania Ave., NW., Washington, D.C. 20460. Include the OMB control number in any correspondence. Do not send the completed forms to this address.

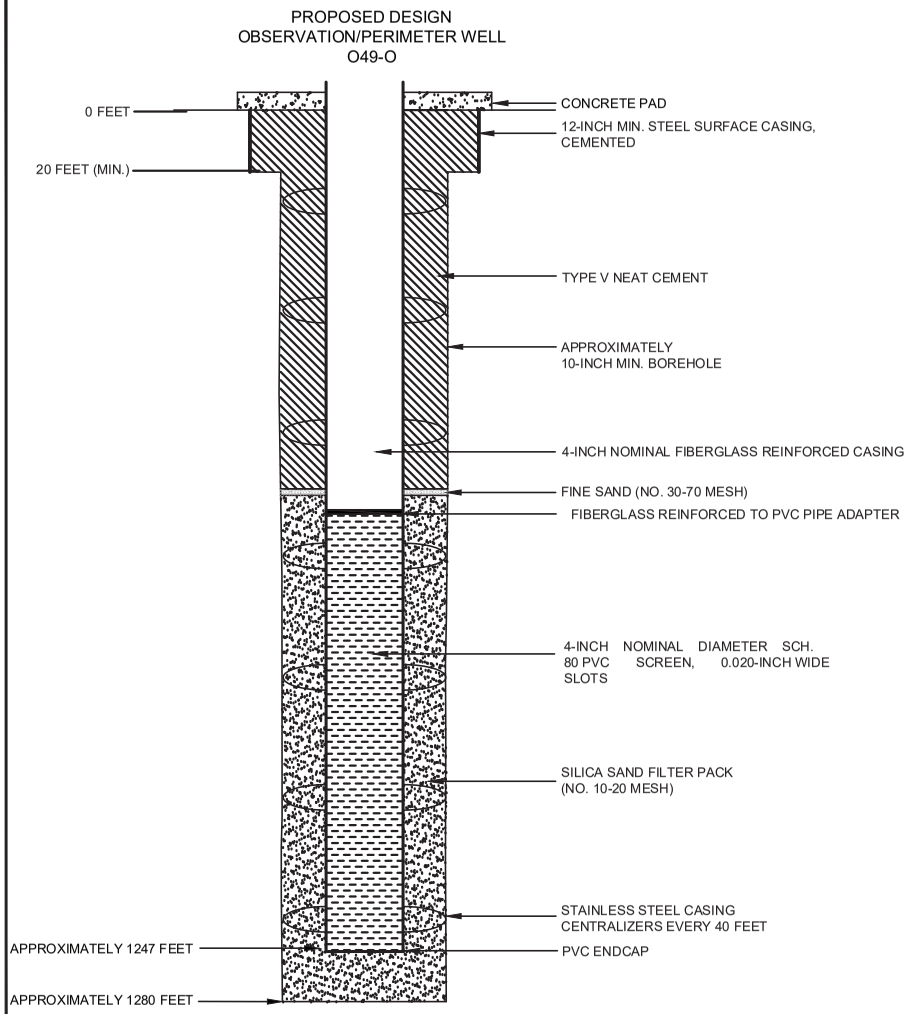

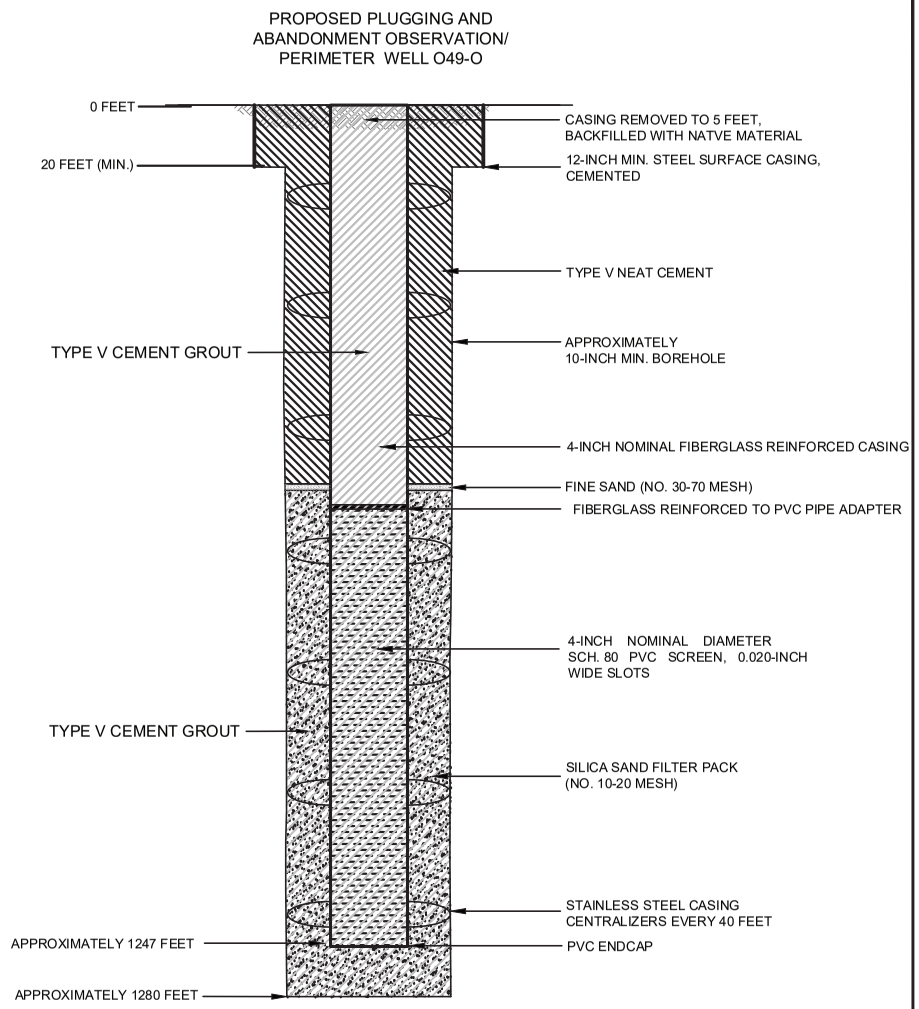

NOTES

1. WELL DESIGN DETAILS ARE BASED ON CORE HOLE AND WELL LOG RECORDS.

HALEY ALDRICH

FLORENCE COPPER, INC.
FLORENCE, ARIZONA

ABANDONMENT SCHEMATIC
OBSERVATION/PERIMETER
WELL O49-O

SEPTEMBER 2019
SCALE: AS SHOWN

FIGURE 1

OMB No. 2040-0042 Approval Expires 4/30/2022

United States Environmental Protection Agency

WELL REWORK RECORD, PLUGGING AND ABANDONMENT PLAN, OR PLUGGING AND ABANDONMENT AFFIDAVIT

Name and Address, Phone Number and/or Email of Permittee

Florence Copper Project
1575 W Hunt Hwy,
Florence, AZ 85132

Permit or EPA ID Number	API Number	Full Well Name
R9UIC-AZ3-FY11-1		OB-1

State	County
Arizona	Pinal

Locate well in two directions from nearest lines of quarter section and drilling unit

Latitude 33.04882831

Longitude -111.4315015

Surface Location

SE **1/4 of** SW **1/4 of Section** 28 **Township** 4S **Range** 9E

_____ **ft. from (N/S)** _____ **Line of quarter section**

_____ **ft. from (E/W)** _____ **Line of quarter section.**

Well Class	Timing of Action (pick one)	Type of Action (pick one)
☐ Class I ☐ Class II ☑ Class III ☐ Class V	☑ Notice Prior to Work Date Expected to Commence March 2021 ☐ Report After Work Date Work Ended	☐ Well Rework ☑ Plugging and Abandonment ☐ Conversion to a Non-Injection Well

Provide a narrative description of the work planned to be performed, or that was performed. Use additional pages as necessary. See instructions.

A workover rig capable of performing the required abandonment operations at the required depths will be moved in and set up over the well. The well casing will be inspected to determine the depth to which the well remains open and if any obstructions are present in the casing; the presence and condition of any existing surface casing will also be documented. If necessary, the well casing will be cleaned out to the bottom of the deepest screen or perforation to enable placement of cement seals.

If surface casing is present, an attempt will be made to remove it. If removal of the surface casing is not feasible, it will be left in the hole and perforated as needed to allow an annular seal to be placed to a depth of at least 25 feet bgs. In areas of agricultural use, the surface casing will be cut at least 5 feet bgs and removed.

If the surface casing cannot be removed, it will be perforated from at least 20 feet below the bedrock-LBFU contact to at least 20 feet above the contact; from at least 20 feet below the base of the MFGU to at least 20 feet above the top of the MFGU; and from at least 25 feet bgs to 5 feet bgs.

A tremie pipe will be used to place Type V cement in the open well from the bottom of the well casing to the top of the well casing. Cement retainers, as described above, will be used to force cement grout into the annulus and behind perforated screen intervals, as necessary.

If the well casing has been obstructed, as much cement as possible will be placed from 100 feet below the LBFU-bedrock contact to the top of the casing.

The volume of Type V cement will be recorded and will not be less than the estimated volume of material required to fill each interval. All cement grout will consist of Type V cement, or equivalent approved in accordance with the UIC Permit.

Certification

I certify under the penalty of law that I have personally examined and am familiar with the information submitted in this document and all attachments and that, based on my inquiry of those individuals immediately responsible for obtaining the information, I believe that the information is true, accurate, and complete. I am aware that there are significant penalties for submitting false information, including the possibliity of fine and imprisonment. (Ref. 40 CFR § 144.32)

Name and Official Title *(Please type or print)*	Signature	Date Signed
Dan Johnson, VP - General Manager		10/3/2019

INSTRUCTIONS FOR FORM 7520-19

This form replaces forms 7520-12 and 7520-14. Use this form only when work is planned or has occurred that affects the well's construction or operation as an injection well, including work on the casing, tubing or packer (or for shallow Class V wells, the subsurface fluid emplacement network). Use one form per injection well. While reports or other information developed by contractors or service companies may be attached, this form must be signed by a responsible entity as described at 40 CFR 144.32. Note: operators closing Class V wells should use Form 7520-17.

NAME, ADDRESS, PHONE AND/OR EMAIL OF PERMITTEE: Enter the name and street address, city/town, state, and ZIP code of the permittee. Also provide an email address (if available) and/or a phone number.

PERMIT OR EPA ID NUMBER: Enter the well identification number or permit number assigned to the well by the EPA or the permitting authority.

API NUMBER: Enter the number assigned by the local jurisdiction (usually a State Oil and Gas Agency) using the American Petroleum Institute standard numbering system.

FULL WELL NAME: Enter the full name of the well or project.

Enter the **STATE** and **COUNTY** where the well is located. For States that do not have counties, use the name of that State's equivalent jurisdiction at a more local level.

WELL LOCATION: Fill in the complete township, range, and section to the nearest quarter-quarter section. A township is north or south of the baseline, and a range is east or west of the principal meridian (e.g., T12N, R34W). Also include the distance, in feet, from the nearest north or south line and nearest east or west line of the quarter-section. Also, enter the **latitude** and **longitude** of the well in decimal degrees, to five or six places if possible; be sure to include a negative sign for the longitude of a well in the Western Hemisphere and a negative sign for the latitude of a well in the Southern Hemisphere.

Enter the **WELL CLASS,** i.e., the class of injection well as defined in 40 CFR 144.6.

TIMING OF THE ACTION: Check ***Notice prior to work*** if the activity has not yet occurred (i.e., is planned). Check ***Report after work*** if the activity described has already occurred. As appropriate, include the date the activity is expected to start or the date the activity was completed. (Note this may not be available, e.g., for a plugging plan submitted with a permit application.)

TYPE OF ACTION: Check the appropriate box to describe the kind of activity being reported. Check ***Well Rework*** for work that was/will be performed on the well after it has already been in operation as an injection well. Check ***Plugging and Abandonment*** to report on plans for or descriptions of final closure/plugging after use as an injection well. Check ***Conversion to a Non-Injection Well*** if the well is to be converted to something other than an injection well.

Provide a **NARRATIVE DESCRIPTION** of the work planned to be performed, or that was performed. The narrative should include a description of the main procedures planned or that occurred during the work activity. A service company report, daily report, or similar document may be attached if it includes all the requested information and is clear and legible.

For well reworks, include the following information: The reason for the well rework; depths of activity; type of activity; changes to injection well configuration, well casing, or cement behind casing; any plug added to the well and its depth; any newly drilled interval and its depth; method(s) to demonstrate that the well has mechanical integrity (as applicable); and any deviations from the approved rework plan (as applicable).

For a well plugging plan, include the following information: Reason for the well plugging; number of plugs placed, and their depths; materials used as plugs (e.g., cast iron bridge plug, cement, cement retainer); method to set plugs; and wait-on-cement times, if any. Also provide one or more cost estimates from an independent firm in the business of plugging and abandoning wells to plug the well as described in the plan.

For well plugging affidavit, include the following information: Reason for the well plugging; number of plugs placed, and their depths; materials used as plugs (e.g., cast iron bridge plug, cement, cement retainer); method to set plugs; wait-on-cement times, if any; and any deviations from the approved plugging plan (if applicable).

For conversion to a non-injection well, include the following information: Depths of activity; type of activity; changes to injection well configuration, well casing, or cement behind casing; any plug added to the well and its depth; any newly drilled interval and its depth; depths of new perforations; and method(s) to demonstrate that the well has mechanical integrity (as applicable).

For all of the above activities, include a well sketch depicting the work, results of well tests/logging performed, service company tickets, and any other available information demonstrating how the work was/is to be performed. Also, specify whether depths are below ground surface, relative to Kelly bushing, etc.

CERTIFICATION: This form must be signed and dated by either: a responsible corporate officer for a corporation, by a general partner for a partnership, by the proprietor of a sole proprietorship, or by a principal executive or ranking elected official for a public agency.

PAPERWORK REDUCTION ACT NOTICE: The public reporting and recordkeeping burden for this collection of information is estimated to average between 6.0 and 7.9 hours per response, depending on the injection well class. Burden means the total time, effort, or financial resource expended by persons to generate, maintain, retain, or disclose or provide information to or for a Federal Agency. This includes the time needed to review instructions; develop, acquire, install, and utilize technology and systems for the purposes of collecting, validating, and verifying information, processing and maintaining information, and disclosing and providing information; adjust the existing ways to comply with any previously applicable instructions and requirements; train personnel to be able to respond to the collection of information; search data sources; complete and review the collection of information; and, transmit or otherwise disclose the information. An agency may not conduct or sponsor, and a person is not required to respond to, a collection of information unless it displays a currently valid OMB control number. Send comments on the Agency's need for this information, the accuracy of the provided burden estimates, and any suggested methods for minimizing respondent burden, including the use of automated collection techniques to Director, Collection Strategies Division, U.S. Environmental Protection Agency (2822), 1200 Pennsylvania Ave., NW., Washington, D.C. 20460. Include the OMB control number in any correspondence. Do not send the completed forms to this address.

Saved by: MNICHOLLS Printed: 7/25/2019 7:20 PM Sheet: HA-FIG-A-L(2)
\\HALEYALDRICH.COM\SHARE\PHX_COMMON\PROJECTS\FLORENCE COPPER\132473 FLORENCE GROUNDWATER PERMITTING\CAD\132473_000-OBSERVATION_WELL_CONSTRUCTION DIAGRAM.DWG

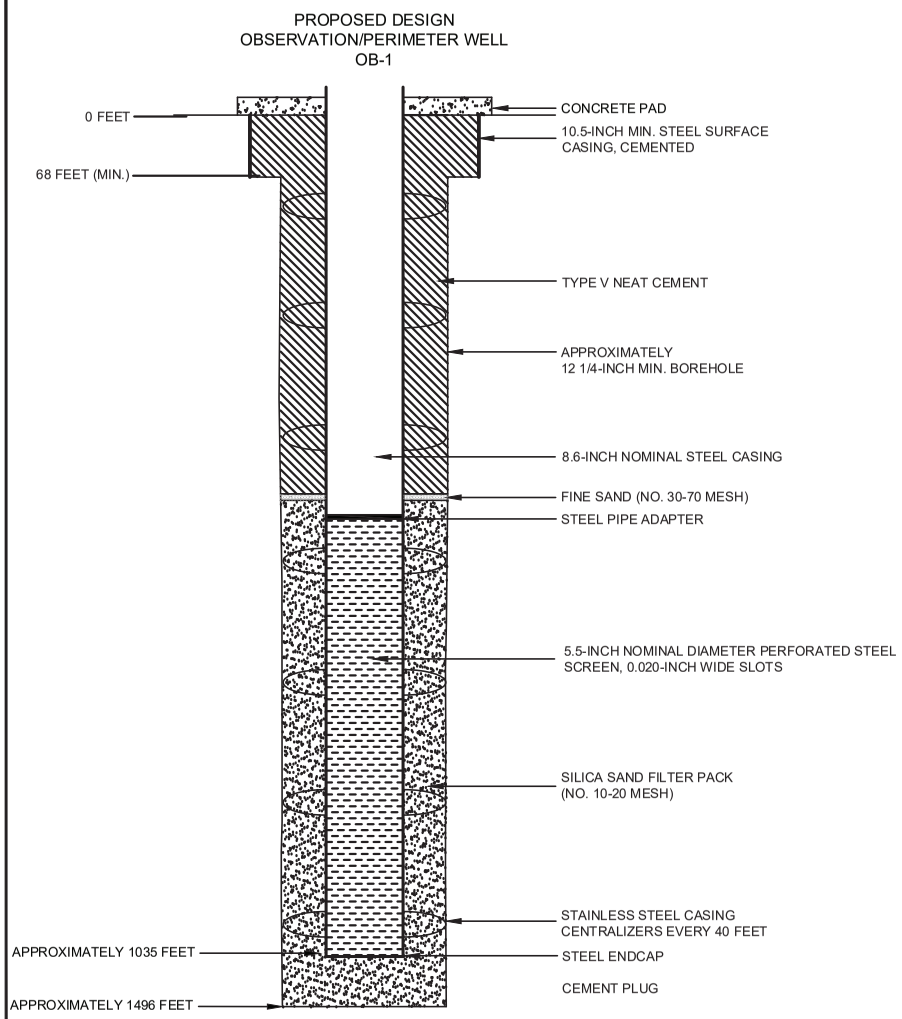

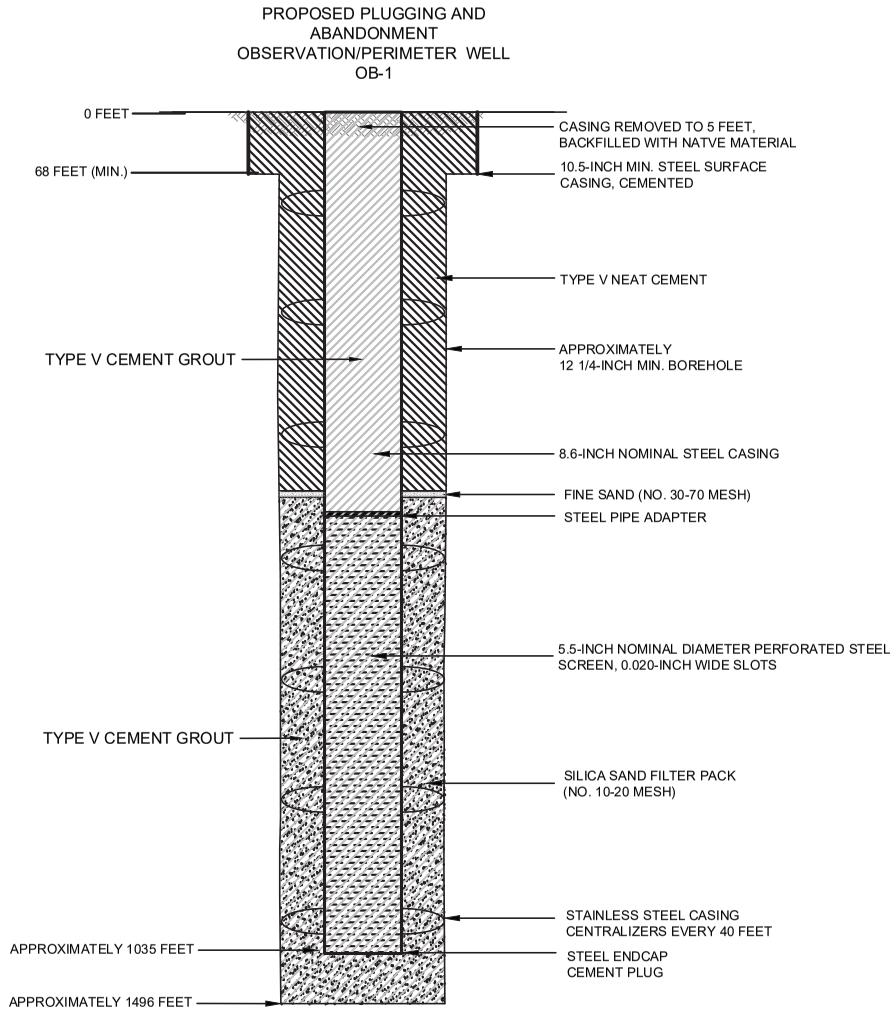

NOTES

1. WELL DESIGN DETAILS ARE BASED ON CORE HOLE AND WELL LOG RECORDS.

HALEY ALDRICH

FLORENCE COPPER, INC.
FLORENCE, ARIZONA

ABANDONMENT SCHEMATIC
OBSERVATION/PERIMETER WELL
OB-1 (OW-1, OBS-1, OB-1 CONOCO)

SEPTEMBER 2019
SCALE: AS SHOWN

FIGURE 1

OMB No. 2040-0042 Approval Expires 4/30/2022

United States Environmental Protection Agency

WELL REWORK RECORD, PLUGGING AND ABANDONMENT PLAN, OR PLUGGING AND ABANDONMENT AFFIDAVIT

Name and Address, Phone Number and/or Email of Permittee

Florence Copper Project
1575 W Hunt Hwy,
Florence, AZ 85132

Permit or EPA ID Number	API Number	Full Well Name
R9UIC-AZ3-FY11-1		OB1-1

State	County
Arizona	Pinal

Locate well in two directions from nearest lines of quarter section and drilling unit

Surface Location

NE 1/4 of SW 1/4 of Section 28 Township 4S Range 9E

Latitude 33.05106588

Longitude -111.4311982

ft. from (N/S) Line of quarter section

ft. from (E/W) Line of quarter section.

Well Class	Timing of Action (pick one)	Type of Action (pick one)
☐ Class I ☐ Class II ☑ Class III ☐ Class V	☑ Notice Prior to Work Date Expected to Commence March 2021 ☐ Report After Work Date Work Ended	☐ Well Rework ☑ Plugging and Abandonment ☐ Conversion to a Non-Injection Well

Provide a narrative description of the work planned to be performed, or that was performed. Use additional pages as necessary. See instructions.

A workover rig capable of performing the required abandonment operations at the required depths will be moved in and set up over the well. The well casing will be inspected to determine the depth to which the well remains open and if any obstructions are present in the casing; the presence and condition of any existing surface casing will also be documented. If necessary, the well casing will be cleaned out to the bottom of the deepest screen or perforation to enable placement of cement seals.

If surface casing is present, an attempt will be made to remove it. If removal of the surface casing is not feasible, it will be left in the hole and perforated as needed to allow an annular seal to be placed to a depth of at least 25 feet bgs. In areas of agricultural use, the surface casing will be cut at least 5 feet bgs and removed.

If the surface casing cannot be removed, it will be perforated from at least 20 feet below the bedrock-LBFU contact to at least 20 feet above the contact; from at least 20 feet below the base of the MFGU to at least 20 feet above the top of the MFGU; and from at least 25 feet bgs to 5 feet bgs.

A tremie pipe will be used to place Type V cement in the open well from the bottom of the well casing to the top of the well casing. Cement retainers, as described above, will be used to force cement grout into the annulus and behind perforated screen intervals, as necessary.

If the well casing has been obstructed, as much cement as possible will be placed from 100 feet below the LBFU-bedrock contact to the top of the casing.

The volume of Type V cement will be recorded and will not be less than the estimated volume of material required to fill each interval. All cement grout will consist of Type V cement, or equivalent approved in accordance with the UIC Permit.

Certification

I certify under the penalty of law that I have personally examined and am familiar with the information submitted in this document and all attachments and that, based on my inquiry of those individuals immediately responsible for obtaining the information, I believe that the information is true, accurate, and complete. I am aware that there are significant penalties for submitting false information, including the possibliity of fine and imprisonment. (Ref. 40 CFR § 144.32)

Name and Official Title *(Please type or print)*	Signature	Date Signed
Dan Johnson, VP - General Manager		10/3/2019

INSTRUCTIONS FOR FORM 7520-19

This form replaces forms 7520-12 and 7520-14. Use this form only when work is planned or has occurred that affects the well's construction or operation as an injection well, including work on the casing, tubing or packer (or for shallow Class V wells, the subsurface fluid emplacement network). Use one form per injection well. While reports or other information developed by contractors or service companies may be attached, this form must be signed by a responsible entity as described at 40 CFR 144.32. Note: operators closing Class V wells should use Form 7520-17.

NAME, ADDRESS, PHONE AND/OR EMAIL OF PERMITTEE: Enter the name and street address, city/town, state, and ZIP code of the permittee. Also provide an email address (if available) and/or a phone number.

PERMIT OR EPA ID NUMBER: Enter the well identification number or permit number assigned to the well by the EPA or the permitting authority.

API NUMBER: Enter the number assigned by the local jurisdiction (usually a State Oil and Gas Agency) using the American Petroleum Institute standard numbering system.

FULL WELL NAME: Enter the full name of the well or project.

Enter the **STATE** and **COUNTY** where the well is located. For States that do not have counties, use the name of that State's equivalent jurisdiction at a more local level.

WELL LOCATION: Fill in the complete township, range, and section to the nearest quarter-quarter section. A township is north or south of the baseline, and a range is east or west of the principal meridian (e.g., T12N, R34W). Also include the distance, in feet, from the nearest north or south line and nearest east or west line of the quarter-section. Also, enter the **latitude** and **longitude** of the well in decimal degrees, to five or six places if possible; be sure to include a negative sign for the longitude of a well in the Western Hemisphere and a negative sign for the latitude of a well in the Southern Hemisphere.

Enter the **WELL CLASS,** i.e., the class of injection well as defined in 40 CFR 144.6.

TIMING OF THE ACTION: Check ***Notice prior to work*** if the activity has not yet occurred (i.e., is planned). Check ***Report after work*** if the activity described has already occurred. As appropriate, include the date the activity is expected to start or the date the activity was completed. (Note this may not be available, e.g., for a plugging plan submitted with a permit application.)

TYPE OF ACTION: Check the appropriate box to describe the kind of activity being reported. Check ***Well Rework*** for work that was/will be performed on the well after it has already been in operation as an injection well. Check ***Plugging and Abandonment*** to report on plans for or descriptions of final closure/plugging after use as an injection well. Check ***Conversion to a Non-Injection Well*** if the well is to be converted to something other than an injection well.

Provide a **NARRATIVE DESCRIPTION** of the work planned to be performed, or that was performed. The narrative should include a description of the main procedures planned or that occurred during the work activity. A service company report, daily report, or similar document may be attached if it includes all the requested information and is clear and legible.

For well reworks, include the following information: The reason for the well rework; depths of activity; type of activity; changes to injection well configuration, well casing, or cement behind casing; any plug added to the well and its depth; any newly drilled interval and its depth; method(s) to demonstrate that the well has mechanical integrity (as applicable); and any deviations from the approved rework plan (as applicable).

For a well plugging plan, include the following information: Reason for the well plugging; number of plugs placed, and their depths; materials used as plugs (e.g., cast iron bridge plug, cement, cement retainer); method to set plugs; and wait-on-cement times, if any. Also provide one or more cost estimates from an independent firm in the business of plugging and abandoning wells to plug the well as described in the plan.

For well plugging affidavit, include the following information: Reason for the well plugging; number of plugs placed, and their depths; materials used as plugs (e.g., cast iron bridge plug, cement, cement retainer); method to set plugs; wait-on-cement times, if any; and any deviations from the approved plugging plan (if applicable).

For conversion to a non-injection well, include the following information: Depths of activity; type of activity; changes to injection well configuration, well casing, or cement behind casing; any plug added to the well and its depth; any newly drilled interval and its depth; depths of new perforations; and method(s) to demonstrate that the well has mechanical integrity (as applicable).

For all of the above activities, include a well sketch depicting the work, results of well tests/logging performed, service company tickets, and any other available information demonstrating how the work was/is to be performed. Also, specify whether depths are below ground surface, relative to Kelly bushing, etc.

CERTIFICATION: This form must be signed and dated by either: a responsible corporate officer for a corporation, by a general partner for a partnership, by the proprietor of a sole proprietorship, or by a principal executive or ranking elected official for a public agency.

PAPERWORK REDUCTION ACT NOTICE: The public reporting and recordkeeping burden for this collection of information is estimated to average between 6.0 and 7.9 hours per response, depending on the injection well class. Burden means the total time, effort, or financial resource expended by persons to generate, maintain, retain, or disclose or provide information to or for a Federal Agency. This includes the time needed to review instructions; develop, acquire, install, and utilize technology and systems for the purposes of collecting, validating, and verifying information, processing and maintaining information, and disclosing and providing information; adjust the existing ways to comply with any previously applicable instructions and requirements; train personnel to be able to respond to the collection of information; search data sources; complete and review the collection of information; and, transmit or otherwise disclose the information. An agency may not conduct or sponsor, and a person is not required to respond to, a collection of information unless it displays a currently valid OMB control number. Send comments on the Agency's need for this information, the accuracy of the provided burden estimates, and any suggested methods for minimizing respondent burden, including the use of automated collection techniques to Director, Collection Strategies Division, U.S. Environmental Protection Agency (2822), 1200 Pennsylvania Ave., NW., Washington, D.C. 20460. Include the OMB control number in any correspondence. Do not send the completed forms to this address.

PROPOSED DESIGN OBSERVATION/
PERIMETER WELL OB1-1

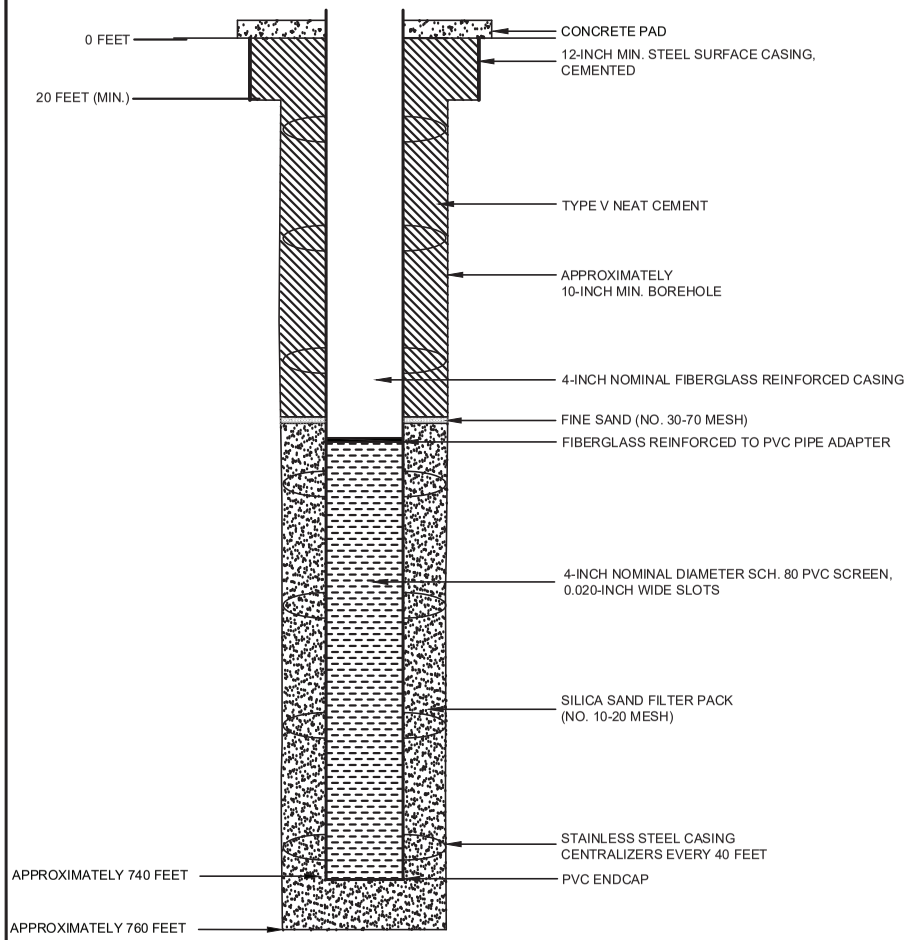

PROPOSED PLUGGING AND
ABANDONMENT
OBSERVATION/PERIMETER WELL OB1-1

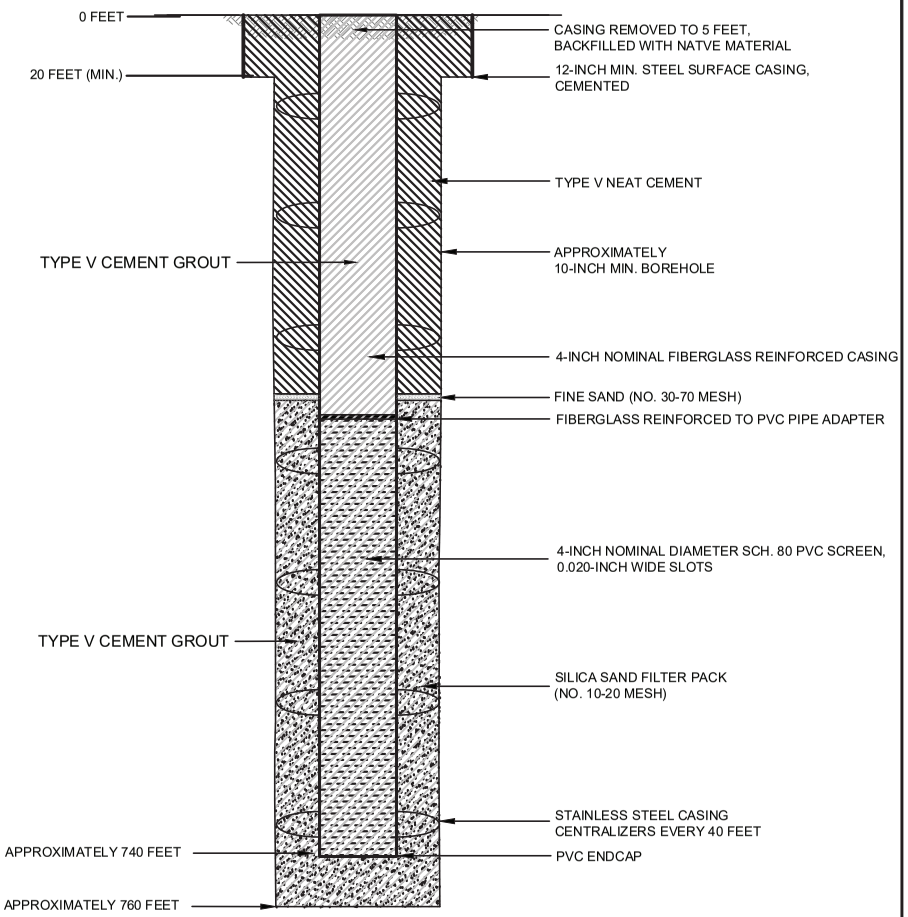

NOTES

1. WELL DESIGN DETAILS ARE BASED ON CORE HOLE AND WELL LOG RECORDS.

HALEY ALDRICH

FLORENCE COPPER, INC.
FLORENCE, ARIZONA

ABANDONMENT SCHEMATIC
OBSERVATION/PERIMETER WELL
OB1-1

SEPTEMBER 2019
SCALE: AS SHOWN

FIGURE 1

OMB No. 2040-0042 Approval Expires 4/30/2022

United States Environmental Protection Agency

WELL REWORK RECORD, PLUGGING AND ABANDONMENT PLAN, OR PLUGGING AND ABANDONMENT AFFIDAVIT

Name and Address, Phone Number and/or Email of Permittee

Florence Copper Project
1575 W Hunt Hwy,
Florence, AZ 85132

Permit or EPA ID Number	API Number	Full Well Name
R9UIC-AZ3-FY11-1		OB-2

State	County
Arizona	Pinal

Locate well in two directions from nearest lines of quarter section and drilling unit

Latitude 33.04974225

Longitude -111.4303771

Surface Location

NE **1/4 of** SW **1/4 of Section** 28 **Township** 4S **Range** 9E

_____ **ft. from (N/S)** _____ **Line of quarter section**

_____ **ft. from (E/W)** _____ **Line of quarter section.**

Well Class	Timing of Action (pick one)	Type of Action (pick one)
☐ Class I ☐ Class II ☑ Class III ☐ Class V	☑ Notice Prior to Work Date Expected to Commence March 2021 ☐ Report After Work Date Work Ended	☐ Well Rework ☑ Plugging and Abandonment ☐ Conversion to a Non-Injection Well

Provide a narrative description of the work planned to be performed, or that was performed. Use additional pages as necessary. See instructions.

A workover rig capable of performing the required abandonment operations at the required depths will be moved in and set up over the well. The well casing will be inspected to determine the depth to which the well remains open and if any obstructions are present in the casing; the presence and condition of any existing surface casing will also be documented. If necessary, the well casing will be cleaned out to the bottom of the deepest screen or perforation to enable placement of cement seals.

If surface casing is present, an attempt will be made to remove it. If removal of the surface casing is not feasible, it will be left in the hole and perforated as needed to allow an annular seal to be placed to a depth of at least 25 feet bgs. In areas of agricultural use, the surface casing will be cut at least 5 feet bgs and removed.

If the surface casing cannot be removed, it will be perforated from at least 20 feet below the bedrock-LBFU contact to at least 20 feet above the contact; from at least 20 feet below the base of the MFGU to at least 20 feet above the top of the MFGU; and from at least 25 feet bgs to 5 feet bgs.

A tremie pipe will be used to place Type V cement in the open well from the bottom of the well casing to the top of the well casing. Cement retainers, as described above, will be used to force cement grout into the annulus and behind perforated screen intervals, as necessary.

If the well casing has been obstructed, as much cement as possible will be placed from 100 feet below the LBFU-bedrock contact to the top of the casing.

The volume of Type V cement will be recorded and will not be less than the estimated volume of material required to fill each interval. All cement grout will consist of Type V cement, or equivalent approved in accordance with the UIC Permit.

Certification

I certify under the penalty of law that I have personally examined and am familiar with the information submitted in this document and all attachments and that, based on my inquiry of those individuals immediately responsible for obtaining the information, I believe that the information is true, accurate, and complete. I am aware that there are significant penalties for submitting false information, including the possibliity of fine and imprisonment. (Ref. 40 CFR § 144.32)

Name and Official Title *(Please type or print)*	Signature	Date Signed
Dan Johnson, VP - General Manager		10/3/2019

INSTRUCTIONS FOR FORM 7520-19

This form replaces forms 7520-12 and 7520-14. Use this form only when work is planned or has occurred that affects the well's construction or operation as an injection well, including work on the casing, tubing or packer (or for shallow Class V wells, the subsurface fluid emplacement network). Use one form per injection well. While reports or other information developed by contractors or service companies may be attached, this form must be signed by a responsible entity as described at 40 CFR 144.32. Note: operators closing Class V wells should use Form 7520-17.

NAME, ADDRESS, PHONE AND/OR EMAIL OF PERMITTEE: Enter the name and street address, city/town, state, and ZIP code of the permittee. Also provide an email address (if available) and/or a phone number.

PERMIT OR EPA ID NUMBER: Enter the well identification number or permit number assigned to the well by the EPA or the permitting authority.

API NUMBER: Enter the number assigned by the local jurisdiction (usually a State Oil and Gas Agency) using the American Petroleum Institute standard numbering system.

FULL WELL NAME: Enter the full name of the well or project.

Enter the **STATE** and **COUNTY** where the well is located. For States that do not have counties, use the name of that State's equivalent jurisdiction at a more local level.

WELL LOCATION: Fill in the complete township, range, and section to the nearest quarter-quarter section. A township is north or south of the baseline, and a range is east or west of the principal meridian (e.g., T12N, R34W). Also include the distance, in feet, from the nearest north or south line and nearest east or west line of the quarter-section. Also, enter the **latitude** and **longitude** of the well in decimal degrees, to five or six places if possible; be sure to include a negative sign for the longitude of a well in the Western Hemisphere and a negative sign for the latitude of a well in the Southern Hemisphere.

Enter the **WELL CLASS,** i.e., the class of injection well as defined in 40 CFR 144.6.

TIMING OF THE ACTION: Check ***Notice prior to work*** if the activity has not yet occurred (i.e., is planned). Check ***Report after work*** if the activity described has already occurred. As appropriate, include the date the activity is expected to start or the date the activity was completed. (Note this may not be available, e.g., for a plugging plan submitted with a permit application.)

TYPE OF ACTION: Check the appropriate box to describe the kind of activity being reported. Check ***Well Rework*** for work that was/will be performed on the well after it has already been in operation as an injection well. Check ***Plugging and Abandonment*** to report on plans for or descriptions of final closure/plugging after use as an injection well. Check ***Conversion to a Non-Injection Well*** if the well is to be converted to something other than an injection well.

Provide a **NARRATIVE DESCRIPTION** of the work planned to be performed, or that was performed. The narrative should include a description of the main procedures planned or that occurred during the work activity. A service company report, daily report, or similar document may be attached if it includes all the requested information and is clear and legible.

For well reworks, include the following information: The reason for the well rework; depths of activity; type of activity; changes to injection well configuration, well casing, or cement behind casing; any plug added to the well and its depth; any newly drilled interval and its depth; method(s) to demonstrate that the well has mechanical integrity (as applicable); and any deviations from the approved rework plan (as applicable).

For a well plugging plan, include the following information: Reason for the well plugging; number of plugs placed, and their depths; materials used as plugs (e.g., cast iron bridge plug, cement, cement retainer); method to set plugs; and wait-on-cement times, if any. Also provide one or more cost estimates from an independent firm in the business of plugging and abandoning wells to plug the well as described in the plan.

For well plugging affidavit, include the following information: Reason for the well plugging; number of plugs placed, and their depths; materials used as plugs (e.g., cast iron bridge plug, cement, cement retainer); method to set plugs; wait-on-cement times, if any; and any deviations from the approved plugging plan (if applicable).

For conversion to a non-injection well, include the following information: Depths of activity; type of activity; changes to injection well configuration, well casing, or cement behind casing; any plug added to the well and its depth; any newly drilled interval and its depth; depths of new perforations; and method(s) to demonstrate that the well has mechanical integrity (as applicable).

For all of the above activities, include a well sketch depicting the work, results of well tests/logging performed, service company tickets, and any other available information demonstrating how the work was/is to be performed. Also, specify whether depths are below ground surface, relative to Kelly bushing, etc.

CERTIFICATION: This form must be signed and dated by either: a responsible corporate officer for a corporation, by a general partner for a partnership, by the proprietor of a sole proprietorship, or by a principal executive or ranking elected official for a public agency.

PAPERWORK REDUCTION ACT NOTICE: The public reporting and recordkeeping burden for this collection of information is estimated to average between 6.0 and 7.9 hours per response, depending on the injection well class. Burden means the total time, effort, or financial resource expended by persons to generate, maintain, retain, or disclose or provide information to or for a Federal Agency. This includes the time needed to review instructions; develop, acquire, install, and utilize technology and systems for the purposes of collecting, validating, and verifying information, processing and maintaining information, and disclosing and providing information; adjust the existing ways to comply with any previously applicable instructions and requirements; train personnel to be able to respond to the collection of information; search data sources; complete and review the collection of information; and, transmit or otherwise disclose the information. An agency may not conduct or sponsor, and a person is not required to respond to, a collection of information unless it displays a currently valid OMB control number. Send comments on the Agency's need for this information, the accuracy of the provided burden estimates, and any suggested methods for minimizing respondent burden, including the use of automated collection techniques to Director, Collection Strategies Division, U.S. Environmental Protection Agency (2822), 1200 Pennsylvania Ave., NW., Washington, D.C. 20460. Include the OMB control number in any correspondence. Do not send the completed forms to this address.

Saved by: MNICHOLLS Printed: 7/25/2019 7:20 PM Sheet: HA-FIG-A-L(2)
\\HALEYALDRICH.COM\SHARE\PHX_COMMON\PROJECTS\FLORENCE COPPER\132473 FLORENCE GROUNDWATER PERMITTING\CAD\132473_000-OBSERVATION_WELL_CONSTRUCTION DIAGRAM.DWG

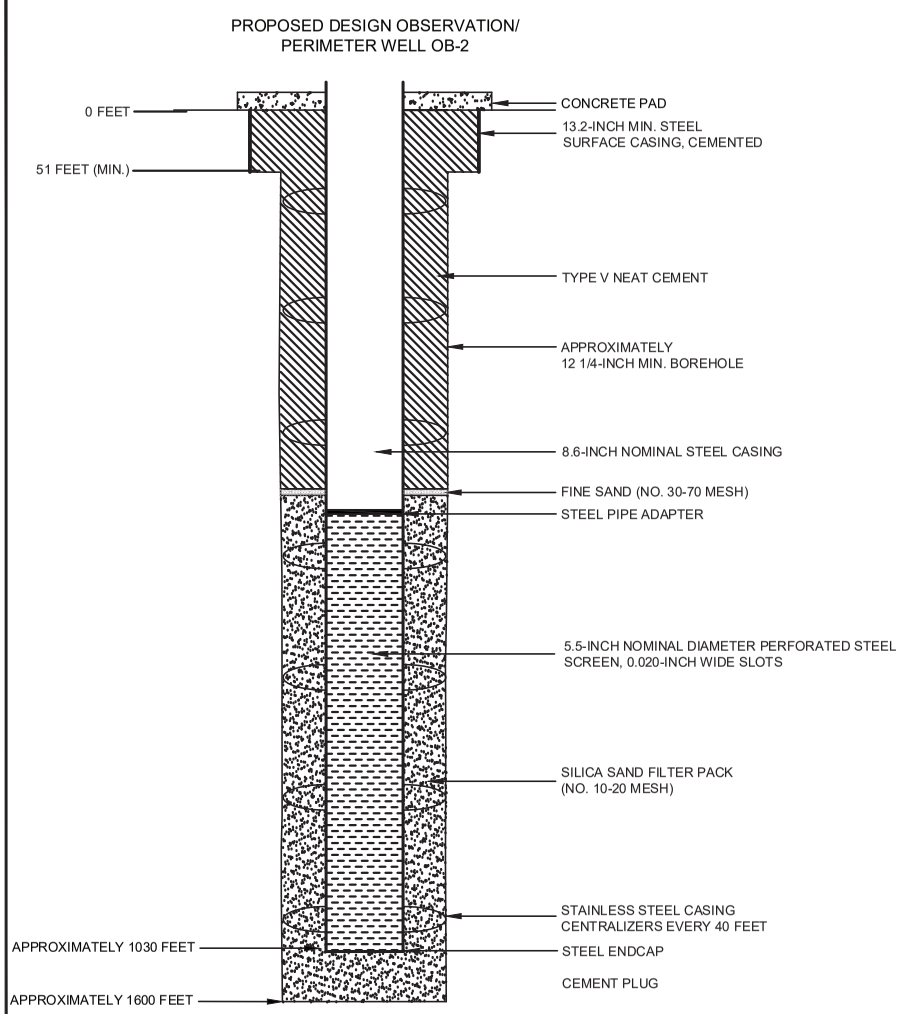

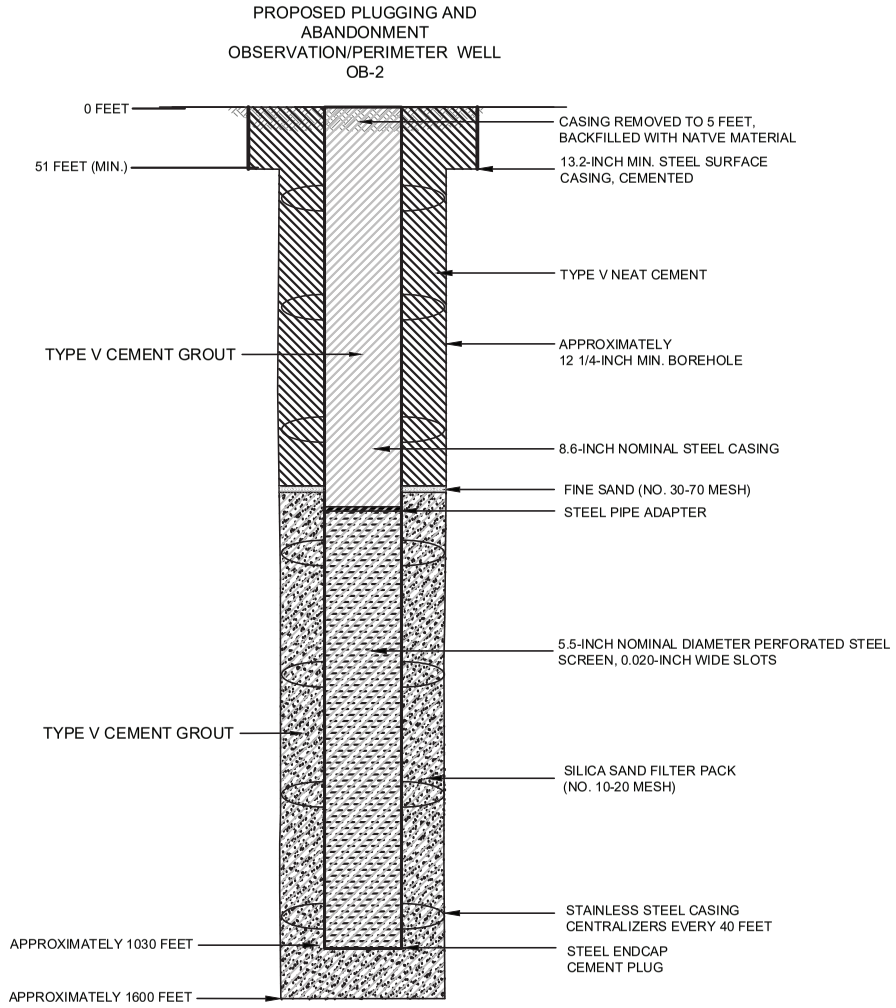

NOTES

1. WELL DESIGN DETAILS ARE BASED ON CORE HOLE AND WELL LOG RECORDS.

HALEY ALDRICH

FLORENCE COPPER, INC.
FLORENCE, ARIZONA

ABANDONMENT SCHEMATIC
OBSERVATION/PERIMETER WELL
OB-2 (OW-2, OB-2 CONOCO)

SEPTEMBER 2019
SCALE: AS SHOWN

FIGURE 1

OMB No. 2040-0042 Approval Expires 4/30/2022

United States Environmental Protection Agency

WELL REWORK RECORD, PLUGGING AND ABANDONMENT PLAN, OR PLUGGING AND ABANDONMENT AFFIDAVIT

Name and Address, Phone Number and/or Email of Permittee

Florence Copper Project
1575 W Hunt Hwy,
Florence, AZ 85132

Permit or EPA ID Number	API Number	Full Well Name
R9UIC-AZ3-FY11-1		OB2-1

State	County
Arizona	Pinal

Locate well in two directions from nearest lines of quarter section and drilling unit

Latitude 33.0503123

Longitude -111.4285464

Surface Location

NW **1/4 of** SE **1/4 of Section** 28 **Township** 4S **Range** 9E

_____ **ft. from (N/S)** _____ **Line of quarter section**

_____ **ft. from (E/W)** _____ **Line of quarter section.**

Well Class	Timing of Action (pick one)	Type of Action (pick one)
☐ Class I ☐ Class II ☑ Class III ☐ Class V	☑ Notice Prior to Work Date Expected to Commence March 2021 ☐ Report After Work Date Work Ended	☐ Well Rework ☑ Plugging and Abandonment ☐ Conversion to a Non-Injection Well

Provide a narrative description of the work planned to be performed, or that was performed. Use additional pages as necessary. See instructions.

A workover rig capable of performing the required abandonment operations at the required depths will be moved in and set up over the well. The well casing will be inspected to determine the depth to which the well remains open and if any obstructions are present in the casing; the presence and condition of any existing surface casing will also be documented. If necessary, the well casing will be cleaned out to the bottom of the deepest screen or perforation to enable placement of cement seals.

If surface casing is present, an attempt will be made to remove it. If removal of the surface casing is not feasible, it will be left in the hole and perforated as needed to allow an annular seal to be placed to a depth of at least 25 feet bgs. In areas of agricultural use, the surface casing will be cut at least 5 feet bgs and removed.

If the surface casing cannot be removed, it will be perforated from at least 20 feet below the bedrock-LBFU contact to at least 20 feet above the contact; from at least 20 feet below the base of the MFGU to at least 20 feet above the top of the MFGU; and from at least 25 feet bgs to 5 feet bgs.

A tremie pipe will be used to place Type V cement in the open well from the bottom of the well casing to the top of the well casing. Cement retainers, as described above, will be used to force cement grout into the annulus and behind perforated screen intervals, as necessary.

If the well casing has been obstructed, as much cement as possible will be placed from 100 feet below the LBFU-bedrock contact to the top of the casing.

The volume of Type V cement will be recorded and will not be less than the estimated volume of material required to fill each interval. All cement grout will consist of Type V cement, or equivalent approved in accordance with the UIC Permit.

Certification

I certify under the penalty of law that I have personally examined and am familiar with the information submitted in this document and all attachments and that, based on my inquiry of those individuals immediately responsible for obtaining the information, I believe that the information is true, accurate, and complete. I am aware that there are significant penalties for submitting false information, including the possibliity of fine and imprisonment. (Ref. 40 CFR § 144.32)

Name and Official Title *(Please type or print)*	Signature	Date Signed
Dan Johnson, VP - General Manager		10/3/2019

INSTRUCTIONS FOR FORM 7520-19

This form replaces forms 7520-12 and 7520-14. Use this form only when work is planned or has occurred that affects the well's construction or operation as an injection well, including work on the casing, tubing or packer (or for shallow Class V wells, the subsurface fluid emplacement network). Use one form per injection well. While reports or other information developed by contractors or service companies may be attached, this form must be signed by a responsible entity as described at 40 CFR 144.32. Note: operators closing Class V wells should use Form 7520-17.

NAME, ADDRESS, PHONE AND/OR EMAIL OF PERMITTEE: Enter the name and street address, city/town, state, and ZIP code of the permittee. Also provide an email address (if available) and/or a phone number.

PERMIT OR EPA ID NUMBER: Enter the well identification number or permit number assigned to the well by the EPA or the permitting authority.

API NUMBER: Enter the number assigned by the local jurisdiction (usually a State Oil and Gas Agency) using the American Petroleum Institute standard numbering system.

FULL WELL NAME: Enter the full name of the well or project.

Enter the **STATE** and **COUNTY** where the well is located. For States that do not have counties, use the name of that State's equivalent jurisdiction at a more local level.

WELL LOCATION: Fill in the complete township, range, and section to the nearest quarter-quarter section. A township is north or south of the baseline, and a range is east or west of the principal meridian (e.g., T12N, R34W). Also include the distance, in feet, from the nearest north or south line and nearest east or west line of the quarter-section. Also, enter the **latitude** and **longitude** of the well in decimal degrees, to five or six places if possible; be sure to include a negative sign for the longitude of a well in the Western Hemisphere and a negative sign for the latitude of a well in the Southern Hemisphere.

Enter the **WELL CLASS,** i.e., the class of injection well as defined in 40 CFR 144.6.

TIMING OF THE ACTION: Check ***Notice prior to work*** if the activity has not yet occurred (i.e., is planned). Check ***Report after work*** if the activity described has already occurred. As appropriate, include the date the activity is expected to start or the date the activity was completed. (Note this may not be available, e.g., for a plugging plan submitted with a permit application.)

TYPE OF ACTION: Check the appropriate box to describe the kind of activity being reported. Check ***Well Rework*** for work that was/will be performed on the well after it has already been in operation as an injection well. Check ***Plugging and Abandonment*** to report on plans for or descriptions of final closure/plugging after use as an injection well. Check ***Conversion to a Non-Injection Well*** if the well is to be converted to something other than an injection well.

Provide a **NARRATIVE DESCRIPTION** of the work planned to be performed, or that was performed. The narrative should include a description of the main procedures planned or that occurred during the work activity. A service company report, daily report, or similar document may be attached if it includes all the requested information and is clear and legible.

For well reworks, include the following information: The reason for the well rework; depths of activity; type of activity; changes to injection well configuration, well casing, or cement behind casing; any plug added to the well and its depth; any newly drilled interval and its depth; method(s) to demonstrate that the well has mechanical integrity (as applicable); and any deviations from the approved rework plan (as applicable).

For a well plugging plan, include the following information: Reason for the well plugging; number of plugs placed, and their depths; materials used as plugs (e.g., cast iron bridge plug, cement, cement retainer); method to set plugs; and wait-on-cement times, if any. Also provide one or more cost estimates from an independent firm in the business of plugging and abandoning wells to plug the well as described in the plan.

For well plugging affidavit, include the following information: Reason for the well plugging; number of plugs placed, and their depths; materials used as plugs (e.g., cast iron bridge plug, cement, cement retainer); method to set plugs; wait-on-cement times, if any; and any deviations from the approved plugging plan (if applicable).

For conversion to a non-injection well, include the following information: Depths of activity; type of activity; changes to injection well configuration, well casing, or cement behind casing; any plug added to the well and its depth; any newly drilled interval and its depth; depths of new perforations; and method(s) to demonstrate that the well has mechanical integrity (as applicable).

For all of the above activities, include a well sketch depicting the work, results of well tests/logging performed, service company tickets, and any other available information demonstrating how the work was/is to be performed. Also, specify whether depths are below ground surface, relative to Kelly bushing, etc.

CERTIFICATION: This form must be signed and dated by either: a responsible corporate officer for a corporation, by a general partner for a partnership, by the proprietor of a sole proprietorship, or by a principal executive or ranking elected official for a public agency.

PAPERWORK REDUCTION ACT NOTICE: The public reporting and recordkeeping burden for this collection of information is estimated to average between 6.0 and 7.9 hours per response, depending on the injection well class. Burden means the total time, effort, or financial resource expended by persons to generate, maintain, retain, or disclose or provide information to or for a Federal Agency. This includes the time needed to review instructions; develop, acquire, install, and utilize technology and systems for the purposes of collecting, validating, and verifying information, processing and maintaining information, and disclosing and providing information; adjust the existing ways to comply with any previously applicable instructions and requirements; train personnel to be able to respond to the collection of information; search data sources; complete and review the collection of information; and, transmit or otherwise disclose the information. An agency may not conduct or sponsor, and a person is not required to respond to, a collection of information unless it displays a currently valid OMB control number. Send comments on the Agency's need for this information, the accuracy of the provided burden estimates, and any suggested methods for minimizing respondent burden, including the use of automated collection techniques to Director, Collection Strategies Division, U.S. Environmental Protection Agency (2822), 1200 Pennsylvania Ave., NW., Washington, D.C. 20460. Include the OMB control number in any correspondence. Do not send the completed forms to this address.

Saved by: MNICHOLLS Printed: 7/25/2019 7:20 PM Sheet: HA-FIG-A-L(2)
\\HALEYALDRICH.COM\SHARE\PHX_COMMON\PROJECTS\FLORENCE COPPER\132473 FLORENCE GROUNDWATER PERMITTING\CAD\132473_000-OBSERVATION_WELL_CONSTRUCTION DIAGRAM.DWG

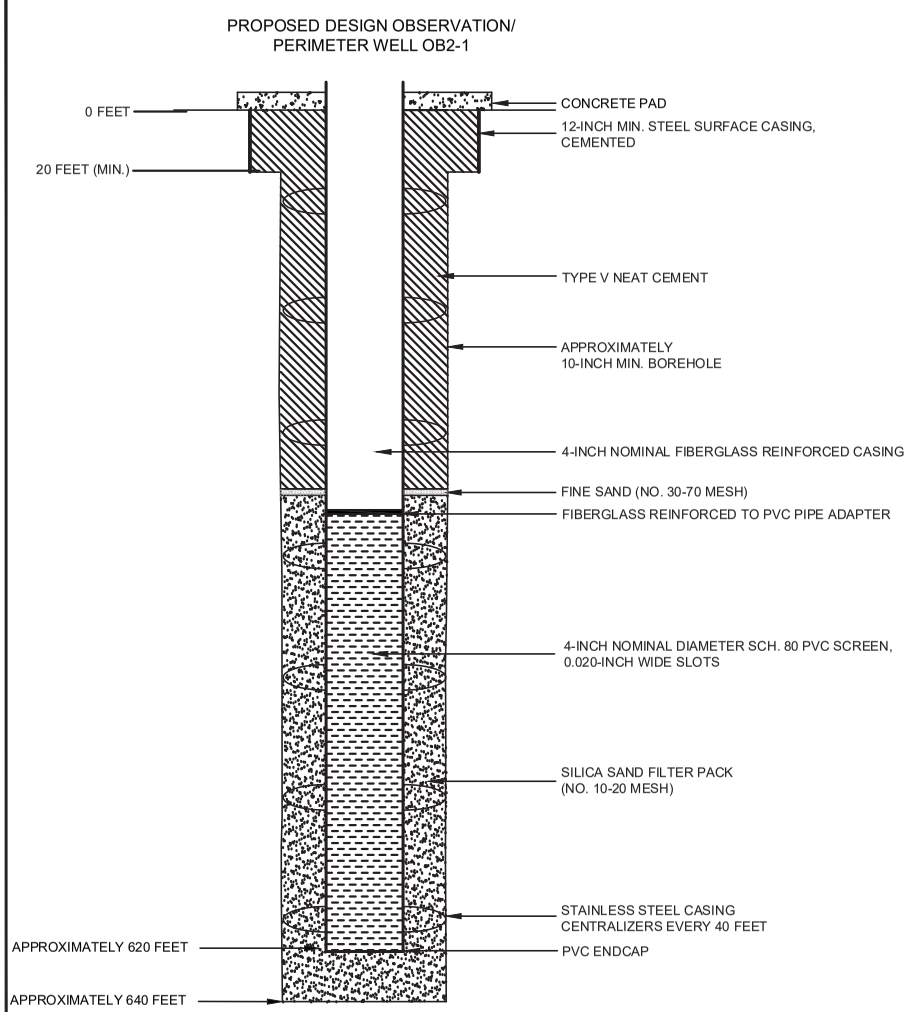

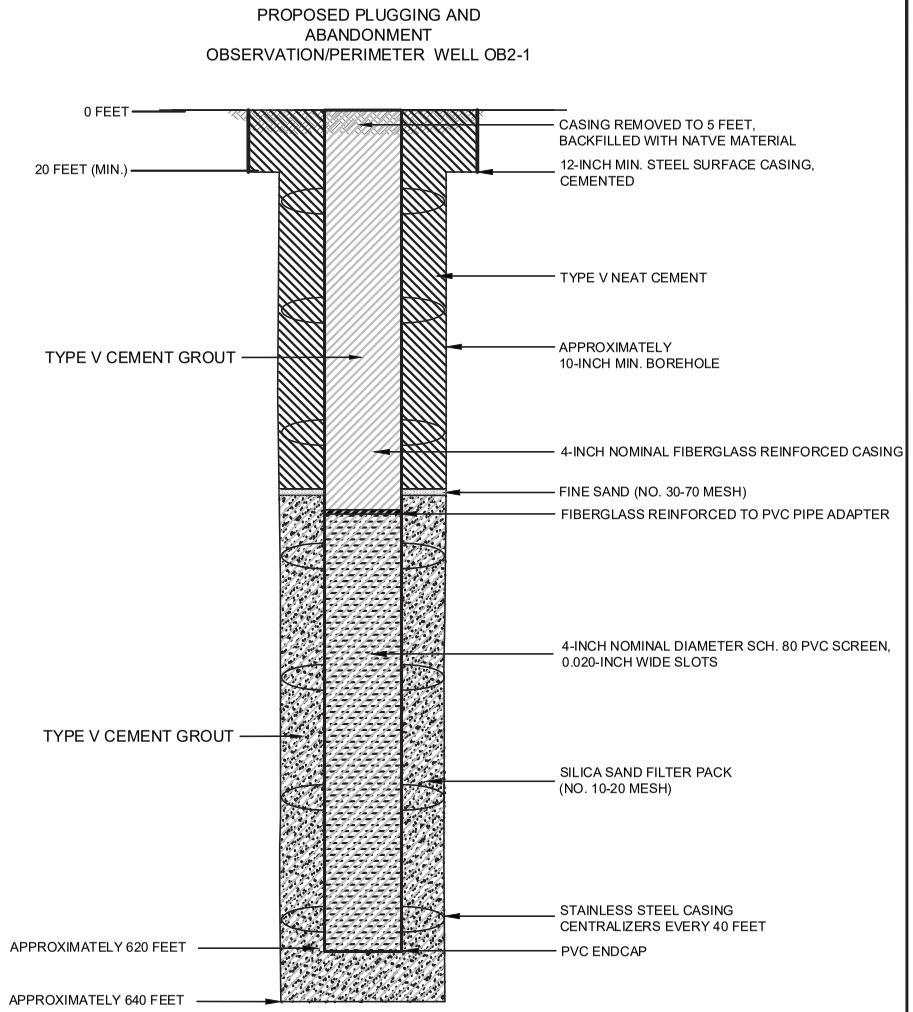

NOTES

1. WELL DESIGN DETAILS ARE BASED ON CORE HOLE AND WELL LOG RECORDS.

HALEY ALDRICH

FLORENCE COPPER, INC.
FLORENCE, ARIZONA

ABANDONMENT SCHEMATIC
OBSERVATION/PERIMETER WELL
OB2-1

SEPTEMBER 2019
SCALE: AS SHOWN

FIGURE 1

OMB No. 2040-0042 Approval Expires 4/30/2022

United States Environmental Protection Agency

WELL REWORK RECORD, PLUGGING AND ABANDONMENT PLAN, OR PLUGGING AND ABANDONMENT AFFIDAVIT

Name and Address, Phone Number and/or Email of Permittee

Florence Copper Project
1575 W Hunt Hwy,
Florence, AZ 85132

Permit or EPA ID Number	API Number	Full Well Name
R9UIC-AZ3-FY11-1		OB2-2

State	County
Arizona	Pinal

Locate well in two directions from nearest lines of quarter section and drilling unit

Surface Location

SW 1/4 of SE 1/4 of Section 28 Township 4S Range 9E

Latitude 33.04850193

Longitude -111.4275277

_____ ft. from (N/S) _____ Line of quarter section

_____ ft. from (E/W) _____ Line of quarter section.

Well Class	Timing of Action (pick one)	Type of Action (pick one)
☐ Class I ☐ Class II ☑ Class III ☐ Class V	☑ Notice Prior to Work Date Expected to Commence March 2021 ☐ Report After Work Date Work Ended	☐ Well Rework ☑ Plugging and Abandonment ☐ Conversion to a Non-Injection Well

Provide a narrative description of the work planned to be performed, or that was performed. Use additional pages as necessary. See instructions.

A workover rig capable of performing the required abandonment operations at the required depths will be moved in and set up over the well. The well casing will be inspected to determine the depth to which the well remains open and if any obstructions are present in the casing; the presence and condition of any existing surface casing will also be documented. If necessary, the well casing will be cleaned out to the bottom of the deepest screen or perforation to enable placement of cement seals.

If surface casing is present, an attempt will be made to remove it. If removal of the surface casing is not feasible, it will be left in the hole and perforated as needed to allow an annular seal to be placed to a depth of at least 25 feet bgs. In areas of agricultural use, the surface casing will be cut at least 5 feet bgs and removed.

If the surface casing cannot be removed, it will be perforated from at least 20 feet below the bedrock-LBFU contact to at least 20 feet above the contact; from at least 20 feet below the base of the MFGU to at least 20 feet above the top of the MFGU; and from at least 25 feet bgs to 5 feet bgs.

A tremie pipe will be used to place Type V cement in the open well from the bottom of the well casing to the top of the well casing. Cement retainers, as described above, will be used to force cement grout into the annulus and behind perforated screen intervals, as necessary.

If the well casing has been obstructed, as much cement as possible will be placed from 100 feet below the LBFU-bedrock contact to the top of the casing.

The volume of Type V cement will be recorded and will not be less than the estimated volume of material required to fill each interval. All cement grout will consist of Type V cement, or equivalent approved in accordance with the UIC Permit.

Certification

I certify under the penalty of law that I have personally examined and am familiar with the information submitted in this document and all attachments and that, based on my inquiry of those individuals immediately responsible for obtaining the information, I believe that the information is true, accurate, and complete. I am aware that there are significant penalties for submitting false information, including the possibliity of fine and imprisonment. (Ref. 40 CFR § 144.32)

Name and Official Title *(Please type or print)*	Signature	Date Signed
Dan Johnson, VP - General Manager		10/3/2019

INSTRUCTIONS FOR FORM 7520-19

This form replaces forms 7520-12 and 7520-14. Use this form only when work is planned or has occurred that affects the well's construction or operation as an injection well, including work on the casing, tubing or packer (or for shallow Class V wells, the subsurface fluid emplacement network). Use one form per injection well. While reports or other information developed by contractors or service companies may be attached, this form must be signed by a responsible entity as described at 40 CFR 144.32. Note: operators closing Class V wells should use Form 7520-17.

NAME, ADDRESS, PHONE AND/OR EMAIL OF PERMITTEE: Enter the name and street address, city/town, state, and ZIP code of the permittee. Also provide an email address (if available) and/or a phone number.

PERMIT OR EPA ID NUMBER: Enter the well identification number or permit number assigned to the well by the EPA or the permitting authority.

API NUMBER: Enter the number assigned by the local jurisdiction (usually a State Oil and Gas Agency) using the American Petroleum Institute standard numbering system.

FULL WELL NAME: Enter the full name of the well or project.

Enter the **STATE** and **COUNTY** where the well is located. For States that do not have counties, use the name of that State's equivalent jurisdiction at a more local level.

WELL LOCATION: Fill in the complete township, range, and section to the nearest quarter-quarter section. A township is north or south of the baseline, and a range is east or west of the principal meridian (e.g., T12N, R34W). Also include the distance, in feet, from the nearest north or south line and nearest east or west line of the quarter-section. Also, enter the **latitude** and **longitude** of the well in decimal degrees, to five or six places if possible; be sure to include a negative sign for the longitude of a well in the Western Hemisphere and a negative sign for the latitude of a well in the Southern Hemisphere.

Enter the **WELL CLASS,** i.e., the class of injection well as defined in 40 CFR 144.6.

TIMING OF THE ACTION: Check ***Notice prior to work*** if the activity has not yet occurred (i.e., is planned). Check ***Report after work*** if the activity described has already occurred. As appropriate, include the date the activity is expected to start or the date the activity was completed. (Note this may not be available, e.g., for a plugging plan submitted with a permit application.)

TYPE OF ACTION: Check the appropriate box to describe the kind of activity being reported. Check ***Well Rework*** for work that was/will be performed on the well after it has already been in operation as an injection well. Check ***Plugging and Abandonment*** to report on plans for or descriptions of final closure/plugging after use as an injection well. Check ***Conversion to a Non-Injection Well*** if the well is to be converted to something other than an injection well.

Provide a **NARRATIVE DESCRIPTION** of the work planned to be performed, or that was performed. The narrative should include a description of the main procedures planned or that occurred during the work activity. A service company report, daily report, or similar document may be attached if it includes all the requested information and is clear and legible.

For well reworks, include the following information: The reason for the well rework; depths of activity; type of activity; changes to injection well configuration, well casing, or cement behind casing; any plug added to the well and its depth; any newly drilled interval and its depth; method(s) to demonstrate that the well has mechanical integrity (as applicable); and any deviations from the approved rework plan (as applicable).

For a well plugging plan, include the following information: Reason for the well plugging; number of plugs placed, and their depths; materials used as plugs (e.g., cast iron bridge plug, cement, cement retainer); method to set plugs; and wait-on-cement times, if any. Also provide one or more cost estimates from an independent firm in the business of plugging and abandoning wells to plug the well as described in the plan.

For well plugging affidavit, include the following information: Reason for the well plugging; number of plugs placed, and their depths; materials used as plugs (e.g., cast iron bridge plug, cement, cement retainer); method to set plugs; wait-on-cement times, if any; and any deviations from the approved plugging plan (if applicable).

For conversion to a non-injection well, include the following information: Depths of activity; type of activity; changes to injection well configuration, well casing, or cement behind casing; any plug added to the well and its depth; any newly drilled interval and its depth; depths of new perforations; and method(s) to demonstrate that the well has mechanical integrity (as applicable).

For all of the above activities, include a well sketch depicting the work, results of well tests/logging performed, service company tickets, and any other available information demonstrating how the work was/is to be performed. Also, specify whether depths are below ground surface, relative to Kelly bushing, etc.

CERTIFICATION: This form must be signed and dated by either: a responsible corporate officer for a corporation, by a general partner for a partnership, by the proprietor of a sole proprietorship, or by a principal executive or ranking elected official for a public agency.

PAPERWORK REDUCTION ACT NOTICE: The public reporting and recordkeeping burden for this collection of information is estimated to average between 6.0 and 7.9 hours per response, depending on the injection well class. Burden means the total time, effort, or financial resource expended by persons to generate, maintain, retain, or disclose or provide information to or for a Federal Agency. This includes the time needed to review instructions; develop, acquire, install, and utilize technology and systems for the purposes of collecting, validating, and verifying information, processing and maintaining information, and disclosing and providing information; adjust the existing ways to comply with any previously applicable instructions and requirements; train personnel to be able to respond to the collection of information; search data sources; complete and review the collection of information; and, transmit or otherwise disclose the information. An agency may not conduct or sponsor, and a person is not required to respond to, a collection of information unless it displays a currently valid OMB control number. Send comments on the Agency's need for this information, the accuracy of the provided burden estimates, and any suggested methods for minimizing respondent burden, including the use of automated collection techniques to Director, Collection Strategies Division, U.S. Environmental Protection Agency (2822), 1200 Pennsylvania Ave., NW., Washington, D.C. 20460. Include the OMB control number in any correspondence. Do not send the completed forms to this address.

Saved by: MNICHOLLS Printed: 7/25/2019 7:20 PM Sheet: HA-FIG-A-L(2)
\\HALEYALDRICH.COM\SHARE\PHX_COMMON\PROJECTS\FLORENCE COPPER\132473 FLORENCE GROUNDWATER PERMITTING\CAD\132473_000-OBSERVATION_WELL_CONSTRUCTION DIAGRAM.DWG

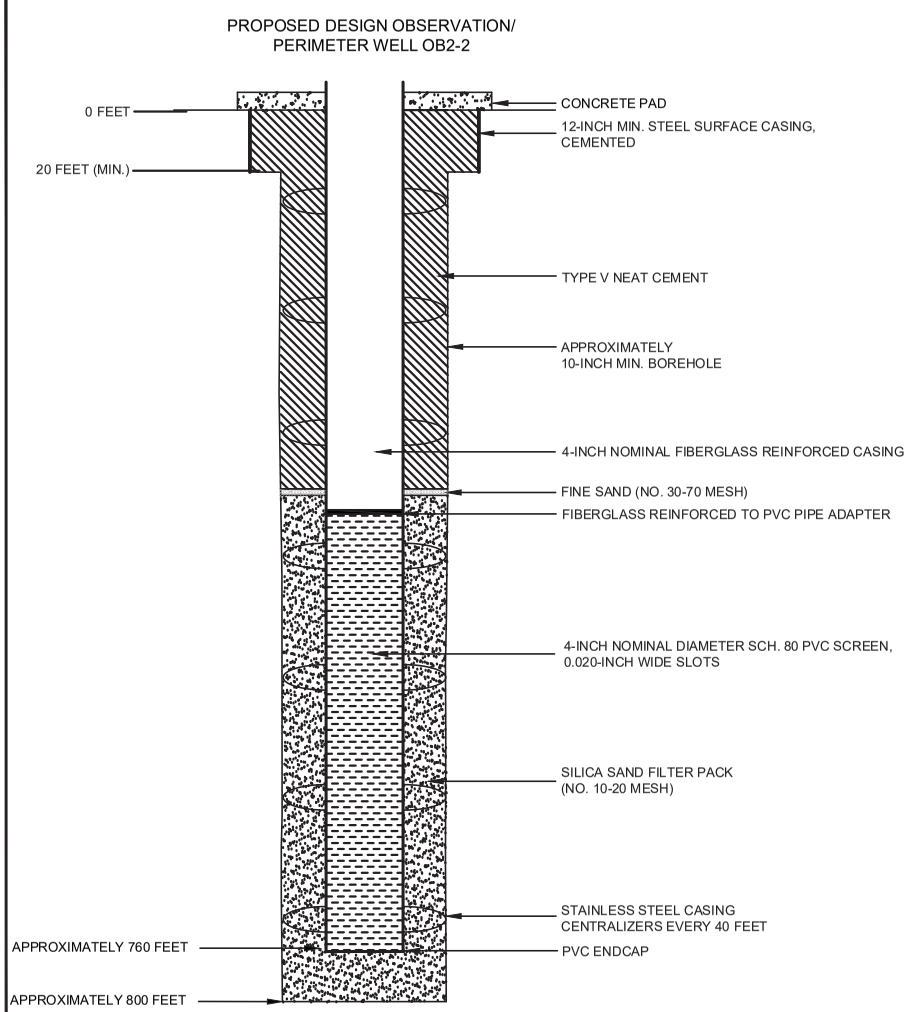

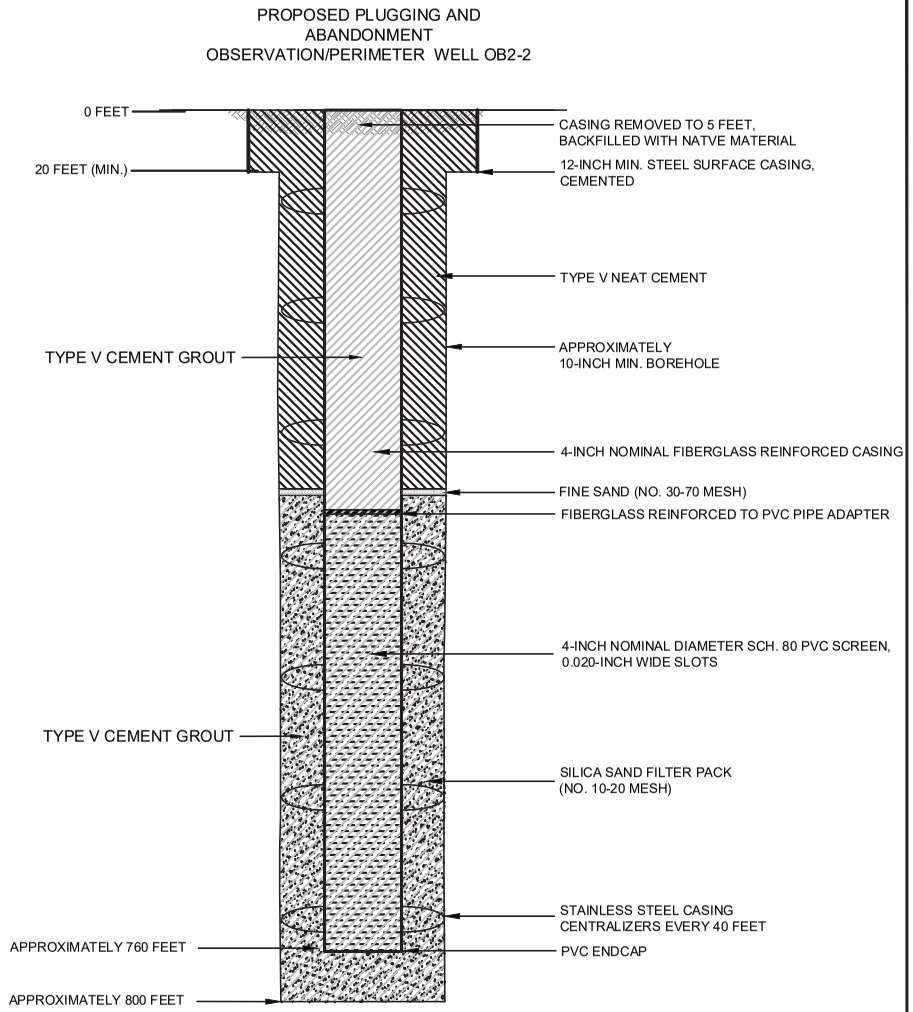

NOTES

1. WELL DESIGN DETAILS ARE BASED ON CORE HOLE AND WELL LOG RECORDS.

HALEY ALDRICH

FLORENCE COPPER, INC.
FLORENCE, ARIZONA

ABANDONMENT SCHEMATIC
OBSERVATION/PERIMETER WELL
OB2-2

SEPTEMBER 2019
SCALE: AS SHOWN

FIGURE 1

OMB No. 2040-0042 Approval Expires 4/30/2022

United States Environmental Protection Agency

WELL REWORK RECORD, PLUGGING AND ABANDONMENT PLAN, OR PLUGGING AND ABANDONMENT AFFIDAVIT

Name and Address, Phone Number and/or Email of Permittee

Florence Copper Project
1575 W Hunt Hwy,
Florence, AZ 85132

Permit or EPA ID Number	API Number	Full Well Name
R9UIC-AZ3-FY11-1		OB-3

State	County
Arizona	Pinal

Locate well in two directions from nearest lines of quarter section and drilling unit

Surface Location

SE 1/4 of SW 1/4 of Section 28 Township 4S Range 9E

Latitude 33.04905308

Longitude -111.4319079

ft. from (N/S) Line of quarter section

ft. from (E/W) Line of quarter section.

Well Class	Timing of Action (pick one)	Type of Action (pick one)
☐ Class I ☐ Class II ☑ Class III ☐ Class V	☑ Notice Prior to Work Date Expected to Commence March 2021 ☐ Report After Work Date Work Ended	☐ Well Rework ☑ Plugging and Abandonment ☐ Conversion to a Non-Injection Well

Provide a narrative description of the work planned to be performed, or that was performed. Use additional pages as necessary. See instructions.

A workover rig capable of performing the required abandonment operations at the required depths will be moved in and set up over the well. The well casing will be inspected to determine the depth to which the well remains open and if any obstructions are present in the casing; the presence and condition of any existing surface casing will also be documented. If necessary, the well casing will be cleaned out to the bottom of the deepest screen or perforation to enable placement of cement seals.

If surface casing is present, an attempt will be made to remove it. If removal of the surface casing is not feasible, it will be left in the hole and perforated as needed to allow an annular seal to be placed to a depth of at least 25 feet bgs. In areas of agricultural use, the surface casing will be cut at least 5 feet bgs and removed.

If the surface casing cannot be removed, it will be perforated from at least 20 feet below the bedrock-LBFU contact to at least 20 feet above the contact; from at least 20 feet below the base of the MFGU to at least 20 feet above the top of the MFGU; and from at least 25 feet bgs to 5 feet bgs.

A tremie pipe will be used to place Type V cement in the open well from the bottom of the well casing to the top of the well casing. Cement retainers, as described above, will be used to force cement grout into the annulus and behind perforated screen intervals, as necessary.

If the well casing has been obstructed, as much cement as possible will be placed from 100 feet below the LBFU-bedrock contact to the top of the casing.

The volume of Type V cement will be recorded and will not be less than the estimated volume of material required to fill each interval. All cement grout will consist of Type V cement, or equivalent approved in accordance with the UIC Permit.

Certification

I certify under the penalty of law that I have personally examined and am familiar with the information submitted in this document and all attachments and that, based on my inquiry of those individuals immediately responsible for obtaining the information, I believe that the information is true, accurate, and complete. I am aware that there are significant penalties for submitting false information, including the possibliity of fine and imprisonment. (Ref. 40 CFR § 144.32)

Name and Official Title *(Please type or print)*	Signature	Date Signed
Dan Johnson, VP - General Manager		10/3/2019

INSTRUCTIONS FOR FORM 7520-19

This form replaces forms 7520-12 and 7520-14. Use this form only when work is planned or has occurred that affects the well's construction or operation as an injection well, including work on the casing, tubing or packer (or for shallow Class V wells, the subsurface fluid emplacement network). Use one form per injection well. While reports or other information developed by contractors or service companies may be attached, this form must be signed by a responsible entity as described at 40 CFR 144.32. Note: operators closing Class V wells should use Form 7520-17.

NAME, ADDRESS, PHONE AND/OR EMAIL OF PERMITTEE: Enter the name and street address, city/town, state, and ZIP code of the permittee. Also provide an email address (if available) and/or a phone number.

PERMIT OR EPA ID NUMBER: Enter the well identification number or permit number assigned to the well by the EPA or the permitting authority.

API NUMBER: Enter the number assigned by the local jurisdiction (usually a State Oil and Gas Agency) using the American Petroleum Institute standard numbering system.

FULL WELL NAME: Enter the full name of the well or project.

Enter the **STATE** and **COUNTY** where the well is located. For States that do not have counties, use the name of that State's equivalent jurisdiction at a more local level.

WELL LOCATION: Fill in the complete township, range, and section to the nearest quarter-quarter section. A township is north or south of the baseline, and a range is east or west of the principal meridian (e.g., T12N, R34W). Also include the distance, in feet, from the nearest north or south line and nearest east or west line of the quarter-section. Also, enter the **latitude** and **longitude** of the well in decimal degrees, to five or six places if possible; be sure to include a negative sign for the longitude of a well in the Western Hemisphere and a negative sign for the latitude of a well in the Southern Hemisphere.

Enter the **WELL CLASS,** i.e., the class of injection well as defined in 40 CFR 144.6.

TIMING OF THE ACTION: Check ***Notice prior to work*** if the activity has not yet occurred (i.e., is planned). Check ***Report after work*** if the activity described has already occurred. As appropriate, include the date the activity is expected to start or the date the activity was completed. (Note this may not be available, e.g., for a plugging plan submitted with a permit application.)

TYPE OF ACTION: Check the appropriate box to describe the kind of activity being reported. Check ***Well Rework*** for work that was/will be performed on the well after it has already been in operation as an injection well. Check ***Plugging and Abandonment*** to report on plans for or descriptions of final closure/plugging after use as an injection well. Check ***Conversion to a Non-Injection Well*** if the well is to be converted to something other than an injection well.

Provide a **NARRATIVE DESCRIPTION** of the work planned to be performed, or that was performed. The narrative should include a description of the main procedures planned or that occurred during the work activity. A service company report, daily report, or similar document may be attached if it includes all the requested information and is clear and legible.

For well reworks, include the following information: The reason for the well rework; depths of activity; type of activity; changes to injection well configuration, well casing, or cement behind casing; any plug added to the well and its depth; any newly drilled interval and its depth; method(s) to demonstrate that the well has mechanical integrity (as applicable); and any deviations from the approved rework plan (as applicable).

For a well plugging plan, include the following information: Reason for the well plugging; number of plugs placed, and their depths; materials used as plugs (e.g., cast iron bridge plug, cement, cement retainer); method to set plugs; and wait-on-cement times, if any. Also provide one or more cost estimates from an independent firm in the business of plugging and abandoning wells to plug the well as described in the plan.

For well plugging affidavit, include the following information: Reason for the well plugging; number of plugs placed, and their depths; materials used as plugs (e.g., cast iron bridge plug, cement, cement retainer); method to set plugs; wait-on-cement times, if any; and any deviations from the approved plugging plan (if applicable).

For conversion to a non-injection well, include the following information: Depths of activity; type of activity; changes to injection well configuration, well casing, or cement behind casing; any plug added to the well and its depth; any newly drilled interval and its depth; depths of new perforations; and method(s) to demonstrate that the well has mechanical integrity (as applicable).

For all of the above activities, include a well sketch depicting the work, results of well tests/logging performed, service company tickets, and any other available information demonstrating how the work was/is to be performed. Also, specify whether depths are below ground surface, relative to Kelly bushing, etc.

CERTIFICATION: This form must be signed and dated by either: a responsible corporate officer for a corporation, by a general partner for a partnership, by the proprietor of a sole proprietorship, or by a principal executive or ranking elected official for a public agency.

PAPERWORK REDUCTION ACT NOTICE: The public reporting and recordkeeping burden for this collection of information is estimated to average between 6.0 and 7.9 hours per response, depending on the injection well class. Burden means the total time, effort, or financial resource expended by persons to generate, maintain, retain, or disclose or provide information to or for a Federal Agency. This includes the time needed to review instructions; develop, acquire, install, and utilize technology and systems for the purposes of collecting, validating, and verifying information, processing and maintaining information, and disclosing and providing information; adjust the existing ways to comply with any previously applicable instructions and requirements; train personnel to be able to respond to the collection of information; search data sources; complete and review the collection of information; and, transmit or otherwise disclose the information. An agency may not conduct or sponsor, and a person is not required to respond to, a collection of information unless it displays a currently valid OMB control number. Send comments on the Agency's need for this information, the accuracy of the provided burden estimates, and any suggested methods for minimizing respondent burden, including the use of automated collection techniques to Director, Collection Strategies Division, U.S. Environmental Protection Agency (2822), 1200 Pennsylvania Ave., NW., Washington, D.C. 20460. Include the OMB control number in any correspondence. Do not send the completed forms to this address.

Saved by: MNICHOLLS Printed: 7/25/2019 7:20 PM Sheet: HA-FIG-A-L(2)
\\HALEYALDRICH.COM\SHARE\PHX_COMMON\PROJECTS\FLORENCE COPPER\132473 FLORENCE GROUNDWATER PERMITTING\CAD\132473_000-OBSERVATION_WELL_CONSTRUCTION DIAGRAM.DWG

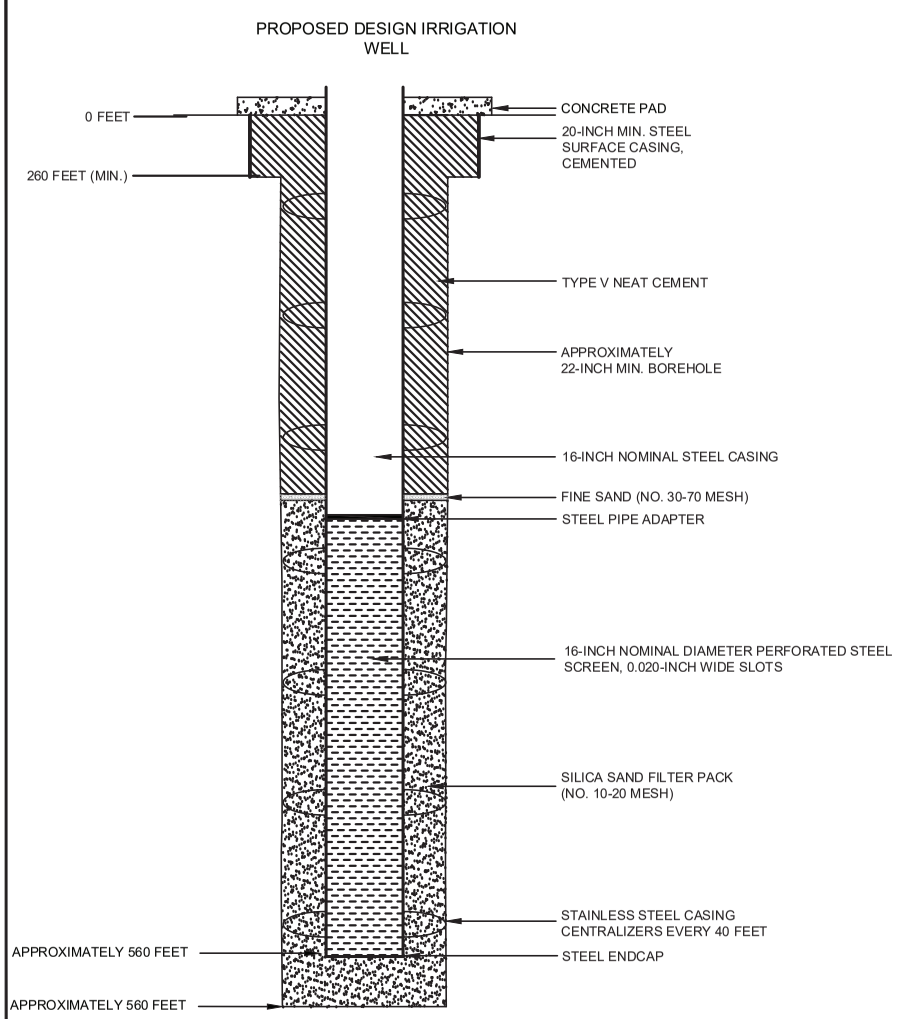

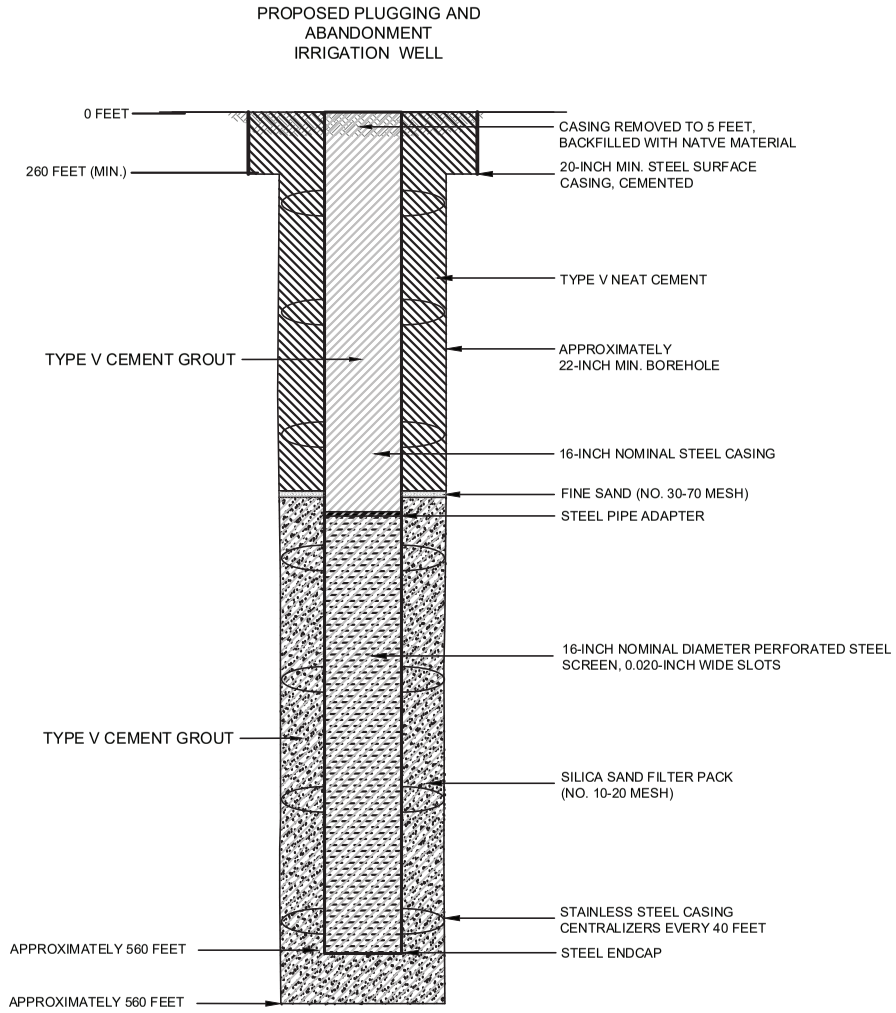

NOTES

1. WELL DESIGN DETAILS ARE BASED ON CORE HOLE AND WELL LOG RECORDS.

HALEY ALDRICH

FLORENCE COPPER, INC.
FLORENCE, ARIZONA

ABANDONMENT SCHEMATIC
IRRIGATION WELL OB-3
(McFarland 1, OW-3, Mf H20, MFZ)

SEPTEMBER 2019
SCALE: AS SHOWN

FIGURE 1

OMB No. 2040-0042 Approval Expires 4/30/2022

United States Environmental Protection Agency

WELL REWORK RECORD, PLUGGING AND ABANDONMENT PLAN, OR PLUGGING AND ABANDONMENT AFFIDAVIT

Name and Address, Phone Number and/or Email of Permittee

Florence Copper Project
1575 W Hunt Hwy,
Florence, AZ 85132

Permit or EPA ID Number	API Number	Full Well Name
R9UIC-AZ3-FY11-1		OB-4

State	County
Arizona	Pinal

Locate well in two directions from nearest lines of quarter section and drilling unit

Latitude 33.04765116

Longitude -111.4250616

Surface Location

SE **1/4 of** SE **1/4 of Section** 28 **Township** 4S **Range** 9E

_____ **ft. from (N/S)** _____ **Line of quarter section**

_____ **ft. from (E/W)** _____ **Line of quarter section.**

Well Class	Timing of Action (pick one)	Type of Action (pick one)
☐ Class I ☐ Class II ☑ Class III ☐ Class V	☑ Notice Prior to Work Date Expected to Commence March 2021 ☐ Report After Work Date Work Ended	☐ Well Rework ☑ Plugging and Abandonment ☐ Conversion to a Non-Injection Well

Provide a narrative description of the work planned to be performed, or that was performed. Use additional pages as necessary. See instructions.

A workover rig capable of performing the required abandonment operations at the required depths will be moved in and set up over the well. The well casing will be inspected to determine the depth to which the well remains open and if any obstructions are present in the casing; the presence and condition of any existing surface casing will also be documented. If necessary, the well casing will be cleaned out to the bottom of the deepest screen or perforation to enable placement of cement seals.

If surface casing is present, an attempt will be made to remove it. If removal of the surface casing is not feasible, it will be left in the hole and perforated as needed to allow an annular seal to be placed to a depth of at least 25 feet bgs. In areas of agricultural use, the surface casing will be cut at least 5 feet bgs and removed.

If the surface casing cannot be removed, it will be perforated from at least 20 feet below the bedrock-LBFU contact to at least 20 feet above the contact; from at least 20 feet below the base of the MFGU to at least 20 feet above the top of the MFGU; and from at least 25 feet bgs to 5 feet bgs.

A tremie pipe will be used to place Type V cement in the open well from the bottom of the well casing to the top of the well casing. Cement retainers, as described above, will be used to force cement grout into the annulus and behind perforated screen intervals, as necessary.

If the well casing has been obstructed, as much cement as possible will be placed from 100 feet below the LBFU-bedrock contact to the top of the casing.

The volume of Type V cement will be recorded and will not be less than the estimated volume of material required to fill each interval. All cement grout will consist of Type V cement, or equivalent approved in accordance with the UIC Permit.

Certification

I certify under the penalty of law that I have personally examined and am familiar with the information submitted in this document and all attachments and that, based on my inquiry of those individuals immediately responsible for obtaining the information, I believe that the information is true, accurate, and complete. I am aware that there are significant penalties for submitting false information, including the possibliity of fine and imprisonment. (Ref. 40 CFR § 144.32)

Name and Official Title *(Please type or print)*	Signature	Date Signed
Dan Johnson, VP - General Manager		10/3/2019

INSTRUCTIONS FOR FORM 7520-19

This form replaces forms 7520-12 and 7520-14. Use this form only when work is planned or has occurred that affects the well's construction or operation as an injection well, including work on the casing, tubing or packer (or for shallow Class V wells, the subsurface fluid emplacement network). Use one form per injection well. While reports or other information developed by contractors or service companies may be attached, this form must be signed by a responsible entity as described at 40 CFR 144.32. Note: operators closing Class V wells should use Form 7520-17.

NAME, ADDRESS, PHONE AND/OR EMAIL OF PERMITTEE: Enter the name and street address, city/town, state, and ZIP code of the permittee. Also provide an email address (if available) and/or a phone number.

PERMIT OR EPA ID NUMBER: Enter the well identification number or permit number assigned to the well by the EPA or the permitting authority.

API NUMBER: Enter the number assigned by the local jurisdiction (usually a State Oil and Gas Agency) using the American Petroleum Institute standard numbering system.

FULL WELL NAME: Enter the full name of the well or project.

Enter the **STATE** and **COUNTY** where the well is located. For States that do not have counties, use the name of that State's equivalent jurisdiction at a more local level.

WELL LOCATION: Fill in the complete township, range, and section to the nearest quarter-quarter section. A township is north or south of the baseline, and a range is east or west of the principal meridian (e.g., T12N, R34W). Also include the distance, in feet, from the nearest north or south line and nearest east or west line of the quarter-section. Also, enter the **latitude** and **longitude** of the well in decimal degrees, to five or six places if possible; be sure to include a negative sign for the longitude of a well in the Western Hemisphere and a negative sign for the latitude of a well in the Southern Hemisphere.

Enter the **WELL CLASS,** i.e., the class of injection well as defined in 40 CFR 144.6.

TIMING OF THE ACTION: Check ***Notice prior to work*** if the activity has not yet occurred (i.e., is planned). Check ***Report after work*** if the activity described has already occurred. As appropriate, include the date the activity is expected to start or the date the activity was completed. (Note this may not be available, e.g., for a plugging plan submitted with a permit application.)

TYPE OF ACTION: Check the appropriate box to describe the kind of activity being reported. Check ***Well Rework*** for work that was/will be performed on the well after it has already been in operation as an injection well. Check ***Plugging and Abandonment*** to report on plans for or descriptions of final closure/plugging after use as an injection well. Check ***Conversion to a Non-Injection Well*** if the well is to be converted to something other than an injection well.

Provide a **NARRATIVE DESCRIPTION** of the work planned to be performed, or that was performed. The narrative should include a description of the main procedures planned or that occurred during the work activity. A service company report, daily report, or similar document may be attached if it includes all the requested information and is clear and legible.

For well reworks, include the following information: The reason for the well rework; depths of activity; type of activity; changes to injection well configuration, well casing, or cement behind casing; any plug added to the well and its depth; any newly drilled interval and its depth; method(s) to demonstrate that the well has mechanical integrity (as applicable); and any deviations from the approved rework plan (as applicable).

For a well plugging plan, include the following information: Reason for the well plugging; number of plugs placed, and their depths; materials used as plugs (e.g., cast iron bridge plug, cement, cement retainer); method to set plugs; and wait-on-cement times, if any. Also provide one or more cost estimates from an independent firm in the business of plugging and abandoning wells to plug the well as described in the plan.

For well plugging affidavit, include the following information: Reason for the well plugging; number of plugs placed, and their depths; materials used as plugs (e.g., cast iron bridge plug, cement, cement retainer); method to set plugs; wait-on-cement times, if any; and any deviations from the approved plugging plan (if applicable).

For conversion to a non-injection well, include the following information: Depths of activity; type of activity; changes to injection well configuration, well casing, or cement behind casing; any plug added to the well and its depth; any newly drilled interval and its depth; depths of new perforations; and method(s) to demonstrate that the well has mechanical integrity (as applicable).

For all of the above activities, include a well sketch depicting the work, results of well tests/logging performed, service company tickets, and any other available information demonstrating how the work was/is to be performed. Also, specify whether depths are below ground surface, relative to Kelly bushing, etc.

CERTIFICATION: This form must be signed and dated by either: a responsible corporate officer for a corporation, by a general partner for a partnership, by the proprietor of a sole proprietorship, or by a principal executive or ranking elected official for a public agency.

PAPERWORK REDUCTION ACT NOTICE: The public reporting and recordkeeping burden for this collection of information is estimated to average between 6.0 and 7.9 hours per response, depending on the injection well class. Burden means the total time, effort, or financial resource expended by persons to generate, maintain, retain, or disclose or provide information to or for a Federal Agency. This includes the time needed to review instructions; develop, acquire, install, and utilize technology and systems for the purposes of collecting, validating, and verifying information, processing and maintaining information, and disclosing and providing information; adjust the existing ways to comply with any previously applicable instructions and requirements; train personnel to be able to respond to the collection of information; search data sources; complete and review the collection of information; and, transmit or otherwise disclose the information. An agency may not conduct or sponsor, and a person is not required to respond to, a collection of information unless it displays a currently valid OMB control number. Send comments on the Agency's need for this information, the accuracy of the provided burden estimates, and any suggested methods for minimizing respondent burden, including the use of automated collection techniques to Director, Collection Strategies Division, U.S. Environmental Protection Agency (2822), 1200 Pennsylvania Ave., NW., Washington, D.C. 20460. Include the OMB control number in any correspondence. Do not send the completed forms to this address.

PROPOSED DESIGN OBSERVATION/
PERIMETER WELL OB-4

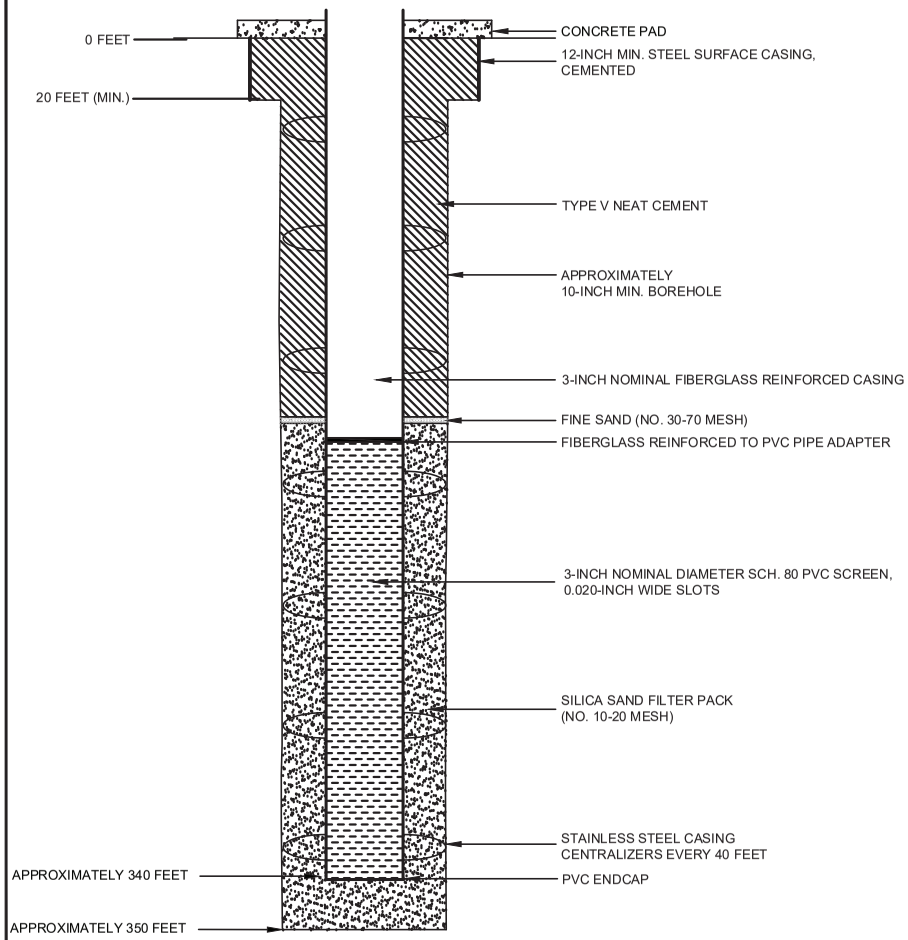

PROPOSED PLUGGING AND
ABANDONMENT
OBSERVATION/PERIMETER WELL OB-4

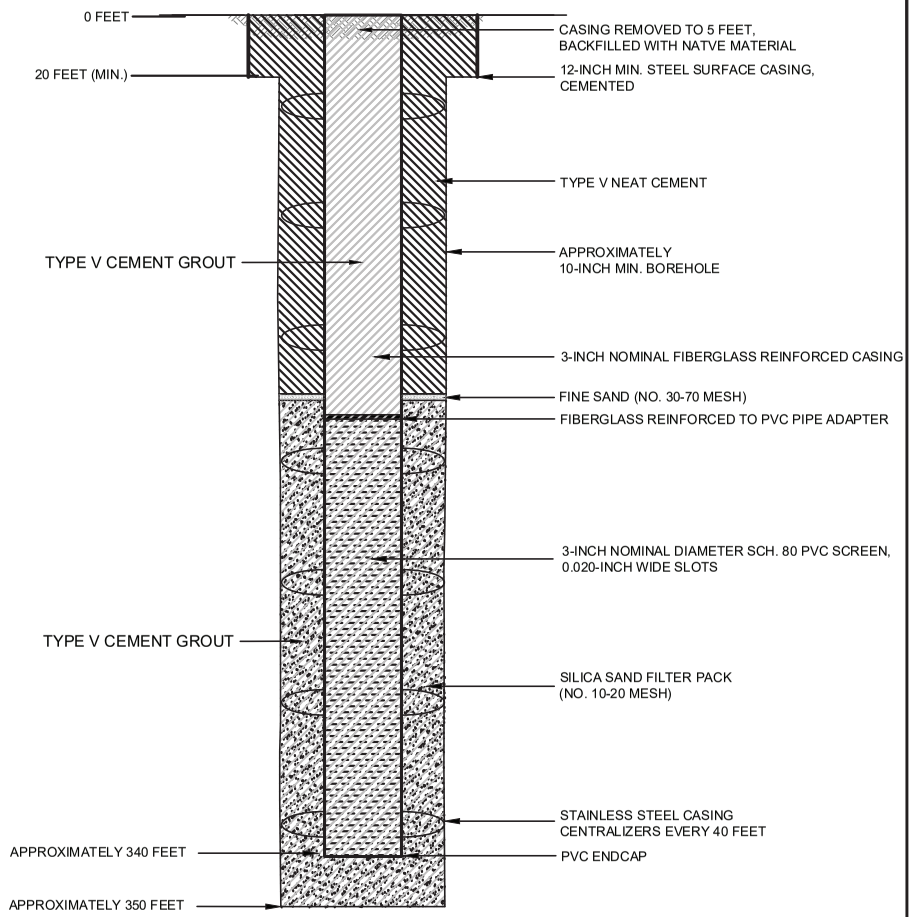

NOTES

1. WELL DESIGN DETAILS ARE BASED ON CORE HOLE AND WELL LOG RECORDS.

HALEY ALDRICH

FLORENCE COPPER, INC.
FLORENCE, ARIZONA

ABANDONMENT SCHEMATIC
OBSERVATION/PERIMETER WELL
OB-4

SEPTEMBER 2019
SCALE: AS SHOWN

FIGURE 1

OMB No. 2040-0042 Approval Expires 4/30/2022

United States Environmental Protection Agency

EPA

WELL REWORK RECORD, PLUGGING AND ABANDONMENT PLAN, OR PLUGGING AND ABANDONMENT AFFIDAVIT

Name and Address, Phone Number and/or Email of Permittee

Florence Copper Project
1575 W Hunt Hwy,
Florence, AZ 85132

Permit or EPA ID Number	API Number	Full Well Name
R9UIC-AZ3-FY11-1		OB-5

State	County
Arizona	Pinal

Locate well in two directions from nearest lines of quarter section and drilling unit

Surface Location

SE 1/4 of SW 1/4 of Section 28 Township 4S Range 9E

Latitude 33.04745309

Longitude -111.4302781

ft. from (N/S) Line of quarter section

ft. from (E/W) Line of quarter section.

Well Class	Timing of Action (pick one)	Type of Action (pick one)
☐ Class I ☐ Class II ☑ Class III ☐ Class V	☑ Notice Prior to Work Date Expected to Commence March 2021 ☐ Report After Work Date Work Ended	☐ Well Rework ☑ Plugging and Abandonment ☐ Conversion to a Non-Injection Well

Provide a narrative description of the work planned to be performed, or that was performed. Use additional pages as necessary. See instructions.

A workover rig capable of performing the required abandonment operations at the required depths will be moved in and set up over the well. The well casing will be inspected to determine the depth to which the well remains open and if any obstructions are present in the casing; the presence and condition of any existing surface casing will also be documented. If necessary, the well casing will be cleaned out to the bottom of the deepest screen or perforation to enable placement of cement seals.

If surface casing is present, an attempt will be made to remove it. If removal of the surface casing is not feasible, it will be left in the hole and perforated as needed to allow an annular seal to be placed to a depth of at least 25 feet bgs. In areas of agricultural use, the surface casing will be cut at least 5 feet bgs and removed.

If the surface casing cannot be removed, it will be perforated from at least 20 feet below the bedrock-LBFU contact to at least 20 feet above the contact; from at least 20 feet below the base of the MFGU to at least 20 feet above the top of the MFGU; and from at least 25 feet bgs to 5 feet bgs.

A tremie pipe will be used to place Type V cement in the open well from the bottom of the well casing to the top of the well casing. Cement retainers, as described above, will be used to force cement grout into the annulus and behind perforated screen intervals, as necessary.

If the well casing has been obstructed, as much cement as possible will be placed from 100 feet below the LBFU-bedrock contact to the top of the casing.

The volume of Type V cement will be recorded and will not be less than the estimated volume of material required to fill each interval. All cement grout will consist of Type V cement, or equivalent approved in accordance with the UIC Permit.

Certification

I certify under the penalty of law that I have personally examined and am familiar with the information submitted in this document and all attachments and that, based on my inquiry of those individuals immediately responsible for obtaining the information, I believe that the information is true, accurate, and complete. I am aware that there are significant penalties for submitting false information, including the possibliity of fine and imprisonment. (Ref. 40 CFR § 144.32)

Name and Official Title *(Please type or print)*	Signature	Date Signed
Dan Johnson, VP - General Manager		10/3/2019

INSTRUCTIONS FOR FORM 7520-19

This form replaces forms 7520-12 and 7520-14. Use this form only when work is planned or has occurred that affects the well's construction or operation as an injection well, including work on the casing, tubing or packer (or for shallow Class V wells, the subsurface fluid emplacement network). Use one form per injection well. While reports or other information developed by contractors or service companies may be attached, this form must be signed by a responsible entity as described at 40 CFR 144.32. Note: operators closing Class V wells should use Form 7520-17.

NAME, ADDRESS, PHONE AND/OR EMAIL OF PERMITTEE: Enter the name and street address, city/town, state, and ZIP code of the permittee. Also provide an email address (if available) and/or a phone number.

PERMIT OR EPA ID NUMBER: Enter the well identification number or permit number assigned to the well by the EPA or the permitting authority.

API NUMBER: Enter the number assigned by the local jurisdiction (usually a State Oil and Gas Agency) using the American Petroleum Institute standard numbering system.

FULL WELL NAME: Enter the full name of the well or project.

Enter the **STATE** and **COUNTY** where the well is located. For States that do not have counties, use the name of that State's equivalent jurisdiction at a more local level.

WELL LOCATION: Fill in the complete township, range, and section to the nearest quarter-quarter section. A township is north or south of the baseline, and a range is east or west of the principal meridian (e.g., T12N, R34W). Also include the distance, in feet, from the nearest north or south line and nearest east or west line of the quarter-section. Also, enter the **latitude** and **longitude** of the well in decimal degrees, to five or six places if possible; be sure to include a negative sign for the longitude of a well in the Western Hemisphere and a negative sign for the latitude of a well in the Southern Hemisphere.

Enter the **WELL CLASS,** i.e., the class of injection well as defined in 40 CFR 144.6.

TIMING OF THE ACTION: Check ***Notice prior to work*** if the activity has not yet occurred (i.e., is planned). Check ***Report after work*** if the activity described has already occurred. As appropriate, include the date the activity is expected to start or the date the activity was completed. (Note this may not be available, e.g., for a plugging plan submitted with a permit application.)

TYPE OF ACTION: Check the appropriate box to describe the kind of activity being reported. Check ***Well Rework*** for work that was/will be performed on the well after it has already been in operation as an injection well. Check ***Plugging and Abandonment*** to report on plans for or descriptions of final closure/plugging after use as an injection well. Check ***Conversion to a Non-Injection Well*** if the well is to be converted to something other than an injection well.

Provide a **NARRATIVE DESCRIPTION** of the work planned to be performed, or that was performed. The narrative should include a description of the main procedures planned or that occurred during the work activity. A service company report, daily report, or similar document may be attached if it includes all the requested information and is clear and legible.

For well reworks, include the following information: The reason for the well rework; depths of activity; type of activity; changes to injection well configuration, well casing, or cement behind casing; any plug added to the well and its depth; any newly drilled interval and its depth; method(s) to demonstrate that the well has mechanical integrity (as applicable); and any deviations from the approved rework plan (as applicable).

For a well plugging plan, include the following information: Reason for the well plugging; number of plugs placed, and their depths; materials used as plugs (e.g., cast iron bridge plug, cement, cement retainer); method to set plugs; and wait-on-cement times, if any. Also provide one or more cost estimates from an independent firm in the business of plugging and abandoning wells to plug the well as described in the plan.

For well plugging affidavit, include the following information: Reason for the well plugging; number of plugs placed, and their depths; materials used as plugs (e.g., cast iron bridge plug, cement, cement retainer); method to set plugs; wait-on-cement times, if any; and any deviations from the approved plugging plan (if applicable).

For conversion to a non-injection well, include the following information: Depths of activity; type of activity; changes to injection well configuration, well casing, or cement behind casing; any plug added to the well and its depth; any newly drilled interval and its depth; depths of new perforations; and method(s) to demonstrate that the well has mechanical integrity (as applicable).

For all of the above activities, include a well sketch depicting the work, results of well tests/logging performed, service company tickets, and any other available information demonstrating how the work was/is to be performed. Also, specify whether depths are below ground surface, relative to Kelly bushing, etc.

CERTIFICATION: This form must be signed and dated by either: a responsible corporate officer for a corporation, by a general partner for a partnership, by the proprietor of a sole proprietorship, or by a principal executive or ranking elected official for a public agency.

PAPERWORK REDUCTION ACT NOTICE: The public reporting and recordkeeping burden for this collection of information is estimated to average between 6.0 and 7.9 hours per response, depending on the injection well class. Burden means the total time, effort, or financial resource expended by persons to generate, maintain, retain, or disclose or provide information to or for a Federal Agency. This includes the time needed to review instructions; develop, acquire, install, and utilize technology and systems for the purposes of collecting, validating, and verifying information, processing and maintaining information, and disclosing and providing information; adjust the existing ways to comply with any previously applicable instructions and requirements; train personnel to be able to respond to the collection of information; search data sources; complete and review the collection of information; and, transmit or otherwise disclose the information. An agency may not conduct or sponsor, and a person is not required to respond to, a collection of information unless it displays a currently valid OMB control number. Send comments on the Agency's need for this information, the accuracy of the provided burden estimates, and any suggested methods for minimizing respondent burden, including the use of automated collection techniques to Director, Collection Strategies Division, U.S. Environmental Protection Agency (2822), 1200 Pennsylvania Ave., NW., Washington, D.C. 20460. Include the OMB control number in any correspondence. Do not send the completed forms to this address.

Saved by: MNICHOLLS Printed: 7/25/2019 7:20 PM Sheet: HA-FIG-A-L(2)
\\HALEYALDRICH.COM\SHARE\PHX_COMMON\PROJECTS\FLORENCE COPPER\132473 FLORENCE GROUNDWATER PERMITTING\CAD\132473_000-OBSERVATION_WELL_CONSTRUCTION DIAGRAM.DWG

PROPOSED DESIGN OBSERVATION/
PERIMETER WELL OB-5

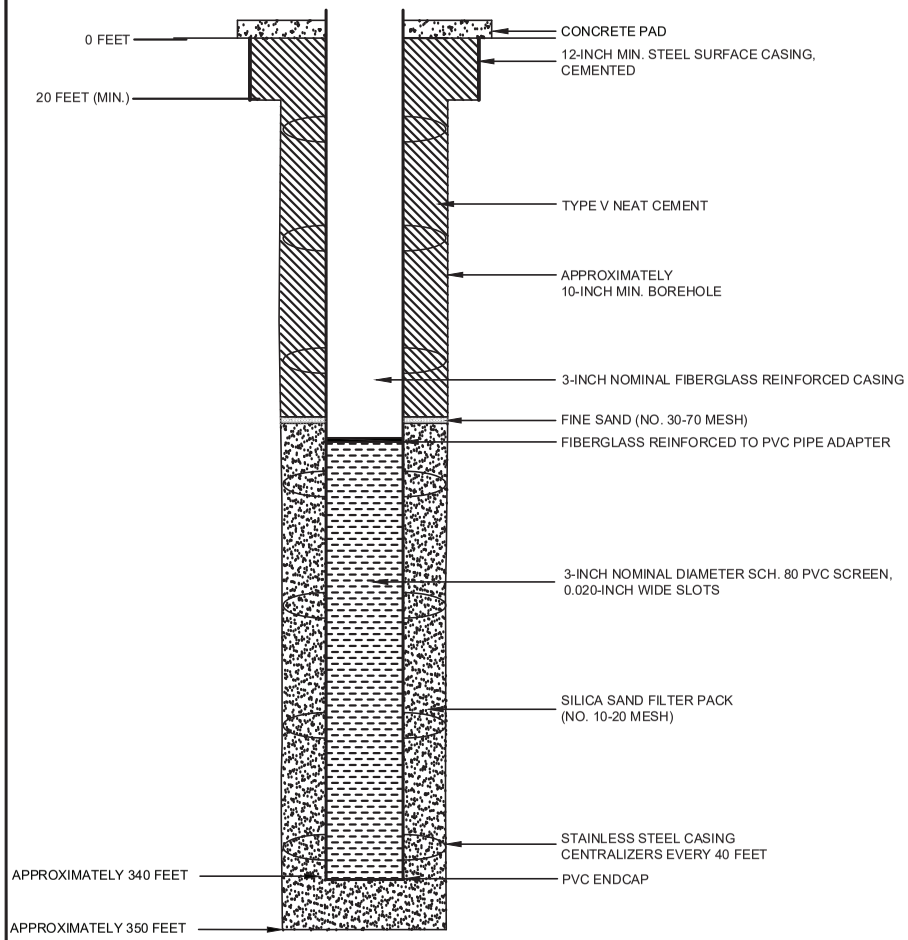

PROPOSED PLUGGING AND
ABANDONMENT
OBSERVATION/PERIMETER WELL OB-5

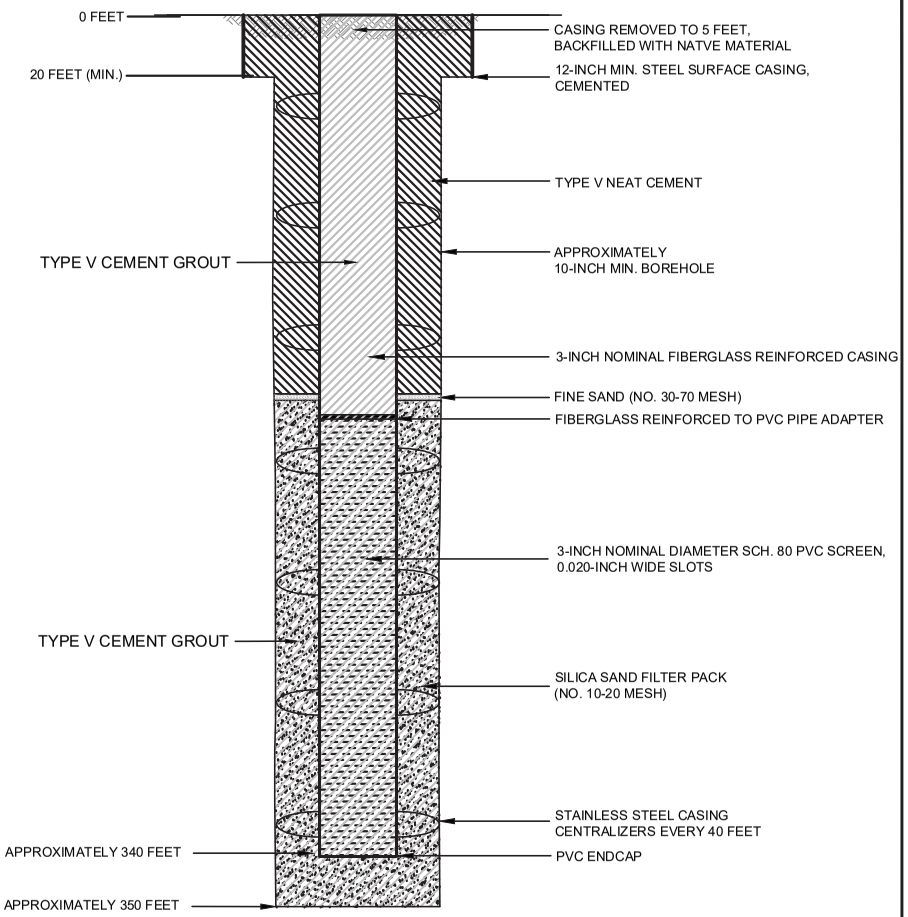

NOTES

1. WELL DESIGN DETAILS ARE BASED ON CORE HOLE AND WELL LOG RECORDS.

HALEY ALDRICH

FLORENCE COPPER, INC.
FLORENCE, ARIZONA

ABANDONMENT SCHEMATIC
OBSERVATION/PERIMETER WELL
OB-5

SEPTEMBER 2019
SCALE: AS SHOWN

FIGURE 1

OMB No. 2040-0042 Approval Expires 4/30/2022

United States Environmental Protection Agency

WELL REWORK RECORD, PLUGGING AND ABANDONMENT PLAN, OR PLUGGING AND ABANDONMENT AFFIDAVIT

Name and Address, Phone Number and/or Email of Permittee

Florence Copper Project
1575 W Hunt Hwy,
Florence, AZ 85132

Permit or EPA ID Number	API Number	Full Well Name
R9UIC-AZ3-FY11-1		OB-6

State	County
Arizona	Pinal

Locate well in two directions from nearest lines of quarter section and drilling unit

Latitude 33.05121877

Surface Location

NE **1/4 of** SW **1/4 of Section** 28 **Township** 4S **Range** 9E

Longitude -111.4318514

_____ **ft. from (N/S)** _____ **Line of quarter section**

_____ **ft. from (E/W)** _____ **Line of quarter section.**

Well Class	Timing of Action (pick one)	Type of Action (pick one)
☐ Class I ☐ Class II ☑ Class III ☐ Class V	☑ Notice Prior to Work Date Expected to Commence March 2021 ☐ Report After Work Date Work Ended	☐ Well Rework ☑ Plugging and Abandonment ☐ Conversion to a Non-Injection Well

Provide a narrative description of the work planned to be performed, or that was performed. Use additional pages as necessary. See instructions.

A workover rig capable of performing the required abandonment operations at the required depths will be moved in and set up over the well. The well casing will be inspected to determine the depth to which the well remains open and if any obstructions are present in the casing; the presence and condition of any existing surface casing will also be documented. If necessary, the well casing will be cleaned out to the bottom of the deepest screen or perforation to enable placement of cement seals.

If surface casing is present, an attempt will be made to remove it. If removal of the surface casing is not feasible, it will be left in the hole and perforated as needed to allow an annular seal to be placed to a depth of at least 25 feet bgs. In areas of agricultural use, the surface casing will be cut at least 5 feet bgs and removed.

If the surface casing cannot be removed, it will be perforated from at least 20 feet below the bedrock-LBFU contact to at least 20 feet above the contact; from at least 20 feet below the base of the MFGU to at least 20 feet above the top of the MFGU; and from at least 25 feet bgs to 5 feet bgs.

A tremie pipe will be used to place Type V cement in the open well from the bottom of the well casing to the top of the well casing. Cement retainers, as described above, will be used to force cement grout into the annulus and behind perforated screen intervals, as necessary.

If the well casing has been obstructed, as much cement as possible will be placed from 100 feet below the LBFU-bedrock contact to the top of the casing.

The volume of Type V cement will be recorded and will not be less than the estimated volume of material required to fill each interval. All cement grout will consist of Type V cement, or equivalent approved in accordance with the UIC Permit.

Certification

I certify under the penalty of law that I have personally examined and am familiar with the information submitted in this document and all attachments and that, based on my inquiry of those individuals immediately responsible for obtaining the information, I believe that the information is true, accurate, and complete. I am aware that there are significant penalties for submitting false information, including the possibliity of fine and imprisonment. (Ref. 40 CFR § 144.32)

Name and Official Title *(Please type or print)*	Signature	Date Signed
Dan Johnson, VP - General Manager		10/3/2019

INSTRUCTIONS FOR FORM 7520-19

This form replaces forms 7520-12 and 7520-14. Use this form only when work is planned or has occurred that affects the well's construction or operation as an injection well, including work on the casing, tubing or packer (or for shallow Class V wells, the subsurface fluid emplacement network). Use one form per injection well. While reports or other information developed by contractors or service companies may be attached, this form must be signed by a responsible entity as described at 40 CFR 144.32. Note: operators closing Class V wells should use Form 7520-17.

NAME, ADDRESS, PHONE AND/OR EMAIL OF PERMITTEE: Enter the name and street address, city/town, state, and ZIP code of the permittee. Also provide an email address (if available) and/or a phone number.

PERMIT OR EPA ID NUMBER: Enter the well identification number or permit number assigned to the well by the EPA or the permitting authority.

API NUMBER: Enter the number assigned by the local jurisdiction (usually a State Oil and Gas Agency) using the American Petroleum Institute standard numbering system.

FULL WELL NAME: Enter the full name of the well or project.

Enter the **STATE** and **COUNTY** where the well is located. For States that do not have counties, use the name of that State's equivalent jurisdiction at a more local level.

WELL LOCATION: Fill in the complete township, range, and section to the nearest quarter-quarter section. A township is north or south of the baseline, and a range is east or west of the principal meridian (e.g., T12N, R34W). Also include the distance, in feet, from the nearest north or south line and nearest east or west line of the quarter-section. Also, enter the **latitude** and **longitude** of the well in decimal degrees, to five or six places if possible; be sure to include a negative sign for the longitude of a well in the Western Hemisphere and a negative sign for the latitude of a well in the Southern Hemisphere.

Enter the **WELL CLASS,** i.e., the class of injection well as defined in 40 CFR 144.6.

TIMING OF THE ACTION: Check ***Notice prior to work*** if the activity has not yet occurred (i.e., is planned). Check ***Report after work*** if the activity described has already occurred. As appropriate, include the date the activity is expected to start or the date the activity was completed. (Note this may not be available, e.g., for a plugging plan submitted with a permit application.)

TYPE OF ACTION: Check the appropriate box to describe the kind of activity being reported. Check ***Well Rework*** for work that was/will be performed on the well after it has already been in operation as an injection well. Check ***Plugging and Abandonment*** to report on plans for or descriptions of final closure/plugging after use as an injection well. Check ***Conversion to a Non-Injection Well*** if the well is to be converted to something other than an injection well.

Provide a **NARRATIVE DESCRIPTION** of the work planned to be performed, or that was performed. The narrative should include a description of the main procedures planned or that occurred during the work activity. A service company report, daily report, or similar document may be attached if it includes all the requested information and is clear and legible.

For well reworks, include the following information: The reason for the well rework; depths of activity; type of activity; changes to injection well configuration, well casing, or cement behind casing; any plug added to the well and its depth; any newly drilled interval and its depth; method(s) to demonstrate that the well has mechanical integrity (as applicable); and any deviations from the approved rework plan (as applicable).

For a well plugging plan, include the following information: Reason for the well plugging; number of plugs placed, and their depths; materials used as plugs (e.g., cast iron bridge plug, cement, cement retainer); method to set plugs; and wait-on-cement times, if any. Also provide one or more cost estimates from an independent firm in the business of plugging and abandoning wells to plug the well as described in the plan.

For well plugging affidavit, include the following information: Reason for the well plugging; number of plugs placed, and their depths; materials used as plugs (e.g., cast iron bridge plug, cement, cement retainer); method to set plugs; wait-on-cement times, if any; and any deviations from the approved plugging plan (if applicable).

For conversion to a non-injection well, include the following information: Depths of activity; type of activity; changes to injection well configuration, well casing, or cement behind casing; any plug added to the well and its depth; any newly drilled interval and its depth; depths of new perforations; and method(s) to demonstrate that the well has mechanical integrity (as applicable).

For all of the above activities, include a well sketch depicting the work, results of well tests/logging performed, service company tickets, and any other available information demonstrating how the work was/is to be performed. Also, specify whether depths are below ground surface, relative to Kelly bushing, etc.

CERTIFICATION: This form must be signed and dated by either: a responsible corporate officer for a corporation, by a general partner for a partnership, by the proprietor of a sole proprietorship, or by a principal executive or ranking elected official for a public agency.

PAPERWORK REDUCTION ACT NOTICE: The public reporting and recordkeeping burden for this collection of information is estimated to average between 6.0 and 7.9 hours per response, depending on the injection well class. Burden means the total time, effort, or financial resource expended by persons to generate, maintain, retain, or disclose or provide information to or for a Federal Agency. This includes the time needed to review instructions; develop, acquire, install, and utilize technology and systems for the purposes of collecting, validating, and verifying information, processing and maintaining information, and disclosing and providing information; adjust the existing ways to comply with any previously applicable instructions and requirements; train personnel to be able to respond to the collection of information; search data sources; complete and review the collection of information; and, transmit or otherwise disclose the information. An agency may not conduct or sponsor, and a person is not required to respond to, a collection of information unless it displays a currently valid OMB control number. Send comments on the Agency's need for this information, the accuracy of the provided burden estimates, and any suggested methods for minimizing respondent burden, including the use of automated collection techniques to Director, Collection Strategies Division, U.S. Environmental Protection Agency (2822), 1200 Pennsylvania Ave., NW., Washington, D.C. 20460. Include the OMB control number in any correspondence. Do not send the completed forms to this address.

Saved by: MNICHOLLS Printed: 7/25/2019 7:20 PM Sheet: HA-FIG-A-L(2)
\\HALEYALDRICH.COM\SHARE\PHX_COMMON\PROJECTS\FLORENCE COPPER\132473 FLORENCE GROUNDWATER PERMITTING\CAD\132473_000-OBSERVATION_WELL_CONSTRUCTION DIAGRAM.DWG

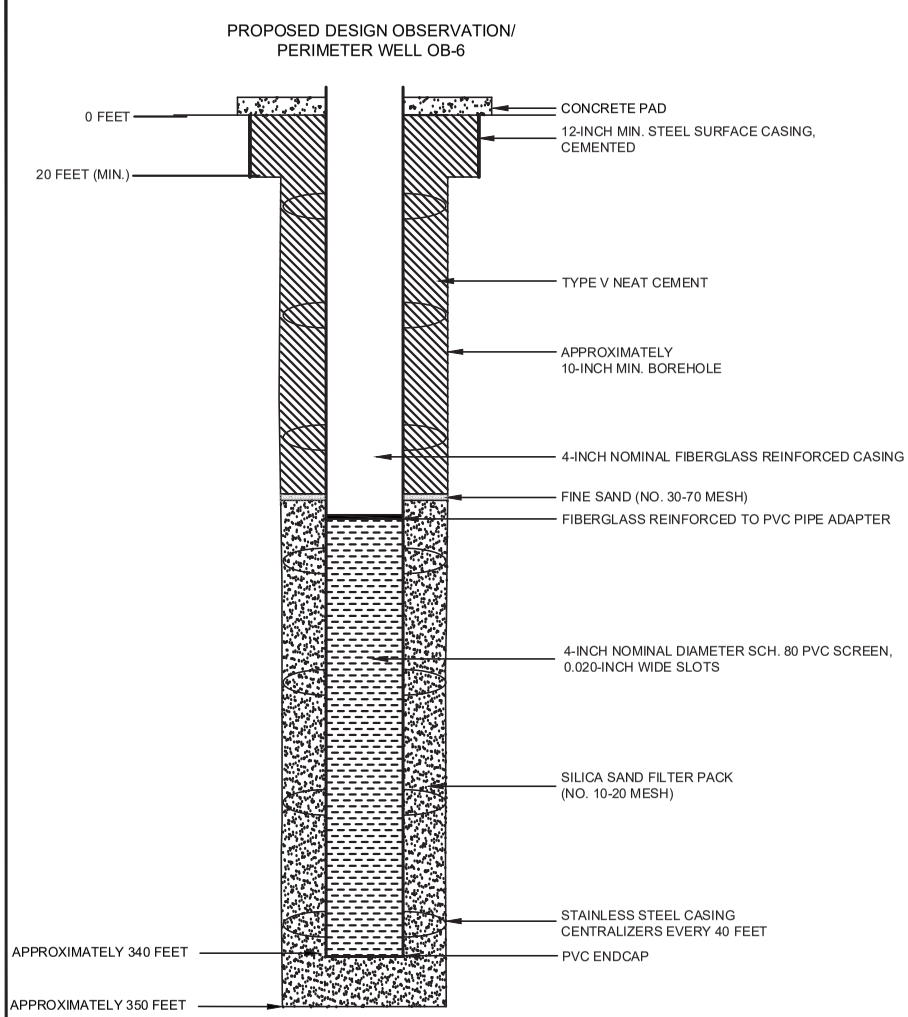

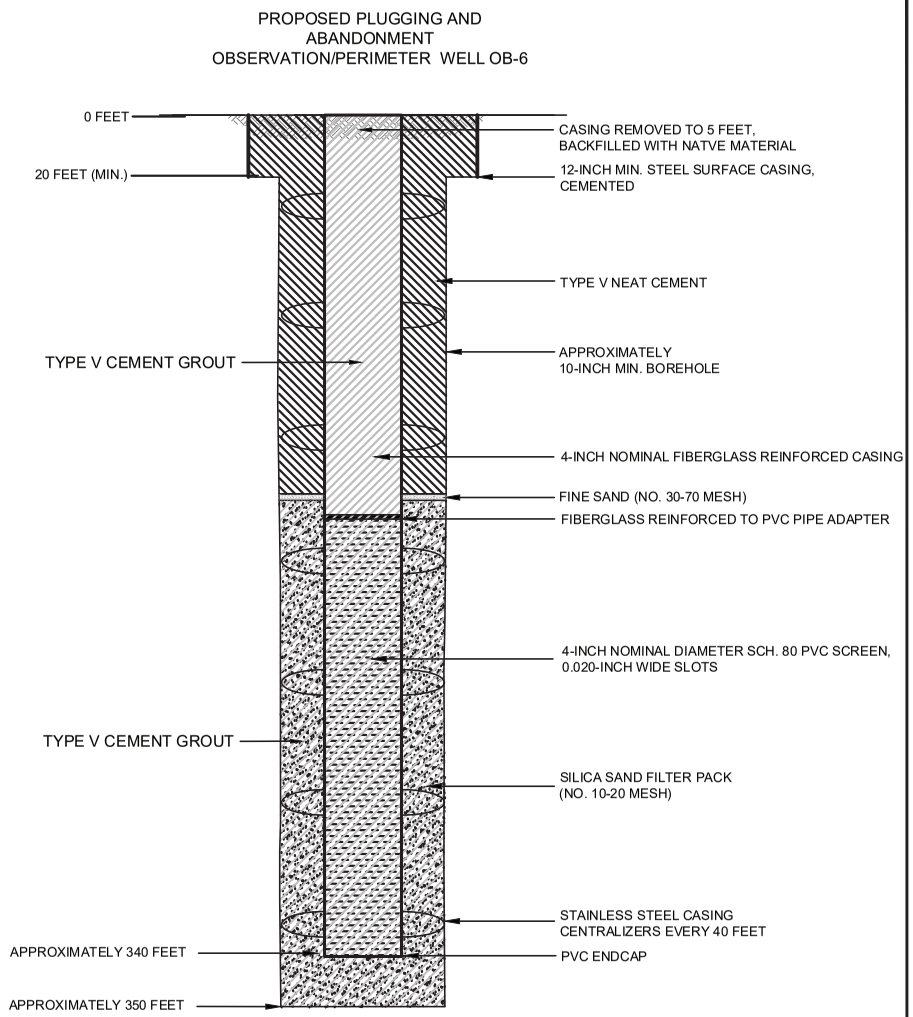

NOTES

1. WELL DESIGN DETAILS ARE BASED ON CORE HOLE AND WELL LOG RECORDS.

HALEY ALDRICH

FLORENCE COPPER, INC.
FLORENCE, ARIZONA

ABANDONMENT SCHEMATIC
OBSERVATION/PERIMETER WELL
OB-6

SEPTEMBER 2019
SCALE: AS SHOWN

FIGURE 1

OMB No. 2040-0042 Approval Expires 4/30/2022

United States Environmental Protection Agency

WELL REWORK RECORD, PLUGGING AND ABANDONMENT PLAN, OR PLUGGING AND ABANDONMENT AFFIDAVIT

Name and Address, Phone Number and/or Email of Permittee

Florence Copper Project
1575 W Hunt Hwy,
Florence, AZ 85132

Permit or EPA ID Number	API Number	Full Well Name
R9UIC-AZ3-FY11-1		OB7-1

State	County
Arizona	Pinal

Locate well in two directions from nearest lines of quarter section and drilling unit

Latitude 33.04839081

Surface Location

SE **1/4 of** SW **1/4 of Section** 28 **Township** 4S **Range** 9E

Longitude -111.4308144

_____ **ft. from (N/S)** _____ **Line of quarter section**

_____ **ft. from (E/W)** _____ **Line of quarter section.**

Well Class	Timing of Action (pick one)	Type of Action (pick one)
☐ Class I ☐ Class II ☑ Class III ☐ Class V	☑ Notice Prior to Work Date Expected to Commence March 2021 ☐ Report After Work Date Work Ended	☐ Well Rework ☑ Plugging and Abandonment ☐ Conversion to a Non-Injection Well

Provide a narrative description of the work planned to be performed, or that was performed. Use additional pages as necessary. See instructions.

A workover rig capable of performing the required abandonment operations at the required depths will be moved in and set up over the well. The well casing will be inspected to determine the depth to which the well remains open and if any obstructions are present in the casing; the presence and condition of any existing surface casing will also be documented. If necessary, the well casing will be cleaned out to the bottom of the deepest screen or perforation to enable placement of cement seals.

If surface casing is present, an attempt will be made to remove it. If removal of the surface casing is not feasible, it will be left in the hole and perforated as needed to allow an annular seal to be placed to a depth of at least 25 feet bgs. In areas of agricultural use, the surface casing will be cut at least 5 feet bgs and removed.

If the surface casing cannot be removed, it will be perforated from at least 20 feet below the bedrock-LBFU contact to at least 20 feet above the contact; from at least 20 feet below the base of the MFGU to at least 20 feet above the top of the MFGU; and from at least 25 feet bgs to 5 feet bgs.

A tremie pipe will be used to place Type V cement in the open well from the bottom of the well casing to the top of the well casing. Cement retainers, as described above, will be used to force cement grout into the annulus and behind perforated screen intervals, as necessary.

If the well casing has been obstructed, as much cement as possible will be placed from 100 feet below the LBFU-bedrock contact to the top of the casing.

The volume of Type V cement will be recorded and will not be less than the estimated volume of material required to fill each interval. All cement grout will consist of Type V cement, or equivalent approved in accordance with the UIC Permit.

Certification

I certify under the penalty of law that I have personally examined and am familiar with the information submitted in this document and all attachments and that, based on my inquiry of those individuals immediately responsible for obtaining the information, I believe that the information is true, accurate, and complete. I am aware that there are significant penalties for submitting false information, including the possibliity of fine and imprisonment. (Ref. 40 CFR § 144.32)

Name and Official Title *(Please type or print)*	Signature	Date Signed
Dan Johnson, VP - General Manager		10/3/2019

INSTRUCTIONS FOR FORM 7520-19

This form replaces forms 7520-12 and 7520-14. Use this form only when work is planned or has occurred that affects the well's construction or operation as an injection well, including work on the casing, tubing or packer (or for shallow Class V wells, the subsurface fluid emplacement network). Use one form per injection well. While reports or other information developed by contractors or service companies may be attached, this form must be signed by a responsible entity as described at 40 CFR 144.32. Note: operators closing Class V wells should use Form 7520-17.

NAME, ADDRESS, PHONE AND/OR EMAIL OF PERMITTEE: Enter the name and street address, city/town, state, and ZIP code of the permittee. Also provide an email address (if available) and/or a phone number.

PERMIT OR EPA ID NUMBER: Enter the well identification number or permit number assigned to the well by the EPA or the permitting authority.

API NUMBER: Enter the number assigned by the local jurisdiction (usually a State Oil and Gas Agency) using the American Petroleum Institute standard numbering system.

FULL WELL NAME: Enter the full name of the well or project.

Enter the **STATE** and **COUNTY** where the well is located. For States that do not have counties, use the name of that State's equivalent jurisdiction at a more local level.

WELL LOCATION: Fill in the complete township, range, and section to the nearest quarter-quarter section. A township is north or south of the baseline, and a range is east or west of the principal meridian (e.g., T12N, R34W). Also include the distance, in feet, from the nearest north or south line and nearest east or west line of the quarter-section. Also, enter the **latitude** and **longitude** of the well in decimal degrees, to five or six places if possible; be sure to include a negative sign for the longitude of a well in the Western Hemisphere and a negative sign for the latitude of a well in the Southern Hemisphere.

Enter the **WELL CLASS,** i.e., the class of injection well as defined in 40 CFR 144.6.

TIMING OF THE ACTION: Check ***Notice prior to work*** if the activity has not yet occurred (i.e., is planned). Check ***Report after work*** if the activity described has already occurred. As appropriate, include the date the activity is expected to start or the date the activity was completed. (Note this may not be available, e.g., for a plugging plan submitted with a permit application.)

TYPE OF ACTION: Check the appropriate box to describe the kind of activity being reported. Check ***Well Rework*** for work that was/will be performed on the well after it has already been in operation as an injection well. Check ***Plugging and Abandonment*** to report on plans for or descriptions of final closure/plugging after use as an injection well. Check ***Conversion to a Non-Injection Well*** if the well is to be converted to something other than an injection well.

Provide a **NARRATIVE DESCRIPTION** of the work planned to be performed, or that was performed. The narrative should include a description of the main procedures planned or that occurred during the work activity. A service company report, daily report, or similar document may be attached if it includes all the requested information and is clear and legible.

For well reworks, include the following information: The reason for the well rework; depths of activity; type of activity; changes to injection well configuration, well casing, or cement behind casing; any plug added to the well and its depth; any newly drilled interval and its depth; method(s) to demonstrate that the well has mechanical integrity (as applicable); and any deviations from the approved rework plan (as applicable).

For a well plugging plan, include the following information: Reason for the well plugging; number of plugs placed, and their depths; materials used as plugs (e.g., cast iron bridge plug, cement, cement retainer); method to set plugs; and wait-on-cement times, if any. Also provide one or more cost estimates from an independent firm in the business of plugging and abandoning wells to plug the well as described in the plan.

For well plugging affidavit, include the following information: Reason for the well plugging; number of plugs placed, and their depths; materials used as plugs (e.g., cast iron bridge plug, cement, cement retainer); method to set plugs; wait-on-cement times, if any; and any deviations from the approved plugging plan (if applicable).

For conversion to a non-injection well, include the following information: Depths of activity; type of activity; changes to injection well configuration, well casing, or cement behind casing; any plug added to the well and its depth; any newly drilled interval and its depth; depths of new perforations; and method(s) to demonstrate that the well has mechanical integrity (as applicable).

For all of the above activities, include a well sketch depicting the work, results of well tests/logging performed, service company tickets, and any other available information demonstrating how the work was/is to be performed. Also, specify whether depths are below ground surface, relative to Kelly bushing, etc.

CERTIFICATION: This form must be signed and dated by either: a responsible corporate officer for a corporation, by a general partner for a partnership, by the proprietor of a sole proprietorship, or by a principal executive or ranking elected official for a public agency.

PAPERWORK REDUCTION ACT NOTICE: The public reporting and recordkeeping burden for this collection of information is estimated to average between 6.0 and 7.9 hours per response, depending on the injection well class. Burden means the total time, effort, or financial resource expended by persons to generate, maintain, retain, or disclose or provide information to or for a Federal Agency. This includes the time needed to review instructions; develop, acquire, install, and utilize technology and systems for the purposes of collecting, validating, and verifying information, processing and maintaining information, and disclosing and providing information; adjust the existing ways to comply with any previously applicable instructions and requirements; train personnel to be able to respond to the collection of information; search data sources; complete and review the collection of information; and, transmit or otherwise disclose the information. An agency may not conduct or sponsor, and a person is not required to respond to, a collection of information unless it displays a currently valid OMB control number. Send comments on the Agency's need for this information, the accuracy of the provided burden estimates, and any suggested methods for minimizing respondent burden, including the use of automated collection techniques to Director, Collection Strategies Division, U.S. Environmental Protection Agency (2822), 1200 Pennsylvania Ave., NW., Washington, D.C. 20460. Include the OMB control number in any correspondence. Do not send the completed forms to this address.

PROPOSED DESIGN OBSERVATION/
PERIMETER WELL OB7-1

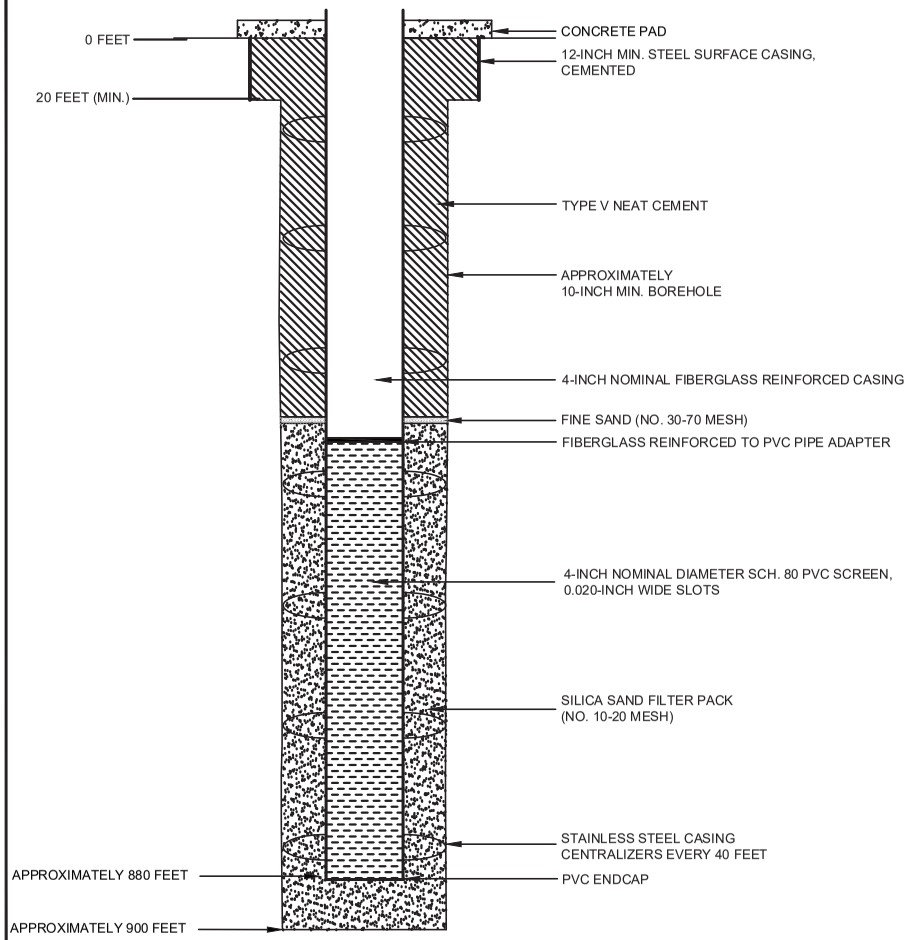

PROPOSED PLUGGING AND
ABANDONMENT
OBSERVATION/PERIMETER WELL OB7-1

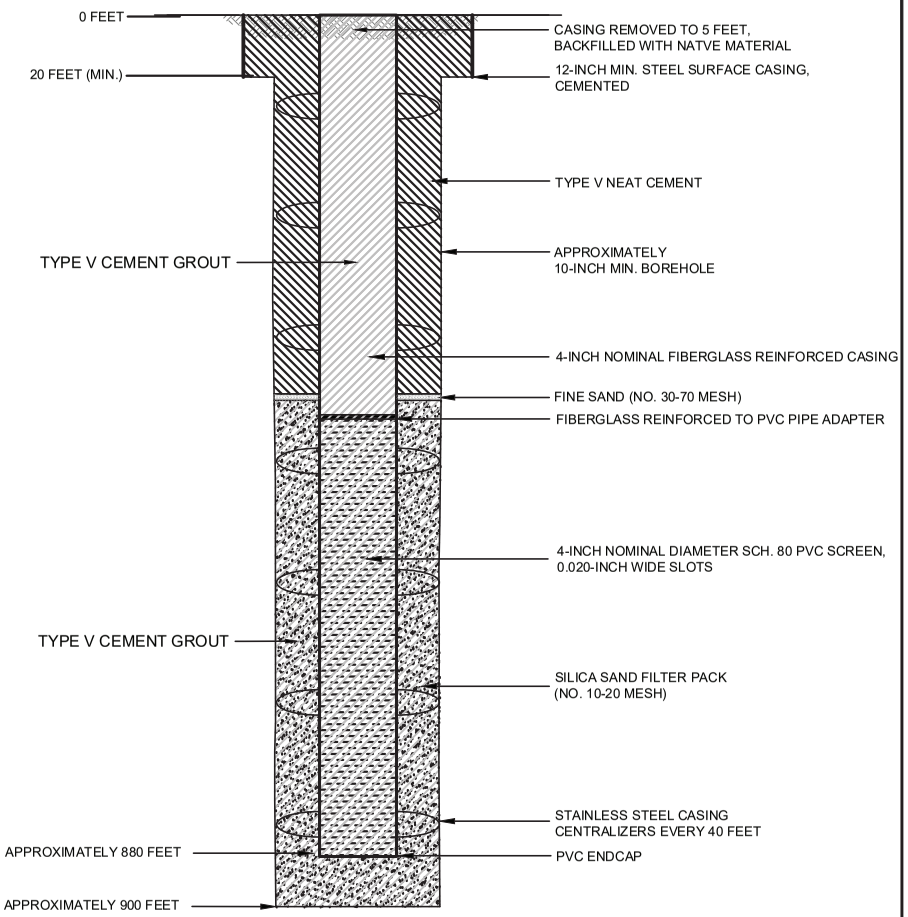

NOTES

1. WELL DESIGN DETAILS ARE BASED ON CORE HOLE AND WELL LOG RECORDS.

HALEY ALDRICH

FLORENCE COPPER, INC.
FLORENCE, ARIZONA

ABANDONMENT SCHEMATIC
OBSERVATION/PERIMETER WELL
OB7-1

SEPTEMBER 2019
SCALE: AS SHOWN

FIGURE 1

OMB No. 2040-0042 Approval Expires 4/30/2022

United States Environmental Protection Agency

EPA

WELL REWORK RECORD, PLUGGING AND ABANDONMENT PLAN, OR PLUGGING AND ABANDONMENT AFFIDAVIT

Name and Address, Phone Number and/or Email of Permittee

Florence Copper Project
1575 W Hunt Hwy,
Florence, AZ 85132

Permit or EPA ID Number	API Number	Full Well Name
R9UIC-AZ3-FY11-1		P5-O

State	County
Arizona	Pinal

Locate well in two directions from nearest lines of quarter section and drilling unit

Latitude 33.04629749

Longitude -111.4287797

Surface Location

SW **1/4 of** SE **1/4 of Section** 28 **Township** 4S **Range** 9E

_____ **ft. from (N/S)** _____ **Line of quarter section**

_____ **ft. from (E/W)** _____ **Line of quarter section.**

Well Class	Timing of Action (pick one)	Type of Action (pick one)
☐ Class I ☐ Class II ☑ Class III ☐ Class V	☑ Notice Prior to Work Date Expected to Commence March 2021 ☐ Report After Work Date Work Ended	☐ Well Rework ☑ Plugging and Abandonment ☐ Conversion to a Non-Injection Well

Provide a narrative description of the work planned to be performed, or that was performed. Use additional pages as necessary. See instructions.

A workover rig capable of performing the required abandonment operations at the required depths will be moved in and set up over the well. The well casing will be inspected to determine the depth to which the well remains open and if any obstructions are present in the casing; the presence and condition of any existing surface casing will also be documented. If necessary, the well casing will be cleaned out to the bottom of the deepest screen or perforation to enable placement of cement seals.

If surface casing is present, an attempt will be made to remove it. If removal of the surface casing is not feasible, it will be left in the hole and perforated as needed to allow an annular seal to be placed to a depth of at least 25 feet bgs. In areas of agricultural use, the surface casing will be cut at least 5 feet bgs and removed.

If the surface casing cannot be removed, it will be perforated from at least 20 feet below the bedrock-LBFU contact to at least 20 feet above the contact; from at least 20 feet below the base of the MFGU to at least 20 feet above the top of the MFGU; and from at least 25 feet bgs to 5 feet bgs.

A tremie pipe will be used to place Type V cement in the open well from the bottom of the well casing to the top of the well casing. Cement retainers, as described above, will be used to force cement grout into the annulus and behind perforated screen intervals, as necessary.

If the well casing has been obstructed, as much cement as possible will be placed from 100 feet below the LBFU-bedrock contact to the top of the casing.

The volume of Type V cement will be recorded and will not be less than the estimated volume of material required to fill each interval. All cement grout will consist of Type V cement, or equivalent approved in accordance with the UIC Permit.

Certification

I certify under the penalty of law that I have personally examined and am familiar with the information submitted in this document and all attachments and that, based on my inquiry of those individuals immediately responsible for obtaining the information, I believe that the information is true, accurate, and complete. I am aware that there are significant penalties for submitting false information, including the possibliity of fine and imprisonment. (Ref. 40 CFR § 144.32)

Name and Official Title *(Please type or print)*	Signature	Date Signed
Dan Johnson, VP - General Manager		10/3/2019

INSTRUCTIONS FOR FORM 7520-19

This form replaces forms 7520-12 and 7520-14. Use this form only when work is planned or has occurred that affects the well's construction or operation as an injection well, including work on the casing, tubing or packer (or for shallow Class V wells, the subsurface fluid emplacement network). Use one form per injection well. While reports or other information developed by contractors or service companies may be attached, this form must be signed by a responsible entity as described at 40 CFR 144.32. Note: operators closing Class V wells should use Form 7520-17.

NAME, ADDRESS, PHONE AND/OR EMAIL OF PERMITTEE: Enter the name and street address, city/town, state, and ZIP code of the permittee. Also provide an email address (if available) and/or a phone number.

PERMIT OR EPA ID NUMBER: Enter the well identification number or permit number assigned to the well by the EPA or the permitting authority.

API NUMBER: Enter the number assigned by the local jurisdiction (usually a State Oil and Gas Agency) using the American Petroleum Institute standard numbering system.

FULL WELL NAME: Enter the full name of the well or project.

Enter the **STATE** and **COUNTY** where the well is located. For States that do not have counties, use the name of that State's equivalent jurisdiction at a more local level.

WELL LOCATION: Fill in the complete township, range, and section to the nearest quarter-quarter section. A township is north or south of the baseline, and a range is east or west of the principal meridian (e.g., T12N, R34W). Also include the distance, in feet, from the nearest north or south line and nearest east or west line of the quarter-section. Also, enter the **latitude** and **longitude** of the well in decimal degrees, to five or six places if possible; be sure to include a negative sign for the longitude of a well in the Western Hemisphere and a negative sign for the latitude of a well in the Southern Hemisphere.

Enter the **WELL CLASS,** i.e., the class of injection well as defined in 40 CFR 144.6.

TIMING OF THE ACTION: Check ***Notice prior to work*** if the activity has not yet occurred (i.e., is planned). Check ***Report after work*** if the activity described has already occurred. As appropriate, include the date the activity is expected to start or the date the activity was completed. (Note this may not be available, e.g., for a plugging plan submitted with a permit application.)

TYPE OF ACTION: Check the appropriate box to describe the kind of activity being reported. Check ***Well Rework*** for work that was/will be performed on the well after it has already been in operation as an injection well. Check ***Plugging and Abandonment*** to report on plans for or descriptions of final closure/plugging after use as an injection well. Check ***Conversion to a Non-Injection Well*** if the well is to be converted to something other than an injection well.

Provide a **NARRATIVE DESCRIPTION** of the work planned to be performed, or that was performed. The narrative should include a description of the main procedures planned or that occurred during the work activity. A service company report, daily report, or similar document may be attached if it includes all the requested information and is clear and legible.

For well reworks, include the following information: The reason for the well rework; depths of activity; type of activity; changes to injection well configuration, well casing, or cement behind casing; any plug added to the well and its depth; any newly drilled interval and its depth; method(s) to demonstrate that the well has mechanical integrity (as applicable); and any deviations from the approved rework plan (as applicable).

For a well plugging plan, include the following information: Reason for the well plugging; number of plugs placed, and their depths; materials used as plugs (e.g., cast iron bridge plug, cement, cement retainer); method to set plugs; and wait-on-cement times, if any. Also provide one or more cost estimates from an independent firm in the business of plugging and abandoning wells to plug the well as described in the plan.

For well plugging affidavit, include the following information: Reason for the well plugging; number of plugs placed, and their depths; materials used as plugs (e.g., cast iron bridge plug, cement, cement retainer); method to set plugs; wait-on-cement times, if any; and any deviations from the approved plugging plan (if applicable).

For conversion to a non-injection well, include the following information: Depths of activity; type of activity; changes to injection well configuration, well casing, or cement behind casing; any plug added to the well and its depth; any newly drilled interval and its depth; depths of new perforations; and method(s) to demonstrate that the well has mechanical integrity (as applicable).

For all of the above activities, include a well sketch depicting the work, results of well tests/logging performed, service company tickets, and any other available information demonstrating how the work was/is to be performed. Also, specify whether depths are below ground surface, relative to Kelly bushing, etc.

CERTIFICATION: This form must be signed and dated by either: a responsible corporate officer for a corporation, by a general partner for a partnership, by the proprietor of a sole proprietorship, or by a principal executive or ranking elected official for a public agency.

PAPERWORK REDUCTION ACT NOTICE: The public reporting and recordkeeping burden for this collection of information is estimated to average between 6.0 and 7.9 hours per response, depending on the injection well class. Burden means the total time, effort, or financial resource expended by persons to generate, maintain, retain, or disclose or provide information to or for a Federal Agency. This includes the time needed to review instructions; develop, acquire, install, and utilize technology and systems for the purposes of collecting, validating, and verifying information, processing and maintaining information, and disclosing and providing information; adjust the existing ways to comply with any previously applicable instructions and requirements; train personnel to be able to respond to the collection of information; search data sources; complete and review the collection of information; and, transmit or otherwise disclose the information. An agency may not conduct or sponsor, and a person is not required to respond to, a collection of information unless it displays a currently valid OMB control number. Send comments on the Agency's need for this information, the accuracy of the provided burden estimates, and any suggested methods for minimizing respondent burden, including the use of automated collection techniques to Director, Collection Strategies Division, U.S. Environmental Protection Agency (2822), 1200 Pennsylvania Ave., NW., Washington, D.C. 20460. Include the OMB control number in any correspondence. Do not send the completed forms to this address.

Saved by: MNICHOLLS Printed: 7/27/2019 5:44 PM Sheet: HA-FIG-A-L
\\HALEYALDRICH.COM\SHARE\PHX_COMMON\PROJECTS\FLORENCE COPPER\132473 FLORENCE GROUNDWATER PERMITTING\CAD\132473_000-INJECTION_RECOVERY WELL_3SCREENS.DWG

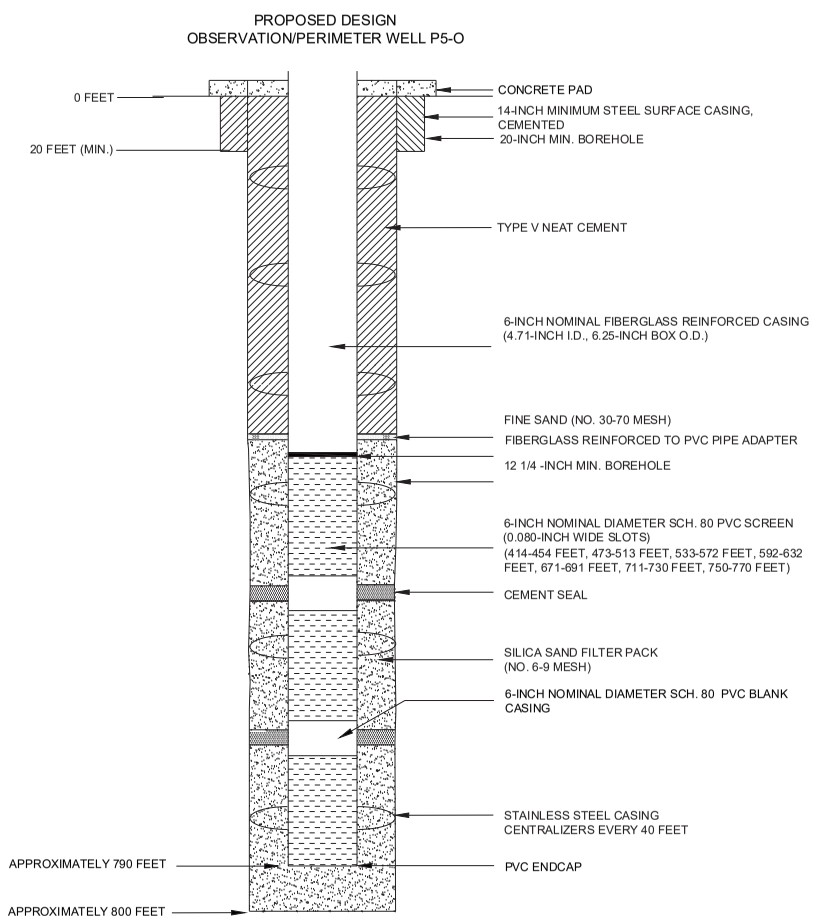

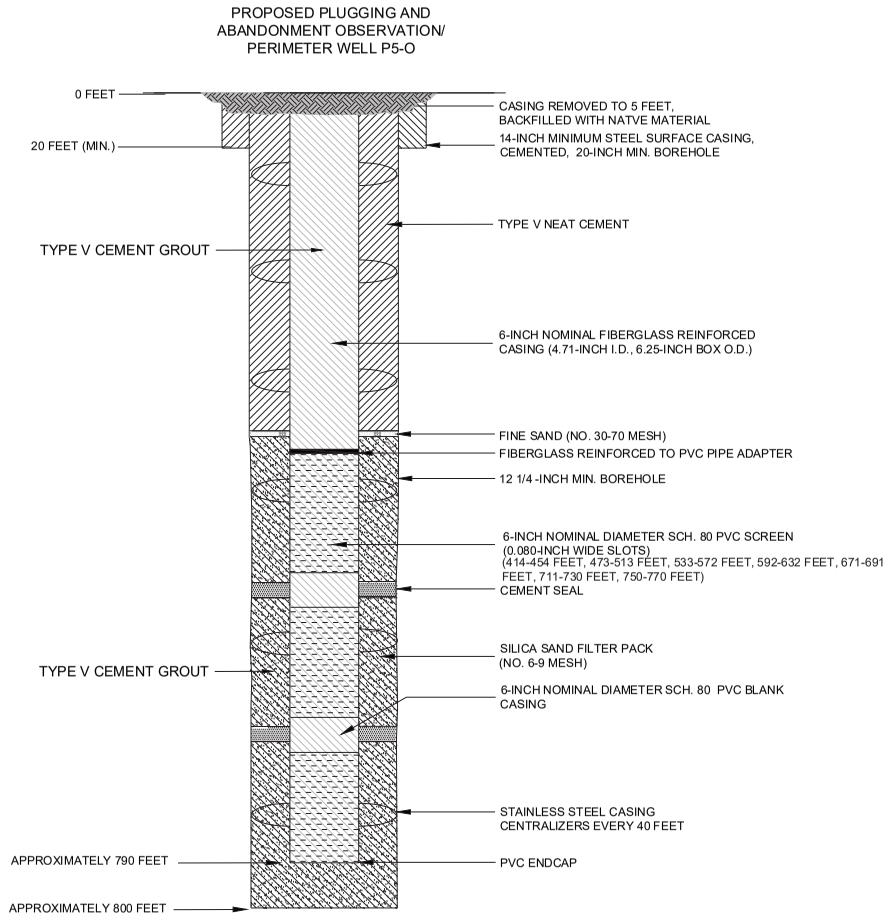

NOTES

1. WELL DESIGN DETAILS ARE BASED ON CORE HOLE AND WELL LOG RECORDS.

HALEY ALDRICH

FLORENCE COPPER, INC.
FLORENCE, ARIZONA

ABANDONMENT SCHEMATIC
OBSERVATION/PERIMETER
WELL P5-O

SCALE: AS SHOWN
SEPTEMBER 2019

FIGURE 1

OMB No. 2040-0042 Approval Expires 4/30/2022

United States Environmental Protection Agency

WELL REWORK RECORD, PLUGGING AND ABANDONMENT PLAN, OR PLUGGING AND ABANDONMENT AFFIDAVIT

Name and Address, Phone Number and/or Email of Permittee

Florence Copper Project
1575 W Hunt Hwy,
Florence, AZ 85132

Permit or EPA ID Number	API Number	Full Well Name
R9UIC-AZ3-FY11-1		P8.1-O

State	County
Arizona	Pinal

Locate well in two directions from nearest lines of quarter section and drilling unit

Latitude 33.05206105

Longitude -111.4290592

Surface Location

NW **1/4 of** SE **1/4 of Section** 28 **Township** 4S **Range** 9E

_____ **ft. from (N/S)** _____ **Line of quarter section**

_____ **ft. from (E/W)** _____ **Line of quarter section.**

Well Class	Timing of Action (pick one)	Type of Action (pick one)
☐ Class I ☐ Class II ☑ Class III ☐ Class V	☑ Notice Prior to Work Date Expected to Commence March 2021 ☐ Report After Work Date Work Ended	☐ Well Rework ☑ Plugging and Abandonment ☐ Conversion to a Non-Injection Well

Provide a narrative description of the work planned to be performed, or that was performed. Use additional pages as necessary. See instructions.

A workover rig capable of performing the required abandonment operations at the required depths will be moved in and set up over the well. The well casing will be inspected to determine the depth to which the well remains open and if any obstructions are present in the casing; the presence and condition of any existing surface casing will also be documented. If necessary, the well casing will be cleaned out to the bottom of the deepest screen or perforation to enable placement of cement seals.

If surface casing is present, an attempt will be made to remove it. If removal of the surface casing is not feasible, it will be left in the hole and perforated as needed to allow an annular seal to be placed to a depth of at least 25 feet bgs. In areas of agricultural use, the surface casing will be cut at least 5 feet bgs and removed.

If the surface casing cannot be removed, it will be perforated from at least 20 feet below the bedrock-LBFU contact to at least 20 feet above the contact; from at least 20 feet below the base of the MFGU to at least 20 feet above the top of the MFGU; and from at least 25 feet bgs to 5 feet bgs.

A tremie pipe will be used to place Type V cement in the open well from the bottom of the well casing to the top of the well casing. Cement retainers, as described above, will be used to force cement grout into the annulus and behind perforated screen intervals, as necessary.

If the well casing has been obstructed, as much cement as possible will be placed from 100 feet below the LBFU-bedrock contact to the top of the casing.

The volume of Type V cement will be recorded and will not be less than the estimated volume of material required to fill each interval. All cement grout will consist of Type V cement, or equivalent approved in accordance with the UIC Permit.

Certification

I certify under the penalty of law that I have personally examined and am familiar with the information submitted in this document and all attachments and that, based on my inquiry of those individuals immediately responsible for obtaining the information, I believe that the information is true, accurate, and complete. I am aware that there are significant penalties for submitting false information, including the possibliity of fine and imprisonment. (Ref. 40 CFR § 144.32)

Name and Official Title *(Please type or print)*	Signature	Date Signed
Dan Johnson, VP - General Manager		10/3/2019

INSTRUCTIONS FOR FORM 7520-19

This form replaces forms 7520-12 and 7520-14. Use this form only when work is planned or has occurred that affects the well's construction or operation as an injection well, including work on the casing, tubing or packer (or for shallow Class V wells, the subsurface fluid emplacement network). Use one form per injection well. While reports or other information developed by contractors or service companies may be attached, this form must be signed by a responsible entity as described at 40 CFR 144.32. Note: operators closing Class V wells should use Form 7520-17.

NAME, ADDRESS, PHONE AND/OR EMAIL OF PERMITTEE: Enter the name and street address, city/town, state, and ZIP code of the permittee. Also provide an email address (if available) and/or a phone number.

PERMIT OR EPA ID NUMBER: Enter the well identification number or permit number assigned to the well by the EPA or the permitting authority.

API NUMBER: Enter the number assigned by the local jurisdiction (usually a State Oil and Gas Agency) using the American Petroleum Institute standard numbering system.

FULL WELL NAME: Enter the full name of the well or project.

Enter the **STATE** and **COUNTY** where the well is located. For States that do not have counties, use the name of that State's equivalent jurisdiction at a more local level.

WELL LOCATION: Fill in the complete township, range, and section to the nearest quarter-quarter section. A township is north or south of the baseline, and a range is east or west of the principal meridian (e.g., T12N, R34W). Also include the distance, in feet, from the nearest north or south line and nearest east or west line of the quarter-section. Also, enter the **latitude** and **longitude** of the well in decimal degrees, to five or six places if possible; be sure to include a negative sign for the longitude of a well in the Western Hemisphere and a negative sign for the latitude of a well in the Southern Hemisphere.

Enter the **WELL CLASS,** i.e., the class of injection well as defined in 40 CFR 144.6.

TIMING OF THE ACTION: Check ***Notice prior to work*** if the activity has not yet occurred (i.e., is planned). Check ***Report after work*** if the activity described has already occurred. As appropriate, include the date the activity is expected to start or the date the activity was completed. (Note this may not be available, e.g., for a plugging plan submitted with a permit application.)

TYPE OF ACTION: Check the appropriate box to describe the kind of activity being reported. Check ***Well Rework*** for work that was/will be performed on the well after it has already been in operation as an injection well. Check ***Plugging and Abandonment*** to report on plans for or descriptions of final closure/plugging after use as an injection well. Check ***Conversion to a Non-Injection Well*** if the well is to be converted to something other than an injection well.

Provide a **NARRATIVE DESCRIPTION** of the work planned to be performed, or that was performed. The narrative should include a description of the main procedures planned or that occurred during the work activity. A service company report, daily report, or similar document may be attached if it includes all the requested information and is clear and legible.

For well reworks, include the following information: The reason for the well rework; depths of activity; type of activity; changes to injection well configuration, well casing, or cement behind casing; any plug added to the well and its depth; any newly drilled interval and its depth; method(s) to demonstrate that the well has mechanical integrity (as applicable); and any deviations from the approved rework plan (as applicable).

For a well plugging plan, include the following information: Reason for the well plugging; number of plugs placed, and their depths; materials used as plugs (e.g., cast iron bridge plug, cement, cement retainer); method to set plugs; and wait-on-cement times, if any. Also provide one or more cost estimates from an independent firm in the business of plugging and abandoning wells to plug the well as described in the plan.

For well plugging affidavit, include the following information: Reason for the well plugging; number of plugs placed, and their depths; materials used as plugs (e.g., cast iron bridge plug, cement, cement retainer); method to set plugs; wait-on-cement times, if any; and any deviations from the approved plugging plan (if applicable).

For conversion to a non-injection well, include the following information: Depths of activity; type of activity; changes to injection well configuration, well casing, or cement behind casing; any plug added to the well and its depth; any newly drilled interval and its depth; depths of new perforations; and method(s) to demonstrate that the well has mechanical integrity (as applicable).

For all of the above activities, include a well sketch depicting the work, results of well tests/logging performed, service company tickets, and any other available information demonstrating how the work was/is to be performed. Also, specify whether depths are below ground surface, relative to Kelly bushing, etc.

CERTIFICATION: This form must be signed and dated by either: a responsible corporate officer for a corporation, by a general partner for a partnership, by the proprietor of a sole proprietorship, or by a principal executive or ranking elected official for a public agency.

PAPERWORK REDUCTION ACT NOTICE: The public reporting and recordkeeping burden for this collection of information is estimated to average between 6.0 and 7.9 hours per response, depending on the injection well class. Burden means the total time, effort, or financial resource expended by persons to generate, maintain, retain, or disclose or provide information to or for a Federal Agency. This includes the time needed to review instructions; develop, acquire, install, and utilize technology and systems for the purposes of collecting, validating, and verifying information, processing and maintaining information, and disclosing and providing information; adjust the existing ways to comply with any previously applicable instructions and requirements; train personnel to be able to respond to the collection of information; search data sources; complete and review the collection of information; and, transmit or otherwise disclose the information. An agency may not conduct or sponsor, and a person is not required to respond to, a collection of information unless it displays a currently valid OMB control number. Send comments on the Agency's need for this information, the accuracy of the provided burden estimates, and any suggested methods for minimizing respondent burden, including the use of automated collection techniques to Director, Collection Strategies Division, U.S. Environmental Protection Agency (2822), 1200 Pennsylvania Ave., NW., Washington, D.C. 20460. Include the OMB control number in any correspondence. Do not send the completed forms to this address.

Saved by: MNICHOLLS Printed: 7/25/2019 7:20 PM Sheet: HA-FIG-A-L(2)
\\HALEYALDRICH.COM\SHARE\PHX_COMMON\PROJECTS\FLORENCE COPPER\132473 FLORENCE GROUNDWATER PERMITTING\CAD\132473_000-OBSERVATION_WELL_CONSTRUCTION DIAGRAM.DWG

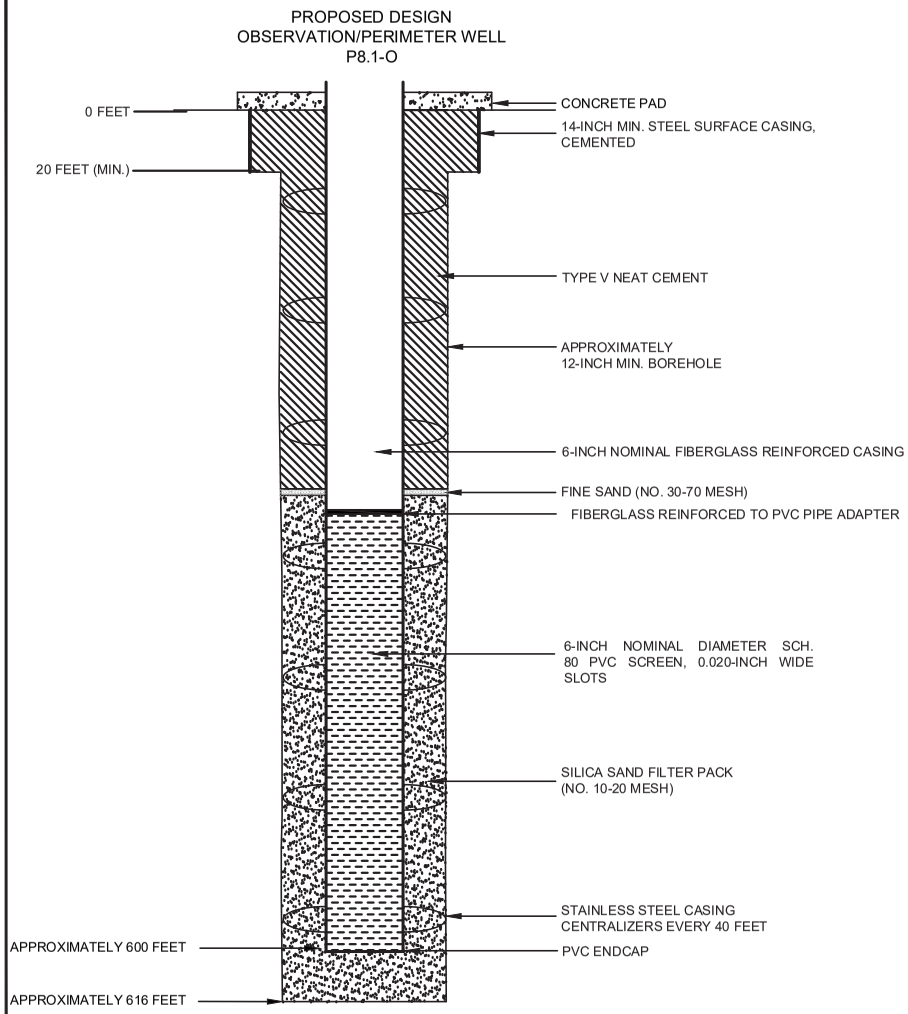

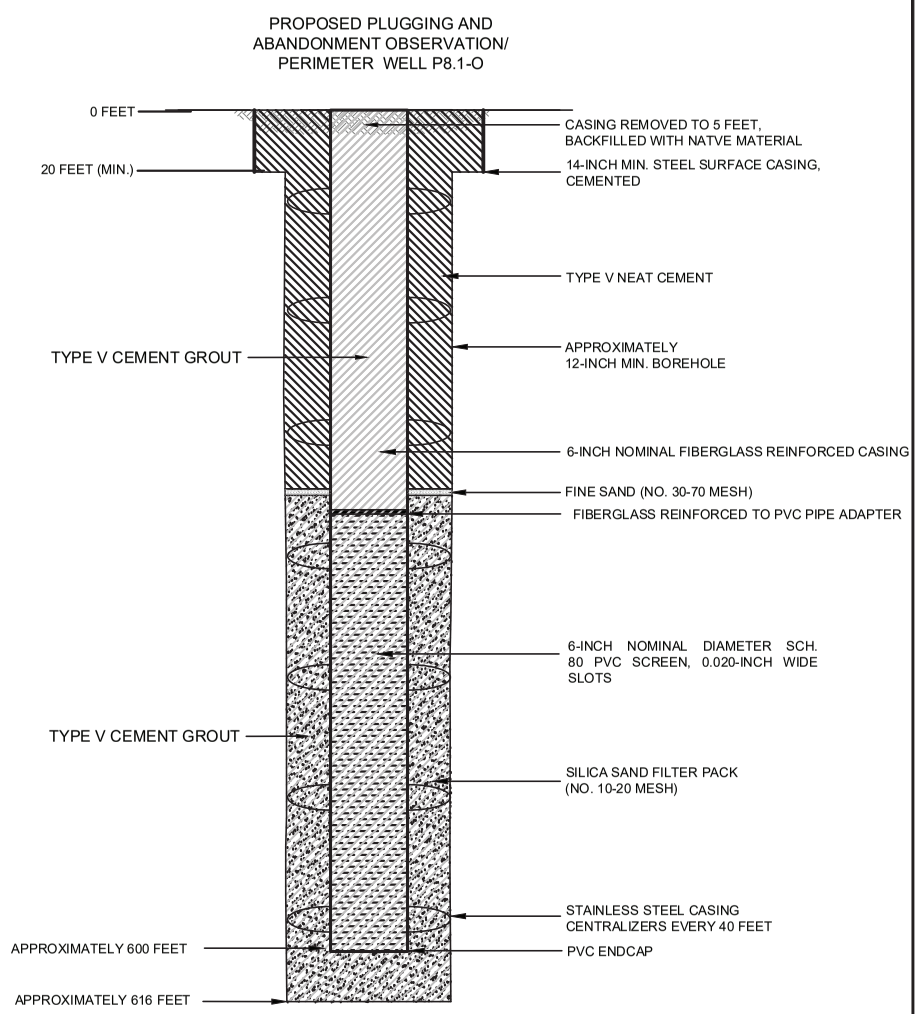

NOTES

1. WELL DESIGN DETAILS ARE BASED ON CORE HOLE AND WELL LOG RECORDS.

HALEY ALDRICH

FLORENCE COPPER, INC.
FLORENCE, ARIZONA

ABANDONMENT SCHEMATIC
OBSERVATION/PERIMETER
WELL P8.1-O

SEPTEMBER 2019
SCALE: AS SHOWN

FIGURE 1

OMB No. 2040-0042 Approval Expires 4/30/2022

United States Environmental Protection Agency

EPA

WELL REWORK RECORD, PLUGGING AND ABANDONMENT PLAN, OR PLUGGING AND ABANDONMENT AFFIDAVIT

Name and Address, Phone Number and/or Email of Permittee

Florence Copper Project
1575 W Hunt Hwy,
Florence, AZ 85132

Permit or EPA ID Number	API Number	Full Well Name
R9UIC-AZ3-FY11-1		P8-GU

State	County
Arizona	Pinal

Locate well in two directions from nearest lines of quarter section and drilling unit

Latitude 33.05220923

Longitude -111.4294184

Surface Location

NW **1/4 of** SE **1/4 of Section** 28 **Township** 4S **Range** 9E

_____ **ft. from (N/S)** _____ **Line of quarter section**

_____ **ft. from (E/W)** _____ **Line of quarter section.**

Well Class	Timing of Action (pick one)	Type of Action (pick one)
☐ Class I ☐ Class II ☑ Class III ☐ Class V	☑ Notice Prior to Work Date Expected to Commence March 2021 ☐ Report After Work Date Work Ended	☐ Well Rework ☑ Plugging and Abandonment ☐ Conversion to a Non-Injection Well

Provide a narrative description of the work planned to be performed, or that was performed. Use additional pages as necessary. See instructions.

A workover rig capable of performing the required abandonment operations at the required depths will be moved in and set up over the well. The well casing will be inspected to determine the depth to which the well remains open and if any obstructions are present in the casing; the presence and condition of any existing surface casing will also be documented. If necessary, the well casing will be cleaned out to the bottom of the deepest screen or perforation to enable placement of cement seals.

If surface casing is present, an attempt will be made to remove it. If removal of the surface casing is not feasible, it will be left in the hole and perforated as needed to allow an annular seal to be placed to a depth of at least 25 feet bgs. In areas of agricultural use, the surface casing will be cut at least 5 feet bgs and removed.

If the surface casing cannot be removed, it will be perforated from at least 20 feet below the bedrock-LBFU contact to at least 20 feet above the contact; from at least 20 feet below the base of the MFGU to at least 20 feet above the top of the MFGU; and from at least 25 feet bgs to 5 feet bgs.

A tremie pipe will be used to place Type V cement in the open well from the bottom of the well casing to the top of the well casing. Cement retainers, as described above, will be used to force cement grout into the annulus and behind perforated screen intervals, as necessary.

If the well casing has been obstructed, as much cement as possible will be placed from 100 feet below the LBFU-bedrock contact to the top of the casing.

The volume of Type V cement will be recorded and will not be less than the estimated volume of material required to fill each interval. All cement grout will consist of Type V cement, or equivalent approved in accordance with the UIC Permit.

Certification

I certify under the penalty of law that I have personally examined and am familiar with the information submitted in this document and all attachments and that, based on my inquiry of those individuals immediately responsible for obtaining the information, I believe that the information is true, accurate, and complete. I am aware that there are significant penalties for submitting false information, including the possibliity of fine and imprisonment. (Ref. 40 CFR § 144.32)

Name and Official Title *(Please type or print)*	Signature	Date Signed
Dan Johnson, VP - General Manager		10/3/2019

INSTRUCTIONS FOR FORM 7520-19

This form replaces forms 7520-12 and 7520-14. Use this form only when work is planned or has occurred that affects the well's construction or operation as an injection well, including work on the casing, tubing or packer (or for shallow Class V wells, the subsurface fluid emplacement network). Use one form per injection well. While reports or other information developed by contractors or service companies may be attached, this form must be signed by a responsible entity as described at 40 CFR 144.32. Note: operators closing Class V wells should use Form 7520-17.

NAME, ADDRESS, PHONE AND/OR EMAIL OF PERMITTEE: Enter the name and street address, city/town, state, and ZIP code of the permittee. Also provide an email address (if available) and/or a phone number.

PERMIT OR EPA ID NUMBER: Enter the well identification number or permit number assigned to the well by the EPA or the permitting authority.

API NUMBER: Enter the number assigned by the local jurisdiction (usually a State Oil and Gas Agency) using the American Petroleum Institute standard numbering system.

FULL WELL NAME: Enter the full name of the well or project.

Enter the **STATE** and **COUNTY** where the well is located. For States that do not have counties, use the name of that State's equivalent jurisdiction at a more local level.

WELL LOCATION: Fill in the complete township, range, and section to the nearest quarter-quarter section. A township is north or south of the baseline, and a range is east or west of the principal meridian (e.g., T12N, R34W). Also include the distance, in feet, from the nearest north or south line and nearest east or west line of the quarter-section. Also, enter the **latitude** and **longitude** of the well in decimal degrees, to five or six places if possible; be sure to include a negative sign for the longitude of a well in the Western Hemisphere and a negative sign for the latitude of a well in the Southern Hemisphere.

Enter the **WELL CLASS,** i.e., the class of injection well as defined in 40 CFR 144.6.

TIMING OF THE ACTION: Check ***Notice prior to work*** if the activity has not yet occurred (i.e., is planned). Check ***Report after work*** if the activity described has already occurred. As appropriate, include the date the activity is expected to start or the date the activity was completed. (Note this may not be available, e.g., for a plugging plan submitted with a permit application.)

TYPE OF ACTION: Check the appropriate box to describe the kind of activity being reported. Check ***Well Rework*** for work that was/will be performed on the well after it has already been in operation as an injection well. Check ***Plugging and Abandonment*** to report on plans for or descriptions of final closure/plugging after use as an injection well. Check ***Conversion to a Non-Injection Well*** if the well is to be converted to something other than an injection well.

Provide a **NARRATIVE DESCRIPTION** of the work planned to be performed, or that was performed. The narrative should include a description of the main procedures planned or that occurred during the work activity. A service company report, daily report, or similar document may be attached if it includes all the requested information and is clear and legible.

For well reworks, include the following information: The reason for the well rework; depths of activity; type of activity; changes to injection well configuration, well casing, or cement behind casing; any plug added to the well and its depth; any newly drilled interval and its depth; method(s) to demonstrate that the well has mechanical integrity (as applicable); and any deviations from the approved rework plan (as applicable).

For a well plugging plan, include the following information: Reason for the well plugging; number of plugs placed, and their depths; materials used as plugs (e.g., cast iron bridge plug, cement, cement retainer); method to set plugs; and wait-on-cement times, if any. Also provide one or more cost estimates from an independent firm in the business of plugging and abandoning wells to plug the well as described in the plan.

For well plugging affidavit, include the following information: Reason for the well plugging; number of plugs placed, and their depths; materials used as plugs (e.g., cast iron bridge plug, cement, cement retainer); method to set plugs; wait-on-cement times, if any; and any deviations from the approved plugging plan (if applicable).

For conversion to a non-injection well, include the following information: Depths of activity; type of activity; changes to injection well configuration, well casing, or cement behind casing; any plug added to the well and its depth; any newly drilled interval and its depth; depths of new perforations; and method(s) to demonstrate that the well has mechanical integrity (as applicable).

For all of the above activities, include a well sketch depicting the work, results of well tests/logging performed, service company tickets, and any other available information demonstrating how the work was/is to be performed. Also, specify whether depths are below ground surface, relative to Kelly bushing, etc.

CERTIFICATION: This form must be signed and dated by either: a responsible corporate officer for a corporation, by a general partner for a partnership, by the proprietor of a sole proprietorship, or by a principal executive or ranking elected official for a public agency.

PAPERWORK REDUCTION ACT NOTICE: The public reporting and recordkeeping burden for this collection of information is estimated to average between 6.0 and 7.9 hours per response, depending on the injection well class. Burden means the total time, effort, or financial resource expended by persons to generate, maintain, retain, or disclose or provide information to or for a Federal Agency. This includes the time needed to review instructions; develop, acquire, install, and utilize technology and systems for the purposes of collecting, validating, and verifying information, processing and maintaining information, and disclosing and providing information; adjust the existing ways to comply with any previously applicable instructions and requirements; train personnel to be able to respond to the collection of information; search data sources; complete and review the collection of information; and, transmit or otherwise disclose the information. An agency may not conduct or sponsor, and a person is not required to respond to, a collection of information unless it displays a currently valid OMB control number. Send comments on the Agency's need for this information, the accuracy of the provided burden estimates, and any suggested methods for minimizing respondent burden, including the use of automated collection techniques to Director, Collection Strategies Division, U.S. Environmental Protection Agency (2822), 1200 Pennsylvania Ave., NW., Washington, D.C. 20460. Include the OMB control number in any correspondence. Do not send the completed forms to this address.

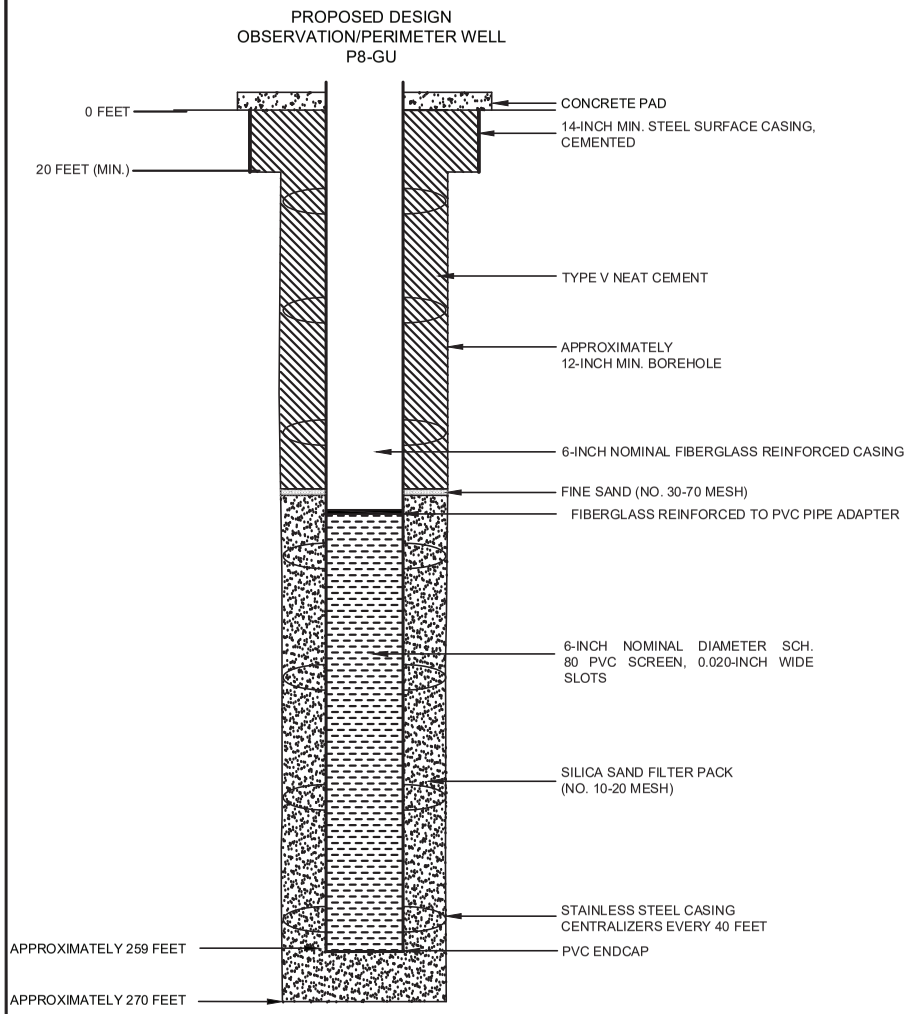

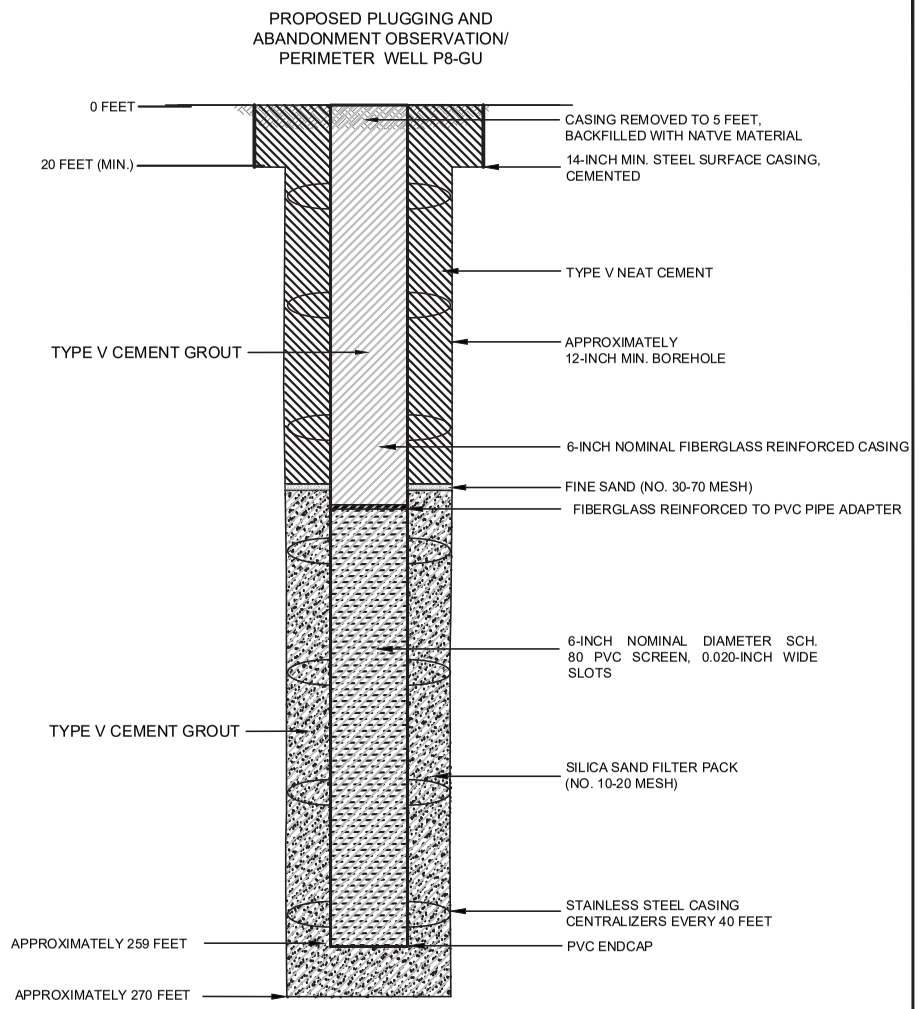

NOTES

1. WELL DESIGN DETAILS ARE BASED ON CORE HOLE AND WELL LOG RECORDS.

HALEY ALDRICH

FLORENCE COPPER, INC.
FLORENCE, ARIZONA

ABANDONMENT SCHEMATIC
OBSERVATION/PERIMETER
WELL P8-GU

SEPTEMBER 2019
SCALE: AS SHOWN

FIGURE 1

OMB No. 2040-0042 Approval Expires 4/30/2022

United States Environmental Protection Agency

WELL REWORK RECORD, PLUGGING AND ABANDONMENT PLAN, OR PLUGGING AND ABANDONMENT AFFIDAVIT

Name and Address, Phone Number and/or Email of Permittee

Florence Copper Project
1575 W Hunt Hwy,
Florence, AZ 85132

Permit or EPA ID Number	API Number	Full Well Name
R9UIC-AZ3-FY11-1		P8.2-O

State	County
Arizona	Pinal

Locate well in two directions from nearest lines of quarter section and drilling unit

Latitude 33.05212228

Longitude -111.4347703

Surface Location

NW **1/4 of** SE **1/4 of Section** 28 **Township** 4S **Range** 9E

_____ **ft. from (N/S)** _____ **Line of quarter section**

_____ **ft. from (E/W)** _____ **Line of quarter section.**

Well Class	Timing of Action (pick one)	Type of Action (pick one)
☐ Class I ☐ Class II ☑ Class III ☐ Class V	☑ Notice Prior to Work Date Expected to Commence March 2021 ☐ Report After Work Date Work Ended	☐ Well Rework ☑ Plugging and Abandonment ☐ Conversion to a Non-Injection Well

Provide a narrative description of the work planned to be performed, or that was performed. Use additional pages as necessary. See instructions.

A workover rig capable of performing the required abandonment operations at the required depths will be moved in and set up over the well. The well casing will be inspected to determine the depth to which the well remains open and if any obstructions are present in the casing; the presence and condition of any existing surface casing will also be documented. If necessary, the well casing will be cleaned out to the bottom of the deepest screen or perforation to enable placement of cement seals.

If surface casing is present, an attempt will be made to remove it. If removal of the surface casing is not feasible, it will be left in the hole and perforated as needed to allow an annular seal to be placed to a depth of at least 25 feet bgs. In areas of agricultural use, the surface casing will be cut at least 5 feet bgs and removed.

If the surface casing cannot be removed, it will be perforated from at least 20 feet below the bedrock-LBFU contact to at least 20 feet above the contact; from at least 20 feet below the base of the MFGU to at least 20 feet above the top of the MFGU; and from at least 25 feet bgs to 5 feet bgs.

A tremie pipe will be used to place Type V cement in the open well from the bottom of the well casing to the top of the well casing. Cement retainers, as described above, will be used to force cement grout into the annulus and behind perforated screen intervals, as necessary.

If the well casing has been obstructed, as much cement as possible will be placed from 100 feet below the LBFU-bedrock contact to the top of the casing.

The volume of Type V cement will be recorded and will not be less than the estimated volume of material required to fill each interval. All cement grout will consist of Type V cement, or equivalent approved in accordance with the UIC Permit.

Certification

I certify under the penalty of law that I have personally examined and am familiar with the information submitted in this document and all attachments and that, based on my inquiry of those individuals immediately responsible for obtaining the information, I believe that the information is true, accurate, and complete. I am aware that there are significant penalties for submitting false information, including the possibliity of fine and imprisonment. (Ref. 40 CFR § 144.32)

Name and Official Title *(Please type or print)*	Signature	Date Signed
Dan Johnson, VP - General Manager		10/3/2019

INSTRUCTIONS FOR FORM 7520-19

This form replaces forms 7520-12 and 7520-14. Use this form only when work is planned or has occurred that affects the well's construction or operation as an injection well, including work on the casing, tubing or packer (or for shallow Class V wells, the subsurface fluid emplacement network). Use one form per injection well. While reports or other information developed by contractors or service companies may be attached, this form must be signed by a responsible entity as described at 40 CFR 144.32. Note: operators closing Class V wells should use Form 7520-17.

NAME, ADDRESS, PHONE AND/OR EMAIL OF PERMITTEE: Enter the name and street address, city/town, state, and ZIP code of the permittee. Also provide an email address (if available) and/or a phone number.

PERMIT OR EPA ID NUMBER: Enter the well identification number or permit number assigned to the well by the EPA or the permitting authority.

API NUMBER: Enter the number assigned by the local jurisdiction (usually a State Oil and Gas Agency) using the American Petroleum Institute standard numbering system.

FULL WELL NAME: Enter the full name of the well or project.

Enter the **STATE** and **COUNTY** where the well is located. For States that do not have counties, use the name of that State's equivalent jurisdiction at a more local level.

WELL LOCATION: Fill in the complete township, range, and section to the nearest quarter-quarter section. A township is north or south of the baseline, and a range is east or west of the principal meridian (e.g., T12N, R34W). Also include the distance, in feet, from the nearest north or south line and nearest east or west line of the quarter-section. Also, enter the **latitude** and **longitude** of the well in decimal degrees, to five or six places if possible; be sure to include a negative sign for the longitude of a well in the Western Hemisphere and a negative sign for the latitude of a well in the Southern Hemisphere.

Enter the **WELL CLASS,** i.e., the class of injection well as defined in 40 CFR 144.6.

TIMING OF THE ACTION: Check ***Notice prior to work*** if the activity has not yet occurred (i.e., is planned). Check ***Report after work*** if the activity described has already occurred. As appropriate, include the date the activity is expected to start or the date the activity was completed. (Note this may not be available, e.g., for a plugging plan submitted with a permit application.)

TYPE OF ACTION: Check the appropriate box to describe the kind of activity being reported. Check ***Well Rework*** for work that was/will be performed on the well after it has already been in operation as an injection well. Check ***Plugging and Abandonment*** to report on plans for or descriptions of final closure/plugging after use as an injection well. Check ***Conversion to a Non-Injection Well*** if the well is to be converted to something other than an injection well.

Provide a **NARRATIVE DESCRIPTION** of the work planned to be performed, or that was performed. The narrative should include a description of the main procedures planned or that occurred during the work activity. A service company report, daily report, or similar document may be attached if it includes all the requested information and is clear and legible.

For well reworks, include the following information: The reason for the well rework; depths of activity; type of activity; changes to injection well configuration, well casing, or cement behind casing; any plug added to the well and its depth; any newly drilled interval and its depth; method(s) to demonstrate that the well has mechanical integrity (as applicable); and any deviations from the approved rework plan (as applicable).

For a well plugging plan, include the following information: Reason for the well plugging; number of plugs placed, and their depths; materials used as plugs (e.g., cast iron bridge plug, cement, cement retainer); method to set plugs; and wait-on-cement times, if any. Also provide one or more cost estimates from an independent firm in the business of plugging and abandoning wells to plug the well as described in the plan.

For well plugging affidavit, include the following information: Reason for the well plugging; number of plugs placed, and their depths; materials used as plugs (e.g., cast iron bridge plug, cement, cement retainer); method to set plugs; wait-on-cement times, if any; and any deviations from the approved plugging plan (if applicable).

For conversion to a non-injection well, include the following information: Depths of activity; type of activity; changes to injection well configuration, well casing, or cement behind casing; any plug added to the well and its depth; any newly drilled interval and its depth; depths of new perforations; and method(s) to demonstrate that the well has mechanical integrity (as applicable).

For all of the above activities, include a well sketch depicting the work, results of well tests/logging performed, service company tickets, and any other available information demonstrating how the work was/is to be performed. Also, specify whether depths are below ground surface, relative to Kelly bushing, etc.

CERTIFICATION: This form must be signed and dated by either: a responsible corporate officer for a corporation, by a general partner for a partnership, by the proprietor of a sole proprietorship, or by a principal executive or ranking elected official for a public agency.

PAPERWORK REDUCTION ACT NOTICE: The public reporting and recordkeeping burden for this collection of information is estimated to average between 6.0 and 7.9 hours per response, depending on the injection well class. Burden means the total time, effort, or financial resource expended by persons to generate, maintain, retain, or disclose or provide information to or for a Federal Agency. This includes the time needed to review instructions; develop, acquire, install, and utilize technology and systems for the purposes of collecting, validating, and verifying information, processing and maintaining information, and disclosing and providing information; adjust the existing ways to comply with any previously applicable instructions and requirements; train personnel to be able to respond to the collection of information; search data sources; complete and review the collection of information; and, transmit or otherwise disclose the information. An agency may not conduct or sponsor, and a person is not required to respond to, a collection of information unless it displays a currently valid OMB control number. Send comments on the Agency's need for this information, the accuracy of the provided burden estimates, and any suggested methods for minimizing respondent burden, including the use of automated collection techniques to Director, Collection Strategies Division, U.S. Environmental Protection Agency (2822), 1200 Pennsylvania Ave., NW., Washington, D.C. 20460. Include the OMB control number in any correspondence. Do not send the completed forms to this address.

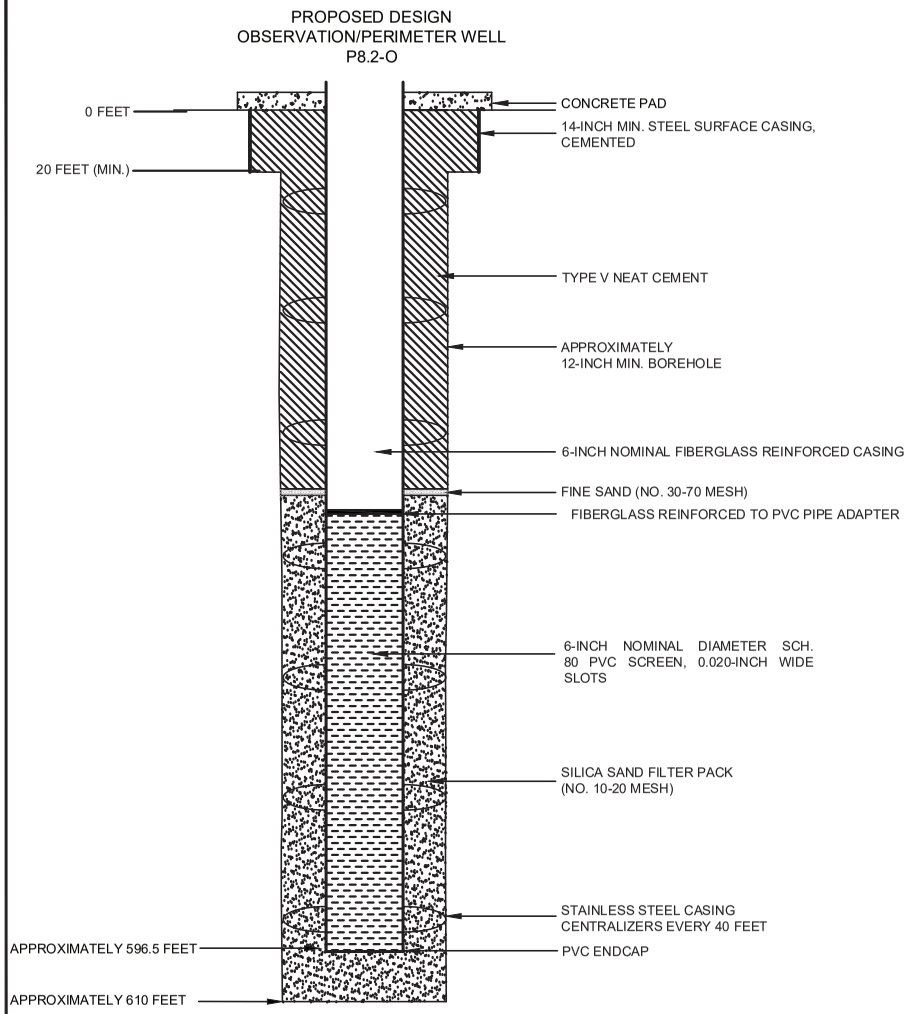

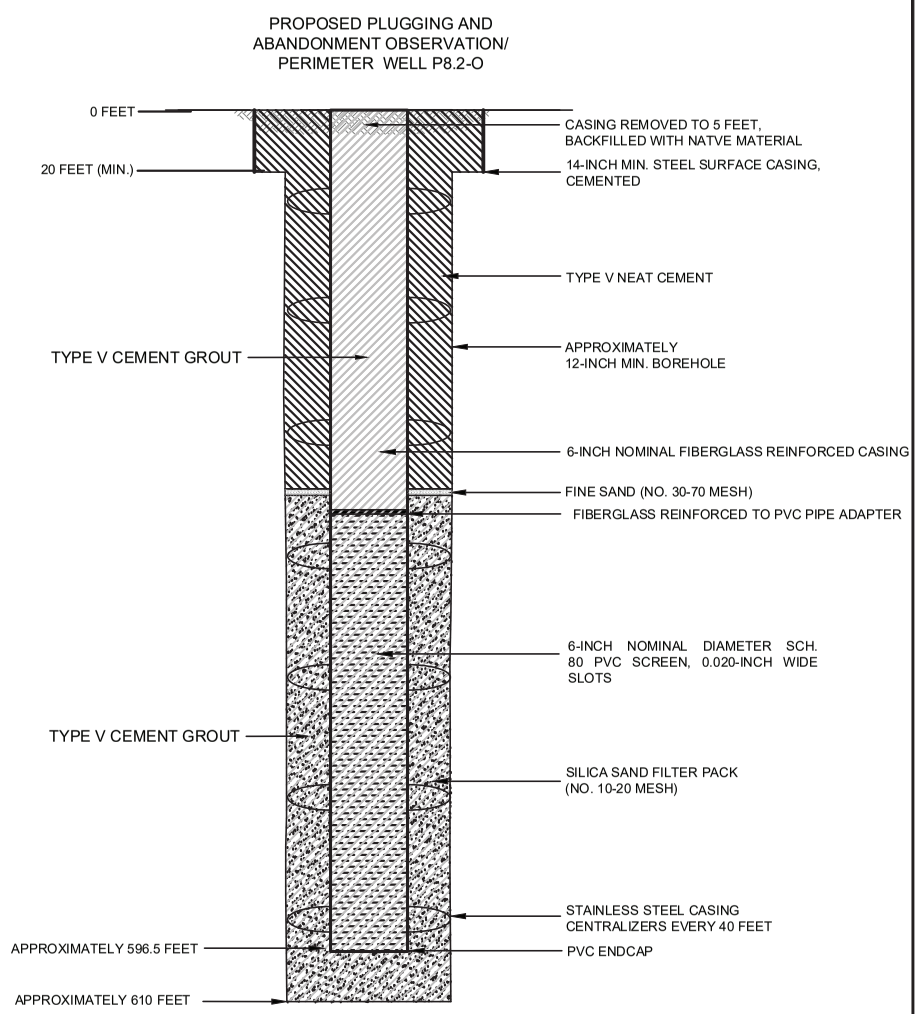

NOTES

1. WELL DESIGN DETAILS ARE BASED ON CORE HOLE AND WELL LOG RECORDS.

HALEY ALDRICH

FLORENCE COPPER, INC.
FLORENCE, ARIZONA

ABANDONMENT SCHEMATIC
OBSERVATION/PERIMETER
WELL P8.2-O

SEPTEMBER 2019
SCALE: AS SHOWN

FIGURE 1

OMB No. 2040-0042 Approval Expires 4/30/2022

United States Environmental Protection Agency

WELL REWORK RECORD, PLUGGING AND ABANDONMENT PLAN, OR PLUGGING AND ABANDONMENT AFFIDAVIT

Name and Address, Phone Number and/or Email of Permittee

Florence Copper Project
1575 W Hunt Hwy,
Florence, AZ 85132

Permit or EPA ID Number	API Number	Full Well Name
R9UIC-AZ3-FY11-1		P12-O

State	County
Arizona	Pinal

Locate well in two directions from nearest lines of quarter section and drilling unit

Latitude 33.04634187

Surface Location

SE **1/4 of** SW **1/4 of Section** 28 **Township** 4S **Range** 9E

Longitude -111.4321274

_____ **ft. from (N/S)** _____ **Line of quarter section**

_____ **ft. from (E/W)** _____ **Line of quarter section.**

Well Class	Timing of Action (pick one)	Type of Action (pick one)
☐ Class I ☐ Class II ☑ Class III ☐ Class V	☑ Notice Prior to Work Date Expected to Commence March 2021 ☐ Report After Work Date Work Ended	☐ Well Rework ☑ Plugging and Abandonment ☐ Conversion to a Non-Injection Well

Provide a narrative description of the work planned to be performed, or that was performed. Use additional pages as necessary. See instructions.

A workover rig capable of performing the required abandonment operations at the required depths will be moved in and set up over the well. The well casing will be inspected to determine the depth to which the well remains open and if any obstructions are present in the casing; the presence and condition of any existing surface casing will also be documented. If necessary, the well casing will be cleaned out to the bottom of the deepest screen or perforation to enable placement of cement seals.

If surface casing is present, an attempt will be made to remove it. If removal of the surface casing is not feasible, it will be left in the hole and perforated as needed to allow an annular seal to be placed to a depth of at least 25 feet bgs. In areas of agricultural use, the surface casing will be cut at least 5 feet bgs and removed.

If the surface casing cannot be removed, it will be perforated from at least 20 feet below the bedrock-LBFU contact to at least 20 feet above the contact; from at least 20 feet below the base of the MFGU to at least 20 feet above the top of the MFGU; and from at least 25 feet bgs to 5 feet bgs.

A tremie pipe will be used to place Type V cement in the open well from the bottom of the well casing to the top of the well casing. Cement retainers, as described above, will be used to force cement grout into the annulus and behind perforated screen intervals, as necessary.

If the well casing has been obstructed, as much cement as possible will be placed from 100 feet below the LBFU-bedrock contact to the top of the casing.

The volume of Type V cement will be recorded and will not be less than the estimated volume of material required to fill each interval. All cement grout will consist of Type V cement, or equivalent approved in accordance with the UIC Permit.

Certification

I certify under the penalty of law that I have personally examined and am familiar with the information submitted in this document and all attachments and that, based on my inquiry of those individuals immediately responsible for obtaining the information, I believe that the information is true, accurate, and complete. I am aware that there are significant penalties for submitting false information, including the possibliity of fine and imprisonment. (Ref. 40 CFR § 144.32)

Name and Official Title *(Please type or print)*	Signature	Date Signed
Dan Johnson, VP - General Manager		10/3/2019

INSTRUCTIONS FOR FORM 7520-19

This form replaces forms 7520-12 and 7520-14. Use this form only when work is planned or has occurred that affects the well's construction or operation as an injection well, including work on the casing, tubing or packer (or for shallow Class V wells, the subsurface fluid emplacement network). Use one form per injection well. While reports or other information developed by contractors or service companies may be attached, this form must be signed by a responsible entity as described at 40 CFR 144.32. Note: operators closing Class V wells should use Form 7520-17.

NAME, ADDRESS, PHONE AND/OR EMAIL OF PERMITTEE: Enter the name and street address, city/town, state, and ZIP code of the permittee. Also provide an email address (if available) and/or a phone number.

PERMIT OR EPA ID NUMBER: Enter the well identification number or permit number assigned to the well by the EPA or the permitting authority.

API NUMBER: Enter the number assigned by the local jurisdiction (usually a State Oil and Gas Agency) using the American Petroleum Institute standard numbering system.

FULL WELL NAME: Enter the full name of the well or project.

Enter the **STATE** and **COUNTY** where the well is located. For States that do not have counties, use the name of that State's equivalent jurisdiction at a more local level.

WELL LOCATION: Fill in the complete township, range, and section to the nearest quarter-quarter section. A township is north or south of the baseline, and a range is east or west of the principal meridian (e.g., T12N, R34W). Also include the distance, in feet, from the nearest north or south line and nearest east or west line of the quarter-section. Also, enter the **latitude** and **longitude** of the well in decimal degrees, to five or six places if possible; be sure to include a negative sign for the longitude of a well in the Western Hemisphere and a negative sign for the latitude of a well in the Southern Hemisphere.

Enter the **WELL CLASS,** i.e., the class of injection well as defined in 40 CFR 144.6.

TIMING OF THE ACTION: Check ***Notice prior to work*** if the activity has not yet occurred (i.e., is planned). Check ***Report after work*** if the activity described has already occurred. As appropriate, include the date the activity is expected to start or the date the activity was completed. (Note this may not be available, e.g., for a plugging plan submitted with a permit application.)

TYPE OF ACTION: Check the appropriate box to describe the kind of activity being reported. Check ***Well Rework*** for work that was/will be performed on the well after it has already been in operation as an injection well. Check ***Plugging and Abandonment*** to report on plans for or descriptions of final closure/plugging after use as an injection well. Check ***Conversion to a Non-Injection Well*** if the well is to be converted to something other than an injection well.

Provide a **NARRATIVE DESCRIPTION** of the work planned to be performed, or that was performed. The narrative should include a description of the main procedures planned or that occurred during the work activity. A service company report, daily report, or similar document may be attached if it includes all the requested information and is clear and legible.

For well reworks, include the following information: The reason for the well rework; depths of activity; type of activity; changes to injection well configuration, well casing, or cement behind casing; any plug added to the well and its depth; any newly drilled interval and its depth; method(s) to demonstrate that the well has mechanical integrity (as applicable); and any deviations from the approved rework plan (as applicable).

For a well plugging plan, include the following information: Reason for the well plugging; number of plugs placed, and their depths; materials used as plugs (e.g., cast iron bridge plug, cement, cement retainer); method to set plugs; and wait-on-cement times, if any. Also provide one or more cost estimates from an independent firm in the business of plugging and abandoning wells to plug the well as described in the plan.

For well plugging affidavit, include the following information: Reason for the well plugging; number of plugs placed, and their depths; materials used as plugs (e.g., cast iron bridge plug, cement, cement retainer); method to set plugs; wait-on-cement times, if any; and any deviations from the approved plugging plan (if applicable).

For conversion to a non-injection well, include the following information: Depths of activity; type of activity; changes to injection well configuration, well casing, or cement behind casing; any plug added to the well and its depth; any newly drilled interval and its depth; depths of new perforations; and method(s) to demonstrate that the well has mechanical integrity (as applicable).

For all of the above activities, include a well sketch depicting the work, results of well tests/logging performed, service company tickets, and any other available information demonstrating how the work was/is to be performed. Also, specify whether depths are below ground surface, relative to Kelly bushing, etc.

CERTIFICATION: This form must be signed and dated by either: a responsible corporate officer for a corporation, by a general partner for a partnership, by the proprietor of a sole proprietorship, or by a principal executive or ranking elected official for a public agency.

PAPERWORK REDUCTION ACT NOTICE: The public reporting and recordkeeping burden for this collection of information is estimated to average between 6.0 and 7.9 hours per response, depending on the injection well class. Burden means the total time, effort, or financial resource expended by persons to generate, maintain, retain, or disclose or provide information to or for a Federal Agency. This includes the time needed to review instructions; develop, acquire, install, and utilize technology and systems for the purposes of collecting, validating, and verifying information, processing and maintaining information, and disclosing and providing information; adjust the existing ways to comply with any previously applicable instructions and requirements; train personnel to be able to respond to the collection of information; search data sources; complete and review the collection of information; and, transmit or otherwise disclose the information. An agency may not conduct or sponsor, and a person is not required to respond to, a collection of information unless it displays a currently valid OMB control number. Send comments on the Agency's need for this information, the accuracy of the provided burden estimates, and any suggested methods for minimizing respondent burden, including the use of automated collection techniques to Director, Collection Strategies Division, U.S. Environmental Protection Agency (2822), 1200 Pennsylvania Ave., NW., Washington, D.C. 20460. Include the OMB control number in any correspondence. Do not send the completed forms to this address.

Saved by: MNICHOLLS Printed: 7/25/2019 7:20 PM Sheet: HA-FIG-A-L(2)
\\HALEYALDRICH.COM\SHARE\PHX_COMMON\PROJECTS\FLORENCE COPPER\132473 FLORENCE GROUNDWATER PERMITTING\CAD\132473_000-OBSERVATION_WELL_CONSTRUCTION DIAGRAM.DWG

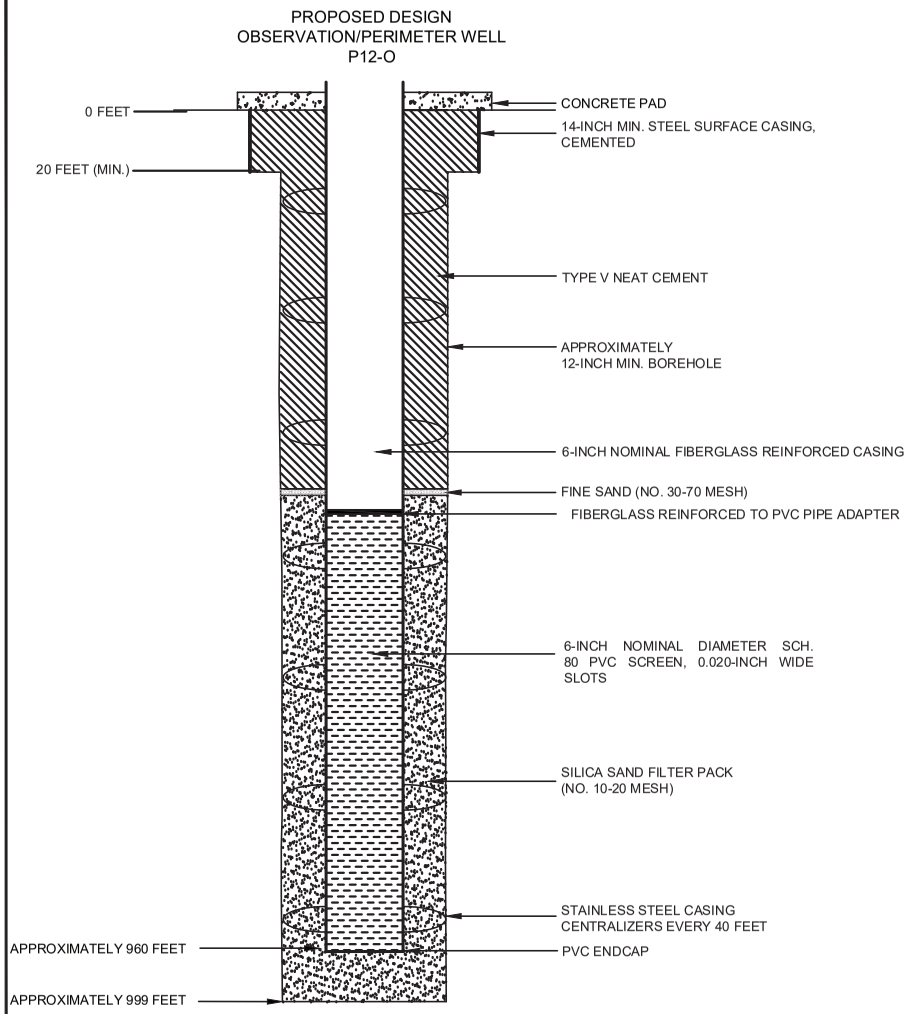

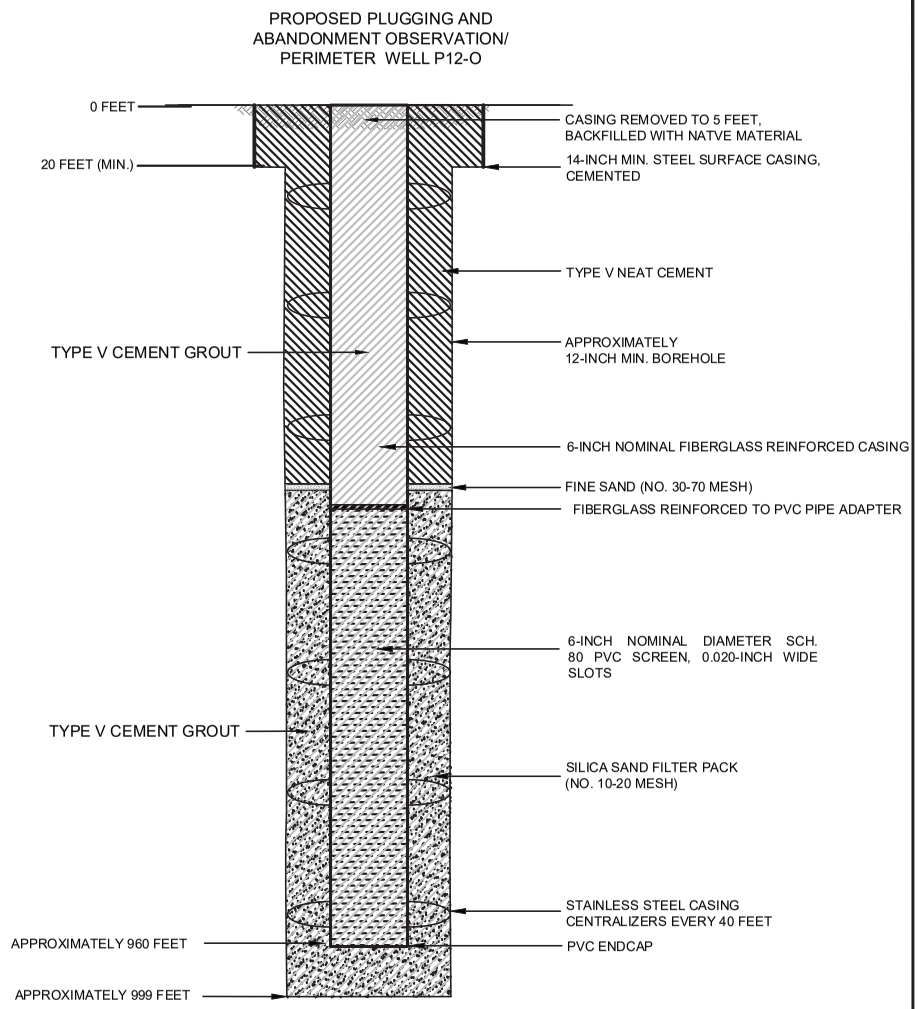

NOTES

1. WELL DESIGN DETAILS ARE BASED ON CORE HOLE AND WELL LOG RECORDS.

HALEY ALDRICH

FLORENCE COPPER, INC.
FLORENCE, ARIZONA

ABANDONMENT SCHEMATIC
OBSERVATION/PERIMETER
WELL P12-O

SEPTEMBER 2019
SCALE: AS SHOWN

FIGURE 1

OMB No. 2040-0042 Approval Expires 4/30/2022

United States Environmental Protection Agency

WELL REWORK RECORD, PLUGGING AND ABANDONMENT PLAN, OR PLUGGING AND ABANDONMENT AFFIDAVIT

Name and Address, Phone Number and/or Email of Permittee

Florence Copper Project
1575 W Hunt Hwy,
Florence, AZ 85132

Permit or EPA ID Number	API Number	Full Well Name
R9UIC-AZ3-FY11-1		P13.1-O

State	County
Arizona	Pinal

Locate well in two directions from nearest lines of quarter section and drilling unit

Latitude 33.05210103

Surface Location

NW **1/4 of** SW **1/4 of Section** 28 **Township** 4S **Range** 9E

Longitude -111.4351053

_____ **ft. from (N/S)** _____ **Line of quarter section**

_____ **ft. from (E/W)** _____ **Line of quarter section.**

Well Class	Timing of Action (pick one)	Type of Action (pick one)
☐ Class I ☐ Class II ☑ Class III ☐ Class V	☑ Notice Prior to Work Date Expected to Commence March 2021 ☐ Report After Work Date Work Ended	☐ Well Rework ☑ Plugging and Abandonment ☐ Conversion to a Non-Injection Well

Provide a narrative description of the work planned to be performed, or that was performed. Use additional pages as necessary. See instructions.

A workover rig capable of performing the required abandonment operations at the required depths will be moved in and set up over the well. The well casing will be inspected to determine the depth to which the well remains open and if any obstructions are present in the casing; the presence and condition of any existing surface casing will also be documented. If necessary, the well casing will be cleaned out to the bottom of the deepest screen or perforation to enable placement of cement seals.

If surface casing is present, an attempt will be made to remove it. If removal of the surface casing is not feasible, it will be left in the hole and perforated as needed to allow an annular seal to be placed to a depth of at least 25 feet bgs. In areas of agricultural use, the surface casing will be cut at least 5 feet bgs and removed.

If the surface casing cannot be removed, it will be perforated from at least 20 feet below the bedrock-LBFU contact to at least 20 feet above the contact; from at least 20 feet below the base of the MFGU to at least 20 feet above the top of the MFGU; and from at least 25 feet bgs to 5 feet bgs.

A tremie pipe will be used to place Type V cement in the open well from the bottom of the well casing to the top of the well casing. Cement retainers, as described above, will be used to force cement grout into the annulus and behind perforated screen intervals, as necessary.

If the well casing has been obstructed, as much cement as possible will be placed from 100 feet below the LBFU-bedrock contact to the top of the casing.

The volume of Type V cement will be recorded and will not be less than the estimated volume of material required to fill each interval. All cement grout will consist of Type V cement, or equivalent approved in accordance with the UIC Permit.

Certification

I certify under the penalty of law that I have personally examined and am familiar with the information submitted in this document and all attachments and that, based on my inquiry of those individuals immediately responsible for obtaining the information, I believe that the information is true, accurate, and complete. I am aware that there are significant penalties for submitting false information, including the possibliity of fine and imprisonment. (Ref. 40 CFR § 144.32)

Name and Official Title *(Please type or print)*	Signature	Date Signed
Dan Johnson, VP - General Manager		10/3/2019

INSTRUCTIONS FOR FORM 7520-19

This form replaces forms 7520-12 and 7520-14. Use this form only when work is planned or has occurred that affects the well's construction or operation as an injection well, including work on the casing, tubing or packer (or for shallow Class V wells, the subsurface fluid emplacement network). Use one form per injection well. While reports or other information developed by contractors or service companies may be attached, this form must be signed by a responsible entity as described at 40 CFR 144.32. Note: operators closing Class V wells should use Form 7520-17.

NAME, ADDRESS, PHONE AND/OR EMAIL OF PERMITTEE: Enter the name and street address, city/town, state, and ZIP code of the permittee. Also provide an email address (if available) and/or a phone number.

PERMIT OR EPA ID NUMBER: Enter the well identification number or permit number assigned to the well by the EPA or the permitting authority.

API NUMBER: Enter the number assigned by the local jurisdiction (usually a State Oil and Gas Agency) using the American Petroleum Institute standard numbering system.

FULL WELL NAME: Enter the full name of the well or project.

Enter the **STATE** and **COUNTY** where the well is located. For States that do not have counties, use the name of that State's equivalent jurisdiction at a more local level.

WELL LOCATION: Fill in the complete township, range, and section to the nearest quarter-quarter section. A township is north or south of the baseline, and a range is east or west of the principal meridian (e.g., T12N, R34W). Also include the distance, in feet, from the nearest north or south line and nearest east or west line of the quarter-section. Also, enter the **latitude** and **longitude** of the well in decimal degrees, to five or six places if possible; be sure to include a negative sign for the longitude of a well in the Western Hemisphere and a negative sign for the latitude of a well in the Southern Hemisphere.

Enter the **WELL CLASS,** i.e., the class of injection well as defined in 40 CFR 144.6.

TIMING OF THE ACTION: Check ***Notice prior to work*** if the activity has not yet occurred (i.e., is planned). Check ***Report after work*** if the activity described has already occurred. As appropriate, include the date the activity is expected to start or the date the activity was completed. (Note this may not be available, e.g., for a plugging plan submitted with a permit application.)

TYPE OF ACTION: Check the appropriate box to describe the kind of activity being reported. Check ***Well Rework*** for work that was/will be performed on the well after it has already been in operation as an injection well. Check ***Plugging and Abandonment*** to report on plans for or descriptions of final closure/plugging after use as an injection well. Check ***Conversion to a Non-Injection Well*** if the well is to be converted to something other than an injection well.

Provide a **NARRATIVE DESCRIPTION** of the work planned to be performed, or that was performed. The narrative should include a description of the main procedures planned or that occurred during the work activity. A service company report, daily report, or similar document may be attached if it includes all the requested information and is clear and legible.

For well reworks, include the following information: The reason for the well rework; depths of activity; type of activity; changes to injection well configuration, well casing, or cement behind casing; any plug added to the well and its depth; any newly drilled interval and its depth; method(s) to demonstrate that the well has mechanical integrity (as applicable); and any deviations from the approved rework plan (as applicable).

For a well plugging plan, include the following information: Reason for the well plugging; number of plugs placed, and their depths; materials used as plugs (e.g., cast iron bridge plug, cement, cement retainer); method to set plugs; and wait-on-cement times, if any. Also provide one or more cost estimates from an independent firm in the business of plugging and abandoning wells to plug the well as described in the plan.

For well plugging affidavit, include the following information: Reason for the well plugging; number of plugs placed, and their depths; materials used as plugs (e.g., cast iron bridge plug, cement, cement retainer); method to set plugs; wait-on-cement times, if any; and any deviations from the approved plugging plan (if applicable).

For conversion to a non-injection well, include the following information: Depths of activity; type of activity; changes to injection well configuration, well casing, or cement behind casing; any plug added to the well and its depth; any newly drilled interval and its depth; depths of new perforations; and method(s) to demonstrate that the well has mechanical integrity (as applicable).

For all of the above activities, include a well sketch depicting the work, results of well tests/logging performed, service company tickets, and any other available information demonstrating how the work was/is to be performed. Also, specify whether depths are below ground surface, relative to Kelly bushing, etc.

CERTIFICATION: This form must be signed and dated by either: a responsible corporate officer for a corporation, by a general partner for a partnership, by the proprietor of a sole proprietorship, or by a principal executive or ranking elected official for a public agency.

PAPERWORK REDUCTION ACT NOTICE: The public reporting and recordkeeping burden for this collection of information is estimated to average between 6.0 and 7.9 hours per response, depending on the injection well class. Burden means the total time, effort, or financial resource expended by persons to generate, maintain, retain, or disclose or provide information to or for a Federal Agency. This includes the time needed to review instructions; develop, acquire, install, and utilize technology and systems for the purposes of collecting, validating, and verifying information, processing and maintaining information, and disclosing and providing information; adjust the existing ways to comply with any previously applicable instructions and requirements; train personnel to be able to respond to the collection of information; search data sources; complete and review the collection of information; and, transmit or otherwise disclose the information. An agency may not conduct or sponsor, and a person is not required to respond to, a collection of information unless it displays a currently valid OMB control number. Send comments on the Agency's need for this information, the accuracy of the provided burden estimates, and any suggested methods for minimizing respondent burden, including the use of automated collection techniques to Director, Collection Strategies Division, U.S. Environmental Protection Agency (2822), 1200 Pennsylvania Ave., NW., Washington, D.C. 20460. Include the OMB control number in any correspondence. Do not send the completed forms to this address.

Saved by: MNICHOLLS Printed: 7/25/2019 7:20 PM Sheet: HA-FIG-A-L(2)
\\HALEYALDRICH.COM\SHARE\PHX_COMMON\PROJECTS\FLORENCE COPPER\132473 FLORENCE GROUNDWATER PERMITTING\CAD\132473_000-OBSERVATION_WELL_CONSTRUCTION DIAGRAM.DWG

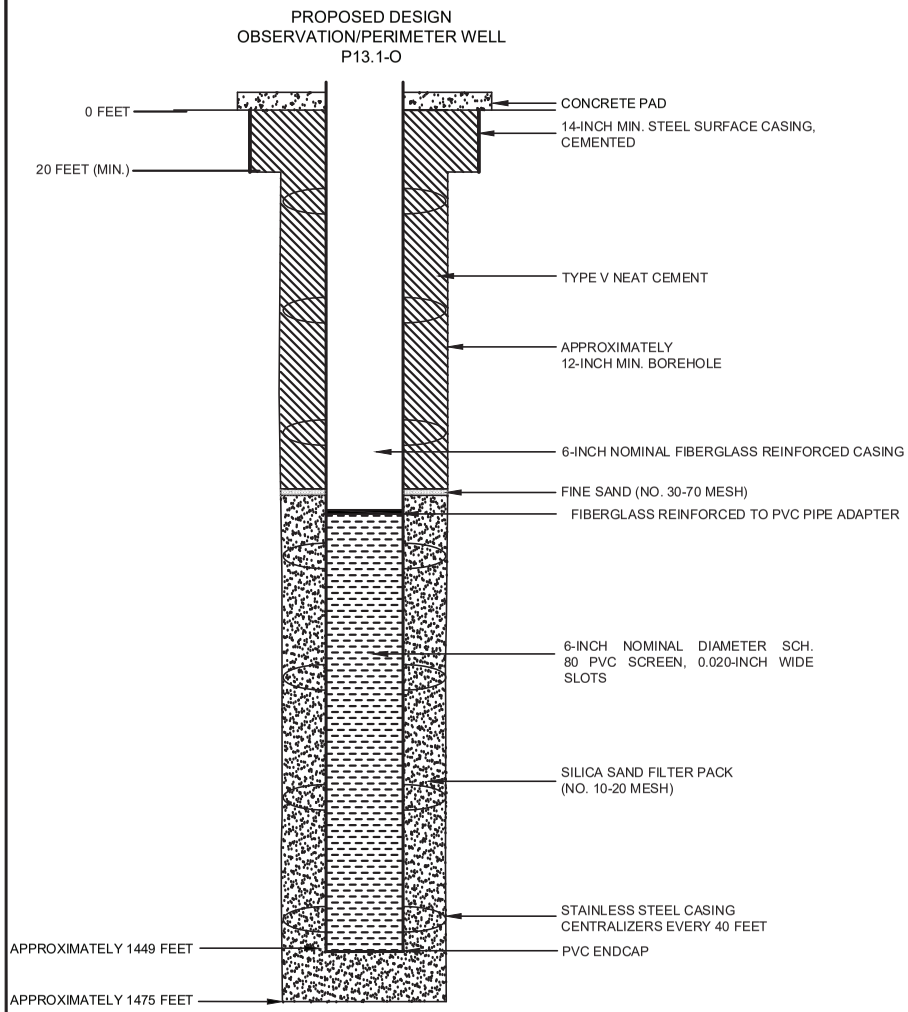

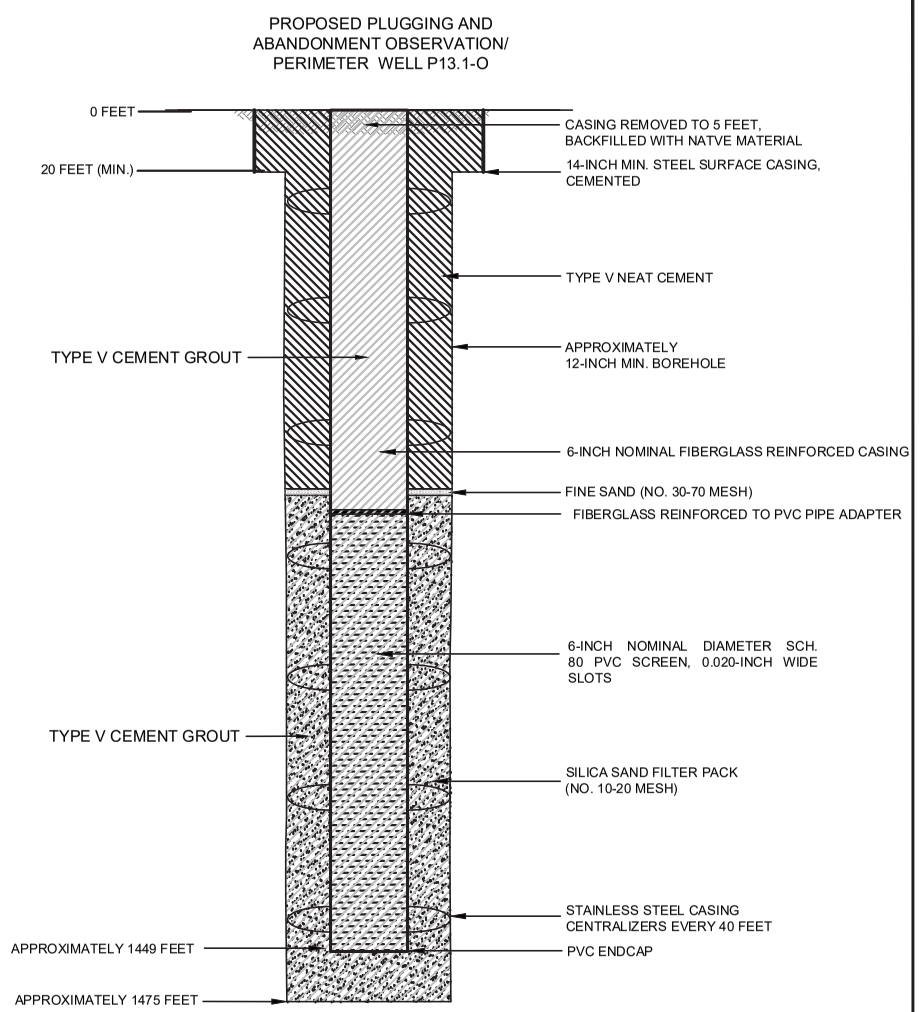

NOTES

1. WELL DESIGN DETAILS ARE BASED ON CORE HOLE AND WELL LOG RECORDS.

HALEY ALDRICH

FLORENCE COPPER, INC.
FLORENCE, ARIZONA

ABANDONMENT SCHEMATIC
OBSERVATION/PERIMETER
WELL P13.1-O

SEPTEMBER 2019
SCALE: AS SHOWN

FIGURE 1

OMB No. 2040-0042 Approval Expires 4/30/2022

United States Environmental Protection Agency

WELL REWORK RECORD, PLUGGING AND ABANDONMENT PLAN, OR PLUGGING AND ABANDONMENT AFFIDAVIT

Name and Address, Phone Number and/or Email of Permittee

Florence Copper Project
1575 W Hunt Hwy,
Florence, AZ 85132

Permit or EPA ID Number	API Number	Full Well Name
R9UIC-AZ3-FY11-1		P13.2-O

State	County
Arizona	Pinal

Locate well in two directions from nearest lines of quarter section and drilling unit

Latitude 33.05212228

Surface Location

NW **1/4 of** SW **1/4 of Section** 28 **Township** 4S **Range** 9E

Longitude -111.4347703

_____ **ft. from (N/S)** _____ **Line of quarter section**

_____ **ft. from (E/W)** _____ **Line of quarter section.**

Well Class	Timing of Action (pick one)	Type of Action (pick one)
☐ Class I ☐ Class II ☑ Class III ☐ Class V	☑ Notice Prior to Work Date Expected to Commence March 2021 ☐ Report After Work Date Work Ended	☐ Well Rework ☑ Plugging and Abandonment ☐ Conversion to a Non-Injection Well

Provide a narrative description of the work planned to be performed, or that was performed. Use additional pages as necessary. See instructions.

A workover rig capable of performing the required abandonment operations at the required depths will be moved in and set up over the well. The well casing will be inspected to determine the depth to which the well remains open and if any obstructions are present in the casing; the presence and condition of any existing surface casing will also be documented. If necessary, the well casing will be cleaned out to the bottom of the deepest screen or perforation to enable placement of cement seals.

If surface casing is present, an attempt will be made to remove it. If removal of the surface casing is not feasible, it will be left in the hole and perforated as needed to allow an annular seal to be placed to a depth of at least 25 feet bgs. In areas of agricultural use, the surface casing will be cut at least 5 feet bgs and removed.

If the surface casing cannot be removed, it will be perforated from at least 20 feet below the bedrock-LBFU contact to at least 20 feet above the contact; from at least 20 feet below the base of the MFGU to at least 20 feet above the top of the MFGU; and from at least 25 feet bgs to 5 feet bgs.

A tremie pipe will be used to place Type V cement in the open well from the bottom of the well casing to the top of the well casing. Cement retainers, as described above, will be used to force cement grout into the annulus and behind perforated screen intervals, as necessary.

If the well casing has been obstructed, as much cement as possible will be placed from 100 feet below the LBFU-bedrock contact to the top of the casing.

The volume of Type V cement will be recorded and will not be less than the estimated volume of material required to fill each interval. All cement grout will consist of Type V cement, or equivalent approved in accordance with the UIC Permit.

Certification

I certify under the penalty of law that I have personally examined and am familiar with the information submitted in this document and all attachments and that, based on my inquiry of those individuals immediately responsible for obtaining the information, I believe that the information is true, accurate, and complete. I am aware that there are significant penalties for submitting false information, including the possibliity of fine and imprisonment. (Ref. 40 CFR § 144.32)

Name and Official Title *(Please type or print)*	Signature	Date Signed
Dan Johnson, VP - General Manager		10/3/2019

INSTRUCTIONS FOR FORM 7520-19

This form replaces forms 7520-12 and 7520-14. Use this form only when work is planned or has occurred that affects the well's construction or operation as an injection well, including work on the casing, tubing or packer (or for shallow Class V wells, the subsurface fluid emplacement network). Use one form per injection well. While reports or other information developed by contractors or service companies may be attached, this form must be signed by a responsible entity as described at 40 CFR 144.32. Note: operators closing Class V wells should use Form 7520-17.

NAME, ADDRESS, PHONE AND/OR EMAIL OF PERMITTEE: Enter the name and street address, city/town, state, and ZIP code of the permittee. Also provide an email address (if available) and/or a phone number.

PERMIT OR EPA ID NUMBER: Enter the well identification number or permit number assigned to the well by the EPA or the permitting authority.

API NUMBER: Enter the number assigned by the local jurisdiction (usually a State Oil and Gas Agency) using the American Petroleum Institute standard numbering system.

FULL WELL NAME: Enter the full name of the well or project.

Enter the **STATE** and **COUNTY** where the well is located. For States that do not have counties, use the name of that State's equivalent jurisdiction at a more local level.

WELL LOCATION: Fill in the complete township, range, and section to the nearest quarter-quarter section. A township is north or south of the baseline, and a range is east or west of the principal meridian (e.g., T12N, R34W). Also include the distance, in feet, from the nearest north or south line and nearest east or west line of the quarter-section. Also, enter the **latitude** and **longitude** of the well in decimal degrees, to five or six places if possible; be sure to include a negative sign for the longitude of a well in the Western Hemisphere and a negative sign for the latitude of a well in the Southern Hemisphere.

Enter the **WELL CLASS,** i.e., the class of injection well as defined in 40 CFR 144.6.

TIMING OF THE ACTION: Check ***Notice prior to work*** if the activity has not yet occurred (i.e., is planned). Check ***Report after work*** if the activity described has already occurred. As appropriate, include the date the activity is expected to start or the date the activity was completed. (Note this may not be available, e.g., for a plugging plan submitted with a permit application.)

TYPE OF ACTION: Check the appropriate box to describe the kind of activity being reported. Check ***Well Rework*** for work that was/will be performed on the well after it has already been in operation as an injection well. Check ***Plugging and Abandonment*** to report on plans for or descriptions of final closure/plugging after use as an injection well. Check ***Conversion to a Non-Injection Well*** if the well is to be converted to something other than an injection well.

Provide a **NARRATIVE DESCRIPTION** of the work planned to be performed, or that was performed. The narrative should include a description of the main procedures planned or that occurred during the work activity. A service company report, daily report, or similar document may be attached if it includes all the requested information and is clear and legible.

For well reworks, include the following information: The reason for the well rework; depths of activity; type of activity; changes to injection well configuration, well casing, or cement behind casing; any plug added to the well and its depth; any newly drilled interval and its depth; method(s) to demonstrate that the well has mechanical integrity (as applicable); and any deviations from the approved rework plan (as applicable).

For a well plugging plan, include the following information: Reason for the well plugging; number of plugs placed, and their depths; materials used as plugs (e.g., cast iron bridge plug, cement, cement retainer); method to set plugs; and wait-on-cement times, if any. Also provide one or more cost estimates from an independent firm in the business of plugging and abandoning wells to plug the well as described in the plan.

For well plugging affidavit, include the following information: Reason for the well plugging; number of plugs placed, and their depths; materials used as plugs (e.g., cast iron bridge plug, cement, cement retainer); method to set plugs; wait-on-cement times, if any; and any deviations from the approved plugging plan (if applicable).

For conversion to a non-injection well, include the following information: Depths of activity; type of activity; changes to injection well configuration, well casing, or cement behind casing; any plug added to the well and its depth; any newly drilled interval and its depth; depths of new perforations; and method(s) to demonstrate that the well has mechanical integrity (as applicable).

For all of the above activities, include a well sketch depicting the work, results of well tests/logging performed, service company tickets, and any other available information demonstrating how the work was/is to be performed. Also, specify whether depths are below ground surface, relative to Kelly bushing, etc.

CERTIFICATION: This form must be signed and dated by either: a responsible corporate officer for a corporation, by a general partner for a partnership, by the proprietor of a sole proprietorship, or by a principal executive or ranking elected official for a public agency.

PAPERWORK REDUCTION ACT NOTICE: The public reporting and recordkeeping burden for this collection of information is estimated to average between 6.0 and 7.9 hours per response, depending on the injection well class. Burden means the total time, effort, or financial resource expended by persons to generate, maintain, retain, or disclose or provide information to or for a Federal Agency. This includes the time needed to review instructions; develop, acquire, install, and utilize technology and systems for the purposes of collecting, validating, and verifying information, processing and maintaining information, and disclosing and providing information; adjust the existing ways to comply with any previously applicable instructions and requirements; train personnel to be able to respond to the collection of information; search data sources; complete and review the collection of information; and, transmit or otherwise disclose the information. An agency may not conduct or sponsor, and a person is not required to respond to, a collection of information unless it displays a currently valid OMB control number. Send comments on the Agency's need for this information, the accuracy of the provided burden estimates, and any suggested methods for minimizing respondent burden, including the use of automated collection techniques to Director, Collection Strategies Division, U.S. Environmental Protection Agency (2822), 1200 Pennsylvania Ave., NW., Washington, D.C. 20460. Include the OMB control number in any correspondence. Do not send the completed forms to this address.

Saved by: MNICHOLLS Printed: 7/25/2019 7:20 PM Sheet: HA-FIG-A-L(2)
\\HALEYALDRICH.COM\SHARE\PHX_COMMON\PROJECTS\FLORENCE COPPER\132473 FLORENCE GROUNDWATER PERMITTING\CAD\132473_000-OBSERVATION_WELL_CONSTRUCTION DIAGRAM.DWG

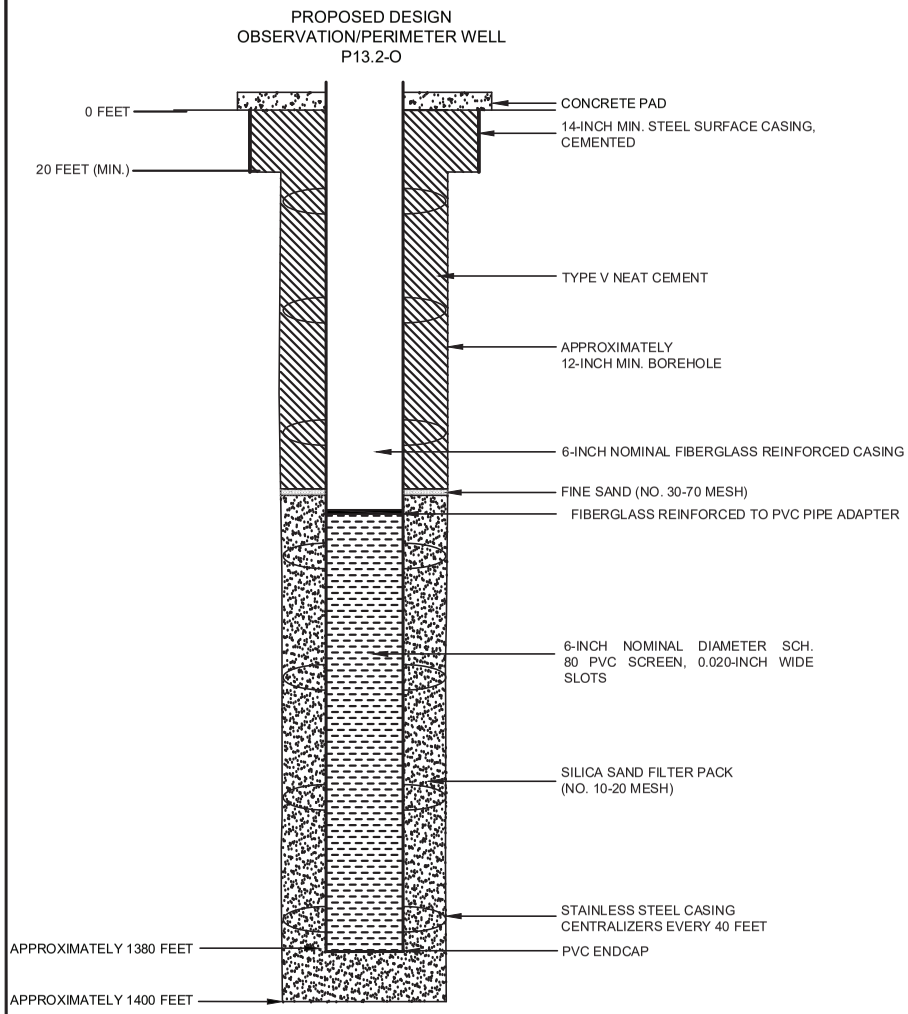

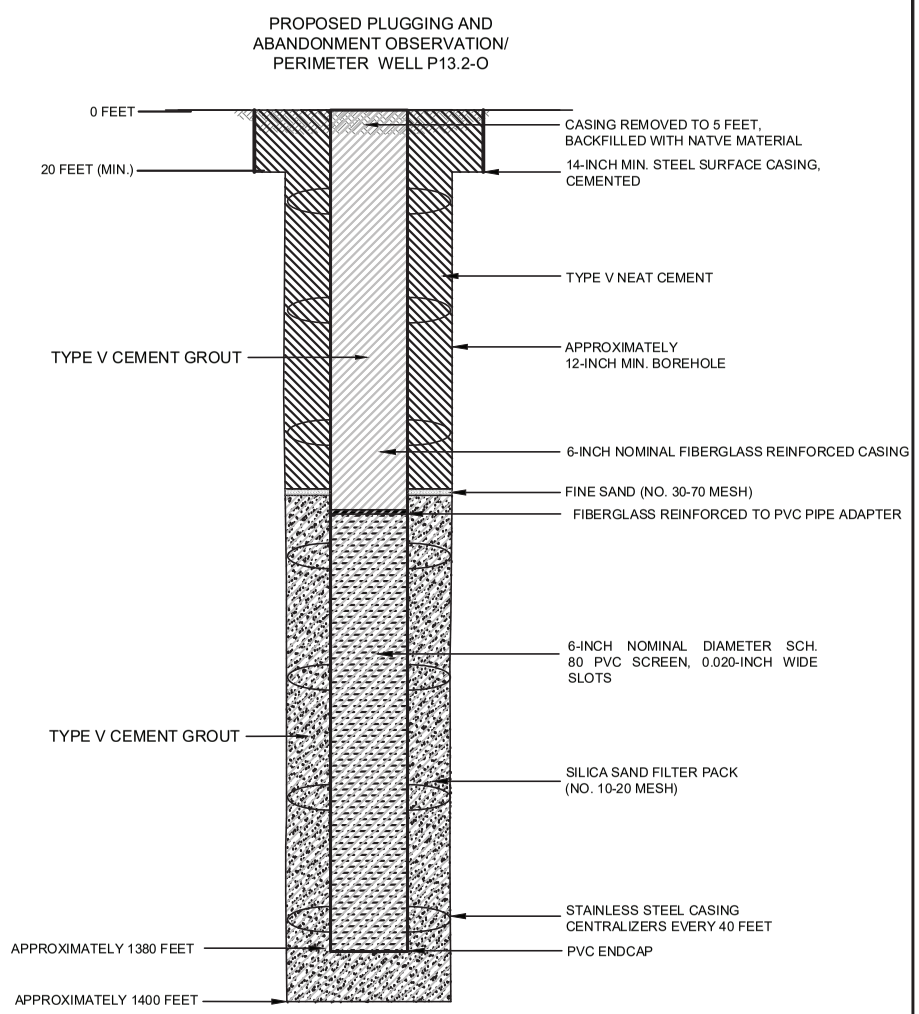

NOTES

1. WELL DESIGN DETAILS ARE BASED ON CORE HOLE AND WELL LOG RECORDS.

HALEY ALDRICH

FLORENCE COPPER, INC.
FLORENCE, ARIZONA

ABANDONMENT SCHEMATIC
OBSERVATION/PERIMETER
WELL P13.2-O

SEPTEMBER 2019
SCALE: AS SHOWN

FIGURE 1

OMB No. 2040-0042 Approval Expires 4/30/2022

United States Environmental Protection Agency

WELL REWORK RECORD, PLUGGING AND ABANDONMENT PLAN, OR PLUGGING AND ABANDONMENT AFFIDAVIT

Name and Address, Phone Number and/or Email of Permittee

Florence Copper Project
1575 W Hunt Hwy,
Florence, AZ 85132

Permit or EPA ID Number	API Number	Full Well Name
R9UIC-AZ3-FY11-1		P13-GL

State	County
Arizona	Pinal

Locate well in two directions from nearest lines of quarter section and drilling unit

Latitude 33.05211091

Surface Location

NW **1/4 of** SW **1/4 of Section** 28 **Township** 4S **Range** 9E

Longitude -111.4355984

_____ **ft. from (N/S)** _____ **Line of quarter section**

_____ **ft. from (E/W)** _____ **Line of quarter section.**

Well Class	Timing of Action (pick one)	Type of Action (pick one)
☐ Class I ☐ Class II ☑ Class III ☐ Class V	☑ Notice Prior to Work Date Expected to Commence March 2021 ☐ Report After Work Date Work Ended	☐ Well Rework ☑ Plugging and Abandonment ☐ Conversion to a Non-Injection Well

Provide a narrative description of the work planned to be performed, or that was performed. Use additional pages as necessary. See instructions.

A workover rig capable of performing the required abandonment operations at the required depths will be moved in and set up over the well. The well casing will be inspected to determine the depth to which the well remains open and if any obstructions are present in the casing; the presence and condition of any existing surface casing will also be documented. If necessary, the well casing will be cleaned out to the bottom of the deepest screen or perforation to enable placement of cement seals.

If surface casing is present, an attempt will be made to remove it. If removal of the surface casing is not feasible, it will be left in the hole and perforated as needed to allow an annular seal to be placed to a depth of at least 25 feet bgs. In areas of agricultural use, the surface casing will be cut at least 5 feet bgs and removed.

If the surface casing cannot be removed, it will be perforated from at least 20 feet below the bedrock-LBFU contact to at least 20 feet above the contact; from at least 20 feet below the base of the MFGU to at least 20 feet above the top of the MFGU; and from at least 25 feet bgs to 5 feet bgs.

A tremie pipe will be used to place Type V cement in the open well from the bottom of the well casing to the top of the well casing. Cement retainers, as described above, will be used to force cement grout into the annulus and behind perforated screen intervals, as necessary.

If the well casing has been obstructed, as much cement as possible will be placed from 100 feet below the LBFU-bedrock contact to the top of the casing.

The volume of Type V cement will be recorded and will not be less than the estimated volume of material required to fill each interval. All cement grout will consist of Type V cement, or equivalent approved in accordance with the UIC Permit.

Certification

I certify under the penalty of law that I have personally examined and am familiar with the information submitted in this document and all attachments and that, based on my inquiry of those individuals immediately responsible for obtaining the information, I believe that the information is true, accurate, and complete. I am aware that there are significant penalties for submitting false information, including the possibliity of fine and imprisonment. (Ref. 40 CFR § 144.32)

Name and Official Title *(Please type or print)*	Signature	Date Signed
Dan Johnson, VP - General Manager		10/3/2019

INSTRUCTIONS FOR FORM 7520-19

This form replaces forms 7520-12 and 7520-14. Use this form only when work is planned or has occurred that affects the well's construction or operation as an injection well, including work on the casing, tubing or packer (or for shallow Class V wells, the subsurface fluid emplacement network). Use one form per injection well. While reports or other information developed by contractors or service companies may be attached, this form must be signed by a responsible entity as described at 40 CFR 144.32. Note: operators closing Class V wells should use Form 7520-17.

NAME, ADDRESS, PHONE AND/OR EMAIL OF PERMITTEE: Enter the name and street address, city/town, state, and ZIP code of the permittee. Also provide an email address (if available) and/or a phone number.

PERMIT OR EPA ID NUMBER: Enter the well identification number or permit number assigned to the well by the EPA or the permitting authority.

API NUMBER: Enter the number assigned by the local jurisdiction (usually a State Oil and Gas Agency) using the American Petroleum Institute standard numbering system.

FULL WELL NAME: Enter the full name of the well or project.

Enter the **STATE** and **COUNTY** where the well is located. For States that do not have counties, use the name of that State's equivalent jurisdiction at a more local level.

WELL LOCATION: Fill in the complete township, range, and section to the nearest quarter-quarter section. A township is north or south of the baseline, and a range is east or west of the principal meridian (e.g., T12N, R34W). Also include the distance, in feet, from the nearest north or south line and nearest east or west line of the quarter-section. Also, enter the **latitude** and **longitude** of the well in decimal degrees, to five or six places if possible; be sure to include a negative sign for the longitude of a well in the Western Hemisphere and a negative sign for the latitude of a well in the Southern Hemisphere.

Enter the **WELL CLASS,** i.e., the class of injection well as defined in 40 CFR 144.6.

TIMING OF THE ACTION: Check ***Notice prior to work*** if the activity has not yet occurred (i.e., is planned). Check ***Report after work*** if the activity described has already occurred. As appropriate, include the date the activity is expected to start or the date the activity was completed. (Note this may not be available, e.g., for a plugging plan submitted with a permit application.)

TYPE OF ACTION: Check the appropriate box to describe the kind of activity being reported. Check ***Well Rework*** for work that was/will be performed on the well after it has already been in operation as an injection well. Check ***Plugging and Abandonment*** to report on plans for or descriptions of final closure/plugging after use as an injection well. Check ***Conversion to a Non-Injection Well*** if the well is to be converted to something other than an injection well.

Provide a **NARRATIVE DESCRIPTION** of the work planned to be performed, or that was performed. The narrative should include a description of the main procedures planned or that occurred during the work activity. A service company report, daily report, or similar document may be attached if it includes all the requested information and is clear and legible.

For well reworks, include the following information: The reason for the well rework; depths of activity; type of activity; changes to injection well configuration, well casing, or cement behind casing; any plug added to the well and its depth; any newly drilled interval and its depth; method(s) to demonstrate that the well has mechanical integrity (as applicable); and any deviations from the approved rework plan (as applicable).

For a well plugging plan, include the following information: Reason for the well plugging; number of plugs placed, and their depths; materials used as plugs (e.g., cast iron bridge plug, cement, cement retainer); method to set plugs; and wait-on-cement times, if any. Also provide one or more cost estimates from an independent firm in the business of plugging and abandoning wells to plug the well as described in the plan.

For well plugging affidavit, include the following information: Reason for the well plugging; number of plugs placed, and their depths; materials used as plugs (e.g., cast iron bridge plug, cement, cement retainer); method to set plugs; wait-on-cement times, if any; and any deviations from the approved plugging plan (if applicable).

For conversion to a non-injection well, include the following information: Depths of activity; type of activity; changes to injection well configuration, well casing, or cement behind casing; any plug added to the well and its depth; any newly drilled interval and its depth; depths of new perforations; and method(s) to demonstrate that the well has mechanical integrity (as applicable).

For all of the above activities, include a well sketch depicting the work, results of well tests/logging performed, service company tickets, and any other available information demonstrating how the work was/is to be performed. Also, specify whether depths are below ground surface, relative to Kelly bushing, etc.

CERTIFICATION: This form must be signed and dated by either: a responsible corporate officer for a corporation, by a general partner for a partnership, by the proprietor of a sole proprietorship, or by a principal executive or ranking elected official for a public agency.

PAPERWORK REDUCTION ACT NOTICE: The public reporting and recordkeeping burden for this collection of information is estimated to average between 6.0 and 7.9 hours per response, depending on the injection well class. Burden means the total time, effort, or financial resource expended by persons to generate, maintain, retain, or disclose or provide information to or for a Federal Agency. This includes the time needed to review instructions; develop, acquire, install, and utilize technology and systems for the purposes of collecting, validating, and verifying information, processing and maintaining information, and disclosing and providing information; adjust the existing ways to comply with any previously applicable instructions and requirements; train personnel to be able to respond to the collection of information; search data sources; complete and review the collection of information; and, transmit or otherwise disclose the information. An agency may not conduct or sponsor, and a person is not required to respond to, a collection of information unless it displays a currently valid OMB control number. Send comments on the Agency's need for this information, the accuracy of the provided burden estimates, and any suggested methods for minimizing respondent burden, including the use of automated collection techniques to Director, Collection Strategies Division, U.S. Environmental Protection Agency (2822), 1200 Pennsylvania Ave., NW., Washington, D.C. 20460. Include the OMB control number in any correspondence. Do not send the completed forms to this address.

Saved by: MNICHOLLS Printed: 7/25/2019 7:20 PM Sheet: HA-FIG-A-L(2)
\\HALEYALDRICH.COM\SHARE\PHX_COMMON\PROJECTS\FLORENCE COPPER\132473 FLORENCE GROUNDWATER PERMITTING\CAD\132473_000-OBSERVATION_WELL_CONSTRUCTION DIAGRAM.DWG

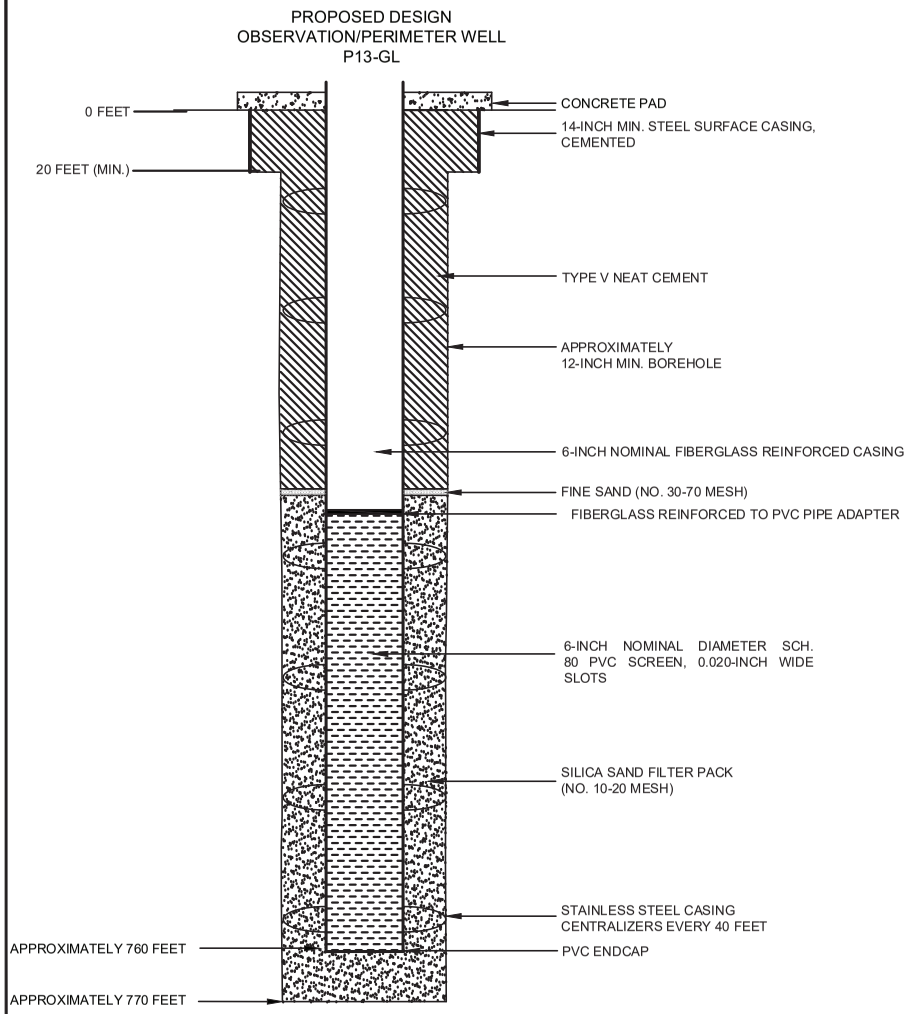

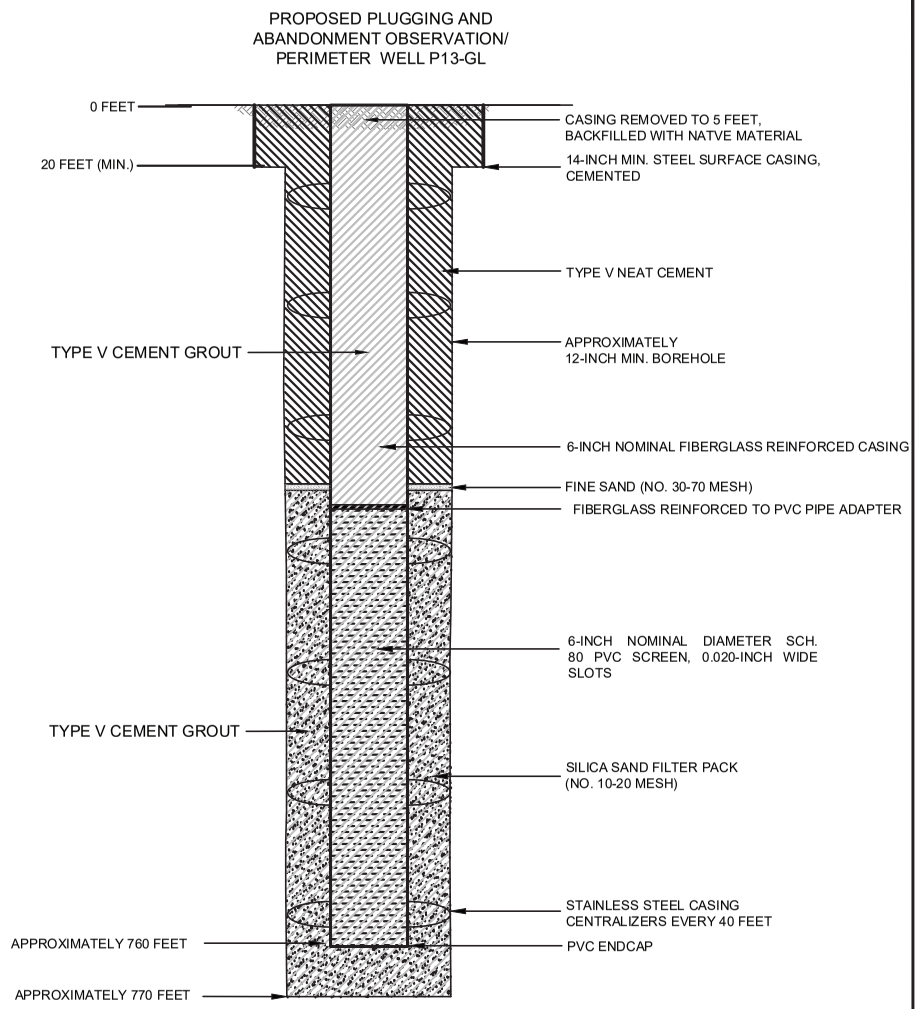

NOTES

1. WELL DESIGN DETAILS ARE BASED ON CORE HOLE AND WELL LOG RECORDS.

HALEY ALDRICH

FLORENCE COPPER, INC.
FLORENCE, ARIZONA

ABANDONMENT SCHEMATIC
OBSERVATION/PERIMETER
WELL P13-GL

SEPTEMBER 2019
SCALE: AS SHOWN

FIGURE 1

OMB No. 2040-0042 Approval Expires 4/30/2022

United States Environmental Protection Agency

EPA

WELL REWORK RECORD, PLUGGING AND ABANDONMENT PLAN, OR PLUGGING AND ABANDONMENT AFFIDAVIT

Name and Address, Phone Number and/or Email of Permittee

Florence Copper Project
1575 W Hunt Hwy,
Florence, AZ 85132

Permit or EPA ID Number	API Number	Full Well Name
R9UIC-AZ3-FY11-1		P15-GL

State	County
Arizona	Pinal

Locate well in two directions from nearest lines of quarter section and drilling unit

Surface Location

SW 1/4 of SW 1/4 of Section 28 Township 4S Range 9E

Latitude 33.04835918

Longitude -111.4352758

_____ ft. from (N/S) _____ Line of quarter section

_____ ft. from (E/W) _____ Line of quarter section.

Well Class	Timing of Action (pick one)	Type of Action (pick one)
☐ Class I ☐ Class II ☑ Class III ☐ Class V	☑ Notice Prior to Work Date Expected to Commence March 2021 ☐ Report After Work Date Work Ended	☐ Well Rework ☑ Plugging and Abandonment ☐ Conversion to a Non-Injection Well

Provide a narrative description of the work planned to be performed, or that was performed. Use additional pages as necessary. See instructions.

A workover rig capable of performing the required abandonment operations at the required depths will be moved in and set up over the well. The well casing will be inspected to determine the depth to which the well remains open and if any obstructions are present in the casing; the presence and condition of any existing surface casing will also be documented. If necessary, the well casing will be cleaned out to the bottom of the deepest screen or perforation to enable placement of cement seals.

If surface casing is present, an attempt will be made to remove it. If removal of the surface casing is not feasible, it will be left in the hole and perforated as needed to allow an annular seal to be placed to a depth of at least 25 feet bgs. In areas of agricultural use, the surface casing will be cut at least 5 feet bgs and removed.

If the surface casing cannot be removed, it will be perforated from at least 20 feet below the bedrock-LBFU contact to at least 20 feet above the contact; from at least 20 feet below the base of the MFGU to at least 20 feet above the top of the MFGU; and from at least 25 feet bgs to 5 feet bgs.

A tremie pipe will be used to place Type V cement in the open well from the bottom of the well casing to the top of the well casing. Cement retainers, as described above, will be used to force cement grout into the annulus and behind perforated screen intervals, as necessary.

If the well casing has been obstructed, as much cement as possible will be placed from 100 feet below the LBFU-bedrock contact to the top of the casing.

The volume of Type V cement will be recorded and will not be less than the estimated volume of material required to fill each interval. All cement grout will consist of Type V cement, or equivalent approved in accordance with the UIC Permit.

Certification

I certify under the penalty of law that I have personally examined and am familiar with the information submitted in this document and all attachments and that, based on my inquiry of those individuals immediately responsible for obtaining the information, I believe that the information is true, accurate, and complete. I am aware that there are significant penalties for submitting false information, including the possibliity of fine and imprisonment. (Ref. 40 CFR § 144.32)

Name and Official Title *(Please type or print)*	Signature	Date Signed
Dan Johnson, VP - General Manager		10/3/2019

INSTRUCTIONS FOR FORM 7520-19

This form replaces forms 7520-12 and 7520-14. Use this form only when work is planned or has occurred that affects the well's construction or operation as an injection well, including work on the casing, tubing or packer (or for shallow Class V wells, the subsurface fluid emplacement network). Use one form per injection well. While reports or other information developed by contractors or service companies may be attached, this form must be signed by a responsible entity as described at 40 CFR 144.32. Note: operators closing Class V wells should use Form 7520-17.

NAME, ADDRESS, PHONE AND/OR EMAIL OF PERMITTEE: Enter the name and street address, city/town, state, and ZIP code of the permittee. Also provide an email address (if available) and/or a phone number.

PERMIT OR EPA ID NUMBER: Enter the well identification number or permit number assigned to the well by the EPA or the permitting authority.

API NUMBER: Enter the number assigned by the local jurisdiction (usually a State Oil and Gas Agency) using the American Petroleum Institute standard numbering system.

FULL WELL NAME: Enter the full name of the well or project.

Enter the **STATE** and **COUNTY** where the well is located. For States that do not have counties, use the name of that State's equivalent jurisdiction at a more local level.

WELL LOCATION: Fill in the complete township, range, and section to the nearest quarter-quarter section. A township is north or south of the baseline, and a range is east or west of the principal meridian (e.g., T12N, R34W). Also include the distance, in feet, from the nearest north or south line and nearest east or west line of the quarter-section. Also, enter the **latitude** and **longitude** of the well in decimal degrees, to five or six places if possible; be sure to include a negative sign for the longitude of a well in the Western Hemisphere and a negative sign for the latitude of a well in the Southern Hemisphere.

Enter the **WELL CLASS,** i.e., the class of injection well as defined in 40 CFR 144.6.

TIMING OF THE ACTION: Check ***Notice prior to work*** if the activity has not yet occurred (i.e., is planned). Check ***Report after work*** if the activity described has already occurred. As appropriate, include the date the activity is expected to start or the date the activity was completed. (Note this may not be available, e.g., for a plugging plan submitted with a permit application.)

TYPE OF ACTION: Check the appropriate box to describe the kind of activity being reported. Check ***Well Rework*** for work that was/will be performed on the well after it has already been in operation as an injection well. Check ***Plugging and Abandonment*** to report on plans for or descriptions of final closure/plugging after use as an injection well. Check ***Conversion to a Non-Injection Well*** if the well is to be converted to something other than an injection well.

Provide a **NARRATIVE DESCRIPTION** of the work planned to be performed, or that was performed. The narrative should include a description of the main procedures planned or that occurred during the work activity. A service company report, daily report, or similar document may be attached if it includes all the requested information and is clear and legible.

For well reworks, include the following information: The reason for the well rework; depths of activity; type of activity; changes to injection well configuration, well casing, or cement behind casing; any plug added to the well and its depth; any newly drilled interval and its depth; method(s) to demonstrate that the well has mechanical integrity (as applicable); and any deviations from the approved rework plan (as applicable).

For a well plugging plan, include the following information: Reason for the well plugging; number of plugs placed, and their depths; materials used as plugs (e.g., cast iron bridge plug, cement, cement retainer); method to set plugs; and wait-on-cement times, if any. Also provide one or more cost estimates from an independent firm in the business of plugging and abandoning wells to plug the well as described in the plan.

For well plugging affidavit, include the following information: Reason for the well plugging; number of plugs placed, and their depths; materials used as plugs (e.g., cast iron bridge plug, cement, cement retainer); method to set plugs; wait-on-cement times, if any; and any deviations from the approved plugging plan (if applicable).

For conversion to a non-injection well, include the following information: Depths of activity; type of activity; changes to injection well configuration, well casing, or cement behind casing; any plug added to the well and its depth; any newly drilled interval and its depth; depths of new perforations; and method(s) to demonstrate that the well has mechanical integrity (as applicable).

For all of the above activities, include a well sketch depicting the work, results of well tests/logging performed, service company tickets, and any other available information demonstrating how the work was/is to be performed. Also, specify whether depths are below ground surface, relative to Kelly bushing, etc.

CERTIFICATION: This form must be signed and dated by either: a responsible corporate officer for a corporation, by a general partner for a partnership, by the proprietor of a sole proprietorship, or by a principal executive or ranking elected official for a public agency.

PAPERWORK REDUCTION ACT NOTICE: The public reporting and recordkeeping burden for this collection of information is estimated to average between 6.0 and 7.9 hours per response, depending on the injection well class. Burden means the total time, effort, or financial resource expended by persons to generate, maintain, retain, or disclose or provide information to or for a Federal Agency. This includes the time needed to review instructions; develop, acquire, install, and utilize technology and systems for the purposes of collecting, validating, and verifying information, processing and maintaining information, and disclosing and providing information; adjust the existing ways to comply with any previously applicable instructions and requirements; train personnel to be able to respond to the collection of information; search data sources; complete and review the collection of information; and, transmit or otherwise disclose the information. An agency may not conduct or sponsor, and a person is not required to respond to, a collection of information unless it displays a currently valid OMB control number. Send comments on the Agency's need for this information, the accuracy of the provided burden estimates, and any suggested methods for minimizing respondent burden, including the use of automated collection techniques to Director, Collection Strategies Division, U.S. Environmental Protection Agency (2822), 1200 Pennsylvania Ave., NW., Washington, D.C. 20460. Include the OMB control number in any correspondence. Do not send the completed forms to this address.

Saved by: MNICHOLLS Printed: 7/25/2019 7:20 PM Sheet: HA-FIG-A-L(2)
\\HALEYALDRICH.COM\SHARE\PHX_COMMON\PROJECTS\FLORENCE COPPER\132473 FLORENCE GROUNDWATER PERMITTING\CAD\132473_000-OBSERVATION_WELL_CONSTRUCTION DIAGRAM.DWG

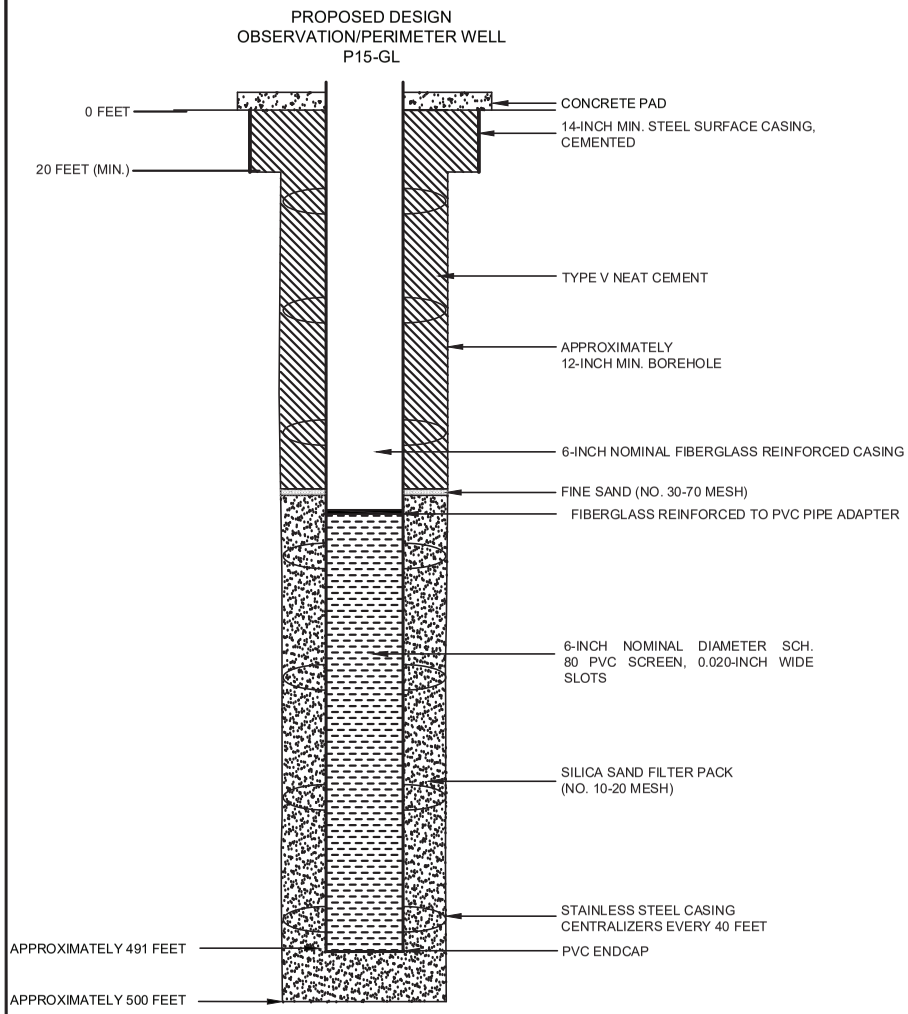

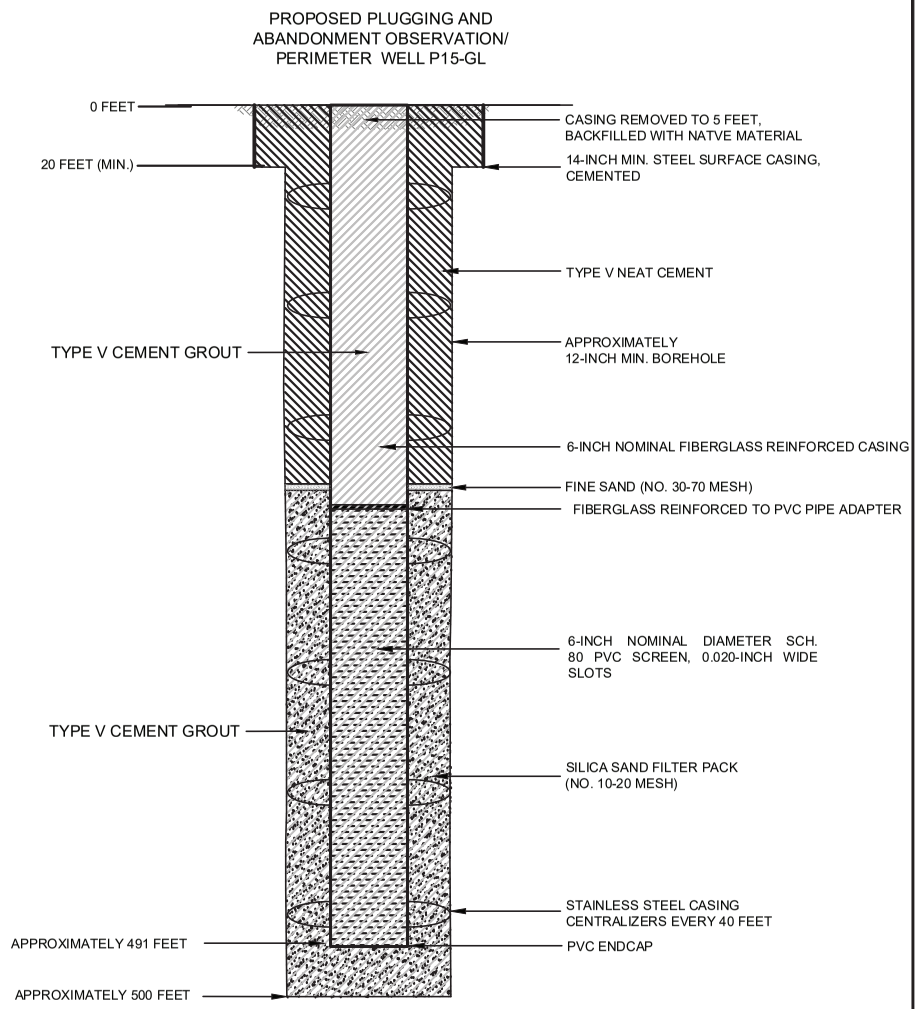

NOTES

1. WELL DESIGN DETAILS ARE BASED ON CORE HOLE AND WELL LOG RECORDS.

HALEY ALDRICH

FLORENCE COPPER, INC.
FLORENCE, ARIZONA

ABANDONMENT SCHEMATIC
OBSERVATION/PERIMETER
WELL P15-GL

SEPTEMBER 2019
SCALE: AS SHOWN

FIGURE 1

OMB No. 2040-0042 Approval Expires 4/30/2022

United States Environmental Protection Agency

WELL REWORK RECORD, PLUGGING AND ABANDONMENT PLAN, OR PLUGGING AND ABANDONMENT AFFIDAVIT

Name and Address, Phone Number and/or Email of Permittee

Florence Copper Project
1575 W Hunt Hwy,
Florence, AZ 85132

Permit or EPA ID Number	API Number	Full Well Name
R9UIC-AZ3-FY11-1		P15-O

State	County
Arizona	Pinal

Locate well in two directions from nearest lines of quarter section and drilling unit

Surface Location

SW 1/4 of SW 1/4 of Section 28 Township 4S Range 9E

Latitude 33.04833274

Longitude -111.4349783

_____ ft. from (N/S) _____ Line of quarter section

_____ ft. from (E/W) _____ Line of quarter section.

Well Class	Timing of Action (pick one)	Type of Action (pick one)
☐ Class I ☐ Class II ☑ Class III ☐ Class V	☑ Notice Prior to Work Date Expected to Commence March 2021 ☐ Report After Work Date Work Ended	☐ Well Rework ☑ Plugging and Abandonment ☐ Conversion to a Non-Injection Well

Provide a narrative description of the work planned to be performed, or that was performed. Use additional pages as necessary. See instructions.

A workover rig capable of performing the required abandonment operations at the required depths will be moved in and set up over the well. The well casing will be inspected to determine the depth to which the well remains open and if any obstructions are present in the casing; the presence and condition of any existing surface casing will also be documented. If necessary, the well casing will be cleaned out to the bottom of the deepest screen or perforation to enable placement of cement seals.

If surface casing is present, an attempt will be made to remove it. If removal of the surface casing is not feasible, it will be left in the hole and perforated as needed to allow an annular seal to be placed to a depth of at least 25 feet bgs. In areas of agricultural use, the surface casing will be cut at least 5 feet bgs and removed.

If the surface casing cannot be removed, it will be perforated from at least 20 feet below the bedrock-LBFU contact to at least 20 feet above the contact; from at least 20 feet below the base of the MFGU to at least 20 feet above the top of the MFGU; and from at least 25 feet bgs to 5 feet bgs.

A tremie pipe will be used to place Type V cement in the open well from the bottom of the well casing to the top of the well casing. Cement retainers, as described above, will be used to force cement grout into the annulus and behind perforated screen intervals, as necessary.

If the well casing has been obstructed, as much cement as possible will be placed from 100 feet below the LBFU-bedrock contact to the top of the casing.

The volume of Type V cement will be recorded and will not be less than the estimated volume of material required to fill each interval. All cement grout will consist of Type V cement, or equivalent approved in accordance with the UIC Permit.

Certification

I certify under the penalty of law that I have personally examined and am familiar with the information submitted in this document and all attachments and that, based on my inquiry of those individuals immediately responsible for obtaining the information, I believe that the information is true, accurate, and complete. I am aware that there are significant penalties for submitting false information, including the possibliity of fine and imprisonment. (Ref. 40 CFR § 144.32)

Name and Official Title *(Please type or print)*	Signature	Date Signed
Dan Johnson, VP - General Manager		10/3/2019

INSTRUCTIONS FOR FORM 7520-19

This form replaces forms 7520-12 and 7520-14. Use this form only when work is planned or has occurred that affects the well's construction or operation as an injection well, including work on the casing, tubing or packer (or for shallow Class V wells, the subsurface fluid emplacement network). Use one form per injection well. While reports or other information developed by contractors or service companies may be attached, this form must be signed by a responsible entity as described at 40 CFR 144.32. Note: operators closing Class V wells should use Form 7520-17.

NAME, ADDRESS, PHONE AND/OR EMAIL OF PERMITTEE: Enter the name and street address, city/town, state, and ZIP code of the permittee. Also provide an email address (if available) and/or a phone number.

PERMIT OR EPA ID NUMBER: Enter the well identification number or permit number assigned to the well by the EPA or the permitting authority.

API NUMBER: Enter the number assigned by the local jurisdiction (usually a State Oil and Gas Agency) using the American Petroleum Institute standard numbering system.

FULL WELL NAME: Enter the full name of the well or project.

Enter the **STATE** and **COUNTY** where the well is located. For States that do not have counties, use the name of that State's equivalent jurisdiction at a more local level.

WELL LOCATION: Fill in the complete township, range, and section to the nearest quarter-quarter section. A township is north or south of the baseline, and a range is east or west of the principal meridian (e.g., T12N, R34W). Also include the distance, in feet, from the nearest north or south line and nearest east or west line of the quarter-section. Also, enter the **latitude** and **longitude** of the well in decimal degrees, to five or six places if possible; be sure to include a negative sign for the longitude of a well in the Western Hemisphere and a negative sign for the latitude of a well in the Southern Hemisphere.

Enter the **WELL CLASS,** i.e., the class of injection well as defined in 40 CFR 144.6.

TIMING OF THE ACTION: Check ***Notice prior to work*** if the activity has not yet occurred (i.e., is planned). Check ***Report after work*** if the activity described has already occurred. As appropriate, include the date the activity is expected to start or the date the activity was completed. (Note this may not be available, e.g., for a plugging plan submitted with a permit application.)

TYPE OF ACTION: Check the appropriate box to describe the kind of activity being reported. Check ***Well Rework*** for work that was/will be performed on the well after it has already been in operation as an injection well. Check ***Plugging and Abandonment*** to report on plans for or descriptions of final closure/plugging after use as an injection well. Check ***Conversion to a Non-Injection Well*** if the well is to be converted to something other than an injection well.

Provide a **NARRATIVE DESCRIPTION** of the work planned to be performed, or that was performed. The narrative should include a description of the main procedures planned or that occurred during the work activity. A service company report, daily report, or similar document may be attached if it includes all the requested information and is clear and legible.

For well reworks, include the following information: The reason for the well rework; depths of activity; type of activity; changes to injection well configuration, well casing, or cement behind casing; any plug added to the well and its depth; any newly drilled interval and its depth; method(s) to demonstrate that the well has mechanical integrity (as applicable); and any deviations from the approved rework plan (as applicable).

For a well plugging plan, include the following information: Reason for the well plugging; number of plugs placed, and their depths; materials used as plugs (e.g., cast iron bridge plug, cement, cement retainer); method to set plugs; and wait-on-cement times, if any. Also provide one or more cost estimates from an independent firm in the business of plugging and abandoning wells to plug the well as described in the plan.

For well plugging affidavit, include the following information: Reason for the well plugging; number of plugs placed, and their depths; materials used as plugs (e.g., cast iron bridge plug, cement, cement retainer); method to set plugs; wait-on-cement times, if any; and any deviations from the approved plugging plan (if applicable).

For conversion to a non-injection well, include the following information: Depths of activity; type of activity; changes to injection well configuration, well casing, or cement behind casing; any plug added to the well and its depth; any newly drilled interval and its depth; depths of new perforations; and method(s) to demonstrate that the well has mechanical integrity (as applicable).

For all of the above activities, include a well sketch depicting the work, results of well tests/logging performed, service company tickets, and any other available information demonstrating how the work was/is to be performed. Also, specify whether depths are below ground surface, relative to Kelly bushing, etc.

CERTIFICATION: This form must be signed and dated by either: a responsible corporate officer for a corporation, by a general partner for a partnership, by the proprietor of a sole proprietorship, or by a principal executive or ranking elected official for a public agency.

PAPERWORK REDUCTION ACT NOTICE: The public reporting and recordkeeping burden for this collection of information is estimated to average between 6.0 and 7.9 hours per response, depending on the injection well class. Burden means the total time, effort, or financial resource expended by persons to generate, maintain, retain, or disclose or provide information to or for a Federal Agency. This includes the time needed to review instructions; develop, acquire, install, and utilize technology and systems for the purposes of collecting, validating, and verifying information, processing and maintaining information, and disclosing and providing information; adjust the existing ways to comply with any previously applicable instructions and requirements; train personnel to be able to respond to the collection of information; search data sources; complete and review the collection of information; and, transmit or otherwise disclose the information. An agency may not conduct or sponsor, and a person is not required to respond to, a collection of information unless it displays a currently valid OMB control number. Send comments on the Agency's need for this information, the accuracy of the provided burden estimates, and any suggested methods for minimizing respondent burden, including the use of automated collection techniques to Director, Collection Strategies Division, U.S. Environmental Protection Agency (2822), 1200 Pennsylvania Ave., NW., Washington, D.C. 20460. Include the OMB control number in any correspondence. Do not send the completed forms to this address.

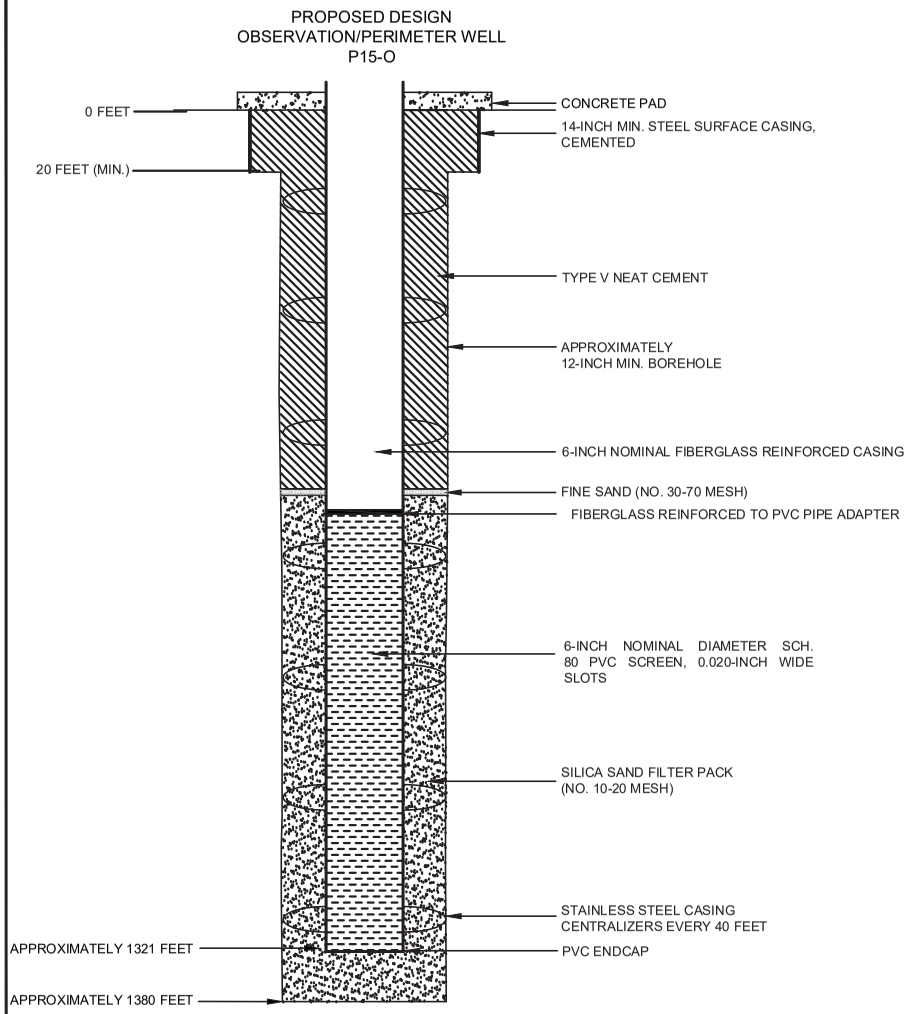

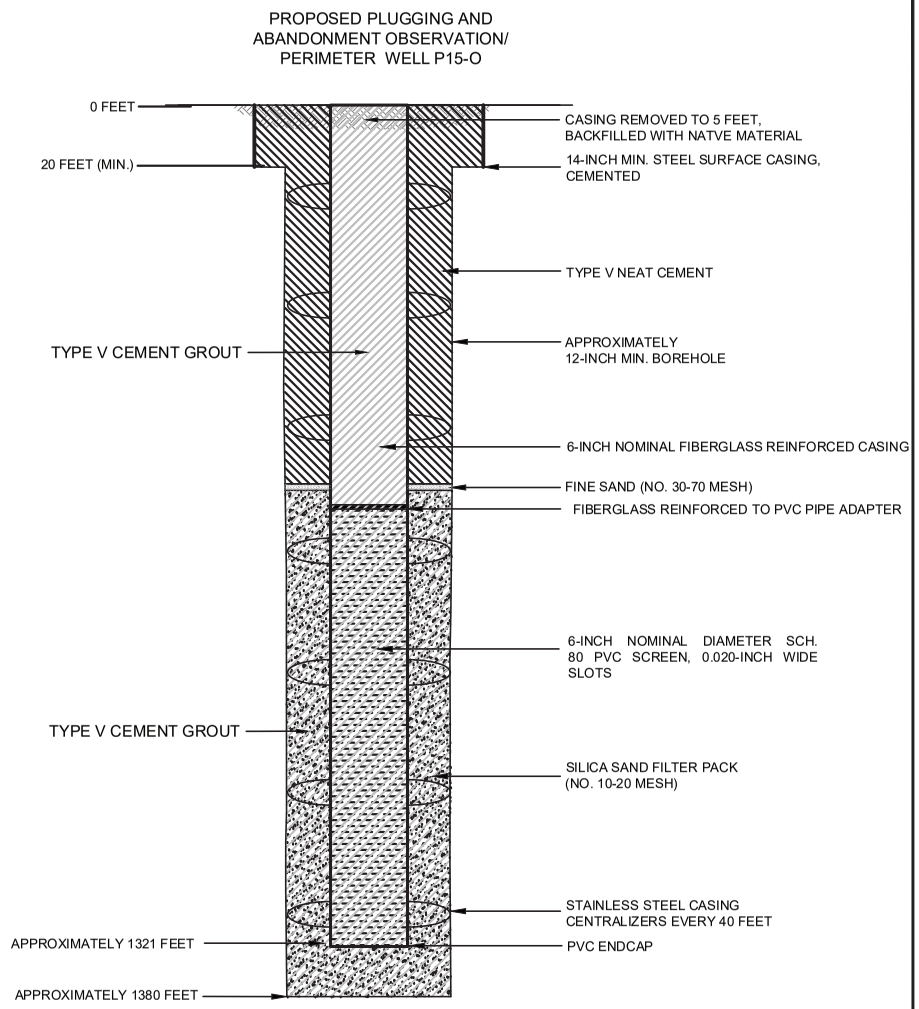

NOTES

1. WELL DESIGN DETAILS ARE BASED ON CORE HOLE AND WELL LOG RECORDS.

HALEY ALDRICH

FLORENCE COPPER, INC.
FLORENCE, ARIZONA

ABANDONMENT SCHEMATIC
OBSERVATION/PERIMETER
WELL P15-O

SEPTEMBER 2019
SCALE: AS SHOWN

FIGURE 1

OMB No. 2040-0042 Approval Expires 4/30/2022

United States Environmental Protection Agency

WELL REWORK RECORD, PLUGGING AND ABANDONMENT PLAN, OR PLUGGING AND ABANDONMENT AFFIDAVIT

Name and Address, Phone Number and/or Email of Permittee

Florence Copper Project
1575 W Hunt Hwy,
Florence, AZ 85132

Permit or EPA ID Number	API Number	Full Well Name
R9UIC-AZ3-FY11-1		P19.1-O

State	County
Arizona	Pinal

Locate well in two directions from nearest lines of quarter section and drilling unit

Latitude 33.05359177

Longitude -111.4322359

Surface Location

SE **1/4 of** NW **1/4 of Section** 28 **Township** 4S **Range** 9E

_____ **ft. from (N/S)** _____ **Line of quarter section**

_____ **ft. from (E/W)** _____ **Line of quarter section.**

Well Class	Timing of Action (pick one)	Type of Action (pick one)
☐ Class I ☐ Class II ☑ Class III ☐ Class V	☑ Notice Prior to Work Date Expected to Commence March 2021 ☐ Report After Work Date Work Ended	☐ Well Rework ☑ Plugging and Abandonment ☐ Conversion to a Non-Injection Well

Provide a narrative description of the work planned to be performed, or that was performed. Use additional pages as necessary. See instructions.

A workover rig capable of performing the required abandonment operations at the required depths will be moved in and set up over the well. The well casing will be inspected to determine the depth to which the well remains open and if any obstructions are present in the casing; the presence and condition of any existing surface casing will also be documented. If necessary, the well casing will be cleaned out to the bottom of the deepest screen or perforation to enable placement of cement seals.

If surface casing is present, an attempt will be made to remove it. If removal of the surface casing is not feasible, it will be left in the hole and perforated as needed to allow an annular seal to be placed to a depth of at least 25 feet bgs. In areas of agricultural use, the surface casing will be cut at least 5 feet bgs and removed.

If the surface casing cannot be removed, it will be perforated from at least 20 feet below the bedrock-LBFU contact to at least 20 feet above the contact; from at least 20 feet below the base of the MFGU to at least 20 feet above the top of the MFGU; and from at least 25 feet bgs to 5 feet bgs.

A tremie pipe will be used to place Type V cement in the open well from the bottom of the well casing to the top of the well casing. Cement retainers, as described above, will be used to force cement grout into the annulus and behind perforated screen intervals, as necessary.

If the well casing has been obstructed, as much cement as possible will be placed from 100 feet below the LBFU-bedrock contact to the top of the casing.

The volume of Type V cement will be recorded and will not be less than the estimated volume of material required to fill each interval. All cement grout will consist of Type V cement, or equivalent approved in accordance with the UIC Permit.

Certification

I certify under the penalty of law that I have personally examined and am familiar with the information submitted in this document and all attachments and that, based on my inquiry of those individuals immediately responsible for obtaining the information, I believe that the information is true, accurate, and complete. I am aware that there are significant penalties for submitting false information, including the possibliity of fine and imprisonment. (Ref. 40 CFR § 144.32)

Name and Official Title *(Please type or print)*	Signature	Date Signed
Dan Johnson, VP - General Manager		10/3/2019

INSTRUCTIONS FOR FORM 7520-19

This form replaces forms 7520-12 and 7520-14. Use this form only when work is planned or has occurred that affects the well's construction or operation as an injection well, including work on the casing, tubing or packer (or for shallow Class V wells, the subsurface fluid emplacement network). Use one form per injection well. While reports or other information developed by contractors or service companies may be attached, this form must be signed by a responsible entity as described at 40 CFR 144.32. Note: operators closing Class V wells should use Form 7520-17.

NAME, ADDRESS, PHONE AND/OR EMAIL OF PERMITTEE: Enter the name and street address, city/town, state, and ZIP code of the permittee. Also provide an email address (if available) and/or a phone number.

PERMIT OR EPA ID NUMBER: Enter the well identification number or permit number assigned to the well by the EPA or the permitting authority.

API NUMBER: Enter the number assigned by the local jurisdiction (usually a State Oil and Gas Agency) using the American Petroleum Institute standard numbering system.

FULL WELL NAME: Enter the full name of the well or project.

Enter the **STATE** and **COUNTY** where the well is located. For States that do not have counties, use the name of that State's equivalent jurisdiction at a more local level.

WELL LOCATION: Fill in the complete township, range, and section to the nearest quarter-quarter section. A township is north or south of the baseline, and a range is east or west of the principal meridian (e.g., T12N, R34W). Also include the distance, in feet, from the nearest north or south line and nearest east or west line of the quarter-section. Also, enter the **latitude** and **longitude** of the well in decimal degrees, to five or six places if possible; be sure to include a negative sign for the longitude of a well in the Western Hemisphere and a negative sign for the latitude of a well in the Southern Hemisphere.

Enter the **WELL CLASS,** i.e., the class of injection well as defined in 40 CFR 144.6.

TIMING OF THE ACTION: Check ***Notice prior to work*** if the activity has not yet occurred (i.e., is planned). Check ***Report after work*** if the activity described has already occurred. As appropriate, include the date the activity is expected to start or the date the activity was completed. (Note this may not be available, e.g., for a plugging plan submitted with a permit application.)

TYPE OF ACTION: Check the appropriate box to describe the kind of activity being reported. Check ***Well Rework*** for work that was/will be performed on the well after it has already been in operation as an injection well. Check ***Plugging and Abandonment*** to report on plans for or descriptions of final closure/plugging after use as an injection well. Check ***Conversion to a Non-Injection Well*** if the well is to be converted to something other than an injection well.

Provide a **NARRATIVE DESCRIPTION** of the work planned to be performed, or that was performed. The narrative should include a description of the main procedures planned or that occurred during the work activity. A service company report, daily report, or similar document may be attached if it includes all the requested information and is clear and legible.

For well reworks, include the following information: The reason for the well rework; depths of activity; type of activity; changes to injection well configuration, well casing, or cement behind casing; any plug added to the well and its depth; any newly drilled interval and its depth; method(s) to demonstrate that the well has mechanical integrity (as applicable); and any deviations from the approved rework plan (as applicable).

For a well plugging plan, include the following information: Reason for the well plugging; number of plugs placed, and their depths; materials used as plugs (e.g., cast iron bridge plug, cement, cement retainer); method to set plugs; and wait-on-cement times, if any. Also provide one or more cost estimates from an independent firm in the business of plugging and abandoning wells to plug the well as described in the plan.

For well plugging affidavit, include the following information: Reason for the well plugging; number of plugs placed, and their depths; materials used as plugs (e.g., cast iron bridge plug, cement, cement retainer); method to set plugs; wait-on-cement times, if any; and any deviations from the approved plugging plan (if applicable).

For conversion to a non-injection well, include the following information: Depths of activity; type of activity; changes to injection well configuration, well casing, or cement behind casing; any plug added to the well and its depth; any newly drilled interval and its depth; depths of new perforations; and method(s) to demonstrate that the well has mechanical integrity (as applicable).

For all of the above activities, include a well sketch depicting the work, results of well tests/logging performed, service company tickets, and any other available information demonstrating how the work was/is to be performed. Also, specify whether depths are below ground surface, relative to Kelly bushing, etc.

CERTIFICATION: This form must be signed and dated by either: a responsible corporate officer for a corporation, by a general partner for a partnership, by the proprietor of a sole proprietorship, or by a principal executive or ranking elected official for a public agency.

PAPERWORK REDUCTION ACT NOTICE: The public reporting and recordkeeping burden for this collection of information is estimated to average between 6.0 and 7.9 hours per response, depending on the injection well class. Burden means the total time, effort, or financial resource expended by persons to generate, maintain, retain, or disclose or provide information to or for a Federal Agency. This includes the time needed to review instructions; develop, acquire, install, and utilize technology and systems for the purposes of collecting, validating, and verifying information, processing and maintaining information, and disclosing and providing information; adjust the existing ways to comply with any previously applicable instructions and requirements; train personnel to be able to respond to the collection of information; search data sources; complete and review the collection of information; and, transmit or otherwise disclose the information. An agency may not conduct or sponsor, and a person is not required to respond to, a collection of information unless it displays a currently valid OMB control number. Send comments on the Agency's need for this information, the accuracy of the provided burden estimates, and any suggested methods for minimizing respondent burden, including the use of automated collection techniques to Director, Collection Strategies Division, U.S. Environmental Protection Agency (2822), 1200 Pennsylvania Ave., NW., Washington, D.C. 20460. Include the OMB control number in any correspondence. Do not send the completed forms to this address.

PROPOSED DESIGN
OBSERVATION/PERIMETER WELL
P19.1-O

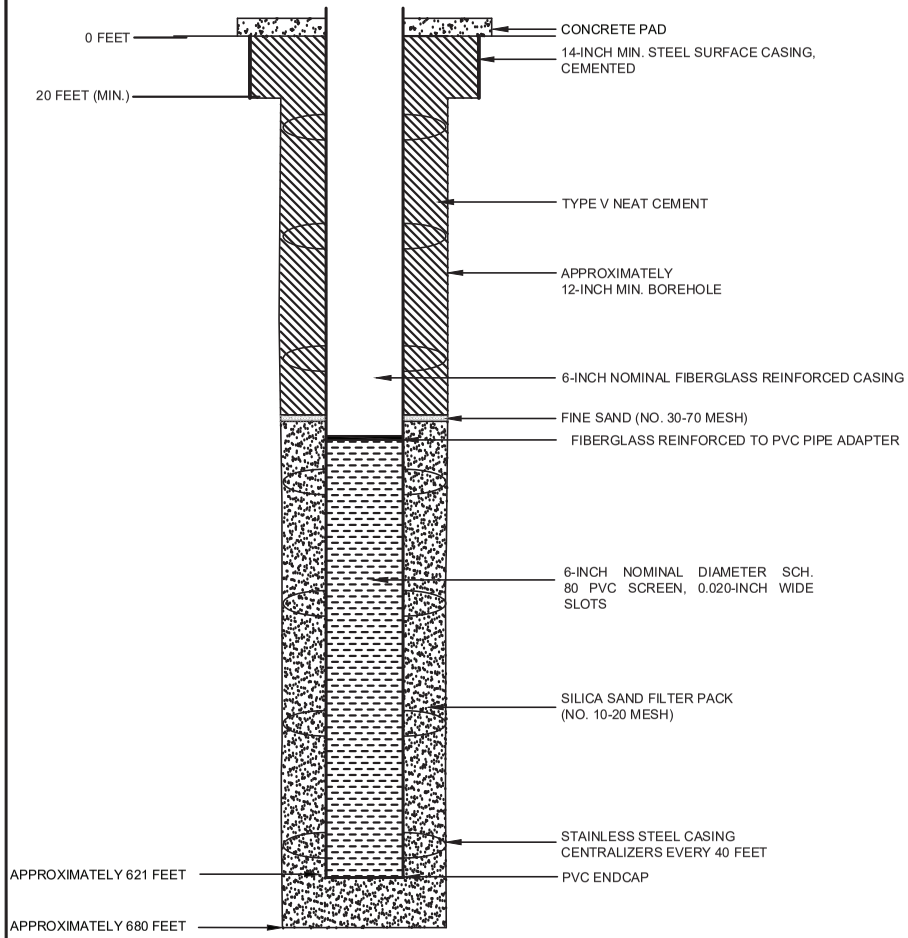

PROPOSED PLUGGING AND
ABANDONMENT OBSERVATION/
PERIMETER WELL P19.1-O

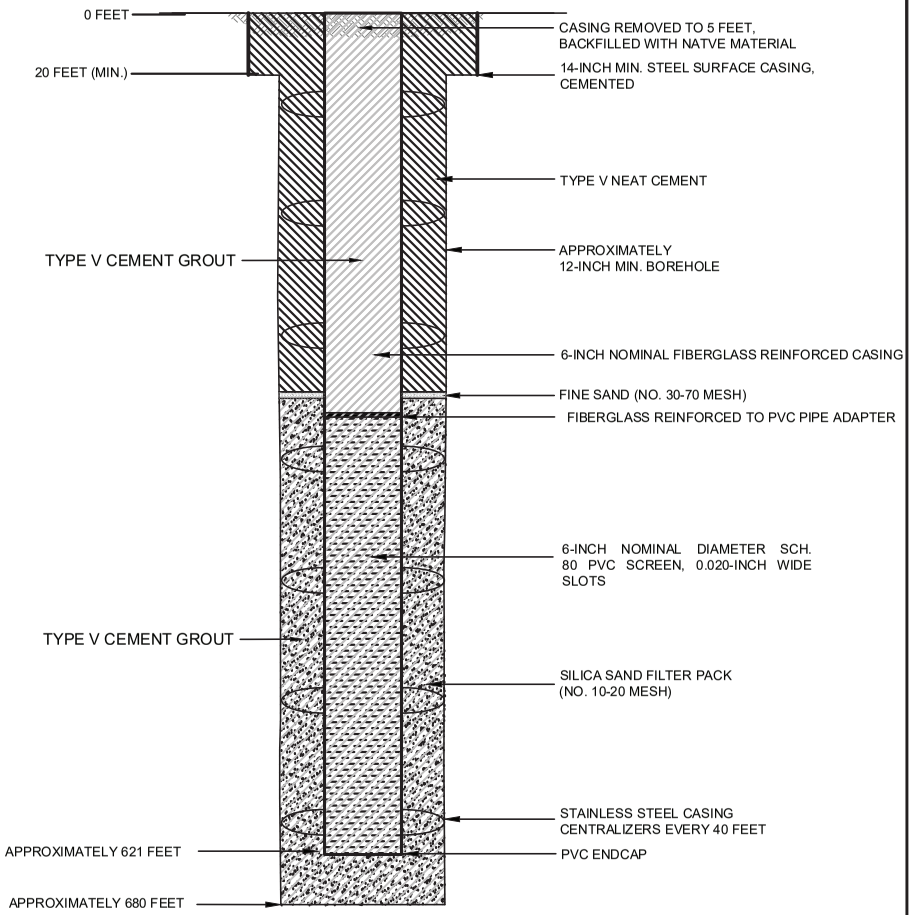

NOTES

1. WELL DESIGN DETAILS ARE BASED ON CORE HOLE AND WELL LOG RECORDS.

HALEY ALDRICH

FLORENCE COPPER, INC.
FLORENCE, ARIZONA

ABANDONMENT SCHEMATIC
OBSERVATION/PERIMETER
WELL P19.1-O

SEPTEMBER 2019
SCALE: AS SHOWN

FIGURE 1

OMB No. 2040-0042 Approval Expires 4/30/2022

United States Environmental Protection Agency

WELL REWORK RECORD, PLUGGING AND ABANDONMENT PLAN, OR PLUGGING AND ABANDONMENT AFFIDAVIT

Name and Address, Phone Number and/or Email of Permittee

Florence Copper Project
1575 W Hunt Hwy,
Florence, AZ 85132

Permit or EPA ID Number	API Number	Full Well Name
R9UIC-AZ3-FY11-1		P19.2-O

State	County
Arizona	Pinal

Locate well in two directions from nearest lines of quarter section and drilling unit

Latitude 33.05377851

Longitude -111.4323354

Surface Location

SE **1/4 of** NW **1/4 of Section** 28 **Township** 4S **Range** 9E

_____ **ft. from (N/S)** _____ **Line of quarter section**

_____ **ft. from (E/W)** _____ **Line of quarter section.**

Well Class	Timing of Action (pick one)	Type of Action (pick one)
☐ Class I ☐ Class II ☑ Class III ☐ Class V	☑ Notice Prior to Work Date Expected to Commence March 2021 ☐ Report After Work Date Work Ended	☐ Well Rework ☑ Plugging and Abandonment ☐ Conversion to a Non-Injection Well

Provide a narrative description of the work planned to be performed, or that was performed. Use additional pages as necessary. See instructions.

A workover rig capable of performing the required abandonment operations at the required depths will be moved in and set up over the well. The well casing will be inspected to determine the depth to which the well remains open and if any obstructions are present in the casing; the presence and condition of any existing surface casing will also be documented. If necessary, the well casing will be cleaned out to the bottom of the deepest screen or perforation to enable placement of cement seals.

If surface casing is present, an attempt will be made to remove it. If removal of the surface casing is not feasible, it will be left in the hole and perforated as needed to allow an annular seal to be placed to a depth of at least 25 feet bgs. In areas of agricultural use, the surface casing will be cut at least 5 feet bgs and removed.

If the surface casing cannot be removed, it will be perforated from at least 20 feet below the bedrock-LBFU contact to at least 20 feet above the contact; from at least 20 feet below the base of the MFGU to at least 20 feet above the top of the MFGU; and from at least 25 feet bgs to 5 feet bgs.

A tremie pipe will be used to place Type V cement in the open well from the bottom of the well casing to the top of the well casing. Cement retainers, as described above, will be used to force cement grout into the annulus and behind perforated screen intervals, as necessary.

If the well casing has been obstructed, as much cement as possible will be placed from 100 feet below the LBFU-bedrock contact to the top of the casing.

The volume of Type V cement will be recorded and will not be less than the estimated volume of material required to fill each interval. All cement grout will consist of Type V cement, or equivalent approved in accordance with the UIC Permit.

Certification

I certify under the penalty of law that I have personally examined and am familiar with the information submitted in this document and all attachments and that, based on my inquiry of those individuals immediately responsible for obtaining the information, I believe that the information is true, accurate, and complete. I am aware that there are significant penalties for submitting false information, including the possibliity of fine and imprisonment. (Ref. 40 CFR § 144.32)

Name and Official Title *(Please type or print)*	Signature	Date Signed
Dan Johnson, VP - General Manager		10/3/2019

INSTRUCTIONS FOR FORM 7520-19

This form replaces forms 7520-12 and 7520-14. Use this form only when work is planned or has occurred that affects the well's construction or operation as an injection well, including work on the casing, tubing or packer (or for shallow Class V wells, the subsurface fluid emplacement network). Use one form per injection well. While reports or other information developed by contractors or service companies may be attached, this form must be signed by a responsible entity as described at 40 CFR 144.32. Note: operators closing Class V wells should use Form 7520-17.

NAME, ADDRESS, PHONE AND/OR EMAIL OF PERMITTEE: Enter the name and street address, city/town, state, and ZIP code of the permittee. Also provide an email address (if available) and/or a phone number.

PERMIT OR EPA ID NUMBER: Enter the well identification number or permit number assigned to the well by the EPA or the permitting authority.

API NUMBER: Enter the number assigned by the local jurisdiction (usually a State Oil and Gas Agency) using the American Petroleum Institute standard numbering system.

FULL WELL NAME: Enter the full name of the well or project.

Enter the **STATE** and **COUNTY** where the well is located. For States that do not have counties, use the name of that State's equivalent jurisdiction at a more local level.

WELL LOCATION: Fill in the complete township, range, and section to the nearest quarter-quarter section. A township is north or south of the baseline, and a range is east or west of the principal meridian (e.g., T12N, R34W). Also include the distance, in feet, from the nearest north or south line and nearest east or west line of the quarter-section. Also, enter the **latitude** and **longitude** of the well in decimal degrees, to five or six places if possible; be sure to include a negative sign for the longitude of a well in the Western Hemisphere and a negative sign for the latitude of a well in the Southern Hemisphere.

Enter the **WELL CLASS,** i.e., the class of injection well as defined in 40 CFR 144.6.

TIMING OF THE ACTION: Check ***Notice prior to work*** if the activity has not yet occurred (i.e., is planned). Check ***Report after work*** if the activity described has already occurred. As appropriate, include the date the activity is expected to start or the date the activity was completed. (Note this may not be available, e.g., for a plugging plan submitted with a permit application.)

TYPE OF ACTION: Check the appropriate box to describe the kind of activity being reported. Check ***Well Rework*** for work that was/will be performed on the well after it has already been in operation as an injection well. Check ***Plugging and Abandonment*** to report on plans for or descriptions of final closure/plugging after use as an injection well. Check ***Conversion to a Non-Injection Well*** if the well is to be converted to something other than an injection well.

Provide a **NARRATIVE DESCRIPTION** of the work planned to be performed, or that was performed. The narrative should include a description of the main procedures planned or that occurred during the work activity. A service company report, daily report, or similar document may be attached if it includes all the requested information and is clear and legible.

For well reworks, include the following information: The reason for the well rework; depths of activity; type of activity; changes to injection well configuration, well casing, or cement behind casing; any plug added to the well and its depth; any newly drilled interval and its depth; method(s) to demonstrate that the well has mechanical integrity (as applicable); and any deviations from the approved rework plan (as applicable).

For a well plugging plan, include the following information: Reason for the well plugging; number of plugs placed, and their depths; materials used as plugs (e.g., cast iron bridge plug, cement, cement retainer); method to set plugs; and wait-on-cement times, if any. Also provide one or more cost estimates from an independent firm in the business of plugging and abandoning wells to plug the well as described in the plan.

For well plugging affidavit, include the following information: Reason for the well plugging; number of plugs placed, and their depths; materials used as plugs (e.g., cast iron bridge plug, cement, cement retainer); method to set plugs; wait-on-cement times, if any; and any deviations from the approved plugging plan (if applicable).

For conversion to a non-injection well, include the following information: Depths of activity; type of activity; changes to injection well configuration, well casing, or cement behind casing; any plug added to the well and its depth; any newly drilled interval and its depth; depths of new perforations; and method(s) to demonstrate that the well has mechanical integrity (as applicable).

For all of the above activities, include a well sketch depicting the work, results of well tests/logging performed, service company tickets, and any other available information demonstrating how the work was/is to be performed. Also, specify whether depths are below ground surface, relative to Kelly bushing, etc.

CERTIFICATION: This form must be signed and dated by either: a responsible corporate officer for a corporation, by a general partner for a partnership, by the proprietor of a sole proprietorship, or by a principal executive or ranking elected official for a public agency.

PAPERWORK REDUCTION ACT NOTICE: The public reporting and recordkeeping burden for this collection of information is estimated to average between 6.0 and 7.9 hours per response, depending on the injection well class. Burden means the total time, effort, or financial resource expended by persons to generate, maintain, retain, or disclose or provide information to or for a Federal Agency. This includes the time needed to review instructions; develop, acquire, install, and utilize technology and systems for the purposes of collecting, validating, and verifying information, processing and maintaining information, and disclosing and providing information; adjust the existing ways to comply with any previously applicable instructions and requirements; train personnel to be able to respond to the collection of information; search data sources; complete and review the collection of information; and, transmit or otherwise disclose the information. An agency may not conduct or sponsor, and a person is not required to respond to, a collection of information unless it displays a currently valid OMB control number. Send comments on the Agency's need for this information, the accuracy of the provided burden estimates, and any suggested methods for minimizing respondent burden, including the use of automated collection techniques to Director, Collection Strategies Division, U.S. Environmental Protection Agency (2822), 1200 Pennsylvania Ave., NW., Washington, D.C. 20460. Include the OMB control number in any correspondence. Do not send the completed forms to this address.

Saved by: MNICHOLLS Printed: 7/25/2019 7:20 PM Sheet: HA-FIG-A-L(2)
\\HALEYALDRICH.COM\SHARE\PHX_COMMON\PROJECTS\FLORENCE COPPER\132473 FLORENCE GROUNDWATER PERMITTING\CAD\132473_000-OBSERVATION_WELL_CONSTRUCTION DIAGRAM.DWG

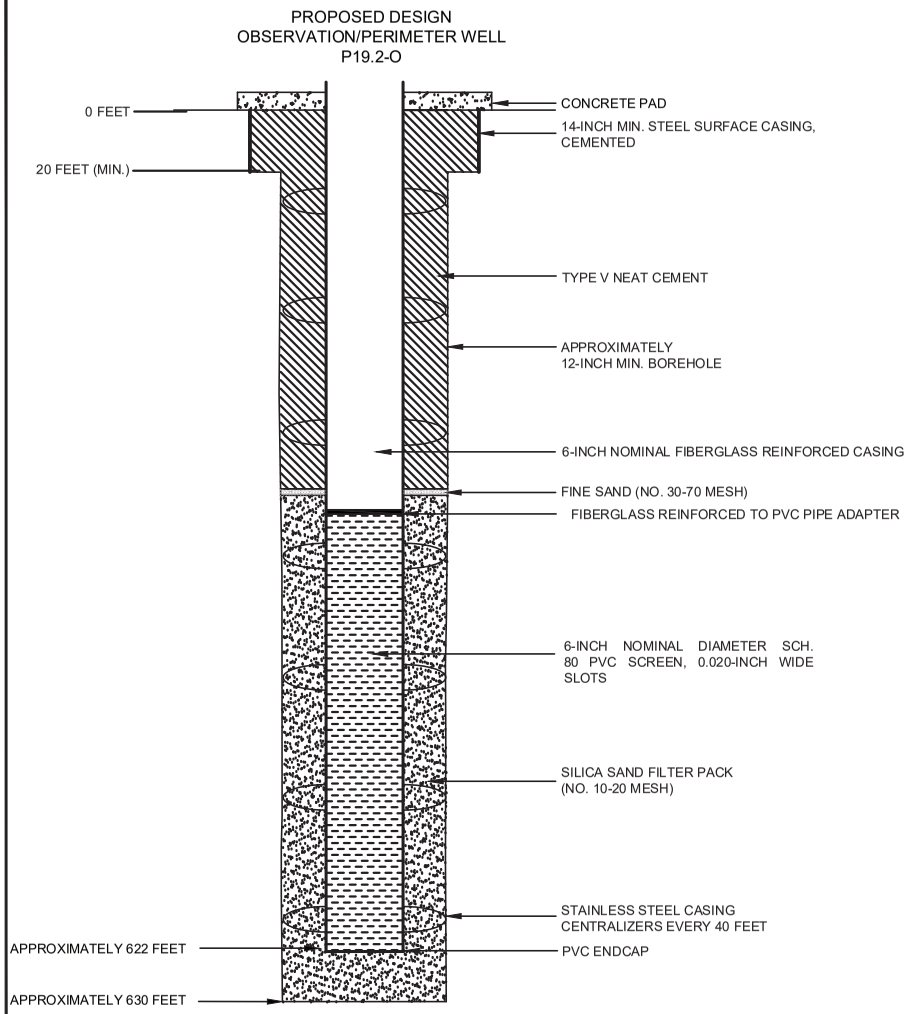

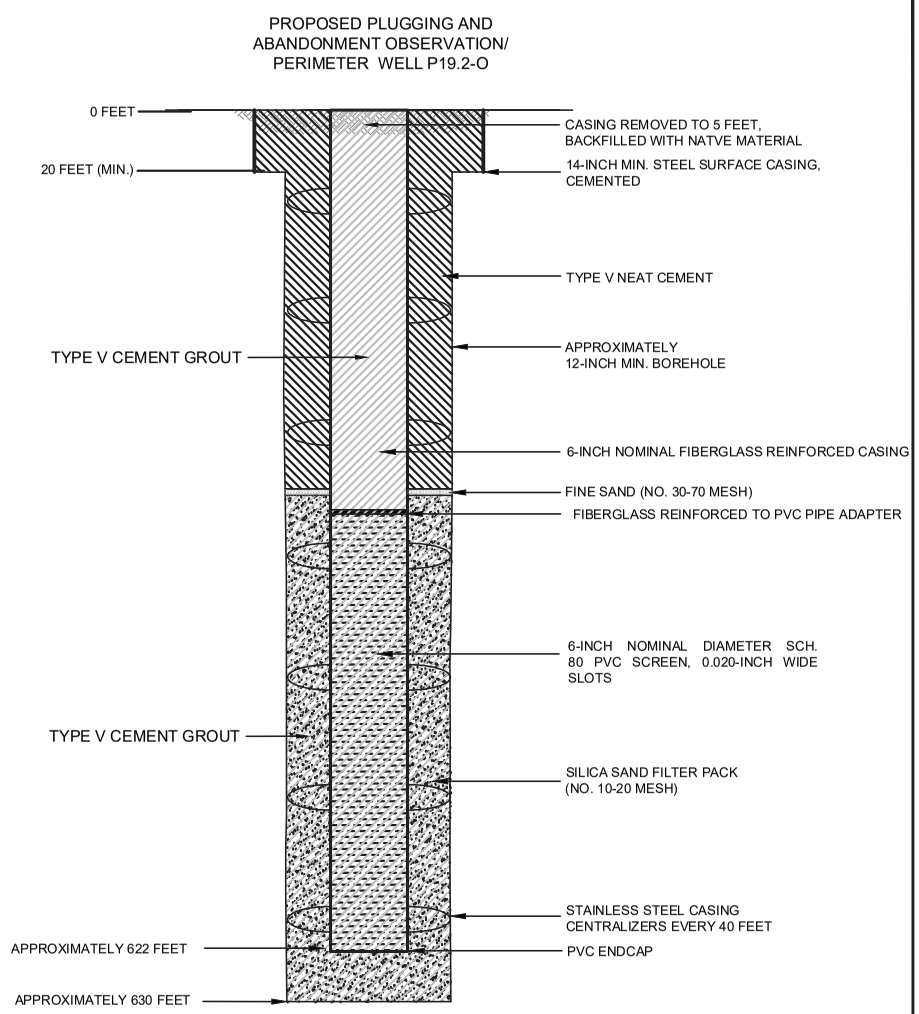

NOTES

1. WELL DESIGN DETAILS ARE BASED ON CORE HOLE AND WELL LOG RECORDS.

HALEY ALDRICH

FLORENCE COPPER, INC.
FLORENCE, ARIZONA

ABANDONMENT SCHEMATIC
OBSERVATION/PERIMETER
WELL P19.2-O

SEPTEMBER 2019
SCALE: AS SHOWN

FIGURE 1

OMB No. 2040-0042 Approval Expires 4/30/2022

United States Environmental Protection Agency

WELL REWORK RECORD, PLUGGING AND ABANDONMENT PLAN, OR PLUGGING AND ABANDONMENT AFFIDAVIT

Name and Address, Phone Number and/or Email of Permittee

Florence Copper Project
1575 W Hunt Hwy,
Florence, AZ 85132

Permit or EPA ID Number	API Number	Full Well Name
R9UIC-AZ3-FY11-1		P28.1-O

State	County
Arizona	Pinal

Locate well in two directions from nearest lines of quarter section and drilling unit

Latitude 33.04864642

Surface Location

SE **1/4 of** SE **1/4 of Section** 28 **Township** 4S **Range** 9E

Longitude -111.4238744

_____ **ft. from (N/S)** _____ **Line of quarter section**

_____ **ft. from (E/W)** _____ **Line of quarter section.**

Well Class	Timing of Action (pick one)	Type of Action (pick one)
☐ Class I ☐ Class II ☑ Class III ☐ Class V	☑ Notice Prior to Work Date Expected to Commence March 2021 ☐ Report After Work Date Work Ended	☐ Well Rework ☑ Plugging and Abandonment ☐ Conversion to a Non-Injection Well

Provide a narrative description of the work planned to be performed, or that was performed. Use additional pages as necessary. See instructions.

A workover rig capable of performing the required abandonment operations at the required depths will be moved in and set up over the well. The well casing will be inspected to determine the depth to which the well remains open and if any obstructions are present in the casing; the presence and condition of any existing surface casing will also be documented. If necessary, the well casing will be cleaned out to the bottom of the deepest screen or perforation to enable placement of cement seals.

If surface casing is present, an attempt will be made to remove it. If removal of the surface casing is not feasible, it will be left in the hole and perforated as needed to allow an annular seal to be placed to a depth of at least 25 feet bgs. In areas of agricultural use, the surface casing will be cut at least 5 feet bgs and removed.

If the surface casing cannot be removed, it will be perforated from at least 20 feet below the bedrock-LBFU contact to at least 20 feet above the contact; from at least 20 feet below the base of the MFGU to at least 20 feet above the top of the MFGU; and from at least 25 feet bgs to 5 feet bgs.

A tremie pipe will be used to place Type V cement in the open well from the bottom of the well casing to the top of the well casing. Cement retainers, as described above, will be used to force cement grout into the annulus and behind perforated screen intervals, as necessary.

If the well casing has been obstructed, as much cement as possible will be placed from 100 feet below the LBFU-bedrock contact to the top of the casing.

The volume of Type V cement will be recorded and will not be less than the estimated volume of material required to fill each interval. All cement grout will consist of Type V cement, or equivalent approved in accordance with the UIC Permit.

Certification

I certify under the penalty of law that I have personally examined and am familiar with the information submitted in this document and all attachments and that, based on my inquiry of those individuals immediately responsible for obtaining the information, I believe that the information is true, accurate, and complete. I am aware that there are significant penalties for submitting false information, including the possibliity of fine and imprisonment. (Ref. 40 CFR § 144.32)

Name and Official Title *(Please type or print)*	Signature	Date Signed
Dan Johnson, VP - General Manager		10/3/2019

INSTRUCTIONS FOR FORM 7520-19

This form replaces forms 7520-12 and 7520-14. Use this form only when work is planned or has occurred that affects the well's construction or operation as an injection well, including work on the casing, tubing or packer (or for shallow Class V wells, the subsurface fluid emplacement network). Use one form per injection well. While reports or other information developed by contractors or service companies may be attached, this form must be signed by a responsible entity as described at 40 CFR 144.32. Note: operators closing Class V wells should use Form 7520-17.

NAME, ADDRESS, PHONE AND/OR EMAIL OF PERMITTEE: Enter the name and street address, city/town, state, and ZIP code of the permittee. Also provide an email address (if available) and/or a phone number.

PERMIT OR EPA ID NUMBER: Enter the well identification number or permit number assigned to the well by the EPA or the permitting authority.

API NUMBER: Enter the number assigned by the local jurisdiction (usually a State Oil and Gas Agency) using the American Petroleum Institute standard numbering system.

FULL WELL NAME: Enter the full name of the well or project.

Enter the **STATE** and **COUNTY** where the well is located. For States that do not have counties, use the name of that State's equivalent jurisdiction at a more local level.

WELL LOCATION: Fill in the complete township, range, and section to the nearest quarter-quarter section. A township is north or south of the baseline, and a range is east or west of the principal meridian (e.g., T12N, R34W). Also include the distance, in feet, from the nearest north or south line and nearest east or west line of the quarter-section. Also, enter the **latitude** and **longitude** of the well in decimal degrees, to five or six places if possible; be sure to include a negative sign for the longitude of a well in the Western Hemisphere and a negative sign for the latitude of a well in the Southern Hemisphere.

Enter the **WELL CLASS,** i.e., the class of injection well as defined in 40 CFR 144.6.

TIMING OF THE ACTION: Check ***Notice prior to work*** if the activity has not yet occurred (i.e., is planned). Check ***Report after work*** if the activity described has already occurred. As appropriate, include the date the activity is expected to start or the date the activity was completed. (Note this may not be available, e.g., for a plugging plan submitted with a permit application.)

TYPE OF ACTION: Check the appropriate box to describe the kind of activity being reported. Check ***Well Rework*** for work that was/will be performed on the well after it has already been in operation as an injection well. Check ***Plugging and Abandonment*** to report on plans for or descriptions of final closure/plugging after use as an injection well. Check ***Conversion to a Non-Injection Well*** if the well is to be converted to something other than an injection well.

Provide a **NARRATIVE DESCRIPTION** of the work planned to be performed, or that was performed. The narrative should include a description of the main procedures planned or that occurred during the work activity. A service company report, daily report, or similar document may be attached if it includes all the requested information and is clear and legible.

For well reworks, include the following information: The reason for the well rework; depths of activity; type of activity; changes to injection well configuration, well casing, or cement behind casing; any plug added to the well and its depth; any newly drilled interval and its depth; method(s) to demonstrate that the well has mechanical integrity (as applicable); and any deviations from the approved rework plan (as applicable).

For a well plugging plan, include the following information: Reason for the well plugging; number of plugs placed, and their depths; materials used as plugs (e.g., cast iron bridge plug, cement, cement retainer); method to set plugs; and wait-on-cement times, if any. Also provide one or more cost estimates from an independent firm in the business of plugging and abandoning wells to plug the well as described in the plan.

For well plugging affidavit, include the following information: Reason for the well plugging; number of plugs placed, and their depths; materials used as plugs (e.g., cast iron bridge plug, cement, cement retainer); method to set plugs; wait-on-cement times, if any; and any deviations from the approved plugging plan (if applicable).

For conversion to a non-injection well, include the following information: Depths of activity; type of activity; changes to injection well configuration, well casing, or cement behind casing; any plug added to the well and its depth; any newly drilled interval and its depth; depths of new perforations; and method(s) to demonstrate that the well has mechanical integrity (as applicable).

For all of the above activities, include a well sketch depicting the work, results of well tests/logging performed, service company tickets, and any other available information demonstrating how the work was/is to be performed. Also, specify whether depths are below ground surface, relative to Kelly bushing, etc.

CERTIFICATION: This form must be signed and dated by either: a responsible corporate officer for a corporation, by a general partner for a partnership, by the proprietor of a sole proprietorship, or by a principal executive or ranking elected official for a public agency.

PAPERWORK REDUCTION ACT NOTICE: The public reporting and recordkeeping burden for this collection of information is estimated to average between 6.0 and 7.9 hours per response, depending on the injection well class. Burden means the total time, effort, or financial resource expended by persons to generate, maintain, retain, or disclose or provide information to or for a Federal Agency. This includes the time needed to review instructions; develop, acquire, install, and utilize technology and systems for the purposes of collecting, validating, and verifying information, processing and maintaining information, and disclosing and providing information; adjust the existing ways to comply with any previously applicable instructions and requirements; train personnel to be able to respond to the collection of information; search data sources; complete and review the collection of information; and, transmit or otherwise disclose the information. An agency may not conduct or sponsor, and a person is not required to respond to, a collection of information unless it displays a currently valid OMB control number. Send comments on the Agency's need for this information, the accuracy of the provided burden estimates, and any suggested methods for minimizing respondent burden, including the use of automated collection techniques to Director, Collection Strategies Division, U.S. Environmental Protection Agency (2822), 1200 Pennsylvania Ave., NW., Washington, D.C. 20460. Include the OMB control number in any correspondence. Do not send the completed forms to this address.

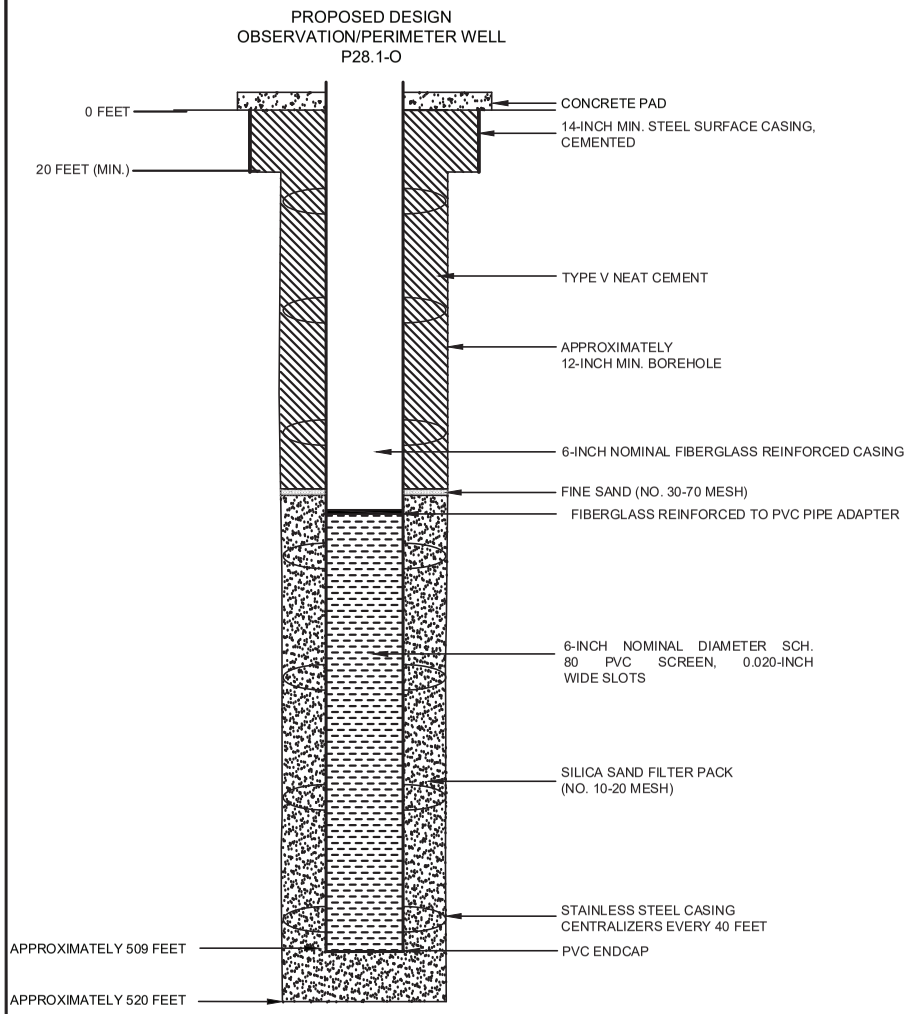

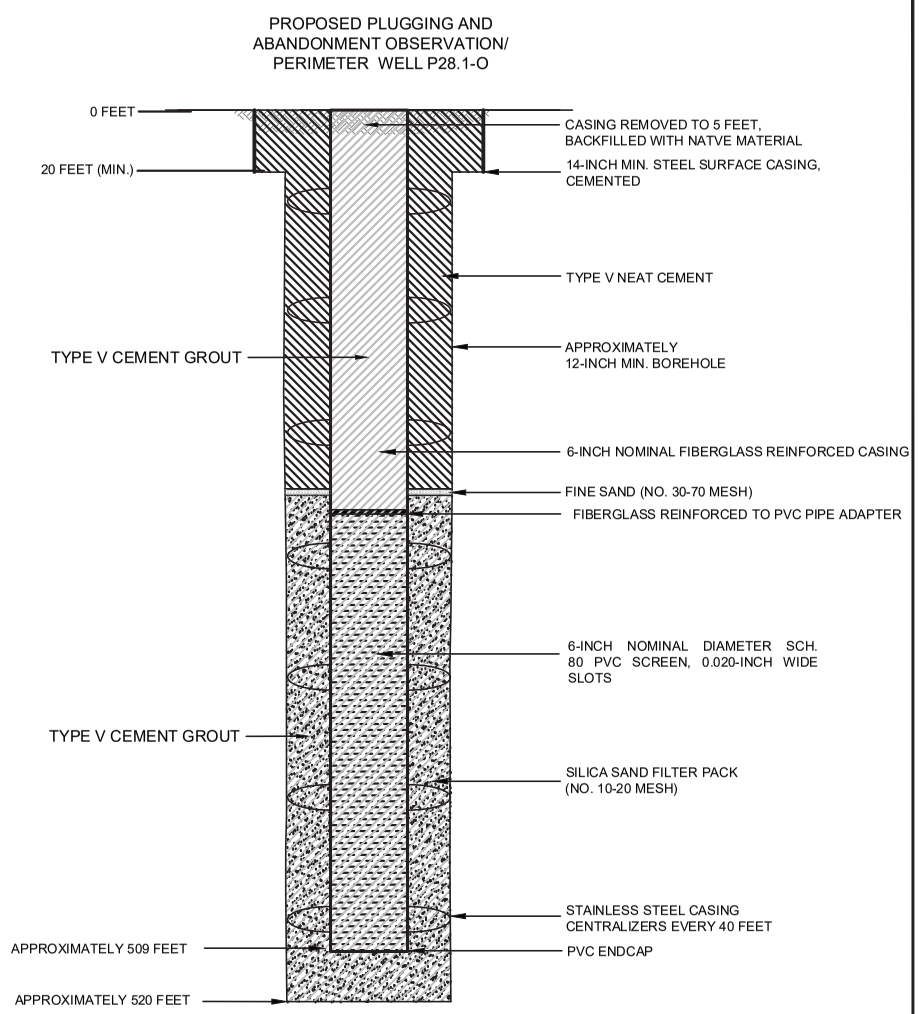

NOTES

1. WELL DESIGN DETAILS ARE BASED ON CORE HOLE AND WELL LOG RECORDS.

HALEY ALDRICH

FLORENCE COPPER, INC.
FLORENCE, ARIZONA

ABANDONMENT SCHEMATIC
OBSERVATION/PERIMETER
WELL P28.1-O

SEPTEMBER 2019
SCALE: AS SHOWN

FIGURE 1

OMB No. 2040-0042 Approval Expires 4/30/2022

United States Environmental Protection Agency

WELL REWORK RECORD, PLUGGING AND ABANDONMENT PLAN, OR PLUGGING AND ABANDONMENT AFFIDAVIT

Name and Address, Phone Number and/or Email of Permittee

Florence Copper Project
1575 W Hunt Hwy,
Florence, AZ 85132

Permit or EPA ID Number	API Number	Full Well Name
R9UIC-AZ3-FY11-1		P28.2-O

State	County
Arizona	Pinal

Locate well in two directions from nearest lines of quarter section and drilling unit

Latitude 33.04852861

Longitude -111.4234837

Surface Location

SE **1/4 of** SE **1/4 of Section** 28 **Township** 4S **Range** 9E

_____ **ft. from (N/S)** _____ **Line of quarter section**

_____ **ft. from (E/W)** _____ **Line of quarter section.**

Well Class	Timing of Action (pick one)	Type of Action (pick one)
☐ Class I ☐ Class II ☑ Class III ☐ Class V	☑ Notice Prior to Work Date Expected to Commence March 2021 ☐ Report After Work Date Work Ended	☐ Well Rework ☑ Plugging and Abandonment ☐ Conversion to a Non-Injection Well

Provide a narrative description of the work planned to be performed, or that was performed. Use additional pages as necessary. See instructions.

A workover rig capable of performing the required abandonment operations at the required depths will be moved in and set up over the well. The well casing will be inspected to determine the depth to which the well remains open and if any obstructions are present in the casing; the presence and condition of any existing surface casing will also be documented. If necessary, the well casing will be cleaned out to the bottom of the deepest screen or perforation to enable placement of cement seals.

If surface casing is present, an attempt will be made to remove it. If removal of the surface casing is not feasible, it will be left in the hole and perforated as needed to allow an annular seal to be placed to a depth of at least 25 feet bgs. In areas of agricultural use, the surface casing will be cut at least 5 feet bgs and removed.

If the surface casing cannot be removed, it will be perforated from at least 20 feet below the bedrock-LBFU contact to at least 20 feet above the contact; from at least 20 feet below the base of the MFGU to at least 20 feet above the top of the MFGU; and from at least 25 feet bgs to 5 feet bgs.

A tremie pipe will be used to place Type V cement in the open well from the bottom of the well casing to the top of the well casing. Cement retainers, as described above, will be used to force cement grout into the annulus and behind perforated screen intervals, as necessary.

If the well casing has been obstructed, as much cement as possible will be placed from 100 feet below the LBFU-bedrock contact to the top of the casing.

The volume of Type V cement will be recorded and will not be less than the estimated volume of material required to fill each interval. All cement grout will consist of Type V cement, or equivalent approved in accordance with the UIC Permit.

Certification

I certify under the penalty of law that I have personally examined and am familiar with the information submitted in this document and all attachments and that, based on my inquiry of those individuals immediately responsible for obtaining the information, I believe that the information is true, accurate, and complete. I am aware that there are significant penalties for submitting false information, including the possibliity of fine and imprisonment. (Ref. 40 CFR § 144.32)

Name and Official Title *(Please type or print)*	Signature	Date Signed
Dan Johnson, VP - General Manager		10/3/2019

INSTRUCTIONS FOR FORM 7520-19

This form replaces forms 7520-12 and 7520-14. Use this form only when work is planned or has occurred that affects the well's construction or operation as an injection well, including work on the casing, tubing or packer (or for shallow Class V wells, the subsurface fluid emplacement network). Use one form per injection well. While reports or other information developed by contractors or service companies may be attached, this form must be signed by a responsible entity as described at 40 CFR 144.32. Note: operators closing Class V wells should use Form 7520-17.

NAME, ADDRESS, PHONE AND/OR EMAIL OF PERMITTEE: Enter the name and street address, city/town, state, and ZIP code of the permittee. Also provide an email address (if available) and/or a phone number.

PERMIT OR EPA ID NUMBER: Enter the well identification number or permit number assigned to the well by the EPA or the permitting authority.

API NUMBER: Enter the number assigned by the local jurisdiction (usually a State Oil and Gas Agency) using the American Petroleum Institute standard numbering system.

FULL WELL NAME: Enter the full name of the well or project.

Enter the **STATE** and **COUNTY** where the well is located. For States that do not have counties, use the name of that State's equivalent jurisdiction at a more local level.

WELL LOCATION: Fill in the complete township, range, and section to the nearest quarter-quarter section. A township is north or south of the baseline, and a range is east or west of the principal meridian (e.g., T12N, R34W). Also include the distance, in feet, from the nearest north or south line and nearest east or west line of the quarter-section. Also, enter the **latitude** and **longitude** of the well in decimal degrees, to five or six places if possible; be sure to include a negative sign for the longitude of a well in the Western Hemisphere and a negative sign for the latitude of a well in the Southern Hemisphere.

Enter the **WELL CLASS,** i.e., the class of injection well as defined in 40 CFR 144.6.

TIMING OF THE ACTION: Check ***Notice prior to work*** if the activity has not yet occurred (i.e., is planned). Check ***Report after work*** if the activity described has already occurred. As appropriate, include the date the activity is expected to start or the date the activity was completed. (Note this may not be available, e.g., for a plugging plan submitted with a permit application.)

TYPE OF ACTION: Check the appropriate box to describe the kind of activity being reported. Check ***Well Rework*** for work that was/will be performed on the well after it has already been in operation as an injection well. Check ***Plugging and Abandonment*** to report on plans for or descriptions of final closure/plugging after use as an injection well. Check ***Conversion to a Non-Injection Well*** if the well is to be converted to something other than an injection well.

Provide a **NARRATIVE DESCRIPTION** of the work planned to be performed, or that was performed. The narrative should include a description of the main procedures planned or that occurred during the work activity. A service company report, daily report, or similar document may be attached if it includes all the requested information and is clear and legible.

For well reworks, include the following information: The reason for the well rework; depths of activity; type of activity; changes to injection well configuration, well casing, or cement behind casing; any plug added to the well and its depth; any newly drilled interval and its depth; method(s) to demonstrate that the well has mechanical integrity (as applicable); and any deviations from the approved rework plan (as applicable).

For a well plugging plan, include the following information: Reason for the well plugging; number of plugs placed, and their depths; materials used as plugs (e.g., cast iron bridge plug, cement, cement retainer); method to set plugs; and wait-on-cement times, if any. Also provide one or more cost estimates from an independent firm in the business of plugging and abandoning wells to plug the well as described in the plan.

For well plugging affidavit, include the following information: Reason for the well plugging; number of plugs placed, and their depths; materials used as plugs (e.g., cast iron bridge plug, cement, cement retainer); method to set plugs; wait-on-cement times, if any; and any deviations from the approved plugging plan (if applicable).

For conversion to a non-injection well, include the following information: Depths of activity; type of activity; changes to injection well configuration, well casing, or cement behind casing; any plug added to the well and its depth; any newly drilled interval and its depth; depths of new perforations; and method(s) to demonstrate that the well has mechanical integrity (as applicable).

For all of the above activities, include a well sketch depicting the work, results of well tests/logging performed, service company tickets, and any other available information demonstrating how the work was/is to be performed. Also, specify whether depths are below ground surface, relative to Kelly bushing, etc.

CERTIFICATION: This form must be signed and dated by either: a responsible corporate officer for a corporation, by a general partner for a partnership, by the proprietor of a sole proprietorship, or by a principal executive or ranking elected official for a public agency.

PAPERWORK REDUCTION ACT NOTICE: The public reporting and recordkeeping burden for this collection of information is estimated to average between 6.0 and 7.9 hours per response, depending on the injection well class. Burden means the total time, effort, or financial resource expended by persons to generate, maintain, retain, or disclose or provide information to or for a Federal Agency. This includes the time needed to review instructions; develop, acquire, install, and utilize technology and systems for the purposes of collecting, validating, and verifying information, processing and maintaining information, and disclosing and providing information; adjust the existing ways to comply with any previously applicable instructions and requirements; train personnel to be able to respond to the collection of information; search data sources; complete and review the collection of information; and, transmit or otherwise disclose the information. An agency may not conduct or sponsor, and a person is not required to respond to, a collection of information unless it displays a currently valid OMB control number. Send comments on the Agency's need for this information, the accuracy of the provided burden estimates, and any suggested methods for minimizing respondent burden, including the use of automated collection techniques to Director, Collection Strategies Division, U.S. Environmental Protection Agency (2822), 1200 Pennsylvania Ave., NW., Washington, D.C. 20460. Include the OMB control number in any correspondence. Do not send the completed forms to this address.

Saved by: MNICHOLLS Printed: 7/25/2019 7:20 PM Sheet: HA-FIG-A-L(2)
\\HALEYALDRICH.COM\SHARE\PHX_COMMON\PROJECTS\FLORENCE COPPER\132473 FLORENCE GROUNDWATER PERMITTING\CAD\132473_000-OBSERVATION_WELL_CONSTRUCTION DIAGRAM.DWG

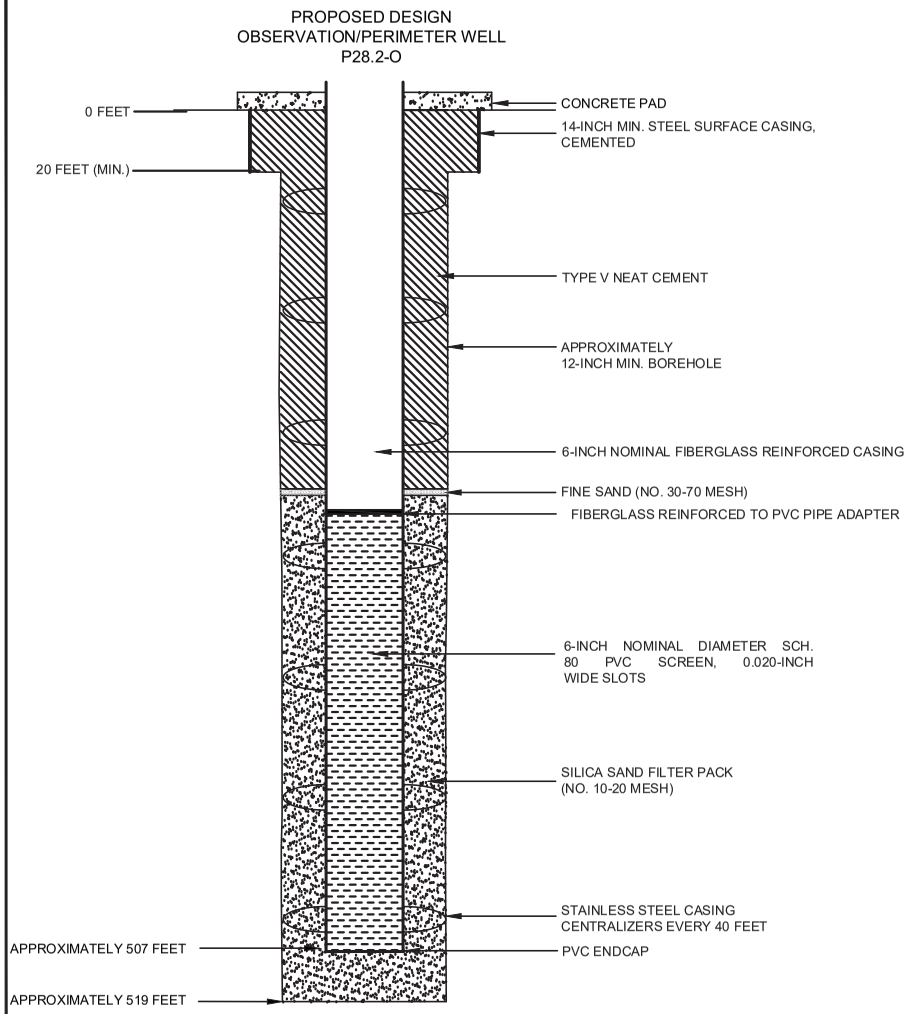

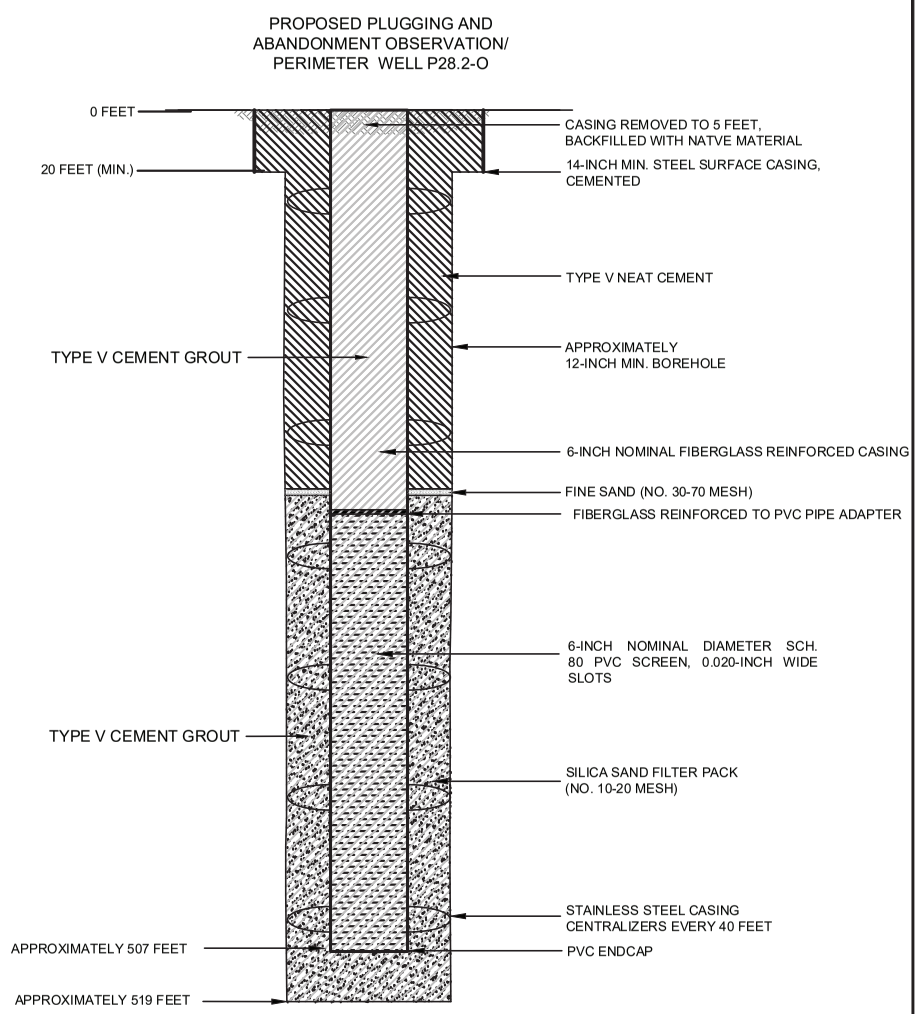

NOTES

1. WELL DESIGN DETAILS ARE BASED ON CORE HOLE AND WELL LOG RECORDS.

HALEY ALDRICH

FLORENCE COPPER, INC.
FLORENCE, ARIZONA

ABANDONMENT SCHEMATIC
OBSERVATION/PERIMETER
WELL P28.2-O

SEPTEMBER 2019
SCALE: AS SHOWN

FIGURE 1

OMB No. 2040-0042 Approval Expires 4/30/2022

United States Environmental Protection Agency

WELL REWORK RECORD, PLUGGING AND ABANDONMENT PLAN, OR PLUGGING AND ABANDONMENT AFFIDAVIT

Name and Address, Phone Number and/or Email of Permittee

Florence Copper Project
1575 W Hunt Hwy,
Florence, AZ 85132

Permit or EPA ID Number	API Number	Full Well Name
R9UIC-AZ3-FY11-1		P28-GL

State	County
Arizona	Pinal

Locate well in two directions from nearest lines of quarter section and drilling unit

Latitude 33.0485829

Longitude -111.4235895

Surface Location

SE **1/4 of** SE **1/4 of Section** 28 **Township** 4S **Range** 9E

_____ **ft. from (N/S)** _____ **Line of quarter section**

_____ **ft. from (E/W)** _____ **Line of quarter section.**

Well Class	Timing of Action (pick one)	Type of Action (pick one)
☐ Class I ☐ Class II ☑ Class III ☐ Class V	☑ Notice Prior to Work Date Expected to Commence March 2021 ☐ Report After Work Date Work Ended	☐ Well Rework ☑ Plugging and Abandonment ☐ Conversion to a Non-Injection Well

Provide a narrative description of the work planned to be performed, or that was performed. Use additional pages as necessary. See instructions.

A workover rig capable of performing the required abandonment operations at the required depths will be moved in and set up over the well. The well casing will be inspected to determine the depth to which the well remains open and if any obstructions are present in the casing; the presence and condition of any existing surface casing will also be documented. If necessary, the well casing will be cleaned out to the bottom of the deepest screen or perforation to enable placement of cement seals.

If surface casing is present, an attempt will be made to remove it. If removal of the surface casing is not feasible, it will be left in the hole and perforated as needed to allow an annular seal to be placed to a depth of at least 25 feet bgs. In areas of agricultural use, the surface casing will be cut at least 5 feet bgs and removed.

If the surface casing cannot be removed, it will be perforated from at least 20 feet below the bedrock-LBFU contact to at least 20 feet above the contact; from at least 20 feet below the base of the MFGU to at least 20 feet above the top of the MFGU; and from at least 25 feet bgs to 5 feet bgs.

A tremie pipe will be used to place Type V cement in the open well from the bottom of the well casing to the top of the well casing. Cement retainers, as described above, will be used to force cement grout into the annulus and behind perforated screen intervals, as necessary.

If the well casing has been obstructed, as much cement as possible will be placed from 100 feet below the LBFU-bedrock contact to the top of the casing.

The volume of Type V cement will be recorded and will not be less than the estimated volume of material required to fill each interval. All cement grout will consist of Type V cement, or equivalent approved in accordance with the UIC Permit.

Certification

I certify under the penalty of law that I have personally examined and am familiar with the information submitted in this document and all attachments and that, based on my inquiry of those individuals immediately responsible for obtaining the information, I believe that the information is true, accurate, and complete. I am aware that there are significant penalties for submitting false information, including the possibliity of fine and imprisonment. (Ref. 40 CFR § 144.32)

Name and Official Title *(Please type or print)*	Signature	Date Signed
Dan Johnson, VP - General Manager		10/3/2019

INSTRUCTIONS FOR FORM 7520-19

This form replaces forms 7520-12 and 7520-14. Use this form only when work is planned or has occurred that affects the well's construction or operation as an injection well, including work on the casing, tubing or packer (or for shallow Class V wells, the subsurface fluid emplacement network). Use one form per injection well. While reports or other information developed by contractors or service companies may be attached, this form must be signed by a responsible entity as described at 40 CFR 144.32. Note: operators closing Class V wells should use Form 7520-17.

NAME, ADDRESS, PHONE AND/OR EMAIL OF PERMITTEE: Enter the name and street address, city/town, state, and ZIP code of the permittee. Also provide an email address (if available) and/or a phone number.

PERMIT OR EPA ID NUMBER: Enter the well identification number or permit number assigned to the well by the EPA or the permitting authority.

API NUMBER: Enter the number assigned by the local jurisdiction (usually a State Oil and Gas Agency) using the American Petroleum Institute standard numbering system.

FULL WELL NAME: Enter the full name of the well or project.

Enter the **STATE** and **COUNTY** where the well is located. For States that do not have counties, use the name of that State's equivalent jurisdiction at a more local level.

WELL LOCATION: Fill in the complete township, range, and section to the nearest quarter-quarter section. A township is north or south of the baseline, and a range is east or west of the principal meridian (e.g., T12N, R34W). Also include the distance, in feet, from the nearest north or south line and nearest east or west line of the quarter-section. Also, enter the **latitude** and **longitude** of the well in decimal degrees, to five or six places if possible; be sure to include a negative sign for the longitude of a well in the Western Hemisphere and a negative sign for the latitude of a well in the Southern Hemisphere.

Enter the **WELL CLASS,** i.e., the class of injection well as defined in 40 CFR 144.6.

TIMING OF THE ACTION: Check ***Notice prior to work*** if the activity has not yet occurred (i.e., is planned). Check ***Report after work*** if the activity described has already occurred. As appropriate, include the date the activity is expected to start or the date the activity was completed. (Note this may not be available, e.g., for a plugging plan submitted with a permit application.)

TYPE OF ACTION: Check the appropriate box to describe the kind of activity being reported. Check ***Well Rework*** for work that was/will be performed on the well after it has already been in operation as an injection well. Check ***Plugging and Abandonment*** to report on plans for or descriptions of final closure/plugging after use as an injection well. Check ***Conversion to a Non-Injection Well*** if the well is to be converted to something other than an injection well.

Provide a **NARRATIVE DESCRIPTION** of the work planned to be performed, or that was performed. The narrative should include a description of the main procedures planned or that occurred during the work activity. A service company report, daily report, or similar document may be attached if it includes all the requested information and is clear and legible.

For well reworks, include the following information: The reason for the well rework; depths of activity; type of activity; changes to injection well configuration, well casing, or cement behind casing; any plug added to the well and its depth; any newly drilled interval and its depth; method(s) to demonstrate that the well has mechanical integrity (as applicable); and any deviations from the approved rework plan (as applicable).

For a well plugging plan, include the following information: Reason for the well plugging; number of plugs placed, and their depths; materials used as plugs (e.g., cast iron bridge plug, cement, cement retainer); method to set plugs; and wait-on-cement times, if any. Also provide one or more cost estimates from an independent firm in the business of plugging and abandoning wells to plug the well as described in the plan.

For well plugging affidavit, include the following information: Reason for the well plugging; number of plugs placed, and their depths; materials used as plugs (e.g., cast iron bridge plug, cement, cement retainer); method to set plugs; wait-on-cement times, if any; and any deviations from the approved plugging plan (if applicable).

For conversion to a non-injection well, include the following information: Depths of activity; type of activity; changes to injection well configuration, well casing, or cement behind casing; any plug added to the well and its depth; any newly drilled interval and its depth; depths of new perforations; and method(s) to demonstrate that the well has mechanical integrity (as applicable).

For all of the above activities, include a well sketch depicting the work, results of well tests/logging performed, service company tickets, and any other available information demonstrating how the work was/is to be performed. Also, specify whether depths are below ground surface, relative to Kelly bushing, etc.

CERTIFICATION: This form must be signed and dated by either: a responsible corporate officer for a corporation, by a general partner for a partnership, by the proprietor of a sole proprietorship, or by a principal executive or ranking elected official for a public agency.

PAPERWORK REDUCTION ACT NOTICE: The public reporting and recordkeeping burden for this collection of information is estimated to average between 6.0 and 7.9 hours per response, depending on the injection well class. Burden means the total time, effort, or financial resource expended by persons to generate, maintain, retain, or disclose or provide information to or for a Federal Agency. This includes the time needed to review instructions; develop, acquire, install, and utilize technology and systems for the purposes of collecting, validating, and verifying information, processing and maintaining information, and disclosing and providing information; adjust the existing ways to comply with any previously applicable instructions and requirements; train personnel to be able to respond to the collection of information; search data sources; complete and review the collection of information; and, transmit or otherwise disclose the information. An agency may not conduct or sponsor, and a person is not required to respond to, a collection of information unless it displays a currently valid OMB control number. Send comments on the Agency's need for this information, the accuracy of the provided burden estimates, and any suggested methods for minimizing respondent burden, including the use of automated collection techniques to Director, Collection Strategies Division, U.S. Environmental Protection Agency (2822), 1200 Pennsylvania Ave., NW., Washington, D.C. 20460. Include the OMB control number in any correspondence. Do not send the completed forms to this address.

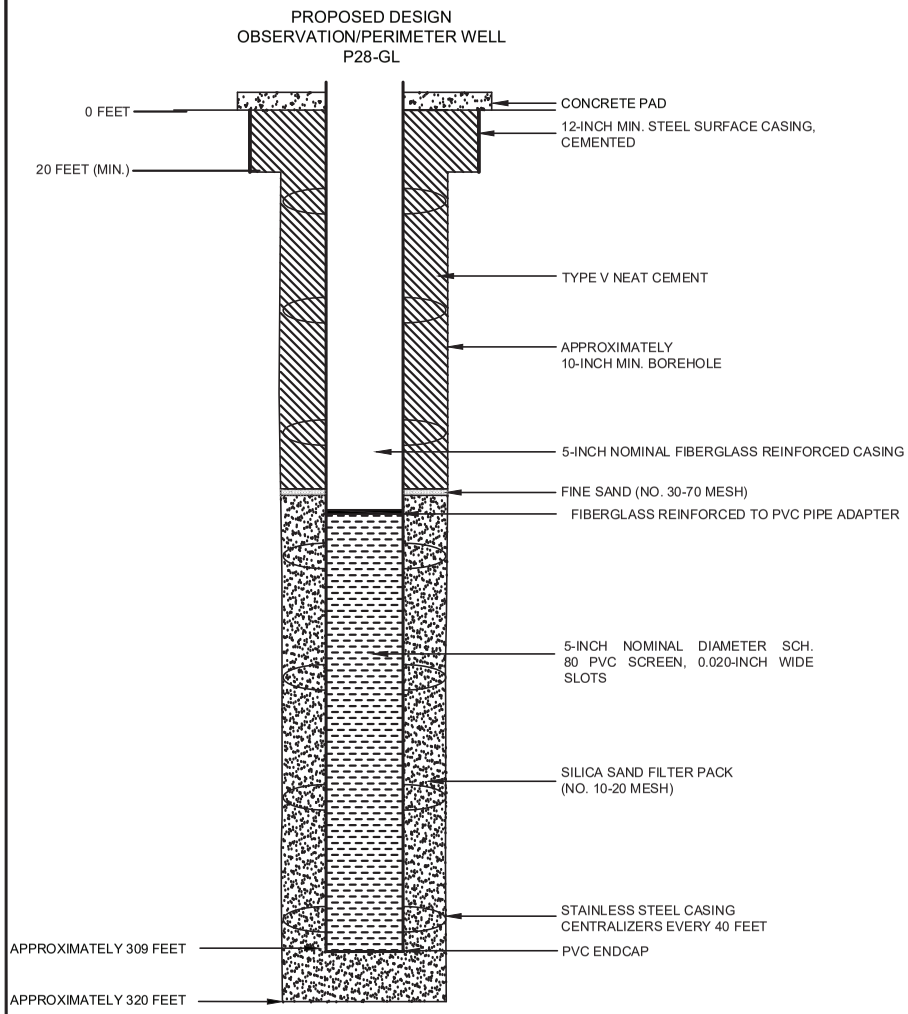

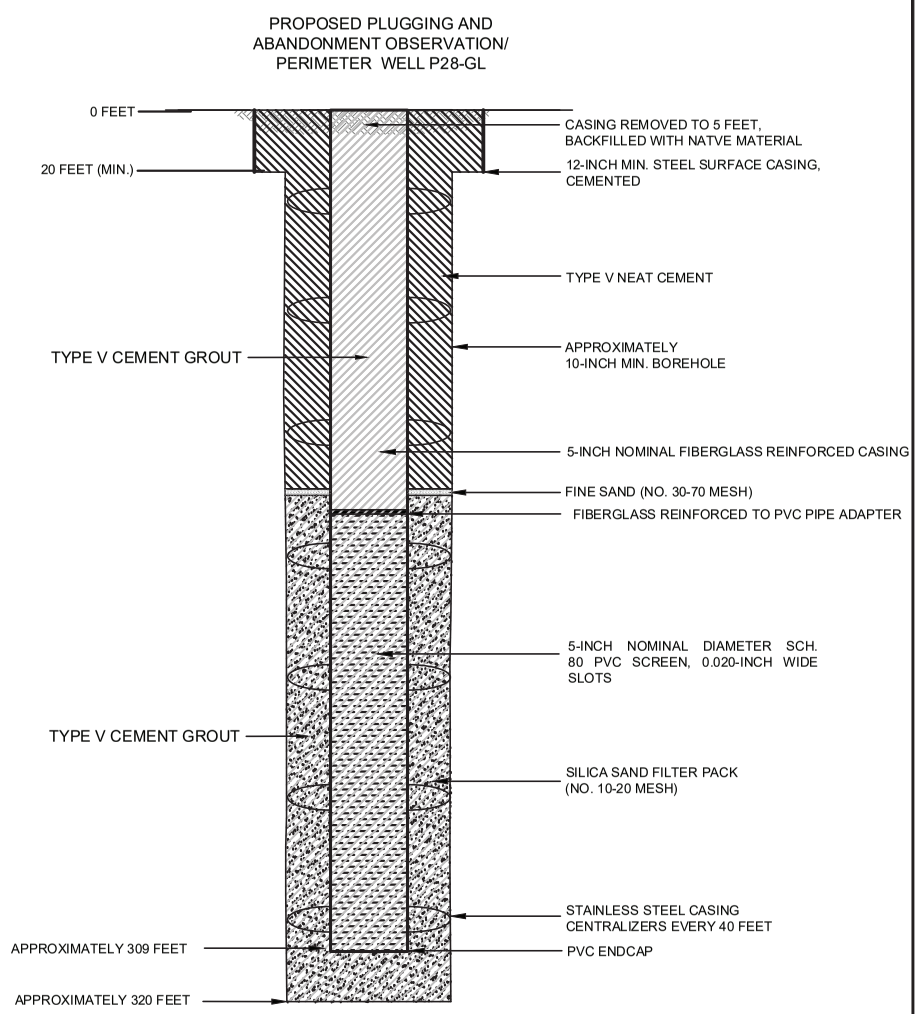

NOTES

1. WELL DESIGN DETAILS ARE BASED ON CORE HOLE AND WELL LOG RECORDS.

HALEY ALDRICH

FLORENCE COPPER, INC.
FLORENCE, ARIZONA

ABANDONMENT SCHEMATIC
OBSERVATION/PERIMETER
WELL P28-GL

SEPTEMBER 2019
SCALE: AS SHOWN

FIGURE 1

OMB No. 2040-0042 Approval Expires 4/30/2022

United States Environmental Protection Agency

WELL REWORK RECORD, PLUGGING AND ABANDONMENT PLAN, OR PLUGGING AND ABANDONMENT AFFIDAVIT

Name and Address, Phone Number and/or Email of Permittee

Florence Copper Project
1575 W Hunt Hwy,
Florence, AZ 85132

Permit or EPA ID Number	API Number	Full Well Name
R9UIC-AZ3-FY11-1		P39-O

State	County
Arizona	Pinal

Locate well in two directions from nearest lines of quarter section and drilling unit

Latitude 33.0446688

Surface Location

NE **1/4 of** NW **1/4 of Section** 33 **Township** 4S **Range** 9E

Longitude -111.4300826

_____ **ft. from (N/S)** _____ **Line of quarter section**

_____ **ft. from (E/W)** _____ **Line of quarter section.**

Well Class	Timing of Action (pick one)	Type of Action (pick one)
☐ Class I ☐ Class II ☑ Class III ☐ Class V	☑ Notice Prior to Work Date Expected to Commence March 2021 ☐ Report After Work Date Work Ended	☐ Well Rework ☑ Plugging and Abandonment ☐ Conversion to a Non-Injection Well

Provide a narrative description of the work planned to be performed, or that was performed. Use additional pages as necessary. See instructions.

A workover rig capable of performing the required abandonment operations at the required depths will be moved in and set up over the well. The well casing will be inspected to determine the depth to which the well remains open and if any obstructions are present in the casing; the presence and condition of any existing surface casing will also be documented. If necessary, the well casing will be cleaned out to the bottom of the deepest screen or perforation to enable placement of cement seals.

If surface casing is present, an attempt will be made to remove it. If removal of the surface casing is not feasible, it will be left in the hole and perforated as needed to allow an annular seal to be placed to a depth of at least 25 feet bgs. In areas of agricultural use, the surface casing will be cut at least 5 feet bgs and removed.

If the surface casing cannot be removed, it will be perforated from at least 20 feet below the bedrock-LBFU contact to at least 20 feet above the contact; from at least 20 feet below the base of the MFGU to at least 20 feet above the top of the MFGU; and from at least 25 feet bgs to 5 feet bgs.

A tremie pipe will be used to place Type V cement in the open well from the bottom of the well casing to the top of the well casing. Cement retainers, as described above, will be used to force cement grout into the annulus and behind perforated screen intervals, as necessary.

If the well casing has been obstructed, as much cement as possible will be placed from 100 feet below the LBFU-bedrock contact to the top of the casing.

The volume of Type V cement will be recorded and will not be less than the estimated volume of material required to fill each interval. All cement grout will consist of Type V cement, or equivalent approved in accordance with the UIC Permit.

Certification

I certify under the penalty of law that I have personally examined and am familiar with the information submitted in this document and all attachments and that, based on my inquiry of those individuals immediately responsible for obtaining the information, I believe that the information is true, accurate, and complete. I am aware that there are significant penalties for submitting false information, including the possibliity of fine and imprisonment. (Ref. 40 CFR § 144.32)

Name and Official Title *(Please type or print)*	Signature	Date Signed
Dan Johnson, VP - General Manager		10/3/2019

INSTRUCTIONS FOR FORM 7520-19

This form replaces forms 7520-12 and 7520-14. Use this form only when work is planned or has occurred that affects the well's construction or operation as an injection well, including work on the casing, tubing or packer (or for shallow Class V wells, the subsurface fluid emplacement network). Use one form per injection well. While reports or other information developed by contractors or service companies may be attached, this form must be signed by a responsible entity as described at 40 CFR 144.32. Note: operators closing Class V wells should use Form 7520-17.

NAME, ADDRESS, PHONE AND/OR EMAIL OF PERMITTEE: Enter the name and street address, city/town, state, and ZIP code of the permittee. Also provide an email address (if available) and/or a phone number.

PERMIT OR EPA ID NUMBER: Enter the well identification number or permit number assigned to the well by the EPA or the permitting authority.

API NUMBER: Enter the number assigned by the local jurisdiction (usually a State Oil and Gas Agency) using the American Petroleum Institute standard numbering system.

FULL WELL NAME: Enter the full name of the well or project.

Enter the **STATE** and **COUNTY** where the well is located. For States that do not have counties, use the name of that State's equivalent jurisdiction at a more local level.

WELL LOCATION: Fill in the complete township, range, and section to the nearest quarter-quarter section. A township is north or south of the baseline, and a range is east or west of the principal meridian (e.g., T12N, R34W). Also include the distance, in feet, from the nearest north or south line and nearest east or west line of the quarter-section. Also, enter the **latitude** and **longitude** of the well in decimal degrees, to five or six places if possible; be sure to include a negative sign for the longitude of a well in the Western Hemisphere and a negative sign for the latitude of a well in the Southern Hemisphere.

Enter the **WELL CLASS,** i.e., the class of injection well as defined in 40 CFR 144.6.

TIMING OF THE ACTION: Check ***Notice prior to work*** if the activity has not yet occurred (i.e., is planned). Check ***Report after work*** if the activity described has already occurred. As appropriate, include the date the activity is expected to start or the date the activity was completed. (Note this may not be available, e.g., for a plugging plan submitted with a permit application.)

TYPE OF ACTION: Check the appropriate box to describe the kind of activity being reported. Check ***Well Rework*** for work that was/will be performed on the well after it has already been in operation as an injection well. Check ***Plugging and Abandonment*** to report on plans for or descriptions of final closure/plugging after use as an injection well. Check ***Conversion to a Non-Injection Well*** if the well is to be converted to something other than an injection well.

Provide a **NARRATIVE DESCRIPTION** of the work planned to be performed, or that was performed. The narrative should include a description of the main procedures planned or that occurred during the work activity. A service company report, daily report, or similar document may be attached if it includes all the requested information and is clear and legible.

For well reworks, include the following information: The reason for the well rework; depths of activity; type of activity; changes to injection well configuration, well casing, or cement behind casing; any plug added to the well and its depth; any newly drilled interval and its depth; method(s) to demonstrate that the well has mechanical integrity (as applicable); and any deviations from the approved rework plan (as applicable).

For a well plugging plan, include the following information: Reason for the well plugging; number of plugs placed, and their depths; materials used as plugs (e.g., cast iron bridge plug, cement, cement retainer); method to set plugs; and wait-on-cement times, if any. Also provide one or more cost estimates from an independent firm in the business of plugging and abandoning wells to plug the well as described in the plan.

For well plugging affidavit, include the following information: Reason for the well plugging; number of plugs placed, and their depths; materials used as plugs (e.g., cast iron bridge plug, cement, cement retainer); method to set plugs; wait-on-cement times, if any; and any deviations from the approved plugging plan (if applicable).

For conversion to a non-injection well, include the following information: Depths of activity; type of activity; changes to injection well configuration, well casing, or cement behind casing; any plug added to the well and its depth; any newly drilled interval and its depth; depths of new perforations; and method(s) to demonstrate that the well has mechanical integrity (as applicable).

For all of the above activities, include a well sketch depicting the work, results of well tests/logging performed, service company tickets, and any other available information demonstrating how the work was/is to be performed. Also, specify whether depths are below ground surface, relative to Kelly bushing, etc.

CERTIFICATION: This form must be signed and dated by either: a responsible corporate officer for a corporation, by a general partner for a partnership, by the proprietor of a sole proprietorship, or by a principal executive or ranking elected official for a public agency.

PAPERWORK REDUCTION ACT NOTICE: The public reporting and recordkeeping burden for this collection of information is estimated to average between 6.0 and 7.9 hours per response, depending on the injection well class. Burden means the total time, effort, or financial resource expended by persons to generate, maintain, retain, or disclose or provide information to or for a Federal Agency. This includes the time needed to review instructions; develop, acquire, install, and utilize technology and systems for the purposes of collecting, validating, and verifying information, processing and maintaining information, and disclosing and providing information; adjust the existing ways to comply with any previously applicable instructions and requirements; train personnel to be able to respond to the collection of information; search data sources; complete and review the collection of information; and, transmit or otherwise disclose the information. An agency may not conduct or sponsor, and a person is not required to respond to, a collection of information unless it displays a currently valid OMB control number. Send comments on the Agency's need for this information, the accuracy of the provided burden estimates, and any suggested methods for minimizing respondent burden, including the use of automated collection techniques to Director, Collection Strategies Division, U.S. Environmental Protection Agency (2822), 1200 Pennsylvania Ave., NW., Washington, D.C. 20460. Include the OMB control number in any correspondence. Do not send the completed forms to this address.

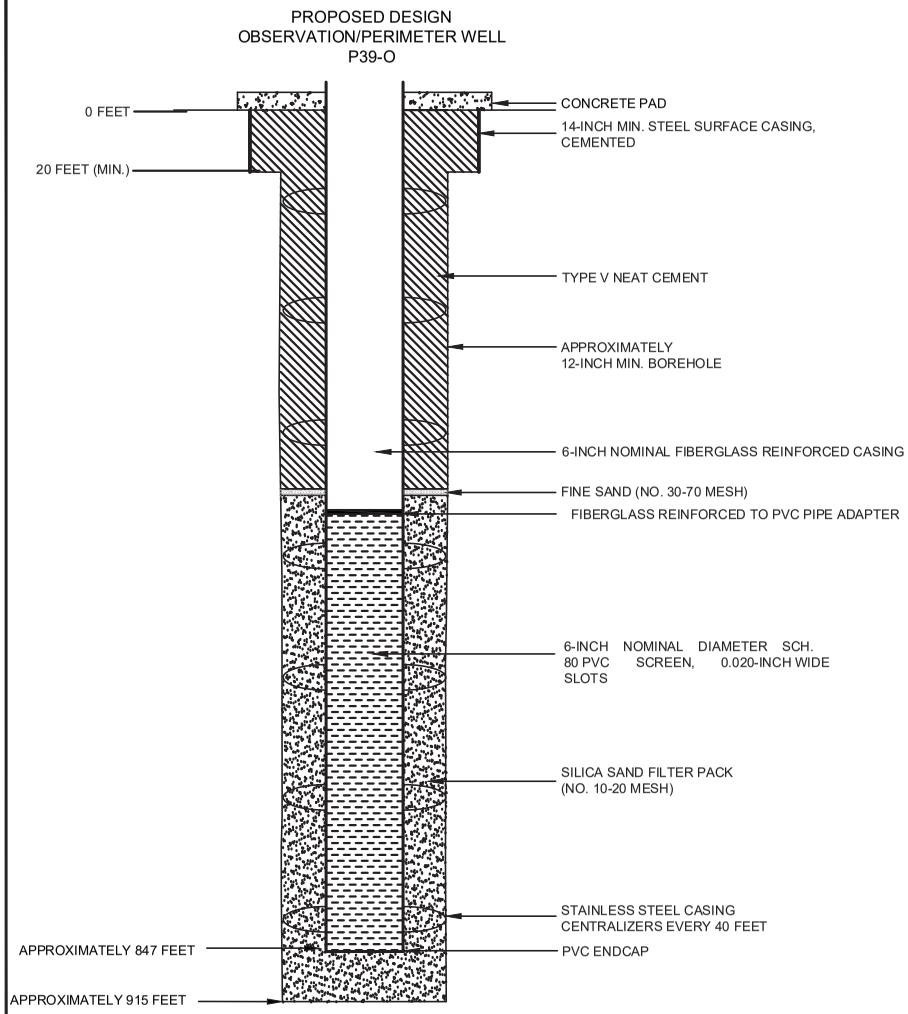

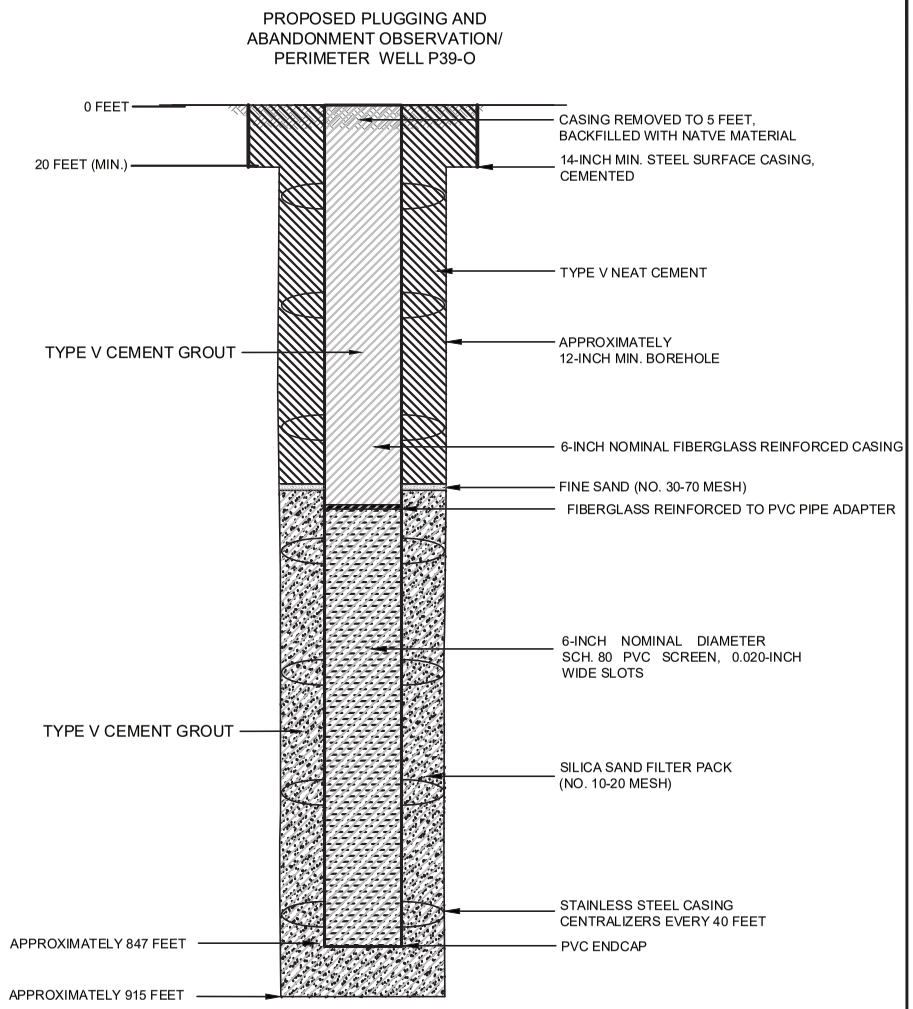

NOTES

1. WELL DESIGN DETAILS ARE BASED ON CORE HOLE AND WELL LOG RECORDS.

HALEY ALDRICH

FLORENCE COPPER, INC.
FLORENCE, ARIZONA

ABANDONMENT SCHEMATIC
OBSERVATION/PERIMETER
WELL P39-O

SEPTEMBER 2019
SCALE: AS SHOWN

FIGURE 1

OMB No. 2040-0042 Approval Expires 4/30/2022

United States Environmental Protection Agency

WELL REWORK RECORD, PLUGGING AND ABANDONMENT PLAN, OR PLUGGING AND ABANDONMENT AFFIDAVIT

Name and Address, Phone Number and/or Email of Permittee

Florence Copper Project
1575 W Hunt Hwy,
Florence, AZ 85132

Permit or EPA ID Number	API Number	Full Well Name
R9UIC-AZ3-FY11-1		P49-O

State	County
Arizona	Pinal

Locate well in two directions from nearest lines of quarter section and drilling unit

Latitude 33.04496309

Longitude -111.434946

Surface Location

NW **1/4 of** NW **1/4 of Section** 33 **Township** 4S **Range** 9E

_____ **ft. from (N/S)** _____ **Line of quarter section**

_____ **ft. from (E/W)** _____ **Line of quarter section.**

Well Class	Timing of Action (pick one)	Type of Action (pick one)
☐ Class I ☐ Class II ☑ Class III ☐ Class V	☑ Notice Prior to Work Date Expected to Commence March 2021 ☐ Report After Work Date Work Ended	☐ Well Rework ☑ Plugging and Abandonment ☐ Conversion to a Non-Injection Well

Provide a narrative description of the work planned to be performed, or that was performed. Use additional pages as necessary. See instructions.

A workover rig capable of performing the required abandonment operations at the required depths will be moved in and set up over the well. The well casing will be inspected to determine the depth to which the well remains open and if any obstructions are present in the casing; the presence and condition of any existing surface casing will also be documented. If necessary, the well casing will be cleaned out to the bottom of the deepest screen or perforation to enable placement of cement seals.

If surface casing is present, an attempt will be made to remove it. If removal of the surface casing is not feasible, it will be left in the hole and perforated as needed to allow an annular seal to be placed to a depth of at least 25 feet bgs. In areas of agricultural use, the surface casing will be cut at least 5 feet bgs and removed.

If the surface casing cannot be removed, it will be perforated from at least 20 feet below the bedrock-LBFU contact to at least 20 feet above the contact; from at least 20 feet below the base of the MFGU to at least 20 feet above the top of the MFGU; and from at least 25 feet bgs to 5 feet bgs.

A tremie pipe will be used to place Type V cement in the open well from the bottom of the well casing to the top of the well casing. Cement retainers, as described above, will be used to force cement grout into the annulus and behind perforated screen intervals, as necessary.

If the well casing has been obstructed, as much cement as possible will be placed from 100 feet below the LBFU-bedrock contact to the top of the casing.

The volume of Type V cement will be recorded and will not be less than the estimated volume of material required to fill each interval. All cement grout will consist of Type V cement, or equivalent approved in accordance with the UIC Permit.

Certification

I certify under the penalty of law that I have personally examined and am familiar with the information submitted in this document and all attachments and that, based on my inquiry of those individuals immediately responsible for obtaining the information, I believe that the information is true, accurate, and complete. I am aware that there are significant penalties for submitting false information, including the possibliity of fine and imprisonment. (Ref. 40 CFR § 144.32)

Name and Official Title *(Please type or print)*	Signature	Date Signed
Dan Johnson, VP - General Manager		10/3/2019

INSTRUCTIONS FOR FORM 7520-19

This form replaces forms 7520-12 and 7520-14. Use this form only when work is planned or has occurred that affects the well's construction or operation as an injection well, including work on the casing, tubing or packer (or for shallow Class V wells, the subsurface fluid emplacement network). Use one form per injection well. While reports or other information developed by contractors or service companies may be attached, this form must be signed by a responsible entity as described at 40 CFR 144.32. Note: operators closing Class V wells should use Form 7520-17.

NAME, ADDRESS, PHONE AND/OR EMAIL OF PERMITTEE: Enter the name and street address, city/town, state, and ZIP code of the permittee. Also provide an email address (if available) and/or a phone number.

PERMIT OR EPA ID NUMBER: Enter the well identification number or permit number assigned to the well by the EPA or the permitting authority.

API NUMBER: Enter the number assigned by the local jurisdiction (usually a State Oil and Gas Agency) using the American Petroleum Institute standard numbering system.

FULL WELL NAME: Enter the full name of the well or project.

Enter the **STATE** and **COUNTY** where the well is located. For States that do not have counties, use the name of that State's equivalent jurisdiction at a more local level.

WELL LOCATION: Fill in the complete township, range, and section to the nearest quarter-quarter section. A township is north or south of the baseline, and a range is east or west of the principal meridian (e.g., T12N, R34W). Also include the distance, in feet, from the nearest north or south line and nearest east or west line of the quarter-section. Also, enter the **latitude** and **longitude** of the well in decimal degrees, to five or six places if possible; be sure to include a negative sign for the longitude of a well in the Western Hemisphere and a negative sign for the latitude of a well in the Southern Hemisphere.

Enter the **WELL CLASS,** i.e., the class of injection well as defined in 40 CFR 144.6.

TIMING OF THE ACTION: Check ***Notice prior to work*** if the activity has not yet occurred (i.e., is planned). Check ***Report after work*** if the activity described has already occurred. As appropriate, include the date the activity is expected to start or the date the activity was completed. (Note this may not be available, e.g., for a plugging plan submitted with a permit application.)

TYPE OF ACTION: Check the appropriate box to describe the kind of activity being reported. Check ***Well Rework*** for work that was/will be performed on the well after it has already been in operation as an injection well. Check ***Plugging and Abandonment*** to report on plans for or descriptions of final closure/plugging after use as an injection well. Check ***Conversion to a Non-Injection Well*** if the well is to be converted to something other than an injection well.

Provide a **NARRATIVE DESCRIPTION** of the work planned to be performed, or that was performed. The narrative should include a description of the main procedures planned or that occurred during the work activity. A service company report, daily report, or similar document may be attached if it includes all the requested information and is clear and legible.

For well reworks, include the following information: The reason for the well rework; depths of activity; type of activity; changes to injection well configuration, well casing, or cement behind casing; any plug added to the well and its depth; any newly drilled interval and its depth; method(s) to demonstrate that the well has mechanical integrity (as applicable); and any deviations from the approved rework plan (as applicable).

For a well plugging plan, include the following information: Reason for the well plugging; number of plugs placed, and their depths; materials used as plugs (e.g., cast iron bridge plug, cement, cement retainer); method to set plugs; and wait-on-cement times, if any. Also provide one or more cost estimates from an independent firm in the business of plugging and abandoning wells to plug the well as described in the plan.

For well plugging affidavit, include the following information: Reason for the well plugging; number of plugs placed, and their depths; materials used as plugs (e.g., cast iron bridge plug, cement, cement retainer); method to set plugs; wait-on-cement times, if any; and any deviations from the approved plugging plan (if applicable).

For conversion to a non-injection well, include the following information: Depths of activity; type of activity; changes to injection well configuration, well casing, or cement behind casing; any plug added to the well and its depth; any newly drilled interval and its depth; depths of new perforations; and method(s) to demonstrate that the well has mechanical integrity (as applicable).

For all of the above activities, include a well sketch depicting the work, results of well tests/logging performed, service company tickets, and any other available information demonstrating how the work was/is to be performed. Also, specify whether depths are below ground surface, relative to Kelly bushing, etc.

CERTIFICATION: This form must be signed and dated by either: a responsible corporate officer for a corporation, by a general partner for a partnership, by the proprietor of a sole proprietorship, or by a principal executive or ranking elected official for a public agency.

PAPERWORK REDUCTION ACT NOTICE: The public reporting and recordkeeping burden for this collection of information is estimated to average between 6.0 and 7.9 hours per response, depending on the injection well class. Burden means the total time, effort, or financial resource expended by persons to generate, maintain, retain, or disclose or provide information to or for a Federal Agency. This includes the time needed to review instructions; develop, acquire, install, and utilize technology and systems for the purposes of collecting, validating, and verifying information, processing and maintaining information, and disclosing and providing information; adjust the existing ways to comply with any previously applicable instructions and requirements; train personnel to be able to respond to the collection of information; search data sources; complete and review the collection of information; and, transmit or otherwise disclose the information. An agency may not conduct or sponsor, and a person is not required to respond to, a collection of information unless it displays a currently valid OMB control number. Send comments on the Agency's need for this information, the accuracy of the provided burden estimates, and any suggested methods for minimizing respondent burden, including the use of automated collection techniques to Director, Collection Strategies Division, U.S. Environmental Protection Agency (2822), 1200 Pennsylvania Ave., NW., Washington, D.C. 20460. Include the OMB control number in any correspondence. Do not send the completed forms to this address.

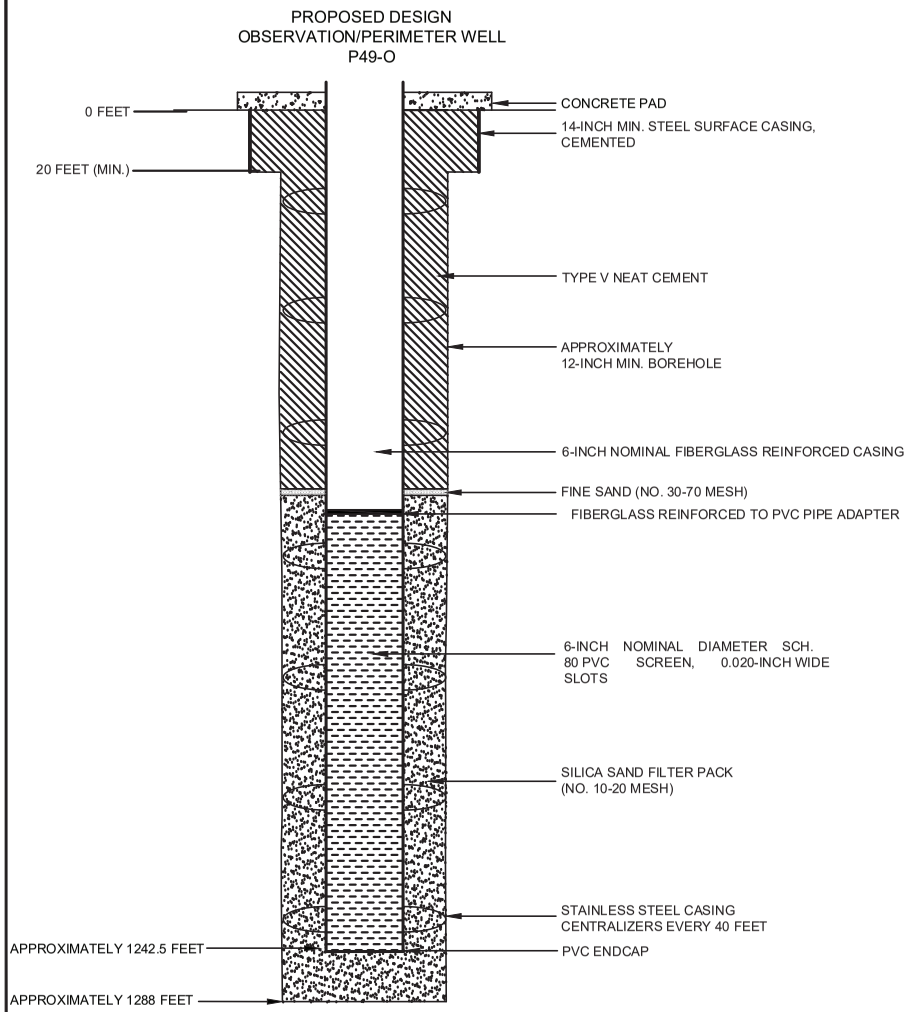

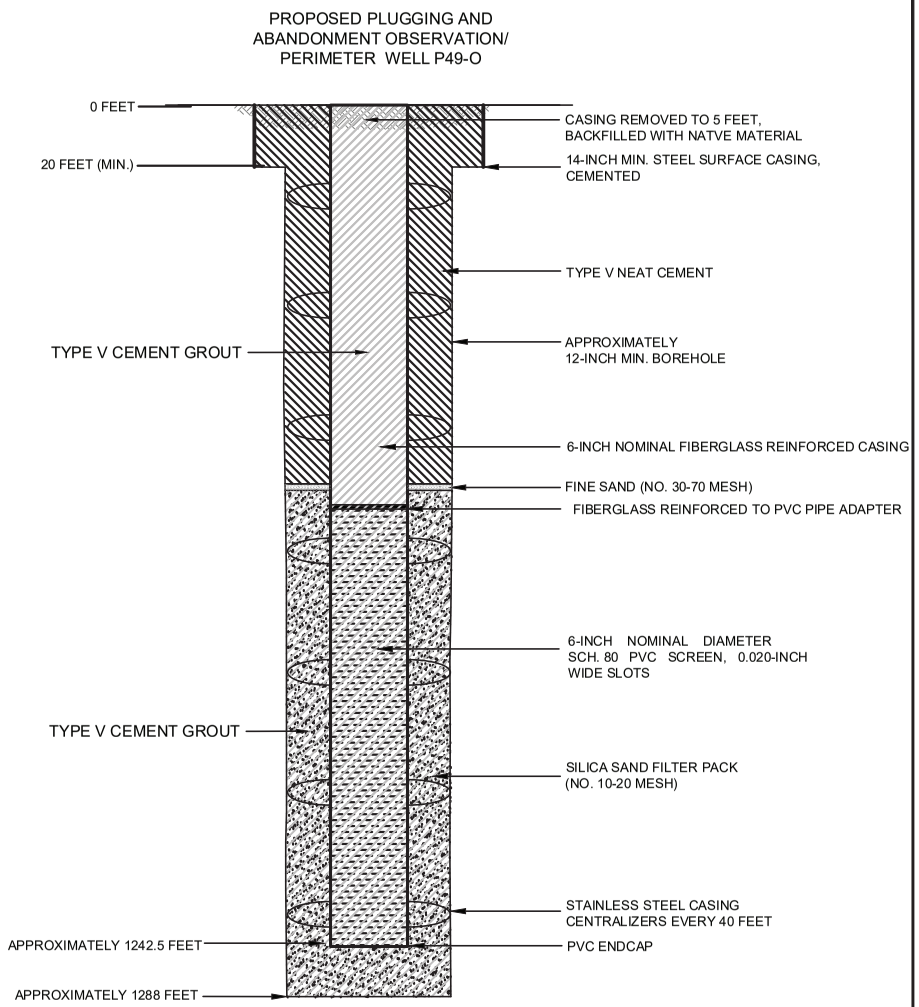

NOTES

1. WELL DESIGN DETAILS ARE BASED ON CORE HOLE AND WELL LOG RECORDS.

HALEY ALDRICH

FLORENCE COPPER, INC.
FLORENCE, ARIZONA

ABANDONMENT SCHEMATIC
OBSERVATION/PERIMETER
WELL P49-O

SEPTEMBER 2019
SCALE: AS SHOWN

FIGURE 1

OMB No. 2040-0042 Approval Expires 4/30/2022

United States Environmental Protection Agency

WELL REWORK RECORD, PLUGGING AND ABANDONMENT PLAN, OR PLUGGING AND ABANDONMENT AFFIDAVIT

Name and Address, Phone Number and/or Email of Permittee

Florence Copper Project
1575 W Hunt Hwy,
Florence, AZ 85132

Permit or EPA ID Number	API Number	Full Well Name
R9UIC-AZ3-FY11-1		PW-1

State	County
Arizona	Pinal

Locate well in two directions from nearest lines of quarter section and drilling unit

Latitude 33.04995429

Longitude -111.4268967

Surface Location

NW **1/4 of** SE **1/4 of Section** 28 **Township** 4S **Range** 9E

_____ **ft. from (N/S)** _____ **Line of quarter section**

_____ **ft. from (E/W)** _____ **Line of quarter section.**

Well Class	Timing of Action (pick one)	Type of Action (pick one)
☐ Class I ☐ Class II ☑ Class III ☐ Class V	☑ Notice Prior to Work Date Expected to Commence March 2021 ☐ Report After Work Date Work Ended	☐ Well Rework ☑ Plugging and Abandonment ☐ Conversion to a Non-Injection Well

Provide a narrative description of the work planned to be performed, or that was performed. Use additional pages as necessary. See instructions.

A workover rig capable of performing the required abandonment operations at the required depths will be moved in and set up over the well. The well casing will be inspected to determine the depth to which the well remains open and if any obstructions are present in the casing; the presence and condition of any existing surface casing will also be documented. If necessary, the well casing will be cleaned out to the bottom of the deepest screen or perforation to enable placement of cement seals.

If surface casing is present, an attempt will be made to remove it. If removal of the surface casing is not feasible, it will be left in the hole and perforated as needed to allow an annular seal to be placed to a depth of at least 25 feet bgs. In areas of agricultural use, the surface casing will be cut at least 5 feet bgs and removed.

If the surface casing cannot be removed, it will be perforated from at least 20 feet below the bedrock-LBFU contact to at least 20 feet above the contact; from at least 20 feet below the base of the MFGU to at least 20 feet above the top of the MFGU; and from at least 25 feet bgs to 5 feet bgs.

A tremie pipe will be used to place Type V cement in the open well from the bottom of the well casing to the top of the well casing. Cement retainers, as described above, will be used to force cement grout into the annulus and behind perforated screen intervals, as necessary.

If the well casing has been obstructed, as much cement as possible will be placed from 100 feet below the LBFU-bedrock contact to the top of the casing.

The volume of Type V cement will be recorded and will not be less than the estimated volume of material required to fill each interval. All cement grout will consist of Type V cement, or equivalent approved in accordance with the UIC Permit.

Certification

I certify under the penalty of law that I have personally examined and am familiar with the information submitted in this document and all attachments and that, based on my inquiry of those individuals immediately responsible for obtaining the information, I believe that the information is true, accurate, and complete. I am aware that there are significant penalties for submitting false information, including the possibliity of fine and imprisonment. (Ref. 40 CFR § 144.32)

Name and Official Title *(Please type or print)*	Signature	Date Signed
Dan Johnson, VP - General Manager		10/3/2019

INSTRUCTIONS FOR FORM 7520-19

This form replaces forms 7520-12 and 7520-14. Use this form only when work is planned or has occurred that affects the well's construction or operation as an injection well, including work on the casing, tubing or packer (or for shallow Class V wells, the subsurface fluid emplacement network). Use one form per injection well. While reports or other information developed by contractors or service companies may be attached, this form must be signed by a responsible entity as described at 40 CFR 144.32. Note: operators closing Class V wells should use Form 7520-17.

NAME, ADDRESS, PHONE AND/OR EMAIL OF PERMITTEE: Enter the name and street address, city/town, state, and ZIP code of the permittee. Also provide an email address (if available) and/or a phone number.

PERMIT OR EPA ID NUMBER: Enter the well identification number or permit number assigned to the well by the EPA or the permitting authority.

API NUMBER: Enter the number assigned by the local jurisdiction (usually a State Oil and Gas Agency) using the American Petroleum Institute standard numbering system.

FULL WELL NAME: Enter the full name of the well or project.

Enter the **STATE** and **COUNTY** where the well is located. For States that do not have counties, use the name of that State's equivalent jurisdiction at a more local level.

WELL LOCATION: Fill in the complete township, range, and section to the nearest quarter-quarter section. A township is north or south of the baseline, and a range is east or west of the principal meridian (e.g., T12N, R34W). Also include the distance, in feet, from the nearest north or south line and nearest east or west line of the quarter-section. Also, enter the **latitude** and **longitude** of the well in decimal degrees, to five or six places if possible; be sure to include a negative sign for the longitude of a well in the Western Hemisphere and a negative sign for the latitude of a well in the Southern Hemisphere.

Enter the **WELL CLASS,** i.e., the class of injection well as defined in 40 CFR 144.6.

TIMING OF THE ACTION: Check ***Notice prior to work*** if the activity has not yet occurred (i.e., is planned). Check ***Report after work*** if the activity described has already occurred. As appropriate, include the date the activity is expected to start or the date the activity was completed. (Note this may not be available, e.g., for a plugging plan submitted with a permit application.)

TYPE OF ACTION: Check the appropriate box to describe the kind of activity being reported. Check ***Well Rework*** for work that was/will be performed on the well after it has already been in operation as an injection well. Check ***Plugging and Abandonment*** to report on plans for or descriptions of final closure/plugging after use as an injection well. Check ***Conversion to a Non-Injection Well*** if the well is to be converted to something other than an injection well.

Provide a **NARRATIVE DESCRIPTION** of the work planned to be performed, or that was performed. The narrative should include a description of the main procedures planned or that occurred during the work activity. A service company report, daily report, or similar document may be attached if it includes all the requested information and is clear and legible.

For well reworks, include the following information: The reason for the well rework; depths of activity; type of activity; changes to injection well configuration, well casing, or cement behind casing; any plug added to the well and its depth; any newly drilled interval and its depth; method(s) to demonstrate that the well has mechanical integrity (as applicable); and any deviations from the approved rework plan (as applicable).

For a well plugging plan, include the following information: Reason for the well plugging; number of plugs placed, and their depths; materials used as plugs (e.g., cast iron bridge plug, cement, cement retainer); method to set plugs; and wait-on-cement times, if any. Also provide one or more cost estimates from an independent firm in the business of plugging and abandoning wells to plug the well as described in the plan.

For well plugging affidavit, include the following information: Reason for the well plugging; number of plugs placed, and their depths; materials used as plugs (e.g., cast iron bridge plug, cement, cement retainer); method to set plugs; wait-on-cement times, if any; and any deviations from the approved plugging plan (if applicable).

For conversion to a non-injection well, include the following information: Depths of activity; type of activity; changes to injection well configuration, well casing, or cement behind casing; any plug added to the well and its depth; any newly drilled interval and its depth; depths of new perforations; and method(s) to demonstrate that the well has mechanical integrity (as applicable).

For all of the above activities, include a well sketch depicting the work, results of well tests/logging performed, service company tickets, and any other available information demonstrating how the work was/is to be performed. Also, specify whether depths are below ground surface, relative to Kelly bushing, etc.

CERTIFICATION: This form must be signed and dated by either: a responsible corporate officer for a corporation, by a general partner for a partnership, by the proprietor of a sole proprietorship, or by a principal executive or ranking elected official for a public agency.

PAPERWORK REDUCTION ACT NOTICE: The public reporting and recordkeeping burden for this collection of information is estimated to average between 6.0 and 7.9 hours per response, depending on the injection well class. Burden means the total time, effort, or financial resource expended by persons to generate, maintain, retain, or disclose or provide information to or for a Federal Agency. This includes the time needed to review instructions; develop, acquire, install, and utilize technology and systems for the purposes of collecting, validating, and verifying information, processing and maintaining information, and disclosing and providing information; adjust the existing ways to comply with any previously applicable instructions and requirements; train personnel to be able to respond to the collection of information; search data sources; complete and review the collection of information; and, transmit or otherwise disclose the information. An agency may not conduct or sponsor, and a person is not required to respond to, a collection of information unless it displays a currently valid OMB control number. Send comments on the Agency's need for this information, the accuracy of the provided burden estimates, and any suggested methods for minimizing respondent burden, including the use of automated collection techniques to Director, Collection Strategies Division, U.S. Environmental Protection Agency (2822), 1200 Pennsylvania Ave., NW., Washington, D.C. 20460. Include the OMB control number in any correspondence. Do not send the completed forms to this address.

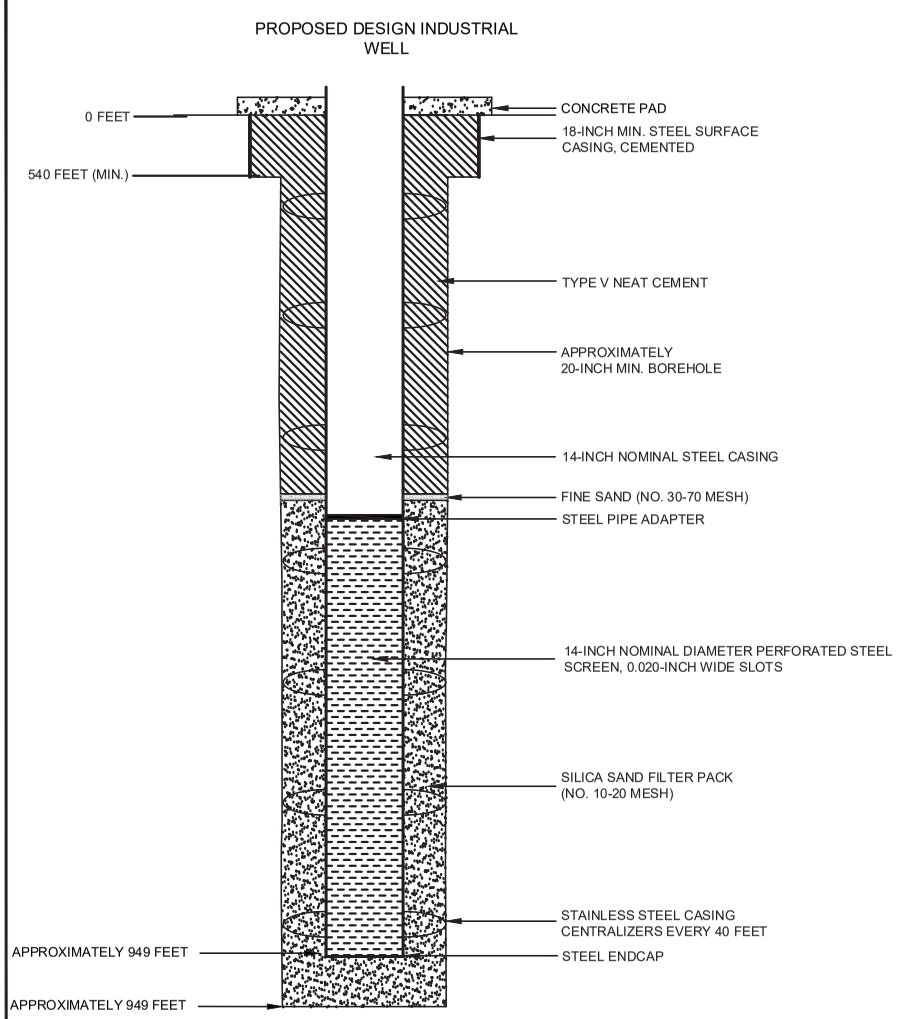

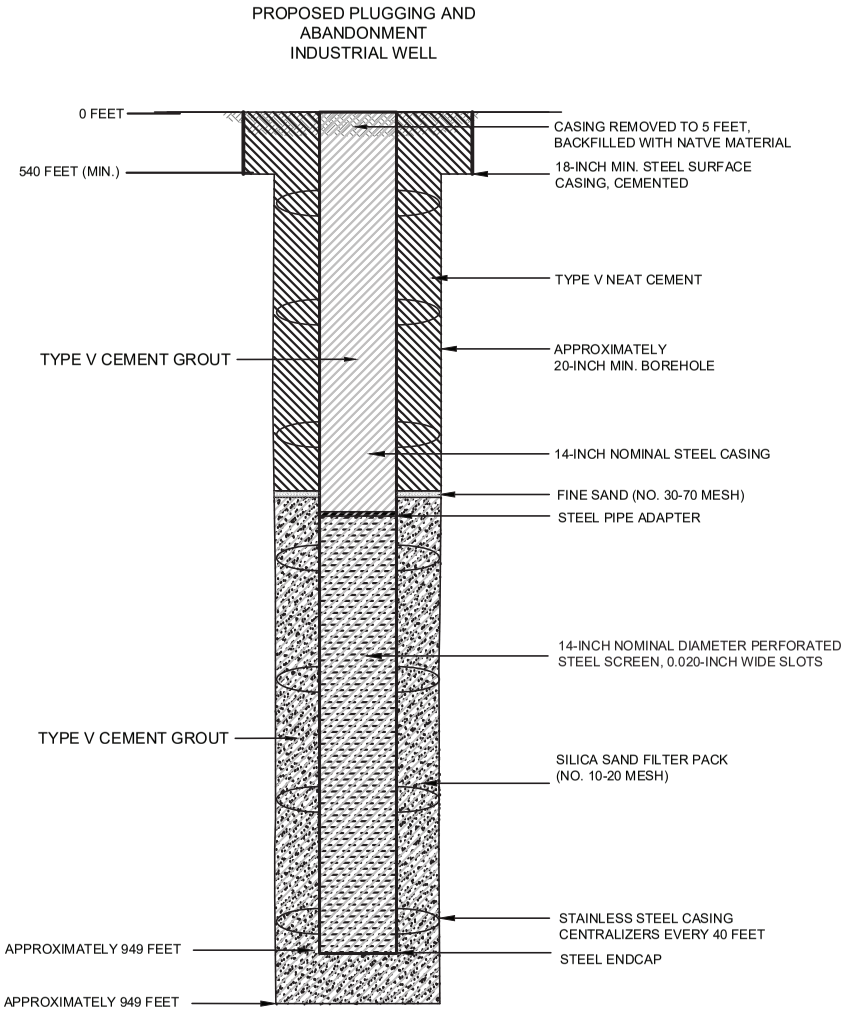

NOTES

1. WELL DESIGN DETAILS ARE BASED ON CORE HOLE AND WELL LOG RECORDS.

HALEY ALDRICH

FLORENCE COPPER, INC.
FLORENCE, ARIZONA

ABANDONMENT SCHEMATIC
INDUSTRIAL WELL PW-1 (Conoco 1, WW-1)

SEPTEMBER 2019
SCALE: AS SHOWN

FIGURE 1

OMB No. 2040-0042 Approval Expires 4/30/2022

United States Environmental Protection Agency

WELL REWORK RECORD, PLUGGING AND ABANDONMENT PLAN, OR PLUGGING AND ABANDONMENT AFFIDAVIT

Name and Address, Phone Number and/or Email of Permittee

Florence Copper Project
1575 W Hunt Hwy,
Florence, AZ 85132

Permit or EPA ID Number	API Number	Full Well Name
R9UIC-AZ3-FY11-1		PW1-1

State	County
Arizona	Pinal

Locate well in two directions from nearest lines of quarter section and drilling unit

Latitude 33.05119846

Longitude -111.4312232

Surface Location

NE **1/4 of** SW **1/4 of Section** 28 **Township** 4S **Range** 9E

_____ **ft. from (N/S)** _____ **Line of quarter section**

_____ **ft. from (E/W)** _____ **Line of quarter section.**

Well Class	Timing of Action (pick one)	Type of Action (pick one)
☐ Class I ☐ Class II ☑ Class III ☐ Class V	☑ Notice Prior to Work Date Expected to Commence March 2021 ☐ Report After Work Date Work Ended	☐ Well Rework ☑ Plugging and Abandonment ☐ Conversion to a Non-Injection Well

Provide a narrative description of the work planned to be performed, or that was performed. Use additional pages as necessary. See instructions.

A workover rig capable of performing the required abandonment operations at the required depths will be moved in and set up over the well. The well casing will be inspected to determine the depth to which the well remains open and if any obstructions are present in the casing; the presence and condition of any existing surface casing will also be documented. If necessary, the well casing will be cleaned out to the bottom of the deepest screen or perforation to enable placement of cement seals.

If surface casing is present, an attempt will be made to remove it. If removal of the surface casing is not feasible, it will be left in the hole and perforated as needed to allow an annular seal to be placed to a depth of at least 25 feet bgs. In areas of agricultural use, the surface casing will be cut at least 5 feet bgs and removed.

If the surface casing cannot be removed, it will be perforated from at least 20 feet below the bedrock-LBFU contact to at least 20 feet above the contact; from at least 20 feet below the base of the MFGU to at least 20 feet above the top of the MFGU; and from at least 25 feet bgs to 5 feet bgs.

A tremie pipe will be used to place Type V cement in the open well from the bottom of the well casing to the top of the well casing. Cement retainers, as described above, will be used to force cement grout into the annulus and behind perforated screen intervals, as necessary.

If the well casing has been obstructed, as much cement as possible will be placed from 100 feet below the LBFU-bedrock contact to the top of the casing.

The volume of Type V cement will be recorded and will not be less than the estimated volume of material required to fill each interval. All cement grout will consist of Type V cement, or equivalent approved in accordance with the UIC Permit.

Certification

I certify under the penalty of law that I have personally examined and am familiar with the information submitted in this document and all attachments and that, based on my inquiry of those individuals immediately responsible for obtaining the information, I believe that the information is true, accurate, and complete. I am aware that there are significant penalties for submitting false information, including the possibliity of fine and imprisonment. (Ref. 40 CFR § 144.32)

Name and Official Title *(Please type or print)*	Signature	Date Signed
Dan Johnson, VP - General Manager		10/3/2019

INSTRUCTIONS FOR FORM 7520-19

This form replaces forms 7520-12 and 7520-14. Use this form only when work is planned or has occurred that affects the well's construction or operation as an injection well, including work on the casing, tubing or packer (or for shallow Class V wells, the subsurface fluid emplacement network). Use one form per injection well. While reports or other information developed by contractors or service companies may be attached, this form must be signed by a responsible entity as described at 40 CFR 144.32. Note: operators closing Class V wells should use Form 7520-17.

NAME, ADDRESS, PHONE AND/OR EMAIL OF PERMITTEE: Enter the name and street address, city/town, state, and ZIP code of the permittee. Also provide an email address (if available) and/or a phone number.

PERMIT OR EPA ID NUMBER: Enter the well identification number or permit number assigned to the well by the EPA or the permitting authority.

API NUMBER: Enter the number assigned by the local jurisdiction (usually a State Oil and Gas Agency) using the American Petroleum Institute standard numbering system.

FULL WELL NAME: Enter the full name of the well or project.

Enter the **STATE** and **COUNTY** where the well is located. For States that do not have counties, use the name of that State's equivalent jurisdiction at a more local level.

WELL LOCATION: Fill in the complete township, range, and section to the nearest quarter-quarter section. A township is north or south of the baseline, and a range is east or west of the principal meridian (e.g., T12N, R34W). Also include the distance, in feet, from the nearest north or south line and nearest east or west line of the quarter-section. Also, enter the **latitude** and **longitude** of the well in decimal degrees, to five or six places if possible; be sure to include a negative sign for the longitude of a well in the Western Hemisphere and a negative sign for the latitude of a well in the Southern Hemisphere.

Enter the **WELL CLASS,** i.e., the class of injection well as defined in 40 CFR 144.6.

TIMING OF THE ACTION: Check ***Notice prior to work*** if the activity has not yet occurred (i.e., is planned). Check ***Report after work*** if the activity described has already occurred. As appropriate, include the date the activity is expected to start or the date the activity was completed. (Note this may not be available, e.g., for a plugging plan submitted with a permit application.)

TYPE OF ACTION: Check the appropriate box to describe the kind of activity being reported. Check ***Well Rework*** for work that was/will be performed on the well after it has already been in operation as an injection well. Check ***Plugging and Abandonment*** to report on plans for or descriptions of final closure/plugging after use as an injection well. Check ***Conversion to a Non-Injection Well*** if the well is to be converted to something other than an injection well.

Provide a **NARRATIVE DESCRIPTION** of the work planned to be performed, or that was performed. The narrative should include a description of the main procedures planned or that occurred during the work activity. A service company report, daily report, or similar document may be attached if it includes all the requested information and is clear and legible.

For well reworks, include the following information: The reason for the well rework; depths of activity; type of activity; changes to injection well configuration, well casing, or cement behind casing; any plug added to the well and its depth; any newly drilled interval and its depth; method(s) to demonstrate that the well has mechanical integrity (as applicable); and any deviations from the approved rework plan (as applicable).

For a well plugging plan, include the following information: Reason for the well plugging; number of plugs placed, and their depths; materials used as plugs (e.g., cast iron bridge plug, cement, cement retainer); method to set plugs; and wait-on-cement times, if any. Also provide one or more cost estimates from an independent firm in the business of plugging and abandoning wells to plug the well as described in the plan.

For well plugging affidavit, include the following information: Reason for the well plugging; number of plugs placed, and their depths; materials used as plugs (e.g., cast iron bridge plug, cement, cement retainer); method to set plugs; wait-on-cement times, if any; and any deviations from the approved plugging plan (if applicable).

For conversion to a non-injection well, include the following information: Depths of activity; type of activity; changes to injection well configuration, well casing, or cement behind casing; any plug added to the well and its depth; any newly drilled interval and its depth; depths of new perforations; and method(s) to demonstrate that the well has mechanical integrity (as applicable).

For all of the above activities, include a well sketch depicting the work, results of well tests/logging performed, service company tickets, and any other available information demonstrating how the work was/is to be performed. Also, specify whether depths are below ground surface, relative to Kelly bushing, etc.

CERTIFICATION: This form must be signed and dated by either: a responsible corporate officer for a corporation, by a general partner for a partnership, by the proprietor of a sole proprietorship, or by a principal executive or ranking elected official for a public agency.

PAPERWORK REDUCTION ACT NOTICE: The public reporting and recordkeeping burden for this collection of information is estimated to average between 6.0 and 7.9 hours per response, depending on the injection well class. Burden means the total time, effort, or financial resource expended by persons to generate, maintain, retain, or disclose or provide information to or for a Federal Agency. This includes the time needed to review instructions; develop, acquire, install, and utilize technology and systems for the purposes of collecting, validating, and verifying information, processing and maintaining information, and disclosing and providing information; adjust the existing ways to comply with any previously applicable instructions and requirements; train personnel to be able to respond to the collection of information; search data sources; complete and review the collection of information; and, transmit or otherwise disclose the information. An agency may not conduct or sponsor, and a person is not required to respond to, a collection of information unless it displays a currently valid OMB control number. Send comments on the Agency's need for this information, the accuracy of the provided burden estimates, and any suggested methods for minimizing respondent burden, including the use of automated collection techniques to Director, Collection Strategies Division, U.S. Environmental Protection Agency (2822), 1200 Pennsylvania Ave., NW., Washington, D.C. 20460. Include the OMB control number in any correspondence. Do not send the completed forms to this address.

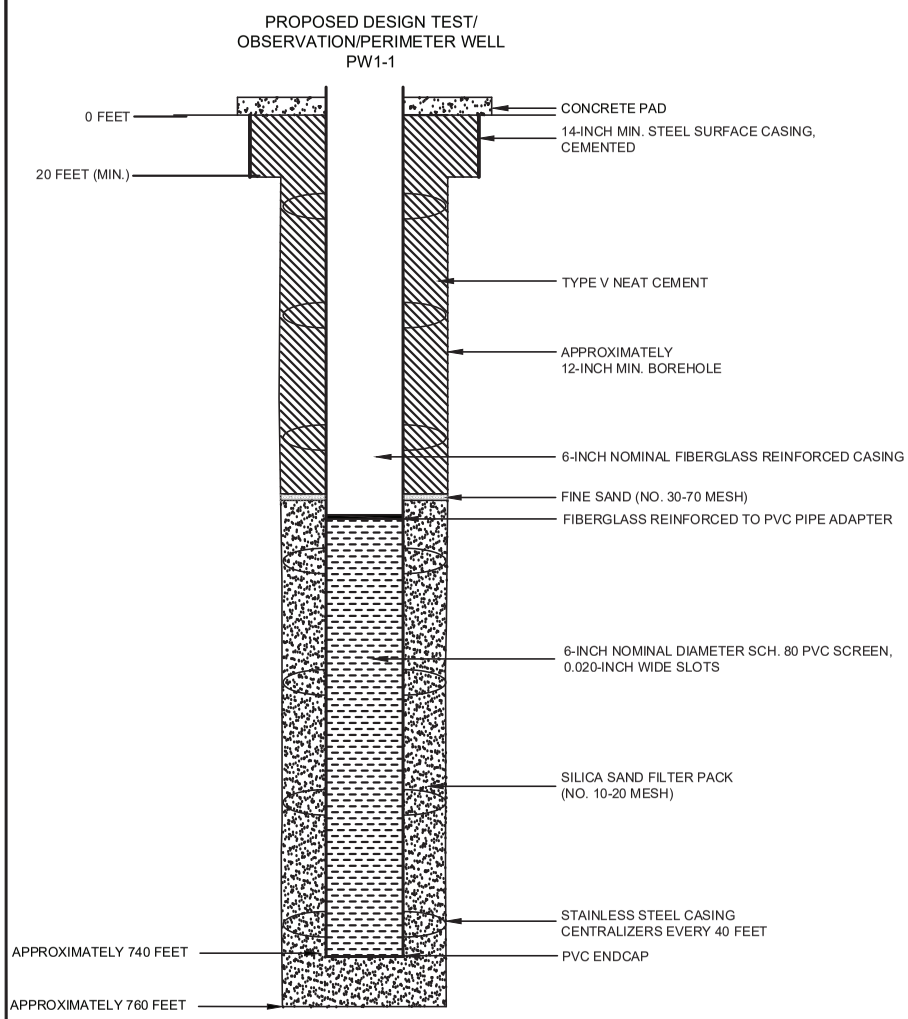

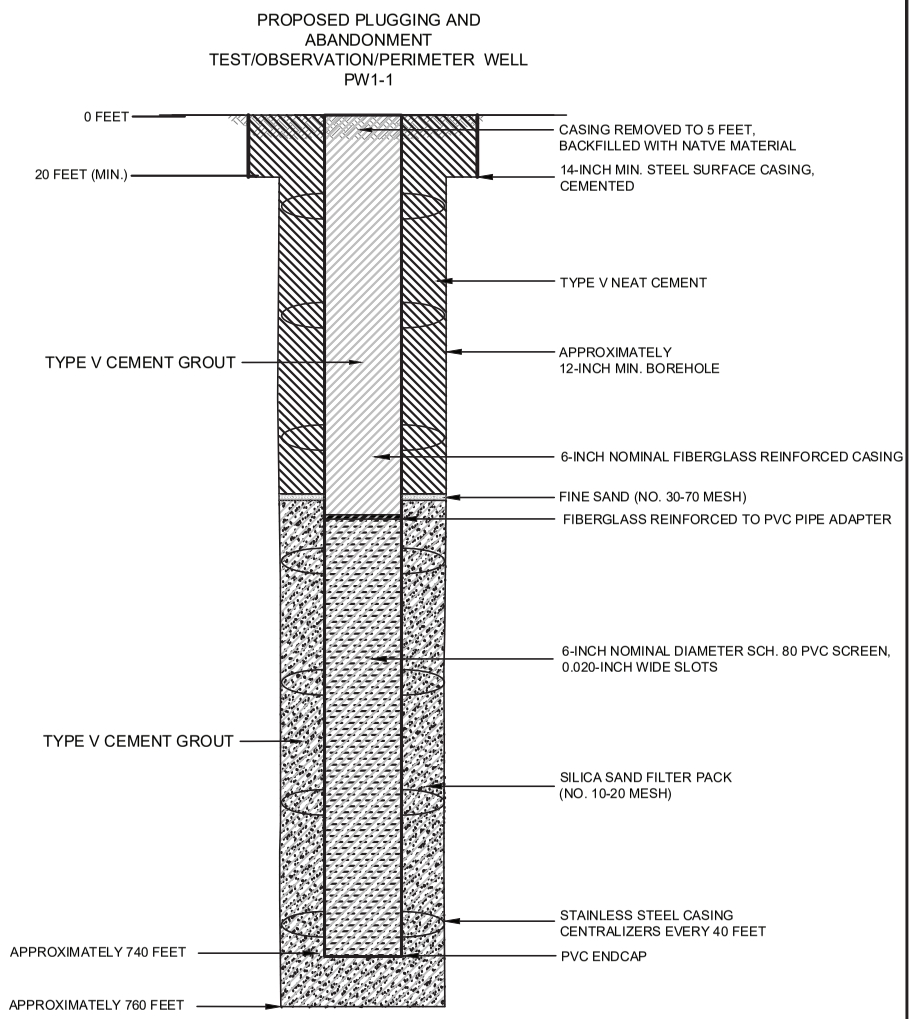

NOTES

1. WELL DESIGN DETAILS ARE BASED ON CORE HOLE AND WELL LOG RECORDS.

HALEY ALDRICH

FLORENCE COPPER, INC.
FLORENCE, ARIZONA

ABANDONMENT SCHEMATIC
TEST/OBSERVATION/PERIMETER
WELL PW1-1

SEPTEMBER 2019
SCALE: AS SHOWN

FIGURE 1

OMB No. 2040-0042 Approval Expires 4/30/2022

United States Environmental Protection Agency

WELL REWORK RECORD, PLUGGING AND ABANDONMENT PLAN, OR PLUGGING AND ABANDONMENT AFFIDAVIT

Name and Address, Phone Number and/or Email of Permittee

Florence Copper Project
1575 W Hunt Hwy,
Florence, AZ 85132

Permit or EPA ID Number	API Number	Full Well Name
R9UIC-AZ3-FY11-1		PW-2

State	County
Arizona	Pinal

Locate well in two directions from nearest lines of quarter section and drilling unit

Latitude 33.05283989

Surface Location

NE **1/4 of** SW **1/4 of Section** 28 **Township** 4S **Range** 9E

Longitude -111.4338323

_____ **ft. from (N/S)** _____ **Line of quarter section**

_____ **ft. from (E/W)** _____ **Line of quarter section.**

Well Class	Timing of Action (pick one)	Type of Action (pick one)
☐ Class I ☐ Class II ☑ Class III ☐ Class V	☑ Notice Prior to Work Date Expected to Commence March 2021 ☐ Report After Work Date Work Ended	☐ Well Rework ☑ Plugging and Abandonment ☐ Conversion to a Non-Injection Well

Provide a narrative description of the work planned to be performed, or that was performed. Use additional pages as necessary. See instructions.

A workover rig capable of performing the required abandonment operations at the required depths will be moved in and set up over the well. The well casing will be inspected to determine the depth to which the well remains open and if any obstructions are present in the casing; the presence and condition of any existing surface casing will also be documented. If necessary, the well casing will be cleaned out to the bottom of the deepest screen or perforation to enable placement of cement seals.

If surface casing is present, an attempt will be made to remove it. If removal of the surface casing is not feasible, it will be left in the hole and perforated as needed to allow an annular seal to be placed to a depth of at least 25 feet bgs. In areas of agricultural use, the surface casing will be cut at least 5 feet bgs and removed.

If the surface casing cannot be removed, it will be perforated from at least 20 feet below the bedrock-LBFU contact to at least 20 feet above the contact; from at least 20 feet below the base of the MFGU to at least 20 feet above the top of the MFGU; and from at least 25 feet bgs to 5 feet bgs.

A tremie pipe will be used to place Type V cement in the open well from the bottom of the well casing to the top of the well casing. Cement retainers, as described above, will be used to force cement grout into the annulus and behind perforated screen intervals, as necessary.

If the well casing has been obstructed, as much cement as possible will be placed from 100 feet below the LBFU-bedrock contact to the top of the casing.

The volume of Type V cement will be recorded and will not be less than the estimated volume of material required to fill each interval. All cement grout will consist of Type V cement, or equivalent approved in accordance with the UIC Permit.

Certification

I certify under the penalty of law that I have personally examined and am familiar with the information submitted in this document and all attachments and that, based on my inquiry of those individuals immediately responsible for obtaining the information, I believe that the information is true, accurate, and complete. I am aware that there are significant penalties for submitting false information, including the possibliity of fine and imprisonment. (Ref. 40 CFR § 144.32)

Name and Official Title *(Please type or print)*	Signature	Date Signed
Dan Johnson, VP - General Manager		10/3/2019

INSTRUCTIONS FOR FORM 7520-19

This form replaces forms 7520-12 and 7520-14. Use this form only when work is planned or has occurred that affects the well's construction or operation as an injection well, including work on the casing, tubing or packer (or for shallow Class V wells, the subsurface fluid emplacement network). Use one form per injection well. While reports or other information developed by contractors or service companies may be attached, this form must be signed by a responsible entity as described at 40 CFR 144.32. Note: operators closing Class V wells should use Form 7520-17.

NAME, ADDRESS, PHONE AND/OR EMAIL OF PERMITTEE: Enter the name and street address, city/town, state, and ZIP code of the permittee. Also provide an email address (if available) and/or a phone number.

PERMIT OR EPA ID NUMBER: Enter the well identification number or permit number assigned to the well by the EPA or the permitting authority.

API NUMBER: Enter the number assigned by the local jurisdiction (usually a State Oil and Gas Agency) using the American Petroleum Institute standard numbering system.

FULL WELL NAME: Enter the full name of the well or project.

Enter the **STATE** and **COUNTY** where the well is located. For States that do not have counties, use the name of that State's equivalent jurisdiction at a more local level.

WELL LOCATION: Fill in the complete township, range, and section to the nearest quarter-quarter section. A township is north or south of the baseline, and a range is east or west of the principal meridian (e.g., T12N, R34W). Also include the distance, in feet, from the nearest north or south line and nearest east or west line of the quarter-section. Also, enter the **latitude** and **longitude** of the well in decimal degrees, to five or six places if possible; be sure to include a negative sign for the longitude of a well in the Western Hemisphere and a negative sign for the latitude of a well in the Southern Hemisphere.

Enter the **WELL CLASS,** i.e., the class of injection well as defined in 40 CFR 144.6.

TIMING OF THE ACTION: Check ***Notice prior to work*** if the activity has not yet occurred (i.e., is planned). Check ***Report after work*** if the activity described has already occurred. As appropriate, include the date the activity is expected to start or the date the activity was completed. (Note this may not be available, e.g., for a plugging plan submitted with a permit application.)

TYPE OF ACTION: Check the appropriate box to describe the kind of activity being reported. Check ***Well Rework*** for work that was/will be performed on the well after it has already been in operation as an injection well. Check ***Plugging and Abandonment*** to report on plans for or descriptions of final closure/plugging after use as an injection well. Check ***Conversion to a Non-Injection Well*** if the well is to be converted to something other than an injection well.

Provide a **NARRATIVE DESCRIPTION** of the work planned to be performed, or that was performed. The narrative should include a description of the main procedures planned or that occurred during the work activity. A service company report, daily report, or similar document may be attached if it includes all the requested information and is clear and legible.

For well reworks, include the following information: The reason for the well rework; depths of activity; type of activity; changes to injection well configuration, well casing, or cement behind casing; any plug added to the well and its depth; any newly drilled interval and its depth; method(s) to demonstrate that the well has mechanical integrity (as applicable); and any deviations from the approved rework plan (as applicable).

For a well plugging plan, include the following information: Reason for the well plugging; number of plugs placed, and their depths; materials used as plugs (e.g., cast iron bridge plug, cement, cement retainer); method to set plugs; and wait-on-cement times, if any. Also provide one or more cost estimates from an independent firm in the business of plugging and abandoning wells to plug the well as described in the plan.

For well plugging affidavit, include the following information: Reason for the well plugging; number of plugs placed, and their depths; materials used as plugs (e.g., cast iron bridge plug, cement, cement retainer); method to set plugs; wait-on-cement times, if any; and any deviations from the approved plugging plan (if applicable).

For conversion to a non-injection well, include the following information: Depths of activity; type of activity; changes to injection well configuration, well casing, or cement behind casing; any plug added to the well and its depth; any newly drilled interval and its depth; depths of new perforations; and method(s) to demonstrate that the well has mechanical integrity (as applicable).

For all of the above activities, include a well sketch depicting the work, results of well tests/logging performed, service company tickets, and any other available information demonstrating how the work was/is to be performed. Also, specify whether depths are below ground surface, relative to Kelly bushing, etc.

CERTIFICATION: This form must be signed and dated by either: a responsible corporate officer for a corporation, by a general partner for a partnership, by the proprietor of a sole proprietorship, or by a principal executive or ranking elected official for a public agency.

PAPERWORK REDUCTION ACT NOTICE: The public reporting and recordkeeping burden for this collection of information is estimated to average between 6.0 and 7.9 hours per response, depending on the injection well class. Burden means the total time, effort, or financial resource expended by persons to generate, maintain, retain, or disclose or provide information to or for a Federal Agency. This includes the time needed to review instructions; develop, acquire, install, and utilize technology and systems for the purposes of collecting, validating, and verifying information, processing and maintaining information, and disclosing and providing information; adjust the existing ways to comply with any previously applicable instructions and requirements; train personnel to be able to respond to the collection of information; search data sources; complete and review the collection of information; and, transmit or otherwise disclose the information. An agency may not conduct or sponsor, and a person is not required to respond to, a collection of information unless it displays a currently valid OMB control number. Send comments on the Agency's need for this information, the accuracy of the provided burden estimates, and any suggested methods for minimizing respondent burden, including the use of automated collection techniques to Director, Collection Strategies Division, U.S. Environmental Protection Agency (2822), 1200 Pennsylvania Ave., NW., Washington, D.C. 20460. Include the OMB control number in any correspondence. Do not send the completed forms to this address.

Saved by: MNICHOLLS Printed: 7/25/2019 7:20 PM Sheet: HA-FIG-A-L(2)
\\HALEYALDRICH.COM\SHARE\PHX_COMMON\PROJECTS\FLORENCE COPPER\132473 FLORENCE GROUNDWATER PERMITTING\CAD\132473_000-OBSERVATION_WELL_CONSTRUCTION DIAGRAM.DWG

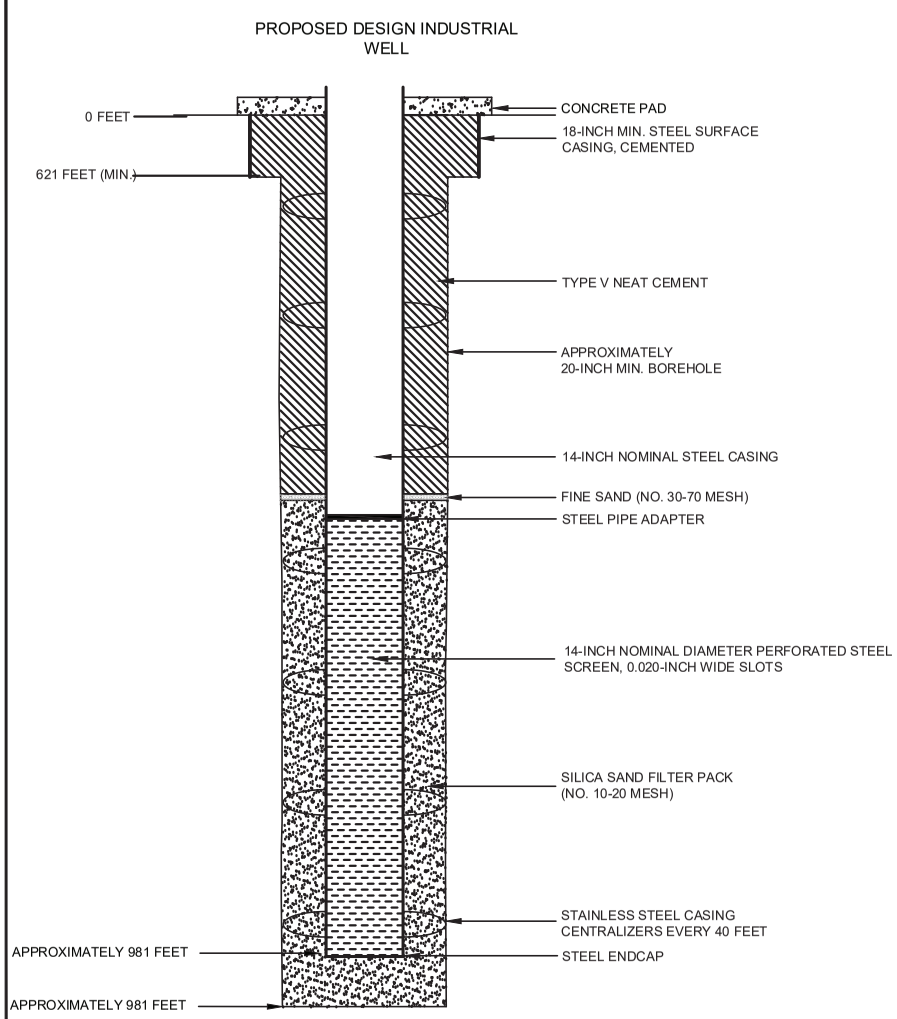

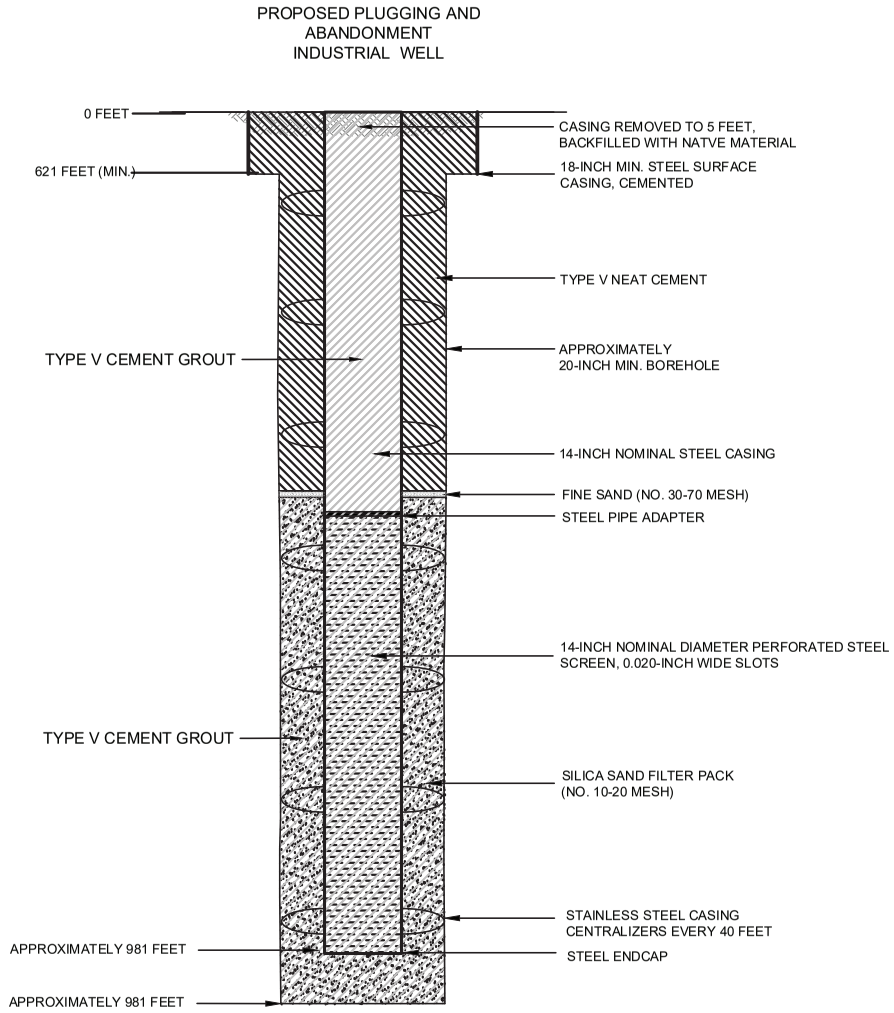

NOTES

1. WELL DESIGN DETAILS ARE BASED ON CORE HOLE AND WELL LOG RECORDS.

HALEY ALDRICH

FLORENCE COPPER, INC.
FLORENCE, ARIZONA

ABANDONMENT SCHEMATIC
INDUSTRIAL WELL PW-2 (Conoco 2)

SEPTEMBER 2019
SCALE: AS SHOWN

FIGURE 1

OMB No. 2040-0042 Approval Expires 4/30/2022

United States Environmental Protection Agency

EPA

WELL REWORK RECORD, PLUGGING AND ABANDONMENT PLAN, OR PLUGGING AND ABANDONMENT AFFIDAVIT

Name and Address, Phone Number and/or Email of Permittee

Florence Copper Project
1575 W Hunt Hwy,
Florence, AZ 85132

Permit or EPA ID Number	API Number	Full Well Name
R9UIC-AZ3-FY11-1		PW2-1

State	County
Arizona	Pinal

Locate well in two directions from nearest lines of quarter section and drilling unit

Latitude 33.0504259

Longitude -111.4286365

Surface Location

NW **1/4 of** SE **1/4 of Section** 28 **Township** 4S **Range** 9E

_____ **ft. from (N/S)** _____ **Line of quarter section**

_____ **ft. from (E/W)** _____ **Line of quarter section.**

Well Class	Timing of Action (pick one)	Type of Action (pick one)
☐ Class I ☐ Class II ☑ Class III ☐ Class V	☑ Notice Prior to Work Date Expected to Commence March 2021 ☐ Report After Work Date Work Ended	☐ Well Rework ☑ Plugging and Abandonment ☐ Conversion to a Non-Injection Well

Provide a narrative description of the work planned to be performed, or that was performed. Use additional pages as necessary. See instructions.

A workover rig capable of performing the required abandonment operations at the required depths will be moved in and set up over the well. The well casing will be inspected to determine the depth to which the well remains open and if any obstructions are present in the casing; the presence and condition of any existing surface casing will also be documented. If necessary, the well casing will be cleaned out to the bottom of the deepest screen or perforation to enable placement of cement seals.

If surface casing is present, an attempt will be made to remove it. If removal of the surface casing is not feasible, it will be left in the hole and perforated as needed to allow an annular seal to be placed to a depth of at least 25 feet bgs. In areas of agricultural use, the surface casing will be cut at least 5 feet bgs and removed.

If the surface casing cannot be removed, it will be perforated from at least 20 feet below the bedrock-LBFU contact to at least 20 feet above the contact; from at least 20 feet below the base of the MFGU to at least 20 feet above the top of the MFGU; and from at least 25 feet bgs to 5 feet bgs.

A tremie pipe will be used to place Type V cement in the open well from the bottom of the well casing to the top of the well casing. Cement retainers, as described above, will be used to force cement grout into the annulus and behind perforated screen intervals, as necessary.

If the well casing has been obstructed, as much cement as possible will be placed from 100 feet below the LBFU-bedrock contact to the top of the casing.

The volume of Type V cement will be recorded and will not be less than the estimated volume of material required to fill each interval. All cement grout will consist of Type V cement, or equivalent approved in accordance with the UIC Permit.

Certification

I certify under the penalty of law that I have personally examined and am familiar with the information submitted in this document and all attachments and that, based on my inquiry of those individuals immediately responsible for obtaining the information, I believe that the information is true, accurate, and complete. I am aware that there are significant penalties for submitting false information, including the possibliity of fine and imprisonment. (Ref. 40 CFR § 144.32)

Name and Official Title *(Please type or print)*	Signature	Date Signed
Dan Johnson, VP - General Manager		10/3/2019

INSTRUCTIONS FOR FORM 7520-19

This form replaces forms 7520-12 and 7520-14. Use this form only when work is planned or has occurred that affects the well's construction or operation as an injection well, including work on the casing, tubing or packer (or for shallow Class V wells, the subsurface fluid emplacement network). Use one form per injection well. While reports or other information developed by contractors or service companies may be attached, this form must be signed by a responsible entity as described at 40 CFR 144.32. Note: operators closing Class V wells should use Form 7520-17.

NAME, ADDRESS, PHONE AND/OR EMAIL OF PERMITTEE: Enter the name and street address, city/town, state, and ZIP code of the permittee. Also provide an email address (if available) and/or a phone number.

PERMIT OR EPA ID NUMBER: Enter the well identification number or permit number assigned to the well by the EPA or the permitting authority.

API NUMBER: Enter the number assigned by the local jurisdiction (usually a State Oil and Gas Agency) using the American Petroleum Institute standard numbering system.

FULL WELL NAME: Enter the full name of the well or project.

Enter the **STATE** and **COUNTY** where the well is located. For States that do not have counties, use the name of that State's equivalent jurisdiction at a more local level.

WELL LOCATION: Fill in the complete township, range, and section to the nearest quarter-quarter section. A township is north or south of the baseline, and a range is east or west of the principal meridian (e.g., T12N, R34W). Also include the distance, in feet, from the nearest north or south line and nearest east or west line of the quarter-section. Also, enter the **latitude** and **longitude** of the well in decimal degrees, to five or six places if possible; be sure to include a negative sign for the longitude of a well in the Western Hemisphere and a negative sign for the latitude of a well in the Southern Hemisphere.

Enter the **WELL CLASS,** i.e., the class of injection well as defined in 40 CFR 144.6.

TIMING OF THE ACTION: Check ***Notice prior to work*** if the activity has not yet occurred (i.e., is planned). Check ***Report after work*** if the activity described has already occurred. As appropriate, include the date the activity is expected to start or the date the activity was completed. (Note this may not be available, e.g., for a plugging plan submitted with a permit application.)

TYPE OF ACTION: Check the appropriate box to describe the kind of activity being reported. Check ***Well Rework*** for work that was/will be performed on the well after it has already been in operation as an injection well. Check ***Plugging and Abandonment*** to report on plans for or descriptions of final closure/plugging after use as an injection well. Check ***Conversion to a Non-Injection Well*** if the well is to be converted to something other than an injection well.

Provide a **NARRATIVE DESCRIPTION** of the work planned to be performed, or that was performed. The narrative should include a description of the main procedures planned or that occurred during the work activity. A service company report, daily report, or similar document may be attached if it includes all the requested information and is clear and legible.

For well reworks, include the following information: The reason for the well rework; depths of activity; type of activity; changes to injection well configuration, well casing, or cement behind casing; any plug added to the well and its depth; any newly drilled interval and its depth; method(s) to demonstrate that the well has mechanical integrity (as applicable); and any deviations from the approved rework plan (as applicable).

For a well plugging plan, include the following information: Reason for the well plugging; number of plugs placed, and their depths; materials used as plugs (e.g., cast iron bridge plug, cement, cement retainer); method to set plugs; and wait-on-cement times, if any. Also provide one or more cost estimates from an independent firm in the business of plugging and abandoning wells to plug the well as described in the plan.

For well plugging affidavit, include the following information: Reason for the well plugging; number of plugs placed, and their depths; materials used as plugs (e.g., cast iron bridge plug, cement, cement retainer); method to set plugs; wait-on-cement times, if any; and any deviations from the approved plugging plan (if applicable).

For conversion to a non-injection well, include the following information: Depths of activity; type of activity; changes to injection well configuration, well casing, or cement behind casing; any plug added to the well and its depth; any newly drilled interval and its depth; depths of new perforations; and method(s) to demonstrate that the well has mechanical integrity (as applicable).

For all of the above activities, include a well sketch depicting the work, results of well tests/logging performed, service company tickets, and any other available information demonstrating how the work was/is to be performed. Also, specify whether depths are below ground surface, relative to Kelly bushing, etc.

CERTIFICATION: This form must be signed and dated by either: a responsible corporate officer for a corporation, by a general partner for a partnership, by the proprietor of a sole proprietorship, or by a principal executive or ranking elected official for a public agency.

PAPERWORK REDUCTION ACT NOTICE: The public reporting and recordkeeping burden for this collection of information is estimated to average between 6.0 and 7.9 hours per response, depending on the injection well class. Burden means the total time, effort, or financial resource expended by persons to generate, maintain, retain, or disclose or provide information to or for a Federal Agency. This includes the time needed to review instructions; develop, acquire, install, and utilize technology and systems for the purposes of collecting, validating, and verifying information, processing and maintaining information, and disclosing and providing information; adjust the existing ways to comply with any previously applicable instructions and requirements; train personnel to be able to respond to the collection of information; search data sources; complete and review the collection of information; and, transmit or otherwise disclose the information. An agency may not conduct or sponsor, and a person is not required to respond to, a collection of information unless it displays a currently valid OMB control number. Send comments on the Agency's need for this information, the accuracy of the provided burden estimates, and any suggested methods for minimizing respondent burden, including the use of automated collection techniques to Director, Collection Strategies Division, U.S. Environmental Protection Agency (2822), 1200 Pennsylvania Ave., NW., Washington, D.C. 20460. Include the OMB control number in any correspondence. Do not send the completed forms to this address.

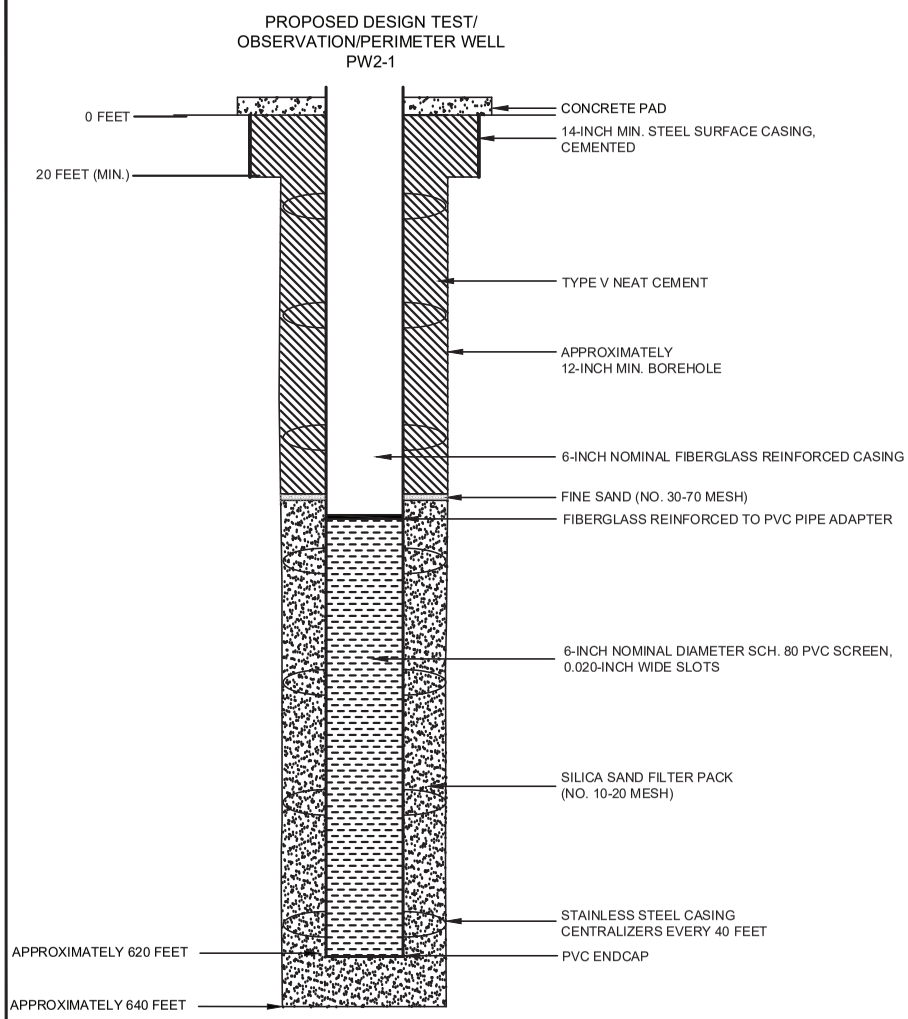

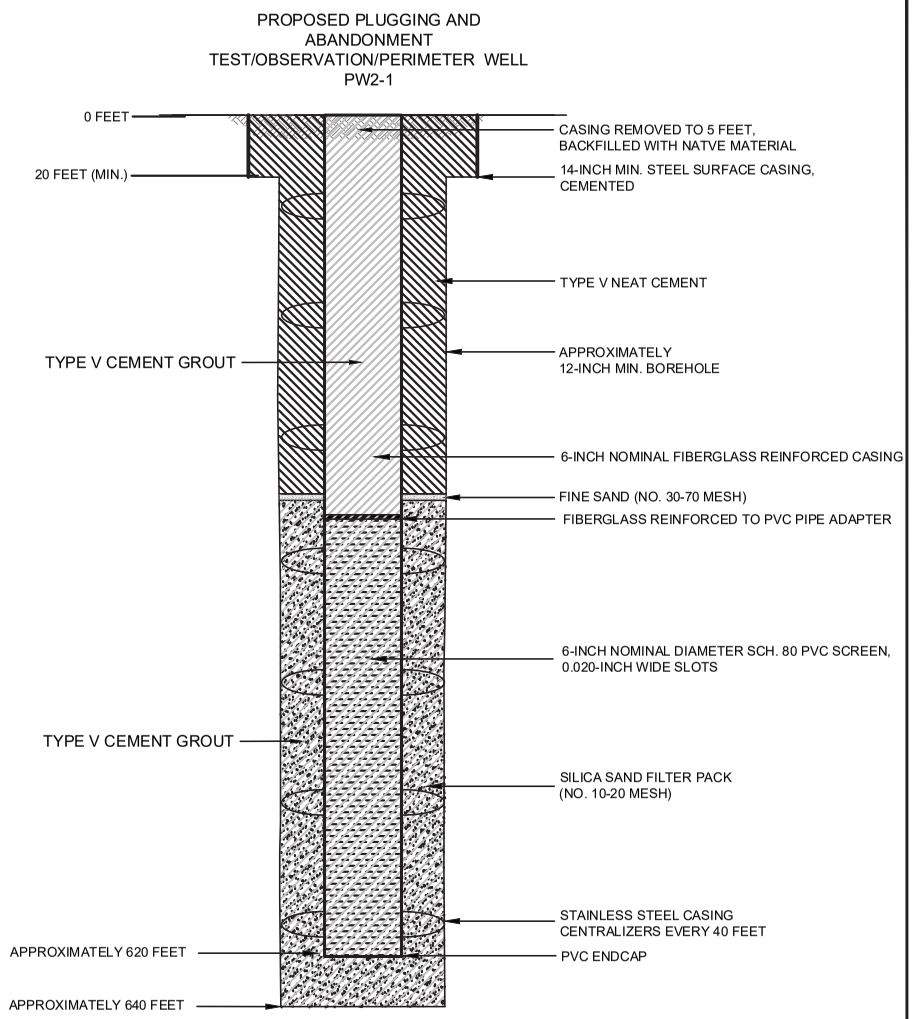

NOTES

1. WELL DESIGN DETAILS ARE BASED ON CORE HOLE AND WELL LOG RECORDS.

HALEY ALDRICH

FLORENCE COPPER, INC.
FLORENCE, ARIZONA

ABANDONMENT SCHEMATIC
TEST/OBSERVATION/PERIMETER
WELL PW2-1

SEPTEMBER 2019
SCALE: AS SHOWN

FIGURE 1

OMB No. 2040-0042 Approval Expires 4/30/2022

United States Environmental Protection Agency

WELL REWORK RECORD, PLUGGING AND ABANDONMENT PLAN, OR PLUGGING AND ABANDONMENT AFFIDAVIT

Name and Address, Phone Number and/or Email of Permittee

Florence Copper Project
1575 W Hunt Hwy,
Florence, AZ 85132

Permit or EPA ID Number	API Number	Full Well Name
R9UIC-AZ3-FY11-1		PW2-2

State	County
Arizona	Pinal

Locate well in two directions from nearest lines of quarter section and drilling unit

Latitude 33.04861906

Surface Location

SW **1/4 of** SE **1/4 of Section** 28 **Township** 4S **Range** 9E

Longitude -111.427608

_____ **ft. from (N/S)** _____ **Line of quarter section**

_____ **ft. from (E/W)** _____ **Line of quarter section.**

Well Class	Timing of Action (pick one)	Type of Action (pick one)
☐ Class I ☐ Class II ☑ Class III ☐ Class V	☑ Notice Prior to Work Date Expected to Commence March 2021 ☐ Report After Work Date Work Ended	☐ Well Rework ☑ Plugging and Abandonment ☐ Conversion to a Non-Injection Well

Provide a narrative description of the work planned to be performed, or that was performed. Use additional pages as necessary. See instructions.

A workover rig capable of performing the required abandonment operations at the required depths will be moved in and set up over the well. The well casing will be inspected to determine the depth to which the well remains open and if any obstructions are present in the casing; the presence and condition of any existing surface casing will also be documented. If necessary, the well casing will be cleaned out to the bottom of the deepest screen or perforation to enable placement of cement seals.

If surface casing is present, an attempt will be made to remove it. If removal of the surface casing is not feasible, it will be left in the hole and perforated as needed to allow an annular seal to be placed to a depth of at least 25 feet bgs. In areas of agricultural use, the surface casing will be cut at least 5 feet bgs and removed.

If the surface casing cannot be removed, it will be perforated from at least 20 feet below the bedrock-LBFU contact to at least 20 feet above the contact; from at least 20 feet below the base of the MFGU to at least 20 feet above the top of the MFGU; and from at least 25 feet bgs to 5 feet bgs.

A tremie pipe will be used to place Type V cement in the open well from the bottom of the well casing to the top of the well casing. Cement retainers, as described above, will be used to force cement grout into the annulus and behind perforated screen intervals, as necessary.

If the well casing has been obstructed, as much cement as possible will be placed from 100 feet below the LBFU-bedrock contact to the top of the casing.

The volume of Type V cement will be recorded and will not be less than the estimated volume of material required to fill each interval. All cement grout will consist of Type V cement, or equivalent approved in accordance with the UIC Permit.

Certification

I certify under the penalty of law that I have personally examined and am familiar with the information submitted in this document and all attachments and that, based on my inquiry of those individuals immediately responsible for obtaining the information, I believe that the information is true, accurate, and complete. I am aware that there are significant penalties for submitting false information, including the possibliity of fine and imprisonment. (Ref. 40 CFR § 144.32)

Name and Official Title *(Please type or print)*	Signature	Date Signed
Dan Johnson, VP - General Manager		10/3/2019

INSTRUCTIONS FOR FORM 7520-19

This form replaces forms 7520-12 and 7520-14. Use this form only when work is planned or has occurred that affects the well's construction or operation as an injection well, including work on the casing, tubing or packer (or for shallow Class V wells, the subsurface fluid emplacement network). Use one form per injection well. While reports or other information developed by contractors or service companies may be attached, this form must be signed by a responsible entity as described at 40 CFR 144.32. Note: operators closing Class V wells should use Form 7520-17.

NAME, ADDRESS, PHONE AND/OR EMAIL OF PERMITTEE: Enter the name and street address, city/town, state, and ZIP code of the permittee. Also provide an email address (if available) and/or a phone number.

PERMIT OR EPA ID NUMBER: Enter the well identification number or permit number assigned to the well by the EPA or the permitting authority.

API NUMBER: Enter the number assigned by the local jurisdiction (usually a State Oil and Gas Agency) using the American Petroleum Institute standard numbering system.

FULL WELL NAME: Enter the full name of the well or project.

Enter the **STATE** and **COUNTY** where the well is located. For States that do not have counties, use the name of that State's equivalent jurisdiction at a more local level.

WELL LOCATION: Fill in the complete township, range, and section to the nearest quarter-quarter section. A township is north or south of the baseline, and a range is east or west of the principal meridian (e.g., T12N, R34W). Also include the distance, in feet, from the nearest north or south line and nearest east or west line of the quarter-section. Also, enter the **latitude** and **longitude** of the well in decimal degrees, to five or six places if possible; be sure to include a negative sign for the longitude of a well in the Western Hemisphere and a negative sign for the latitude of a well in the Southern Hemisphere.

Enter the **WELL CLASS,** i.e., the class of injection well as defined in 40 CFR 144.6.

TIMING OF THE ACTION: Check ***Notice prior to work*** if the activity has not yet occurred (i.e., is planned). Check ***Report after work*** if the activity described has already occurred. As appropriate, include the date the activity is expected to start or the date the activity was completed. (Note this may not be available, e.g., for a plugging plan submitted with a permit application.)

TYPE OF ACTION: Check the appropriate box to describe the kind of activity being reported. Check ***Well Rework*** for work that was/will be performed on the well after it has already been in operation as an injection well. Check ***Plugging and Abandonment*** to report on plans for or descriptions of final closure/plugging after use as an injection well. Check ***Conversion to a Non-Injection Well*** if the well is to be converted to something other than an injection well.

Provide a **NARRATIVE DESCRIPTION** of the work planned to be performed, or that was performed. The narrative should include a description of the main procedures planned or that occurred during the work activity. A service company report, daily report, or similar document may be attached if it includes all the requested information and is clear and legible.

For well reworks, include the following information: The reason for the well rework; depths of activity; type of activity; changes to injection well configuration, well casing, or cement behind casing; any plug added to the well and its depth; any newly drilled interval and its depth; method(s) to demonstrate that the well has mechanical integrity (as applicable); and any deviations from the approved rework plan (as applicable).

For a well plugging plan, include the following information: Reason for the well plugging; number of plugs placed, and their depths; materials used as plugs (e.g., cast iron bridge plug, cement, cement retainer); method to set plugs; and wait-on-cement times, if any. Also provide one or more cost estimates from an independent firm in the business of plugging and abandoning wells to plug the well as described in the plan.

For well plugging affidavit, include the following information: Reason for the well plugging; number of plugs placed, and their depths; materials used as plugs (e.g., cast iron bridge plug, cement, cement retainer); method to set plugs; wait-on-cement times, if any; and any deviations from the approved plugging plan (if applicable).

For conversion to a non-injection well, include the following information: Depths of activity; type of activity; changes to injection well configuration, well casing, or cement behind casing; any plug added to the well and its depth; any newly drilled interval and its depth; depths of new perforations; and method(s) to demonstrate that the well has mechanical integrity (as applicable).

For all of the above activities, include a well sketch depicting the work, results of well tests/logging performed, service company tickets, and any other available information demonstrating how the work was/is to be performed. Also, specify whether depths are below ground surface, relative to Kelly bushing, etc.

CERTIFICATION: This form must be signed and dated by either: a responsible corporate officer for a corporation, by a general partner for a partnership, by the proprietor of a sole proprietorship, or by a principal executive or ranking elected official for a public agency.

PAPERWORK REDUCTION ACT NOTICE: The public reporting and recordkeeping burden for this collection of information is estimated to average between 6.0 and 7.9 hours per response, depending on the injection well class. Burden means the total time, effort, or financial resource expended by persons to generate, maintain, retain, or disclose or provide information to or for a Federal Agency. This includes the time needed to review instructions; develop, acquire, install, and utilize technology and systems for the purposes of collecting, validating, and verifying information, processing and maintaining information, and disclosing and providing information; adjust the existing ways to comply with any previously applicable instructions and requirements; train personnel to be able to respond to the collection of information; search data sources; complete and review the collection of information; and, transmit or otherwise disclose the information. An agency may not conduct or sponsor, and a person is not required to respond to, a collection of information unless it displays a currently valid OMB control number. Send comments on the Agency's need for this information, the accuracy of the provided burden estimates, and any suggested methods for minimizing respondent burden, including the use of automated collection techniques to Director, Collection Strategies Division, U.S. Environmental Protection Agency (2822), 1200 Pennsylvania Ave., NW., Washington, D.C. 20460. Include the OMB control number in any correspondence. Do not send the completed forms to this address.

Saved by: MNICHOLLS Printed: 7/25/2019 7:20 PM Sheet: HA-FIG-A-L(2)
\\HALEYALDRICH.COM\SHARE\PHX_COMMON\PROJECTS\FLORENCE COPPER\132473 FLORENCE GROUNDWATER PERMITTING\CAD\132473_000-OBSERVATION_WELL_CONSTRUCTION DIAGRAM.DWG

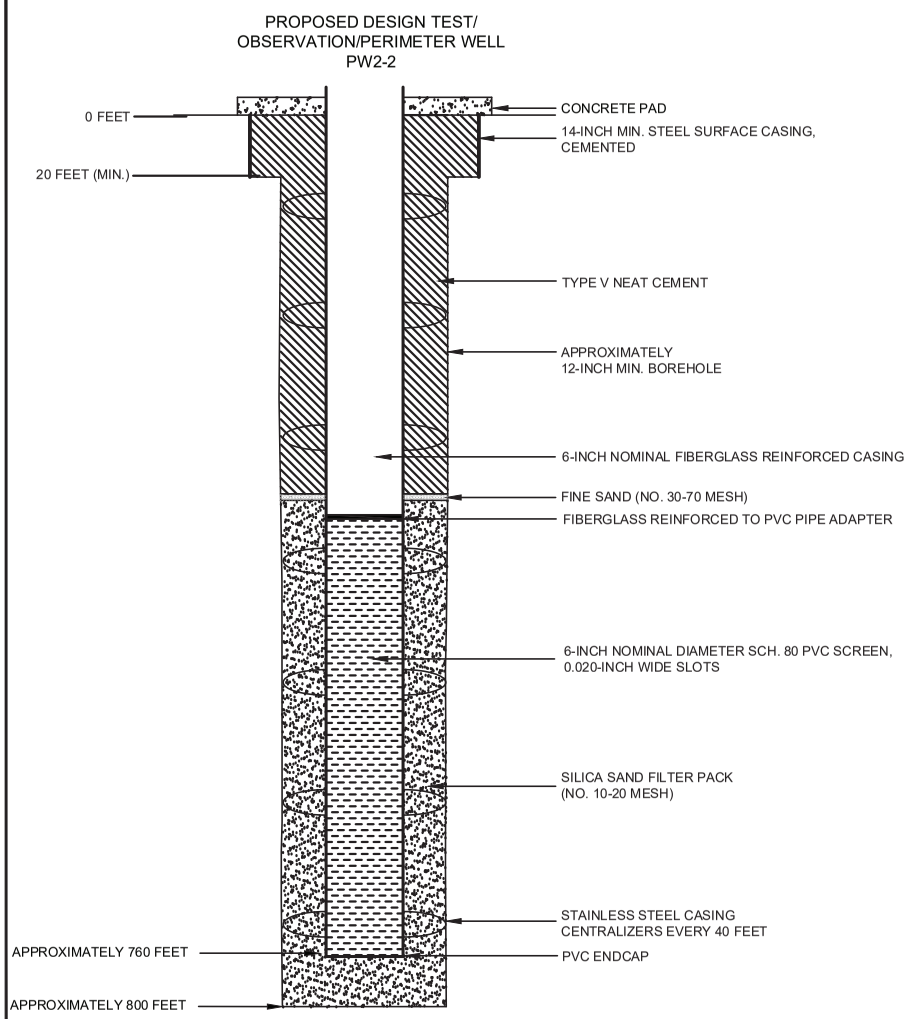

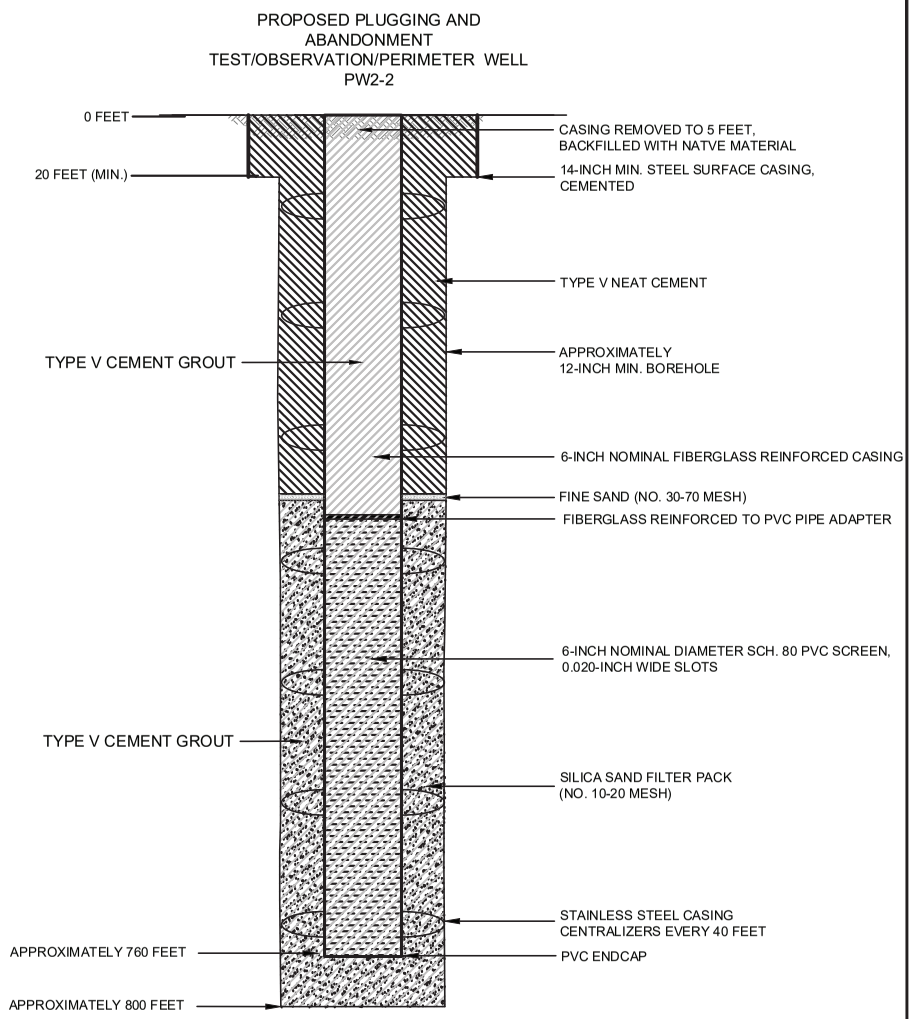

NOTES

1. WELL DESIGN DETAILS ARE BASED ON CORE HOLE AND WELL LOG RECORDS.

HALEY ALDRICH

FLORENCE COPPER, INC.
FLORENCE, ARIZONA

ABANDONMENT SCHEMATIC
TEST/OBSERVATION/PERIMETER
WELL PW2-2

SEPTEMBER 2019
SCALE: AS SHOWN

FIGURE 1

OMB No. 2040-0042 Approval Expires 4/30/2022

United States Environmental Protection Agency

WELL REWORK RECORD, PLUGGING AND ABANDONMENT PLAN, OR PLUGGING AND ABANDONMENT AFFIDAVIT

Name and Address, Phone Number and/or Email of Permittee

Florence Copper Project
1575 W Hunt Hwy,
Florence, AZ 85132

Permit or EPA ID Number	API Number	Full Well Name
R9UIC-AZ3-FY11-1		PW7-1

State	County
Arizona	Pinal

Locate well in two directions from nearest lines of quarter section and drilling unit

Latitude 33.04842523

Surface Location

SE **1/4 of** SW **1/4 of Section** 28 **Township** 4S **Range** 9E

Longitude -111.4309731

_____ **ft. from (N/S)** _____ **Line of quarter section**

_____ **ft. from (E/W)** _____ **Line of quarter section.**

Well Class	Timing of Action (pick one)	Type of Action (pick one)
☐ Class I ☐ Class II ☑ Class III ☐ Class V	☑ Notice Prior to Work Date Expected to Commence March 2021 ☐ Report After Work Date Work Ended	☐ Well Rework ☑ Plugging and Abandonment ☐ Conversion to a Non-Injection Well

Provide a narrative description of the work planned to be performed, or that was performed. Use additional pages as necessary. See instructions.

A workover rig capable of performing the required abandonment operations at the required depths will be moved in and set up over the well. The well casing will be inspected to determine the depth to which the well remains open and if any obstructions are present in the casing; the presence and condition of any existing surface casing will also be documented. If necessary, the well casing will be cleaned out to the bottom of the deepest screen or perforation to enable placement of cement seals.

If surface casing is present, an attempt will be made to remove it. If removal of the surface casing is not feasible, it will be left in the hole and perforated as needed to allow an annular seal to be placed to a depth of at least 25 feet bgs. In areas of agricultural use, the surface casing will be cut at least 5 feet bgs and removed.

If the surface casing cannot be removed, it will be perforated from at least 20 feet below the bedrock-LBFU contact to at least 20 feet above the contact; from at least 20 feet below the base of the MFGU to at least 20 feet above the top of the MFGU; and from at least 25 feet bgs to 5 feet bgs.

A tremie pipe will be used to place Type V cement in the open well from the bottom of the well casing to the top of the well casing. Cement retainers, as described above, will be used to force cement grout into the annulus and behind perforated screen intervals, as necessary.

If the well casing has been obstructed, as much cement as possible will be placed from 100 feet below the LBFU-bedrock contact to the top of the casing.

The volume of Type V cement will be recorded and will not be less than the estimated volume of material required to fill each interval. All cement grout will consist of Type V cement, or equivalent approved in accordance with the UIC Permit.

Certification

I certify under the penalty of law that I have personally examined and am familiar with the information submitted in this document and all attachments and that, based on my inquiry of those individuals immediately responsible for obtaining the information, I believe that the information is true, accurate, and complete. I am aware that there are significant penalties for submitting false information, including the possibliity of fine and imprisonment. (Ref. 40 CFR § 144.32)

Name and Official Title *(Please type or print)*	Signature	Date Signed
Dan Johnson, VP - General Manager		10/3/2019

INSTRUCTIONS FOR FORM 7520-19

This form replaces forms 7520-12 and 7520-14. Use this form only when work is planned or has occurred that affects the well's construction or operation as an injection well, including work on the casing, tubing or packer (or for shallow Class V wells, the subsurface fluid emplacement network). Use one form per injection well. While reports or other information developed by contractors or service companies may be attached, this form must be signed by a responsible entity as described at 40 CFR 144.32. Note: operators closing Class V wells should use Form 7520-17.

NAME, ADDRESS, PHONE AND/OR EMAIL OF PERMITTEE: Enter the name and street address, city/town, state, and ZIP code of the permittee. Also provide an email address (if available) and/or a phone number.

PERMIT OR EPA ID NUMBER: Enter the well identification number or permit number assigned to the well by the EPA or the permitting authority.

API NUMBER: Enter the number assigned by the local jurisdiction (usually a State Oil and Gas Agency) using the American Petroleum Institute standard numbering system.

FULL WELL NAME: Enter the full name of the well or project.

Enter the **STATE** and **COUNTY** where the well is located. For States that do not have counties, use the name of that State's equivalent jurisdiction at a more local level.

WELL LOCATION: Fill in the complete township, range, and section to the nearest quarter-quarter section. A township is north or south of the baseline, and a range is east or west of the principal meridian (e.g., T12N, R34W). Also include the distance, in feet, from the nearest north or south line and nearest east or west line of the quarter-section. Also, enter the **latitude** and **longitude** of the well in decimal degrees, to five or six places if possible; be sure to include a negative sign for the longitude of a well in the Western Hemisphere and a negative sign for the latitude of a well in the Southern Hemisphere.

Enter the **WELL CLASS,** i.e., the class of injection well as defined in 40 CFR 144.6.

TIMING OF THE ACTION: Check ***Notice prior to work*** if the activity has not yet occurred (i.e., is planned). Check ***Report after work*** if the activity described has already occurred. As appropriate, include the date the activity is expected to start or the date the activity was completed. (Note this may not be available, e.g., for a plugging plan submitted with a permit application.)

TYPE OF ACTION: Check the appropriate box to describe the kind of activity being reported. Check ***Well Rework*** for work that was/will be performed on the well after it has already been in operation as an injection well. Check ***Plugging and Abandonment*** to report on plans for or descriptions of final closure/plugging after use as an injection well. Check ***Conversion to a Non-Injection Well*** if the well is to be converted to something other than an injection well.

Provide a **NARRATIVE DESCRIPTION** of the work planned to be performed, or that was performed. The narrative should include a description of the main procedures planned or that occurred during the work activity. A service company report, daily report, or similar document may be attached if it includes all the requested information and is clear and legible.

For well reworks, include the following information: The reason for the well rework; depths of activity; type of activity; changes to injection well configuration, well casing, or cement behind casing; any plug added to the well and its depth; any newly drilled interval and its depth; method(s) to demonstrate that the well has mechanical integrity (as applicable); and any deviations from the approved rework plan (as applicable).

For a well plugging plan, include the following information: Reason for the well plugging; number of plugs placed, and their depths; materials used as plugs (e.g., cast iron bridge plug, cement, cement retainer); method to set plugs; and wait-on-cement times, if any. Also provide one or more cost estimates from an independent firm in the business of plugging and abandoning wells to plug the well as described in the plan.

For well plugging affidavit, include the following information: Reason for the well plugging; number of plugs placed, and their depths; materials used as plugs (e.g., cast iron bridge plug, cement, cement retainer); method to set plugs; wait-on-cement times, if any; and any deviations from the approved plugging plan (if applicable).

For conversion to a non-injection well, include the following information: Depths of activity; type of activity; changes to injection well configuration, well casing, or cement behind casing; any plug added to the well and its depth; any newly drilled interval and its depth; depths of new perforations; and method(s) to demonstrate that the well has mechanical integrity (as applicable).

For all of the above activities, include a well sketch depicting the work, results of well tests/logging performed, service company tickets, and any other available information demonstrating how the work was/is to be performed. Also, specify whether depths are below ground surface, relative to Kelly bushing, etc.

CERTIFICATION: This form must be signed and dated by either: a responsible corporate officer for a corporation, by a general partner for a partnership, by the proprietor of a sole proprietorship, or by a principal executive or ranking elected official for a public agency.

PAPERWORK REDUCTION ACT NOTICE: The public reporting and recordkeeping burden for this collection of information is estimated to average between 6.0 and 7.9 hours per response, depending on the injection well class. Burden means the total time, effort, or financial resource expended by persons to generate, maintain, retain, or disclose or provide information to or for a Federal Agency. This includes the time needed to review instructions; develop, acquire, install, and utilize technology and systems for the purposes of collecting, validating, and verifying information, processing and maintaining information, and disclosing and providing information; adjust the existing ways to comply with any previously applicable instructions and requirements; train personnel to be able to respond to the collection of information; search data sources; complete and review the collection of information; and, transmit or otherwise disclose the information. An agency may not conduct or sponsor, and a person is not required to respond to, a collection of information unless it displays a currently valid OMB control number. Send comments on the Agency's need for this information, the accuracy of the provided burden estimates, and any suggested methods for minimizing respondent burden, including the use of automated collection techniques to Director, Collection Strategies Division, U.S. Environmental Protection Agency (2822), 1200 Pennsylvania Ave., NW., Washington, D.C. 20460. Include the OMB control number in any correspondence. Do not send the completed forms to this address.

Saved by: MNICHOLLS Printed: 7/25/2019 7:20 PM Sheet: HA-FIG-A-L(2)
\\HALEYALDRICH.COM\SHARE\PHX_COMMON\PROJECTS\FLORENCE COPPER\132473 FLORENCE GROUNDWATER PERMITTING\CAD\132473_000-OBSERVATION_WELL_CONSTRUCTION DIAGRAM.DWG

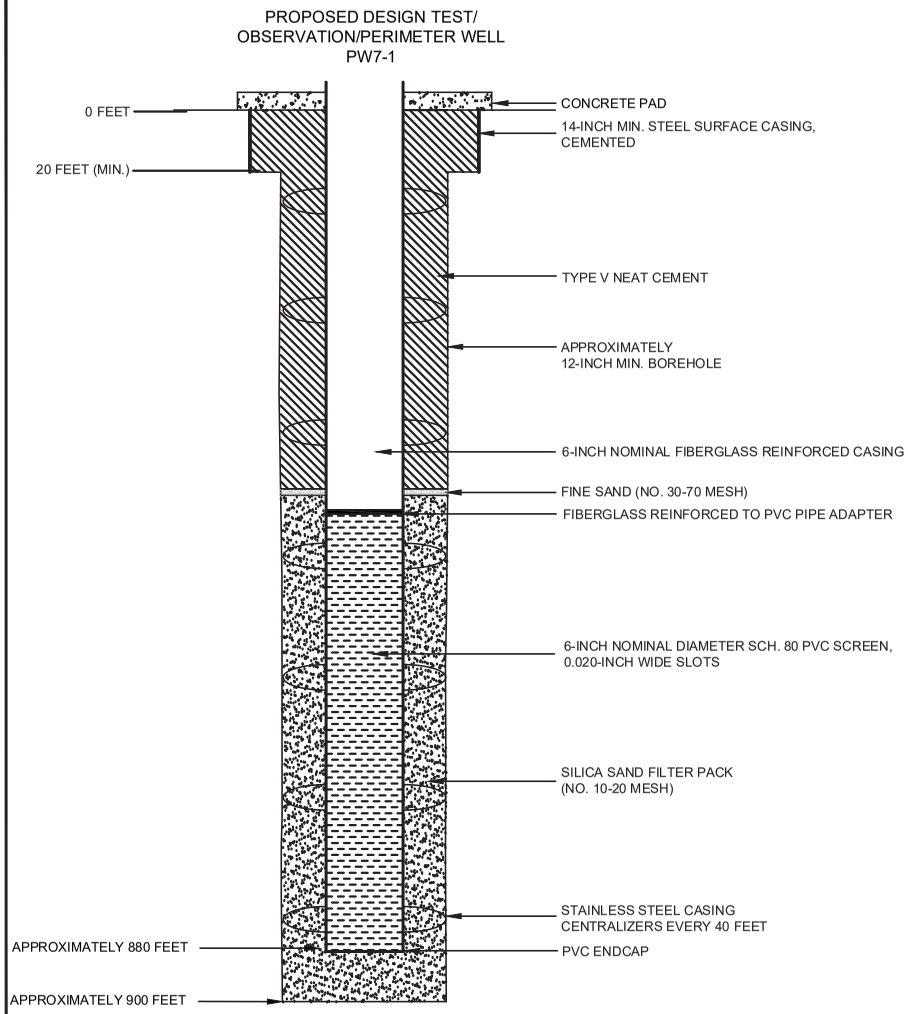

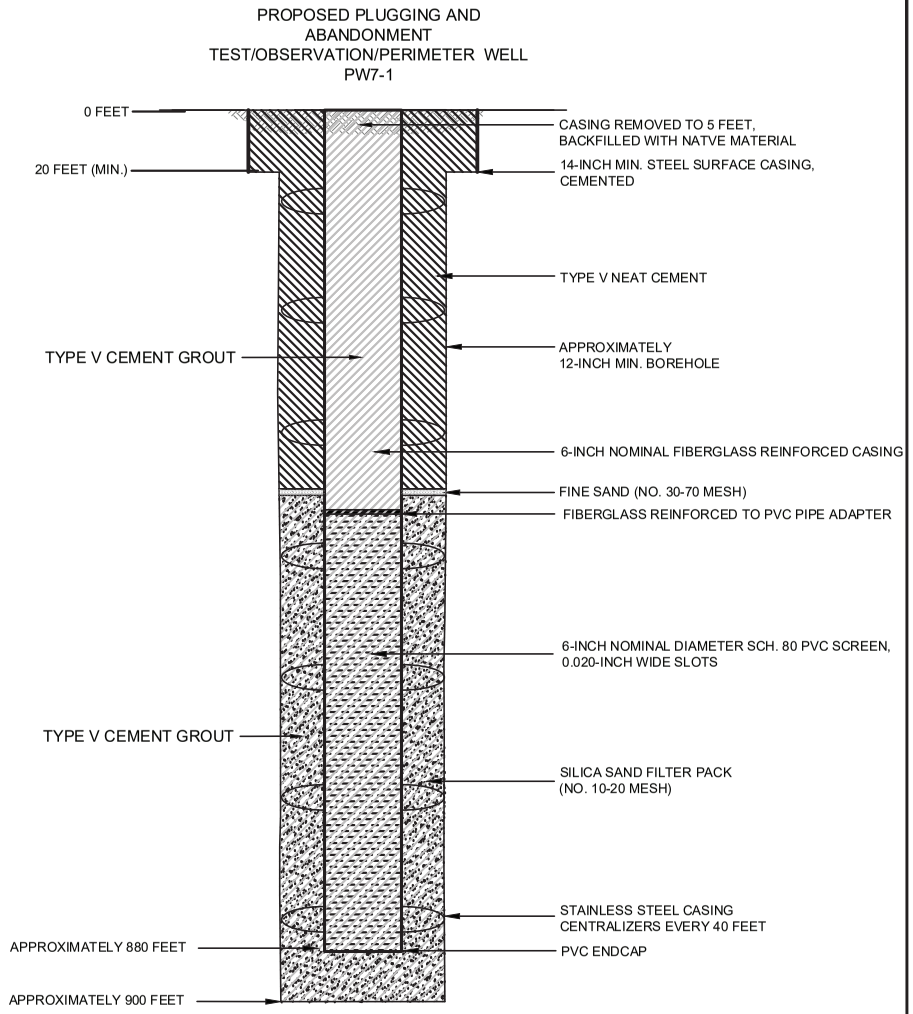

NOTES

1. WELL DESIGN DETAILS ARE BASED ON CORE HOLE AND WELL LOG RECORDS.

HALEY ALDRICH

FLORENCE COPPER, INC.
FLORENCE, ARIZONA

ABANDONMENT SCHEMATIC
TEST/OBSERVATION/PERIMETER
WELL PW7-1

SEPTEMBER 2019
SCALE: AS SHOWN

FIGURE 1

OMB No. 2040-0042 Approval Expires 4/30/2022

United States Environmental Protection Agency

WELL REWORK RECORD, PLUGGING AND ABANDONMENT PLAN, OR PLUGGING AND ABANDONMENT AFFIDAVIT

Name and Address, Phone Number and/or Email of Permittee

Florence Copper Project
1575 W Hunt Hwy,
Florence, AZ 85132

Permit or EPA ID Number	API Number	Full Well Name
R9UIC-AZ3-FY11-1		Airshaft

State	County
Arizona	Pinal

Locate well in two directions from nearest lines of quarter section and drilling unit

Latitude 33.05114647

Surface Location

NW **1/4 of** SE **1/4 of Section** 28 **Township** 4S **Range** 9E

Longitude -111.4292405

_____ **ft. from (N/S)** _____ **Line of quarter section**

_____ **ft. from (E/W)** _____ **Line of quarter section.**

Well Class	Timing of Action (pick one)	Type of Action (pick one)
☐ Class I ☐ Class II ☑ Class III ☐ Class V	☑ Notice Prior to Work Date Expected to Commence March 2021 ☐ Report After Work Date Work Ended	☐ Well Rework ☑ Plugging and Abandonment ☐ Conversion to a Non-Injection Well

Provide a narrative description of the work planned to be performed, or that was performed. Use additional pages as necessary. See instructions.

A workover rig capable of performing the required abandonment operations at the required depths will be moved in and set up over the shaft. The casing will be inspected to determine the depth to which the well remains open and if any obstructions are present in the casing; the presence and condition of any existing surface casing will also be documented. If necessary, the casing will be cleaned out to the bottom to enable placement of cement seals. In areas of agricultural use, the casing will be cut at least 5 feet bgs and removed.

A tremie pipe will be used to place Type V cement in the shaft from the bottom of the well casing to the top of the casing.

If the casing has been obstructed, as much cement as possible will be placed from 100 feet below the LBFU-bedrock contact to the top of the casing.

The volume of Type V cement will be recorded and will not be less than the estimated volume of material required to fill each interval. All cement grout will consist of Type V cement, or equivalent approved in accordance with the UIC Permit.

Certification

I certify under the penalty of law that I have personally examined and am familiar with the information submitted in this document and all attachments and that, based on my inquiry of those individuals immediately responsible for obtaining the information, I believe that the information is true, accurate, and complete. I am aware that there are significant penalties for submitting false information, including the possibliity of fine and imprisonment. (Ref. 40 CFR § 144.32)

Name and Official Title *(Please type or print)*	Signature	Date Signed
Dan Johnson, VP - General Manager		10/3/2019

INSTRUCTIONS FOR FORM 7520-19

This form replaces forms 7520-12 and 7520-14. Use this form only when work is planned or has occurred that affects the well's construction or operation as an injection well, including work on the casing, tubing or packer (or for shallow Class V wells, the subsurface fluid emplacement network). Use one form per injection well. While reports or other information developed by contractors or service companies may be attached, this form must be signed by a responsible entity as described at 40 CFR 144.32. Note: operators closing Class V wells should use Form 7520-17.

NAME, ADDRESS, PHONE AND/OR EMAIL OF PERMITTEE: Enter the name and street address, city/town, state, and ZIP code of the permittee. Also provide an email address (if available) and/or a phone number.

PERMIT OR EPA ID NUMBER: Enter the well identification number or permit number assigned to the well by the EPA or the permitting authority.

API NUMBER: Enter the number assigned by the local jurisdiction (usually a State Oil and Gas Agency) using the American Petroleum Institute standard numbering system.

FULL WELL NAME: Enter the full name of the well or project.

Enter the **STATE** and **COUNTY** where the well is located. For States that do not have counties, use the name of that State's equivalent jurisdiction at a more local level.

WELL LOCATION: Fill in the complete township, range, and section to the nearest quarter-quarter section. A township is north or south of the baseline, and a range is east or west of the principal meridian (e.g., T12N, R34W). Also include the distance, in feet, from the nearest north or south line and nearest east or west line of the quarter-section. Also, enter the **latitude** and **longitude** of the well in decimal degrees, to five or six places if possible; be sure to include a negative sign for the longitude of a well in the Western Hemisphere and a negative sign for the latitude of a well in the Southern Hemisphere.

Enter the **WELL CLASS,** i.e., the class of injection well as defined in 40 CFR 144.6.

TIMING OF THE ACTION: Check ***Notice prior to work*** if the activity has not yet occurred (i.e., is planned). Check ***Report after work*** if the activity described has already occurred. As appropriate, include the date the activity is expected to start or the date the activity was completed. (Note this may not be available, e.g., for a plugging plan submitted with a permit application.)

TYPE OF ACTION: Check the appropriate box to describe the kind of activity being reported. Check ***Well Rework*** for work that was/will be performed on the well after it has already been in operation as an injection well. Check ***Plugging and Abandonment*** to report on plans for or descriptions of final closure/plugging after use as an injection well. Check ***Conversion to a Non-Injection Well*** if the well is to be converted to something other than an injection well.

Provide a **NARRATIVE DESCRIPTION** of the work planned to be performed, or that was performed. The narrative should include a description of the main procedures planned or that occurred during the work activity. A service company report, daily report, or similar document may be attached if it includes all the requested information and is clear and legible.

For well reworks, include the following information: The reason for the well rework; depths of activity; type of activity; changes to injection well configuration, well casing, or cement behind casing; any plug added to the well and its depth; any newly drilled interval and its depth; method(s) to demonstrate that the well has mechanical integrity (as applicable); and any deviations from the approved rework plan (as applicable).

For a well plugging plan, include the following information: Reason for the well plugging; number of plugs placed, and their depths; materials used as plugs (e.g., cast iron bridge plug, cement, cement retainer); method to set plugs; and wait-on-cement times, if any. Also provide one or more cost estimates from an independent firm in the business of plugging and abandoning wells to plug the well as described in the plan.

For well plugging affidavit, include the following information: Reason for the well plugging; number of plugs placed, and their depths; materials used as plugs (e.g., cast iron bridge plug, cement, cement retainer); method to set plugs; wait-on-cement times, if any; and any deviations from the approved plugging plan (if applicable).

For conversion to a non-injection well, include the following information: Depths of activity; type of activity; changes to injection well configuration, well casing, or cement behind casing; any plug added to the well and its depth; any newly drilled interval and its depth; depths of new perforations; and method(s) to demonstrate that the well has mechanical integrity (as applicable).

For all of the above activities, include a well sketch depicting the work, results of well tests/logging performed, service company tickets, and any other available information demonstrating how the work was/is to be performed. Also, specify whether depths are below ground surface, relative to Kelly bushing, etc.

CERTIFICATION: This form must be signed and dated by either: a responsible corporate officer for a corporation, by a general partner for a partnership, by the proprietor of a sole proprietorship, or by a principal executive or ranking elected official for a public agency.

PAPERWORK REDUCTION ACT NOTICE: The public reporting and recordkeeping burden for this collection of information is estimated to average between 6.0 and 7.9 hours per response, depending on the injection well class. Burden means the total time, effort, or financial resource expended by persons to generate, maintain, retain, or disclose or provide information to or for a Federal Agency. This includes the time needed to review instructions; develop, acquire, install, and utilize technology and systems for the purposes of collecting, validating, and verifying information, processing and maintaining information, and disclosing and providing information; adjust the existing ways to comply with any previously applicable instructions and requirements; train personnel to be able to respond to the collection of information; search data sources; complete and review the collection of information; and, transmit or otherwise disclose the information. An agency may not conduct or sponsor, and a person is not required to respond to, a collection of information unless it displays a currently valid OMB control number. Send comments on the Agency's need for this information, the accuracy of the provided burden estimates, and any suggested methods for minimizing respondent burden, including the use of automated collection techniques to Director, Collection Strategies Division, U.S. Environmental Protection Agency (2822), 1200 Pennsylvania Ave., NW., Washington, D.C. 20460. Include the OMB control number in any correspondence. Do not send the completed forms to this address.

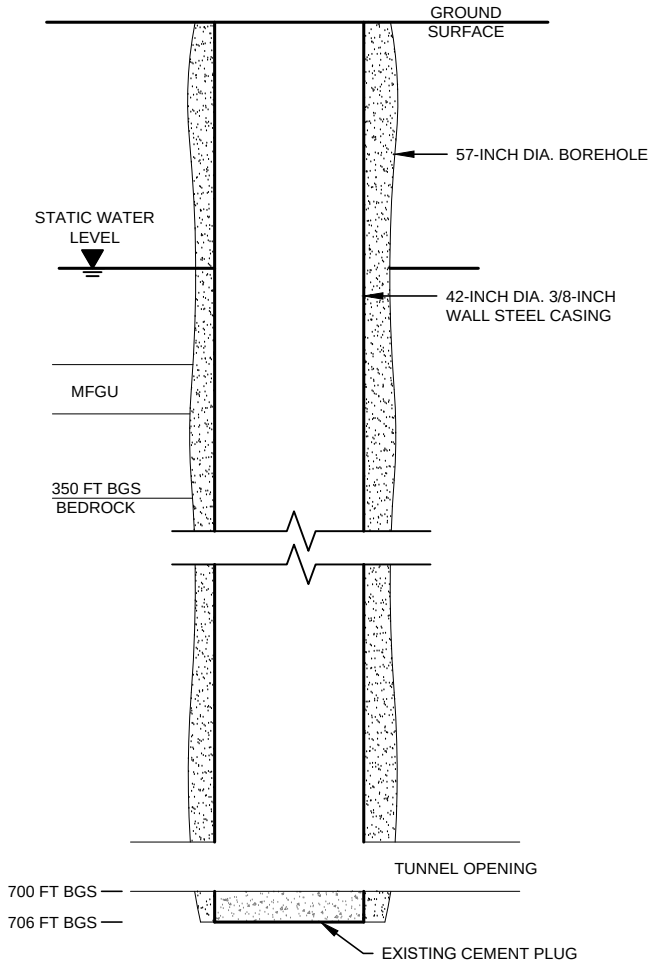

1 **CONOCO NO.2 SHAFT**
SCALE: NTS

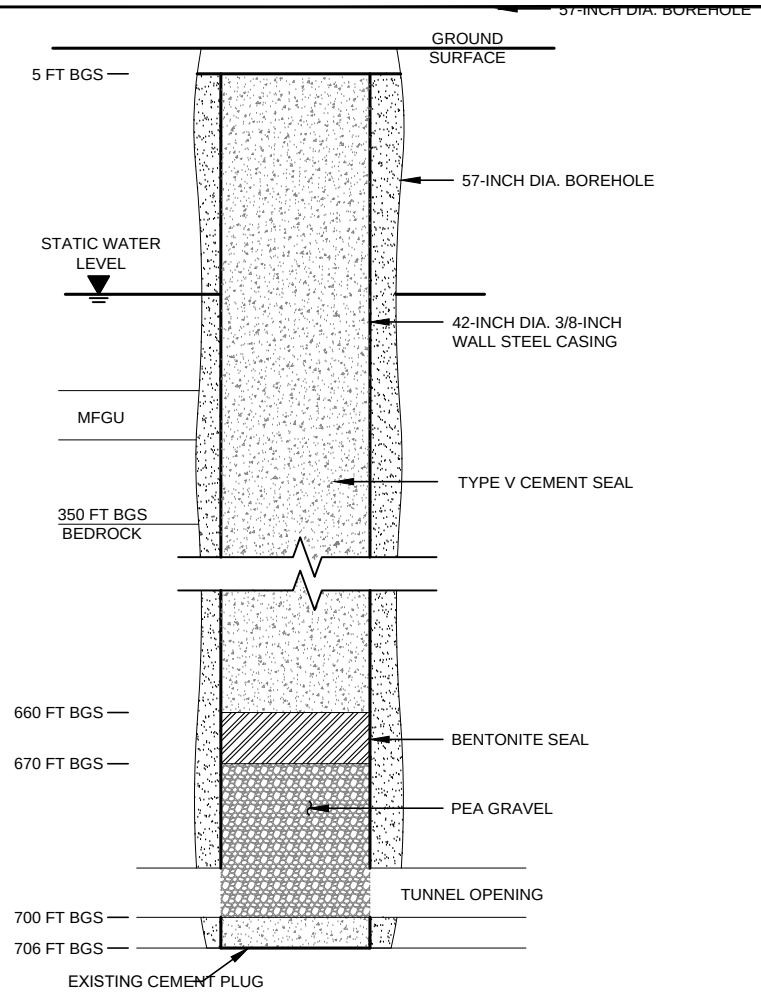

2 **CONOCO NO.2 SHAFT ABANDONMENT DETAIL**
SCALE: NTS

HALEY ALDRICH

FLORENCE COPPER
UIC PERMIT APPLICATION

AIRSHAFT (CONOCO NO.2 SHAFT)
ABANDONMENT DETAIL

SCALE: AS SHOWN
OCTOBER 2019

FIGURE 1

OMB No. 2040-0042 Approval Expires 4/30/2022

United States Environmental Protection Agency

WELL REWORK RECORD, PLUGGING AND ABANDONMENT PLAN, OR PLUGGING AND ABANDONMENT AFFIDAVIT

Name and Address, Phone Number and/or Email of Permittee

Florence Copper Project
1575 W Hunt Hwy,
Florence, AZ 85132

Permit or EPA ID Number	API Number	Full Well Name
R9UIC-AZ3-FY11-1		Shaft No.1

State	County
Arizona	Pinal

Locate well in two directions from nearest lines of quarter section and drilling unit

Latitude 33.05091148

Surface Location

NW **1/4 of** SE **1/4 of Section** 28 **Township** 4S **Range** 9E

Longitude -111.4292428

_____ **ft. from (N/S)** _____ **Line of quarter section**

_____ **ft. from (E/W)** _____ **Line of quarter section.**

Well Class	Timing of Action (pick one)	Type of Action (pick one)
☐ Class I ☐ Class II ☑ Class III ☐ Class V	☑ Notice Prior to Work Date Expected to Commence March 2021 ☐ Report After Work Date Work Ended	☐ Well Rework ☑ Plugging and Abandonment ☐ Conversion to a Non-Injection Well

Provide a narrative description of the work planned to be performed, or that was performed. Use additional pages as necessary. See instructions.

A workover rig capable of performing the required abandonment operations at the required depths will be moved in and set up over the shaft. The casing will be inspected to determine the depth to which the well remains open and if any obstructions are present in the casing; the presence and condition of any existing surface casing will also be documented. If necessary, the casing will be cleaned out to the bottom to enable placement of cement seals. In areas of agricultural use, the casing will be cut at least 5 feet bgs and removed.

A tremie pipe will be used to place Type V cement in the shaft from the bottom of the well casing to the top of the casing.

If the casing has been obstructed, as much cement as possible will be placed from 100 feet below the LBFU-bedrock contact to the top of the casing.

The volume of Type V cement will be recorded and will not be less than the estimated volume of material required to fill each interval. All cement grout will consist of Type V cement, or equivalent approved in accordance with the UIC Permit.

Certification

I certify under the penalty of law that I have personally examined and am familiar with the information submitted in this document and all attachments and that, based on my inquiry of those individuals immediately responsible for obtaining the information, I believe that the information is true, accurate, and complete. I am aware that there are significant penalties for submitting false information, including the possibliity of fine and imprisonment. (Ref. 40 CFR § 144.32)

Name and Official Title *(Please type or print)*	Signature	Date Signed
Dan Johnson, VP - General Manager		10/3/2019

INSTRUCTIONS FOR FORM 7520-19

This form replaces forms 7520-12 and 7520-14. Use this form only when work is planned or has occurred that affects the well's construction or operation as an injection well, including work on the casing, tubing or packer (or for shallow Class V wells, the subsurface fluid emplacement network). Use one form per injection well. While reports or other information developed by contractors or service companies may be attached, this form must be signed by a responsible entity as described at 40 CFR 144.32. Note: operators closing Class V wells should use Form 7520-17.

NAME, ADDRESS, PHONE AND/OR EMAIL OF PERMITTEE: Enter the name and street address, city/town, state, and ZIP code of the permittee. Also provide an email address (if available) and/or a phone number.

PERMIT OR EPA ID NUMBER: Enter the well identification number or permit number assigned to the well by the EPA or the permitting authority.

API NUMBER: Enter the number assigned by the local jurisdiction (usually a State Oil and Gas Agency) using the American Petroleum Institute standard numbering system.

FULL WELL NAME: Enter the full name of the well or project.

Enter the **STATE** and **COUNTY** where the well is located. For States that do not have counties, use the name of that State's equivalent jurisdiction at a more local level.

WELL LOCATION: Fill in the complete township, range, and section to the nearest quarter-quarter section. A township is north or south of the baseline, and a range is east or west of the principal meridian (e.g., T12N, R34W). Also include the distance, in feet, from the nearest north or south line and nearest east or west line of the quarter-section. Also, enter the **latitude** and **longitude** of the well in decimal degrees, to five or six places if possible; be sure to include a negative sign for the longitude of a well in the Western Hemisphere and a negative sign for the latitude of a well in the Southern Hemisphere.

Enter the **WELL CLASS,** i.e., the class of injection well as defined in 40 CFR 144.6.

TIMING OF THE ACTION: Check ***Notice prior to work*** if the activity has not yet occurred (i.e., is planned). Check ***Report after work*** if the activity described has already occurred. As appropriate, include the date the activity is expected to start or the date the activity was completed. (Note this may not be available, e.g., for a plugging plan submitted with a permit application.)

TYPE OF ACTION: Check the appropriate box to describe the kind of activity being reported. Check ***Well Rework*** for work that was/will be performed on the well after it has already been in operation as an injection well. Check ***Plugging and Abandonment*** to report on plans for or descriptions of final closure/plugging after use as an injection well. Check ***Conversion to a Non-Injection Well*** if the well is to be converted to something other than an injection well.

Provide a **NARRATIVE DESCRIPTION** of the work planned to be performed, or that was performed. The narrative should include a description of the main procedures planned or that occurred during the work activity. A service company report, daily report, or similar document may be attached if it includes all the requested information and is clear and legible.

For well reworks, include the following information: The reason for the well rework; depths of activity; type of activity; changes to injection well configuration, well casing, or cement behind casing; any plug added to the well and its depth; any newly drilled interval and its depth; method(s) to demonstrate that the well has mechanical integrity (as applicable); and any deviations from the approved rework plan (as applicable).

For a well plugging plan, include the following information: Reason for the well plugging; number of plugs placed, and their depths; materials used as plugs (e.g., cast iron bridge plug, cement, cement retainer); method to set plugs; and wait-on-cement times, if any. Also provide one or more cost estimates from an independent firm in the business of plugging and abandoning wells to plug the well as described in the plan.

For well plugging affidavit, include the following information: Reason for the well plugging; number of plugs placed, and their depths; materials used as plugs (e.g., cast iron bridge plug, cement, cement retainer); method to set plugs; wait-on-cement times, if any; and any deviations from the approved plugging plan (if applicable).

For conversion to a non-injection well, include the following information: Depths of activity; type of activity; changes to injection well configuration, well casing, or cement behind casing; any plug added to the well and its depth; any newly drilled interval and its depth; depths of new perforations; and method(s) to demonstrate that the well has mechanical integrity (as applicable).

For all of the above activities, include a well sketch depicting the work, results of well tests/logging performed, service company tickets, and any other available information demonstrating how the work was/is to be performed. Also, specify whether depths are below ground surface, relative to Kelly bushing, etc.

CERTIFICATION: This form must be signed and dated by either: a responsible corporate officer for a corporation, by a general partner for a partnership, by the proprietor of a sole proprietorship, or by a principal executive or ranking elected official for a public agency.

PAPERWORK REDUCTION ACT NOTICE: The public reporting and recordkeeping burden for this collection of information is estimated to average between 6.0 and 7.9 hours per response, depending on the injection well class. Burden means the total time, effort, or financial resource expended by persons to generate, maintain, retain, or disclose or provide information to or for a Federal Agency. This includes the time needed to review instructions; develop, acquire, install, and utilize technology and systems for the purposes of collecting, validating, and verifying information, processing and maintaining information, and disclosing and providing information; adjust the existing ways to comply with any previously applicable instructions and requirements; train personnel to be able to respond to the collection of information; search data sources; complete and review the collection of information; and, transmit or otherwise disclose the information. An agency may not conduct or sponsor, and a person is not required to respond to, a collection of information unless it displays a currently valid OMB control number. Send comments on the Agency's need for this information, the accuracy of the provided burden estimates, and any suggested methods for minimizing respondent burden, including the use of automated collection techniques to Director, Collection Strategies Division, U.S. Environmental Protection Agency (2822), 1200 Pennsylvania Ave., NW., Washington, D.C. 20460. Include the OMB control number in any correspondence. Do not send the completed forms to this address.

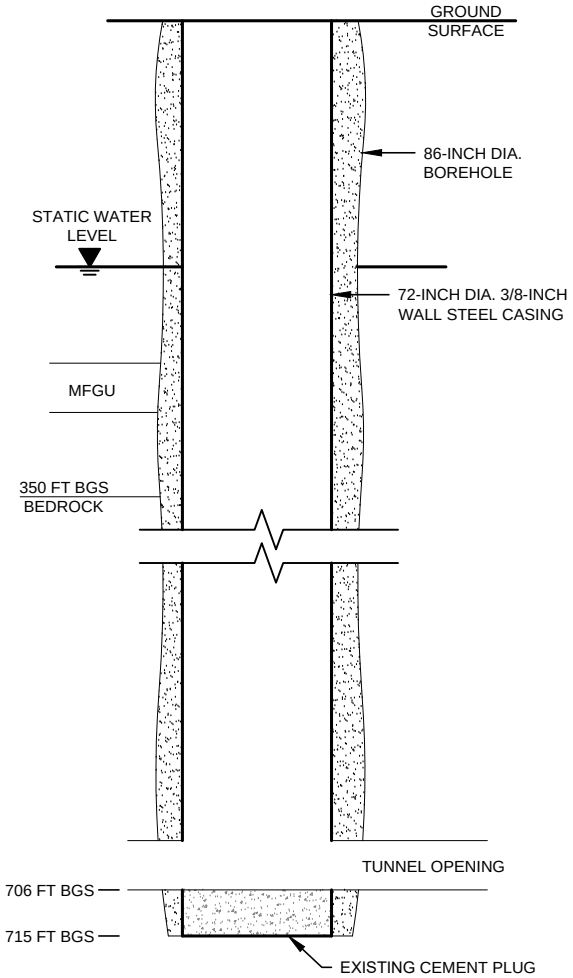

1 **CONOCO NO.1 SHAFT**
SCALE: NTS

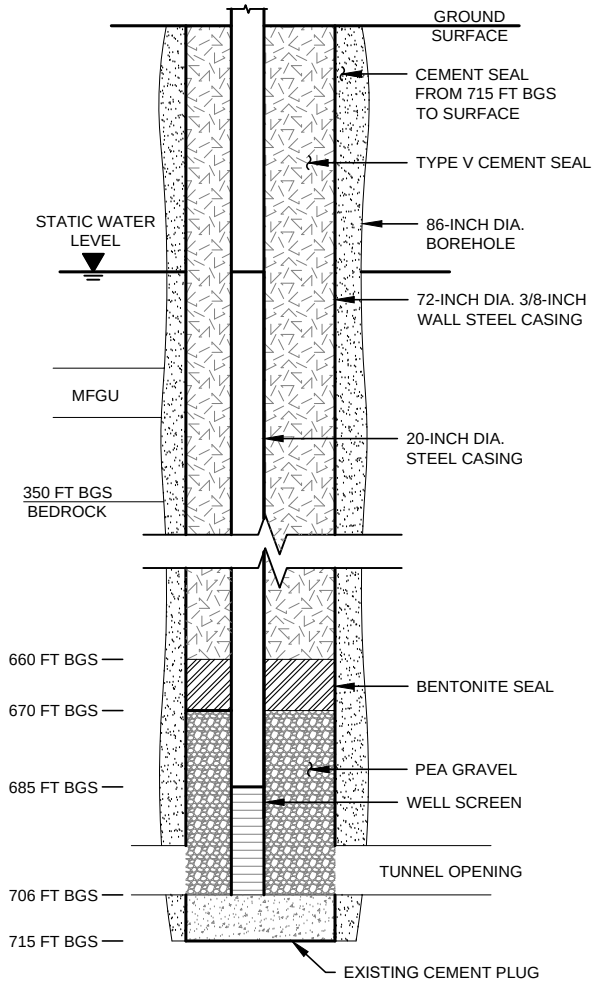

2 **SHAFT NO.1 WELL**
SCALE: NTS

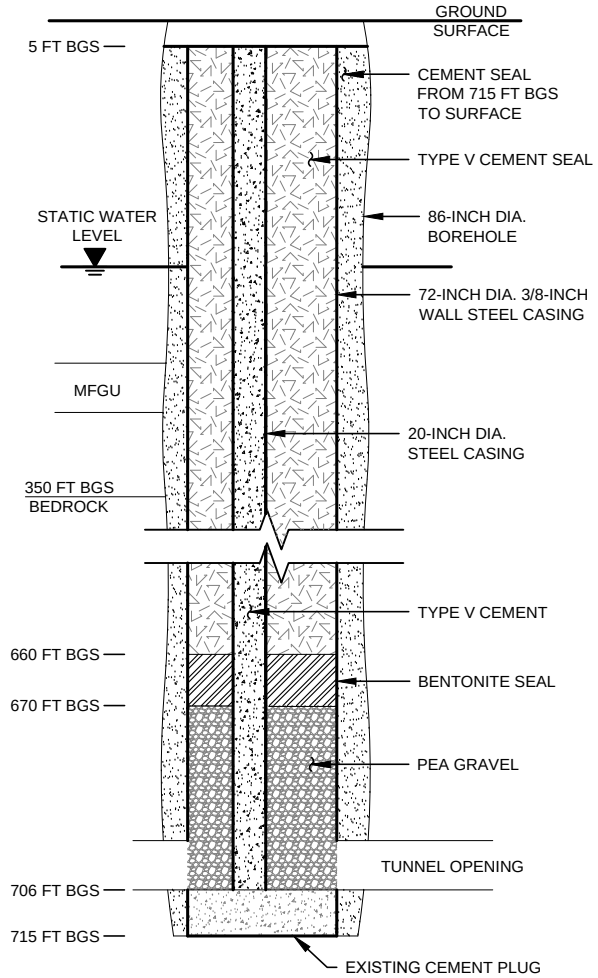

3 **SHAFT NO.1 WELL ABANDONMENT DESIGN**
SCALE: NTS

HALEY ALDRICH

FLORENCE COPPER
UIC PERMIT APPLICATION

CONOCO SHAFT NO.1 RECOVERY
WELL AND ABANDONMENT DETAIL

SCALE: AS SHOWN
OCTOBER 2019

FIGURE 1

EXHIBIT E-3

Plugging and Abandonment Forms for Core Holes within AOR

OMB No. 2040-0042 Approval Expires 4/30/2022

United States Environmental Protection Agency

WELL REWORK RECORD, PLUGGING AND ABANDONMENT PLAN, OR PLUGGING AND ABANDONMENT AFFIDAVIT

Name and Address, Phone Number and/or Email of Permittee

Florence Copper Project
1575 W Hunt Hwy,
Florence, AZ 85132

Permit or EPA ID Number	API Number	Full Well Name
R9UIC-AZ3-FY11-1		5

State	County
Arizona	Pinal

Locate well in two directions from nearest lines of quarter section and drilling unit

Latitude 33.05494382

Longitude -111.4338705

Surface Location

SE **1/4 of** NW **1/4 of Section** 28 **Township** 4S **Range** 9E

_____ **ft. from (N/S)** _____ **Line of quarter section**

_____ **ft. from (E/W)** _____ **Line of quarter section.**

Well Class	Timing of Action (pick one)	Type of Action (pick one)
☐ Class I ☐ Class II ☑ Class III ☐ Class V	☑ Notice Prior to Work Date Expected to Commence March 2021 ☐ Report After Work Date Work Ended	☐ Well Rework ☑ Plugging and Abandonment ☐ Conversion to a Non-Injection Well

Provide a narrative description of the work planned to be performed, or that was performed. Use additional pages as necessary. See instructions.

A workover rig capable of performing the required abandonment operations at the required depths will be moved in and set up over the core hole. The core hole will be inspected to determine the depth to which the hole remains open and if any obstructions are present in the core hole; the presence and condition of any existing collar will also be documented. If necessary, the core hole will be cleaned out to a depth of at least 100 feet below the bedrock-LBFU contact to enable placement of cement seals.

If collar is present, an attempt will be made to remove it. If removal of the collar is not feasible, it will be left in the hole and perforated as needed to allow an annular seal to be placed to a depth of at least 25 feet bgs. In areas of agricultural use, the surface casing will be cut at least 5 feet bgs and removed.

If the collar cannot be removed, it will be perforated from at least 20 feet below the bedrock-LBFU contact to at least 20 feet above the contact; from at least 20 feet below the base of the MFGU to at least 20 feet above the top of the MFGU; and from at least 25 feet bgs to 5 feet bgs.

A tremie pipe will be used to place Type V cement in the open core hole from the bottom of the core hole to the top of the core hole. Cement retainers, as described above, will be used to force cement grout into the annulus and behind perforated intervals, as necessary.

If the hole has been obstructed, as much cement as possible will be placed from 100 feet below the LBFU-bedrock contact to the top of the core hole.

The volume of Type V cement will be recorded and will not be less than the estimated volume of material required to fill each interval. All cement grout will consist of Type V cement, or equivalent approved in accordance with the UIC Permit.

Certification

I certify under the penalty of law that I have personally examined and am familiar with the information submitted in this document and all attachments and that, based on my inquiry of those individuals immediately responsible for obtaining the information, I believe that the information is true, accurate, and complete. I am aware that there are significant penalties for submitting false information, including the possibliity of fine and imprisonment. (Ref. 40 CFR § 144.32)

Name and Official Title *(Please type or print)*	Signature	Date Signed
Dan Johnson, VP - General Manager		10/3/2019

INSTRUCTIONS FOR FORM 7520-19

This form replaces forms 7520-12 and 7520-14. Use this form only when work is planned or has occurred that affects the well's construction or operation as an injection well, including work on the casing, tubing or packer (or for shallow Class V wells, the subsurface fluid emplacement network). Use one form per injection well. While reports or other information developed by contractors or service companies may be attached, this form must be signed by a responsible entity as described at 40 CFR 144.32. Note: operators closing Class V wells should use Form 7520-17.

NAME, ADDRESS, PHONE AND/OR EMAIL OF PERMITTEE: Enter the name and street address, city/town, state, and ZIP code of the permittee. Also provide an email address (if available) and/or a phone number.

PERMIT OR EPA ID NUMBER: Enter the well identification number or permit number assigned to the well by the EPA or the permitting authority.

API NUMBER: Enter the number assigned by the local jurisdiction (usually a State Oil and Gas Agency) using the American Petroleum Institute standard numbering system.

FULL WELL NAME: Enter the full name of the well or project.

Enter the **STATE** and **COUNTY** where the well is located. For States that do not have counties, use the name of that State's equivalent jurisdiction at a more local level.

WELL LOCATION: Fill in the complete township, range, and section to the nearest quarter-quarter section. A township is north or south of the baseline, and a range is east or west of the principal meridian (e.g., T12N, R34W). Also include the distance, in feet, from the nearest north or south line and nearest east or west line of the quarter-section. Also, enter the **latitude** and **longitude** of the well in decimal degrees, to five or six places if possible; be sure to include a negative sign for the longitude of a well in the Western Hemisphere and a negative sign for the latitude of a well in the Southern Hemisphere.

Enter the **WELL CLASS,** i.e., the class of injection well as defined in 40 CFR 144.6.

TIMING OF THE ACTION: Check ***Notice prior to work*** if the activity has not yet occurred (i.e., is planned). Check ***Report after work*** if the activity described has already occurred. As appropriate, include the date the activity is expected to start or the date the activity was completed. (Note this may not be available, e.g., for a plugging plan submitted with a permit application.)

TYPE OF ACTION: Check the appropriate box to describe the kind of activity being reported. Check ***Well Rework*** for work that was/will be performed on the well after it has already been in operation as an injection well. Check ***Plugging and Abandonment*** to report on plans for or descriptions of final closure/plugging after use as an injection well. Check ***Conversion to a Non-Injection Well*** if the well is to be converted to something other than an injection well.

Provide a **NARRATIVE DESCRIPTION** of the work planned to be performed, or that was performed. The narrative should include a description of the main procedures planned or that occurred during the work activity. A service company report, daily report, or similar document may be attached if it includes all the requested information and is clear and legible.

For well reworks, include the following information: The reason for the well rework; depths of activity; type of activity; changes to injection well configuration, well casing, or cement behind casing; any plug added to the well and its depth; any newly drilled interval and its depth; method(s) to demonstrate that the well has mechanical integrity (as applicable); and any deviations from the approved rework plan (as applicable).

For a well plugging plan, include the following information: Reason for the well plugging; number of plugs placed, and their depths; materials used as plugs (e.g., cast iron bridge plug, cement, cement retainer); method to set plugs; and wait-on-cement times, if any. Also provide one or more cost estimates from an independent firm in the business of plugging and abandoning wells to plug the well as described in the plan.

For well plugging affidavit, include the following information: Reason for the well plugging; number of plugs placed, and their depths; materials used as plugs (e.g., cast iron bridge plug, cement, cement retainer); method to set plugs; wait-on-cement times, if any; and any deviations from the approved plugging plan (if applicable).

For conversion to a non-injection well, include the following information: Depths of activity; type of activity; changes to injection well configuration, well casing, or cement behind casing; any plug added to the well and its depth; any newly drilled interval and its depth; depths of new perforations; and method(s) to demonstrate that the well has mechanical integrity (as applicable).

For all of the above activities, include a well sketch depicting the work, results of well tests/logging performed, service company tickets, and any other available information demonstrating how the work was/is to be performed. Also, specify whether depths are below ground surface, relative to Kelly bushing, etc.

CERTIFICATION: This form must be signed and dated by either: a responsible corporate officer for a corporation, by a general partner for a partnership, by the proprietor of a sole proprietorship, or by a principal executive or ranking elected official for a public agency.

PAPERWORK REDUCTION ACT NOTICE: The public reporting and recordkeeping burden for this collection of information is estimated to average between 6.0 and 7.9 hours per response, depending on the injection well class. Burden means the total time, effort, or financial resource expended by persons to generate, maintain, retain, or disclose or provide information to or for a Federal Agency. This includes the time needed to review instructions; develop, acquire, install, and utilize technology and systems for the purposes of collecting, validating, and verifying information, processing and maintaining information, and disclosing and providing information; adjust the existing ways to comply with any previously applicable instructions and requirements; train personnel to be able to respond to the collection of information; search data sources; complete and review the collection of information; and, transmit or otherwise disclose the information. An agency may not conduct or sponsor, and a person is not required to respond to, a collection of information unless it displays a currently valid OMB control number. Send comments on the Agency's need for this information, the accuracy of the provided burden estimates, and any suggested methods for minimizing respondent burden, including the use of automated collection techniques to Director, Collection Strategies Division, U.S. Environmental Protection Agency (2822), 1200 Pennsylvania Ave., NW., Washington, D.C. 20460. Include the OMB control number in any correspondence. Do not send the completed forms to this address.

AS-BUILT COREHOLE 5

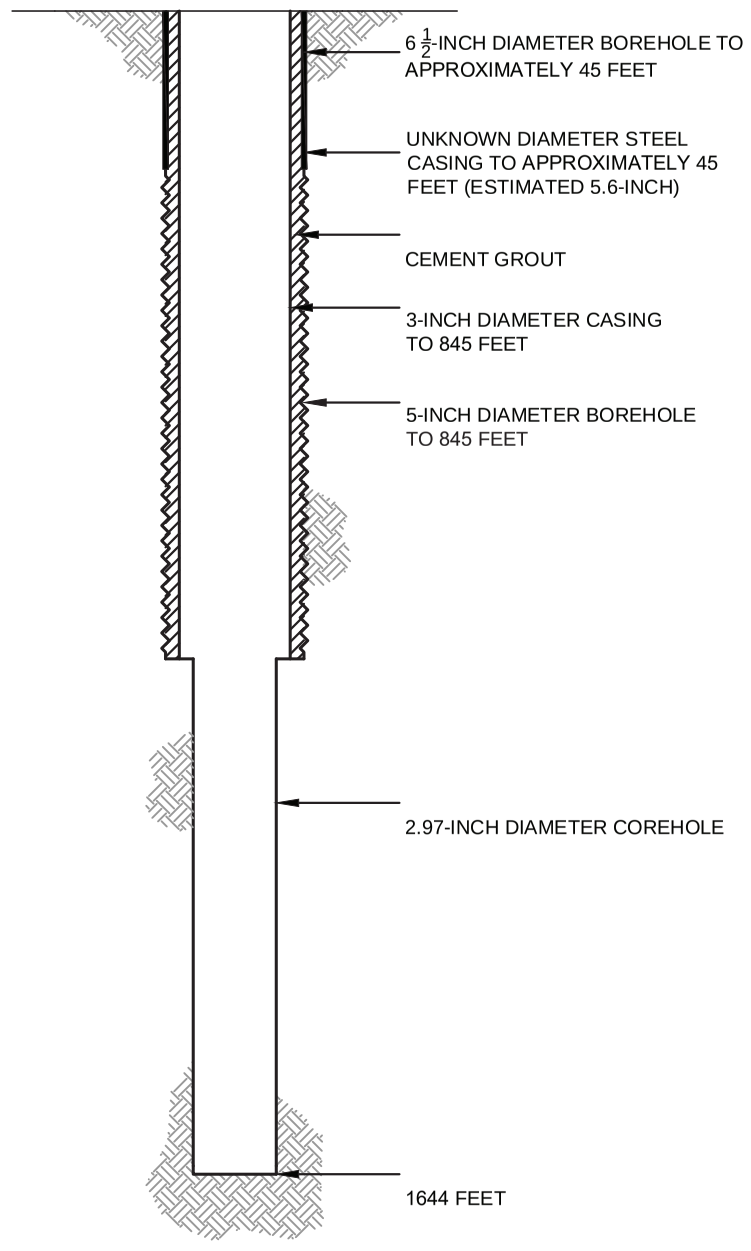

PROPOSED PLUGGING AND ABANDONMENT COREHOLE 5

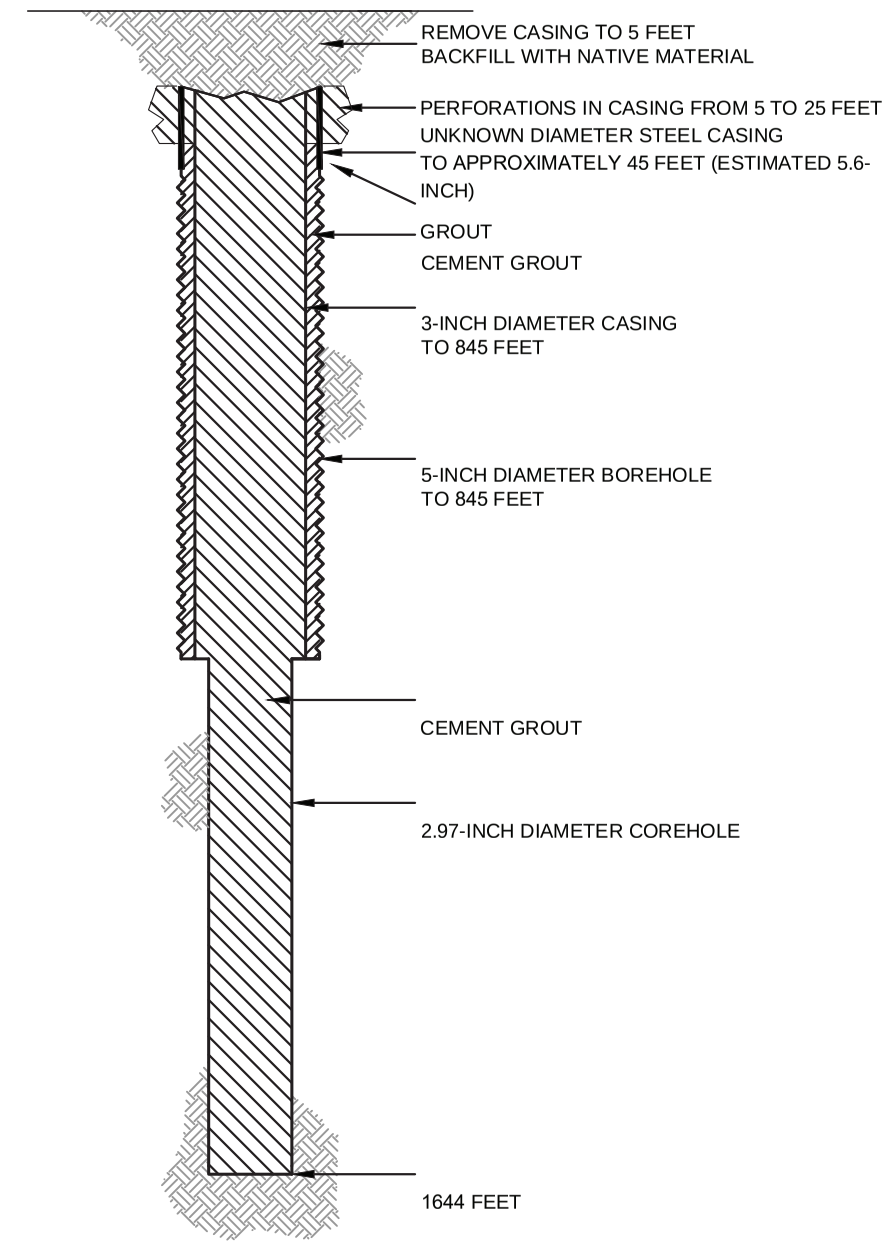

HALEY ALDRICH

FLORENCE COPPER, INC.
FLORENCE, ARIZONA

COREHOLE 5 DIAGRAM

FLORENCE COPPER INC.

NOT TO SCALE
SEPTEMBER 2019

FIGURE 1

MOBINI, GITA Printed: 4/21/2017 12:00 PM Layout: ABANDON (2)
G:\PROJECTS\CURIS RESOURCES\38706-CURIS FEASIBILITY\DRAWINGS\EPA\WELL ABANDON\415S_ABANDON.DWG

OMB No. 2040-0042 Approval Expires 4/30/2022

United States Environmental Protection Agency

WELL REWORK RECORD, PLUGGING AND ABANDONMENT PLAN, OR PLUGGING AND ABANDONMENT AFFIDAVIT

Name and Address, Phone Number and/or Email of Permittee

Florence Copper Project
1575 W Hunt Hwy,
Florence, AZ 85132

Permit or EPA ID Number	API Number	Full Well Name
R9UIC-AZ3-FY11-1		6S

State	County
Arizona	Pinal

Locate well in two directions from nearest lines of quarter section and drilling unit

Latitude 33.05066428

Longitude -111.4241108

Surface Location

NE **1/4 of** SE **1/4 of Section** 28 **Township** 4S **Range** 9E

_____ **ft. from (N/S)** _____ **Line of quarter section**

_____ **ft. from (E/W)** _____ **Line of quarter section.**

Well Class	Timing of Action (pick one)	Type of Action (pick one)
☐ Class I ☐ Class II ☑ Class III ☐ Class V	☑ Notice Prior to Work Date Expected to Commence March 2021 ☐ Report After Work Date Work Ended	☐ Well Rework ☑ Plugging and Abandonment ☐ Conversion to a Non-Injection Well

Provide a narrative description of the work planned to be performed, or that was performed. Use additional pages as necessary. See instructions.

A workover rig capable of performing the required abandonment operations at the required depths will be moved in and set up over the core hole. The core hole will be inspected to determine the depth to which the hole remains open and if any obstructions are present in the core hole; the presence and condition of any existing collar will also be documented. If necessary, the core hole will be cleaned out to a depth of at least 100 feet below the bedrock-LBFU contact to enable placement of cement seals.

If collar is present, an attempt will be made to remove it. If removal of the collar is not feasible, it will be left in the hole and perforated as needed to allow an annular seal to be placed to a depth of at least 25 feet bgs. In areas of agricultural use, the surface casing will be cut at least 5 feet bgs and removed.

If the collar cannot be removed, it will be perforated from at least 20 feet below the bedrock-LBFU contact to at least 20 feet above the contact; from at least 20 feet below the base of the MFGU to at least 20 feet above the top of the MFGU; and from at least 25 feet bgs to 5 feet bgs.

A tremie pipe will be used to place Type V cement in the open core hole from the bottom of the core hole to the top of the core hole. Cement retainers, as described above, will be used to force cement grout into the annulus and behind perforated intervals, as necessary.

If the hole has been obstructed, as much cement as possible will be placed from 100 feet below the LBFU-bedrock contact to the top of the core hole.

The volume of Type V cement will be recorded and will not be less than the estimated volume of material required to fill each interval. All cement grout will consist of Type V cement, or equivalent approved in accordance with the UIC Permit.

Certification

I certify under the penalty of law that I have personally examined and am familiar with the information submitted in this document and all attachments and that, based on my inquiry of those individuals immediately responsible for obtaining the information, I believe that the information is true, accurate, and complete. I am aware that there are significant penalties for submitting false information, including the possibliity of fine and imprisonment. (Ref. 40 CFR § 144.32)

Name and Official Title *(Please type or print)*	Signature	Date Signed
Dan Johnson, VP - General Manager		10/3/2019

INSTRUCTIONS FOR FORM 7520-19

This form replaces forms 7520-12 and 7520-14. Use this form only when work is planned or has occurred that affects the well's construction or operation as an injection well, including work on the casing, tubing or packer (or for shallow Class V wells, the subsurface fluid emplacement network). Use one form per injection well. While reports or other information developed by contractors or service companies may be attached, this form must be signed by a responsible entity as described at 40 CFR 144.32. Note: operators closing Class V wells should use Form 7520-17.

NAME, ADDRESS, PHONE AND/OR EMAIL OF PERMITTEE: Enter the name and street address, city/town, state, and ZIP code of the permittee. Also provide an email address (if available) and/or a phone number.

PERMIT OR EPA ID NUMBER: Enter the well identification number or permit number assigned to the well by the EPA or the permitting authority.

API NUMBER: Enter the number assigned by the local jurisdiction (usually a State Oil and Gas Agency) using the American Petroleum Institute standard numbering system.

FULL WELL NAME: Enter the full name of the well or project.

Enter the **STATE** and **COUNTY** where the well is located. For States that do not have counties, use the name of that State's equivalent jurisdiction at a more local level.

WELL LOCATION: Fill in the complete township, range, and section to the nearest quarter-quarter section. A township is north or south of the baseline, and a range is east or west of the principal meridian (e.g., T12N, R34W). Also include the distance, in feet, from the nearest north or south line and nearest east or west line of the quarter-section. Also, enter the **latitude** and **longitude** of the well in decimal degrees, to five or six places if possible; be sure to include a negative sign for the longitude of a well in the Western Hemisphere and a negative sign for the latitude of a well in the Southern Hemisphere.

Enter the **WELL CLASS,** i.e., the class of injection well as defined in 40 CFR 144.6.

TIMING OF THE ACTION: Check ***Notice prior to work*** if the activity has not yet occurred (i.e., is planned). Check ***Report after work*** if the activity described has already occurred. As appropriate, include the date the activity is expected to start or the date the activity was completed. (Note this may not be available, e.g., for a plugging plan submitted with a permit application.)

TYPE OF ACTION: Check the appropriate box to describe the kind of activity being reported. Check ***Well Rework*** for work that was/will be performed on the well after it has already been in operation as an injection well. Check ***Plugging and Abandonment*** to report on plans for or descriptions of final closure/plugging after use as an injection well. Check ***Conversion to a Non-Injection Well*** if the well is to be converted to something other than an injection well.

Provide a **NARRATIVE DESCRIPTION** of the work planned to be performed, or that was performed. The narrative should include a description of the main procedures planned or that occurred during the work activity. A service company report, daily report, or similar document may be attached if it includes all the requested information and is clear and legible.

For well reworks, include the following information: The reason for the well rework; depths of activity; type of activity; changes to injection well configuration, well casing, or cement behind casing; any plug added to the well and its depth; any newly drilled interval and its depth; method(s) to demonstrate that the well has mechanical integrity (as applicable); and any deviations from the approved rework plan (as applicable).

For a well plugging plan, include the following information: Reason for the well plugging; number of plugs placed, and their depths; materials used as plugs (e.g., cast iron bridge plug, cement, cement retainer); method to set plugs; and wait-on-cement times, if any. Also provide one or more cost estimates from an independent firm in the business of plugging and abandoning wells to plug the well as described in the plan.

For well plugging affidavit, include the following information: Reason for the well plugging; number of plugs placed, and their depths; materials used as plugs (e.g., cast iron bridge plug, cement, cement retainer); method to set plugs; wait-on-cement times, if any; and any deviations from the approved plugging plan (if applicable).

For conversion to a non-injection well, include the following information: Depths of activity; type of activity; changes to injection well configuration, well casing, or cement behind casing; any plug added to the well and its depth; any newly drilled interval and its depth; depths of new perforations; and method(s) to demonstrate that the well has mechanical integrity (as applicable).

For all of the above activities, include a well sketch depicting the work, results of well tests/logging performed, service company tickets, and any other available information demonstrating how the work was/is to be performed. Also, specify whether depths are below ground surface, relative to Kelly bushing, etc.

CERTIFICATION: This form must be signed and dated by either: a responsible corporate officer for a corporation, by a general partner for a partnership, by the proprietor of a sole proprietorship, or by a principal executive or ranking elected official for a public agency.

PAPERWORK REDUCTION ACT NOTICE: The public reporting and recordkeeping burden for this collection of information is estimated to average between 6.0 and 7.9 hours per response, depending on the injection well class. Burden means the total time, effort, or financial resource expended by persons to generate, maintain, retain, or disclose or provide information to or for a Federal Agency. This includes the time needed to review instructions; develop, acquire, install, and utilize technology and systems for the purposes of collecting, validating, and verifying information, processing and maintaining information, and disclosing and providing information; adjust the existing ways to comply with any previously applicable instructions and requirements; train personnel to be able to respond to the collection of information; search data sources; complete and review the collection of information; and, transmit or otherwise disclose the information. An agency may not conduct or sponsor, and a person is not required to respond to, a collection of information unless it displays a currently valid OMB control number. Send comments on the Agency's need for this information, the accuracy of the provided burden estimates, and any suggested methods for minimizing respondent burden, including the use of automated collection techniques to Director, Collection Strategies Division, U.S. Environmental Protection Agency (2822), 1200 Pennsylvania Ave., NW., Washington, D.C. 20460. Include the OMB control number in any correspondence. Do not send the completed forms to this address.

AS-BUILT COREHOLE 6S

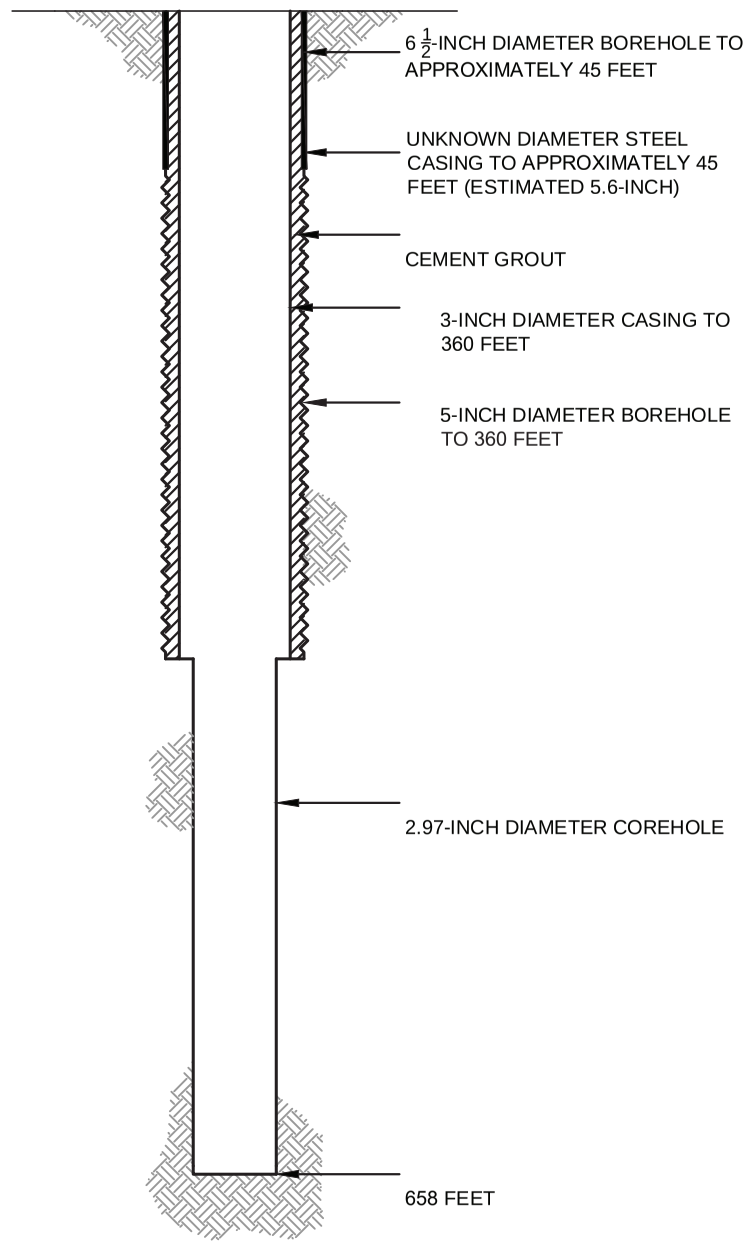

PROPOSED PLUGGING AND ABANDONMENT COREHOLE 6S

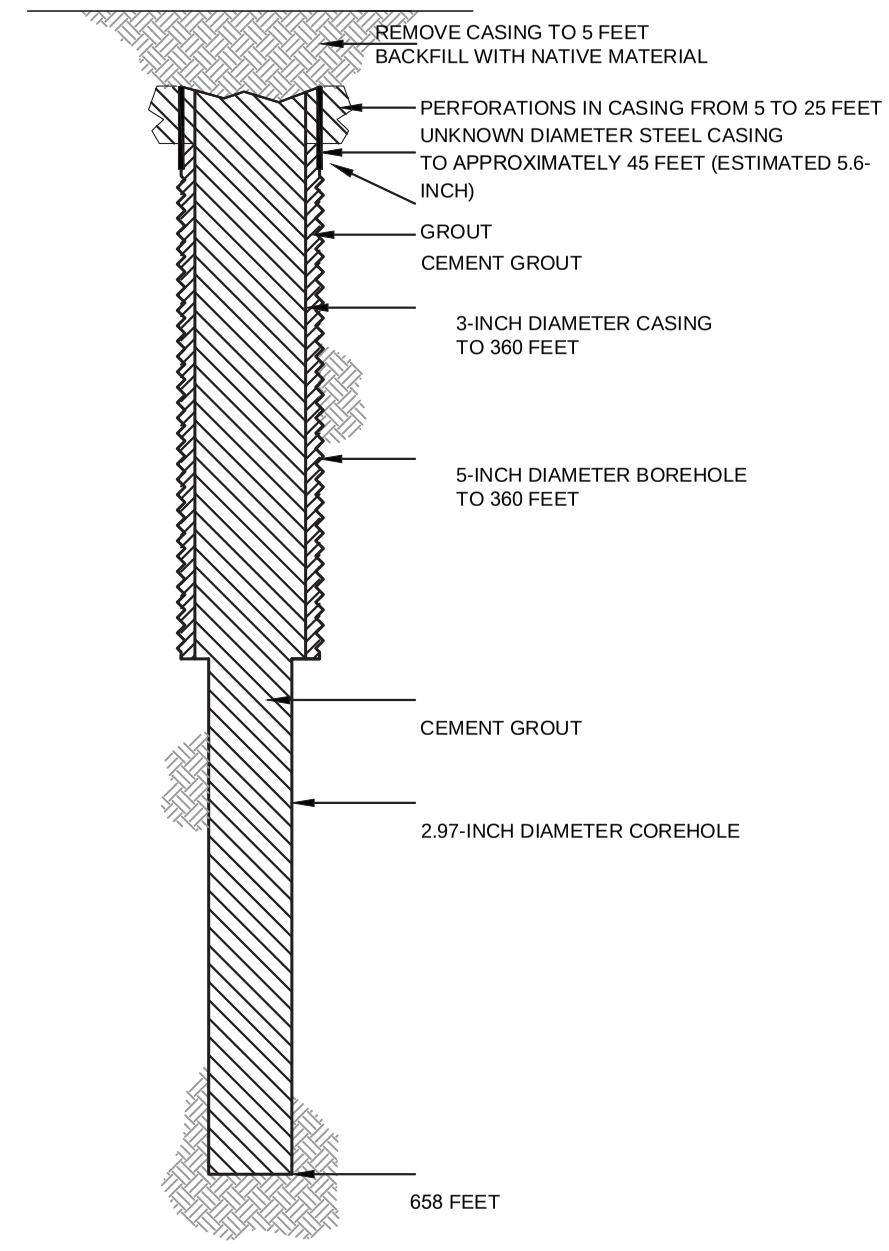

HALEY ALDRICH

FLORENCE COPPER, INC.
FLORENCE, ARIZONA

COREHOLE 6S DIAGRAM

FLORENCE COPPER INC.

NOT TO SCALE
SEPTEMBER 2019

FIGURE 1

MOBINI, GITA Printed: 4/21/2017 12:00 PM Layout: ABANDON (2)
\PROJECTS\CURIS RESOURCES38706-CURIS FEASIBILITY\DRAWINGS\EPA\WELL ABANDON\415S_ABANDON.DWG

OMB No. 2040-0042 Approval Expires 4/30/2022

United States Environmental Protection Agency

WELL REWORK RECORD, PLUGGING AND ABANDONMENT PLAN, OR PLUGGING AND ABANDONMENT AFFIDAVIT

Name and Address, Phone Number and/or Email of Permittee

Florence Copper Project
1575 W Hunt Hwy,
Florence, AZ 85132

Permit or EPA ID Number	API Number	Full Well Name
R9UIC-AZ3-FY11-1		11PB

State	County
Arizona	Pinal

Locate well in two directions from nearest lines of quarter section and drilling unit

Surface Location

SW 1/4 of SE 1/4 of Section 28 Township 4S Range 9E

Latitude 33.04830195

Longitude -111.4260899

ft. from (N/S) Line of quarter section

ft. from (E/W) Line of quarter section.

Well Class	Timing of Action (pick one)	Type of Action (pick one)
☐ Class I ☐ Class II ☑ Class III ☐ Class V	☑ Notice Prior to Work Date Expected to Commence March 2021 ☐ Report After Work Date Work Ended	☐ Well Rework ☑ Plugging and Abandonment ☐ Conversion to a Non-Injection Well

Provide a narrative description of the work planned to be performed, or that was performed. Use additional pages as necessary. See instructions.

A workover rig capable of performing the required abandonment operations at the required depths will be moved in and set up over the core hole. The core hole will be inspected to determine the depth to which the hole remains open and if any obstructions are present in the core hole; the presence and condition of any existing collar will also be documented. If necessary, the core hole will be cleaned out to a depth of at least 100 feet below the bedrock-LBFU contact to enable placement of cement seals.

If collar is present, an attempt will be made to remove it. If removal of the collar is not feasible, it will be left in the hole and perforated as needed to allow an annular seal to be placed to a depth of at least 25 feet bgs. In areas of agricultural use, the surface casing will be cut at least 5 feet bgs and removed.

If the collar cannot be removed, it will be perforated from at least 20 feet below the bedrock-LBFU contact to at least 20 feet above the contact; from at least 20 feet below the base of the MFGU to at least 20 feet above the top of the MFGU; and from at least 25 feet bgs to 5 feet bgs.

A tremie pipe will be used to place Type V cement in the open core hole from the bottom of the core hole to the top of the core hole. Cement retainers, as described above, will be used to force cement grout into the annulus and behind perforated intervals, as necessary.

If the hole has been obstructed, as much cement as possible will be placed from 100 feet below the LBFU-bedrock contact to the top of the core hole.

The volume of Type V cement will be recorded and will not be less than the estimated volume of material required to fill each interval. All cement grout will consist of Type V cement, or equivalent approved in accordance with the UIC Permit.

Certification

I certify under the penalty of law that I have personally examined and am familiar with the information submitted in this document and all attachments and that, based on my inquiry of those individuals immediately responsible for obtaining the information, I believe that the information is true, accurate, and complete. I am aware that there are significant penalties for submitting false information, including the possibliity of fine and imprisonment. (Ref. 40 CFR § 144.32)

Name and Official Title *(Please type or print)*	Signature	Date Signed
Dan Johnson, VP - General Manager		10/3/2019

INSTRUCTIONS FOR FORM 7520-19

This form replaces forms 7520-12 and 7520-14. Use this form only when work is planned or has occurred that affects the well's construction or operation as an injection well, including work on the casing, tubing or packer (or for shallow Class V wells, the subsurface fluid emplacement network). Use one form per injection well. While reports or other information developed by contractors or service companies may be attached, this form must be signed by a responsible entity as described at 40 CFR 144.32. Note: operators closing Class V wells should use Form 7520-17.

NAME, ADDRESS, PHONE AND/OR EMAIL OF PERMITTEE: Enter the name and street address, city/town, state, and ZIP code of the permittee. Also provide an email address (if available) and/or a phone number.

PERMIT OR EPA ID NUMBER: Enter the well identification number or permit number assigned to the well by the EPA or the permitting authority.

API NUMBER: Enter the number assigned by the local jurisdiction (usually a State Oil and Gas Agency) using the American Petroleum Institute standard numbering system.

FULL WELL NAME: Enter the full name of the well or project.

Enter the **STATE** and **COUNTY** where the well is located. For States that do not have counties, use the name of that State's equivalent jurisdiction at a more local level.

WELL LOCATION: Fill in the complete township, range, and section to the nearest quarter-quarter section. A township is north or south of the baseline, and a range is east or west of the principal meridian (e.g., T12N, R34W). Also include the distance, in feet, from the nearest north or south line and nearest east or west line of the quarter-section. Also, enter the **latitude** and **longitude** of the well in decimal degrees, to five or six places if possible; be sure to include a negative sign for the longitude of a well in the Western Hemisphere and a negative sign for the latitude of a well in the Southern Hemisphere.

Enter the **WELL CLASS,** i.e., the class of injection well as defined in 40 CFR 144.6.

TIMING OF THE ACTION: Check ***Notice prior to work*** if the activity has not yet occurred (i.e., is planned). Check ***Report after work*** if the activity described has already occurred. As appropriate, include the date the activity is expected to start or the date the activity was completed. (Note this may not be available, e.g., for a plugging plan submitted with a permit application.)

TYPE OF ACTION: Check the appropriate box to describe the kind of activity being reported. Check ***Well Rework*** for work that was/will be performed on the well after it has already been in operation as an injection well. Check ***Plugging and Abandonment*** to report on plans for or descriptions of final closure/plugging after use as an injection well. Check ***Conversion to a Non-Injection Well*** if the well is to be converted to something other than an injection well.

Provide a **NARRATIVE DESCRIPTION** of the work planned to be performed, or that was performed. The narrative should include a description of the main procedures planned or that occurred during the work activity. A service company report, daily report, or similar document may be attached if it includes all the requested information and is clear and legible.

For well reworks, include the following information: The reason for the well rework; depths of activity; type of activity; changes to injection well configuration, well casing, or cement behind casing; any plug added to the well and its depth; any newly drilled interval and its depth; method(s) to demonstrate that the well has mechanical integrity (as applicable); and any deviations from the approved rework plan (as applicable).

For a well plugging plan, include the following information: Reason for the well plugging; number of plugs placed, and their depths; materials used as plugs (e.g., cast iron bridge plug, cement, cement retainer); method to set plugs; and wait-on-cement times, if any. Also provide one or more cost estimates from an independent firm in the business of plugging and abandoning wells to plug the well as described in the plan.

For well plugging affidavit, include the following information: Reason for the well plugging; number of plugs placed, and their depths; materials used as plugs (e.g., cast iron bridge plug, cement, cement retainer); method to set plugs; wait-on-cement times, if any; and any deviations from the approved plugging plan (if applicable).

For conversion to a non-injection well, include the following information: Depths of activity; type of activity; changes to injection well configuration, well casing, or cement behind casing; any plug added to the well and its depth; any newly drilled interval and its depth; depths of new perforations; and method(s) to demonstrate that the well has mechanical integrity (as applicable).

For all of the above activities, include a well sketch depicting the work, results of well tests/logging performed, service company tickets, and any other available information demonstrating how the work was/is to be performed. Also, specify whether depths are below ground surface, relative to Kelly bushing, etc.

CERTIFICATION: This form must be signed and dated by either: a responsible corporate officer for a corporation, by a general partner for a partnership, by the proprietor of a sole proprietorship, or by a principal executive or ranking elected official for a public agency.

PAPERWORK REDUCTION ACT NOTICE: The public reporting and recordkeeping burden for this collection of information is estimated to average between 6.0 and 7.9 hours per response, depending on the injection well class. Burden means the total time, effort, or financial resource expended by persons to generate, maintain, retain, or disclose or provide information to or for a Federal Agency. This includes the time needed to review instructions; develop, acquire, install, and utilize technology and systems for the purposes of collecting, validating, and verifying information, processing and maintaining information, and disclosing and providing information; adjust the existing ways to comply with any previously applicable instructions and requirements; train personnel to be able to respond to the collection of information; search data sources; complete and review the collection of information; and, transmit or otherwise disclose the information. An agency may not conduct or sponsor, and a person is not required to respond to, a collection of information unless it displays a currently valid OMB control number. Send comments on the Agency's need for this information, the accuracy of the provided burden estimates, and any suggested methods for minimizing respondent burden, including the use of automated collection techniques to Director, Collection Strategies Division, U.S. Environmental Protection Agency (2822), 1200 Pennsylvania Ave., NW., Washington, D.C. 20460. Include the OMB control number in any correspondence. Do not send the completed forms to this address.

AS-BUILT COREHOLE 11PB

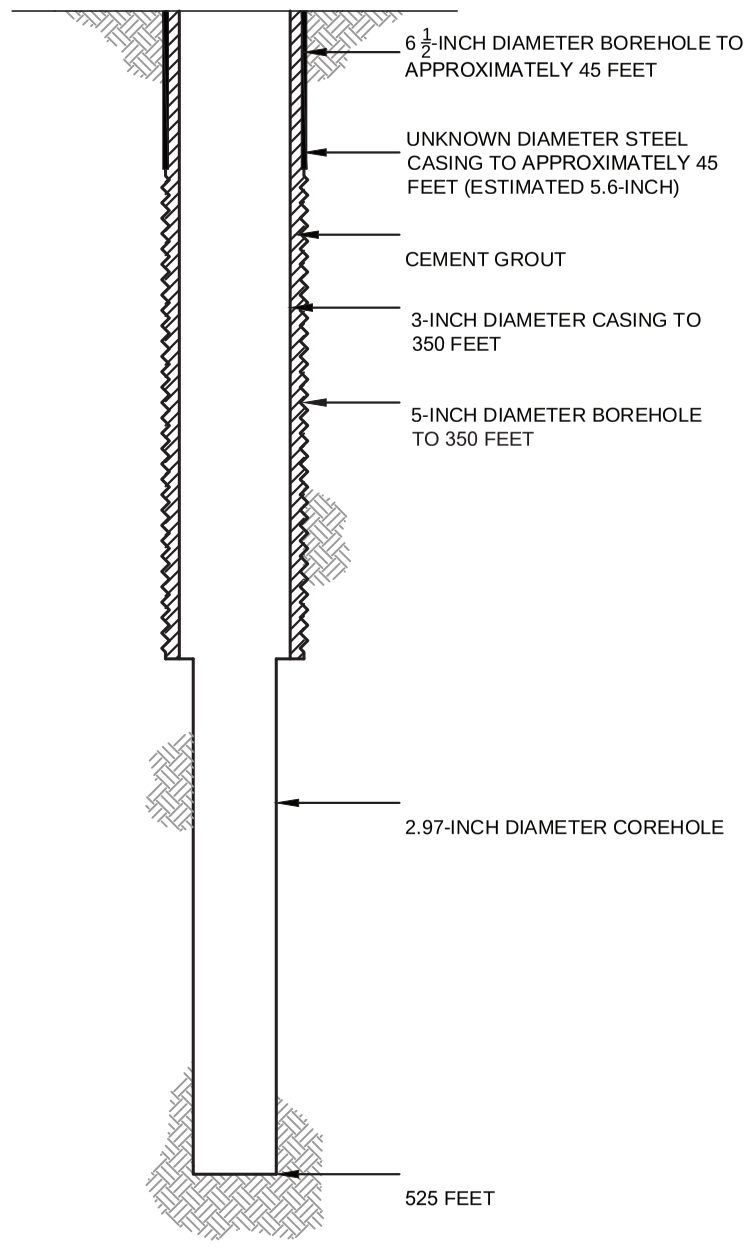

PROPOSED PLUGGING AND ABANDONMENT COREHOLE 11PB

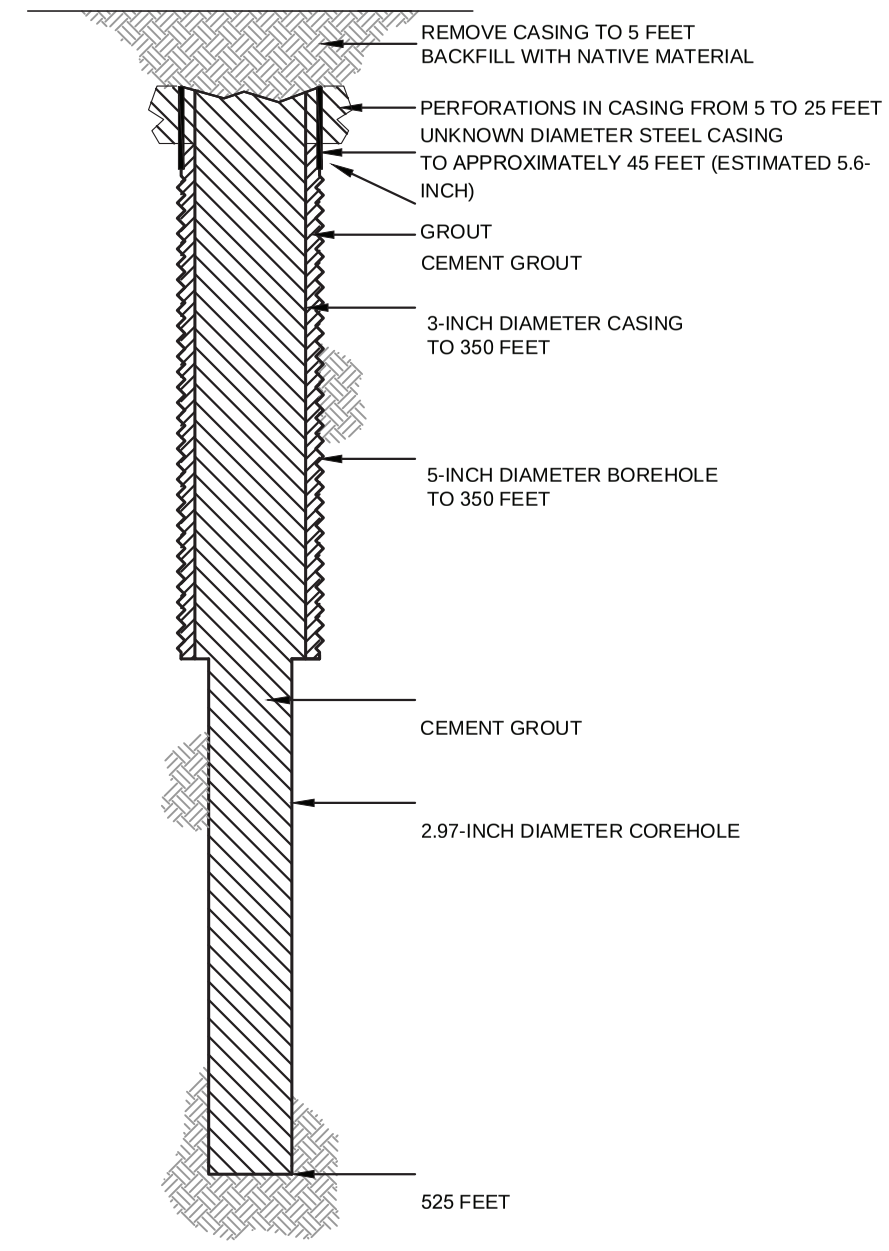

HALEY ALDRICH

FLORENCE COPPER, INC.
FLORENCE, ARIZONA

COREHOLE 11PB DIAGRAM

FLORENCE COPPER INC.

NOT TO SCALE
SEPTEMBER 2019

FIGURE 1

MOBINI, GITA Printed: 4/21/2017 12:00 PM Layout: ABANDON (2)
G:\PROJECTS\CURIS RESOURCES\38706-CURIS FEASIBILITY\DRAWINGS\EPA\WELL ABANDON\415S_ABANDON.DWG

OMB No. 2040-0042 Approval Expires 4/30/2022

United States Environmental Protection Agency

WELL REWORK RECORD, PLUGGING AND ABANDONMENT PLAN, OR PLUGGING AND ABANDONMENT AFFIDAVIT

Name and Address, Phone Number and/or Email of Permittee

Florence Copper Project
1575 W Hunt Hwy,
Florence, AZ 85132

Permit or EPA ID Number	API Number	Full Well Name
R9UIC-AZ3-FY11-1		18S

State	County
Arizona	Pinal

Locate well in two directions from nearest lines of quarter section and drilling unit

Latitude 33.04975397

Longitude -111.4305647

Surface Location

NE **1/4 of** SW **1/4 of Section** 28 **Township** 4S **Range** 9E

_____ **ft. from (N/S)** _____ **Line of quarter section**

_____ **ft. from (E/W)** _____ **Line of quarter section.**

Well Class	Timing of Action (pick one)	Type of Action (pick one)
☐ Class I ☐ Class II ☑ Class III ☐ Class V	☑ Notice Prior to Work Date Expected to Commence March 2021 ☐ Report After Work Date Work Ended	☐ Well Rework ☑ Plugging and Abandonment ☐ Conversion to a Non-Injection Well

Provide a narrative description of the work planned to be performed, or that was performed. Use additional pages as necessary. See instructions.

A workover rig capable of performing the required abandonment operations at the required depths will be moved in and set up over the core hole. The core hole will be inspected to determine the depth to which the hole remains open and if any obstructions are present in the core hole; the presence and condition of any existing collar will also be documented. If necessary, the core hole will be cleaned out to a depth of at least 100 feet below the bedrock-LBFU contact to enable placement of cement seals.

If collar is present, an attempt will be made to remove it. If removal of the collar is not feasible, it will be left in the hole and perforated as needed to allow an annular seal to be placed to a depth of at least 25 feet bgs. In areas of agricultural use, the surface casing will be cut at least 5 feet bgs and removed.

If the collar cannot be removed, it will be perforated from at least 20 feet below the bedrock-LBFU contact to at least 20 feet above the contact; from at least 20 feet below the base of the MFGU to at least 20 feet above the top of the MFGU; and from at least 25 feet bgs to 5 feet bgs.

A tremie pipe will be used to place Type V cement in the open core hole from the bottom of the core hole to the top of the core hole. Cement retainers, as described above, will be used to force cement grout into the annulus and behind perforated intervals, as necessary.

If the hole has been obstructed, as much cement as possible will be placed from 100 feet below the LBFU-bedrock contact to the top of the core hole.

The volume of Type V cement will be recorded and will not be less than the estimated volume of material required to fill each interval. All cement grout will consist of Type V cement, or equivalent approved in accordance with the UIC Permit.

Certification

I certify under the penalty of law that I have personally examined and am familiar with the information submitted in this document and all attachments and that, based on my inquiry of those individuals immediately responsible for obtaining the information, I believe that the information is true, accurate, and complete. I am aware that there are significant penalties for submitting false information, including the possibliity of fine and imprisonment. (Ref. 40 CFR § 144.32)

Name and Official Title *(Please type or print)*	Signature	Date Signed
Dan Johnson, VP - General Manager		10/3/2019

INSTRUCTIONS FOR FORM 7520-19

This form replaces forms 7520-12 and 7520-14. Use this form only when work is planned or has occurred that affects the well's construction or operation as an injection well, including work on the casing, tubing or packer (or for shallow Class V wells, the subsurface fluid emplacement network). Use one form per injection well. While reports or other information developed by contractors or service companies may be attached, this form must be signed by a responsible entity as described at 40 CFR 144.32. Note: operators closing Class V wells should use Form 7520-17.

NAME, ADDRESS, PHONE AND/OR EMAIL OF PERMITTEE: Enter the name and street address, city/town, state, and ZIP code of the permittee. Also provide an email address (if available) and/or a phone number.

PERMIT OR EPA ID NUMBER: Enter the well identification number or permit number assigned to the well by the EPA or the permitting authority.

API NUMBER: Enter the number assigned by the local jurisdiction (usually a State Oil and Gas Agency) using the American Petroleum Institute standard numbering system.

FULL WELL NAME: Enter the full name of the well or project.

Enter the **STATE** and **COUNTY** where the well is located. For States that do not have counties, use the name of that State's equivalent jurisdiction at a more local level.

WELL LOCATION: Fill in the complete township, range, and section to the nearest quarter-quarter section. A township is north or south of the baseline, and a range is east or west of the principal meridian (e.g., T12N, R34W). Also include the distance, in feet, from the nearest north or south line and nearest east or west line of the quarter-section. Also, enter the **latitude** and **longitude** of the well in decimal degrees, to five or six places if possible; be sure to include a negative sign for the longitude of a well in the Western Hemisphere and a negative sign for the latitude of a well in the Southern Hemisphere.

Enter the **WELL CLASS,** i.e., the class of injection well as defined in 40 CFR 144.6.

TIMING OF THE ACTION: Check ***Notice prior to work*** if the activity has not yet occurred (i.e., is planned). Check ***Report after work*** if the activity described has already occurred. As appropriate, include the date the activity is expected to start or the date the activity was completed. (Note this may not be available, e.g., for a plugging plan submitted with a permit application.)

TYPE OF ACTION: Check the appropriate box to describe the kind of activity being reported. Check ***Well Rework*** for work that was/will be performed on the well after it has already been in operation as an injection well. Check ***Plugging and Abandonment*** to report on plans for or descriptions of final closure/plugging after use as an injection well. Check ***Conversion to a Non-Injection Well*** if the well is to be converted to something other than an injection well.

Provide a **NARRATIVE DESCRIPTION** of the work planned to be performed, or that was performed. The narrative should include a description of the main procedures planned or that occurred during the work activity. A service company report, daily report, or similar document may be attached if it includes all the requested information and is clear and legible.

For well reworks, include the following information: The reason for the well rework; depths of activity; type of activity; changes to injection well configuration, well casing, or cement behind casing; any plug added to the well and its depth; any newly drilled interval and its depth; method(s) to demonstrate that the well has mechanical integrity (as applicable); and any deviations from the approved rework plan (as applicable).

For a well plugging plan, include the following information: Reason for the well plugging; number of plugs placed, and their depths; materials used as plugs (e.g., cast iron bridge plug, cement, cement retainer); method to set plugs; and wait-on-cement times, if any. Also provide one or more cost estimates from an independent firm in the business of plugging and abandoning wells to plug the well as described in the plan.

For well plugging affidavit, include the following information: Reason for the well plugging; number of plugs placed, and their depths; materials used as plugs (e.g., cast iron bridge plug, cement, cement retainer); method to set plugs; wait-on-cement times, if any; and any deviations from the approved plugging plan (if applicable).

For conversion to a non-injection well, include the following information: Depths of activity; type of activity; changes to injection well configuration, well casing, or cement behind casing; any plug added to the well and its depth; any newly drilled interval and its depth; depths of new perforations; and method(s) to demonstrate that the well has mechanical integrity (as applicable).

For all of the above activities, include a well sketch depicting the work, results of well tests/logging performed, service company tickets, and any other available information demonstrating how the work was/is to be performed. Also, specify whether depths are below ground surface, relative to Kelly bushing, etc.

CERTIFICATION: This form must be signed and dated by either: a responsible corporate officer for a corporation, by a general partner for a partnership, by the proprietor of a sole proprietorship, or by a principal executive or ranking elected official for a public agency.

PAPERWORK REDUCTION ACT NOTICE: The public reporting and recordkeeping burden for this collection of information is estimated to average between 6.0 and 7.9 hours per response, depending on the injection well class. Burden means the total time, effort, or financial resource expended by persons to generate, maintain, retain, or disclose or provide information to or for a Federal Agency. This includes the time needed to review instructions; develop, acquire, install, and utilize technology and systems for the purposes of collecting, validating, and verifying information, processing and maintaining information, and disclosing and providing information; adjust the existing ways to comply with any previously applicable instructions and requirements; train personnel to be able to respond to the collection of information; search data sources; complete and review the collection of information; and, transmit or otherwise disclose the information. An agency may not conduct or sponsor, and a person is not required to respond to, a collection of information unless it displays a currently valid OMB control number. Send comments on the Agency's need for this information, the accuracy of the provided burden estimates, and any suggested methods for minimizing respondent burden, including the use of automated collection techniques to Director, Collection Strategies Division, U.S. Environmental Protection Agency (2822), 1200 Pennsylvania Ave., NW., Washington, D.C. 20460. Include the OMB control number in any correspondence. Do not send the completed forms to this address.

AS-BUILT COREHOLE 18S

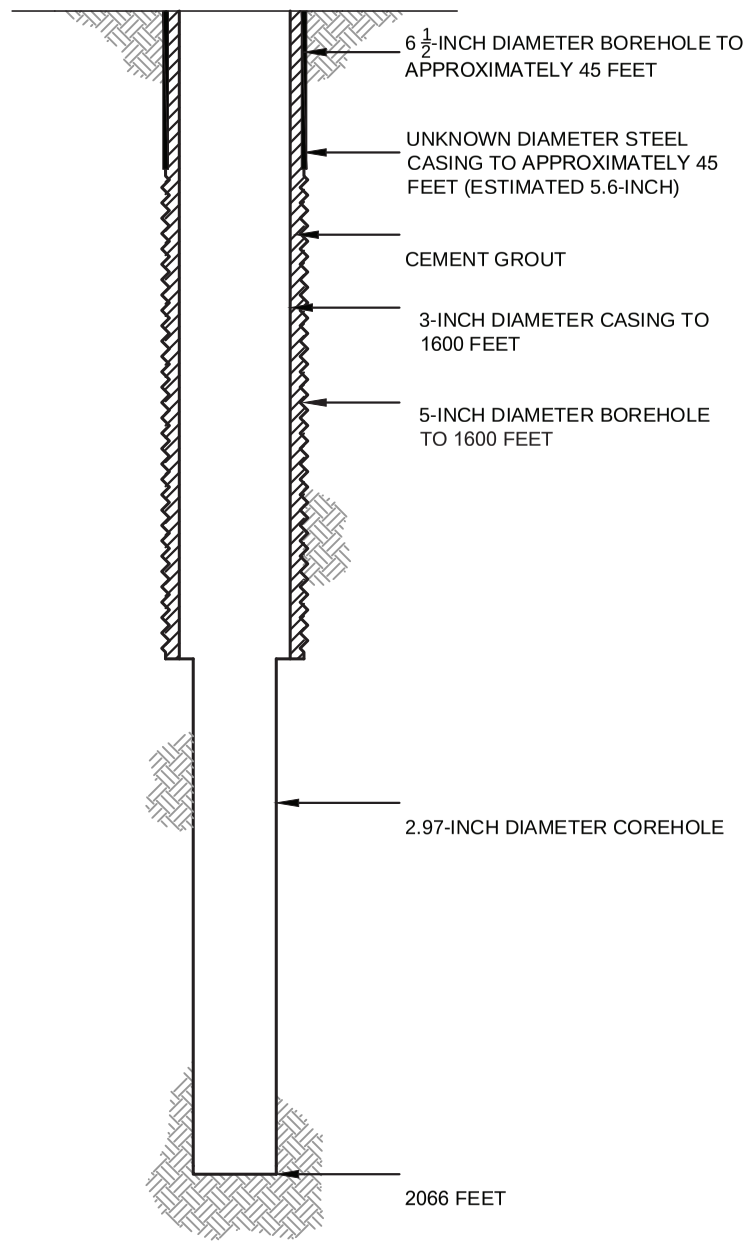

PROPOSED PLUGGING AND ABANDONMENT COREHOLE 18S

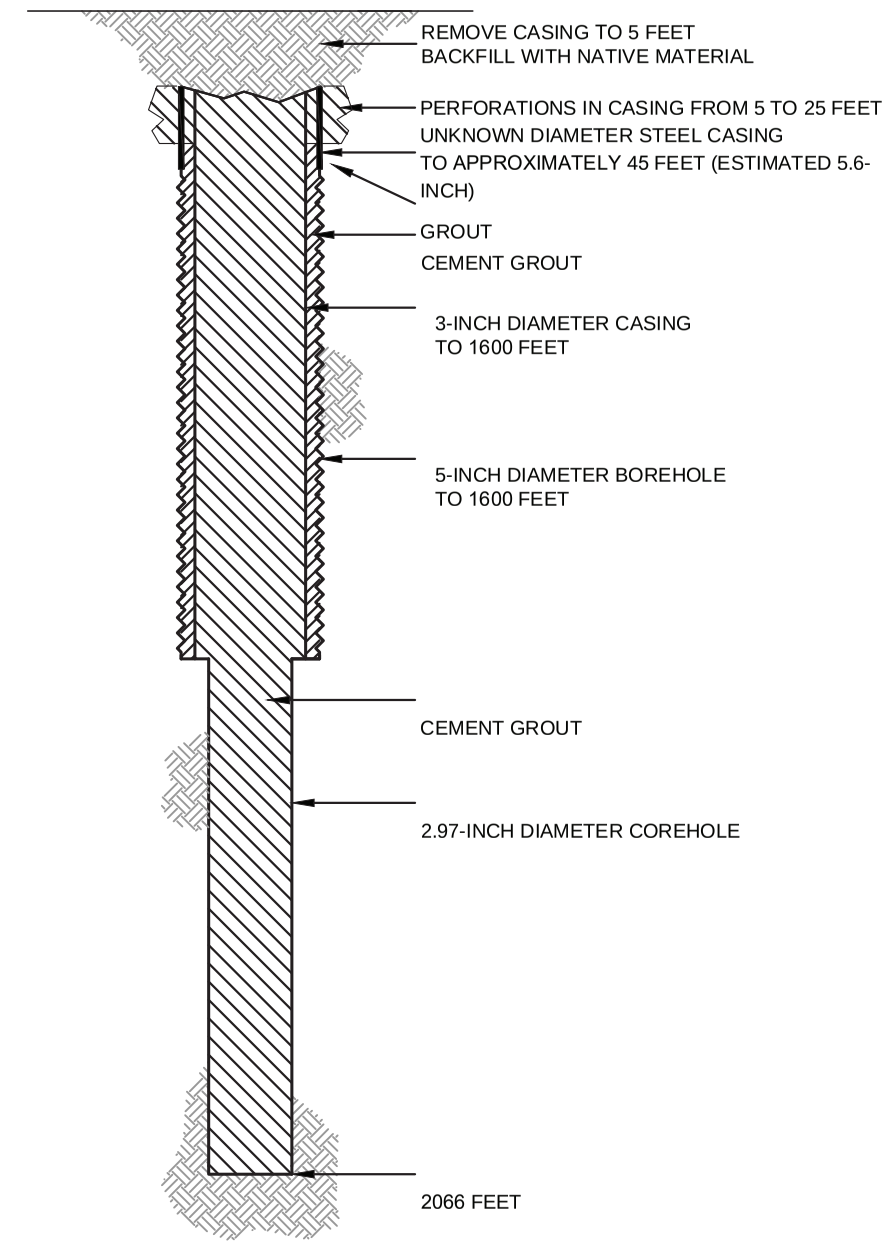

HALEY ALDRICH

FLORENCE COPPER, INC.
FLORENCE, ARIZONA

COREHOLE 18S DIAGRAM

FLORENCE COPPER INC.

NOT TO SCALE
SEPTEMBER 2019

FIGURE 1

MOBINI, GITA Printed: 4/21/2017 12:00 PM Layout: ABANDON (2)
G:\PROJECTS\CURIS RESOURCES\38706-CURIS FEASIBILITY\DRAWINGS\EPA\WELL ABANDON\415S_ABANDON.DWG

OMB No. 2040-0042 Approval Expires 4/30/2022

United States Environmental Protection Agency

WELL REWORK RECORD, PLUGGING AND ABANDONMENT PLAN, OR PLUGGING AND ABANDONMENT AFFIDAVIT

Name and Address, Phone Number and/or Email of Permittee

Florence Copper Project
1575 W Hunt Hwy,
Florence, AZ 85132

Permit or EPA ID Number	API Number	Full Well Name
R9UIC-AZ3-FY11-1		32MF

State	County
Arizona	Pinal

Locate well in two directions from nearest lines of quarter section and drilling unit

Surface Location

NE 1/4 of NW 1/4 of Section 33 Township 4S Range 9E

Latitude 33.0455677

Longitude -111.430389

ft. from (N/S) Line of quarter section

ft. from (E/W) Line of quarter section.

Well Class	Timing of Action (pick one)	Type of Action (pick one)
☐ Class I ☐ Class II ☑ Class III ☐ Class V	☑ Notice Prior to Work Date Expected to Commence March 2021 ☐ Report After Work Date Work Ended	☐ Well Rework ☑ Plugging and Abandonment ☐ Conversion to a Non-Injection Well

Provide a narrative description of the work planned to be performed, or that was performed. Use additional pages as necessary. See instructions.

A workover rig capable of performing the required abandonment operations at the required depths will be moved in and set up over the core hole. The core hole will be inspected to determine the depth to which the hole remains open and if any obstructions are present in the core hole; the presence and condition of any existing collar will also be documented. If necessary, the core hole will be cleaned out to a depth of at least 100 feet below the bedrock-LBFU contact to enable placement of cement seals.

If collar is present, an attempt will be made to remove it. If removal of the collar is not feasible, it will be left in the hole and perforated as needed to allow an annular seal to be placed to a depth of at least 25 feet bgs. In areas of agricultural use, the surface casing will be cut at least 5 feet bgs and removed.

If the collar cannot be removed, it will be perforated from at least 20 feet below the bedrock-LBFU contact to at least 20 feet above the contact; from at least 20 feet below the base of the MFGU to at least 20 feet above the top of the MFGU; and from at least 25 feet bgs to 5 feet bgs.

A tremie pipe will be used to place Type V cement in the open core hole from the bottom of the core hole to the top of the core hole. Cement retainers, as described above, will be used to force cement grout into the annulus and behind perforated intervals, as necessary.

If the hole has been obstructed, as much cement as possible will be placed from 100 feet below the LBFU-bedrock contact to the top of the core hole.

The volume of Type V cement will be recorded and will not be less than the estimated volume of material required to fill each interval. All cement grout will consist of Type V cement, or equivalent approved in accordance with the UIC Permit.

Certification

I certify under the penalty of law that I have personally examined and am familiar with the information submitted in this document and all attachments and that, based on my inquiry of those individuals immediately responsible for obtaining the information, I believe that the information is true, accurate, and complete. I am aware that there are significant penalties for submitting false information, including the possibliity of fine and imprisonment. (Ref. 40 CFR § 144.32)

Name and Official Title *(Please type or print)*	Signature	Date Signed
Dan Johnson, VP - General Manager		10/3/2019

INSTRUCTIONS FOR FORM 7520-19

This form replaces forms 7520-12 and 7520-14. Use this form only when work is planned or has occurred that affects the well's construction or operation as an injection well, including work on the casing, tubing or packer (or for shallow Class V wells, the subsurface fluid emplacement network). Use one form per injection well. While reports or other information developed by contractors or service companies may be attached, this form must be signed by a responsible entity as described at 40 CFR 144.32. Note: operators closing Class V wells should use Form 7520-17.

NAME, ADDRESS, PHONE AND/OR EMAIL OF PERMITTEE: Enter the name and street address, city/town, state, and ZIP code of the permittee. Also provide an email address (if available) and/or a phone number.

PERMIT OR EPA ID NUMBER: Enter the well identification number or permit number assigned to the well by the EPA or the permitting authority.

API NUMBER: Enter the number assigned by the local jurisdiction (usually a State Oil and Gas Agency) using the American Petroleum Institute standard numbering system.

FULL WELL NAME: Enter the full name of the well or project.

Enter the **STATE** and **COUNTY** where the well is located. For States that do not have counties, use the name of that State's equivalent jurisdiction at a more local level.

WELL LOCATION: Fill in the complete township, range, and section to the nearest quarter-quarter section. A township is north or south of the baseline, and a range is east or west of the principal meridian (e.g., T12N, R34W). Also include the distance, in feet, from the nearest north or south line and nearest east or west line of the quarter-section. Also, enter the **latitude** and **longitude** of the well in decimal degrees, to five or six places if possible; be sure to include a negative sign for the longitude of a well in the Western Hemisphere and a negative sign for the latitude of a well in the Southern Hemisphere.

Enter the **WELL CLASS,** i.e., the class of injection well as defined in 40 CFR 144.6.

TIMING OF THE ACTION: Check ***Notice prior to work*** if the activity has not yet occurred (i.e., is planned). Check ***Report after work*** if the activity described has already occurred. As appropriate, include the date the activity is expected to start or the date the activity was completed. (Note this may not be available, e.g., for a plugging plan submitted with a permit application.)

TYPE OF ACTION: Check the appropriate box to describe the kind of activity being reported. Check ***Well Rework*** for work that was/will be performed on the well after it has already been in operation as an injection well. Check ***Plugging and Abandonment*** to report on plans for or descriptions of final closure/plugging after use as an injection well. Check ***Conversion to a Non-Injection Well*** if the well is to be converted to something other than an injection well.

Provide a **NARRATIVE DESCRIPTION** of the work planned to be performed, or that was performed. The narrative should include a description of the main procedures planned or that occurred during the work activity. A service company report, daily report, or similar document may be attached if it includes all the requested information and is clear and legible.

For well reworks, include the following information: The reason for the well rework; depths of activity; type of activity; changes to injection well configuration, well casing, or cement behind casing; any plug added to the well and its depth; any newly drilled interval and its depth; method(s) to demonstrate that the well has mechanical integrity (as applicable); and any deviations from the approved rework plan (as applicable).

For a well plugging plan, include the following information: Reason for the well plugging; number of plugs placed, and their depths; materials used as plugs (e.g., cast iron bridge plug, cement, cement retainer); method to set plugs; and wait-on-cement times, if any. Also provide one or more cost estimates from an independent firm in the business of plugging and abandoning wells to plug the well as described in the plan.

For well plugging affidavit, include the following information: Reason for the well plugging; number of plugs placed, and their depths; materials used as plugs (e.g., cast iron bridge plug, cement, cement retainer); method to set plugs; wait-on-cement times, if any; and any deviations from the approved plugging plan (if applicable).

For conversion to a non-injection well, include the following information: Depths of activity; type of activity; changes to injection well configuration, well casing, or cement behind casing; any plug added to the well and its depth; any newly drilled interval and its depth; depths of new perforations; and method(s) to demonstrate that the well has mechanical integrity (as applicable).

For all of the above activities, include a well sketch depicting the work, results of well tests/logging performed, service company tickets, and any other available information demonstrating how the work was/is to be performed. Also, specify whether depths are below ground surface, relative to Kelly bushing, etc.

CERTIFICATION: This form must be signed and dated by either: a responsible corporate officer for a corporation, by a general partner for a partnership, by the proprietor of a sole proprietorship, or by a principal executive or ranking elected official for a public agency.

PAPERWORK REDUCTION ACT NOTICE: The public reporting and recordkeeping burden for this collection of information is estimated to average between 6.0 and 7.9 hours per response, depending on the injection well class. Burden means the total time, effort, or financial resource expended by persons to generate, maintain, retain, or disclose or provide information to or for a Federal Agency. This includes the time needed to review instructions; develop, acquire, install, and utilize technology and systems for the purposes of collecting, validating, and verifying information, processing and maintaining information, and disclosing and providing information; adjust the existing ways to comply with any previously applicable instructions and requirements; train personnel to be able to respond to the collection of information; search data sources; complete and review the collection of information; and, transmit or otherwise disclose the information. An agency may not conduct or sponsor, and a person is not required to respond to, a collection of information unless it displays a currently valid OMB control number. Send comments on the Agency's need for this information, the accuracy of the provided burden estimates, and any suggested methods for minimizing respondent burden, including the use of automated collection techniques to Director, Collection Strategies Division, U.S. Environmental Protection Agency (2822), 1200 Pennsylvania Ave., NW., Washington, D.C. 20460. Include the OMB control number in any correspondence. Do not send the completed forms to this address.

AS-BUILT COREHOLE 32MF

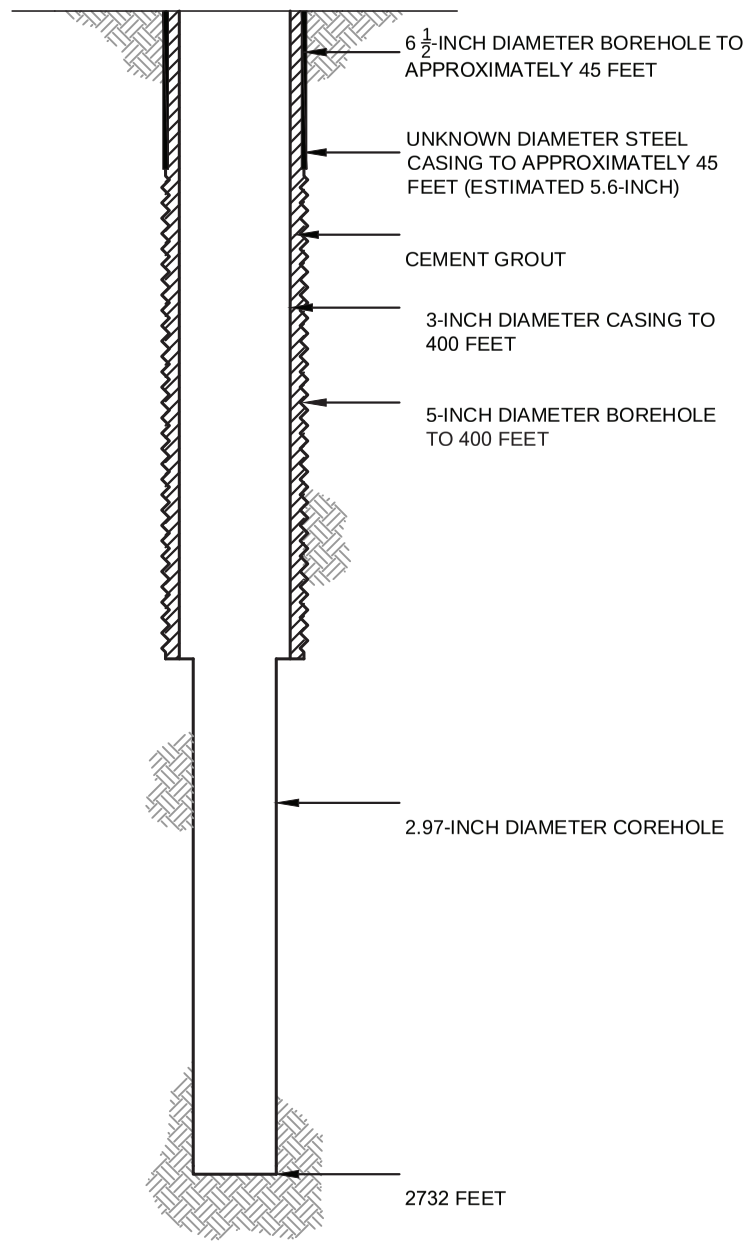

PROPOSED PLUGGING AND ABANDONMENT COREHOLE 32MF

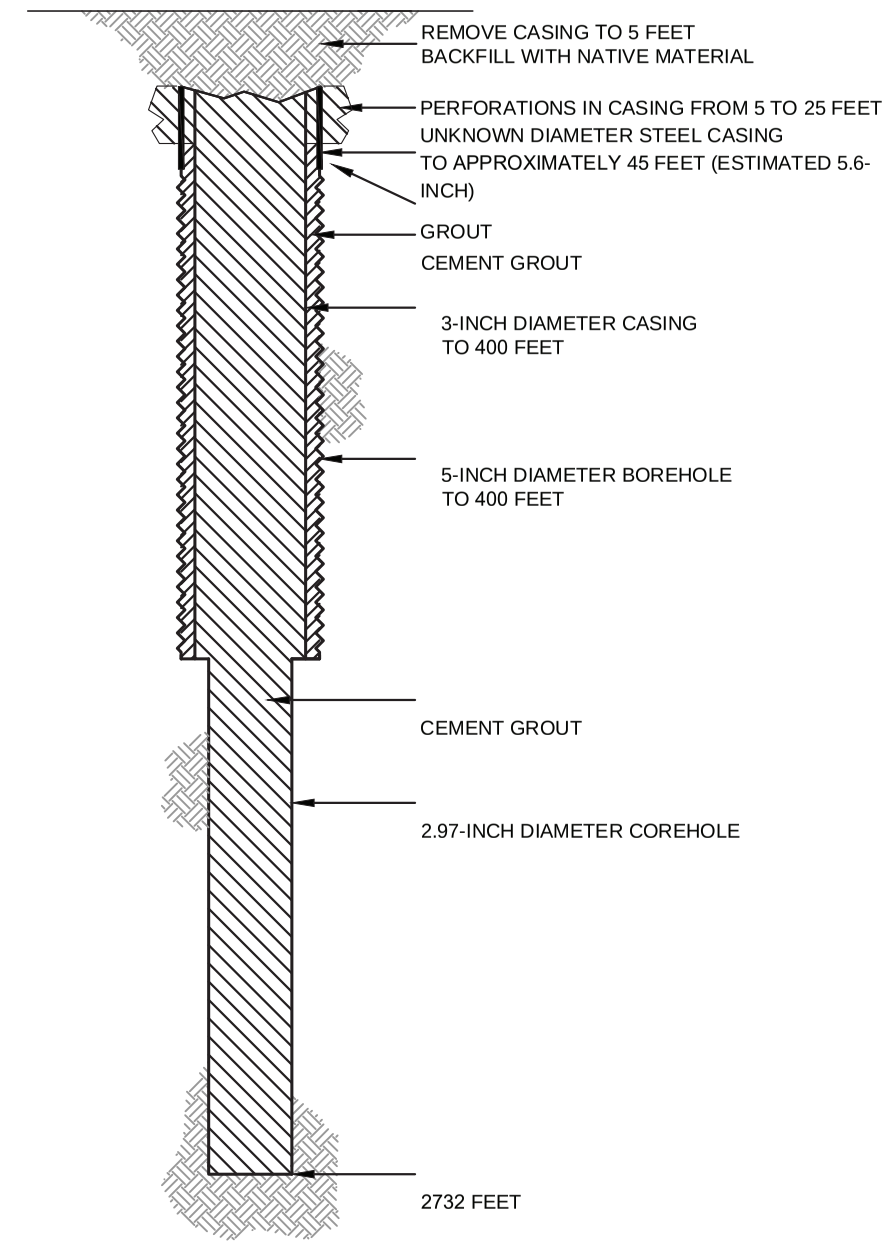

HALEY ALDRICH

FLORENCE COPPER, INC.
FLORENCE, ARIZONA

COREHOLE 32MF DIAGRAM

FLORENCE COPPER INC.

NOT TO SCALE
SEPTEMBER 2019

FIGURE 1

MOBINI, GITA Printed: 4/21/2017 12:00 PM Layout: ABANDON (2)
G:\PROJECTS\CURIS RESOURCES\38706-CURIS FEASIBILITY\DRAWINGS\EPA\WELL ABANDON\415S_ABANDON.DWG

OMB No. 2040-0042 Approval Expires 4/30/2022

United States Environmental Protection Agency

WELL REWORK RECORD, PLUGGING AND ABANDONMENT PLAN, OR PLUGGING AND ABANDONMENT AFFIDAVIT

Name and Address, Phone Number and/or Email of Permittee

Florence Copper Project
1575 W Hunt Hwy,
Florence, AZ 85132

Permit or EPA ID Number	API Number	Full Well Name
R9UIC-AZ3-FY11-1		33S

State	County
Arizona	Pinal

Locate well in two directions from nearest lines of quarter section and drilling unit

Latitude 33.05068214

Longitude -111.4266913

Surface Location

NW **1/4 of** SE **1/4 of Section** 28 **Township** 4S **Range** 9E

_____ **ft. from (N/S)** _____ **Line of quarter section**

_____ **ft. from (E/W)** _____ **Line of quarter section.**

Well Class	Timing of Action (pick one)	Type of Action (pick one)
☐ Class I ☐ Class II ☑ Class III ☐ Class V	☑ Notice Prior to Work Date Expected to Commence March 2021 ☐ Report After Work Date Work Ended	☐ Well Rework ☑ Plugging and Abandonment ☐ Conversion to a Non-Injection Well

Provide a narrative description of the work planned to be performed, or that was performed. Use additional pages as necessary. See instructions.

A workover rig capable of performing the required abandonment operations at the required depths will be moved in and set up over the core hole. The core hole will be inspected to determine the depth to which the hole remains open and if any obstructions are present in the core hole; the presence and condition of any existing collar will also be documented. If necessary, the core hole will be cleaned out to a depth of at least 100 feet below the bedrock-LBFU contact to enable placement of cement seals.

If collar is present, an attempt will be made to remove it. If removal of the collar is not feasible, it will be left in the hole and perforated as needed to allow an annular seal to be placed to a depth of at least 25 feet bgs. In areas of agricultural use, the surface casing will be cut at least 5 feet bgs and removed.

If the collar cannot be removed, it will be perforated from at least 20 feet below the bedrock-LBFU contact to at least 20 feet above the contact; from at least 20 feet below the base of the MFGU to at least 20 feet above the top of the MFGU; and from at least 25 feet bgs to 5 feet bgs.

A tremie pipe will be used to place Type V cement in the open core hole from the bottom of the core hole to the top of the core hole. Cement retainers, as described above, will be used to force cement grout into the annulus and behind perforated intervals, as necessary.

If the hole has been obstructed, as much cement as possible will be placed from 100 feet below the LBFU-bedrock contact to the top of the core hole.

The volume of Type V cement will be recorded and will not be less than the estimated volume of material required to fill each interval. All cement grout will consist of Type V cement, or equivalent approved in accordance with the UIC Permit.

Certification

I certify under the penalty of law that I have personally examined and am familiar with the information submitted in this document and all attachments and that, based on my inquiry of those individuals immediately responsible for obtaining the information, I believe that the information is true, accurate, and complete. I am aware that there are significant penalties for submitting false information, including the possibliity of fine and imprisonment. (Ref. 40 CFR § 144.32)

Name and Official Title *(Please type or print)*	Signature	Date Signed
Dan Johnson, VP - General Manager		10/3/2019

INSTRUCTIONS FOR FORM 7520-19

This form replaces forms 7520-12 and 7520-14. Use this form only when work is planned or has occurred that affects the well's construction or operation as an injection well, including work on the casing, tubing or packer (or for shallow Class V wells, the subsurface fluid emplacement network). Use one form per injection well. While reports or other information developed by contractors or service companies may be attached, this form must be signed by a responsible entity as described at 40 CFR 144.32. Note: operators closing Class V wells should use Form 7520-17.

NAME, ADDRESS, PHONE AND/OR EMAIL OF PERMITTEE: Enter the name and street address, city/town, state, and ZIP code of the permittee. Also provide an email address (if available) and/or a phone number.

PERMIT OR EPA ID NUMBER: Enter the well identification number or permit number assigned to the well by the EPA or the permitting authority.

API NUMBER: Enter the number assigned by the local jurisdiction (usually a State Oil and Gas Agency) using the American Petroleum Institute standard numbering system.

FULL WELL NAME: Enter the full name of the well or project.

Enter the **STATE** and **COUNTY** where the well is located. For States that do not have counties, use the name of that State's equivalent jurisdiction at a more local level.

WELL LOCATION: Fill in the complete township, range, and section to the nearest quarter-quarter section. A township is north or south of the baseline, and a range is east or west of the principal meridian (e.g., T12N, R34W). Also include the distance, in feet, from the nearest north or south line and nearest east or west line of the quarter-section. Also, enter the **latitude** and **longitude** of the well in decimal degrees, to five or six places if possible; be sure to include a negative sign for the longitude of a well in the Western Hemisphere and a negative sign for the latitude of a well in the Southern Hemisphere.

Enter the **WELL CLASS,** i.e., the class of injection well as defined in 40 CFR 144.6.

TIMING OF THE ACTION: Check ***Notice prior to work*** if the activity has not yet occurred (i.e., is planned). Check ***Report after work*** if the activity described has already occurred. As appropriate, include the date the activity is expected to start or the date the activity was completed. (Note this may not be available, e.g., for a plugging plan submitted with a permit application.)

TYPE OF ACTION: Check the appropriate box to describe the kind of activity being reported. Check ***Well Rework*** for work that was/will be performed on the well after it has already been in operation as an injection well. Check ***Plugging and Abandonment*** to report on plans for or descriptions of final closure/plugging after use as an injection well. Check ***Conversion to a Non-Injection Well*** if the well is to be converted to something other than an injection well.

Provide a **NARRATIVE DESCRIPTION** of the work planned to be performed, or that was performed. The narrative should include a description of the main procedures planned or that occurred during the work activity. A service company report, daily report, or similar document may be attached if it includes all the requested information and is clear and legible.

For well reworks, include the following information: The reason for the well rework; depths of activity; type of activity; changes to injection well configuration, well casing, or cement behind casing; any plug added to the well and its depth; any newly drilled interval and its depth; method(s) to demonstrate that the well has mechanical integrity (as applicable); and any deviations from the approved rework plan (as applicable).

For a well plugging plan, include the following information: Reason for the well plugging; number of plugs placed, and their depths; materials used as plugs (e.g., cast iron bridge plug, cement, cement retainer); method to set plugs; and wait-on-cement times, if any. Also provide one or more cost estimates from an independent firm in the business of plugging and abandoning wells to plug the well as described in the plan.

For well plugging affidavit, include the following information: Reason for the well plugging; number of plugs placed, and their depths; materials used as plugs (e.g., cast iron bridge plug, cement, cement retainer); method to set plugs; wait-on-cement times, if any; and any deviations from the approved plugging plan (if applicable).

For conversion to a non-injection well, include the following information: Depths of activity; type of activity; changes to injection well configuration, well casing, or cement behind casing; any plug added to the well and its depth; any newly drilled interval and its depth; depths of new perforations; and method(s) to demonstrate that the well has mechanical integrity (as applicable).

For all of the above activities, include a well sketch depicting the work, results of well tests/logging performed, service company tickets, and any other available information demonstrating how the work was/is to be performed. Also, specify whether depths are below ground surface, relative to Kelly bushing, etc.

CERTIFICATION: This form must be signed and dated by either: a responsible corporate officer for a corporation, by a general partner for a partnership, by the proprietor of a sole proprietorship, or by a principal executive or ranking elected official for a public agency.

PAPERWORK REDUCTION ACT NOTICE: The public reporting and recordkeeping burden for this collection of information is estimated to average between 6.0 and 7.9 hours per response, depending on the injection well class. Burden means the total time, effort, or financial resource expended by persons to generate, maintain, retain, or disclose or provide information to or for a Federal Agency. This includes the time needed to review instructions; develop, acquire, install, and utilize technology and systems for the purposes of collecting, validating, and verifying information, processing and maintaining information, and disclosing and providing information; adjust the existing ways to comply with any previously applicable instructions and requirements; train personnel to be able to respond to the collection of information; search data sources; complete and review the collection of information; and, transmit or otherwise disclose the information. An agency may not conduct or sponsor, and a person is not required to respond to, a collection of information unless it displays a currently valid OMB control number. Send comments on the Agency's need for this information, the accuracy of the provided burden estimates, and any suggested methods for minimizing respondent burden, including the use of automated collection techniques to Director, Collection Strategies Division, U.S. Environmental Protection Agency (2822), 1200 Pennsylvania Ave., NW., Washington, D.C. 20460. Include the OMB control number in any correspondence. Do not send the completed forms to this address.

AS-BUILT COREHOLE 33S

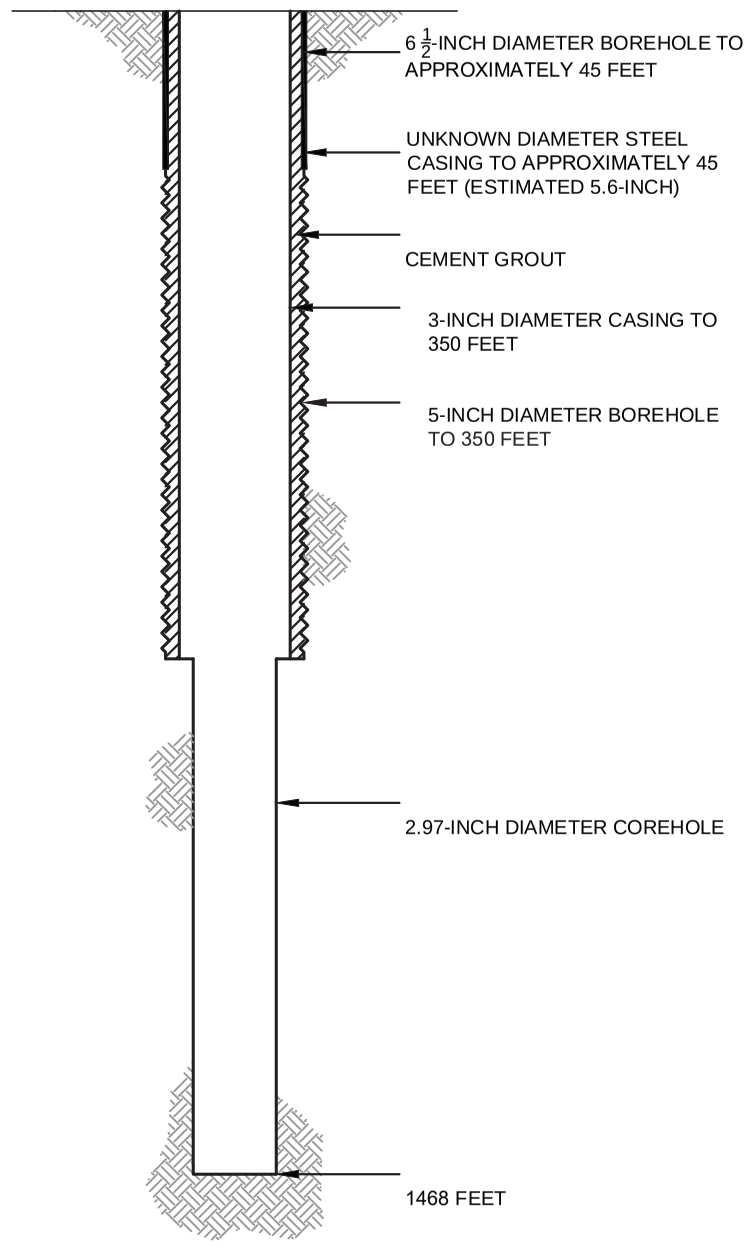

PROPOSED PLUGGING AND ABANDONMENT COREHOLE 33S

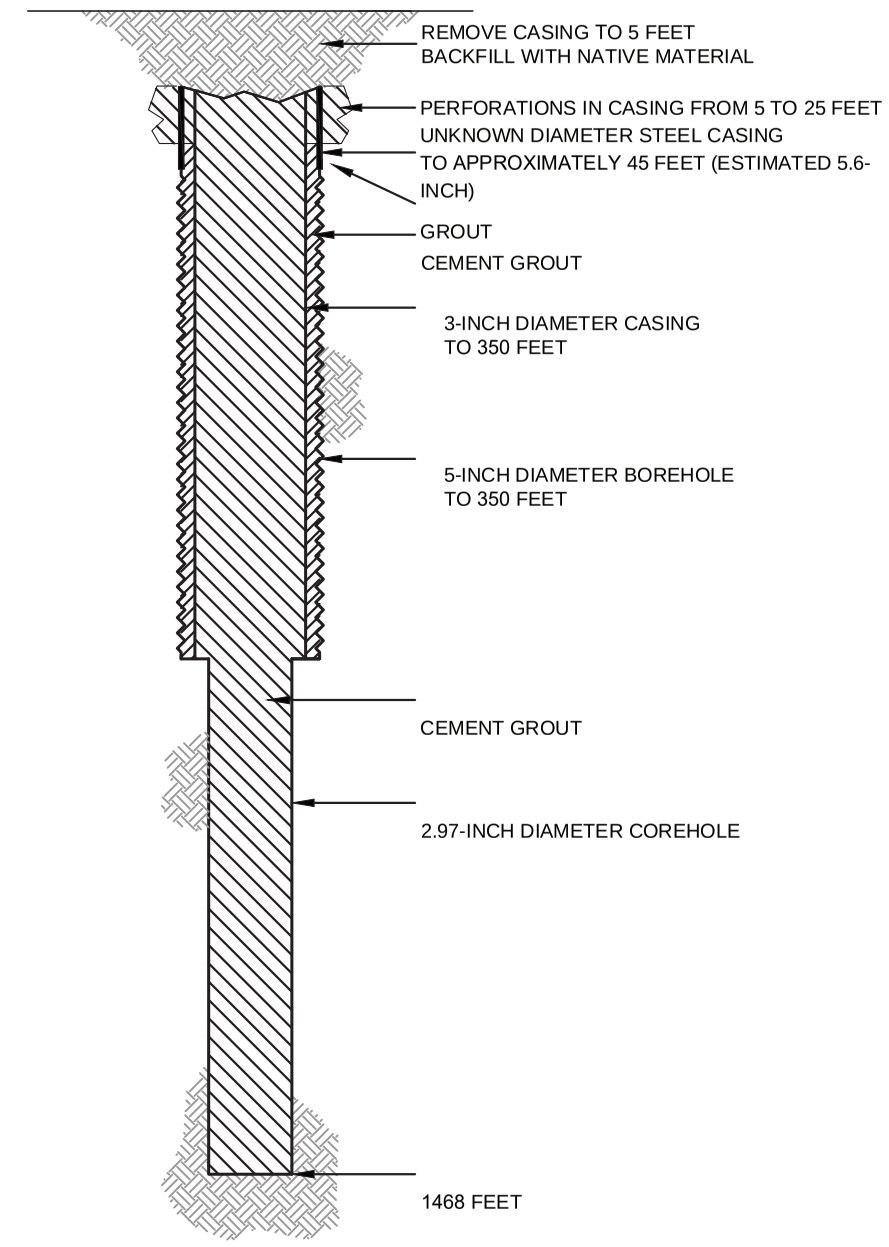

HALEY ALDRICH

FLORENCE COPPER, INC.
FLORENCE, ARIZONA

COREHOLE 33S DIAGRAM

FLORENCE COPPER INC.

NOT TO SCALE
SEPTEMBER 2019

FIGURE 1

MOBINI, GITA Printed: 4/21/2017 12:00 PM Layout: ABANDON (2)
G:\PROJECTS\CURIS RESOURCES\38706-CURIS FEASIBILITY\DRAWINGS\EPA\WELL ABANDON\415S_ABANDON.DWG

OMB No. 2040-0042 Approval Expires 4/30/2022

United States Environmental Protection Agency

WELL REWORK RECORD, PLUGGING AND ABANDONMENT PLAN, OR PLUGGING AND ABANDONMENT AFFIDAVIT

Name and Address, Phone Number and/or Email of Permittee

Florence Copper Project
1575 W Hunt Hwy,
Florence, AZ 85132

Permit or EPA ID Number	API Number	Full Well Name
R9UIC-AZ3-FY11-1		45S

State	County
Arizona	Pinal

Locate well in two directions from nearest lines of quarter section and drilling unit

Latitude 33.05217691

Surface Location

NE **1/4 of** SW **1/4 of Section** 28 **Township** 4S **Range** 9E

Longitude -111.4302923

_____ **ft. from (N/S)** _____ **Line of quarter section**

_____ **ft. from (E/W)** _____ **Line of quarter section.**

Well Class	Timing of Action (pick one)	Type of Action (pick one)
☐ Class I ☐ Class II ☑ Class III ☐ Class V	☑ Notice Prior to Work Date Expected to Commence March 2021 ☐ Report After Work Date Work Ended	☐ Well Rework ☑ Plugging and Abandonment ☐ Conversion to a Non-Injection Well

Provide a narrative description of the work planned to be performed, or that was performed. Use additional pages as necessary. See instructions.

A workover rig capable of performing the required abandonment operations at the required depths will be moved in and set up over the core hole. The core hole will be inspected to determine the depth to which the hole remains open and if any obstructions are present in the core hole; the presence and condition of any existing collar will also be documented. If necessary, the core hole will be cleaned out to a depth of at least 100 feet below the bedrock-LBFU contact to enable placement of cement seals.

If collar is present, an attempt will be made to remove it. If removal of the collar is not feasible, it will be left in the hole and perforated as needed to allow an annular seal to be placed to a depth of at least 25 feet bgs. In areas of agricultural use, the surface casing will be cut at least 5 feet bgs and removed.

If the collar cannot be removed, it will be perforated from at least 20 feet below the bedrock-LBFU contact to at least 20 feet above the contact; from at least 20 feet below the base of the MFGU to at least 20 feet above the top of the MFGU; and from at least 25 feet bgs to 5 feet bgs.

A tremie pipe will be used to place Type V cement in the open core hole from the bottom of the core hole to the top of the core hole. Cement retainers, as described above, will be used to force cement grout into the annulus and behind perforated intervals, as necessary.

If the hole has been obstructed, as much cement as possible will be placed from 100 feet below the LBFU-bedrock contact to the top of the core hole.

The volume of Type V cement will be recorded and will not be less than the estimated volume of material required to fill each interval. All cement grout will consist of Type V cement, or equivalent approved in accordance with the UIC Permit.

Certification

I certify under the penalty of law that I have personally examined and am familiar with the information submitted in this document and all attachments and that, based on my inquiry of those individuals immediately responsible for obtaining the information, I believe that the information is true, accurate, and complete. I am aware that there are significant penalties for submitting false information, including the possibliity of fine and imprisonment. (Ref. 40 CFR § 144.32)

Name and Official Title *(Please type or print)*	Signature	Date Signed
Dan Johnson, VP - General Manager		10/3/2019

INSTRUCTIONS FOR FORM 7520-19

This form replaces forms 7520-12 and 7520-14. Use this form only when work is planned or has occurred that affects the well's construction or operation as an injection well, including work on the casing, tubing or packer (or for shallow Class V wells, the subsurface fluid emplacement network). Use one form per injection well. While reports or other information developed by contractors or service companies may be attached, this form must be signed by a responsible entity as described at 40 CFR 144.32. Note: operators closing Class V wells should use Form 7520-17.

NAME, ADDRESS, PHONE AND/OR EMAIL OF PERMITTEE: Enter the name and street address, city/town, state, and ZIP code of the permittee. Also provide an email address (if available) and/or a phone number.

PERMIT OR EPA ID NUMBER: Enter the well identification number or permit number assigned to the well by the EPA or the permitting authority.

API NUMBER: Enter the number assigned by the local jurisdiction (usually a State Oil and Gas Agency) using the American Petroleum Institute standard numbering system.

FULL WELL NAME: Enter the full name of the well or project.

Enter the **STATE** and **COUNTY** where the well is located. For States that do not have counties, use the name of that State's equivalent jurisdiction at a more local level.

WELL LOCATION: Fill in the complete township, range, and section to the nearest quarter-quarter section. A township is north or south of the baseline, and a range is east or west of the principal meridian (e.g., T12N, R34W). Also include the distance, in feet, from the nearest north or south line and nearest east or west line of the quarter-section. Also, enter the **latitude** and **longitude** of the well in decimal degrees, to five or six places if possible; be sure to include a negative sign for the longitude of a well in the Western Hemisphere and a negative sign for the latitude of a well in the Southern Hemisphere.

Enter the **WELL CLASS,** i.e., the class of injection well as defined in 40 CFR 144.6.

TIMING OF THE ACTION: Check ***Notice prior to work*** if the activity has not yet occurred (i.e., is planned). Check ***Report after work*** if the activity described has already occurred. As appropriate, include the date the activity is expected to start or the date the activity was completed. (Note this may not be available, e.g., for a plugging plan submitted with a permit application.)

TYPE OF ACTION: Check the appropriate box to describe the kind of activity being reported. Check ***Well Rework*** for work that was/will be performed on the well after it has already been in operation as an injection well. Check ***Plugging and Abandonment*** to report on plans for or descriptions of final closure/plugging after use as an injection well. Check ***Conversion to a Non-Injection Well*** if the well is to be converted to something other than an injection well.

Provide a **NARRATIVE DESCRIPTION** of the work planned to be performed, or that was performed. The narrative should include a description of the main procedures planned or that occurred during the work activity. A service company report, daily report, or similar document may be attached if it includes all the requested information and is clear and legible.

For well reworks, include the following information: The reason for the well rework; depths of activity; type of activity; changes to injection well configuration, well casing, or cement behind casing; any plug added to the well and its depth; any newly drilled interval and its depth; method(s) to demonstrate that the well has mechanical integrity (as applicable); and any deviations from the approved rework plan (as applicable).

For a well plugging plan, include the following information: Reason for the well plugging; number of plugs placed, and their depths; materials used as plugs (e.g., cast iron bridge plug, cement, cement retainer); method to set plugs; and wait-on-cement times, if any. Also provide one or more cost estimates from an independent firm in the business of plugging and abandoning wells to plug the well as described in the plan.

For well plugging affidavit, include the following information: Reason for the well plugging; number of plugs placed, and their depths; materials used as plugs (e.g., cast iron bridge plug, cement, cement retainer); method to set plugs; wait-on-cement times, if any; and any deviations from the approved plugging plan (if applicable).

For conversion to a non-injection well, include the following information: Depths of activity; type of activity; changes to injection well configuration, well casing, or cement behind casing; any plug added to the well and its depth; any newly drilled interval and its depth; depths of new perforations; and method(s) to demonstrate that the well has mechanical integrity (as applicable).

For all of the above activities, include a well sketch depicting the work, results of well tests/logging performed, service company tickets, and any other available information demonstrating how the work was/is to be performed. Also, specify whether depths are below ground surface, relative to Kelly bushing, etc.

CERTIFICATION: This form must be signed and dated by either: a responsible corporate officer for a corporation, by a general partner for a partnership, by the proprietor of a sole proprietorship, or by a principal executive or ranking elected official for a public agency.

PAPERWORK REDUCTION ACT NOTICE: The public reporting and recordkeeping burden for this collection of information is estimated to average between 6.0 and 7.9 hours per response, depending on the injection well class. Burden means the total time, effort, or financial resource expended by persons to generate, maintain, retain, or disclose or provide information to or for a Federal Agency. This includes the time needed to review instructions; develop, acquire, install, and utilize technology and systems for the purposes of collecting, validating, and verifying information, processing and maintaining information, and disclosing and providing information; adjust the existing ways to comply with any previously applicable instructions and requirements; train personnel to be able to respond to the collection of information; search data sources; complete and review the collection of information; and, transmit or otherwise disclose the information. An agency may not conduct or sponsor, and a person is not required to respond to, a collection of information unless it displays a currently valid OMB control number. Send comments on the Agency's need for this information, the accuracy of the provided burden estimates, and any suggested methods for minimizing respondent burden, including the use of automated collection techniques to Director, Collection Strategies Division, U.S. Environmental Protection Agency (2822), 1200 Pennsylvania Ave., NW., Washington, D.C. 20460. Include the OMB control number in any correspondence. Do not send the completed forms to this address.

AS-BUILT COREHOLE 45S

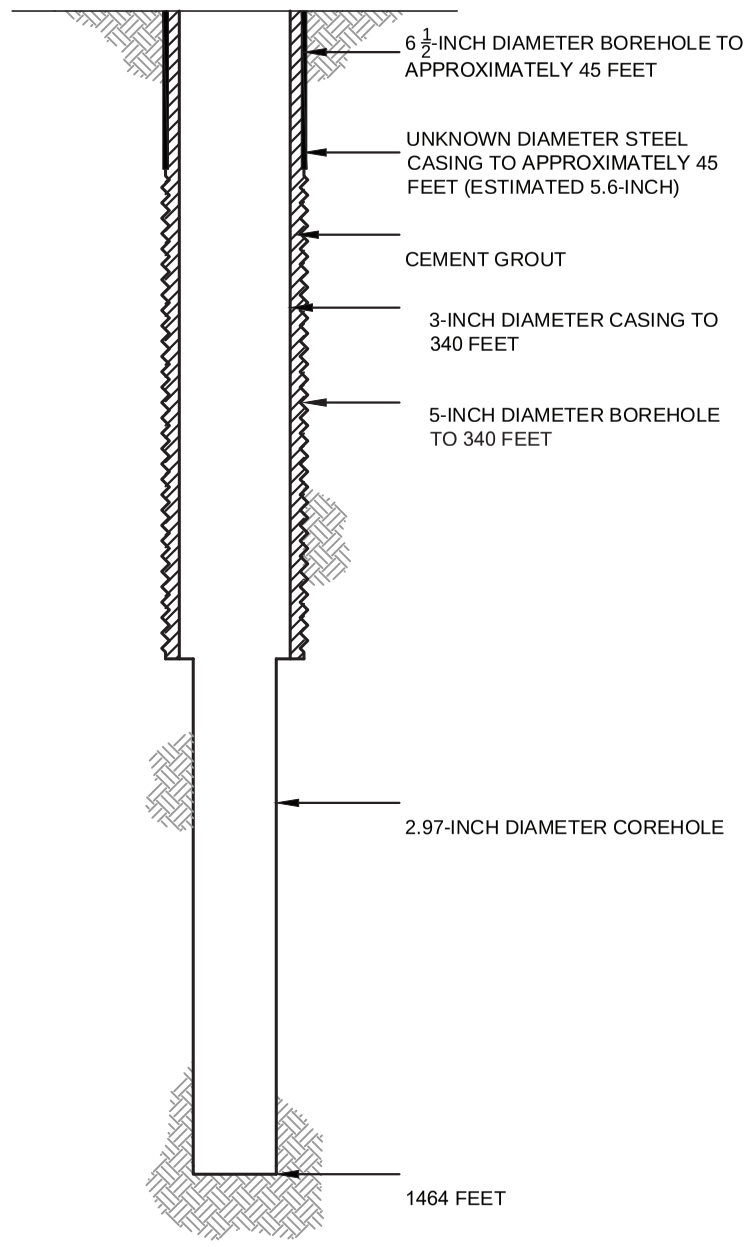

PROPOSED PLUGGING AND ABANDONMENT COREHOLE 45S

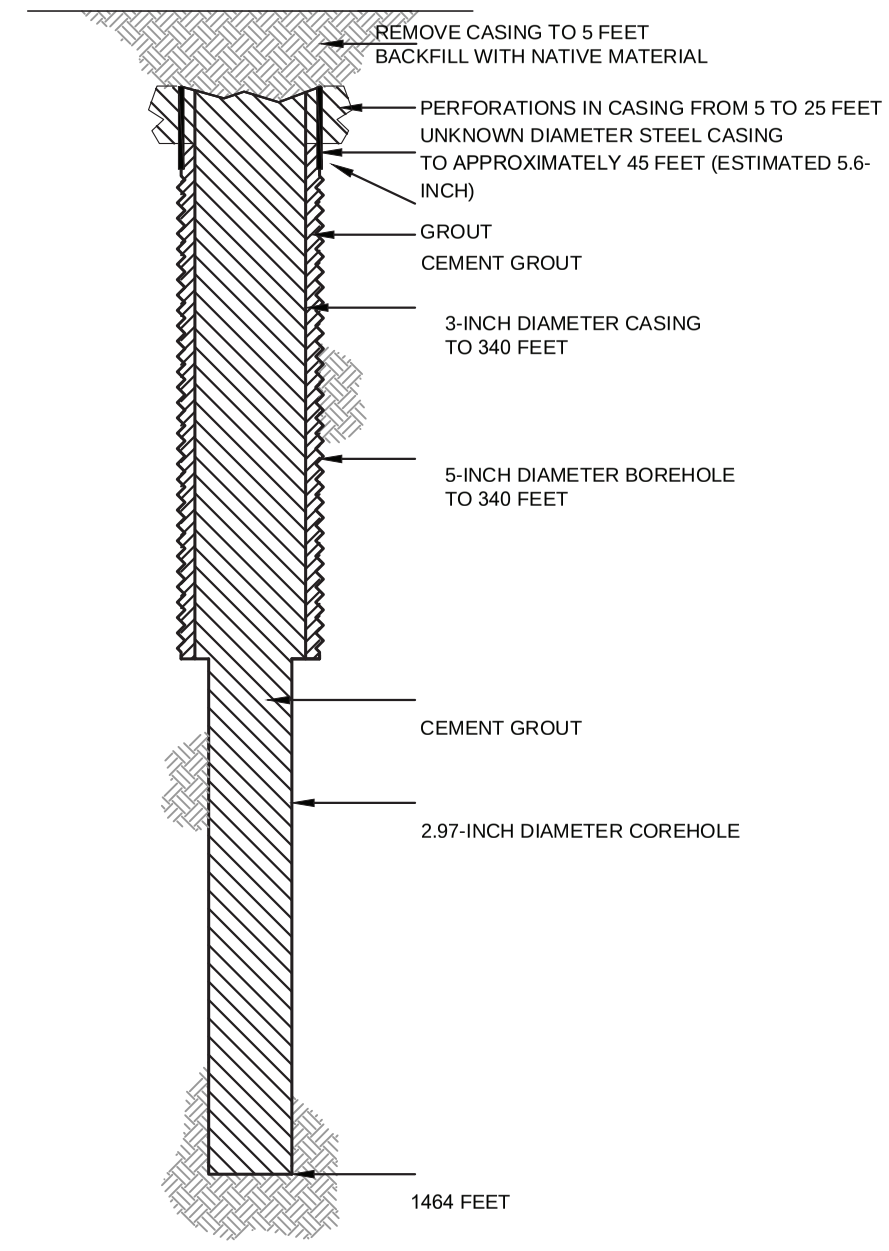

HALEY ALDRICH

FLORENCE COPPER, INC.
FLORENCE, ARIZONA

COREHOLE 45S DIAGRAM

FLORENCE COPPER INC.

NOT TO SCALE
SEPTEMBER 2019

FIGURE 1

MOBINI, GITA Printed: 4/21/2017 12:00 PM Layout: ABANDON (2)
\PROJECTS\CURIS RESOURCES38706-CURIS FEASIBILITY\DRAWINGS\EPA\WELL ABANDON\415S_ABANDON.DWG

OMB No. 2040-0042 Approval Expires 4/30/2022

United States Environmental Protection Agency

WELL REWORK RECORD, PLUGGING AND ABANDONMENT PLAN, OR PLUGGING AND ABANDONMENT AFFIDAVIT

Name and Address, Phone Number and/or Email of Permittee

Florence Copper Project
1575 W Hunt Hwy,
Florence, AZ 85132

Permit or EPA ID Number	API Number	Full Well Name
R9UIC-AZ3-FY11-1		46

State	County
Arizona	Pinal

Locate well in two directions from nearest lines of quarter section and drilling unit

Latitude 33.05340871

Longitude -111.4281494

Surface Location

SW **1/4 of** NE **1/4 of Section** 28 **Township** 4S **Range** 9E

_____ **ft. from (N/S)** _____ **Line of quarter section**

_____ **ft. from (E/W)** _____ **Line of quarter section.**

Well Class	Timing of Action (pick one)	Type of Action (pick one)
☐ Class I ☐ Class II ☑ Class III ☐ Class V	☑ Notice Prior to Work Date Expected to Commence March 2021 ☐ Report After Work Date Work Ended	☐ Well Rework ☑ Plugging and Abandonment ☐ Conversion to a Non-Injection Well

Provide a narrative description of the work planned to be performed, or that was performed. Use additional pages as necessary. See instructions.

A workover rig capable of performing the required abandonment operations at the required depths will be moved in and set up over the core hole. The core hole will be inspected to determine the depth to which the hole remains open and if any obstructions are present in the core hole; the presence and condition of any existing collar will also be documented. If necessary, the core hole will be cleaned out to a depth of at least 100 feet below the bedrock-LBFU contact to enable placement of cement seals.

If collar is present, an attempt will be made to remove it. If removal of the collar is not feasible, it will be left in the hole and perforated as needed to allow an annular seal to be placed to a depth of at least 25 feet bgs. In areas of agricultural use, the surface casing will be cut at least 5 feet bgs and removed.

If the collar cannot be removed, it will be perforated from at least 20 feet below the bedrock-LBFU contact to at least 20 feet above the contact; from at least 20 feet below the base of the MFGU to at least 20 feet above the top of the MFGU; and from at least 25 feet bgs to 5 feet bgs.

A tremie pipe will be used to place Type V cement in the open core hole from the bottom of the core hole to the top of the core hole. Cement retainers, as described above, will be used to force cement grout into the annulus and behind perforated intervals, as necessary.

If the hole has been obstructed, as much cement as possible will be placed from 100 feet below the LBFU-bedrock contact to the top of the core hole.

The volume of Type V cement will be recorded and will not be less than the estimated volume of material required to fill each interval. All cement grout will consist of Type V cement, or equivalent approved in accordance with the UIC Permit.

Certification

I certify under the penalty of law that I have personally examined and am familiar with the information submitted in this document and all attachments and that, based on my inquiry of those individuals immediately responsible for obtaining the information, I believe that the information is true, accurate, and complete. I am aware that there are significant penalties for submitting false information, including the possibliity of fine and imprisonment. (Ref. 40 CFR § 144.32)

Name and Official Title *(Please type or print)*	Signature	Date Signed
Dan Johnson, VP - General Manager		10/3/2019

INSTRUCTIONS FOR FORM 7520-19

This form replaces forms 7520-12 and 7520-14. Use this form only when work is planned or has occurred that affects the well's construction or operation as an injection well, including work on the casing, tubing or packer (or for shallow Class V wells, the subsurface fluid emplacement network). Use one form per injection well. While reports or other information developed by contractors or service companies may be attached, this form must be signed by a responsible entity as described at 40 CFR 144.32. Note: operators closing Class V wells should use Form 7520-17.

NAME, ADDRESS, PHONE AND/OR EMAIL OF PERMITTEE: Enter the name and street address, city/town, state, and ZIP code of the permittee. Also provide an email address (if available) and/or a phone number.

PERMIT OR EPA ID NUMBER: Enter the well identification number or permit number assigned to the well by the EPA or the permitting authority.

API NUMBER: Enter the number assigned by the local jurisdiction (usually a State Oil and Gas Agency) using the American Petroleum Institute standard numbering system.

FULL WELL NAME: Enter the full name of the well or project.

Enter the **STATE** and **COUNTY** where the well is located. For States that do not have counties, use the name of that State's equivalent jurisdiction at a more local level.

WELL LOCATION: Fill in the complete township, range, and section to the nearest quarter-quarter section. A township is north or south of the baseline, and a range is east or west of the principal meridian (e.g., T12N, R34W). Also include the distance, in feet, from the nearest north or south line and nearest east or west line of the quarter-section. Also, enter the **latitude** and **longitude** of the well in decimal degrees, to five or six places if possible; be sure to include a negative sign for the longitude of a well in the Western Hemisphere and a negative sign for the latitude of a well in the Southern Hemisphere.

Enter the **WELL CLASS,** i.e., the class of injection well as defined in 40 CFR 144.6.

TIMING OF THE ACTION: Check ***Notice prior to work*** if the activity has not yet occurred (i.e., is planned). Check ***Report after work*** if the activity described has already occurred. As appropriate, include the date the activity is expected to start or the date the activity was completed. (Note this may not be available, e.g., for a plugging plan submitted with a permit application.)

TYPE OF ACTION: Check the appropriate box to describe the kind of activity being reported. Check ***Well Rework*** for work that was/will be performed on the well after it has already been in operation as an injection well. Check ***Plugging and Abandonment*** to report on plans for or descriptions of final closure/plugging after use as an injection well. Check ***Conversion to a Non-Injection Well*** if the well is to be converted to something other than an injection well.

Provide a **NARRATIVE DESCRIPTION** of the work planned to be performed, or that was performed. The narrative should include a description of the main procedures planned or that occurred during the work activity. A service company report, daily report, or similar document may be attached if it includes all the requested information and is clear and legible.

For well reworks, include the following information: The reason for the well rework; depths of activity; type of activity; changes to injection well configuration, well casing, or cement behind casing; any plug added to the well and its depth; any newly drilled interval and its depth; method(s) to demonstrate that the well has mechanical integrity (as applicable); and any deviations from the approved rework plan (as applicable).

For a well plugging plan, include the following information: Reason for the well plugging; number of plugs placed, and their depths; materials used as plugs (e.g., cast iron bridge plug, cement, cement retainer); method to set plugs; and wait-on-cement times, if any. Also provide one or more cost estimates from an independent firm in the business of plugging and abandoning wells to plug the well as described in the plan.

For well plugging affidavit, include the following information: Reason for the well plugging; number of plugs placed, and their depths; materials used as plugs (e.g., cast iron bridge plug, cement, cement retainer); method to set plugs; wait-on-cement times, if any; and any deviations from the approved plugging plan (if applicable).

For conversion to a non-injection well, include the following information: Depths of activity; type of activity; changes to injection well configuration, well casing, or cement behind casing; any plug added to the well and its depth; any newly drilled interval and its depth; depths of new perforations; and method(s) to demonstrate that the well has mechanical integrity (as applicable).

For all of the above activities, include a well sketch depicting the work, results of well tests/logging performed, service company tickets, and any other available information demonstrating how the work was/is to be performed. Also, specify whether depths are below ground surface, relative to Kelly bushing, etc.

CERTIFICATION: This form must be signed and dated by either: a responsible corporate officer for a corporation, by a general partner for a partnership, by the proprietor of a sole proprietorship, or by a principal executive or ranking elected official for a public agency.

PAPERWORK REDUCTION ACT NOTICE: The public reporting and recordkeeping burden for this collection of information is estimated to average between 6.0 and 7.9 hours per response, depending on the injection well class. Burden means the total time, effort, or financial resource expended by persons to generate, maintain, retain, or disclose or provide information to or for a Federal Agency. This includes the time needed to review instructions; develop, acquire, install, and utilize technology and systems for the purposes of collecting, validating, and verifying information, processing and maintaining information, and disclosing and providing information; adjust the existing ways to comply with any previously applicable instructions and requirements; train personnel to be able to respond to the collection of information; search data sources; complete and review the collection of information; and, transmit or otherwise disclose the information. An agency may not conduct or sponsor, and a person is not required to respond to, a collection of information unless it displays a currently valid OMB control number. Send comments on the Agency's need for this information, the accuracy of the provided burden estimates, and any suggested methods for minimizing respondent burden, including the use of automated collection techniques to Director, Collection Strategies Division, U.S. Environmental Protection Agency (2822), 1200 Pennsylvania Ave., NW., Washington, D.C. 20460. Include the OMB control number in any correspondence. Do not send the completed forms to this address.

AS-BUILT COREHOLE 46

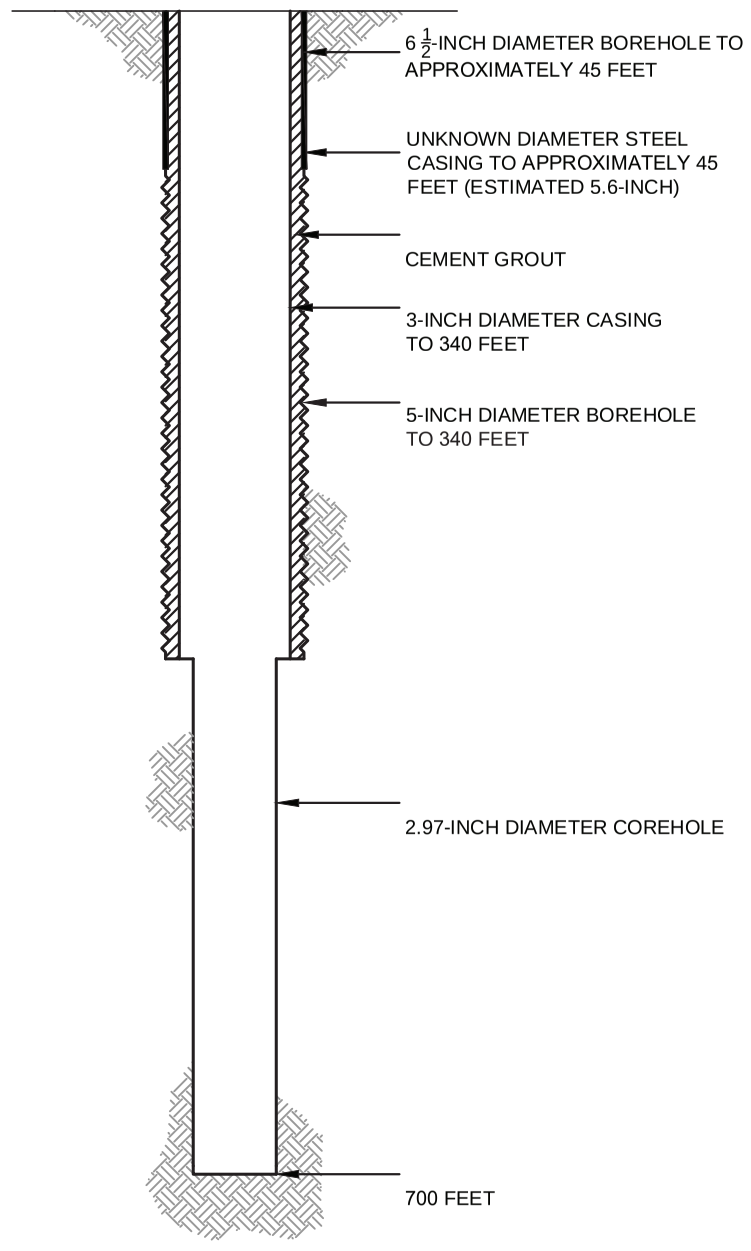

PROPOSED PLUGGING AND ABANDONMENT COREHOLE 46

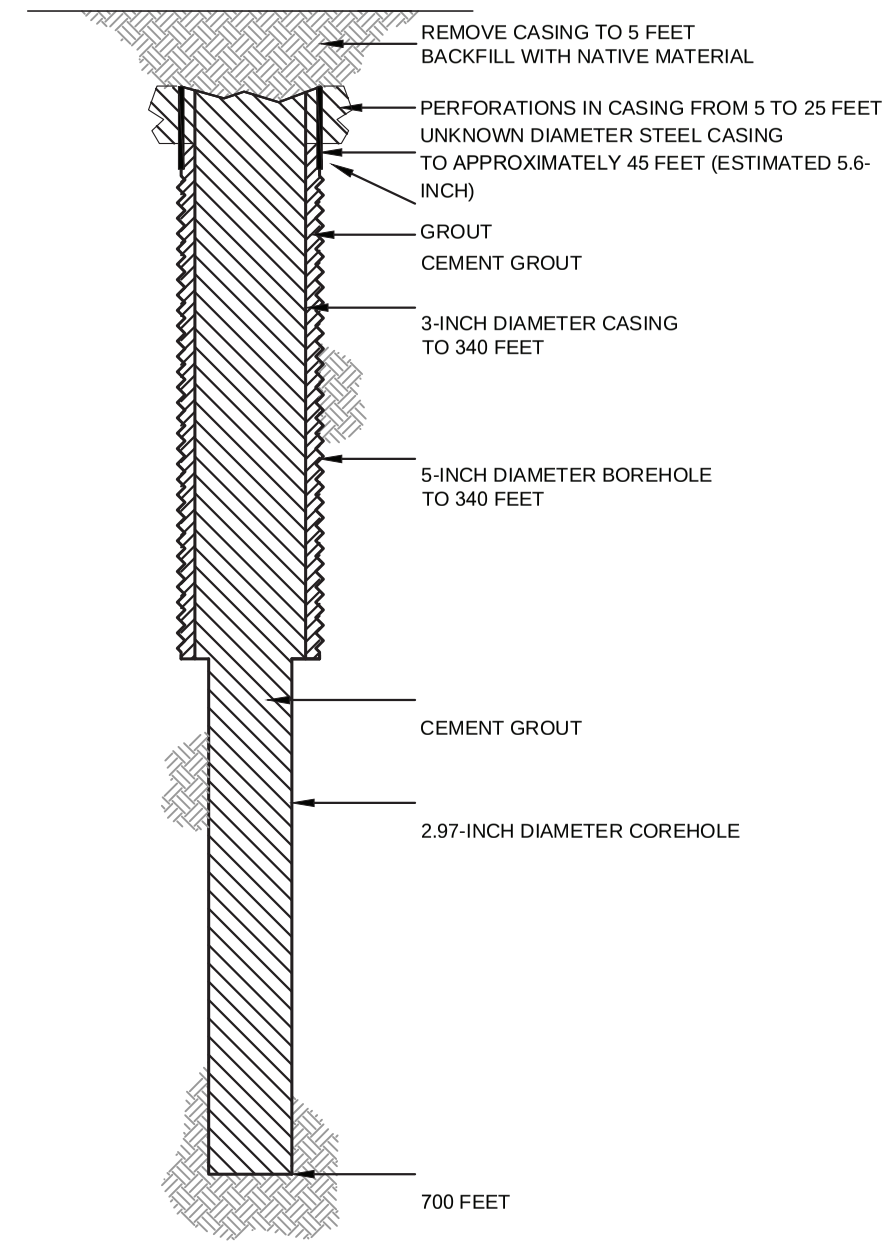

HALEY ALDRICH

FLORENCE COPPER, INC.
FLORENCE, ARIZONA

COREHOLE 46 DIAGRAM

FLORENCE COPPER INC.

NOT TO SCALE
SEPTEMBER 2019

FIGURE 1

MOBINI, GITA Printed: 4/21/2017 12:00 PM Layout: ABANDON (2)
G:\PROJECTS\CURIS RESOURCES\38706-CURIS FEASIBILITY\DRAWINGS\EPA\WELL ABANDON\415S_ABANDON.DWG

OMB No. 2040-0042 Approval Expires 4/30/2022

United States Environmental Protection Agency

WELL REWORK RECORD, PLUGGING AND ABANDONMENT PLAN, OR PLUGGING AND ABANDONMENT AFFIDAVIT

Name and Address, Phone Number and/or Email of Permittee

Florence Copper Project
1575 W Hunt Hwy,
Florence, AZ 85132

Permit or EPA ID Number	API Number	Full Well Name
R9UIC-AZ3-FY11-1		47S

State	County
Arizona	Pinal

Locate well in two directions from nearest lines of quarter section and drilling unit

Latitude 33.0521918

Longitude -111.4281235

Surface Location

NW **1/4 of** SE **1/4 of Section** 28 **Township** 4S **Range** 9E

_____ **ft. from (N/S)** _____ **Line of quarter section**

_____ **ft. from (E/W)** _____ **Line of quarter section.**

Well Class	Timing of Action (pick one)	Type of Action (pick one)
☐ Class I ☐ Class II ☑ Class III ☐ Class V	☑ Notice Prior to Work Date Expected to Commence March 2021 ☐ Report After Work Date Work Ended	☐ Well Rework ☑ Plugging and Abandonment ☐ Conversion to a Non-Injection Well

Provide a narrative description of the work planned to be performed, or that was performed. Use additional pages as necessary. See instructions.

A workover rig capable of performing the required abandonment operations at the required depths will be moved in and set up over the core hole. The core hole will be inspected to determine the depth to which the hole remains open and if any obstructions are present in the core hole; the presence and condition of any existing collar will also be documented. If necessary, the core hole will be cleaned out to a depth of at least 100 feet below the bedrock-LBFU contact to enable placement of cement seals.

If collar is present, an attempt will be made to remove it. If removal of the collar is not feasible, it will be left in the hole and perforated as needed to allow an annular seal to be placed to a depth of at least 25 feet bgs. In areas of agricultural use, the surface casing will be cut at least 5 feet bgs and removed.

If the collar cannot be removed, it will be perforated from at least 20 feet below the bedrock-LBFU contact to at least 20 feet above the contact; from at least 20 feet below the base of the MFGU to at least 20 feet above the top of the MFGU; and from at least 25 feet bgs to 5 feet bgs.

A tremie pipe will be used to place Type V cement in the open core hole from the bottom of the core hole to the top of the core hole. Cement retainers, as described above, will be used to force cement grout into the annulus and behind perforated intervals, as necessary.

If the hole has been obstructed, as much cement as possible will be placed from 100 feet below the LBFU-bedrock contact to the top of the core hole.

The volume of Type V cement will be recorded and will not be less than the estimated volume of material required to fill each interval. All cement grout will consist of Type V cement, or equivalent approved in accordance with the UIC Permit.

Certification

I certify under the penalty of law that I have personally examined and am familiar with the information submitted in this document and all attachments and that, based on my inquiry of those individuals immediately responsible for obtaining the information, I believe that the information is true, accurate, and complete. I am aware that there are significant penalties for submitting false information, including the possibliity of fine and imprisonment. (Ref. 40 CFR § 144.32)

Name and Official Title *(Please type or print)*	Signature	Date Signed
Dan Johnson, VP - General Manager		10/3/2019

INSTRUCTIONS FOR FORM 7520-19

This form replaces forms 7520-12 and 7520-14. Use this form only when work is planned or has occurred that affects the well's construction or operation as an injection well, including work on the casing, tubing or packer (or for shallow Class V wells, the subsurface fluid emplacement network). Use one form per injection well. While reports or other information developed by contractors or service companies may be attached, this form must be signed by a responsible entity as described at 40 CFR 144.32. Note: operators closing Class V wells should use Form 7520-17.

NAME, ADDRESS, PHONE AND/OR EMAIL OF PERMITTEE: Enter the name and street address, city/town, state, and ZIP code of the permittee. Also provide an email address (if available) and/or a phone number.

PERMIT OR EPA ID NUMBER: Enter the well identification number or permit number assigned to the well by the EPA or the permitting authority.

API NUMBER: Enter the number assigned by the local jurisdiction (usually a State Oil and Gas Agency) using the American Petroleum Institute standard numbering system.

FULL WELL NAME: Enter the full name of the well or project.

Enter the **STATE** and **COUNTY** where the well is located. For States that do not have counties, use the name of that State's equivalent jurisdiction at a more local level.

WELL LOCATION: Fill in the complete township, range, and section to the nearest quarter-quarter section. A township is north or south of the baseline, and a range is east or west of the principal meridian (e.g., T12N, R34W). Also include the distance, in feet, from the nearest north or south line and nearest east or west line of the quarter-section. Also, enter the **latitude** and **longitude** of the well in decimal degrees, to five or six places if possible; be sure to include a negative sign for the longitude of a well in the Western Hemisphere and a negative sign for the latitude of a well in the Southern Hemisphere.

Enter the **WELL CLASS,** i.e., the class of injection well as defined in 40 CFR 144.6.

TIMING OF THE ACTION: Check ***Notice prior to work*** if the activity has not yet occurred (i.e., is planned). Check ***Report after work*** if the activity described has already occurred. As appropriate, include the date the activity is expected to start or the date the activity was completed. (Note this may not be available, e.g., for a plugging plan submitted with a permit application.)

TYPE OF ACTION: Check the appropriate box to describe the kind of activity being reported. Check ***Well Rework*** for work that was/will be performed on the well after it has already been in operation as an injection well. Check ***Plugging and Abandonment*** to report on plans for or descriptions of final closure/plugging after use as an injection well. Check ***Conversion to a Non-Injection Well*** if the well is to be converted to something other than an injection well.

Provide a **NARRATIVE DESCRIPTION** of the work planned to be performed, or that was performed. The narrative should include a description of the main procedures planned or that occurred during the work activity. A service company report, daily report, or similar document may be attached if it includes all the requested information and is clear and legible.

For well reworks, include the following information: The reason for the well rework; depths of activity; type of activity; changes to injection well configuration, well casing, or cement behind casing; any plug added to the well and its depth; any newly drilled interval and its depth; method(s) to demonstrate that the well has mechanical integrity (as applicable); and any deviations from the approved rework plan (as applicable).

For a well plugging plan, include the following information: Reason for the well plugging; number of plugs placed, and their depths; materials used as plugs (e.g., cast iron bridge plug, cement, cement retainer); method to set plugs; and wait-on-cement times, if any. Also provide one or more cost estimates from an independent firm in the business of plugging and abandoning wells to plug the well as described in the plan.

For well plugging affidavit, include the following information: Reason for the well plugging; number of plugs placed, and their depths; materials used as plugs (e.g., cast iron bridge plug, cement, cement retainer); method to set plugs; wait-on-cement times, if any; and any deviations from the approved plugging plan (if applicable).

For conversion to a non-injection well, include the following information: Depths of activity; type of activity; changes to injection well configuration, well casing, or cement behind casing; any plug added to the well and its depth; any newly drilled interval and its depth; depths of new perforations; and method(s) to demonstrate that the well has mechanical integrity (as applicable).

For all of the above activities, include a well sketch depicting the work, results of well tests/logging performed, service company tickets, and any other available information demonstrating how the work was/is to be performed. Also, specify whether depths are below ground surface, relative to Kelly bushing, etc.

CERTIFICATION: This form must be signed and dated by either: a responsible corporate officer for a corporation, by a general partner for a partnership, by the proprietor of a sole proprietorship, or by a principal executive or ranking elected official for a public agency.

PAPERWORK REDUCTION ACT NOTICE: The public reporting and recordkeeping burden for this collection of information is estimated to average between 6.0 and 7.9 hours per response, depending on the injection well class. Burden means the total time, effort, or financial resource expended by persons to generate, maintain, retain, or disclose or provide information to or for a Federal Agency. This includes the time needed to review instructions; develop, acquire, install, and utilize technology and systems for the purposes of collecting, validating, and verifying information, processing and maintaining information, and disclosing and providing information; adjust the existing ways to comply with any previously applicable instructions and requirements; train personnel to be able to respond to the collection of information; search data sources; complete and review the collection of information; and, transmit or otherwise disclose the information. An agency may not conduct or sponsor, and a person is not required to respond to, a collection of information unless it displays a currently valid OMB control number. Send comments on the Agency's need for this information, the accuracy of the provided burden estimates, and any suggested methods for minimizing respondent burden, including the use of automated collection techniques to Director, Collection Strategies Division, U.S. Environmental Protection Agency (2822), 1200 Pennsylvania Ave., NW., Washington, D.C. 20460. Include the OMB control number in any correspondence. Do not send the completed forms to this address.

AS-BUILT COREHOLE 47S

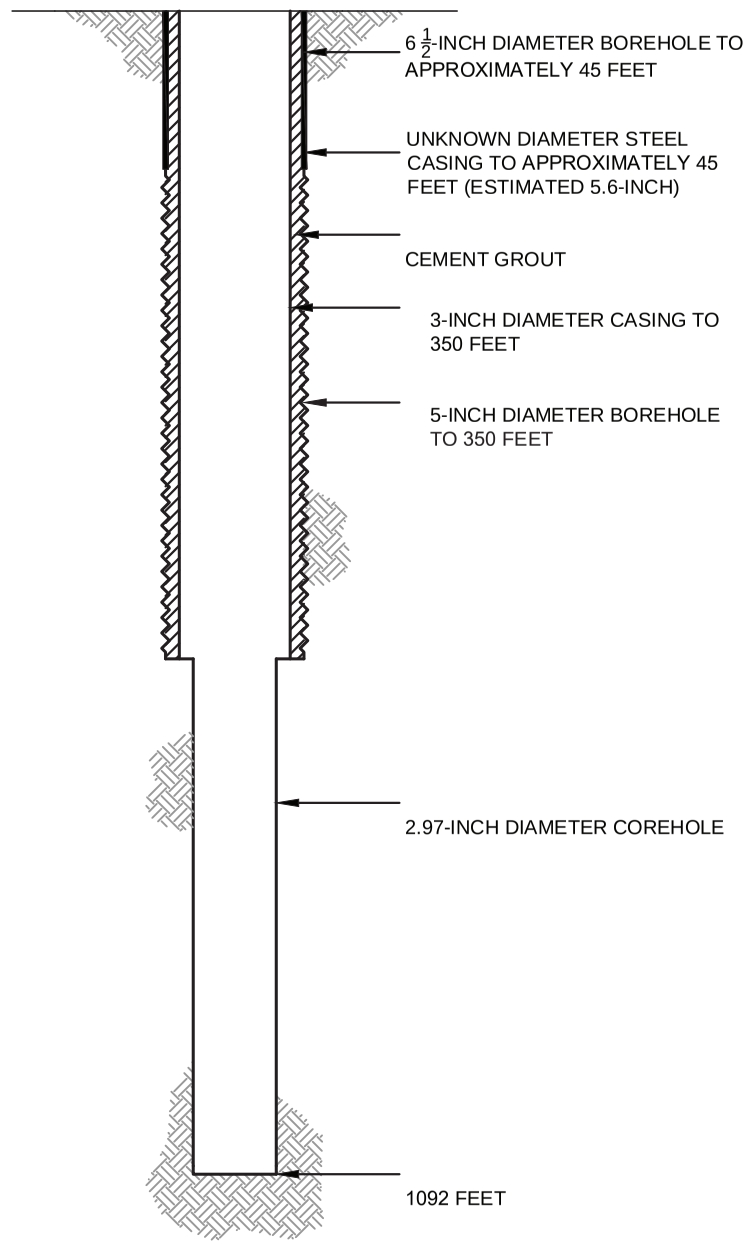

PROPOSED PLUGGING AND ABANDONMENT COREHOLE 47S

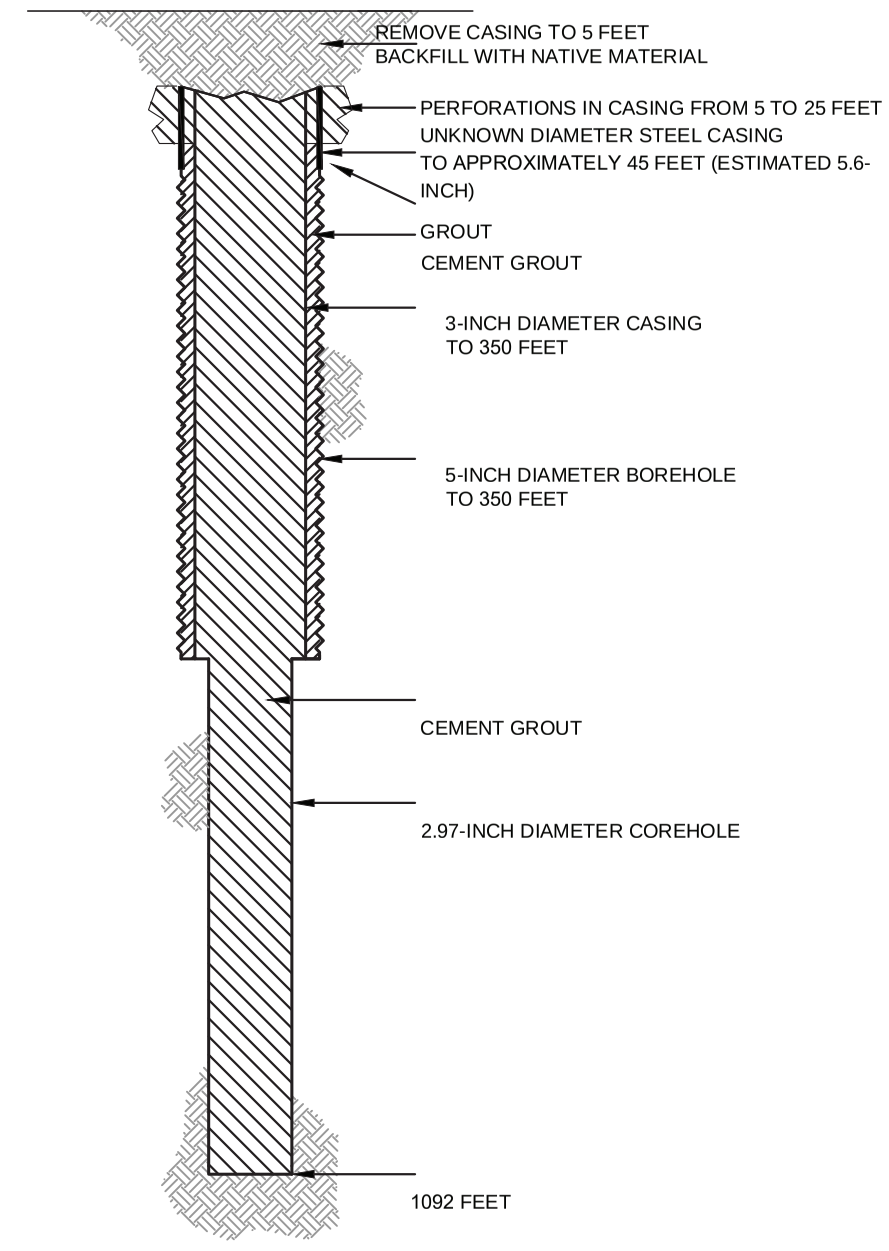

HALEY ALDRICH

FLORENCE COPPER, INC.
FLORENCE, ARIZONA

COREHOLE 47S DIAGRAM

FLORENCE COPPER INC.

NOT TO SCALE
SEPTEMBER 2019

FIGURE 1

MOBINI, GITA Printed: 4/21/2017 12:00 PM Layout: ABANDON (2)
\PROJECTS\CURIS RESOURCES38706-CURIS FEASIBILITY\DRAWINGS\EPA\WELL ABANDON\415S_ABANDON.DWG

OMB No. 2040-0042 Approval Expires 4/30/2022

United States Environmental Protection Agency

WELL REWORK RECORD, PLUGGING AND ABANDONMENT PLAN, OR PLUGGING AND ABANDONMENT AFFIDAVIT

Name and Address, Phone Number and/or Email of Permittee

Florence Copper Project
1575 W Hunt Hwy,
Florence, AZ 85132

Permit or EPA ID Number	API Number	Full Well Name
R9UIC-AZ3-FY11-1		51S

State	County
Arizona	Pinal

Locate well in two directions from nearest lines of quarter section and drilling unit

Latitude 33.05010833

Longitude -111.4371128

Surface Location

NW **1/4 of** SW **1/4 of Section** 28 **Township** 4S **Range** 9E

_____ **ft. from (N/S)** _____ **Line of quarter section**

_____ **ft. from (E/W)** _____ **Line of quarter section.**

Well Class	Timing of Action (pick one)	Type of Action (pick one)
☐ Class I ☐ Class II ☑ Class III ☐ Class V	☑ Notice Prior to Work Date Expected to Commence March 2021 ☐ Report After Work Date Work Ended	☐ Well Rework ☑ Plugging and Abandonment ☐ Conversion to a Non-Injection Well

Provide a narrative description of the work planned to be performed, or that was performed. Use additional pages as necessary. See instructions.

A workover rig capable of performing the required abandonment operations at the required depths will be moved in and set up over the core hole. The core hole will be inspected to determine the depth to which the hole remains open and if any obstructions are present in the core hole; the presence and condition of any existing collar will also be documented. If necessary, the core hole will be cleaned out to a depth of at least 100 feet below the bedrock-LBFU contact to enable placement of cement seals.

If collar is present, an attempt will be made to remove it. If removal of the collar is not feasible, it will be left in the hole and perforated as needed to allow an annular seal to be placed to a depth of at least 25 feet bgs. In areas of agricultural use, the surface casing will be cut at least 5 feet bgs and removed.

If the collar cannot be removed, it will be perforated from at least 20 feet below the bedrock-LBFU contact to at least 20 feet above the contact; from at least 20 feet below the base of the MFGU to at least 20 feet above the top of the MFGU; and from at least 25 feet bgs to 5 feet bgs.

A tremie pipe will be used to place Type V cement in the open core hole from the bottom of the core hole to the top of the core hole. Cement retainers, as described above, will be used to force cement grout into the annulus and behind perforated intervals, as necessary.

If the hole has been obstructed, as much cement as possible will be placed from 100 feet below the LBFU-bedrock contact to the top of the core hole.

The volume of Type V cement will be recorded and will not be less than the estimated volume of material required to fill each interval. All cement grout will consist of Type V cement, or equivalent approved in accordance with the UIC Permit.

Certification

I certify under the penalty of law that I have personally examined and am familiar with the information submitted in this document and all attachments and that, based on my inquiry of those individuals immediately responsible for obtaining the information, I believe that the information is true, accurate, and complete. I am aware that there are significant penalties for submitting false information, including the possibliity of fine and imprisonment. (Ref. 40 CFR § 144.32)

Name and Official Title *(Please type or print)*	Signature	Date Signed
Dan Johnson, VP - General Manager		10/3/2019

INSTRUCTIONS FOR FORM 7520-19

This form replaces forms 7520-12 and 7520-14. Use this form only when work is planned or has occurred that affects the well's construction or operation as an injection well, including work on the casing, tubing or packer (or for shallow Class V wells, the subsurface fluid emplacement network). Use one form per injection well. While reports or other information developed by contractors or service companies may be attached, this form must be signed by a responsible entity as described at 40 CFR 144.32. Note: operators closing Class V wells should use Form 7520-17.

NAME, ADDRESS, PHONE AND/OR EMAIL OF PERMITTEE: Enter the name and street address, city/town, state, and ZIP code of the permittee. Also provide an email address (if available) and/or a phone number.

PERMIT OR EPA ID NUMBER: Enter the well identification number or permit number assigned to the well by the EPA or the permitting authority.

API NUMBER: Enter the number assigned by the local jurisdiction (usually a State Oil and Gas Agency) using the American Petroleum Institute standard numbering system.

FULL WELL NAME: Enter the full name of the well or project.

Enter the **STATE** and **COUNTY** where the well is located. For States that do not have counties, use the name of that State's equivalent jurisdiction at a more local level.

WELL LOCATION: Fill in the complete township, range, and section to the nearest quarter-quarter section. A township is north or south of the baseline, and a range is east or west of the principal meridian (e.g., T12N, R34W). Also include the distance, in feet, from the nearest north or south line and nearest east or west line of the quarter-section. Also, enter the **latitude** and **longitude** of the well in decimal degrees, to five or six places if possible; be sure to include a negative sign for the longitude of a well in the Western Hemisphere and a negative sign for the latitude of a well in the Southern Hemisphere.

Enter the **WELL CLASS,** i.e., the class of injection well as defined in 40 CFR 144.6.

TIMING OF THE ACTION: Check ***Notice prior to work*** if the activity has not yet occurred (i.e., is planned). Check ***Report after work*** if the activity described has already occurred. As appropriate, include the date the activity is expected to start or the date the activity was completed. (Note this may not be available, e.g., for a plugging plan submitted with a permit application.)

TYPE OF ACTION: Check the appropriate box to describe the kind of activity being reported. Check ***Well Rework*** for work that was/will be performed on the well after it has already been in operation as an injection well. Check ***Plugging and Abandonment*** to report on plans for or descriptions of final closure/plugging after use as an injection well. Check ***Conversion to a Non-Injection Well*** if the well is to be converted to something other than an injection well.

Provide a **NARRATIVE DESCRIPTION** of the work planned to be performed, or that was performed. The narrative should include a description of the main procedures planned or that occurred during the work activity. A service company report, daily report, or similar document may be attached if it includes all the requested information and is clear and legible.

For well reworks, include the following information: The reason for the well rework; depths of activity; type of activity; changes to injection well configuration, well casing, or cement behind casing; any plug added to the well and its depth; any newly drilled interval and its depth; method(s) to demonstrate that the well has mechanical integrity (as applicable); and any deviations from the approved rework plan (as applicable).

For a well plugging plan, include the following information: Reason for the well plugging; number of plugs placed, and their depths; materials used as plugs (e.g., cast iron bridge plug, cement, cement retainer); method to set plugs; and wait-on-cement times, if any. Also provide one or more cost estimates from an independent firm in the business of plugging and abandoning wells to plug the well as described in the plan.

For well plugging affidavit, include the following information: Reason for the well plugging; number of plugs placed, and their depths; materials used as plugs (e.g., cast iron bridge plug, cement, cement retainer); method to set plugs; wait-on-cement times, if any; and any deviations from the approved plugging plan (if applicable).

For conversion to a non-injection well, include the following information: Depths of activity; type of activity; changes to injection well configuration, well casing, or cement behind casing; any plug added to the well and its depth; any newly drilled interval and its depth; depths of new perforations; and method(s) to demonstrate that the well has mechanical integrity (as applicable).

For all of the above activities, include a well sketch depicting the work, results of well tests/logging performed, service company tickets, and any other available information demonstrating how the work was/is to be performed. Also, specify whether depths are below ground surface, relative to Kelly bushing, etc.

CERTIFICATION: This form must be signed and dated by either: a responsible corporate officer for a corporation, by a general partner for a partnership, by the proprietor of a sole proprietorship, or by a principal executive or ranking elected official for a public agency.

PAPERWORK REDUCTION ACT NOTICE: The public reporting and recordkeeping burden for this collection of information is estimated to average between 6.0 and 7.9 hours per response, depending on the injection well class. Burden means the total time, effort, or financial resource expended by persons to generate, maintain, retain, or disclose or provide information to or for a Federal Agency. This includes the time needed to review instructions; develop, acquire, install, and utilize technology and systems for the purposes of collecting, validating, and verifying information, processing and maintaining information, and disclosing and providing information; adjust the existing ways to comply with any previously applicable instructions and requirements; train personnel to be able to respond to the collection of information; search data sources; complete and review the collection of information; and, transmit or otherwise disclose the information. An agency may not conduct or sponsor, and a person is not required to respond to, a collection of information unless it displays a currently valid OMB control number. Send comments on the Agency's need for this information, the accuracy of the provided burden estimates, and any suggested methods for minimizing respondent burden, including the use of automated collection techniques to Director, Collection Strategies Division, U.S. Environmental Protection Agency (2822), 1200 Pennsylvania Ave., NW., Washington, D.C. 20460. Include the OMB control number in any correspondence. Do not send the completed forms to this address.

AS-BUILT COREHOLE 51S

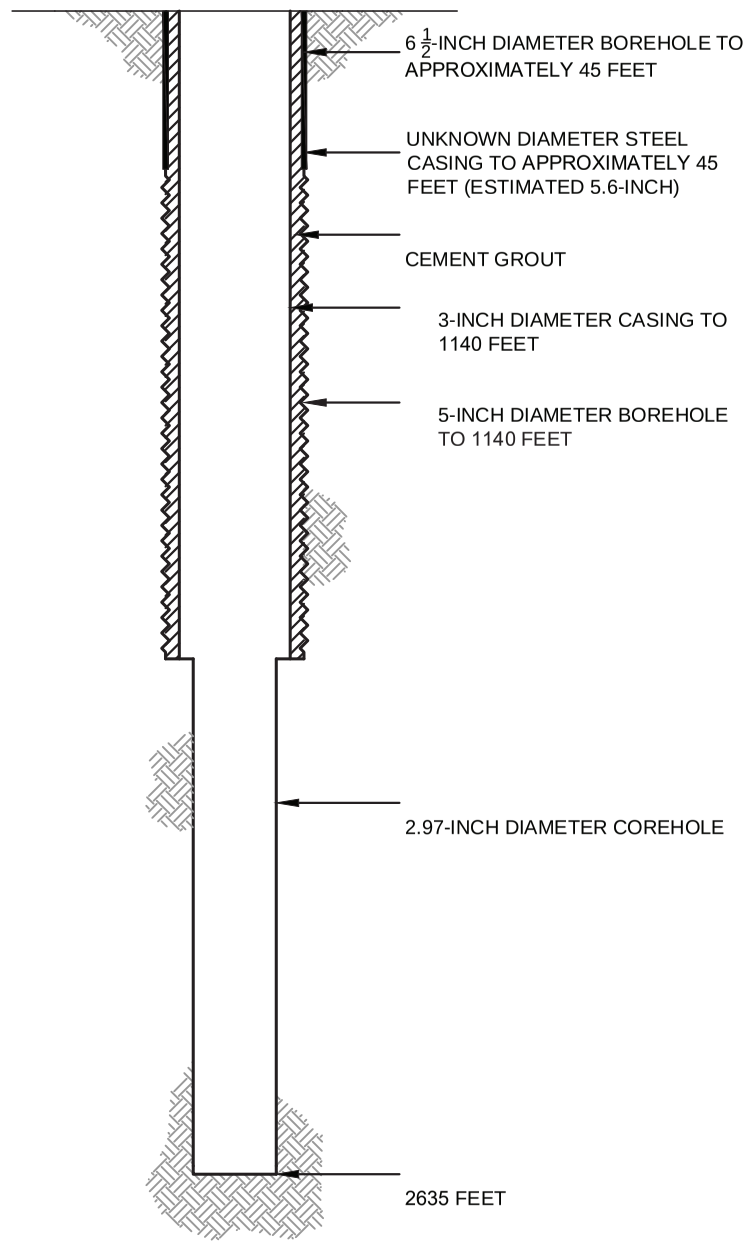

PROPOSED PLUGGING AND ABANDONMENT COREHOLE 51S

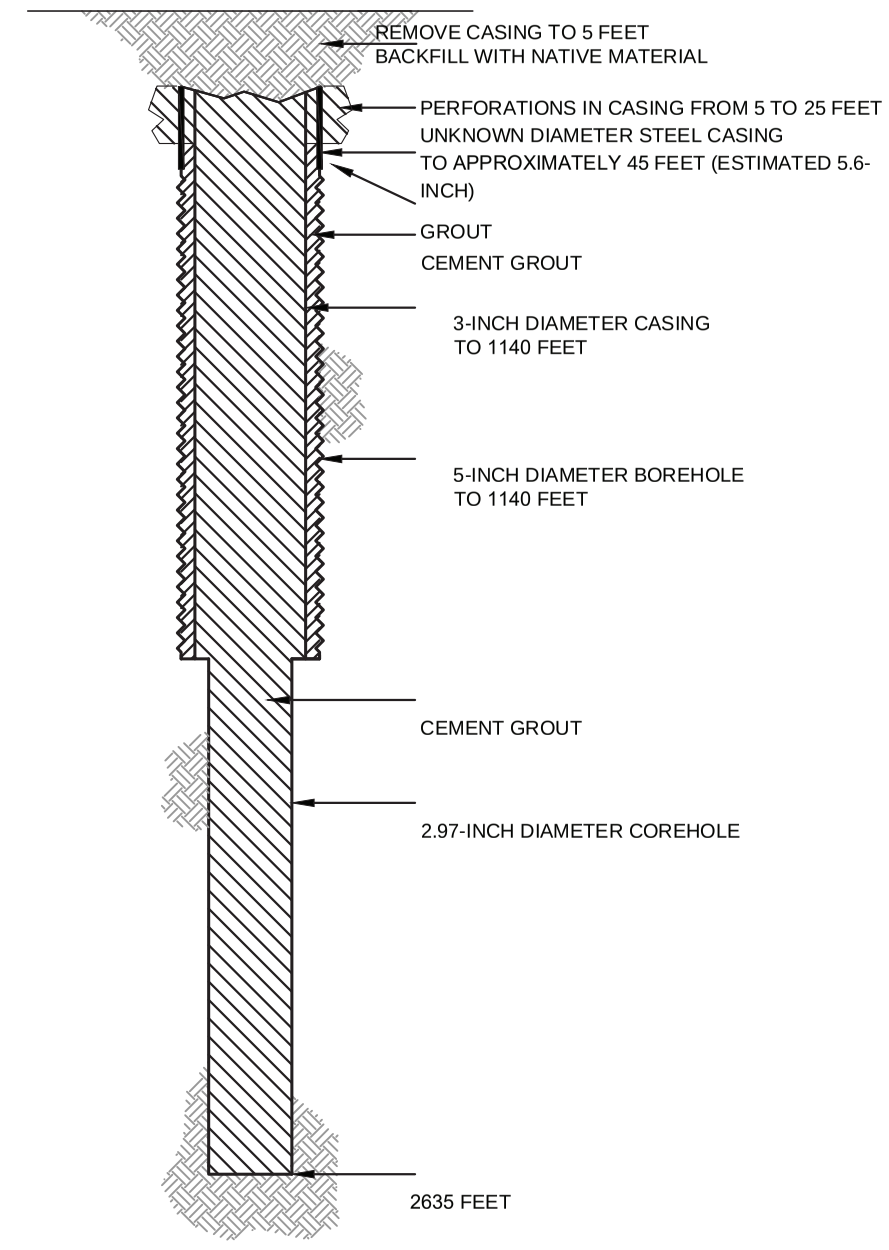

HALEY ALDRICH

FLORENCE COPPER, INC.
FLORENCE, ARIZONA

COREHOLE 51S DIAGRAM

FLORENCE COPPER INC.

NOT TO SCALE
SEPTEMBER 2019

FIGURE 1

MOBINI, GITA Printed: 4/21/2017 12:00 PM Layout: ABANDON (2)
\PROJECTS\CURIS RESOURCES38706-CURIS FEASIBILITY\DRAWINGS\EPA\WELL ABANDON\415S_ABANDON.DWG

OMB No. 2040-0042 Approval Expires 4/30/2022

United States Environmental Protection Agency

WELL REWORK RECORD, PLUGGING AND ABANDONMENT PLAN, OR PLUGGING AND ABANDONMENT AFFIDAVIT

Name and Address, Phone Number and/or Email of Permittee

Florence Copper Project
1575 W Hunt Hwy,
Florence, AZ 85132

Permit or EPA ID Number	API Number	Full Well Name
R9UIC-AZ3-FY11-1		52S

State	County
Arizona	Pinal

Locate well in two directions from nearest lines of quarter section and drilling unit

Latitude 33.05219549

Longitude -111.4257031

Surface Location

NW **1/4 of** SE **1/4 of Section** 28 **Township** 4S **Range** 9E

_____ **ft. from (N/S)** _____ **Line of quarter section**

_____ **ft. from (E/W)** _____ **Line of quarter section.**

Well Class	Timing of Action (pick one)	Type of Action (pick one)
☐ Class I ☐ Class II ☑ Class III ☐ Class V	☑ Notice Prior to Work Date Expected to Commence March 2021 ☐ Report After Work Date Work Ended	☐ Well Rework ☑ Plugging and Abandonment ☐ Conversion to a Non-Injection Well

Provide a narrative description of the work planned to be performed, or that was performed. Use additional pages as necessary. See instructions.

A workover rig capable of performing the required abandonment operations at the required depths will be moved in and set up over the core hole. The core hole will be inspected to determine the depth to which the hole remains open and if any obstructions are present in the core hole; the presence and condition of any existing collar will also be documented. If necessary, the core hole will be cleaned out to a depth of at least 100 feet below the bedrock-LBFU contact to enable placement of cement seals.

If collar is present, an attempt will be made to remove it. If removal of the collar is not feasible, it will be left in the hole and perforated as needed to allow an annular seal to be placed to a depth of at least 25 feet bgs. In areas of agricultural use, the surface casing will be cut at least 5 feet bgs and removed.

If the collar cannot be removed, it will be perforated from at least 20 feet below the bedrock-LBFU contact to at least 20 feet above the contact; from at least 20 feet below the base of the MFGU to at least 20 feet above the top of the MFGU; and from at least 25 feet bgs to 5 feet bgs.

A tremie pipe will be used to place Type V cement in the open core hole from the bottom of the core hole to the top of the core hole. Cement retainers, as described above, will be used to force cement grout into the annulus and behind perforated intervals, as necessary.

If the hole has been obstructed, as much cement as possible will be placed from 100 feet below the LBFU-bedrock contact to the top of the core hole.

The volume of Type V cement will be recorded and will not be less than the estimated volume of material required to fill each interval. All cement grout will consist of Type V cement, or equivalent approved in accordance with the UIC Permit.

Certification

I certify under the penalty of law that I have personally examined and am familiar with the information submitted in this document and all attachments and that, based on my inquiry of those individuals immediately responsible for obtaining the information, I believe that the information is true, accurate, and complete. I am aware that there are significant penalties for submitting false information, including the possibliity of fine and imprisonment. (Ref. 40 CFR § 144.32)

Name and Official Title *(Please type or print)*	Signature	Date Signed
Dan Johnson, VP - General Manager		10/3/2019

INSTRUCTIONS FOR FORM 7520-19

This form replaces forms 7520-12 and 7520-14. Use this form only when work is planned or has occurred that affects the well's construction or operation as an injection well, including work on the casing, tubing or packer (or for shallow Class V wells, the subsurface fluid emplacement network). Use one form per injection well. While reports or other information developed by contractors or service companies may be attached, this form must be signed by a responsible entity as described at 40 CFR 144.32. Note: operators closing Class V wells should use Form 7520-17.

NAME, ADDRESS, PHONE AND/OR EMAIL OF PERMITTEE: Enter the name and street address, city/town, state, and ZIP code of the permittee. Also provide an email address (if available) and/or a phone number.

PERMIT OR EPA ID NUMBER: Enter the well identification number or permit number assigned to the well by the EPA or the permitting authority.

API NUMBER: Enter the number assigned by the local jurisdiction (usually a State Oil and Gas Agency) using the American Petroleum Institute standard numbering system.

FULL WELL NAME: Enter the full name of the well or project.

Enter the **STATE** and **COUNTY** where the well is located. For States that do not have counties, use the name of that State's equivalent jurisdiction at a more local level.

WELL LOCATION: Fill in the complete township, range, and section to the nearest quarter-quarter section. A township is north or south of the baseline, and a range is east or west of the principal meridian (e.g., T12N, R34W). Also include the distance, in feet, from the nearest north or south line and nearest east or west line of the quarter-section. Also, enter the **latitude** and **longitude** of the well in decimal degrees, to five or six places if possible; be sure to include a negative sign for the longitude of a well in the Western Hemisphere and a negative sign for the latitude of a well in the Southern Hemisphere.

Enter the **WELL CLASS,** i.e., the class of injection well as defined in 40 CFR 144.6.

TIMING OF THE ACTION: Check ***Notice prior to work*** if the activity has not yet occurred (i.e., is planned). Check ***Report after work*** if the activity described has already occurred. As appropriate, include the date the activity is expected to start or the date the activity was completed. (Note this may not be available, e.g., for a plugging plan submitted with a permit application.)

TYPE OF ACTION: Check the appropriate box to describe the kind of activity being reported. Check ***Well Rework*** for work that was/will be performed on the well after it has already been in operation as an injection well. Check ***Plugging and Abandonment*** to report on plans for or descriptions of final closure/plugging after use as an injection well. Check ***Conversion to a Non-Injection Well*** if the well is to be converted to something other than an injection well.

Provide a **NARRATIVE DESCRIPTION** of the work planned to be performed, or that was performed. The narrative should include a description of the main procedures planned or that occurred during the work activity. A service company report, daily report, or similar document may be attached if it includes all the requested information and is clear and legible.

For well reworks, include the following information: The reason for the well rework; depths of activity; type of activity; changes to injection well configuration, well casing, or cement behind casing; any plug added to the well and its depth; any newly drilled interval and its depth; method(s) to demonstrate that the well has mechanical integrity (as applicable); and any deviations from the approved rework plan (as applicable).

For a well plugging plan, include the following information: Reason for the well plugging; number of plugs placed, and their depths; materials used as plugs (e.g., cast iron bridge plug, cement, cement retainer); method to set plugs; and wait-on-cement times, if any. Also provide one or more cost estimates from an independent firm in the business of plugging and abandoning wells to plug the well as described in the plan.

For well plugging affidavit, include the following information: Reason for the well plugging; number of plugs placed, and their depths; materials used as plugs (e.g., cast iron bridge plug, cement, cement retainer); method to set plugs; wait-on-cement times, if any; and any deviations from the approved plugging plan (if applicable).

For conversion to a non-injection well, include the following information: Depths of activity; type of activity; changes to injection well configuration, well casing, or cement behind casing; any plug added to the well and its depth; any newly drilled interval and its depth; depths of new perforations; and method(s) to demonstrate that the well has mechanical integrity (as applicable).

For all of the above activities, include a well sketch depicting the work, results of well tests/logging performed, service company tickets, and any other available information demonstrating how the work was/is to be performed. Also, specify whether depths are below ground surface, relative to Kelly bushing, etc.

CERTIFICATION: This form must be signed and dated by either: a responsible corporate officer for a corporation, by a general partner for a partnership, by the proprietor of a sole proprietorship, or by a principal executive or ranking elected official for a public agency.

PAPERWORK REDUCTION ACT NOTICE: The public reporting and recordkeeping burden for this collection of information is estimated to average between 6.0 and 7.9 hours per response, depending on the injection well class. Burden means the total time, effort, or financial resource expended by persons to generate, maintain, retain, or disclose or provide information to or for a Federal Agency. This includes the time needed to review instructions; develop, acquire, install, and utilize technology and systems for the purposes of collecting, validating, and verifying information, processing and maintaining information, and disclosing and providing information; adjust the existing ways to comply with any previously applicable instructions and requirements; train personnel to be able to respond to the collection of information; search data sources; complete and review the collection of information; and, transmit or otherwise disclose the information. An agency may not conduct or sponsor, and a person is not required to respond to, a collection of information unless it displays a currently valid OMB control number. Send comments on the Agency's need for this information, the accuracy of the provided burden estimates, and any suggested methods for minimizing respondent burden, including the use of automated collection techniques to Director, Collection Strategies Division, U.S. Environmental Protection Agency (2822), 1200 Pennsylvania Ave., NW., Washington, D.C. 20460. Include the OMB control number in any correspondence. Do not send the completed forms to this address.

AS-BUILT COREHOLE 52S

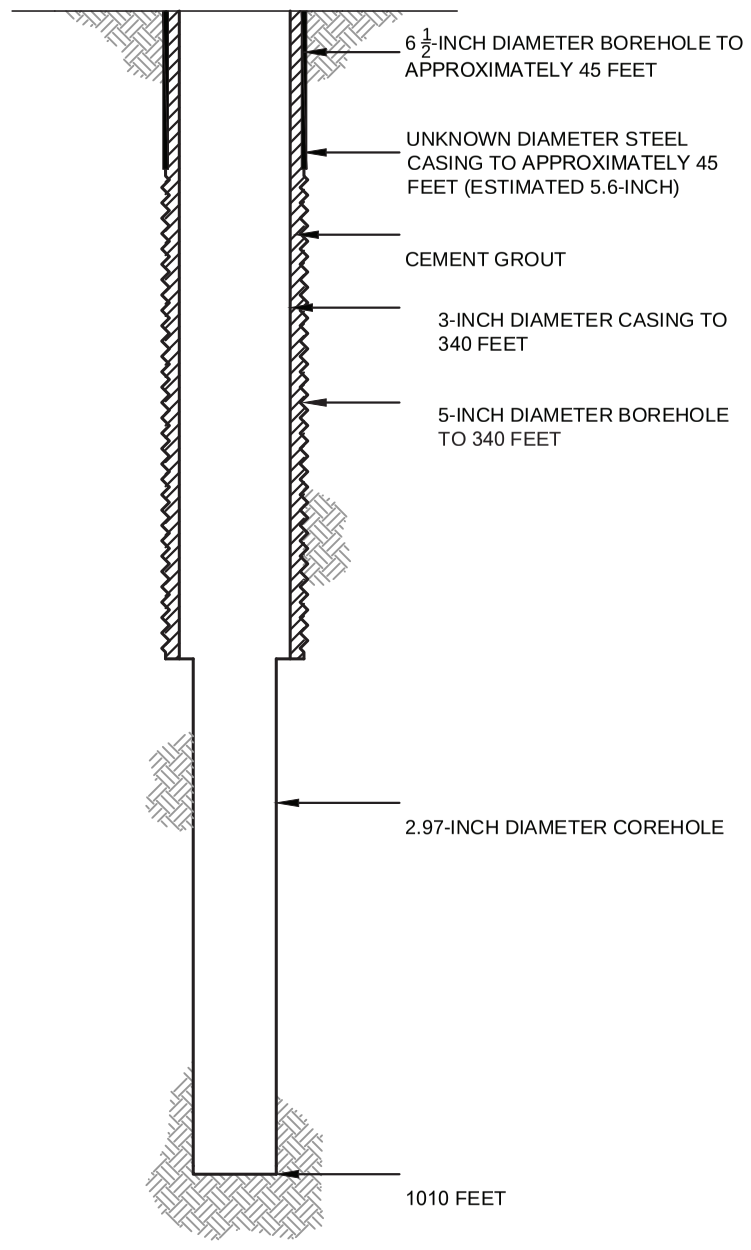

PROPOSED PLUGGING AND ABANDONMENT COREHOLE 52S

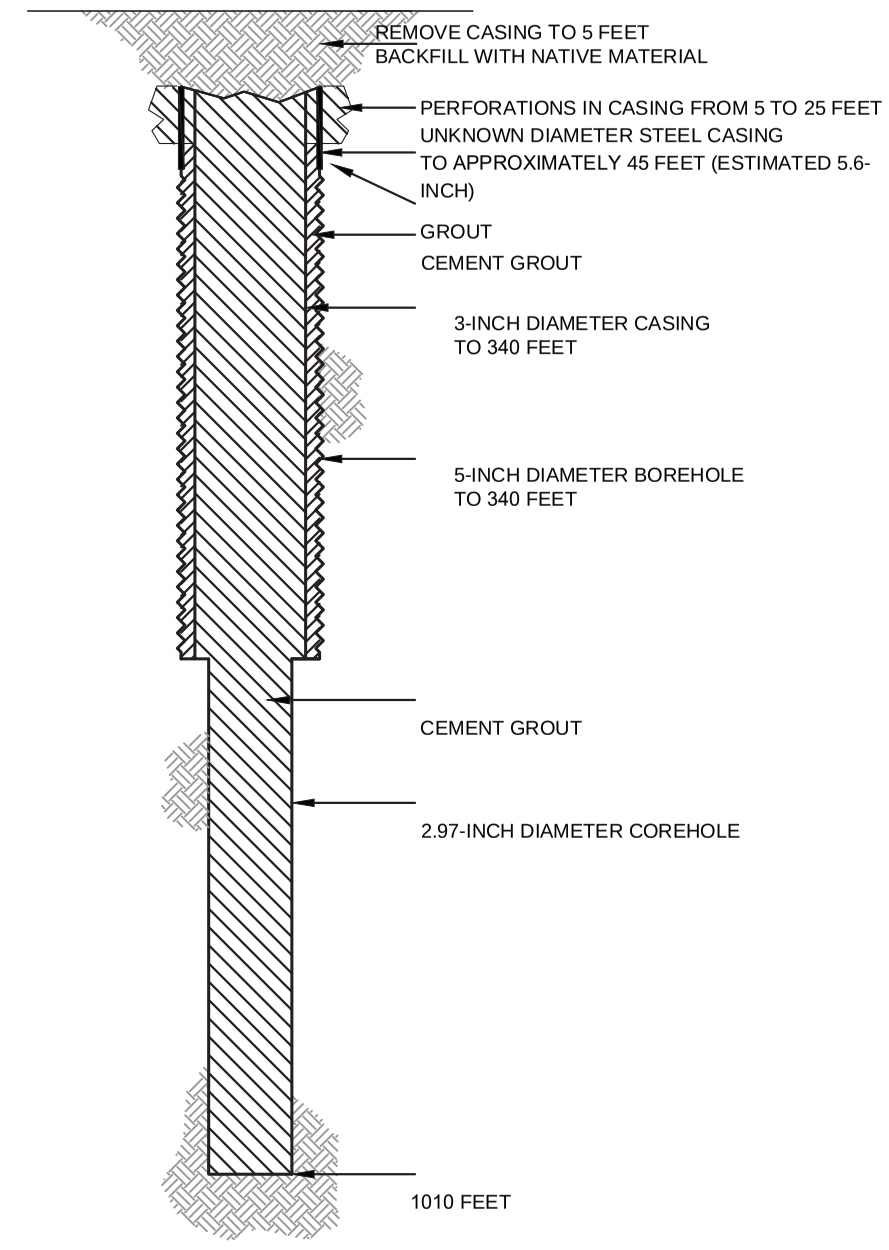

HALEY ALDRICH

FLORENCE COPPER, INC.
FLORENCE, ARIZONA

COREHOLE 52S DIAGRAM

FLORENCE COPPER INC.

NOT TO SCALE
SEPTEMBER 2019

FIGURE 1

MOBINI, GITA Printed: 4/21/2017 12:00 PM Layout: ABANDON (2)
\PROJECTS\CURIS RESOURCES38706-CURIS FEASIBILITY\DRAWINGS\EPA\WELL ABANDON\415S_ABANDON.DWG

OMB No. 2040-0042 Approval Expires 4/30/2022

United States Environmental Protection Agency

WELL REWORK RECORD, PLUGGING AND ABANDONMENT PLAN, OR PLUGGING AND ABANDONMENT AFFIDAVIT

Name and Address, Phone Number and/or Email of Permittee

Florence Copper Project
1575 W Hunt Hwy,
Florence, AZ 85132

Permit or EPA ID Number	API Number	Full Well Name
R9UIC-AZ3-FY11-1		55MF

State	County
Arizona	Pinal

Locate well in two directions from nearest lines of quarter section and drilling unit

Latitude 33.04500674

Surface Location

NE **1/4 of** NW **1/4 of Section** 33 **Township** 4S **Range** 9E

Longitude -111.4338669

_____ **ft. from (N/S)** _____ **Line of quarter section**

_____ **ft. from (E/W)** _____ **Line of quarter section.**

Well Class	Timing of Action (pick one)	Type of Action (pick one)
☐ Class I ☐ Class II ☑ Class III ☐ Class V	☑ Notice Prior to Work Date Expected to Commence March 2021 ☐ Report After Work Date Work Ended	☐ Well Rework ☑ Plugging and Abandonment ☐ Conversion to a Non-Injection Well

Provide a narrative description of the work planned to be performed, or that was performed. Use additional pages as necessary. See instructions.

A workover rig capable of performing the required abandonment operations at the required depths will be moved in and set up over the core hole. The core hole will be inspected to determine the depth to which the hole remains open and if any obstructions are present in the core hole; the presence and condition of any existing collar will also be documented. If necessary, the core hole will be cleaned out to a depth of at least 100 feet below the bedrock-LBFU contact to enable placement of cement seals.

If collar is present, an attempt will be made to remove it. If removal of the collar is not feasible, it will be left in the hole and perforated as needed to allow an annular seal to be placed to a depth of at least 25 feet bgs. In areas of agricultural use, the surface casing will be cut at least 5 feet bgs and removed.

If the collar cannot be removed, it will be perforated from at least 20 feet below the bedrock-LBFU contact to at least 20 feet above the contact; from at least 20 feet below the base of the MFGU to at least 20 feet above the top of the MFGU; and from at least 25 feet bgs to 5 feet bgs.

A tremie pipe will be used to place Type V cement in the open core hole from the bottom of the core hole to the top of the core hole. Cement retainers, as described above, will be used to force cement grout into the annulus and behind perforated intervals, as necessary.

If the hole has been obstructed, as much cement as possible will be placed from 100 feet below the LBFU-bedrock contact to the top of the core hole.

The volume of Type V cement will be recorded and will not be less than the estimated volume of material required to fill each interval. All cement grout will consist of Type V cement, or equivalent approved in accordance with the UIC Permit.

Certification

I certify under the penalty of law that I have personally examined and am familiar with the information submitted in this document and all attachments and that, based on my inquiry of those individuals immediately responsible for obtaining the information, I believe that the information is true, accurate, and complete. I am aware that there are significant penalties for submitting false information, including the possibliity of fine and imprisonment. (Ref. 40 CFR § 144.32)

Name and Official Title *(Please type or print)*	Signature	Date Signed
Dan Johnson, VP - General Manager		10/3/2019

INSTRUCTIONS FOR FORM 7520-19

This form replaces forms 7520-12 and 7520-14. Use this form only when work is planned or has occurred that affects the well's construction or operation as an injection well, including work on the casing, tubing or packer (or for shallow Class V wells, the subsurface fluid emplacement network). Use one form per injection well. While reports or other information developed by contractors or service companies may be attached, this form must be signed by a responsible entity as described at 40 CFR 144.32. Note: operators closing Class V wells should use Form 7520-17.

NAME, ADDRESS, PHONE AND/OR EMAIL OF PERMITTEE: Enter the name and street address, city/town, state, and ZIP code of the permittee. Also provide an email address (if available) and/or a phone number.

PERMIT OR EPA ID NUMBER: Enter the well identification number or permit number assigned to the well by the EPA or the permitting authority.

API NUMBER: Enter the number assigned by the local jurisdiction (usually a State Oil and Gas Agency) using the American Petroleum Institute standard numbering system.

FULL WELL NAME: Enter the full name of the well or project.

Enter the **STATE** and **COUNTY** where the well is located. For States that do not have counties, use the name of that State's equivalent jurisdiction at a more local level.

WELL LOCATION: Fill in the complete township, range, and section to the nearest quarter-quarter section. A township is north or south of the baseline, and a range is east or west of the principal meridian (e.g., T12N, R34W). Also include the distance, in feet, from the nearest north or south line and nearest east or west line of the quarter-section. Also, enter the **latitude** and **longitude** of the well in decimal degrees, to five or six places if possible; be sure to include a negative sign for the longitude of a well in the Western Hemisphere and a negative sign for the latitude of a well in the Southern Hemisphere.

Enter the **WELL CLASS,** i.e., the class of injection well as defined in 40 CFR 144.6.

TIMING OF THE ACTION: Check ***Notice prior to work*** if the activity has not yet occurred (i.e., is planned). Check ***Report after work*** if the activity described has already occurred. As appropriate, include the date the activity is expected to start or the date the activity was completed. (Note this may not be available, e.g., for a plugging plan submitted with a permit application.)

TYPE OF ACTION: Check the appropriate box to describe the kind of activity being reported. Check ***Well Rework*** for work that was/will be performed on the well after it has already been in operation as an injection well. Check ***Plugging and Abandonment*** to report on plans for or descriptions of final closure/plugging after use as an injection well. Check ***Conversion to a Non-Injection Well*** if the well is to be converted to something other than an injection well.

Provide a **NARRATIVE DESCRIPTION** of the work planned to be performed, or that was performed. The narrative should include a description of the main procedures planned or that occurred during the work activity. A service company report, daily report, or similar document may be attached if it includes all the requested information and is clear and legible.

For well reworks, include the following information: The reason for the well rework; depths of activity; type of activity; changes to injection well configuration, well casing, or cement behind casing; any plug added to the well and its depth; any newly drilled interval and its depth; method(s) to demonstrate that the well has mechanical integrity (as applicable); and any deviations from the approved rework plan (as applicable).

For a well plugging plan, include the following information: Reason for the well plugging; number of plugs placed, and their depths; materials used as plugs (e.g., cast iron bridge plug, cement, cement retainer); method to set plugs; and wait-on-cement times, if any. Also provide one or more cost estimates from an independent firm in the business of plugging and abandoning wells to plug the well as described in the plan.

For well plugging affidavit, include the following information: Reason for the well plugging; number of plugs placed, and their depths; materials used as plugs (e.g., cast iron bridge plug, cement, cement retainer); method to set plugs; wait-on-cement times, if any; and any deviations from the approved plugging plan (if applicable).

For conversion to a non-injection well, include the following information: Depths of activity; type of activity; changes to injection well configuration, well casing, or cement behind casing; any plug added to the well and its depth; any newly drilled interval and its depth; depths of new perforations; and method(s) to demonstrate that the well has mechanical integrity (as applicable).

For all of the above activities, include a well sketch depicting the work, results of well tests/logging performed, service company tickets, and any other available information demonstrating how the work was/is to be performed. Also, specify whether depths are below ground surface, relative to Kelly bushing, etc.

CERTIFICATION: This form must be signed and dated by either: a responsible corporate officer for a corporation, by a general partner for a partnership, by the proprietor of a sole proprietorship, or by a principal executive or ranking elected official for a public agency.

PAPERWORK REDUCTION ACT NOTICE: The public reporting and recordkeeping burden for this collection of information is estimated to average between 6.0 and 7.9 hours per response, depending on the injection well class. Burden means the total time, effort, or financial resource expended by persons to generate, maintain, retain, or disclose or provide information to or for a Federal Agency. This includes the time needed to review instructions; develop, acquire, install, and utilize technology and systems for the purposes of collecting, validating, and verifying information, processing and maintaining information, and disclosing and providing information; adjust the existing ways to comply with any previously applicable instructions and requirements; train personnel to be able to respond to the collection of information; search data sources; complete and review the collection of information; and, transmit or otherwise disclose the information. An agency may not conduct or sponsor, and a person is not required to respond to, a collection of information unless it displays a currently valid OMB control number. Send comments on the Agency's need for this information, the accuracy of the provided burden estimates, and any suggested methods for minimizing respondent burden, including the use of automated collection techniques to Director, Collection Strategies Division, U.S. Environmental Protection Agency (2822), 1200 Pennsylvania Ave., NW., Washington, D.C. 20460. Include the OMB control number in any correspondence. Do not send the completed forms to this address.

AS-BUILT COREHOLE 55MF

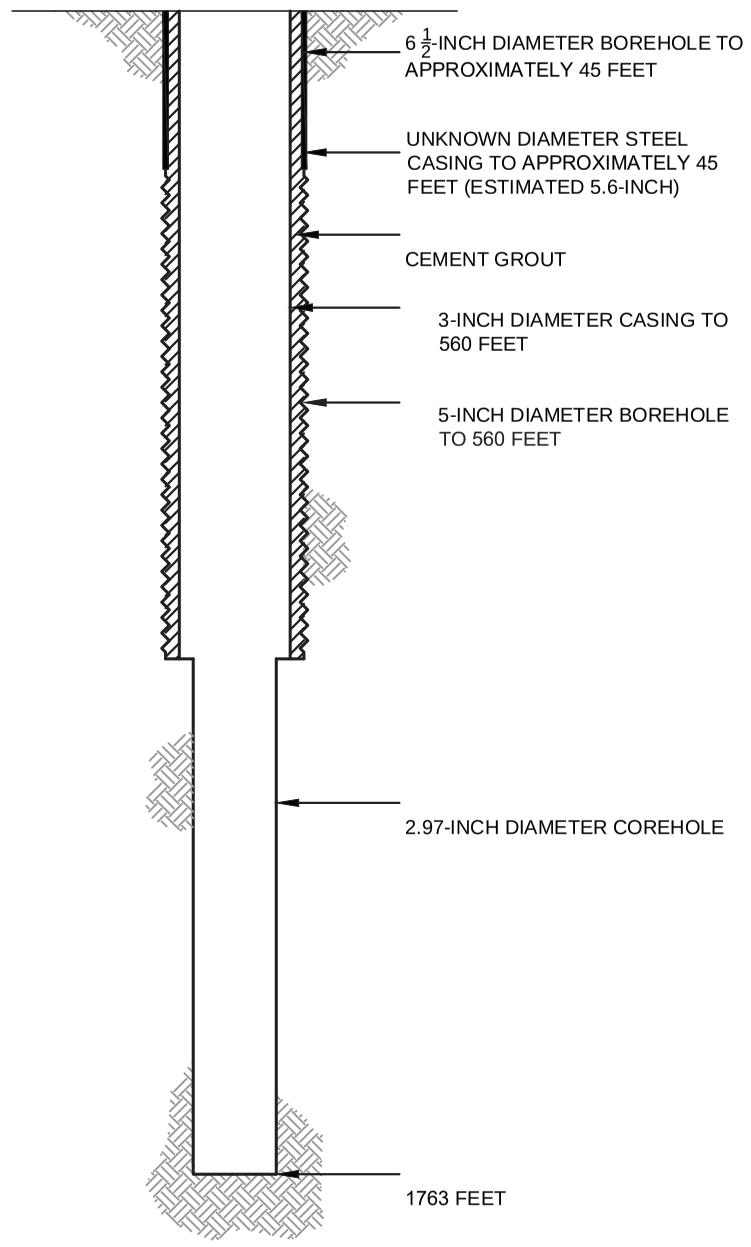

PROPOSED PLUGGING AND ABANDONMENT COREHOLE 55MF

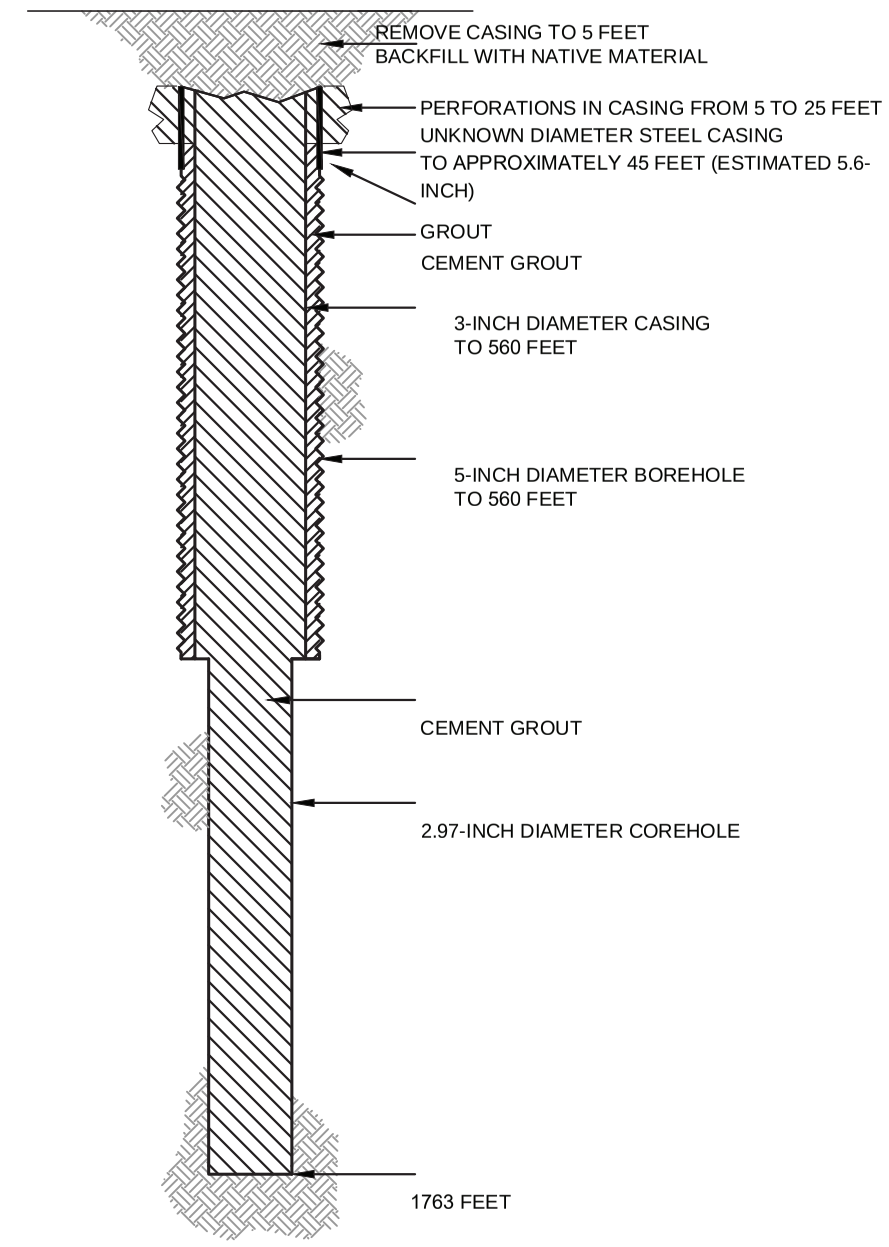

HALEY ALDRICH

FLORENCE COPPER, INC.
FLORENCE, ARIZONA

COREHOLE 55MF DIAGRAM

FLORENCE COPPER INC.

NOT TO SCALE
SEPTEMBER 2019

FIGURE 1

MOBINI, GITA Printed: 4/21/2017 12:00 PM Layout: ABANDON (2)
\PROJECTS\CURIS RESOURCES38706-CURIS FEASIBILITY\DRAWINGS\EPA\WELL ABANDON\415S_ABANDON.DWG

OMB No. 2040-0042 Approval Expires 4/30/2022

United States Environmental Protection Agency

WELL REWORK RECORD, PLUGGING AND ABANDONMENT PLAN, OR PLUGGING AND ABANDONMENT AFFIDAVIT

Name and Address, Phone Number and/or Email of Permittee

Florence Copper Project
1575 W Hunt Hwy,
Florence, AZ 85132

Permit or EPA ID Number	API Number	Full Well Name
R9UIC-AZ3-FY11-1		56MF

State	County
Arizona	Pinal

Locate well in two directions from nearest lines of quarter section and drilling unit

Latitude 33.04750213

Longitude -111.425677942

Surface Location

SW **1/4 of** SE **1/4 of Section** 28 **Township** 4S **Range** 9E

_____ **ft. from (N/S)** _____ **Line of quarter section**

_____ **ft. from (E/W)** _____ **Line of quarter section.**

Well Class	Timing of Action (pick one)	Type of Action (pick one)
☐ Class I ☐ Class II ☑ Class III ☐ Class V	☑ Notice Prior to Work Date Expected to Commence March 2021 ☐ Report After Work Date Work Ended	☐ Well Rework ☑ Plugging and Abandonment ☐ Conversion to a Non-Injection Well

Provide a narrative description of the work planned to be performed, or that was performed. Use additional pages as necessary. See instructions.

A workover rig capable of performing the required abandonment operations at the required depths will be moved in and set up over the core hole. The core hole will be inspected to determine the depth to which the hole remains open and if any obstructions are present in the core hole; the presence and condition of any existing collar will also be documented. If necessary, the core hole will be cleaned out to a depth of at least 100 feet below the bedrock-LBFU contact to enable placement of cement seals.

If collar is present, an attempt will be made to remove it. If removal of the collar is not feasible, it will be left in the hole and perforated as needed to allow an annular seal to be placed to a depth of at least 25 feet bgs. In areas of agricultural use, the surface casing will be cut at least 5 feet bgs and removed.

If the collar cannot be removed, it will be perforated from at least 20 feet below the bedrock-LBFU contact to at least 20 feet above the contact; from at least 20 feet below the base of the MFGU to at least 20 feet above the top of the MFGU; and from at least 25 feet bgs to 5 feet bgs.

A tremie pipe will be used to place Type V cement in the open core hole from the bottom of the core hole to the top of the core hole. Cement retainers, as described above, will be used to force cement grout into the annulus and behind perforated intervals, as necessary.

If the hole has been obstructed, as much cement as possible will be placed from 100 feet below the LBFU-bedrock contact to the top of the core hole.

The volume of Type V cement will be recorded and will not be less than the estimated volume of material required to fill each interval. All cement grout will consist of Type V cement, or equivalent approved in accordance with the UIC Permit.

Certification

I certify under the penalty of law that I have personally examined and am familiar with the information submitted in this document and all attachments and that, based on my inquiry of those individuals immediately responsible for obtaining the information, I believe that the information is true, accurate, and complete. I am aware that there are significant penalties for submitting false information, including the possibliity of fine and imprisonment. (Ref. 40 CFR § 144.32)

Name and Official Title *(Please type or print)*	Signature	Date Signed
Dan Johnson, VP - General Manager		10/3/2019

INSTRUCTIONS FOR FORM 7520-19

This form replaces forms 7520-12 and 7520-14. Use this form only when work is planned or has occurred that affects the well's construction or operation as an injection well, including work on the casing, tubing or packer (or for shallow Class V wells, the subsurface fluid emplacement network). Use one form per injection well. While reports or other information developed by contractors or service companies may be attached, this form must be signed by a responsible entity as described at 40 CFR 144.32. Note: operators closing Class V wells should use Form 7520-17.

NAME, ADDRESS, PHONE AND/OR EMAIL OF PERMITTEE: Enter the name and street address, city/town, state, and ZIP code of the permittee. Also provide an email address (if available) and/or a phone number.

PERMIT OR EPA ID NUMBER: Enter the well identification number or permit number assigned to the well by the EPA or the permitting authority.

API NUMBER: Enter the number assigned by the local jurisdiction (usually a State Oil and Gas Agency) using the American Petroleum Institute standard numbering system.

FULL WELL NAME: Enter the full name of the well or project.

Enter the **STATE** and **COUNTY** where the well is located. For States that do not have counties, use the name of that State's equivalent jurisdiction at a more local level.

WELL LOCATION: Fill in the complete township, range, and section to the nearest quarter-quarter section. A township is north or south of the baseline, and a range is east or west of the principal meridian (e.g., T12N, R34W). Also include the distance, in feet, from the nearest north or south line and nearest east or west line of the quarter-section. Also, enter the **latitude** and **longitude** of the well in decimal degrees, to five or six places if possible; be sure to include a negative sign for the longitude of a well in the Western Hemisphere and a negative sign for the latitude of a well in the Southern Hemisphere.

Enter the **WELL CLASS,** i.e., the class of injection well as defined in 40 CFR 144.6.

TIMING OF THE ACTION: Check ***Notice prior to work*** if the activity has not yet occurred (i.e., is planned). Check ***Report after work*** if the activity described has already occurred. As appropriate, include the date the activity is expected to start or the date the activity was completed. (Note this may not be available, e.g., for a plugging plan submitted with a permit application.)

TYPE OF ACTION: Check the appropriate box to describe the kind of activity being reported. Check ***Well Rework*** for work that was/will be performed on the well after it has already been in operation as an injection well. Check ***Plugging and Abandonment*** to report on plans for or descriptions of final closure/plugging after use as an injection well. Check ***Conversion to a Non-Injection Well*** if the well is to be converted to something other than an injection well.

Provide a **NARRATIVE DESCRIPTION** of the work planned to be performed, or that was performed. The narrative should include a description of the main procedures planned or that occurred during the work activity. A service company report, daily report, or similar document may be attached if it includes all the requested information and is clear and legible.

For well reworks, include the following information: The reason for the well rework; depths of activity; type of activity; changes to injection well configuration, well casing, or cement behind casing; any plug added to the well and its depth; any newly drilled interval and its depth; method(s) to demonstrate that the well has mechanical integrity (as applicable); and any deviations from the approved rework plan (as applicable).

For a well plugging plan, include the following information: Reason for the well plugging; number of plugs placed, and their depths; materials used as plugs (e.g., cast iron bridge plug, cement, cement retainer); method to set plugs; and wait-on-cement times, if any. Also provide one or more cost estimates from an independent firm in the business of plugging and abandoning wells to plug the well as described in the plan.

For well plugging affidavit, include the following information: Reason for the well plugging; number of plugs placed, and their depths; materials used as plugs (e.g., cast iron bridge plug, cement, cement retainer); method to set plugs; wait-on-cement times, if any; and any deviations from the approved plugging plan (if applicable).

For conversion to a non-injection well, include the following information: Depths of activity; type of activity; changes to injection well configuration, well casing, or cement behind casing; any plug added to the well and its depth; any newly drilled interval and its depth; depths of new perforations; and method(s) to demonstrate that the well has mechanical integrity (as applicable).

For all of the above activities, include a well sketch depicting the work, results of well tests/logging performed, service company tickets, and any other available information demonstrating how the work was/is to be performed. Also, specify whether depths are below ground surface, relative to Kelly bushing, etc.

CERTIFICATION: This form must be signed and dated by either: a responsible corporate officer for a corporation, by a general partner for a partnership, by the proprietor of a sole proprietorship, or by a principal executive or ranking elected official for a public agency.

PAPERWORK REDUCTION ACT NOTICE: The public reporting and recordkeeping burden for this collection of information is estimated to average between 6.0 and 7.9 hours per response, depending on the injection well class. Burden means the total time, effort, or financial resource expended by persons to generate, maintain, retain, or disclose or provide information to or for a Federal Agency. This includes the time needed to review instructions; develop, acquire, install, and utilize technology and systems for the purposes of collecting, validating, and verifying information, processing and maintaining information, and disclosing and providing information; adjust the existing ways to comply with any previously applicable instructions and requirements; train personnel to be able to respond to the collection of information; search data sources; complete and review the collection of information; and, transmit or otherwise disclose the information. An agency may not conduct or sponsor, and a person is not required to respond to, a collection of information unless it displays a currently valid OMB control number. Send comments on the Agency's need for this information, the accuracy of the provided burden estimates, and any suggested methods for minimizing respondent burden, including the use of automated collection techniques to Director, Collection Strategies Division, U.S. Environmental Protection Agency (2822), 1200 Pennsylvania Ave., NW., Washington, D.C. 20460. Include the OMB control number in any correspondence. Do not send the completed forms to this address.

AS-BUILT COREHOLE 56MF

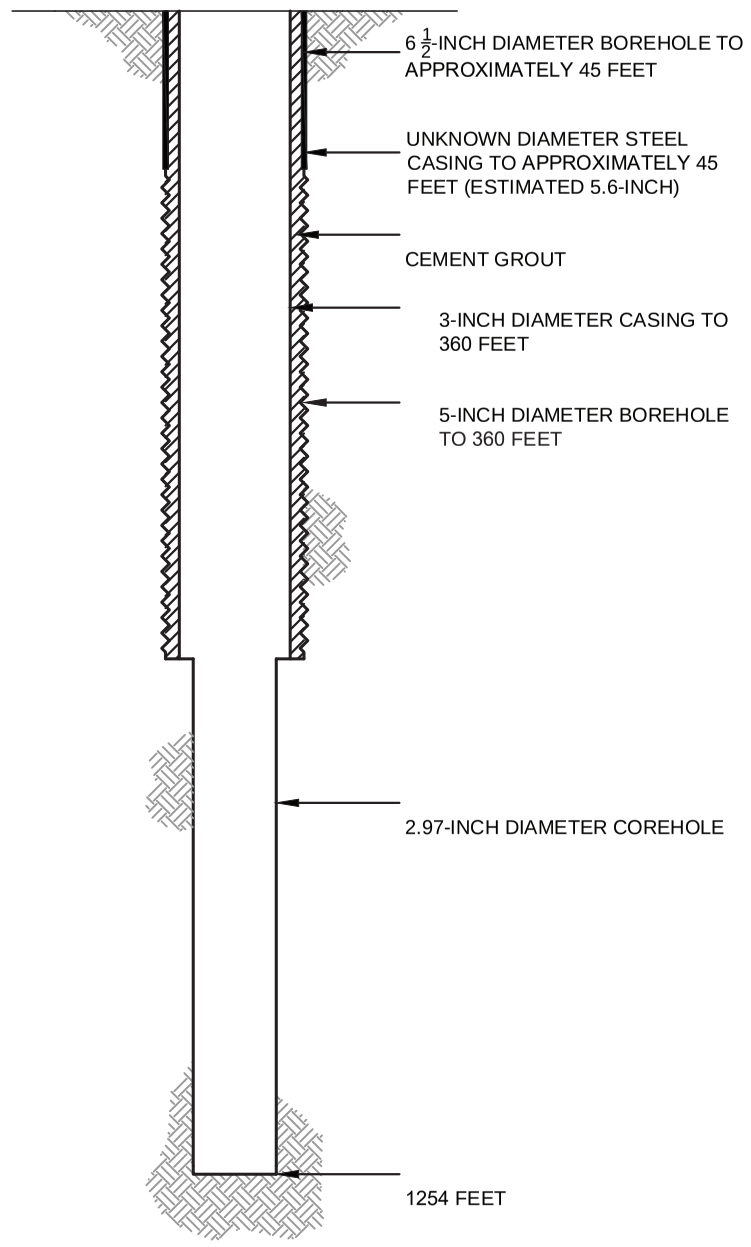

PROPOSED PLUGGING AND ABANDONMENT COREHOLE 56MF

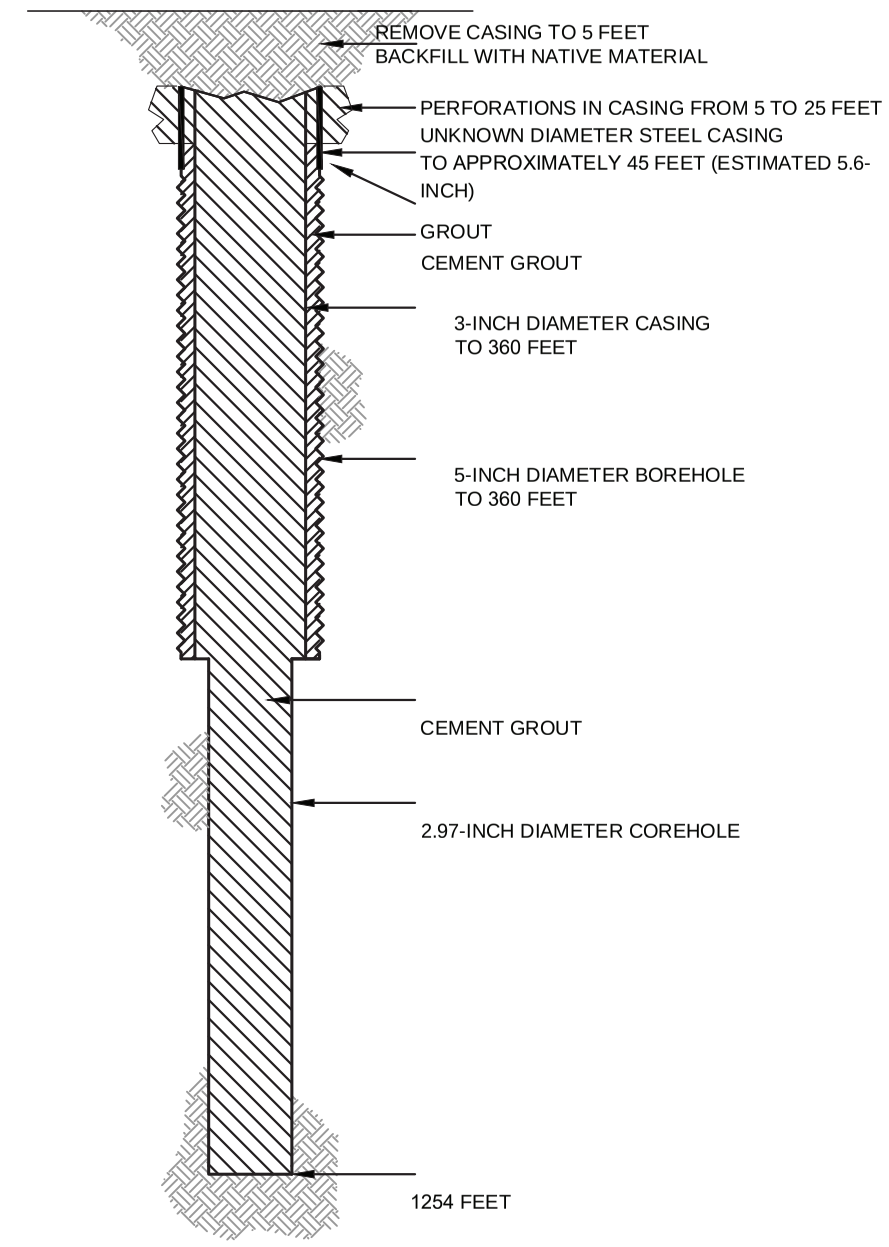

HALEY ALDRICH

FLORENCE COPPER, INC.
FLORENCE, ARIZONA

COREHOLE 56MF DIAGRAM

FLORENCE COPPER INC.

NOT TO SCALE
SEPTEMBER 2019

FIGURE 1

MOBINI, GITA Printed: 4/21/2017 12:00 PM Layout: ABANDON (2)
\PROJECTS\CURIS RESOURCES38706-CURIS FEASIBILITY\DRAWINGS\EPA\WELL ABANDON\415S_ABANDON.DWG

OMB No. 2040-0042 Approval Expires 4/30/2022

United States Environmental Protection Agency

WELL REWORK RECORD, PLUGGING AND ABANDONMENT PLAN, OR PLUGGING AND ABANDONMENT AFFIDAVIT

Name and Address, Phone Number and/or Email of Permittee

Florence Copper Project
1575 W Hunt Hwy,
Florence, AZ 85132

Permit or EPA ID Number	API Number	Full Well Name
R9UIC-AZ3-FY11-1		60MF

State	County
Arizona	Pinal

Locate well in two directions from nearest lines of quarter section and drilling unit

Surface Location

NE 1/4 of NW 1/4 of Section 33 Township 4S Range 9E

Latitude 33.04381175

Longitude -111.4314139

ft. from (N/S) Line of quarter section

ft. from (E/W) Line of quarter section.

Well Class	Timing of Action (pick one)	Type of Action (pick one)
☐ Class I ☐ Class II ☑ Class III ☐ Class V	☑ Notice Prior to Work Date Expected to Commence March 2021 ☐ Report After Work Date Work Ended	☐ Well Rework ☑ Plugging and Abandonment ☐ Conversion to a Non-Injection Well

Provide a narrative description of the work planned to be performed, or that was performed. Use additional pages as necessary. See instructions.

A workover rig capable of performing the required abandonment operations at the required depths will be moved in and set up over the core hole. The core hole will be inspected to determine the depth to which the hole remains open and if any obstructions are present in the core hole; the presence and condition of any existing collar will also be documented. If necessary, the core hole will be cleaned out to a depth of at least 100 feet below the bedrock-LBFU contact to enable placement of cement seals.

If collar is present, an attempt will be made to remove it. If removal of the collar is not feasible, it will be left in the hole and perforated as needed to allow an annular seal to be placed to a depth of at least 25 feet bgs. In areas of agricultural use, the surface casing will be cut at least 5 feet bgs and removed.

If the collar cannot be removed, it will be perforated from at least 20 feet below the bedrock-LBFU contact to at least 20 feet above the contact; from at least 20 feet below the base of the MFGU to at least 20 feet above the top of the MFGU; and from at least 25 feet bgs to 5 feet bgs.

A tremie pipe will be used to place Type V cement in the open core hole from the bottom of the core hole to the top of the core hole. Cement retainers, as described above, will be used to force cement grout into the annulus and behind perforated intervals, as necessary.

If the hole has been obstructed, as much cement as possible will be placed from 100 feet below the LBFU-bedrock contact to the top of the core hole.

The volume of Type V cement will be recorded and will not be less than the estimated volume of material required to fill each interval. All cement grout will consist of Type V cement, or equivalent approved in accordance with the UIC Permit.

Certification

I certify under the penalty of law that I have personally examined and am familiar with the information submitted in this document and all attachments and that, based on my inquiry of those individuals immediately responsible for obtaining the information, I believe that the information is true, accurate, and complete. I am aware that there are significant penalties for submitting false information, including the possibliity of fine and imprisonment. (Ref. 40 CFR § 144.32)

Name and Official Title *(Please type or print)*	Signature	Date Signed
Dan Johnson, VP - General Manager		10/3/2019

INSTRUCTIONS FOR FORM 7520-19

This form replaces forms 7520-12 and 7520-14. Use this form only when work is planned or has occurred that affects the well's construction or operation as an injection well, including work on the casing, tubing or packer (or for shallow Class V wells, the subsurface fluid emplacement network). Use one form per injection well. While reports or other information developed by contractors or service companies may be attached, this form must be signed by a responsible entity as described at 40 CFR 144.32. Note: operators closing Class V wells should use Form 7520-17.

NAME, ADDRESS, PHONE AND/OR EMAIL OF PERMITTEE: Enter the name and street address, city/town, state, and ZIP code of the permittee. Also provide an email address (if available) and/or a phone number.

PERMIT OR EPA ID NUMBER: Enter the well identification number or permit number assigned to the well by the EPA or the permitting authority.

API NUMBER: Enter the number assigned by the local jurisdiction (usually a State Oil and Gas Agency) using the American Petroleum Institute standard numbering system.

FULL WELL NAME: Enter the full name of the well or project.

Enter the **STATE** and **COUNTY** where the well is located. For States that do not have counties, use the name of that State's equivalent jurisdiction at a more local level.

WELL LOCATION: Fill in the complete township, range, and section to the nearest quarter-quarter section. A township is north or south of the baseline, and a range is east or west of the principal meridian (e.g., T12N, R34W). Also include the distance, in feet, from the nearest north or south line and nearest east or west line of the quarter-section. Also, enter the **latitude** and **longitude** of the well in decimal degrees, to five or six places if possible; be sure to include a negative sign for the longitude of a well in the Western Hemisphere and a negative sign for the latitude of a well in the Southern Hemisphere.

Enter the **WELL CLASS,** i.e., the class of injection well as defined in 40 CFR 144.6.

TIMING OF THE ACTION: Check ***Notice prior to work*** if the activity has not yet occurred (i.e., is planned). Check ***Report after work*** if the activity described has already occurred. As appropriate, include the date the activity is expected to start or the date the activity was completed. (Note this may not be available, e.g., for a plugging plan submitted with a permit application.)

TYPE OF ACTION: Check the appropriate box to describe the kind of activity being reported. Check ***Well Rework*** for work that was/will be performed on the well after it has already been in operation as an injection well. Check ***Plugging and Abandonment*** to report on plans for or descriptions of final closure/plugging after use as an injection well. Check ***Conversion to a Non-Injection Well*** if the well is to be converted to something other than an injection well.

Provide a **NARRATIVE DESCRIPTION** of the work planned to be performed, or that was performed. The narrative should include a description of the main procedures planned or that occurred during the work activity. A service company report, daily report, or similar document may be attached if it includes all the requested information and is clear and legible.

For well reworks, include the following information: The reason for the well rework; depths of activity; type of activity; changes to injection well configuration, well casing, or cement behind casing; any plug added to the well and its depth; any newly drilled interval and its depth; method(s) to demonstrate that the well has mechanical integrity (as applicable); and any deviations from the approved rework plan (as applicable).

For a well plugging plan, include the following information: Reason for the well plugging; number of plugs placed, and their depths; materials used as plugs (e.g., cast iron bridge plug, cement, cement retainer); method to set plugs; and wait-on-cement times, if any. Also provide one or more cost estimates from an independent firm in the business of plugging and abandoning wells to plug the well as described in the plan.

For well plugging affidavit, include the following information: Reason for the well plugging; number of plugs placed, and their depths; materials used as plugs (e.g., cast iron bridge plug, cement, cement retainer); method to set plugs; wait-on-cement times, if any; and any deviations from the approved plugging plan (if applicable).

For conversion to a non-injection well, include the following information: Depths of activity; type of activity; changes to injection well configuration, well casing, or cement behind casing; any plug added to the well and its depth; any newly drilled interval and its depth; depths of new perforations; and method(s) to demonstrate that the well has mechanical integrity (as applicable).

For all of the above activities, include a well sketch depicting the work, results of well tests/logging performed, service company tickets, and any other available information demonstrating how the work was/is to be performed. Also, specify whether depths are below ground surface, relative to Kelly bushing, etc.

CERTIFICATION: This form must be signed and dated by either: a responsible corporate officer for a corporation, by a general partner for a partnership, by the proprietor of a sole proprietorship, or by a principal executive or ranking elected official for a public agency.

PAPERWORK REDUCTION ACT NOTICE: The public reporting and recordkeeping burden for this collection of information is estimated to average between 6.0 and 7.9 hours per response, depending on the injection well class. Burden means the total time, effort, or financial resource expended by persons to generate, maintain, retain, or disclose or provide information to or for a Federal Agency. This includes the time needed to review instructions; develop, acquire, install, and utilize technology and systems for the purposes of collecting, validating, and verifying information, processing and maintaining information, and disclosing and providing information; adjust the existing ways to comply with any previously applicable instructions and requirements; train personnel to be able to respond to the collection of information; search data sources; complete and review the collection of information; and, transmit or otherwise disclose the information. An agency may not conduct or sponsor, and a person is not required to respond to, a collection of information unless it displays a currently valid OMB control number. Send comments on the Agency's need for this information, the accuracy of the provided burden estimates, and any suggested methods for minimizing respondent burden, including the use of automated collection techniques to Director, Collection Strategies Division, U.S. Environmental Protection Agency (2822), 1200 Pennsylvania Ave., NW., Washington, D.C. 20460. Include the OMB control number in any correspondence. Do not send the completed forms to this address.

AS-BUILT COREHOLE 60MF

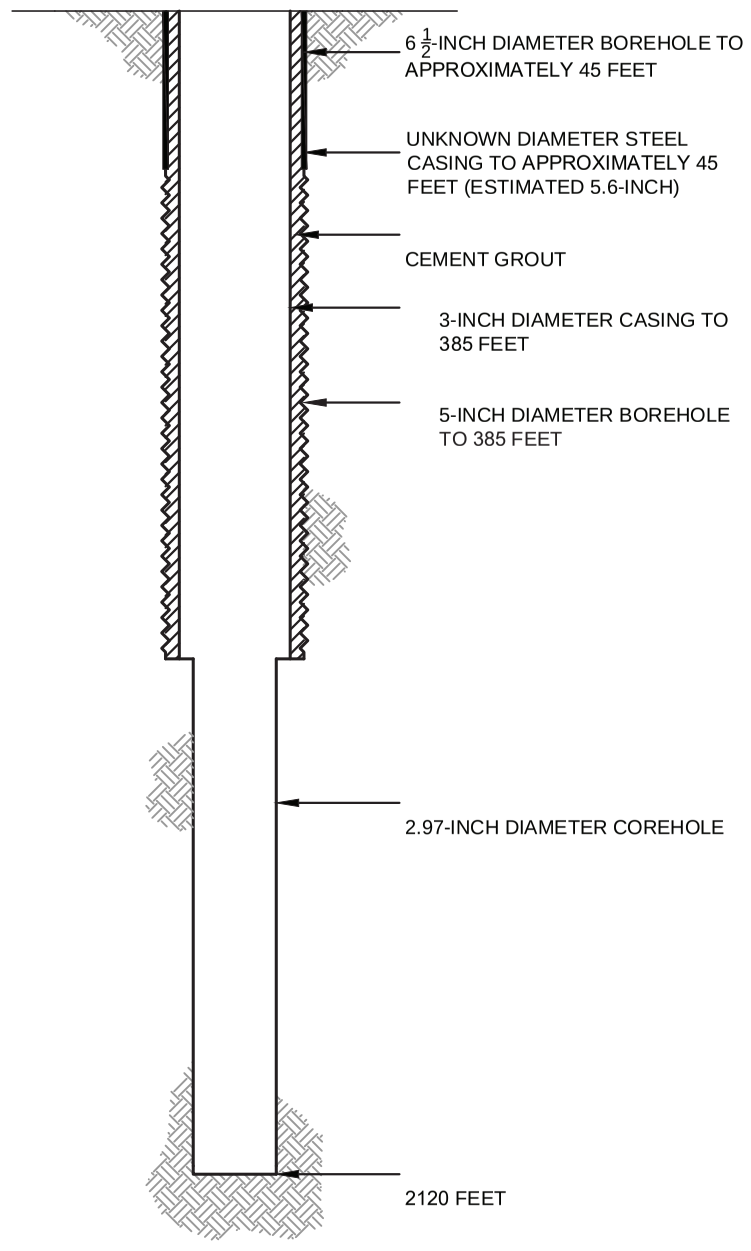

PROPOSED PLUGGING AND ABANDONMENT COREHOLE 60MF

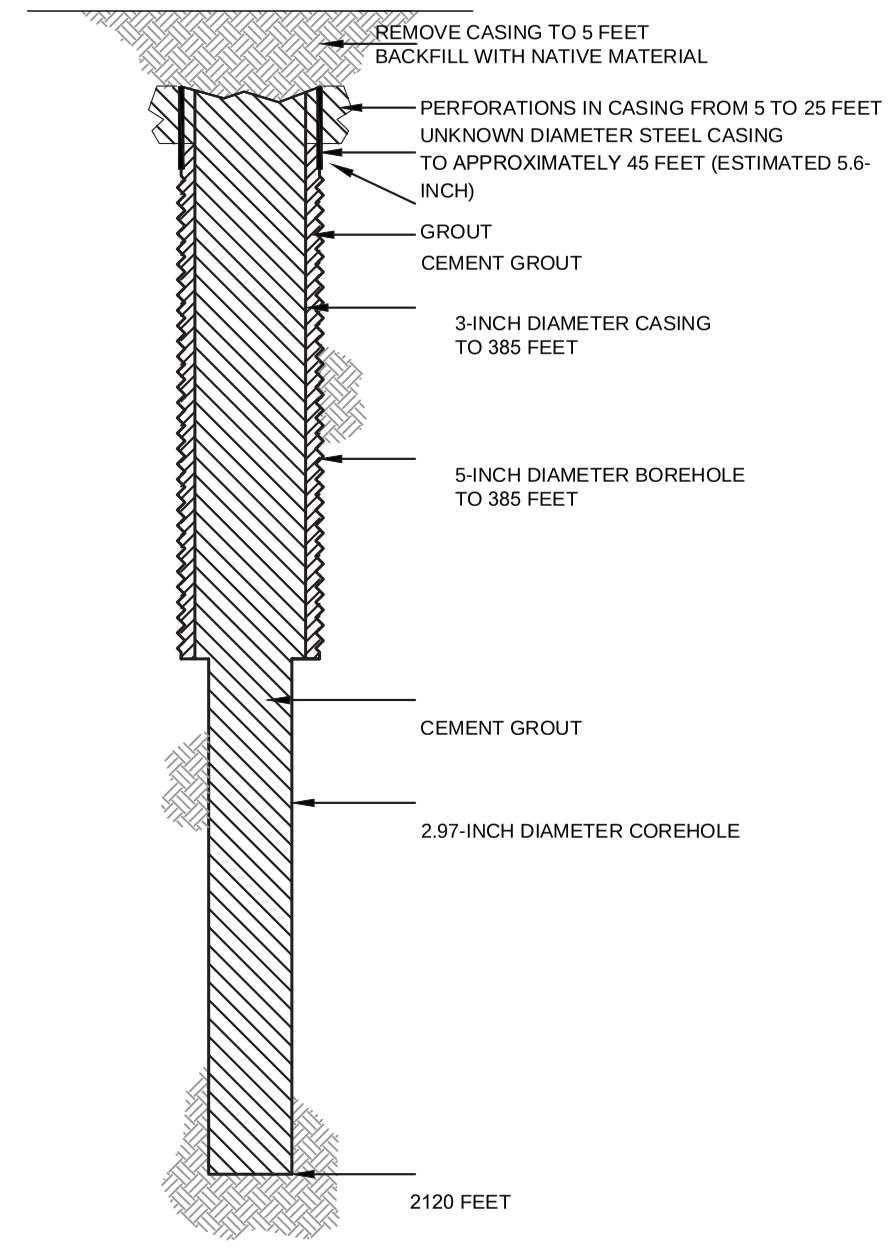

HALEY ALDRICH

FLORENCE COPPER, INC.
FLORENCE, ARIZONA

COREHOLE 60MF DIAGRAM

FLORENCE COPPER INC.

NOT TO SCALE
SEPTEMBER 2019

FIGURE 1

MOBINI, GITA Printed: 4/21/2017 12:00 PM Layout: ABANDON (2)
\PROJECTS\CURIS RESOURCES38706-CURIS FEASIBILITY\DRAWINGS\EPA\WELL ABANDON\415S_ABANDON.DWG

OMB No. 2040-0042 Approval Expires 4/30/2022

United States Environmental Protection Agency

EPA

WELL REWORK RECORD, PLUGGING AND ABANDONMENT PLAN, OR PLUGGING AND ABANDONMENT AFFIDAVIT

Name and Address, Phone Number and/or Email of Permittee

Florence Copper Project
1575 W Hunt Hwy,
Florence, AZ 85132

Permit or EPA ID Number	API Number	Full Well Name
R9UIC-AZ3-FY11-1		62MF

State	County
Arizona	Pinal

Locate well in two directions from nearest lines of quarter section and drilling unit

Latitude 33.04855595

Longitude -111.4281272

Surface Location

SW **1/4 of** SE **1/4 of Section** 28 **Township** 4S **Range** 9E

_____ **ft. from (N/S)** _____ **Line of quarter section**

_____ **ft. from (E/W)** _____ **Line of quarter section.**

Well Class	Timing of Action (pick one)	Type of Action (pick one)
☐ Class I ☐ Class II ☑ Class III ☐ Class V	☑ Notice Prior to Work Date Expected to Commence March 2021 ☐ Report After Work Date Work Ended	☐ Well Rework ☑ Plugging and Abandonment ☐ Conversion to a Non-Injection Well

Provide a narrative description of the work planned to be performed, or that was performed. Use additional pages as necessary. See instructions.

A workover rig capable of performing the required abandonment operations at the required depths will be moved in and set up over the core hole. The core hole will be inspected to determine the depth to which the hole remains open and if any obstructions are present in the core hole; the presence and condition of any existing collar will also be documented. If necessary, the core hole will be cleaned out to a depth of at least 100 feet below the bedrock-LBFU contact to enable placement of cement seals.

If collar is present, an attempt will be made to remove it. If removal of the collar is not feasible, it will be left in the hole and perforated as needed to allow an annular seal to be placed to a depth of at least 25 feet bgs. In areas of agricultural use, the surface casing will be cut at least 5 feet bgs and removed.

If the collar cannot be removed, it will be perforated from at least 20 feet below the bedrock-LBFU contact to at least 20 feet above the contact; from at least 20 feet below the base of the MFGU to at least 20 feet above the top of the MFGU; and from at least 25 feet bgs to 5 feet bgs.

A tremie pipe will be used to place Type V cement in the open core hole from the bottom of the core hole to the top of the core hole. Cement retainers, as described above, will be used to force cement grout into the annulus and behind perforated intervals, as necessary.

If the hole has been obstructed, as much cement as possible will be placed from 100 feet below the LBFU-bedrock contact to the top of the core hole.

The volume of Type V cement will be recorded and will not be less than the estimated volume of material required to fill each interval. All cement grout will consist of Type V cement, or equivalent approved in accordance with the UIC Permit.

Certification

I certify under the penalty of law that I have personally examined and am familiar with the information submitted in this document and all attachments and that, based on my inquiry of those individuals immediately responsible for obtaining the information, I believe that the information is true, accurate, and complete. I am aware that there are significant penalties for submitting false information, including the possibliity of fine and imprisonment. (Ref. 40 CFR § 144.32)

Name and Official Title *(Please type or print)*	Signature	Date Signed
Dan Johnson, VP - General Manager		10/3/2019

INSTRUCTIONS FOR FORM 7520-19

This form replaces forms 7520-12 and 7520-14. Use this form only when work is planned or has occurred that affects the well's construction or operation as an injection well, including work on the casing, tubing or packer (or for shallow Class V wells, the subsurface fluid emplacement network). Use one form per injection well. While reports or other information developed by contractors or service companies may be attached, this form must be signed by a responsible entity as described at 40 CFR 144.32. Note: operators closing Class V wells should use Form 7520-17.

NAME, ADDRESS, PHONE AND/OR EMAIL OF PERMITTEE: Enter the name and street address, city/town, state, and ZIP code of the permittee. Also provide an email address (if available) and/or a phone number.

PERMIT OR EPA ID NUMBER: Enter the well identification number or permit number assigned to the well by the EPA or the permitting authority.

API NUMBER: Enter the number assigned by the local jurisdiction (usually a State Oil and Gas Agency) using the American Petroleum Institute standard numbering system.

FULL WELL NAME: Enter the full name of the well or project.

Enter the **STATE** and **COUNTY** where the well is located. For States that do not have counties, use the name of that State's equivalent jurisdiction at a more local level.

WELL LOCATION: Fill in the complete township, range, and section to the nearest quarter-quarter section. A township is north or south of the baseline, and a range is east or west of the principal meridian (e.g., T12N, R34W). Also include the distance, in feet, from the nearest north or south line and nearest east or west line of the quarter-section. Also, enter the **latitude** and **longitude** of the well in decimal degrees, to five or six places if possible; be sure to include a negative sign for the longitude of a well in the Western Hemisphere and a negative sign for the latitude of a well in the Southern Hemisphere.

Enter the **WELL CLASS,** i.e., the class of injection well as defined in 40 CFR 144.6.

TIMING OF THE ACTION: Check ***Notice prior to work*** if the activity has not yet occurred (i.e., is planned). Check ***Report after work*** if the activity described has already occurred. As appropriate, include the date the activity is expected to start or the date the activity was completed. (Note this may not be available, e.g., for a plugging plan submitted with a permit application.)

TYPE OF ACTION: Check the appropriate box to describe the kind of activity being reported. Check ***Well Rework*** for work that was/will be performed on the well after it has already been in operation as an injection well. Check ***Plugging and Abandonment*** to report on plans for or descriptions of final closure/plugging after use as an injection well. Check ***Conversion to a Non-Injection Well*** if the well is to be converted to something other than an injection well.

Provide a **NARRATIVE DESCRIPTION** of the work planned to be performed, or that was performed. The narrative should include a description of the main procedures planned or that occurred during the work activity. A service company report, daily report, or similar document may be attached if it includes all the requested information and is clear and legible.

For well reworks, include the following information: The reason for the well rework; depths of activity; type of activity; changes to injection well configuration, well casing, or cement behind casing; any plug added to the well and its depth; any newly drilled interval and its depth; method(s) to demonstrate that the well has mechanical integrity (as applicable); and any deviations from the approved rework plan (as applicable).

For a well plugging plan, include the following information: Reason for the well plugging; number of plugs placed, and their depths; materials used as plugs (e.g., cast iron bridge plug, cement, cement retainer); method to set plugs; and wait-on-cement times, if any. Also provide one or more cost estimates from an independent firm in the business of plugging and abandoning wells to plug the well as described in the plan.

For well plugging affidavit, include the following information: Reason for the well plugging; number of plugs placed, and their depths; materials used as plugs (e.g., cast iron bridge plug, cement, cement retainer); method to set plugs; wait-on-cement times, if any; and any deviations from the approved plugging plan (if applicable).

For conversion to a non-injection well, include the following information: Depths of activity; type of activity; changes to injection well configuration, well casing, or cement behind casing; any plug added to the well and its depth; any newly drilled interval and its depth; depths of new perforations; and method(s) to demonstrate that the well has mechanical integrity (as applicable).

For all of the above activities, include a well sketch depicting the work, results of well tests/logging performed, service company tickets, and any other available information demonstrating how the work was/is to be performed. Also, specify whether depths are below ground surface, relative to Kelly bushing, etc.

CERTIFICATION: This form must be signed and dated by either: a responsible corporate officer for a corporation, by a general partner for a partnership, by the proprietor of a sole proprietorship, or by a principal executive or ranking elected official for a public agency.

PAPERWORK REDUCTION ACT NOTICE: The public reporting and recordkeeping burden for this collection of information is estimated to average between 6.0 and 7.9 hours per response, depending on the injection well class. Burden means the total time, effort, or financial resource expended by persons to generate, maintain, retain, or disclose or provide information to or for a Federal Agency. This includes the time needed to review instructions; develop, acquire, install, and utilize technology and systems for the purposes of collecting, validating, and verifying information, processing and maintaining information, and disclosing and providing information; adjust the existing ways to comply with any previously applicable instructions and requirements; train personnel to be able to respond to the collection of information; search data sources; complete and review the collection of information; and, transmit or otherwise disclose the information. An agency may not conduct or sponsor, and a person is not required to respond to, a collection of information unless it displays a currently valid OMB control number. Send comments on the Agency's need for this information, the accuracy of the provided burden estimates, and any suggested methods for minimizing respondent burden, including the use of automated collection techniques to Director, Collection Strategies Division, U.S. Environmental Protection Agency (2822), 1200 Pennsylvania Ave., NW., Washington, D.C. 20460. Include the OMB control number in any correspondence. Do not send the completed forms to this address.

AS-BUILT COREHOLE 62MF

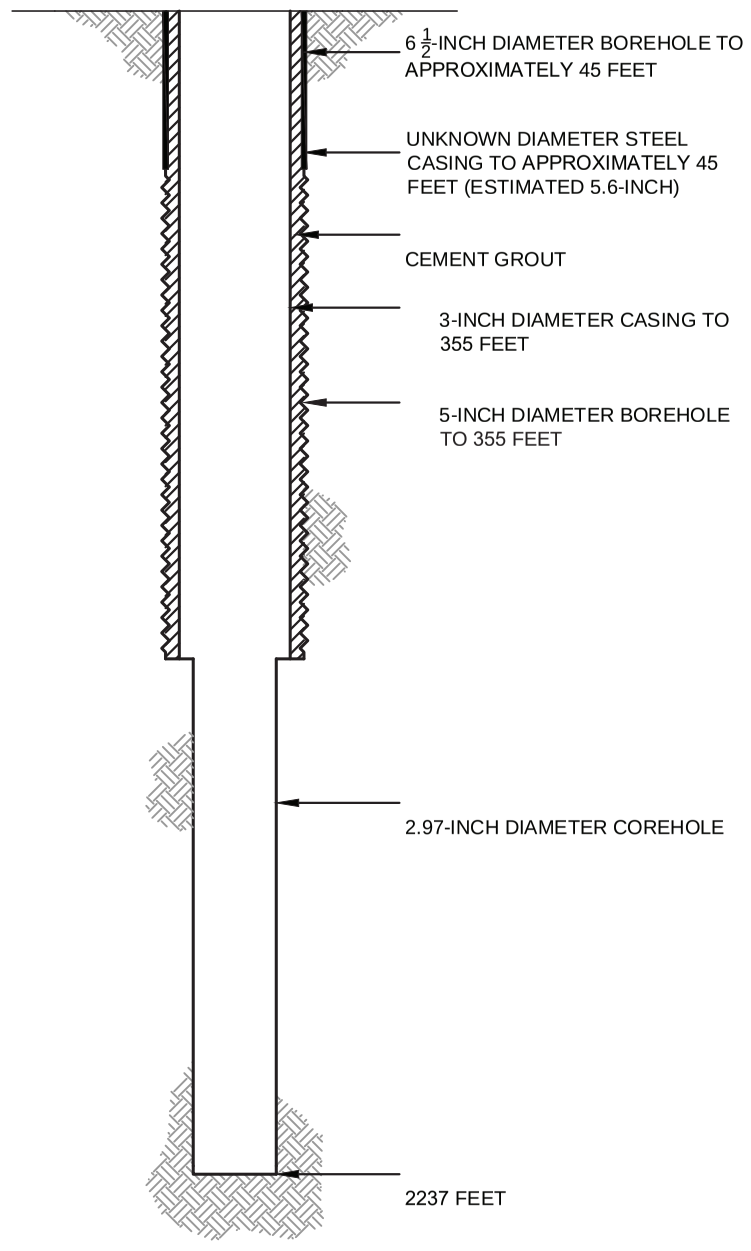

PROPOSED PLUGGING AND ABANDONMENT COREHOLE 62MF

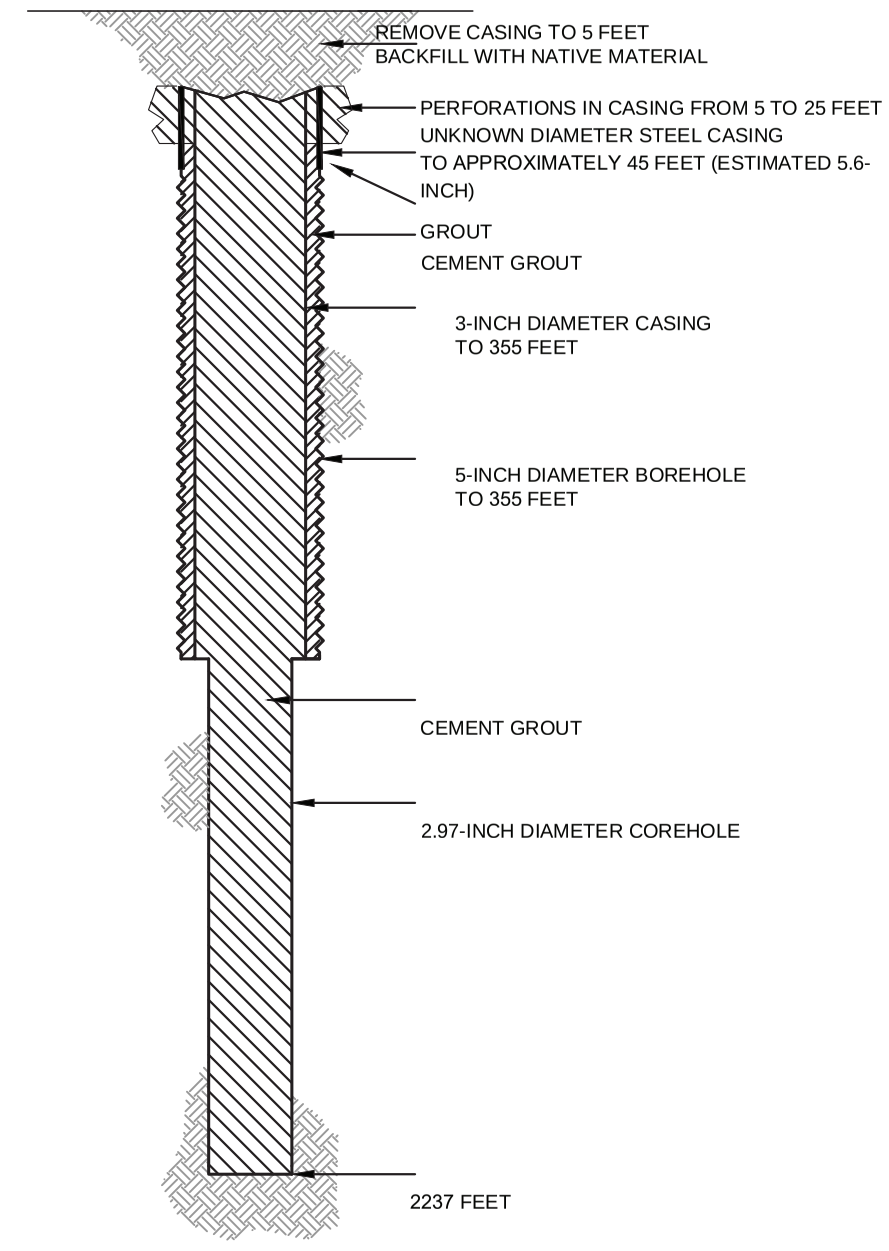

HALEY ALDRICH

FLORENCE COPPER, INC.
FLORENCE, ARIZONA

COREHOLE 62MF DIAGRAM

FLORENCE COPPER INC.

NOT TO SCALE
SEPTEMBER 2019

FIGURE 1

MOBINI, GITA Printed: 4/21/2017 12:00 PM Layout: ABANDON (2)
\PROJECTS\CURIS RESOURCES38706-CURIS FEASIBILITY\DRAWINGS\EPA\WELL ABANDON\415S_ABANDON.DWG

OMB No. 2040-0042 Approval Expires 4/30/2022

United States Environmental Protection Agency

EPA

WELL REWORK RECORD, PLUGGING AND ABANDONMENT PLAN, OR PLUGGING AND ABANDONMENT AFFIDAVIT

Name and Address, Phone Number and/or Email of Permittee

Florence Copper Project
1575 W Hunt Hwy,
Florence, AZ 85132

Permit or EPA ID Number	API Number	Full Well Name
R9UIC-AZ3-FY11-1		67S

State	County
Arizona	Pinal

Locate well in two directions from nearest lines of quarter section and drilling unit

Latitude 33.05000653

Longitude -111.4289355

Surface Location

NW **1/4 of** SE **1/4 of Section** 28 **Township** 4S **Range** 9E

_____ **ft. from (N/S)** _____ **Line of quarter section**

_____ **ft. from (E/W)** _____ **Line of quarter section.**

Well Class	Timing of Action (pick one)	Type of Action (pick one)
☐ Class I ☐ Class II ☑ Class III ☐ Class V	☑ Notice Prior to Work Date Expected to Commence March 2021 ☐ Report After Work Date Work Ended	☐ Well Rework ☑ Plugging and Abandonment ☐ Conversion to a Non-Injection Well

Provide a narrative description of the work planned to be performed, or that was performed. Use additional pages as necessary. See instructions.

A workover rig capable of performing the required abandonment operations at the required depths will be moved in and set up over the core hole. The core hole will be inspected to determine the depth to which the hole remains open and if any obstructions are present in the core hole; the presence and condition of any existing collar will also be documented. If necessary, the core hole will be cleaned out to a depth of at least 100 feet below the bedrock-LBFU contact to enable placement of cement seals.

If collar is present, an attempt will be made to remove it. If removal of the collar is not feasible, it will be left in the hole and perforated as needed to allow an annular seal to be placed to a depth of at least 25 feet bgs. In areas of agricultural use, the surface casing will be cut at least 5 feet bgs and removed.

If the collar cannot be removed, it will be perforated from at least 20 feet below the bedrock-LBFU contact to at least 20 feet above the contact; from at least 20 feet below the base of the MFGU to at least 20 feet above the top of the MFGU; and from at least 25 feet bgs to 5 feet bgs.

A tremie pipe will be used to place Type V cement in the open core hole from the bottom of the core hole to the top of the core hole. Cement retainers, as described above, will be used to force cement grout into the annulus and behind perforated intervals, as necessary.

If the hole has been obstructed, as much cement as possible will be placed from 100 feet below the LBFU-bedrock contact to the top of the core hole.

The volume of Type V cement will be recorded and will not be less than the estimated volume of material required to fill each interval. All cement grout will consist of Type V cement, or equivalent approved in accordance with the UIC Permit.

Certification

I certify under the penalty of law that I have personally examined and am familiar with the information submitted in this document and all attachments and that, based on my inquiry of those individuals immediately responsible for obtaining the information, I believe that the information is true, accurate, and complete. I am aware that there are significant penalties for submitting false information, including the possibliity of fine and imprisonment. (Ref. 40 CFR § 144.32)

Name and Official Title *(Please type or print)*	Signature	Date Signed
Dan Johnson, VP - General Manager		10/3/2019

INSTRUCTIONS FOR FORM 7520-19

This form replaces forms 7520-12 and 7520-14. Use this form only when work is planned or has occurred that affects the well's construction or operation as an injection well, including work on the casing, tubing or packer (or for shallow Class V wells, the subsurface fluid emplacement network). Use one form per injection well. While reports or other information developed by contractors or service companies may be attached, this form must be signed by a responsible entity as described at 40 CFR 144.32. Note: operators closing Class V wells should use Form 7520-17.

NAME, ADDRESS, PHONE AND/OR EMAIL OF PERMITTEE: Enter the name and street address, city/town, state, and ZIP code of the permittee. Also provide an email address (if available) and/or a phone number.

PERMIT OR EPA ID NUMBER: Enter the well identification number or permit number assigned to the well by the EPA or the permitting authority.

API NUMBER: Enter the number assigned by the local jurisdiction (usually a State Oil and Gas Agency) using the American Petroleum Institute standard numbering system.

FULL WELL NAME: Enter the full name of the well or project.

Enter the **STATE** and **COUNTY** where the well is located. For States that do not have counties, use the name of that State's equivalent jurisdiction at a more local level.

WELL LOCATION: Fill in the complete township, range, and section to the nearest quarter-quarter section. A township is north or south of the baseline, and a range is east or west of the principal meridian (e.g., T12N, R34W). Also include the distance, in feet, from the nearest north or south line and nearest east or west line of the quarter-section. Also, enter the **latitude** and **longitude** of the well in decimal degrees, to five or six places if possible; be sure to include a negative sign for the longitude of a well in the Western Hemisphere and a negative sign for the latitude of a well in the Southern Hemisphere.

Enter the **WELL CLASS,** i.e., the class of injection well as defined in 40 CFR 144.6.

TIMING OF THE ACTION: Check ***Notice prior to work*** if the activity has not yet occurred (i.e., is planned). Check ***Report after work*** if the activity described has already occurred. As appropriate, include the date the activity is expected to start or the date the activity was completed. (Note this may not be available, e.g., for a plugging plan submitted with a permit application.)

TYPE OF ACTION: Check the appropriate box to describe the kind of activity being reported. Check ***Well Rework*** for work that was/will be performed on the well after it has already been in operation as an injection well. Check ***Plugging and Abandonment*** to report on plans for or descriptions of final closure/plugging after use as an injection well. Check ***Conversion to a Non-Injection Well*** if the well is to be converted to something other than an injection well.

Provide a **NARRATIVE DESCRIPTION** of the work planned to be performed, or that was performed. The narrative should include a description of the main procedures planned or that occurred during the work activity. A service company report, daily report, or similar document may be attached if it includes all the requested information and is clear and legible.

For well reworks, include the following information: The reason for the well rework; depths of activity; type of activity; changes to injection well configuration, well casing, or cement behind casing; any plug added to the well and its depth; any newly drilled interval and its depth; method(s) to demonstrate that the well has mechanical integrity (as applicable); and any deviations from the approved rework plan (as applicable).

For a well plugging plan, include the following information: Reason for the well plugging; number of plugs placed, and their depths; materials used as plugs (e.g., cast iron bridge plug, cement, cement retainer); method to set plugs; and wait-on-cement times, if any. Also provide one or more cost estimates from an independent firm in the business of plugging and abandoning wells to plug the well as described in the plan.

For well plugging affidavit, include the following information: Reason for the well plugging; number of plugs placed, and their depths; materials used as plugs (e.g., cast iron bridge plug, cement, cement retainer); method to set plugs; wait-on-cement times, if any; and any deviations from the approved plugging plan (if applicable).

For conversion to a non-injection well, include the following information: Depths of activity; type of activity; changes to injection well configuration, well casing, or cement behind casing; any plug added to the well and its depth; any newly drilled interval and its depth; depths of new perforations; and method(s) to demonstrate that the well has mechanical integrity (as applicable).

For all of the above activities, include a well sketch depicting the work, results of well tests/logging performed, service company tickets, and any other available information demonstrating how the work was/is to be performed. Also, specify whether depths are below ground surface, relative to Kelly bushing, etc.

CERTIFICATION: This form must be signed and dated by either: a responsible corporate officer for a corporation, by a general partner for a partnership, by the proprietor of a sole proprietorship, or by a principal executive or ranking elected official for a public agency.

PAPERWORK REDUCTION ACT NOTICE: The public reporting and recordkeeping burden for this collection of information is estimated to average between 6.0 and 7.9 hours per response, depending on the injection well class. Burden means the total time, effort, or financial resource expended by persons to generate, maintain, retain, or disclose or provide information to or for a Federal Agency. This includes the time needed to review instructions; develop, acquire, install, and utilize technology and systems for the purposes of collecting, validating, and verifying information, processing and maintaining information, and disclosing and providing information; adjust the existing ways to comply with any previously applicable instructions and requirements; train personnel to be able to respond to the collection of information; search data sources; complete and review the collection of information; and, transmit or otherwise disclose the information. An agency may not conduct or sponsor, and a person is not required to respond to, a collection of information unless it displays a currently valid OMB control number. Send comments on the Agency's need for this information, the accuracy of the provided burden estimates, and any suggested methods for minimizing respondent burden, including the use of automated collection techniques to Director, Collection Strategies Division, U.S. Environmental Protection Agency (2822), 1200 Pennsylvania Ave., NW., Washington, D.C. 20460. Include the OMB control number in any correspondence. Do not send the completed forms to this address.

AS-BUILT COREHOLE 67S

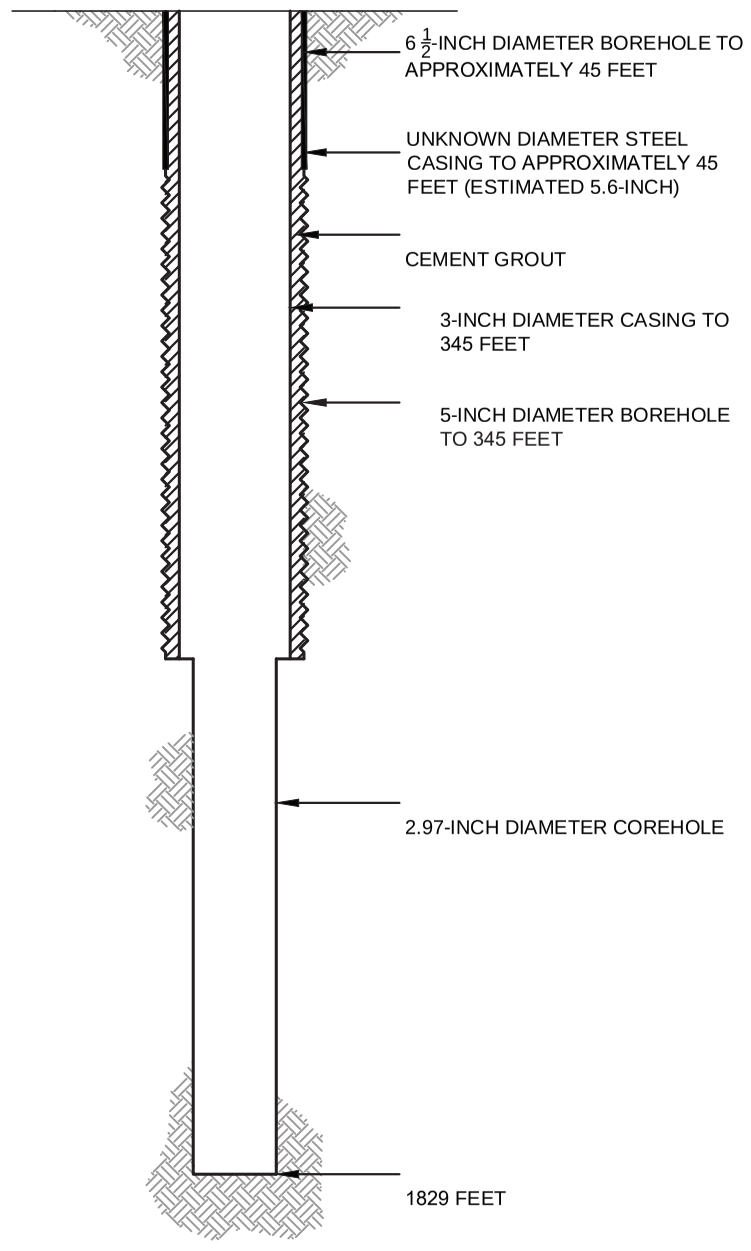

PROPOSED PLUGGING AND ABANDONMENT COREHOLE 67S

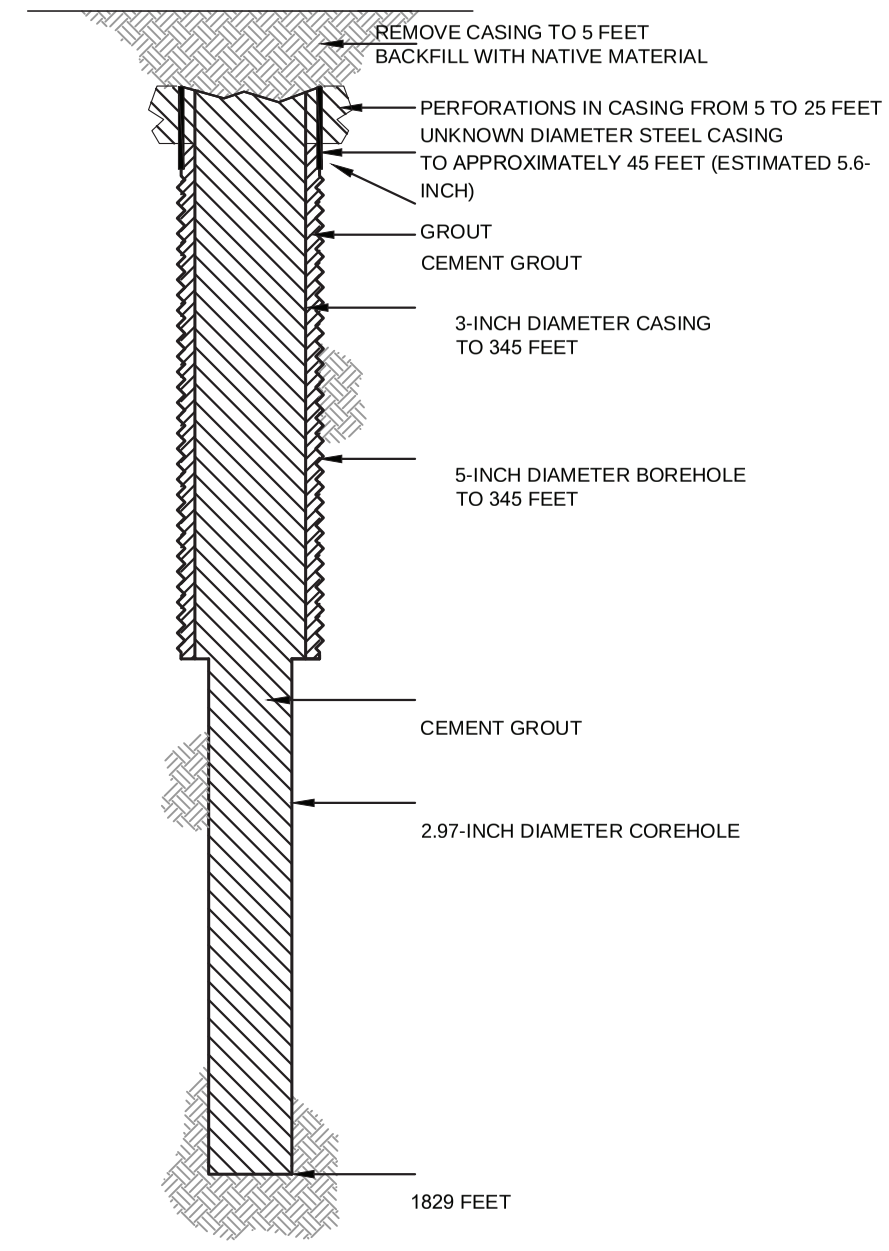

HALEY ALDRICH

FLORENCE COPPER, INC.
FLORENCE, ARIZONA

COREHOLE 67S DIAGRAM

FLORENCE COPPER INC.

NOT TO SCALE
SEPTEMBER 2019

FIGURE 1

MOBINI, GITA Printed: 4/21/2017 12:00 PM Layout: ABANDON (2)
\PROJECTS\CURIS RESOURCES38706-CURIS FEASIBILITY\DRAWINGS\EPA\WELL ABANDON\415S_ABANDON.DWG

OMB No. 2040-0042 Approval Expires 4/30/2022

United States Environmental Protection Agency

EPA

WELL REWORK RECORD, PLUGGING AND ABANDONMENT PLAN, OR PLUGGING AND ABANDONMENT AFFIDAVIT

Name and Address, Phone Number and/or Email of Permittee

Florence Copper Project
1575 W Hunt Hwy,
Florence, AZ 85132

Permit or EPA ID Number	API Number	Full Well Name
R9UIC-AZ3-FY11-1		68MF

State	County
Arizona	Pinal

Locate well in two directions from nearest lines of quarter section and drilling unit

Latitude 33.04619785

Longitude -111.4281119

Surface Location

SW **1/4 of** SE **1/4 of Section** 28 **Township** 4S **Range** 9E

_____ **ft. from (N/S)** _____ **Line of quarter section**

_____ **ft. from (E/W)** _____ **Line of quarter section.**

Well Class	Timing of Action (pick one)	Type of Action (pick one)
☐ Class I ☐ Class II ☑ Class III ☐ Class V	☑ Notice Prior to Work Date Expected to Commence March 2021 ☐ Report After Work Date Work Ended	☐ Well Rework ☑ Plugging and Abandonment ☐ Conversion to a Non-Injection Well

Provide a narrative description of the work planned to be performed, or that was performed. Use additional pages as necessary. See instructions.

A workover rig capable of performing the required abandonment operations at the required depths will be moved in and set up over the core hole. The core hole will be inspected to determine the depth to which the hole remains open and if any obstructions are present in the core hole; the presence and condition of any existing collar will also be documented. If necessary, the core hole will be cleaned out to a depth of at least 100 feet below the bedrock-LBFU contact to enable placement of cement seals.

If collar is present, an attempt will be made to remove it. If removal of the collar is not feasible, it will be left in the hole and perforated as needed to allow an annular seal to be placed to a depth of at least 25 feet bgs. In areas of agricultural use, the surface casing will be cut at least 5 feet bgs and removed.

If the collar cannot be removed, it will be perforated from at least 20 feet below the bedrock-LBFU contact to at least 20 feet above the contact; from at least 20 feet below the base of the MFGU to at least 20 feet above the top of the MFGU; and from at least 25 feet bgs to 5 feet bgs.

A tremie pipe will be used to place Type V cement in the open core hole from the bottom of the core hole to the top of the core hole. Cement retainers, as described above, will be used to force cement grout into the annulus and behind perforated intervals, as necessary.

If the hole has been obstructed, as much cement as possible will be placed from 100 feet below the LBFU-bedrock contact to the top of the core hole.

The volume of Type V cement will be recorded and will not be less than the estimated volume of material required to fill each interval. All cement grout will consist of Type V cement, or equivalent approved in accordance with the UIC Permit.

Certification

I certify under the penalty of law that I have personally examined and am familiar with the information submitted in this document and all attachments and that, based on my inquiry of those individuals immediately responsible for obtaining the information, I believe that the information is true, accurate, and complete. I am aware that there are significant penalties for submitting false information, including the possibliity of fine and imprisonment. (Ref. 40 CFR § 144.32)

Name and Official Title *(Please type or print)*	Signature	Date Signed
Dan Johnson, VP - General Manager		10/3/2019

INSTRUCTIONS FOR FORM 7520-19

This form replaces forms 7520-12 and 7520-14. Use this form only when work is planned or has occurred that affects the well's construction or operation as an injection well, including work on the casing, tubing or packer (or for shallow Class V wells, the subsurface fluid emplacement network). Use one form per injection well. While reports or other information developed by contractors or service companies may be attached, this form must be signed by a responsible entity as described at 40 CFR 144.32. Note: operators closing Class V wells should use Form 7520-17.

NAME, ADDRESS, PHONE AND/OR EMAIL OF PERMITTEE: Enter the name and street address, city/town, state, and ZIP code of the permittee. Also provide an email address (if available) and/or a phone number.

PERMIT OR EPA ID NUMBER: Enter the well identification number or permit number assigned to the well by the EPA or the permitting authority.

API NUMBER: Enter the number assigned by the local jurisdiction (usually a State Oil and Gas Agency) using the American Petroleum Institute standard numbering system.

FULL WELL NAME: Enter the full name of the well or project.

Enter the **STATE** and **COUNTY** where the well is located. For States that do not have counties, use the name of that State's equivalent jurisdiction at a more local level.

WELL LOCATION: Fill in the complete township, range, and section to the nearest quarter-quarter section. A township is north or south of the baseline, and a range is east or west of the principal meridian (e.g., T12N, R34W). Also include the distance, in feet, from the nearest north or south line and nearest east or west line of the quarter-section. Also, enter the **latitude** and **longitude** of the well in decimal degrees, to five or six places if possible; be sure to include a negative sign for the longitude of a well in the Western Hemisphere and a negative sign for the latitude of a well in the Southern Hemisphere.

Enter the **WELL CLASS,** i.e., the class of injection well as defined in 40 CFR 144.6.

TIMING OF THE ACTION: Check ***Notice prior to work*** if the activity has not yet occurred (i.e., is planned). Check ***Report after work*** if the activity described has already occurred. As appropriate, include the date the activity is expected to start or the date the activity was completed. (Note this may not be available, e.g., for a plugging plan submitted with a permit application.)

TYPE OF ACTION: Check the appropriate box to describe the kind of activity being reported. Check ***Well Rework*** for work that was/will be performed on the well after it has already been in operation as an injection well. Check ***Plugging and Abandonment*** to report on plans for or descriptions of final closure/plugging after use as an injection well. Check ***Conversion to a Non-Injection Well*** if the well is to be converted to something other than an injection well.

Provide a **NARRATIVE DESCRIPTION** of the work planned to be performed, or that was performed. The narrative should include a description of the main procedures planned or that occurred during the work activity. A service company report, daily report, or similar document may be attached if it includes all the requested information and is clear and legible.

For well reworks, include the following information: The reason for the well rework; depths of activity; type of activity; changes to injection well configuration, well casing, or cement behind casing; any plug added to the well and its depth; any newly drilled interval and its depth; method(s) to demonstrate that the well has mechanical integrity (as applicable); and any deviations from the approved rework plan (as applicable).

For a well plugging plan, include the following information: Reason for the well plugging; number of plugs placed, and their depths; materials used as plugs (e.g., cast iron bridge plug, cement, cement retainer); method to set plugs; and wait-on-cement times, if any. Also provide one or more cost estimates from an independent firm in the business of plugging and abandoning wells to plug the well as described in the plan.

For well plugging affidavit, include the following information: Reason for the well plugging; number of plugs placed, and their depths; materials used as plugs (e.g., cast iron bridge plug, cement, cement retainer); method to set plugs; wait-on-cement times, if any; and any deviations from the approved plugging plan (if applicable).

For conversion to a non-injection well, include the following information: Depths of activity; type of activity; changes to injection well configuration, well casing, or cement behind casing; any plug added to the well and its depth; any newly drilled interval and its depth; depths of new perforations; and method(s) to demonstrate that the well has mechanical integrity (as applicable).

For all of the above activities, include a well sketch depicting the work, results of well tests/logging performed, service company tickets, and any other available information demonstrating how the work was/is to be performed. Also, specify whether depths are below ground surface, relative to Kelly bushing, etc.

CERTIFICATION: This form must be signed and dated by either: a responsible corporate officer for a corporation, by a general partner for a partnership, by the proprietor of a sole proprietorship, or by a principal executive or ranking elected official for a public agency.

PAPERWORK REDUCTION ACT NOTICE: The public reporting and recordkeeping burden for this collection of information is estimated to average between 6.0 and 7.9 hours per response, depending on the injection well class. Burden means the total time, effort, or financial resource expended by persons to generate, maintain, retain, or disclose or provide information to or for a Federal Agency. This includes the time needed to review instructions; develop, acquire, install, and utilize technology and systems for the purposes of collecting, validating, and verifying information, processing and maintaining information, and disclosing and providing information; adjust the existing ways to comply with any previously applicable instructions and requirements; train personnel to be able to respond to the collection of information; search data sources; complete and review the collection of information; and, transmit or otherwise disclose the information. An agency may not conduct or sponsor, and a person is not required to respond to, a collection of information unless it displays a currently valid OMB control number. Send comments on the Agency's need for this information, the accuracy of the provided burden estimates, and any suggested methods for minimizing respondent burden, including the use of automated collection techniques to Director, Collection Strategies Division, U.S. Environmental Protection Agency (2822), 1200 Pennsylvania Ave., NW., Washington, D.C. 20460. Include the OMB control number in any correspondence. Do not send the completed forms to this address.

AS-BUILT COREHOLE 68MF

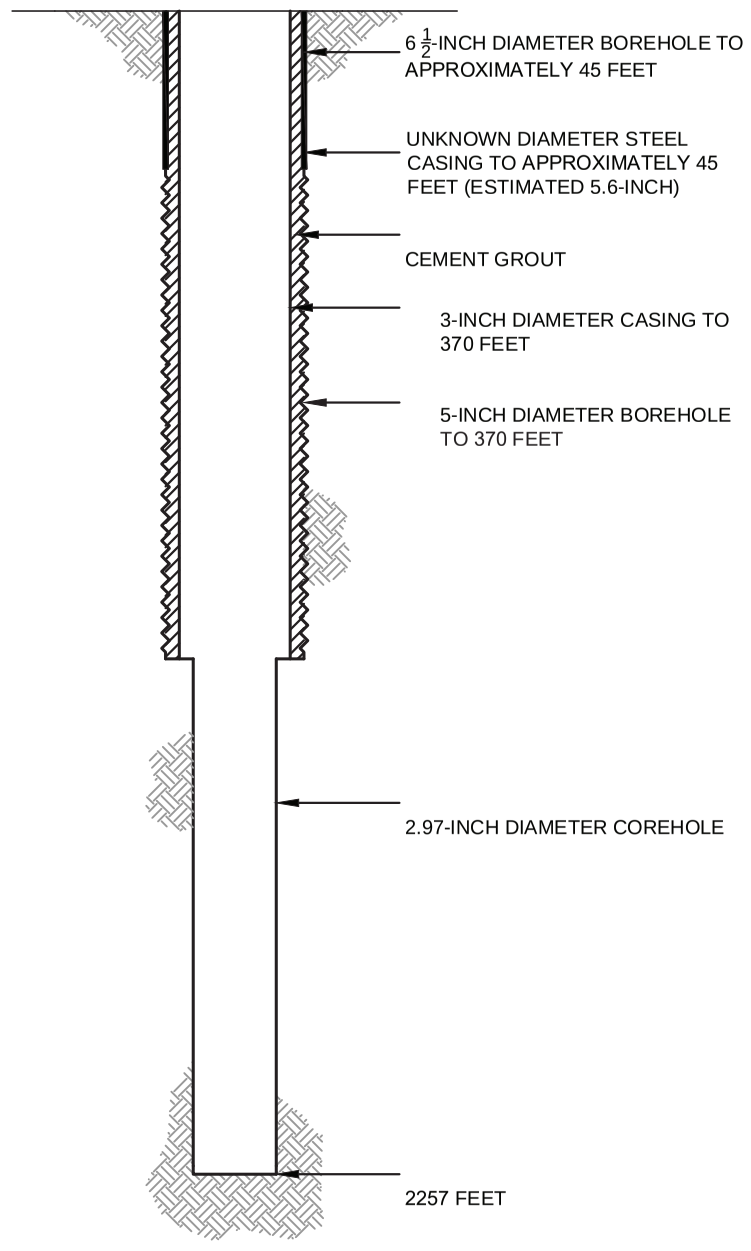

PROPOSED PLUGGING AND ABANDONMENT COREHOLE 68MF

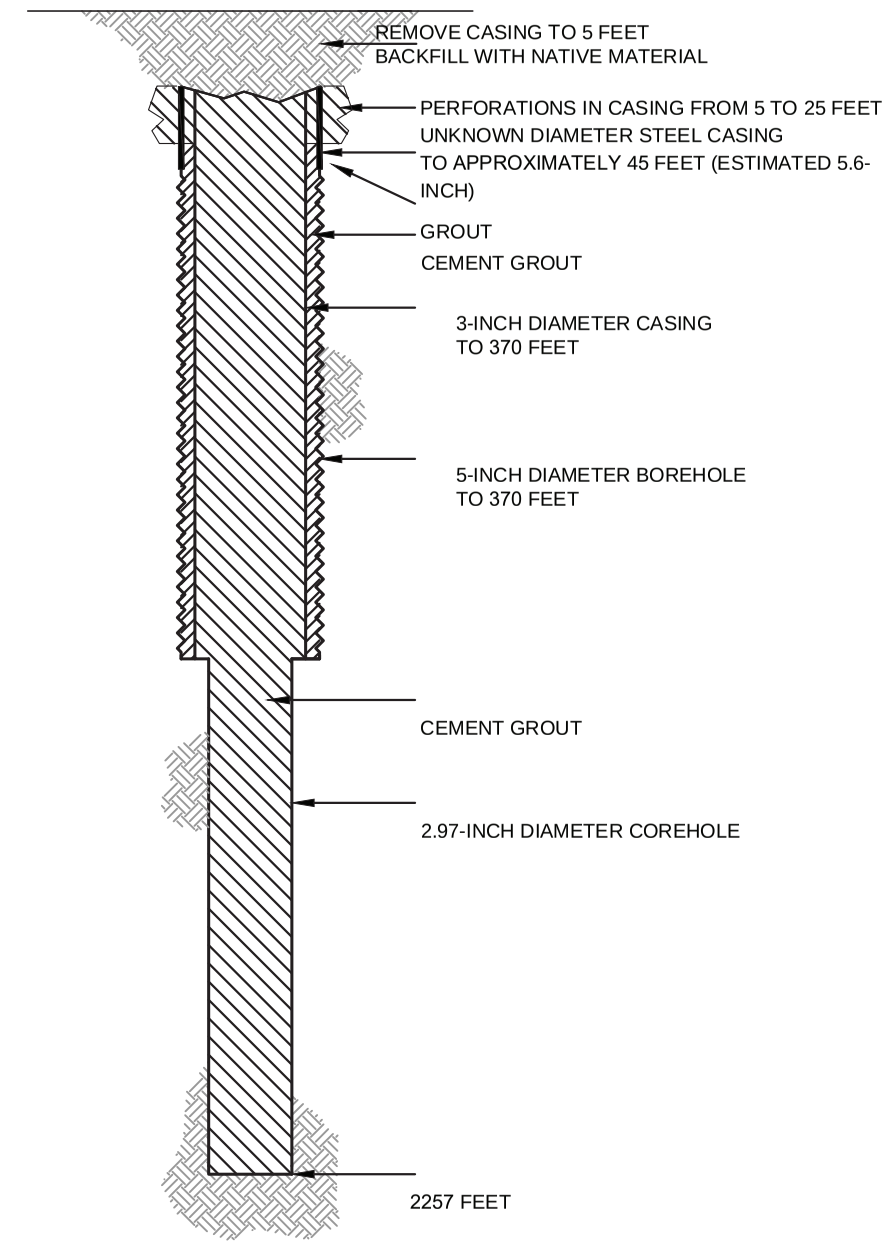

HALEY ALDRICH

FLORENCE COPPER, INC.
FLORENCE, ARIZONA

COREHOLE 68MF DIAGRAM

FLORENCE COPPER INC.

NOT TO SCALE
SEPTEMBER 2019

FIGURE 1

MOBINI, GITA Printed: 4/21/2017 12:00 PM Layout: ABANDON (2)
\PROJECTS\CURIS RESOURCES38706-CURIS FEASIBILITY\DRAWINGS\EPA\WELL ABANDON\415S_ABANDON.DWG

OMB No. 2040-0042 Approval Expires 4/30/2022

United States Environmental Protection Agency

EPA

WELL REWORK RECORD, PLUGGING AND ABANDONMENT PLAN, OR PLUGGING AND ABANDONMENT AFFIDAVIT

Name and Address, Phone Number and/or Email of Permittee

Florence Copper Project
1575 W Hunt Hwy,
Florence, AZ 85132

Permit or EPA ID Number	API Number	Full Well Name
R9UIC-AZ3-FY11-1		69MF

State	County
Arizona	Pinal

Locate well in two directions from nearest lines of quarter section and drilling unit

Surface Location

SE 1/4 of SE 1/4 of Section 28 Township 4S Range 9E

Latitude 33.04614584

Longitude -111.4248778

ft. from (N/S) Line of quarter section

ft. from (E/W) Line of quarter section.

Well Class	Timing of Action (pick one)	Type of Action (pick one)
☐ Class I ☐ Class II ☑ Class III ☐ Class V	☑ Notice Prior to Work Date Expected to Commence March 2021 ☐ Report After Work Date Work Ended	☐ Well Rework ☑ Plugging and Abandonment ☐ Conversion to a Non-Injection Well

Provide a narrative description of the work planned to be performed, or that was performed. Use additional pages as necessary. See instructions.

A workover rig capable of performing the required abandonment operations at the required depths will be moved in and set up over the core hole. The core hole will be inspected to determine the depth to which the hole remains open and if any obstructions are present in the core hole; the presence and condition of any existing collar will also be documented. If necessary, the core hole will be cleaned out to a depth of at least 100 feet below the bedrock-LBFU contact to enable placement of cement seals.

If collar is present, an attempt will be made to remove it. If removal of the collar is not feasible, it will be left in the hole and perforated as needed to allow an annular seal to be placed to a depth of at least 25 feet bgs. In areas of agricultural use, the surface casing will be cut at least 5 feet bgs and removed.

If the collar cannot be removed, it will be perforated from at least 20 feet below the bedrock-LBFU contact to at least 20 feet above the contact; from at least 20 feet below the base of the MFGU to at least 20 feet above the top of the MFGU; and from at least 25 feet bgs to 5 feet bgs.

A tremie pipe will be used to place Type V cement in the open core hole from the bottom of the core hole to the top of the core hole. Cement retainers, as described above, will be used to force cement grout into the annulus and behind perforated intervals, as necessary.

If the hole has been obstructed, as much cement as possible will be placed from 100 feet below the LBFU-bedrock contact to the top of the core hole.

The volume of Type V cement will be recorded and will not be less than the estimated volume of material required to fill each interval. All cement grout will consist of Type V cement, or equivalent approved in accordance with the UIC Permit.

Certification

I certify under the penalty of law that I have personally examined and am familiar with the information submitted in this document and all attachments and that, based on my inquiry of those individuals immediately responsible for obtaining the information, I believe that the information is true, accurate, and complete. I am aware that there are significant penalties for submitting false information, including the possibliity of fine and imprisonment. (Ref. 40 CFR § 144.32)

Name and Official Title *(Please type or print)*	Signature	Date Signed
Dan Johnson, VP - General Manager		10/3/2019

INSTRUCTIONS FOR FORM 7520-19

This form replaces forms 7520-12 and 7520-14. Use this form only when work is planned or has occurred that affects the well's construction or operation as an injection well, including work on the casing, tubing or packer (or for shallow Class V wells, the subsurface fluid emplacement network). Use one form per injection well. While reports or other information developed by contractors or service companies may be attached, this form must be signed by a responsible entity as described at 40 CFR 144.32. Note: operators closing Class V wells should use Form 7520-17.

NAME, ADDRESS, PHONE AND/OR EMAIL OF PERMITTEE: Enter the name and street address, city/town, state, and ZIP code of the permittee. Also provide an email address (if available) and/or a phone number.

PERMIT OR EPA ID NUMBER: Enter the well identification number or permit number assigned to the well by the EPA or the permitting authority.

API NUMBER: Enter the number assigned by the local jurisdiction (usually a State Oil and Gas Agency) using the American Petroleum Institute standard numbering system.

FULL WELL NAME: Enter the full name of the well or project.

Enter the **STATE** and **COUNTY** where the well is located. For States that do not have counties, use the name of that State's equivalent jurisdiction at a more local level.

WELL LOCATION: Fill in the complete township, range, and section to the nearest quarter-quarter section. A township is north or south of the baseline, and a range is east or west of the principal meridian (e.g., T12N, R34W). Also include the distance, in feet, from the nearest north or south line and nearest east or west line of the quarter-section. Also, enter the **latitude** and **longitude** of the well in decimal degrees, to five or six places if possible; be sure to include a negative sign for the longitude of a well in the Western Hemisphere and a negative sign for the latitude of a well in the Southern Hemisphere.

Enter the **WELL CLASS,** i.e., the class of injection well as defined in 40 CFR 144.6.

TIMING OF THE ACTION: Check ***Notice prior to work*** if the activity has not yet occurred (i.e., is planned). Check ***Report after work*** if the activity described has already occurred. As appropriate, include the date the activity is expected to start or the date the activity was completed. (Note this may not be available, e.g., for a plugging plan submitted with a permit application.)

TYPE OF ACTION: Check the appropriate box to describe the kind of activity being reported. Check ***Well Rework*** for work that was/will be performed on the well after it has already been in operation as an injection well. Check ***Plugging and Abandonment*** to report on plans for or descriptions of final closure/plugging after use as an injection well. Check ***Conversion to a Non-Injection Well*** if the well is to be converted to something other than an injection well.

Provide a **NARRATIVE DESCRIPTION** of the work planned to be performed, or that was performed. The narrative should include a description of the main procedures planned or that occurred during the work activity. A service company report, daily report, or similar document may be attached if it includes all the requested information and is clear and legible.

For well reworks, include the following information: The reason for the well rework; depths of activity; type of activity; changes to injection well configuration, well casing, or cement behind casing; any plug added to the well and its depth; any newly drilled interval and its depth; method(s) to demonstrate that the well has mechanical integrity (as applicable); and any deviations from the approved rework plan (as applicable).

For a well plugging plan, include the following information: Reason for the well plugging; number of plugs placed, and their depths; materials used as plugs (e.g., cast iron bridge plug, cement, cement retainer); method to set plugs; and wait-on-cement times, if any. Also provide one or more cost estimates from an independent firm in the business of plugging and abandoning wells to plug the well as described in the plan.

For well plugging affidavit, include the following information: Reason for the well plugging; number of plugs placed, and their depths; materials used as plugs (e.g., cast iron bridge plug, cement, cement retainer); method to set plugs; wait-on-cement times, if any; and any deviations from the approved plugging plan (if applicable).

For conversion to a non-injection well, include the following information: Depths of activity; type of activity; changes to injection well configuration, well casing, or cement behind casing; any plug added to the well and its depth; any newly drilled interval and its depth; depths of new perforations; and method(s) to demonstrate that the well has mechanical integrity (as applicable).

For all of the above activities, include a well sketch depicting the work, results of well tests/logging performed, service company tickets, and any other available information demonstrating how the work was/is to be performed. Also, specify whether depths are below ground surface, relative to Kelly bushing, etc.

CERTIFICATION: This form must be signed and dated by either: a responsible corporate officer for a corporation, by a general partner for a partnership, by the proprietor of a sole proprietorship, or by a principal executive or ranking elected official for a public agency.

PAPERWORK REDUCTION ACT NOTICE: The public reporting and recordkeeping burden for this collection of information is estimated to average between 6.0 and 7.9 hours per response, depending on the injection well class. Burden means the total time, effort, or financial resource expended by persons to generate, maintain, retain, or disclose or provide information to or for a Federal Agency. This includes the time needed to review instructions; develop, acquire, install, and utilize technology and systems for the purposes of collecting, validating, and verifying information, processing and maintaining information, and disclosing and providing information; adjust the existing ways to comply with any previously applicable instructions and requirements; train personnel to be able to respond to the collection of information; search data sources; complete and review the collection of information; and, transmit or otherwise disclose the information. An agency may not conduct or sponsor, and a person is not required to respond to, a collection of information unless it displays a currently valid OMB control number. Send comments on the Agency's need for this information, the accuracy of the provided burden estimates, and any suggested methods for minimizing respondent burden, including the use of automated collection techniques to Director, Collection Strategies Division, U.S. Environmental Protection Agency (2822), 1200 Pennsylvania Ave., NW., Washington, D.C. 20460. Include the OMB control number in any correspondence. Do not send the completed forms to this address.

AS-BUILT COREHOLE 69MF

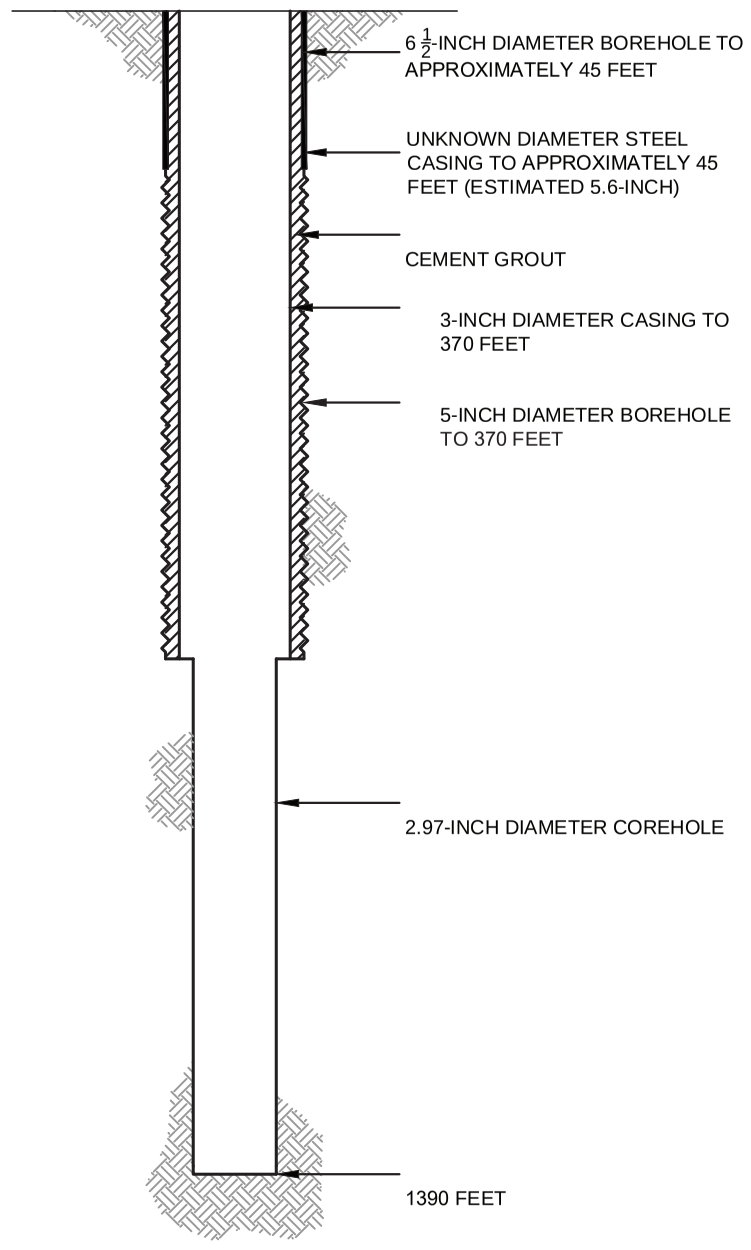

PROPOSED PLUGGING AND ABANDONMENT COREHOLE 69MF

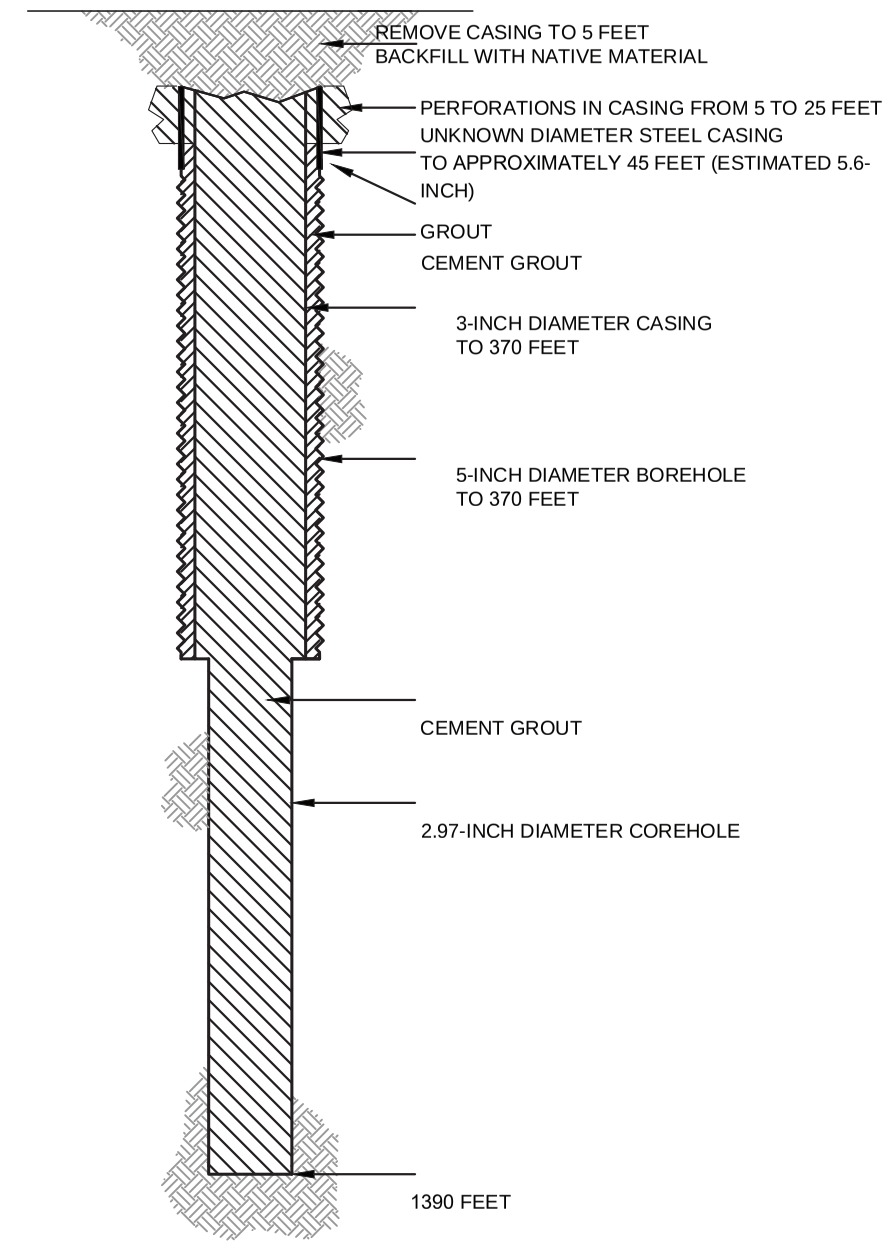

HALEY ALDRICH

FLORENCE COPPER, INC.
FLORENCE, ARIZONA

COREHOLE 69MF DIAGRAM

FLORENCE COPPER INC.

NOT TO SCALE
SEPTEMBER 2019

FIGURE 1

MOBINI, GITA Printed: 4/21/2017 12:00 PM Layout: ABANDON (2)
\PROJECTS\CURIS RESOURCES38706-CURIS FEASIBILITY\DRAWINGS\EPA\WELL ABANDON\415S_ABANDON.DWG

OMB No. 2040-0042 Approval Expires 4/30/2022

United States Environmental Protection Agency

WELL REWORK RECORD, PLUGGING AND ABANDONMENT PLAN, OR PLUGGING AND ABANDONMENT AFFIDAVIT

Name and Address, Phone Number and/or Email of Permittee

Florence Copper Project
1575 W Hunt Hwy,
Florence, AZ 85132

Permit or EPA ID Number	API Number	Full Well Name
R9UIC-AZ3-FY11-1		70MF

State	County
Arizona	Pinal

Locate well in two directions from nearest lines of quarter section and drilling unit

Surface Location

SE 1/4 of SE 1/4 of Section 28 Township 4S Range 9E

Latitude 33.04853383

Longitude -111.4248762

ft. from (N/S) Line of quarter section

ft. from (E/W) Line of quarter section.

Well Class	Timing of Action (pick one)	Type of Action (pick one)
☐ Class I ☐ Class II ☑ Class III ☐ Class V	☑ Notice Prior to Work Date Expected to Commence March 2021 ☐ Report After Work Date Work Ended	☐ Well Rework ☑ Plugging and Abandonment ☐ Conversion to a Non-Injection Well

Provide a narrative description of the work planned to be performed, or that was performed. Use additional pages as necessary. See instructions.

A workover rig capable of performing the required abandonment operations at the required depths will be moved in and set up over the core hole. The core hole will be inspected to determine the depth to which the hole remains open and if any obstructions are present in the core hole; the presence and condition of any existing collar will also be documented. If necessary, the core hole will be cleaned out to a depth of at least 100 feet below the bedrock-LBFU contact to enable placement of cement seals.

If collar is present, an attempt will be made to remove it. If removal of the collar is not feasible, it will be left in the hole and perforated as needed to allow an annular seal to be placed to a depth of at least 25 feet bgs. In areas of agricultural use, the surface casing will be cut at least 5 feet bgs and removed.

If the collar cannot be removed, it will be perforated from at least 20 feet below the bedrock-LBFU contact to at least 20 feet above the contact; from at least 20 feet below the base of the MFGU to at least 20 feet above the top of the MFGU; and from at least 25 feet bgs to 5 feet bgs.

A tremie pipe will be used to place Type V cement in the open core hole from the bottom of the core hole to the top of the core hole. Cement retainers, as described above, will be used to force cement grout into the annulus and behind perforated intervals, as necessary.

If the hole has been obstructed, as much cement as possible will be placed from 100 feet below the LBFU-bedrock contact to the top of the core hole.

The volume of Type V cement will be recorded and will not be less than the estimated volume of material required to fill each interval. All cement grout will consist of Type V cement, or equivalent approved in accordance with the UIC Permit.

Certification

I certify under the penalty of law that I have personally examined and am familiar with the information submitted in this document and all attachments and that, based on my inquiry of those individuals immediately responsible for obtaining the information, I believe that the information is true, accurate, and complete. I am aware that there are significant penalties for submitting false information, including the possibliity of fine and imprisonment. (Ref. 40 CFR § 144.32)

Name and Official Title *(Please type or print)*	Signature	Date Signed
Dan Johnson, VP - General Manager		10/3/2019

INSTRUCTIONS FOR FORM 7520-19

This form replaces forms 7520-12 and 7520-14. Use this form only when work is planned or has occurred that affects the well's construction or operation as an injection well, including work on the casing, tubing or packer (or for shallow Class V wells, the subsurface fluid emplacement network). Use one form per injection well. While reports or other information developed by contractors or service companies may be attached, this form must be signed by a responsible entity as described at 40 CFR 144.32. Note: operators closing Class V wells should use Form 7520-17.

NAME, ADDRESS, PHONE AND/OR EMAIL OF PERMITTEE: Enter the name and street address, city/town, state, and ZIP code of the permittee. Also provide an email address (if available) and/or a phone number.

PERMIT OR EPA ID NUMBER: Enter the well identification number or permit number assigned to the well by the EPA or the permitting authority.

API NUMBER: Enter the number assigned by the local jurisdiction (usually a State Oil and Gas Agency) using the American Petroleum Institute standard numbering system.

FULL WELL NAME: Enter the full name of the well or project.

Enter the **STATE** and **COUNTY** where the well is located. For States that do not have counties, use the name of that State's equivalent jurisdiction at a more local level.

WELL LOCATION: Fill in the complete township, range, and section to the nearest quarter-quarter section. A township is north or south of the baseline, and a range is east or west of the principal meridian (e.g., T12N, R34W). Also include the distance, in feet, from the nearest north or south line and nearest east or west line of the quarter-section. Also, enter the **latitude** and **longitude** of the well in decimal degrees, to five or six places if possible; be sure to include a negative sign for the longitude of a well in the Western Hemisphere and a negative sign for the latitude of a well in the Southern Hemisphere.

Enter the **WELL CLASS,** i.e., the class of injection well as defined in 40 CFR 144.6.

TIMING OF THE ACTION: Check ***Notice prior to work*** if the activity has not yet occurred (i.e., is planned). Check ***Report after work*** if the activity described has already occurred. As appropriate, include the date the activity is expected to start or the date the activity was completed. (Note this may not be available, e.g., for a plugging plan submitted with a permit application.)

TYPE OF ACTION: Check the appropriate box to describe the kind of activity being reported. Check ***Well Rework*** for work that was/will be performed on the well after it has already been in operation as an injection well. Check ***Plugging and Abandonment*** to report on plans for or descriptions of final closure/plugging after use as an injection well. Check ***Conversion to a Non-Injection Well*** if the well is to be converted to something other than an injection well.

Provide a **NARRATIVE DESCRIPTION** of the work planned to be performed, or that was performed. The narrative should include a description of the main procedures planned or that occurred during the work activity. A service company report, daily report, or similar document may be attached if it includes all the requested information and is clear and legible.

For well reworks, include the following information: The reason for the well rework; depths of activity; type of activity; changes to injection well configuration, well casing, or cement behind casing; any plug added to the well and its depth; any newly drilled interval and its depth; method(s) to demonstrate that the well has mechanical integrity (as applicable); and any deviations from the approved rework plan (as applicable).

For a well plugging plan, include the following information: Reason for the well plugging; number of plugs placed, and their depths; materials used as plugs (e.g., cast iron bridge plug, cement, cement retainer); method to set plugs; and wait-on-cement times, if any. Also provide one or more cost estimates from an independent firm in the business of plugging and abandoning wells to plug the well as described in the plan.

For well plugging affidavit, include the following information: Reason for the well plugging; number of plugs placed, and their depths; materials used as plugs (e.g., cast iron bridge plug, cement, cement retainer); method to set plugs; wait-on-cement times, if any; and any deviations from the approved plugging plan (if applicable).

For conversion to a non-injection well, include the following information: Depths of activity; type of activity; changes to injection well configuration, well casing, or cement behind casing; any plug added to the well and its depth; any newly drilled interval and its depth; depths of new perforations; and method(s) to demonstrate that the well has mechanical integrity (as applicable).

For all of the above activities, include a well sketch depicting the work, results of well tests/logging performed, service company tickets, and any other available information demonstrating how the work was/is to be performed. Also, specify whether depths are below ground surface, relative to Kelly bushing, etc.

CERTIFICATION: This form must be signed and dated by either: a responsible corporate officer for a corporation, by a general partner for a partnership, by the proprietor of a sole proprietorship, or by a principal executive or ranking elected official for a public agency.

PAPERWORK REDUCTION ACT NOTICE: The public reporting and recordkeeping burden for this collection of information is estimated to average between 6.0 and 7.9 hours per response, depending on the injection well class. Burden means the total time, effort, or financial resource expended by persons to generate, maintain, retain, or disclose or provide information to or for a Federal Agency. This includes the time needed to review instructions; develop, acquire, install, and utilize technology and systems for the purposes of collecting, validating, and verifying information, processing and maintaining information, and disclosing and providing information; adjust the existing ways to comply with any previously applicable instructions and requirements; train personnel to be able to respond to the collection of information; search data sources; complete and review the collection of information; and, transmit or otherwise disclose the information. An agency may not conduct or sponsor, and a person is not required to respond to, a collection of information unless it displays a currently valid OMB control number. Send comments on the Agency's need for this information, the accuracy of the provided burden estimates, and any suggested methods for minimizing respondent burden, including the use of automated collection techniques to Director, Collection Strategies Division, U.S. Environmental Protection Agency (2822), 1200 Pennsylvania Ave., NW., Washington, D.C. 20460. Include the OMB control number in any correspondence. Do not send the completed forms to this address.

AS-BUILT COREHOLE 70MF

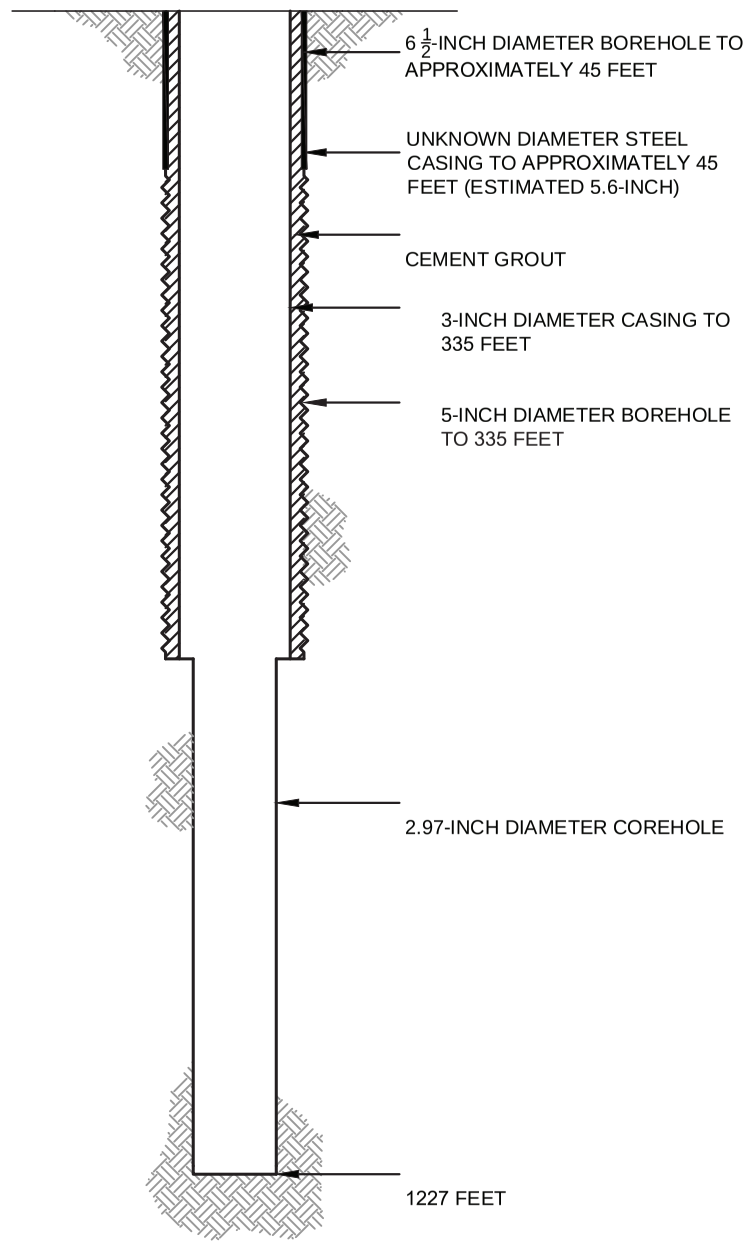

PROPOSED PLUGGING AND ABANDONMENT COREHOLE 70MF

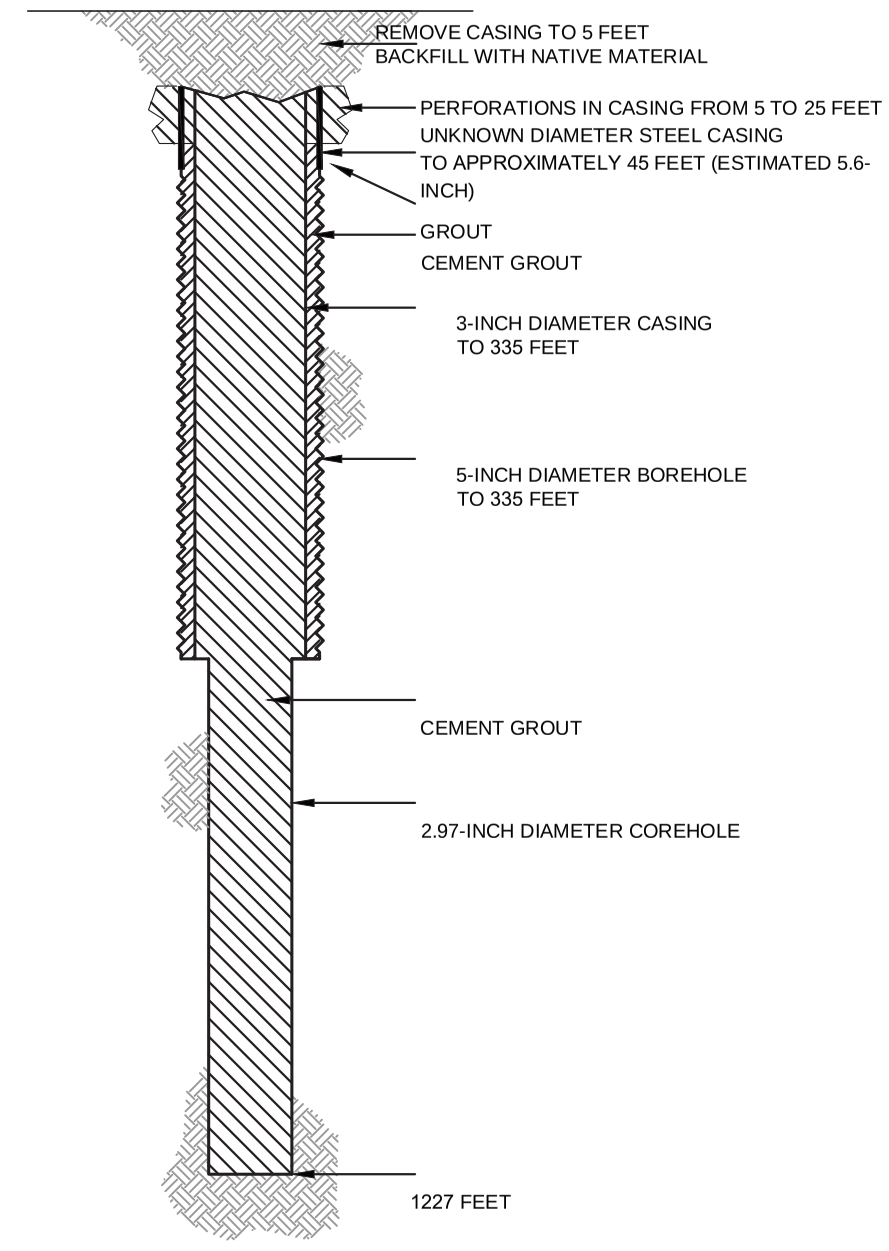

HALEY ALDRICH

FLORENCE COPPER, INC.
FLORENCE, ARIZONA

COREHOLE 70MF DIAGRAM

FLORENCE COPPER INC.

NOT TO SCALE
SEPTEMBER 2019

FIGURE 1

MOBINI, GITA Printed: 4/21/2017 12:00 PM Layout: ABANDON (2)
\PROJECTS\CURIS RESOURCES38706-CURIS FEASIBILITY\DRAWINGS\EPA\WELL ABANDON\415S_ABANDON.DWG

OMB No. 2040-0042 Approval Expires 4/30/2022

United States Environmental Protection Agency

WELL REWORK RECORD, PLUGGING AND ABANDONMENT PLAN, OR PLUGGING AND ABANDONMENT AFFIDAVIT

Name and Address, Phone Number and/or Email of Permittee

Florence Copper Project
1575 W Hunt Hwy,
Florence, AZ 85132

Permit or EPA ID Number	API Number	Full Well Name
R9UIC-AZ3-FY11-1		80S

State	County
Arizona	Pinal

Locate well in two directions from nearest lines of quarter section and drilling unit

Surface Location

NW 1/4 of SW 1/4 of Section 28 Township 4S Range 9E

Latitude 33.05214714

Longitude -111.4370838

ft. from (N/S) Line of quarter section

ft. from (E/W) Line of quarter section.

Well Class	Timing of Action (pick one)	Type of Action (pick one)
☐ Class I ☐ Class II ☑ Class III ☐ Class V	☑ Notice Prior to Work Date Expected to Commence March 2021 ☐ Report After Work Date Work Ended	☐ Well Rework ☑ Plugging and Abandonment ☐ Conversion to a Non-Injection Well

Provide a narrative description of the work planned to be performed, or that was performed. Use additional pages as necessary. See instructions.

A workover rig capable of performing the required abandonment operations at the required depths will be moved in and set up over the core hole. The core hole will be inspected to determine the depth to which the hole remains open and if any obstructions are present in the core hole; the presence and condition of any existing collar will also be documented. If necessary, the core hole will be cleaned out to a depth of at least 100 feet below the bedrock-LBFU contact to enable placement of cement seals.

If collar is present, an attempt will be made to remove it. If removal of the collar is not feasible, it will be left in the hole and perforated as needed to allow an annular seal to be placed to a depth of at least 25 feet bgs. In areas of agricultural use, the surface casing will be cut at least 5 feet bgs and removed.

If the collar cannot be removed, it will be perforated from at least 20 feet below the bedrock-LBFU contact to at least 20 feet above the contact; from at least 20 feet below the base of the MFGU to at least 20 feet above the top of the MFGU; and from at least 25 feet bgs to 5 feet bgs.

A tremie pipe will be used to place Type V cement in the open core hole from the bottom of the core hole to the top of the core hole. Cement retainers, as described above, will be used to force cement grout into the annulus and behind perforated intervals, as necessary.

If the hole has been obstructed, as much cement as possible will be placed from 100 feet below the LBFU-bedrock contact to the top of the core hole.

The volume of Type V cement will be recorded and will not be less than the estimated volume of material required to fill each interval. All cement grout will consist of Type V cement, or equivalent approved in accordance with the UIC Permit.

Certification

I certify under the penalty of law that I have personally examined and am familiar with the information submitted in this document and all attachments and that, based on my inquiry of those individuals immediately responsible for obtaining the information, I believe that the information is true, accurate, and complete. I am aware that there are significant penalties for submitting false information, including the possibliity of fine and imprisonment. (Ref. 40 CFR § 144.32)

Name and Official Title *(Please type or print)*	Signature	Date Signed
Dan Johnson, VP - General Manager		10/3/2019

INSTRUCTIONS FOR FORM 7520-19

This form replaces forms 7520-12 and 7520-14. Use this form only when work is planned or has occurred that affects the well's construction or operation as an injection well, including work on the casing, tubing or packer (or for shallow Class V wells, the subsurface fluid emplacement network). Use one form per injection well. While reports or other information developed by contractors or service companies may be attached, this form must be signed by a responsible entity as described at 40 CFR 144.32. Note: operators closing Class V wells should use Form 7520-17.

NAME, ADDRESS, PHONE AND/OR EMAIL OF PERMITTEE: Enter the name and street address, city/town, state, and ZIP code of the permittee. Also provide an email address (if available) and/or a phone number.

PERMIT OR EPA ID NUMBER: Enter the well identification number or permit number assigned to the well by the EPA or the permitting authority.

API NUMBER: Enter the number assigned by the local jurisdiction (usually a State Oil and Gas Agency) using the American Petroleum Institute standard numbering system.

FULL WELL NAME: Enter the full name of the well or project.

Enter the **STATE** and **COUNTY** where the well is located. For States that do not have counties, use the name of that State's equivalent jurisdiction at a more local level.

WELL LOCATION: Fill in the complete township, range, and section to the nearest quarter-quarter section. A township is north or south of the baseline, and a range is east or west of the principal meridian (e.g., T12N, R34W). Also include the distance, in feet, from the nearest north or south line and nearest east or west line of the quarter-section. Also, enter the **latitude** and **longitude** of the well in decimal degrees, to five or six places if possible; be sure to include a negative sign for the longitude of a well in the Western Hemisphere and a negative sign for the latitude of a well in the Southern Hemisphere.

Enter the **WELL CLASS,** i.e., the class of injection well as defined in 40 CFR 144.6.

TIMING OF THE ACTION: Check ***Notice prior to work*** if the activity has not yet occurred (i.e., is planned). Check ***Report after work*** if the activity described has already occurred. As appropriate, include the date the activity is expected to start or the date the activity was completed. (Note this may not be available, e.g., for a plugging plan submitted with a permit application.)

TYPE OF ACTION: Check the appropriate box to describe the kind of activity being reported. Check ***Well Rework*** for work that was/will be performed on the well after it has already been in operation as an injection well. Check ***Plugging and Abandonment*** to report on plans for or descriptions of final closure/plugging after use as an injection well. Check ***Conversion to a Non-Injection Well*** if the well is to be converted to something other than an injection well.

Provide a **NARRATIVE DESCRIPTION** of the work planned to be performed, or that was performed. The narrative should include a description of the main procedures planned or that occurred during the work activity. A service company report, daily report, or similar document may be attached if it includes all the requested information and is clear and legible.

For well reworks, include the following information: The reason for the well rework; depths of activity; type of activity; changes to injection well configuration, well casing, or cement behind casing; any plug added to the well and its depth; any newly drilled interval and its depth; method(s) to demonstrate that the well has mechanical integrity (as applicable); and any deviations from the approved rework plan (as applicable).

For a well plugging plan, include the following information: Reason for the well plugging; number of plugs placed, and their depths; materials used as plugs (e.g., cast iron bridge plug, cement, cement retainer); method to set plugs; and wait-on-cement times, if any. Also provide one or more cost estimates from an independent firm in the business of plugging and abandoning wells to plug the well as described in the plan.

For well plugging affidavit, include the following information: Reason for the well plugging; number of plugs placed, and their depths; materials used as plugs (e.g., cast iron bridge plug, cement, cement retainer); method to set plugs; wait-on-cement times, if any; and any deviations from the approved plugging plan (if applicable).

For conversion to a non-injection well, include the following information: Depths of activity; type of activity; changes to injection well configuration, well casing, or cement behind casing; any plug added to the well and its depth; any newly drilled interval and its depth; depths of new perforations; and method(s) to demonstrate that the well has mechanical integrity (as applicable).

For all of the above activities, include a well sketch depicting the work, results of well tests/logging performed, service company tickets, and any other available information demonstrating how the work was/is to be performed. Also, specify whether depths are below ground surface, relative to Kelly bushing, etc.

CERTIFICATION: This form must be signed and dated by either: a responsible corporate officer for a corporation, by a general partner for a partnership, by the proprietor of a sole proprietorship, or by a principal executive or ranking elected official for a public agency.

PAPERWORK REDUCTION ACT NOTICE: The public reporting and recordkeeping burden for this collection of information is estimated to average between 6.0 and 7.9 hours per response, depending on the injection well class. Burden means the total time, effort, or financial resource expended by persons to generate, maintain, retain, or disclose or provide information to or for a Federal Agency. This includes the time needed to review instructions; develop, acquire, install, and utilize technology and systems for the purposes of collecting, validating, and verifying information, processing and maintaining information, and disclosing and providing information; adjust the existing ways to comply with any previously applicable instructions and requirements; train personnel to be able to respond to the collection of information; search data sources; complete and review the collection of information; and, transmit or otherwise disclose the information. An agency may not conduct or sponsor, and a person is not required to respond to, a collection of information unless it displays a currently valid OMB control number. Send comments on the Agency's need for this information, the accuracy of the provided burden estimates, and any suggested methods for minimizing respondent burden, including the use of automated collection techniques to Director, Collection Strategies Division, U.S. Environmental Protection Agency (2822), 1200 Pennsylvania Ave., NW., Washington, D.C. 20460. Include the OMB control number in any correspondence. Do not send the completed forms to this address.

AS-BUILT COREHOLE 80S

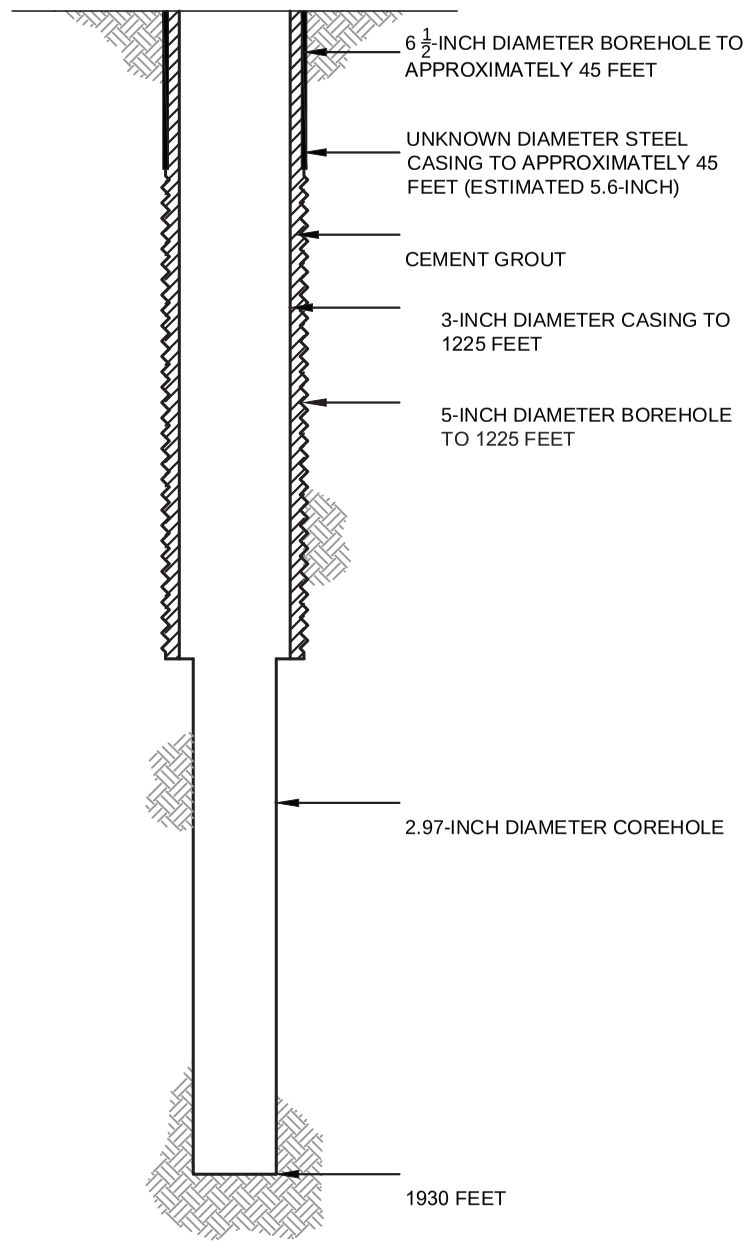

PROPOSED PLUGGING AND ABANDONMENT COREHOLE 80S

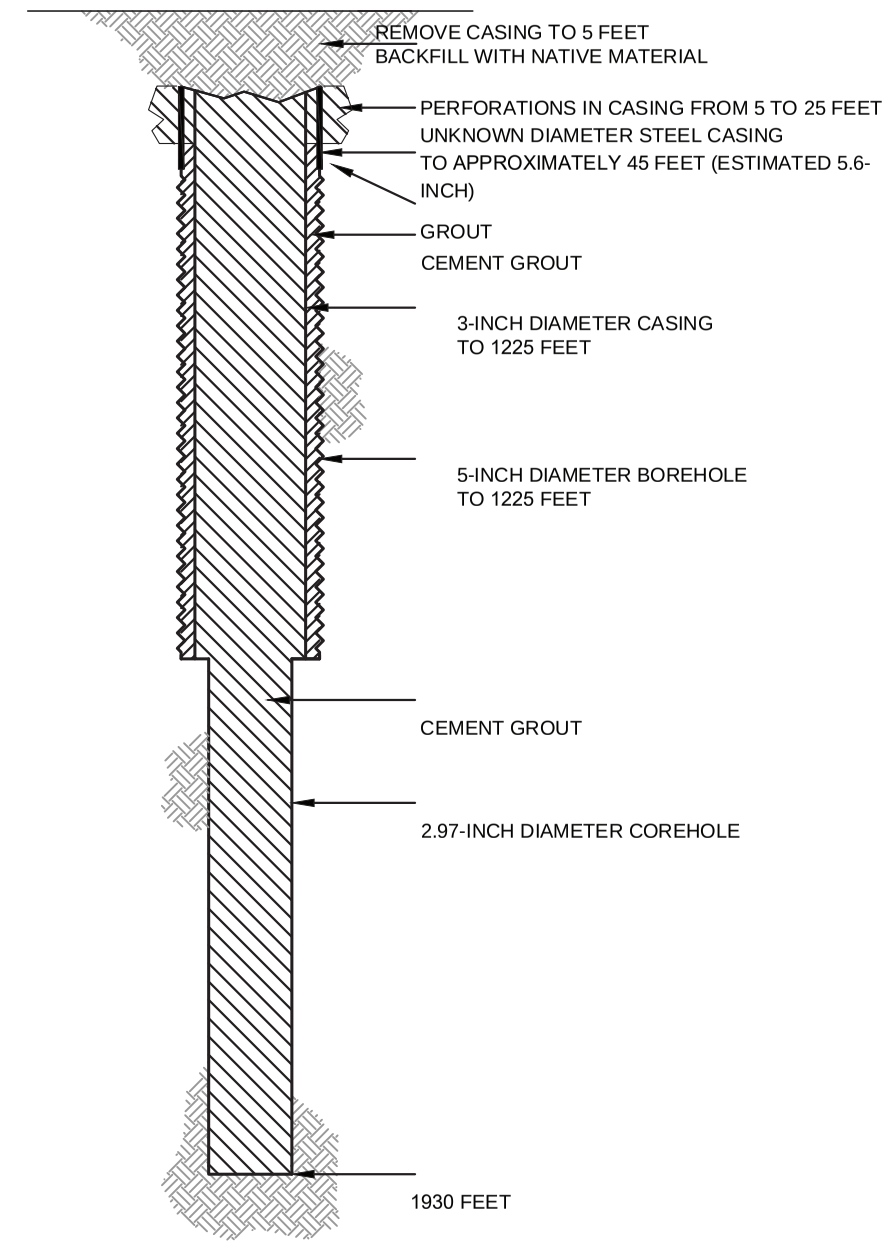

HALEY ALDRICH

FLORENCE COPPER, INC.
FLORENCE, ARIZONA

COREHOLE 80S DIAGRAM

FLORENCE COPPER INC.

NOT TO SCALE
SEPTEMBER 2019

FIGURE 1

MOBINI, GITA Printed: 4/21/2017 12:00 PM Layout: ABANDON (2)
\PROJECTS\CURIS RESOURCES38706-CURIS FEASIBILITY\DRAWINGS\EPA\WELL ABANDON\415S_ABANDON.DWG

OMB No. 2040-0042 Approval Expires 4/30/2022

United States Environmental Protection Agency

WELL REWORK RECORD, PLUGGING AND ABANDONMENT PLAN, OR PLUGGING AND ABANDONMENT AFFIDAVIT

Name and Address, Phone Number and/or Email of Permittee

Florence Copper Project
1575 W Hunt Hwy,
Florence, AZ 85132

Permit or EPA ID Number	API Number	Full Well Name
R9UIC-AZ3-FY11-1		91S

State	County
Arizona	Pinal

Locate well in two directions from nearest lines of quarter section and drilling unit

Latitude 33.0497287

Longitude -111.4240524

Surface Location

NE **1/4 of** SE **1/4 of Section** 28 **Township** 4S **Range** 9E

_____ **ft. from (N/S)** _____ **Line of quarter section**

_____ **ft. from (E/W)** _____ **Line of quarter section.**

Well Class	Timing of Action (pick one)	Type of Action (pick one)
☐ Class I ☐ Class II ☑ Class III ☐ Class V	☑ Notice Prior to Work Date Expected to Commence March 2021 ☐ Report After Work Date Work Ended	☐ Well Rework ☑ Plugging and Abandonment ☐ Conversion to a Non-Injection Well

Provide a narrative description of the work planned to be performed, or that was performed. Use additional pages as necessary. See instructions.

A workover rig capable of performing the required abandonment operations at the required depths will be moved in and set up over the core hole. The core hole will be inspected to determine the depth to which the hole remains open and if any obstructions are present in the core hole; the presence and condition of any existing collar will also be documented. If necessary, the core hole will be cleaned out to a depth of at least 100 feet below the bedrock-LBFU contact to enable placement of cement seals.

If collar is present, an attempt will be made to remove it. If removal of the collar is not feasible, it will be left in the hole and perforated as needed to allow an annular seal to be placed to a depth of at least 25 feet bgs. In areas of agricultural use, the surface casing will be cut at least 5 feet bgs and removed.

If the collar cannot be removed, it will be perforated from at least 20 feet below the bedrock-LBFU contact to at least 20 feet above the contact; from at least 20 feet below the base of the MFGU to at least 20 feet above the top of the MFGU; and from at least 25 feet bgs to 5 feet bgs.

A tremie pipe will be used to place Type V cement in the open core hole from the bottom of the core hole to the top of the core hole. Cement retainers, as described above, will be used to force cement grout into the annulus and behind perforated intervals, as necessary.

If the hole has been obstructed, as much cement as possible will be placed from 100 feet below the LBFU-bedrock contact to the top of the core hole.

The volume of Type V cement will be recorded and will not be less than the estimated volume of material required to fill each interval. All cement grout will consist of Type V cement, or equivalent approved in accordance with the UIC Permit.

Certification

I certify under the penalty of law that I have personally examined and am familiar with the information submitted in this document and all attachments and that, based on my inquiry of those individuals immediately responsible for obtaining the information, I believe that the information is true, accurate, and complete. I am aware that there are significant penalties for submitting false information, including the possibliity of fine and imprisonment. (Ref. 40 CFR § 144.32)

Name and Official Title *(Please type or print)*	Signature	Date Signed
Dan Johnson, VP - General Manager		10/3/2019

INSTRUCTIONS FOR FORM 7520-19

This form replaces forms 7520-12 and 7520-14. Use this form only when work is planned or has occurred that affects the well's construction or operation as an injection well, including work on the casing, tubing or packer (or for shallow Class V wells, the subsurface fluid emplacement network). Use one form per injection well. While reports or other information developed by contractors or service companies may be attached, this form must be signed by a responsible entity as described at 40 CFR 144.32. Note: operators closing Class V wells should use Form 7520-17.

NAME, ADDRESS, PHONE AND/OR EMAIL OF PERMITTEE: Enter the name and street address, city/town, state, and ZIP code of the permittee. Also provide an email address (if available) and/or a phone number.

PERMIT OR EPA ID NUMBER: Enter the well identification number or permit number assigned to the well by the EPA or the permitting authority.

API NUMBER: Enter the number assigned by the local jurisdiction (usually a State Oil and Gas Agency) using the American Petroleum Institute standard numbering system.

FULL WELL NAME: Enter the full name of the well or project.

Enter the **STATE** and **COUNTY** where the well is located. For States that do not have counties, use the name of that State's equivalent jurisdiction at a more local level.

WELL LOCATION: Fill in the complete township, range, and section to the nearest quarter-quarter section. A township is north or south of the baseline, and a range is east or west of the principal meridian (e.g., T12N, R34W). Also include the distance, in feet, from the nearest north or south line and nearest east or west line of the quarter-section. Also, enter the **latitude** and **longitude** of the well in decimal degrees, to five or six places if possible; be sure to include a negative sign for the longitude of a well in the Western Hemisphere and a negative sign for the latitude of a well in the Southern Hemisphere.

Enter the **WELL CLASS,** i.e., the class of injection well as defined in 40 CFR 144.6.

TIMING OF THE ACTION: Check ***Notice prior to work*** if the activity has not yet occurred (i.e., is planned). Check ***Report after work*** if the activity described has already occurred. As appropriate, include the date the activity is expected to start or the date the activity was completed. (Note this may not be available, e.g., for a plugging plan submitted with a permit application.)

TYPE OF ACTION: Check the appropriate box to describe the kind of activity being reported. Check ***Well Rework*** for work that was/will be performed on the well after it has already been in operation as an injection well. Check ***Plugging and Abandonment*** to report on plans for or descriptions of final closure/plugging after use as an injection well. Check ***Conversion to a Non-Injection Well*** if the well is to be converted to something other than an injection well.

Provide a **NARRATIVE DESCRIPTION** of the work planned to be performed, or that was performed. The narrative should include a description of the main procedures planned or that occurred during the work activity. A service company report, daily report, or similar document may be attached if it includes all the requested information and is clear and legible.

For well reworks, include the following information: The reason for the well rework; depths of activity; type of activity; changes to injection well configuration, well casing, or cement behind casing; any plug added to the well and its depth; any newly drilled interval and its depth; method(s) to demonstrate that the well has mechanical integrity (as applicable); and any deviations from the approved rework plan (as applicable).

For a well plugging plan, include the following information: Reason for the well plugging; number of plugs placed, and their depths; materials used as plugs (e.g., cast iron bridge plug, cement, cement retainer); method to set plugs; and wait-on-cement times, if any. Also provide one or more cost estimates from an independent firm in the business of plugging and abandoning wells to plug the well as described in the plan.

For well plugging affidavit, include the following information: Reason for the well plugging; number of plugs placed, and their depths; materials used as plugs (e.g., cast iron bridge plug, cement, cement retainer); method to set plugs; wait-on-cement times, if any; and any deviations from the approved plugging plan (if applicable).

For conversion to a non-injection well, include the following information: Depths of activity; type of activity; changes to injection well configuration, well casing, or cement behind casing; any plug added to the well and its depth; any newly drilled interval and its depth; depths of new perforations; and method(s) to demonstrate that the well has mechanical integrity (as applicable).

For all of the above activities, include a well sketch depicting the work, results of well tests/logging performed, service company tickets, and any other available information demonstrating how the work was/is to be performed. Also, specify whether depths are below ground surface, relative to Kelly bushing, etc.

CERTIFICATION: This form must be signed and dated by either: a responsible corporate officer for a corporation, by a general partner for a partnership, by the proprietor of a sole proprietorship, or by a principal executive or ranking elected official for a public agency.

PAPERWORK REDUCTION ACT NOTICE: The public reporting and recordkeeping burden for this collection of information is estimated to average between 6.0 and 7.9 hours per response, depending on the injection well class. Burden means the total time, effort, or financial resource expended by persons to generate, maintain, retain, or disclose or provide information to or for a Federal Agency. This includes the time needed to review instructions; develop, acquire, install, and utilize technology and systems for the purposes of collecting, validating, and verifying information, processing and maintaining information, and disclosing and providing information; adjust the existing ways to comply with any previously applicable instructions and requirements; train personnel to be able to respond to the collection of information; search data sources; complete and review the collection of information; and, transmit or otherwise disclose the information. An agency may not conduct or sponsor, and a person is not required to respond to, a collection of information unless it displays a currently valid OMB control number. Send comments on the Agency's need for this information, the accuracy of the provided burden estimates, and any suggested methods for minimizing respondent burden, including the use of automated collection techniques to Director, Collection Strategies Division, U.S. Environmental Protection Agency (2822), 1200 Pennsylvania Ave., NW., Washington, D.C. 20460. Include the OMB control number in any correspondence. Do not send the completed forms to this address.

AS-BUILT COREHOLE 91S

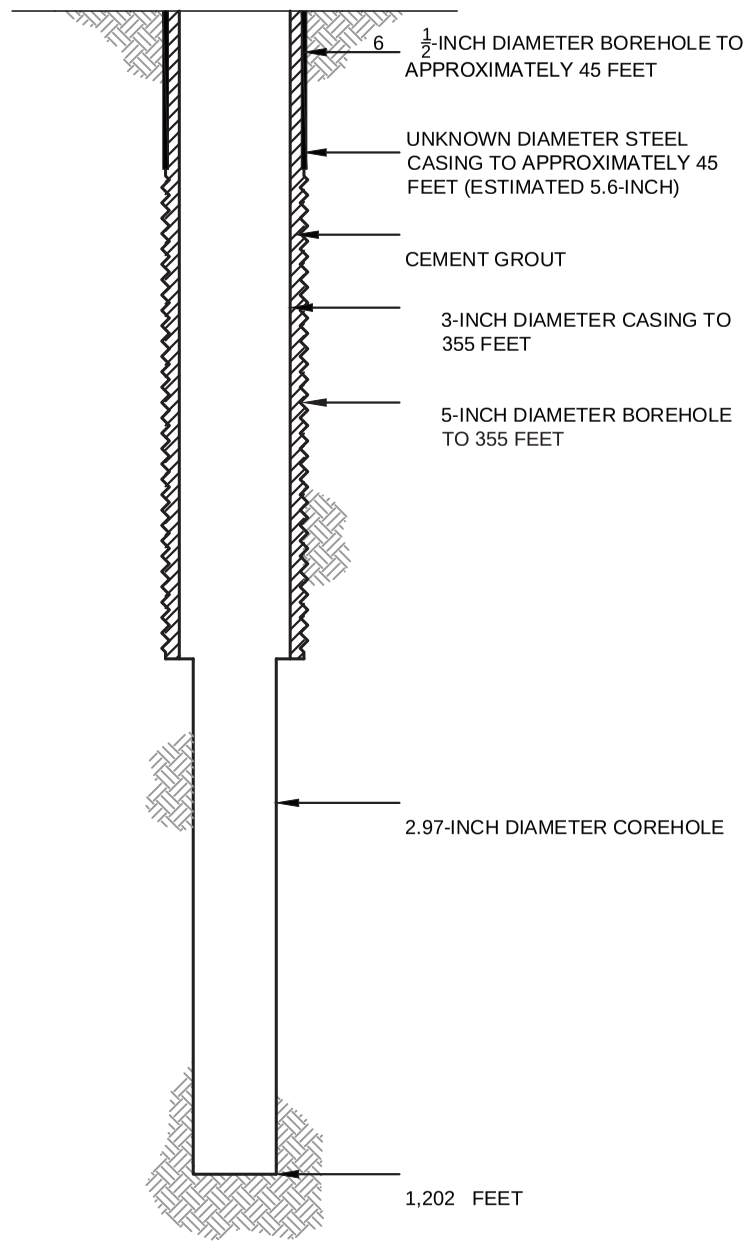

PROPOSED PLUGGING AND ABANDONMENT COREHOLE 91S

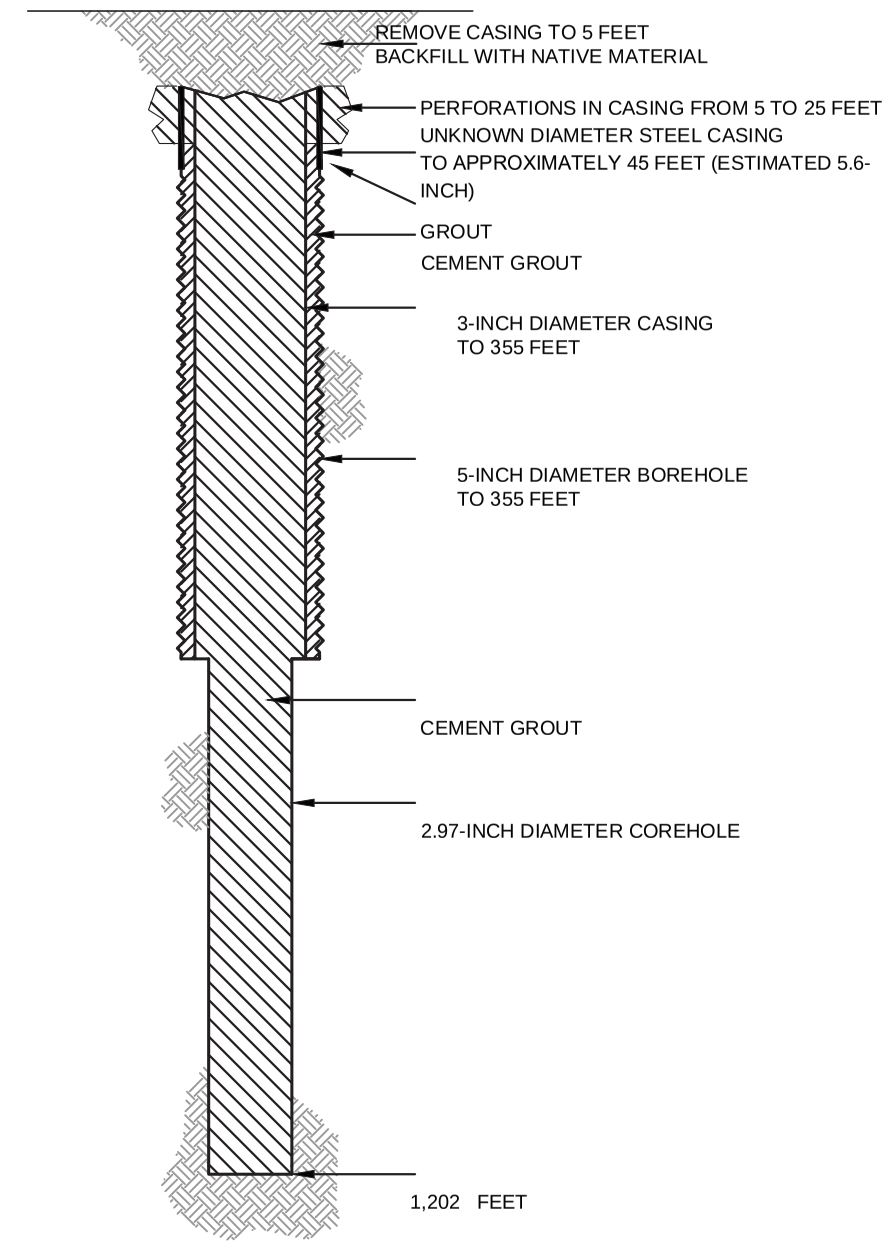

HALEY ALDRICH

FLORENCE COPPER, INC.
FLORENCE, ARIZONA

COREHOLE 91S DIAGRAM

FLORENCE COPPER INC.

NOT TO SCALE
SEPTEMBER 2019

FIGURE 1

MOBINI, GITA Printed: 4/21/2017 12:00 PM Layout: ABANDON (2)
\PROJECTS\CURIS RESOURCES38706-CURIS FEASIBILITY\DRAWINGS\EPA\WELL ABANDON\415S_ABANDON.DWG

OMB No. 2040-0042 Approval Expires 4/30/2022

United States Environmental Protection Agency

WELL REWORK RECORD, PLUGGING AND ABANDONMENT PLAN, OR PLUGGING AND ABANDONMENT AFFIDAVIT

Name and Address, Phone Number and/or Email of Permittee

Florence Copper Project
1575 W Hunt Hwy,
Florence, AZ 85132

Permit or EPA ID Number	API Number	Full Well Name
R9UIC-AZ3-FY11-1		92S

State	County
Arizona	Pinal

Locate well in two directions from nearest lines of quarter section and drilling unit

Latitude 33.04973401

Longitude -111.4256776

Surface Location

NW **1/4 of** SE **1/4 of Section** 28 **Township** 4S **Range** 9E

_____ **ft. from (N/S)** _____ **Line of quarter section**

_____ **ft. from (E/W)** _____ **Line of quarter section.**

Well Class	Timing of Action (pick one)	Type of Action (pick one)
☐ Class I ☐ Class II ☑ Class III ☐ Class V	☑ Notice Prior to Work Date Expected to Commence March 2021 ☐ Report After Work Date Work Ended	☐ Well Rework ☑ Plugging and Abandonment ☐ Conversion to a Non-Injection Well

Provide a narrative description of the work planned to be performed, or that was performed. Use additional pages as necessary. See instructions.

A workover rig capable of performing the required abandonment operations at the required depths will be moved in and set up over the core hole. The core hole will be inspected to determine the depth to which the hole remains open and if any obstructions are present in the core hole; the presence and condition of any existing collar will also be documented. If necessary, the core hole will be cleaned out to a depth of at least 100 feet below the bedrock-LBFU contact to enable placement of cement seals.

If collar is present, an attempt will be made to remove it. If removal of the collar is not feasible, it will be left in the hole and perforated as needed to allow an annular seal to be placed to a depth of at least 25 feet bgs. In areas of agricultural use, the surface casing will be cut at least 5 feet bgs and removed.

If the collar cannot be removed, it will be perforated from at least 20 feet below the bedrock-LBFU contact to at least 20 feet above the contact; from at least 20 feet below the base of the MFGU to at least 20 feet above the top of the MFGU; and from at least 25 feet bgs to 5 feet bgs.

A tremie pipe will be used to place Type V cement in the open core hole from the bottom of the core hole to the top of the core hole. Cement retainers, as described above, will be used to force cement grout into the annulus and behind perforated intervals, as necessary.

If the hole has been obstructed, as much cement as possible will be placed from 100 feet below the LBFU-bedrock contact to the top of the core hole.

The volume of Type V cement will be recorded and will not be less than the estimated volume of material required to fill each interval. All cement grout will consist of Type V cement, or equivalent approved in accordance with the UIC Permit.

Certification

I certify under the penalty of law that I have personally examined and am familiar with the information submitted in this document and all attachments and that, based on my inquiry of those individuals immediately responsible for obtaining the information, I believe that the information is true, accurate, and complete. I am aware that there are significant penalties for submitting false information, including the possibliity of fine and imprisonment. (Ref. 40 CFR § 144.32)

Name and Official Title *(Please type or print)*	Signature	Date Signed
Dan Johnson, VP - General Manager		10/3/2019

INSTRUCTIONS FOR FORM 7520-19

This form replaces forms 7520-12 and 7520-14. Use this form only when work is planned or has occurred that affects the well's construction or operation as an injection well, including work on the casing, tubing or packer (or for shallow Class V wells, the subsurface fluid emplacement network). Use one form per injection well. While reports or other information developed by contractors or service companies may be attached, this form must be signed by a responsible entity as described at 40 CFR 144.32. Note: operators closing Class V wells should use Form 7520-17.

NAME, ADDRESS, PHONE AND/OR EMAIL OF PERMITTEE: Enter the name and street address, city/town, state, and ZIP code of the permittee. Also provide an email address (if available) and/or a phone number.

PERMIT OR EPA ID NUMBER: Enter the well identification number or permit number assigned to the well by the EPA or the permitting authority.

API NUMBER: Enter the number assigned by the local jurisdiction (usually a State Oil and Gas Agency) using the American Petroleum Institute standard numbering system.

FULL WELL NAME: Enter the full name of the well or project.

Enter the **STATE** and **COUNTY** where the well is located. For States that do not have counties, use the name of that State's equivalent jurisdiction at a more local level.

WELL LOCATION: Fill in the complete township, range, and section to the nearest quarter-quarter section. A township is north or south of the baseline, and a range is east or west of the principal meridian (e.g., T12N, R34W). Also include the distance, in feet, from the nearest north or south line and nearest east or west line of the quarter-section. Also, enter the **latitude** and **longitude** of the well in decimal degrees, to five or six places if possible; be sure to include a negative sign for the longitude of a well in the Western Hemisphere and a negative sign for the latitude of a well in the Southern Hemisphere.

Enter the **WELL CLASS,** i.e., the class of injection well as defined in 40 CFR 144.6.

TIMING OF THE ACTION: Check ***Notice prior to work*** if the activity has not yet occurred (i.e., is planned). Check ***Report after work*** if the activity described has already occurred. As appropriate, include the date the activity is expected to start or the date the activity was completed. (Note this may not be available, e.g., for a plugging plan submitted with a permit application.)

TYPE OF ACTION: Check the appropriate box to describe the kind of activity being reported. Check ***Well Rework*** for work that was/will be performed on the well after it has already been in operation as an injection well. Check ***Plugging and Abandonment*** to report on plans for or descriptions of final closure/plugging after use as an injection well. Check ***Conversion to a Non-Injection Well*** if the well is to be converted to something other than an injection well.

Provide a **NARRATIVE DESCRIPTION** of the work planned to be performed, or that was performed. The narrative should include a description of the main procedures planned or that occurred during the work activity. A service company report, daily report, or similar document may be attached if it includes all the requested information and is clear and legible.

For well reworks, include the following information: The reason for the well rework; depths of activity; type of activity; changes to injection well configuration, well casing, or cement behind casing; any plug added to the well and its depth; any newly drilled interval and its depth; method(s) to demonstrate that the well has mechanical integrity (as applicable); and any deviations from the approved rework plan (as applicable).

For a well plugging plan, include the following information: Reason for the well plugging; number of plugs placed, and their depths; materials used as plugs (e.g., cast iron bridge plug, cement, cement retainer); method to set plugs; and wait-on-cement times, if any. Also provide one or more cost estimates from an independent firm in the business of plugging and abandoning wells to plug the well as described in the plan.

For well plugging affidavit, include the following information: Reason for the well plugging; number of plugs placed, and their depths; materials used as plugs (e.g., cast iron bridge plug, cement, cement retainer); method to set plugs; wait-on-cement times, if any; and any deviations from the approved plugging plan (if applicable).

For conversion to a non-injection well, include the following information: Depths of activity; type of activity; changes to injection well configuration, well casing, or cement behind casing; any plug added to the well and its depth; any newly drilled interval and its depth; depths of new perforations; and method(s) to demonstrate that the well has mechanical integrity (as applicable).

For all of the above activities, include a well sketch depicting the work, results of well tests/logging performed, service company tickets, and any other available information demonstrating how the work was/is to be performed. Also, specify whether depths are below ground surface, relative to Kelly bushing, etc.

CERTIFICATION: This form must be signed and dated by either: a responsible corporate officer for a corporation, by a general partner for a partnership, by the proprietor of a sole proprietorship, or by a principal executive or ranking elected official for a public agency.

PAPERWORK REDUCTION ACT NOTICE: The public reporting and recordkeeping burden for this collection of information is estimated to average between 6.0 and 7.9 hours per response, depending on the injection well class. Burden means the total time, effort, or financial resource expended by persons to generate, maintain, retain, or disclose or provide information to or for a Federal Agency. This includes the time needed to review instructions; develop, acquire, install, and utilize technology and systems for the purposes of collecting, validating, and verifying information, processing and maintaining information, and disclosing and providing information; adjust the existing ways to comply with any previously applicable instructions and requirements; train personnel to be able to respond to the collection of information; search data sources; complete and review the collection of information; and, transmit or otherwise disclose the information. An agency may not conduct or sponsor, and a person is not required to respond to, a collection of information unless it displays a currently valid OMB control number. Send comments on the Agency's need for this information, the accuracy of the provided burden estimates, and any suggested methods for minimizing respondent burden, including the use of automated collection techniques to Director, Collection Strategies Division, U.S. Environmental Protection Agency (2822), 1200 Pennsylvania Ave., NW., Washington, D.C. 20460. Include the OMB control number in any correspondence. Do not send the completed forms to this address.

AS-BUILT COREHOLE 92S

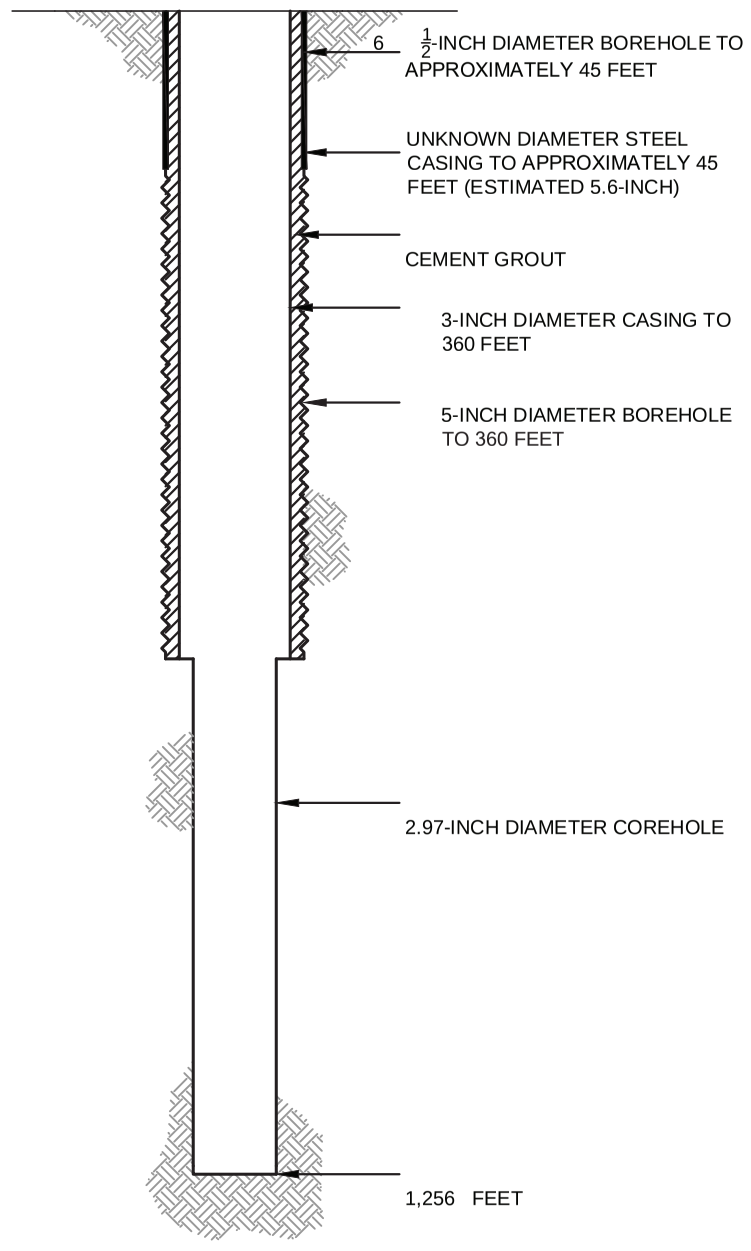

PROPOSED PLUGGING AND ABANDONMENT COREHOLE 92S

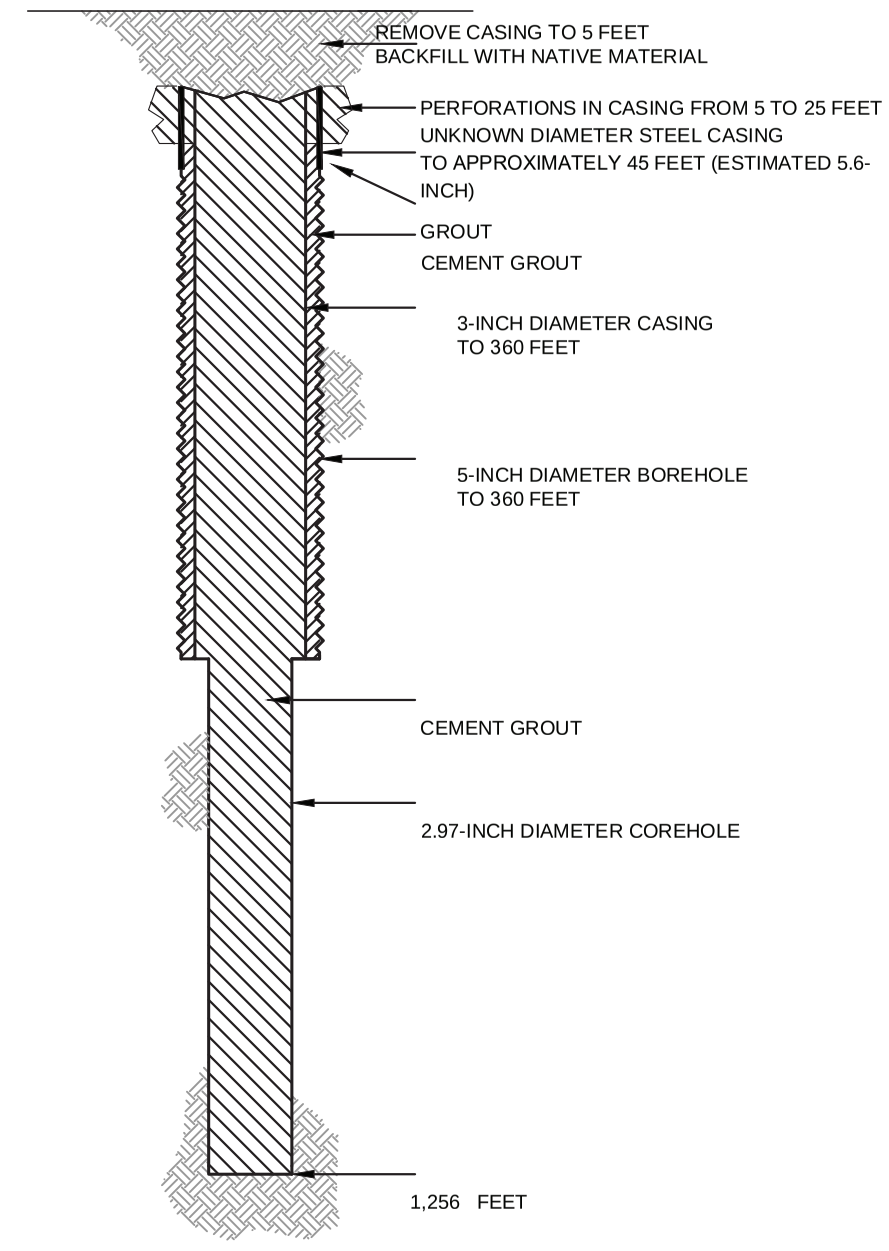

HALEY ALDRICH

FLORENCE COPPER, INC.
FLORENCE, ARIZONA

COREHOLE 92S DIAGRAM

FLORENCE COPPER INC.

NOT TO SCALE
SEPTEMBER 2019

FIGURE 1

MOBINI, GITA Printed: 4/21/2017 12:00 PM Layout: ABANDON (2)
\PROJECTS\CURIS RESOURCES38706-CURIS FEASIBILITY\DRAWINGS\EPA\WELL ABANDON\415S_ABANDON.DWG

OMB No. 2040-0042 Approval Expires 4/30/2022

United States Environmental Protection Agency

WELL REWORK RECORD, PLUGGING AND ABANDONMENT PLAN, OR PLUGGING AND ABANDONMENT AFFIDAVIT

Name and Address, Phone Number and/or Email of Permittee

Florence Copper Project
1575 W Hunt Hwy,
Florence, AZ 85132

Permit or EPA ID Number	API Number	Full Well Name
R9UIC-AZ3-FY11-1		92SA

State	County
Arizona	Pinal

Locate well in two directions from nearest lines of quarter section and drilling unit

Surface Location

NW 1/4 of SE 1/4 of Section 28 Township 4S Range 9E

Latitude 33.0499978

Longitude -111.4257992

ft. from (N/S) Line of quarter section

ft. from (E/W) Line of quarter section.

Well Class	Timing of Action (pick one)	Type of Action (pick one)
☐ Class I ☐ Class II ☑ Class III ☐ Class V	☑ Notice Prior to Work Date Expected to Commence March 2021 ☐ Report After Work Date Work Ended	☐ Well Rework ☑ Plugging and Abandonment ☐ Conversion to a Non-Injection Well

Provide a narrative description of the work planned to be performed, or that was performed. Use additional pages as necessary. See instructions.

A workover rig capable of performing the required abandonment operations at the required depths will be moved in and set up over the core hole. The core hole will be inspected to determine the depth to which the hole remains open and if any obstructions are present in the core hole; the presence and condition of any existing collar will also be documented. If necessary, the core hole will be cleaned out to a depth of at least 100 feet below the bedrock-LBFU contact to enable placement of cement seals.

If collar is present, an attempt will be made to remove it. If removal of the collar is not feasible, it will be left in the hole and perforated as needed to allow an annular seal to be placed to a depth of at least 25 feet bgs. In areas of agricultural use, the surface casing will be cut at least 5 feet bgs and removed.

If the collar cannot be removed, it will be perforated from at least 20 feet below the bedrock-LBFU contact to at least 20 feet above the contact; from at least 20 feet below the base of the MFGU to at least 20 feet above the top of the MFGU; and from at least 25 feet bgs to 5 feet bgs.

A tremie pipe will be used to place Type V cement in the open core hole from the bottom of the core hole to the top of the core hole. Cement retainers, as described above, will be used to force cement grout into the annulus and behind perforated intervals, as necessary.

If the hole has been obstructed, as much cement as possible will be placed from 100 feet below the LBFU-bedrock contact to the top of the core hole.

The volume of Type V cement will be recorded and will not be less than the estimated volume of material required to fill each interval. All cement grout will consist of Type V cement, or equivalent approved in accordance with the UIC Permit.

Certification

I certify under the penalty of law that I have personally examined and am familiar with the information submitted in this document and all attachments and that, based on my inquiry of those individuals immediately responsible for obtaining the information, I believe that the information is true, accurate, and complete. I am aware that there are significant penalties for submitting false information, including the possibliity of fine and imprisonment. (Ref. 40 CFR § 144.32)

Name and Official Title *(Please type or print)*	Signature	Date Signed
Dan Johnson, VP - General Manager		10/3/2019

INSTRUCTIONS FOR FORM 7520-19

This form replaces forms 7520-12 and 7520-14. Use this form only when work is planned or has occurred that affects the well's construction or operation as an injection well, including work on the casing, tubing or packer (or for shallow Class V wells, the subsurface fluid emplacement network). Use one form per injection well. While reports or other information developed by contractors or service companies may be attached, this form must be signed by a responsible entity as described at 40 CFR 144.32. Note: operators closing Class V wells should use Form 7520-17.

NAME, ADDRESS, PHONE AND/OR EMAIL OF PERMITTEE: Enter the name and street address, city/town, state, and ZIP code of the permittee. Also provide an email address (if available) and/or a phone number.

PERMIT OR EPA ID NUMBER: Enter the well identification number or permit number assigned to the well by the EPA or the permitting authority.

API NUMBER: Enter the number assigned by the local jurisdiction (usually a State Oil and Gas Agency) using the American Petroleum Institute standard numbering system.

FULL WELL NAME: Enter the full name of the well or project.

Enter the **STATE** and **COUNTY** where the well is located. For States that do not have counties, use the name of that State's equivalent jurisdiction at a more local level.

WELL LOCATION: Fill in the complete township, range, and section to the nearest quarter-quarter section. A township is north or south of the baseline, and a range is east or west of the principal meridian (e.g., T12N, R34W). Also include the distance, in feet, from the nearest north or south line and nearest east or west line of the quarter-section. Also, enter the **latitude** and **longitude** of the well in decimal degrees, to five or six places if possible; be sure to include a negative sign for the longitude of a well in the Western Hemisphere and a negative sign for the latitude of a well in the Southern Hemisphere.

Enter the **WELL CLASS,** i.e., the class of injection well as defined in 40 CFR 144.6.

TIMING OF THE ACTION: Check ***Notice prior to work*** if the activity has not yet occurred (i.e., is planned). Check ***Report after work*** if the activity described has already occurred. As appropriate, include the date the activity is expected to start or the date the activity was completed. (Note this may not be available, e.g., for a plugging plan submitted with a permit application.)

TYPE OF ACTION: Check the appropriate box to describe the kind of activity being reported. Check ***Well Rework*** for work that was/will be performed on the well after it has already been in operation as an injection well. Check ***Plugging and Abandonment*** to report on plans for or descriptions of final closure/plugging after use as an injection well. Check ***Conversion to a Non-Injection Well*** if the well is to be converted to something other than an injection well.

Provide a **NARRATIVE DESCRIPTION** of the work planned to be performed, or that was performed. The narrative should include a description of the main procedures planned or that occurred during the work activity. A service company report, daily report, or similar document may be attached if it includes all the requested information and is clear and legible.

For well reworks, include the following information: The reason for the well rework; depths of activity; type of activity; changes to injection well configuration, well casing, or cement behind casing; any plug added to the well and its depth; any newly drilled interval and its depth; method(s) to demonstrate that the well has mechanical integrity (as applicable); and any deviations from the approved rework plan (as applicable).

For a well plugging plan, include the following information: Reason for the well plugging; number of plugs placed, and their depths; materials used as plugs (e.g., cast iron bridge plug, cement, cement retainer); method to set plugs; and wait-on-cement times, if any. Also provide one or more cost estimates from an independent firm in the business of plugging and abandoning wells to plug the well as described in the plan.

For well plugging affidavit, include the following information: Reason for the well plugging; number of plugs placed, and their depths; materials used as plugs (e.g., cast iron bridge plug, cement, cement retainer); method to set plugs; wait-on-cement times, if any; and any deviations from the approved plugging plan (if applicable).

For conversion to a non-injection well, include the following information: Depths of activity; type of activity; changes to injection well configuration, well casing, or cement behind casing; any plug added to the well and its depth; any newly drilled interval and its depth; depths of new perforations; and method(s) to demonstrate that the well has mechanical integrity (as applicable).

For all of the above activities, include a well sketch depicting the work, results of well tests/logging performed, service company tickets, and any other available information demonstrating how the work was/is to be performed. Also, specify whether depths are below ground surface, relative to Kelly bushing, etc.

CERTIFICATION: This form must be signed and dated by either: a responsible corporate officer for a corporation, by a general partner for a partnership, by the proprietor of a sole proprietorship, or by a principal executive or ranking elected official for a public agency.

PAPERWORK REDUCTION ACT NOTICE: The public reporting and recordkeeping burden for this collection of information is estimated to average between 6.0 and 7.9 hours per response, depending on the injection well class. Burden means the total time, effort, or financial resource expended by persons to generate, maintain, retain, or disclose or provide information to or for a Federal Agency. This includes the time needed to review instructions; develop, acquire, install, and utilize technology and systems for the purposes of collecting, validating, and verifying information, processing and maintaining information, and disclosing and providing information; adjust the existing ways to comply with any previously applicable instructions and requirements; train personnel to be able to respond to the collection of information; search data sources; complete and review the collection of information; and, transmit or otherwise disclose the information. An agency may not conduct or sponsor, and a person is not required to respond to, a collection of information unless it displays a currently valid OMB control number. Send comments on the Agency's need for this information, the accuracy of the provided burden estimates, and any suggested methods for minimizing respondent burden, including the use of automated collection techniques to Director, Collection Strategies Division, U.S. Environmental Protection Agency (2822), 1200 Pennsylvania Ave., NW., Washington, D.C. 20460. Include the OMB control number in any correspondence. Do not send the completed forms to this address.

AS-BUILT COREHOLE 92SA

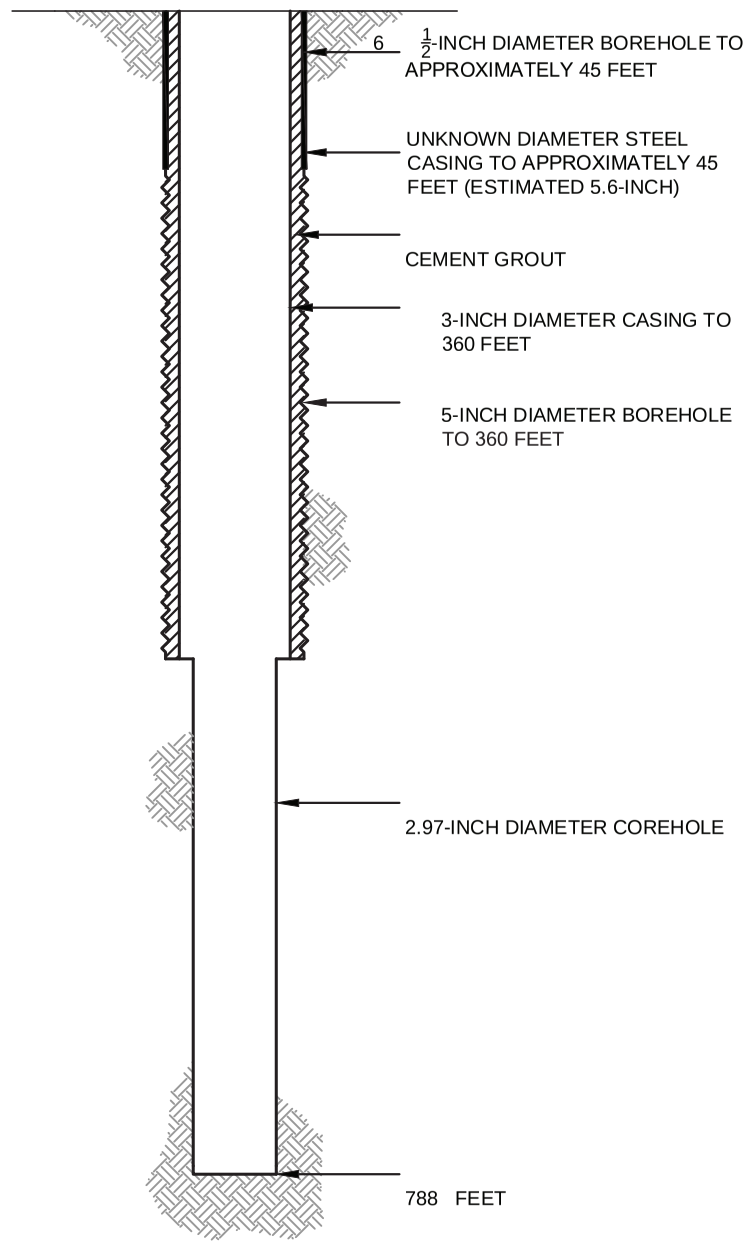

PROPOSED PLUGGING AND ABANDONMENT COREHOLE 92SA

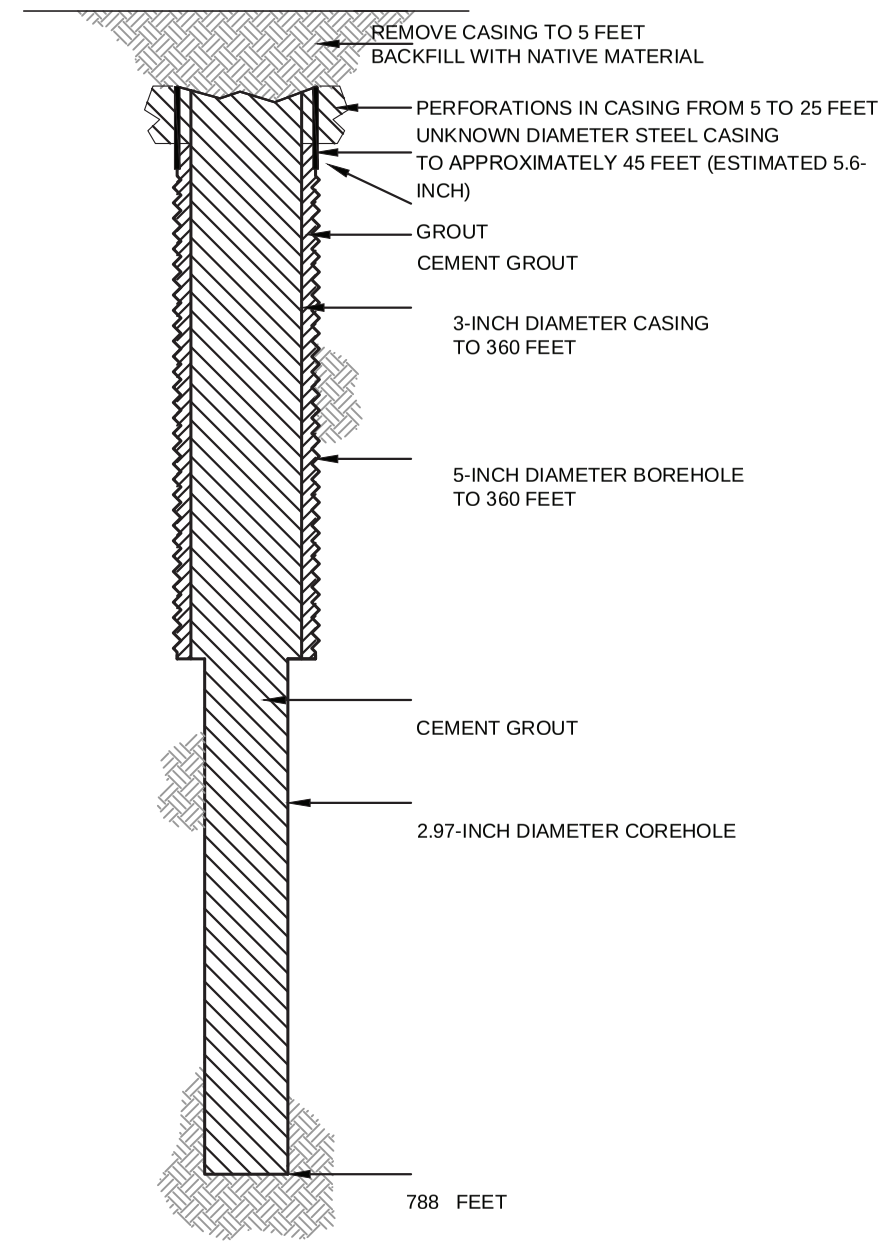

HALEY ALDRICH

FLORENCE COPPER, INC.
FLORENCE, ARIZONA

COREHOLE 92SA DIAGRAM

FLORENCE COPPER INC.

NOT TO SCALE
SEPTEMBER 2019

FIGURE 1

MOBINI, GITA Printed: 4/21/2017 12:00 PM Layout: ABANDON (2)
\PROJECTS\CURIS RESOURCES38706-CURIS FEASIBILITY\DRAWINGS\EPA\WELL ABANDON\415S_ABANDON.DWG

OMB No. 2040-0042 Approval Expires 4/30/2022

United States Environmental Protection Agency

EPA

WELL REWORK RECORD, PLUGGING AND ABANDONMENT PLAN, OR PLUGGING AND ABANDONMENT AFFIDAVIT

Name and Address, Phone Number and/or Email of Permittee

Florence Copper Project
1575 W Hunt Hwy,
Florence, AZ 85132

Permit or EPA ID Number	API Number	Full Well Name
R9UIC-AZ3-FY11-1		93S

State	County
Arizona	Pinal

Locate well in two directions from nearest lines of quarter section and drilling unit

Latitude 33.04973957

Longitude -111.4273035

Surface Location

NW **1/4 of** SE **1/4 of Section** 28 **Township** 4S **Range** 9E

_____ **ft. from (N/S)** _____ **Line of quarter section**

_____ **ft. from (E/W)** _____ **Line of quarter section.**

Well Class	Timing of Action (pick one)	Type of Action (pick one)
☐ Class I ☐ Class II ☑ Class III ☐ Class V	☑ Notice Prior to Work Date Expected to Commence March 2021 ☐ Report After Work Date Work Ended	☐ Well Rework ☑ Plugging and Abandonment ☐ Conversion to a Non-Injection Well

Provide a narrative description of the work planned to be performed, or that was performed. Use additional pages as necessary. See instructions.

A workover rig capable of performing the required abandonment operations at the required depths will be moved in and set up over the core hole. The core hole will be inspected to determine the depth to which the hole remains open and if any obstructions are present in the core hole; the presence and condition of any existing collar will also be documented. If necessary, the core hole will be cleaned out to a depth of at least 100 feet below the bedrock-LBFU contact to enable placement of cement seals.

If collar is present, an attempt will be made to remove it. If removal of the collar is not feasible, it will be left in the hole and perforated as needed to allow an annular seal to be placed to a depth of at least 25 feet bgs. In areas of agricultural use, the surface casing will be cut at least 5 feet bgs and removed.

If the collar cannot be removed, it will be perforated from at least 20 feet below the bedrock-LBFU contact to at least 20 feet above the contact; from at least 20 feet below the base of the MFGU to at least 20 feet above the top of the MFGU; and from at least 25 feet bgs to 5 feet bgs.

A tremie pipe will be used to place Type V cement in the open core hole from the bottom of the core hole to the top of the core hole. Cement retainers, as described above, will be used to force cement grout into the annulus and behind perforated intervals, as necessary.

If the hole has been obstructed, as much cement as possible will be placed from 100 feet below the LBFU-bedrock contact to the top of the core hole.

The volume of Type V cement will be recorded and will not be less than the estimated volume of material required to fill each interval. All cement grout will consist of Type V cement, or equivalent approved in accordance with the UIC Permit.

Certification

I certify under the penalty of law that I have personally examined and am familiar with the information submitted in this document and all attachments and that, based on my inquiry of those individuals immediately responsible for obtaining the information, I believe that the information is true, accurate, and complete. I am aware that there are significant penalties for submitting false information, including the possibliity of fine and imprisonment. (Ref. 40 CFR § 144.32)

Name and Official Title *(Please type or print)*	Signature	Date Signed
Dan Johnson, VP - General Manager		10/3/2019

INSTRUCTIONS FOR FORM 7520-19

This form replaces forms 7520-12 and 7520-14. Use this form only when work is planned or has occurred that affects the well's construction or operation as an injection well, including work on the casing, tubing or packer (or for shallow Class V wells, the subsurface fluid emplacement network). Use one form per injection well. While reports or other information developed by contractors or service companies may be attached, this form must be signed by a responsible entity as described at 40 CFR 144.32. Note: operators closing Class V wells should use Form 7520-17.

NAME, ADDRESS, PHONE AND/OR EMAIL OF PERMITTEE: Enter the name and street address, city/town, state, and ZIP code of the permittee. Also provide an email address (if available) and/or a phone number.

PERMIT OR EPA ID NUMBER: Enter the well identification number or permit number assigned to the well by the EPA or the permitting authority.

API NUMBER: Enter the number assigned by the local jurisdiction (usually a State Oil and Gas Agency) using the American Petroleum Institute standard numbering system.

FULL WELL NAME: Enter the full name of the well or project.

Enter the **STATE** and **COUNTY** where the well is located. For States that do not have counties, use the name of that State's equivalent jurisdiction at a more local level.

WELL LOCATION: Fill in the complete township, range, and section to the nearest quarter-quarter section. A township is north or south of the baseline, and a range is east or west of the principal meridian (e.g., T12N, R34W). Also include the distance, in feet, from the nearest north or south line and nearest east or west line of the quarter-section. Also, enter the **latitude** and **longitude** of the well in decimal degrees, to five or six places if possible; be sure to include a negative sign for the longitude of a well in the Western Hemisphere and a negative sign for the latitude of a well in the Southern Hemisphere.

Enter the **WELL CLASS,** i.e., the class of injection well as defined in 40 CFR 144.6.

TIMING OF THE ACTION: Check ***Notice prior to work*** if the activity has not yet occurred (i.e., is planned). Check ***Report after work*** if the activity described has already occurred. As appropriate, include the date the activity is expected to start or the date the activity was completed. (Note this may not be available, e.g., for a plugging plan submitted with a permit application.)

TYPE OF ACTION: Check the appropriate box to describe the kind of activity being reported. Check ***Well Rework*** for work that was/will be performed on the well after it has already been in operation as an injection well. Check ***Plugging and Abandonment*** to report on plans for or descriptions of final closure/plugging after use as an injection well. Check ***Conversion to a Non-Injection Well*** if the well is to be converted to something other than an injection well.

Provide a **NARRATIVE DESCRIPTION** of the work planned to be performed, or that was performed. The narrative should include a description of the main procedures planned or that occurred during the work activity. A service company report, daily report, or similar document may be attached if it includes all the requested information and is clear and legible.

For well reworks, include the following information: The reason for the well rework; depths of activity; type of activity; changes to injection well configuration, well casing, or cement behind casing; any plug added to the well and its depth; any newly drilled interval and its depth; method(s) to demonstrate that the well has mechanical integrity (as applicable); and any deviations from the approved rework plan (as applicable).

For a well plugging plan, include the following information: Reason for the well plugging; number of plugs placed, and their depths; materials used as plugs (e.g., cast iron bridge plug, cement, cement retainer); method to set plugs; and wait-on-cement times, if any. Also provide one or more cost estimates from an independent firm in the business of plugging and abandoning wells to plug the well as described in the plan.

For well plugging affidavit, include the following information: Reason for the well plugging; number of plugs placed, and their depths; materials used as plugs (e.g., cast iron bridge plug, cement, cement retainer); method to set plugs; wait-on-cement times, if any; and any deviations from the approved plugging plan (if applicable).

For conversion to a non-injection well, include the following information: Depths of activity; type of activity; changes to injection well configuration, well casing, or cement behind casing; any plug added to the well and its depth; any newly drilled interval and its depth; depths of new perforations; and method(s) to demonstrate that the well has mechanical integrity (as applicable).

For all of the above activities, include a well sketch depicting the work, results of well tests/logging performed, service company tickets, and any other available information demonstrating how the work was/is to be performed. Also, specify whether depths are below ground surface, relative to Kelly bushing, etc.

CERTIFICATION: This form must be signed and dated by either: a responsible corporate officer for a corporation, by a general partner for a partnership, by the proprietor of a sole proprietorship, or by a principal executive or ranking elected official for a public agency.

PAPERWORK REDUCTION ACT NOTICE: The public reporting and recordkeeping burden for this collection of information is estimated to average between 6.0 and 7.9 hours per response, depending on the injection well class. Burden means the total time, effort, or financial resource expended by persons to generate, maintain, retain, or disclose or provide information to or for a Federal Agency. This includes the time needed to review instructions; develop, acquire, install, and utilize technology and systems for the purposes of collecting, validating, and verifying information, processing and maintaining information, and disclosing and providing information; adjust the existing ways to comply with any previously applicable instructions and requirements; train personnel to be able to respond to the collection of information; search data sources; complete and review the collection of information; and, transmit or otherwise disclose the information. An agency may not conduct or sponsor, and a person is not required to respond to, a collection of information unless it displays a currently valid OMB control number. Send comments on the Agency's need for this information, the accuracy of the provided burden estimates, and any suggested methods for minimizing respondent burden, including the use of automated collection techniques to Director, Collection Strategies Division, U.S. Environmental Protection Agency (2822), 1200 Pennsylvania Ave., NW., Washington, D.C. 20460. Include the OMB control number in any correspondence. Do not send the completed forms to this address.

AS-BUILT COREHOLE 93S

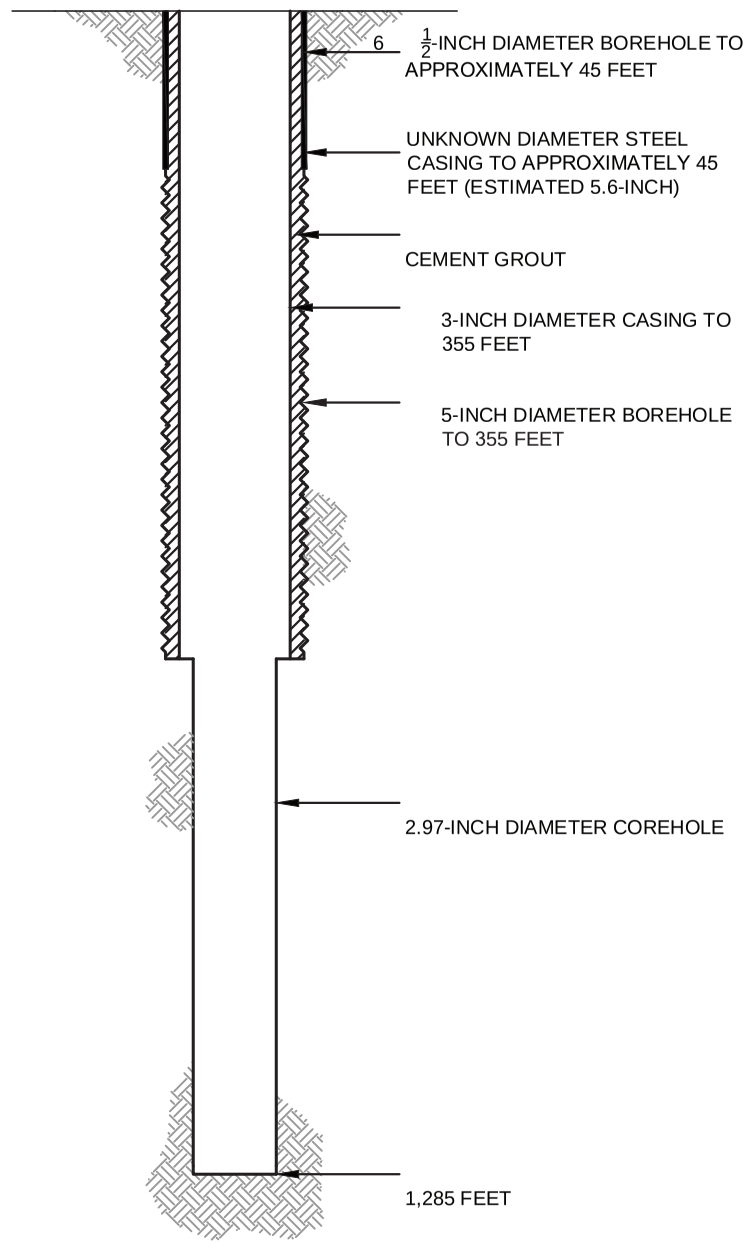

PROPOSED PLUGGING AND ABANDONMENT COREHOLE 93S

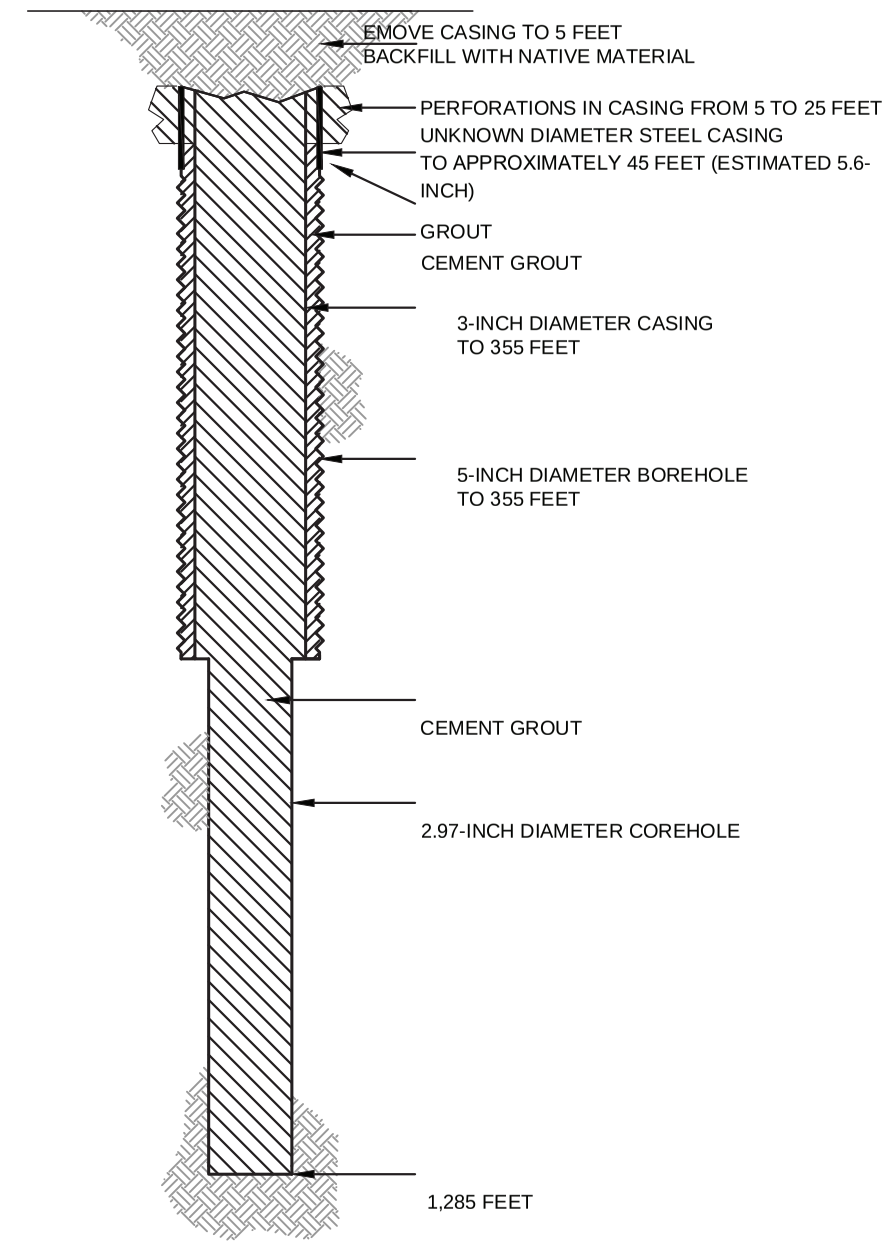

HALEY ALDRICH

FLORENCE COPPER, INC.
FLORENCE, ARIZONA

COREHOLE 93S DIAGRAM

FLORENCE COPPER INC.

NOT TO SCALE
SEPTEMBER 2019

FIGURE 1

MOBINI, GITA Printed: 4/21/2017 12:00 PM Layout: ABANDON (2)
\PROJECTS\CURIS RESOURCES38706-CURIS FEASIBILITY\DRAWINGS\EPA\WELL ABANDON\415S_ABANDON.DWG

OMB No. 2040-0042 Approval Expires 4/30/2022

United States Environmental Protection Agency

WELL REWORK RECORD, PLUGGING AND ABANDONMENT PLAN, OR PLUGGING AND ABANDONMENT AFFIDAVIT

Name and Address, Phone Number and/or Email of Permittee

Florence Copper Project
1575 W Hunt Hwy,
Florence, AZ 85132

Permit or EPA ID Number	API Number	Full Well Name
R9UIC-AZ3-FY11-1		96S

State	County
Arizona	Pinal

Locate well in two directions from nearest lines of quarter section and drilling unit

Latitude 33.05229753

Longitude -111.433817

Surface Location

NE **1/4 of** SW **1/4 of Section** 28 **Township** 4S **Range** 9E

_____ **ft. from (N/S)** _____ **Line of quarter section**

_____ **ft. from (E/W)** _____ **Line of quarter section.**

Well Class	Timing of Action (pick one)	Type of Action (pick one)
☐ Class I ☐ Class II ☑ Class III ☐ Class V	☑ Notice Prior to Work Date Expected to Commence March 2021 ☐ Report After Work Date Work Ended	☐ Well Rework ☑ Plugging and Abandonment ☐ Conversion to a Non-Injection Well

Provide a narrative description of the work planned to be performed, or that was performed. Use additional pages as necessary. See instructions.

A workover rig capable of performing the required abandonment operations at the required depths will be moved in and set up over the core hole. The core hole will be inspected to determine the depth to which the hole remains open and if any obstructions are present in the core hole; the presence and condition of any existing collar will also be documented. If necessary, the core hole will be cleaned out to a depth of at least 100 feet below the bedrock-LBFU contact to enable placement of cement seals.

If collar is present, an attempt will be made to remove it. If removal of the collar is not feasible, it will be left in the hole and perforated as needed to allow an annular seal to be placed to a depth of at least 25 feet bgs. In areas of agricultural use, the surface casing will be cut at least 5 feet bgs and removed.

If the collar cannot be removed, it will be perforated from at least 20 feet below the bedrock-LBFU contact to at least 20 feet above the contact; from at least 20 feet below the base of the MFGU to at least 20 feet above the top of the MFGU; and from at least 25 feet bgs to 5 feet bgs.

A tremie pipe will be used to place Type V cement in the open core hole from the bottom of the core hole to the top of the core hole. Cement retainers, as described above, will be used to force cement grout into the annulus and behind perforated intervals, as necessary.

If the hole has been obstructed, as much cement as possible will be placed from 100 feet below the LBFU-bedrock contact to the top of the core hole.

The volume of Type V cement will be recorded and will not be less than the estimated volume of material required to fill each interval. All cement grout will consist of Type V cement, or equivalent approved in accordance with the UIC Permit.

Certification

I certify under the penalty of law that I have personally examined and am familiar with the information submitted in this document and all attachments and that, based on my inquiry of those individuals immediately responsible for obtaining the information, I believe that the information is true, accurate, and complete. I am aware that there are significant penalties for submitting false information, including the possibliity of fine and imprisonment. (Ref. 40 CFR § 144.32)

Name and Official Title *(Please type or print)*	Signature	Date Signed
Dan Johnson, VP - General Manager		10/3/2019

INSTRUCTIONS FOR FORM 7520-19

This form replaces forms 7520-12 and 7520-14. Use this form only when work is planned or has occurred that affects the well's construction or operation as an injection well, including work on the casing, tubing or packer (or for shallow Class V wells, the subsurface fluid emplacement network). Use one form per injection well. While reports or other information developed by contractors or service companies may be attached, this form must be signed by a responsible entity as described at 40 CFR 144.32. Note: operators closing Class V wells should use Form 7520-17.

NAME, ADDRESS, PHONE AND/OR EMAIL OF PERMITTEE: Enter the name and street address, city/town, state, and ZIP code of the permittee. Also provide an email address (if available) and/or a phone number.

PERMIT OR EPA ID NUMBER: Enter the well identification number or permit number assigned to the well by the EPA or the permitting authority.

API NUMBER: Enter the number assigned by the local jurisdiction (usually a State Oil and Gas Agency) using the American Petroleum Institute standard numbering system.

FULL WELL NAME: Enter the full name of the well or project.

Enter the **STATE** and **COUNTY** where the well is located. For States that do not have counties, use the name of that State's equivalent jurisdiction at a more local level.

WELL LOCATION: Fill in the complete township, range, and section to the nearest quarter-quarter section. A township is north or south of the baseline, and a range is east or west of the principal meridian (e.g., T12N, R34W). Also include the distance, in feet, from the nearest north or south line and nearest east or west line of the quarter-section. Also, enter the **latitude** and **longitude** of the well in decimal degrees, to five or six places if possible; be sure to include a negative sign for the longitude of a well in the Western Hemisphere and a negative sign for the latitude of a well in the Southern Hemisphere.

Enter the **WELL CLASS,** i.e., the class of injection well as defined in 40 CFR 144.6.

TIMING OF THE ACTION: Check ***Notice prior to work*** if the activity has not yet occurred (i.e., is planned). Check ***Report after work*** if the activity described has already occurred. As appropriate, include the date the activity is expected to start or the date the activity was completed. (Note this may not be available, e.g., for a plugging plan submitted with a permit application.)

TYPE OF ACTION: Check the appropriate box to describe the kind of activity being reported. Check ***Well Rework*** for work that was/will be performed on the well after it has already been in operation as an injection well. Check ***Plugging and Abandonment*** to report on plans for or descriptions of final closure/plugging after use as an injection well. Check ***Conversion to a Non-Injection Well*** if the well is to be converted to something other than an injection well.

Provide a **NARRATIVE DESCRIPTION** of the work planned to be performed, or that was performed. The narrative should include a description of the main procedures planned or that occurred during the work activity. A service company report, daily report, or similar document may be attached if it includes all the requested information and is clear and legible.

For well reworks, include the following information: The reason for the well rework; depths of activity; type of activity; changes to injection well configuration, well casing, or cement behind casing; any plug added to the well and its depth; any newly drilled interval and its depth; method(s) to demonstrate that the well has mechanical integrity (as applicable); and any deviations from the approved rework plan (as applicable).

For a well plugging plan, include the following information: Reason for the well plugging; number of plugs placed, and their depths; materials used as plugs (e.g., cast iron bridge plug, cement, cement retainer); method to set plugs; and wait-on-cement times, if any. Also provide one or more cost estimates from an independent firm in the business of plugging and abandoning wells to plug the well as described in the plan.

For well plugging affidavit, include the following information: Reason for the well plugging; number of plugs placed, and their depths; materials used as plugs (e.g., cast iron bridge plug, cement, cement retainer); method to set plugs; wait-on-cement times, if any; and any deviations from the approved plugging plan (if applicable).

For conversion to a non-injection well, include the following information: Depths of activity; type of activity; changes to injection well configuration, well casing, or cement behind casing; any plug added to the well and its depth; any newly drilled interval and its depth; depths of new perforations; and method(s) to demonstrate that the well has mechanical integrity (as applicable).

For all of the above activities, include a well sketch depicting the work, results of well tests/logging performed, service company tickets, and any other available information demonstrating how the work was/is to be performed. Also, specify whether depths are below ground surface, relative to Kelly bushing, etc.

CERTIFICATION: This form must be signed and dated by either: a responsible corporate officer for a corporation, by a general partner for a partnership, by the proprietor of a sole proprietorship, or by a principal executive or ranking elected official for a public agency.

PAPERWORK REDUCTION ACT NOTICE: The public reporting and recordkeeping burden for this collection of information is estimated to average between 6.0 and 7.9 hours per response, depending on the injection well class. Burden means the total time, effort, or financial resource expended by persons to generate, maintain, retain, or disclose or provide information to or for a Federal Agency. This includes the time needed to review instructions; develop, acquire, install, and utilize technology and systems for the purposes of collecting, validating, and verifying information, processing and maintaining information, and disclosing and providing information; adjust the existing ways to comply with any previously applicable instructions and requirements; train personnel to be able to respond to the collection of information; search data sources; complete and review the collection of information; and, transmit or otherwise disclose the information. An agency may not conduct or sponsor, and a person is not required to respond to, a collection of information unless it displays a currently valid OMB control number. Send comments on the Agency's need for this information, the accuracy of the provided burden estimates, and any suggested methods for minimizing respondent burden, including the use of automated collection techniques to Director, Collection Strategies Division, U.S. Environmental Protection Agency (2822), 1200 Pennsylvania Ave., NW., Washington, D.C. 20460. Include the OMB control number in any correspondence. Do not send the completed forms to this address.

AS-BUILT COREHOLE 96S

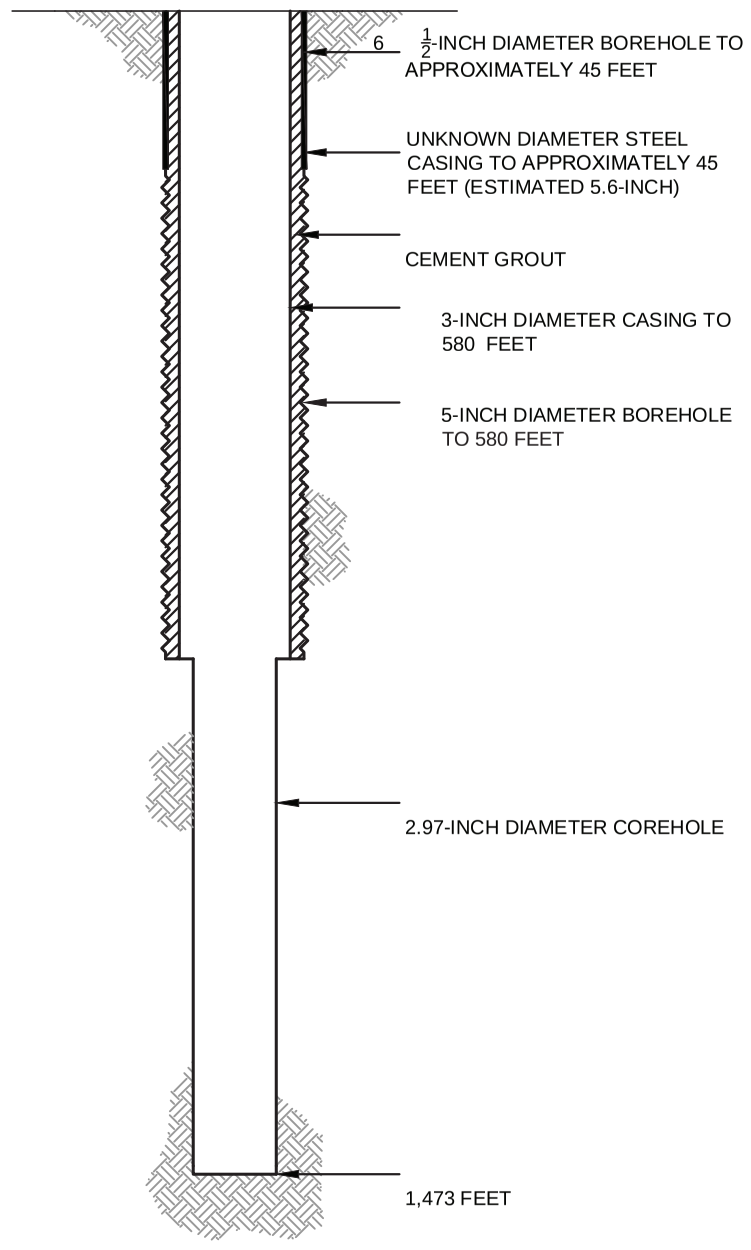

PROPOSED PLUGGING AND ABANDONMENT COREHOLE 96S

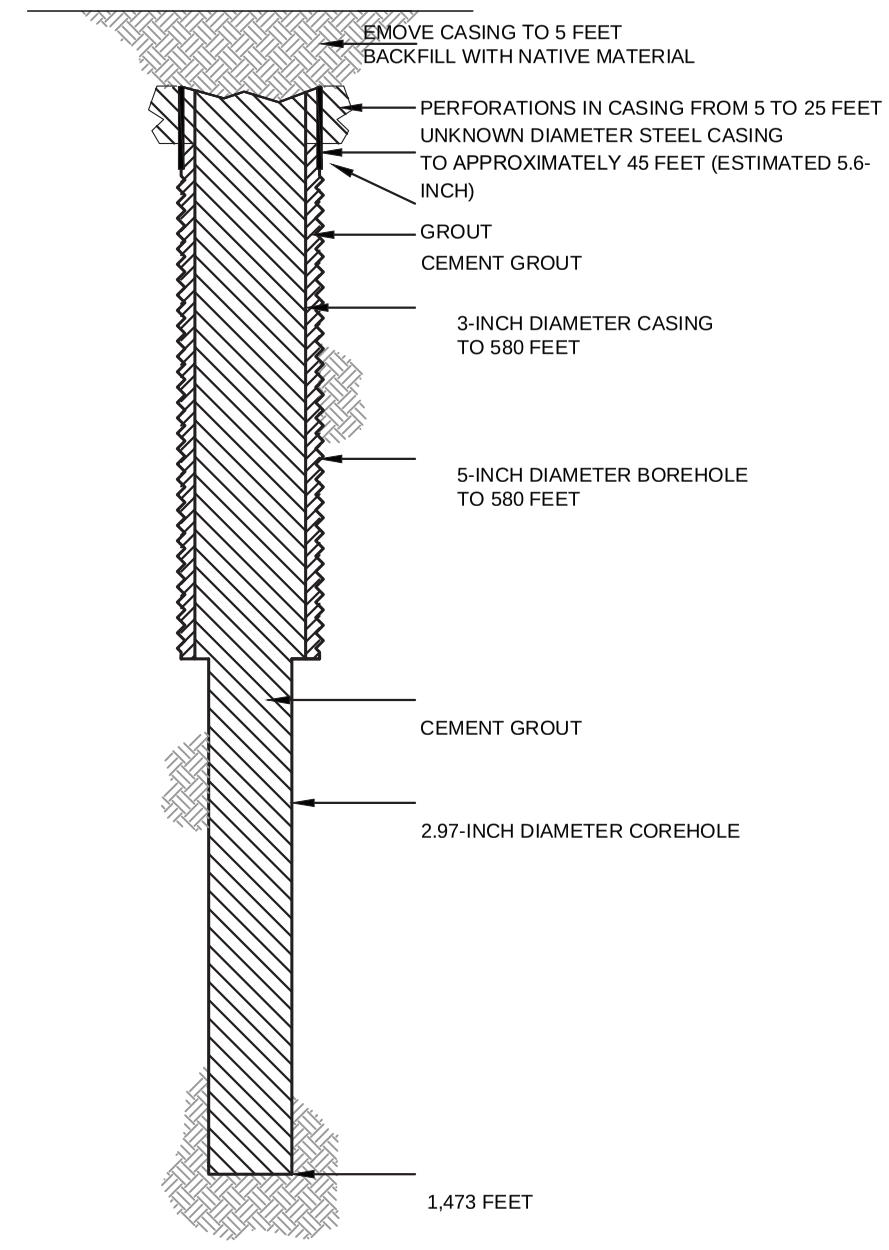

HALEY ALDRICH

FLORENCE COPPER, INC.
FLORENCE, ARIZONA

COREHOLE 96S DIAGRAM

FLORENCE COPPER INC.

NOT TO SCALE
SEPTEMBER 2019

FIGURE 1

MOBINI, GITA Printed: 4/21/2017 12:00 PM Layout: ABANDON (2)
\PROJECTS\CURIS RESOURCES38706-CURIS FEASIBILITY\DRAWINGS\EPA\WELL ABANDON\415S_ABANDON.DWG

OMB No. 2040-0042 Approval Expires 4/30/2022

United States Environmental Protection Agency

EPA

WELL REWORK RECORD, PLUGGING AND ABANDONMENT PLAN, OR PLUGGING AND ABANDONMENT AFFIDAVIT

Name and Address, Phone Number and/or Email of Permittee

Florence Copper Project
1575 W Hunt Hwy,
Florence, AZ 85132

Permit or EPA ID Number	API Number	Full Well Name
R9UIC-AZ3-FY11-1		97MF

State	County
Arizona	Pinal

Locate well in two directions from nearest lines of quarter section and drilling unit

Latitude 33.04381752

Surface Location

NE **1/4 of** NW **1/4 of Section** 33 **Township** 4S **Range** 9E

Longitude -111.4330419

_____ **ft. from (N/S)** _____ **Line of quarter section**

_____ **ft. from (E/W)** _____ **Line of quarter section.**

Well Class	Timing of Action (pick one)	Type of Action (pick one)
☐ Class I ☐ Class II ☑ Class III ☐ Class V	☑ Notice Prior to Work Date Expected to Commence March 2021 ☐ Report After Work Date Work Ended	☐ Well Rework ☑ Plugging and Abandonment ☐ Conversion to a Non-Injection Well

Provide a narrative description of the work planned to be performed, or that was performed. Use additional pages as necessary. See instructions.

A workover rig capable of performing the required abandonment operations at the required depths will be moved in and set up over the core hole. The core hole will be inspected to determine the depth to which the hole remains open and if any obstructions are present in the core hole; the presence and condition of any existing collar will also be documented. If necessary, the core hole will be cleaned out to a depth of at least 100 feet below the bedrock-LBFU contact to enable placement of cement seals.

If collar is present, an attempt will be made to remove it. If removal of the collar is not feasible, it will be left in the hole and perforated as needed to allow an annular seal to be placed to a depth of at least 25 feet bgs. In areas of agricultural use, the surface casing will be cut at least 5 feet bgs and removed.

If the collar cannot be removed, it will be perforated from at least 20 feet below the bedrock-LBFU contact to at least 20 feet above the contact; from at least 20 feet below the base of the MFGU to at least 20 feet above the top of the MFGU; and from at least 25 feet bgs to 5 feet bgs.

A tremie pipe will be used to place Type V cement in the open core hole from the bottom of the core hole to the top of the core hole. Cement retainers, as described above, will be used to force cement grout into the annulus and behind perforated intervals, as necessary.

If the hole has been obstructed, as much cement as possible will be placed from 100 feet below the LBFU-bedrock contact to the top of the core hole.

The volume of Type V cement will be recorded and will not be less than the estimated volume of material required to fill each interval. All cement grout will consist of Type V cement, or equivalent approved in accordance with the UIC Permit.

Certification

I certify under the penalty of law that I have personally examined and am familiar with the information submitted in this document and all attachments and that, based on my inquiry of those individuals immediately responsible for obtaining the information, I believe that the information is true, accurate, and complete. I am aware that there are significant penalties for submitting false information, including the possibliity of fine and imprisonment. (Ref. 40 CFR § 144.32)

Name and Official Title *(Please type or print)*	Signature	Date Signed
Dan Johnson, VP - General Manager		10/3/2019

INSTRUCTIONS FOR FORM 7520-19

This form replaces forms 7520-12 and 7520-14. Use this form only when work is planned or has occurred that affects the well's construction or operation as an injection well, including work on the casing, tubing or packer (or for shallow Class V wells, the subsurface fluid emplacement network). Use one form per injection well. While reports or other information developed by contractors or service companies may be attached, this form must be signed by a responsible entity as described at 40 CFR 144.32. Note: operators closing Class V wells should use Form 7520-17.

NAME, ADDRESS, PHONE AND/OR EMAIL OF PERMITTEE: Enter the name and street address, city/town, state, and ZIP code of the permittee. Also provide an email address (if available) and/or a phone number.

PERMIT OR EPA ID NUMBER: Enter the well identification number or permit number assigned to the well by the EPA or the permitting authority.

API NUMBER: Enter the number assigned by the local jurisdiction (usually a State Oil and Gas Agency) using the American Petroleum Institute standard numbering system.

FULL WELL NAME: Enter the full name of the well or project.

Enter the **STATE** and **COUNTY** where the well is located. For States that do not have counties, use the name of that State's equivalent jurisdiction at a more local level.

WELL LOCATION: Fill in the complete township, range, and section to the nearest quarter-quarter section. A township is north or south of the baseline, and a range is east or west of the principal meridian (e.g., T12N, R34W). Also include the distance, in feet, from the nearest north or south line and nearest east or west line of the quarter-section. Also, enter the **latitude** and **longitude** of the well in decimal degrees, to five or six places if possible; be sure to include a negative sign for the longitude of a well in the Western Hemisphere and a negative sign for the latitude of a well in the Southern Hemisphere.

Enter the **WELL CLASS,** i.e., the class of injection well as defined in 40 CFR 144.6.

TIMING OF THE ACTION: Check ***Notice prior to work*** if the activity has not yet occurred (i.e., is planned). Check ***Report after work*** if the activity described has already occurred. As appropriate, include the date the activity is expected to start or the date the activity was completed. (Note this may not be available, e.g., for a plugging plan submitted with a permit application.)

TYPE OF ACTION: Check the appropriate box to describe the kind of activity being reported. Check ***Well Rework*** for work that was/will be performed on the well after it has already been in operation as an injection well. Check ***Plugging and Abandonment*** to report on plans for or descriptions of final closure/plugging after use as an injection well. Check ***Conversion to a Non-Injection Well*** if the well is to be converted to something other than an injection well.

Provide a **NARRATIVE DESCRIPTION** of the work planned to be performed, or that was performed. The narrative should include a description of the main procedures planned or that occurred during the work activity. A service company report, daily report, or similar document may be attached if it includes all the requested information and is clear and legible.

For well reworks, include the following information: The reason for the well rework; depths of activity; type of activity; changes to injection well configuration, well casing, or cement behind casing; any plug added to the well and its depth; any newly drilled interval and its depth; method(s) to demonstrate that the well has mechanical integrity (as applicable); and any deviations from the approved rework plan (as applicable).

For a well plugging plan, include the following information: Reason for the well plugging; number of plugs placed, and their depths; materials used as plugs (e.g., cast iron bridge plug, cement, cement retainer); method to set plugs; and wait-on-cement times, if any. Also provide one or more cost estimates from an independent firm in the business of plugging and abandoning wells to plug the well as described in the plan.

For well plugging affidavit, include the following information: Reason for the well plugging; number of plugs placed, and their depths; materials used as plugs (e.g., cast iron bridge plug, cement, cement retainer); method to set plugs; wait-on-cement times, if any; and any deviations from the approved plugging plan (if applicable).

For conversion to a non-injection well, include the following information: Depths of activity; type of activity; changes to injection well configuration, well casing, or cement behind casing; any plug added to the well and its depth; any newly drilled interval and its depth; depths of new perforations; and method(s) to demonstrate that the well has mechanical integrity (as applicable).

For all of the above activities, include a well sketch depicting the work, results of well tests/logging performed, service company tickets, and any other available information demonstrating how the work was/is to be performed. Also, specify whether depths are below ground surface, relative to Kelly bushing, etc.

CERTIFICATION: This form must be signed and dated by either: a responsible corporate officer for a corporation, by a general partner for a partnership, by the proprietor of a sole proprietorship, or by a principal executive or ranking elected official for a public agency.

PAPERWORK REDUCTION ACT NOTICE: The public reporting and recordkeeping burden for this collection of information is estimated to average between 6.0 and 7.9 hours per response, depending on the injection well class. Burden means the total time, effort, or financial resource expended by persons to generate, maintain, retain, or disclose or provide information to or for a Federal Agency. This includes the time needed to review instructions; develop, acquire, install, and utilize technology and systems for the purposes of collecting, validating, and verifying information, processing and maintaining information, and disclosing and providing information; adjust the existing ways to comply with any previously applicable instructions and requirements; train personnel to be able to respond to the collection of information; search data sources; complete and review the collection of information; and, transmit or otherwise disclose the information. An agency may not conduct or sponsor, and a person is not required to respond to, a collection of information unless it displays a currently valid OMB control number. Send comments on the Agency's need for this information, the accuracy of the provided burden estimates, and any suggested methods for minimizing respondent burden, including the use of automated collection techniques to Director, Collection Strategies Division, U.S. Environmental Protection Agency (2822), 1200 Pennsylvania Ave., NW., Washington, D.C. 20460. Include the OMB control number in any correspondence. Do not send the completed forms to this address.

AS-BUILT COREHOLE 97MF

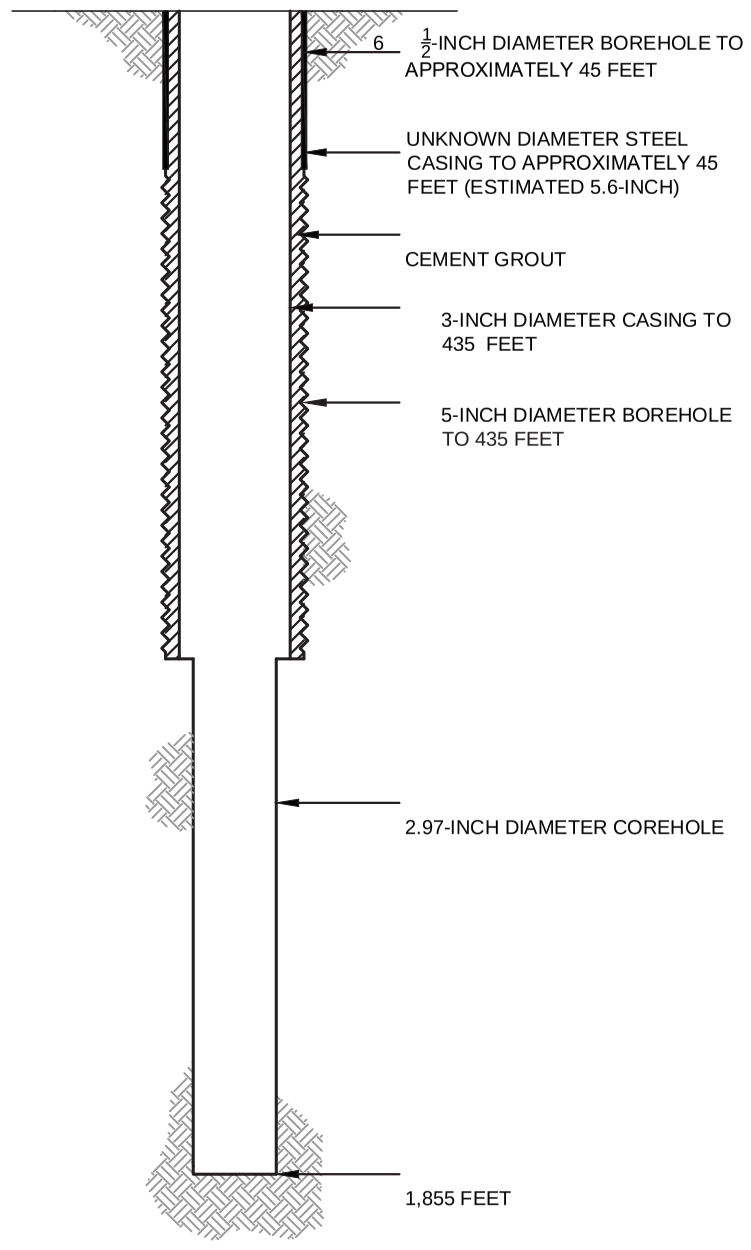

PROPOSED PLUGGING AND ABANDONMENT COREHOLE 97MF

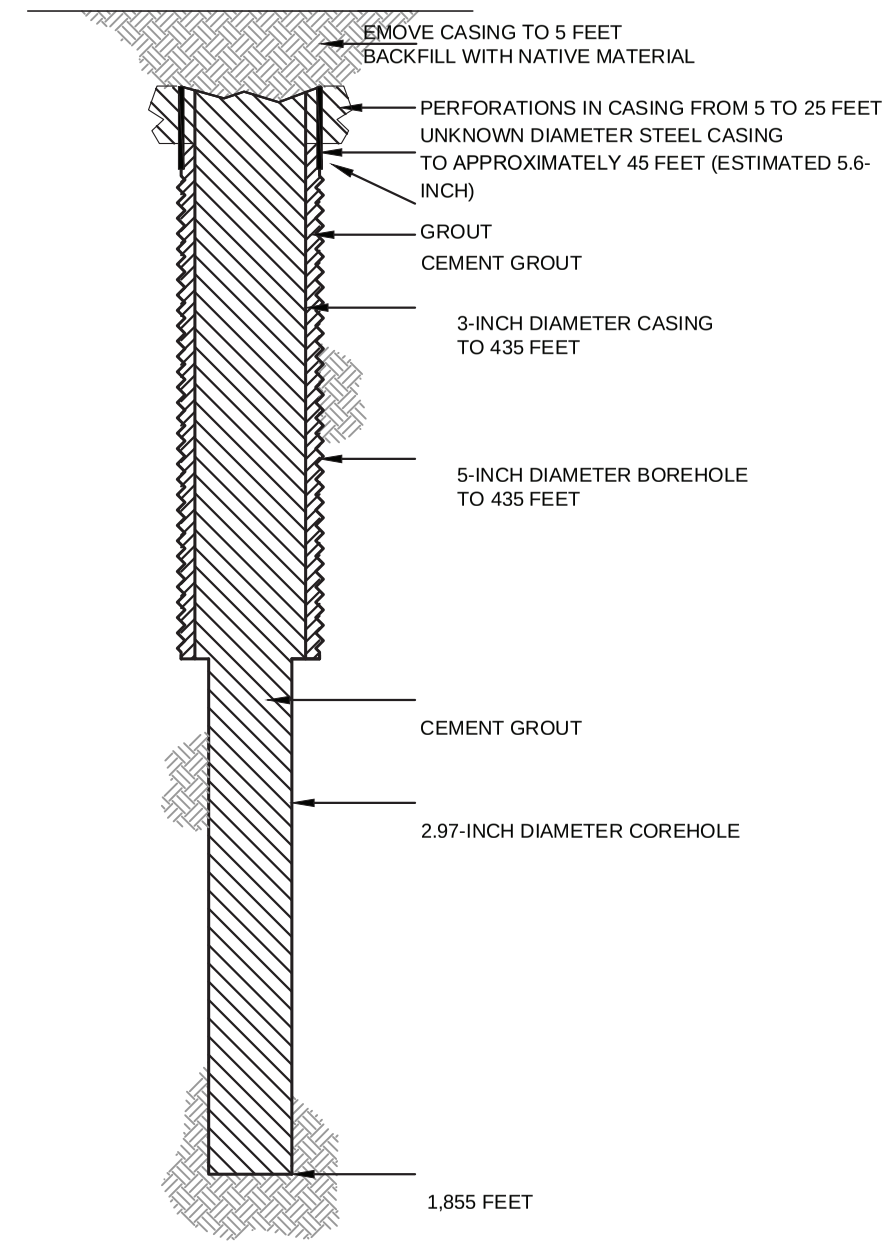

HALEY ALDRICH

FLORENCE COPPER, INC.
FLORENCE, ARIZONA

COREHOLE 97MF DIAGRAM

FLORENCE COPPER INC.

NOT TO SCALE
SEPTEMBER 2019

FIGURE 1

MOBINI, GITA Printed: 4/21/2017 12:00 PM Layout: ABANDON (2)
\PROJECTS\CURIS RESOURCES38706-CURIS FEASIBILITY\DRAWINGS\EPA\WELL ABANDON\415S_ABANDON.DWG

OMB No. 2040-0042 Approval Expires 4/30/2022

United States Environmental Protection Agency

EPA

WELL REWORK RECORD, PLUGGING AND ABANDONMENT PLAN, OR PLUGGING AND ABANDONMENT AFFIDAVIT

Name and Address, Phone Number and/or Email of Permittee

Florence Copper Project
1575 W Hunt Hwy,
Florence, AZ 85132

Permit or EPA ID Number	API Number	Full Well Name
R9UIC-AZ3-FY11-1		100MF

State	County
Arizona	Pinal

Locate well in two directions from nearest lines of quarter section and drilling unit

Surface Location

NE 1/4 of NW 1/4 of Section 33 Township 4S Range 9E

Latitude 33.04500394

Longitude -111.4322209

ft. from (N/S) Line of quarter section

ft. from (E/W) Line of quarter section.

Well Class	Timing of Action (pick one)	Type of Action (pick one)
☐ Class I ☐ Class II ☑ Class III ☐ Class V	☑ Notice Prior to Work Date Expected to Commence March 2021 ☐ Report After Work Date Work Ended	☐ Well Rework ☑ Plugging and Abandonment ☐ Conversion to a Non-Injection Well

Provide a narrative description of the work planned to be performed, or that was performed. Use additional pages as necessary. See instructions.

A workover rig capable of performing the required abandonment operations at the required depths will be moved in and set up over the core hole. The core hole will be inspected to determine the depth to which the hole remains open and if any obstructions are present in the core hole; the presence and condition of any existing collar will also be documented. If necessary, the core hole will be cleaned out to a depth of at least 100 feet below the bedrock-LBFU contact to enable placement of cement seals.

If collar is present, an attempt will be made to remove it. If removal of the collar is not feasible, it will be left in the hole and perforated as needed to allow an annular seal to be placed to a depth of at least 25 feet bgs. In areas of agricultural use, the surface casing will be cut at least 5 feet bgs and removed.

If the collar cannot be removed, it will be perforated from at least 20 feet below the bedrock-LBFU contact to at least 20 feet above the contact; from at least 20 feet below the base of the MFGU to at least 20 feet above the top of the MFGU; and from at least 25 feet bgs to 5 feet bgs.

A tremie pipe will be used to place Type V cement in the open core hole from the bottom of the core hole to the top of the core hole. Cement retainers, as described above, will be used to force cement grout into the annulus and behind perforated intervals, as necessary.

If the hole has been obstructed, as much cement as possible will be placed from 100 feet below the LBFU-bedrock contact to the top of the core hole.

The volume of Type V cement will be recorded and will not be less than the estimated volume of material required to fill each interval. All cement grout will consist of Type V cement, or equivalent approved in accordance with the UIC Permit.

Certification

I certify under the penalty of law that I have personally examined and am familiar with the information submitted in this document and all attachments and that, based on my inquiry of those individuals immediately responsible for obtaining the information, I believe that the information is true, accurate, and complete. I am aware that there are significant penalties for submitting false information, including the possibliity of fine and imprisonment. (Ref. 40 CFR § 144.32)

Name and Official Title *(Please type or print)*	Signature	Date Signed
Dan Johnson, VP - General Manager		10/3/2019

INSTRUCTIONS FOR FORM 7520-19

This form replaces forms 7520-12 and 7520-14. Use this form only when work is planned or has occurred that affects the well's construction or operation as an injection well, including work on the casing, tubing or packer (or for shallow Class V wells, the subsurface fluid emplacement network). Use one form per injection well. While reports or other information developed by contractors or service companies may be attached, this form must be signed by a responsible entity as described at 40 CFR 144.32. Note: operators closing Class V wells should use Form 7520-17.

NAME, ADDRESS, PHONE AND/OR EMAIL OF PERMITTEE: Enter the name and street address, city/town, state, and ZIP code of the permittee. Also provide an email address (if available) and/or a phone number.

PERMIT OR EPA ID NUMBER: Enter the well identification number or permit number assigned to the well by the EPA or the permitting authority.

API NUMBER: Enter the number assigned by the local jurisdiction (usually a State Oil and Gas Agency) using the American Petroleum Institute standard numbering system.

FULL WELL NAME: Enter the full name of the well or project.

Enter the **STATE** and **COUNTY** where the well is located. For States that do not have counties, use the name of that State's equivalent jurisdiction at a more local level.

WELL LOCATION: Fill in the complete township, range, and section to the nearest quarter-quarter section. A township is north or south of the baseline, and a range is east or west of the principal meridian (e.g., T12N, R34W). Also include the distance, in feet, from the nearest north or south line and nearest east or west line of the quarter-section. Also, enter the **latitude** and **longitude** of the well in decimal degrees, to five or six places if possible; be sure to include a negative sign for the longitude of a well in the Western Hemisphere and a negative sign for the latitude of a well in the Southern Hemisphere.

Enter the **WELL CLASS,** i.e., the class of injection well as defined in 40 CFR 144.6.

TIMING OF THE ACTION: Check ***Notice prior to work*** if the activity has not yet occurred (i.e., is planned). Check ***Report after work*** if the activity described has already occurred. As appropriate, include the date the activity is expected to start or the date the activity was completed. (Note this may not be available, e.g., for a plugging plan submitted with a permit application.)

TYPE OF ACTION: Check the appropriate box to describe the kind of activity being reported. Check ***Well Rework*** for work that was/will be performed on the well after it has already been in operation as an injection well. Check ***Plugging and Abandonment*** to report on plans for or descriptions of final closure/plugging after use as an injection well. Check ***Conversion to a Non-Injection Well*** if the well is to be converted to something other than an injection well.

Provide a **NARRATIVE DESCRIPTION** of the work planned to be performed, or that was performed. The narrative should include a description of the main procedures planned or that occurred during the work activity. A service company report, daily report, or similar document may be attached if it includes all the requested information and is clear and legible.

For well reworks, include the following information: The reason for the well rework; depths of activity; type of activity; changes to injection well configuration, well casing, or cement behind casing; any plug added to the well and its depth; any newly drilled interval and its depth; method(s) to demonstrate that the well has mechanical integrity (as applicable); and any deviations from the approved rework plan (as applicable).

For a well plugging plan, include the following information: Reason for the well plugging; number of plugs placed, and their depths; materials used as plugs (e.g., cast iron bridge plug, cement, cement retainer); method to set plugs; and wait-on-cement times, if any. Also provide one or more cost estimates from an independent firm in the business of plugging and abandoning wells to plug the well as described in the plan.

For well plugging affidavit, include the following information: Reason for the well plugging; number of plugs placed, and their depths; materials used as plugs (e.g., cast iron bridge plug, cement, cement retainer); method to set plugs; wait-on-cement times, if any; and any deviations from the approved plugging plan (if applicable).

For conversion to a non-injection well, include the following information: Depths of activity; type of activity; changes to injection well configuration, well casing, or cement behind casing; any plug added to the well and its depth; any newly drilled interval and its depth; depths of new perforations; and method(s) to demonstrate that the well has mechanical integrity (as applicable).

For all of the above activities, include a well sketch depicting the work, results of well tests/logging performed, service company tickets, and any other available information demonstrating how the work was/is to be performed. Also, specify whether depths are below ground surface, relative to Kelly bushing, etc.

CERTIFICATION: This form must be signed and dated by either: a responsible corporate officer for a corporation, by a general partner for a partnership, by the proprietor of a sole proprietorship, or by a principal executive or ranking elected official for a public agency.

PAPERWORK REDUCTION ACT NOTICE: The public reporting and recordkeeping burden for this collection of information is estimated to average between 6.0 and 7.9 hours per response, depending on the injection well class. Burden means the total time, effort, or financial resource expended by persons to generate, maintain, retain, or disclose or provide information to or for a Federal Agency. This includes the time needed to review instructions; develop, acquire, install, and utilize technology and systems for the purposes of collecting, validating, and verifying information, processing and maintaining information, and disclosing and providing information; adjust the existing ways to comply with any previously applicable instructions and requirements; train personnel to be able to respond to the collection of information; search data sources; complete and review the collection of information; and, transmit or otherwise disclose the information. An agency may not conduct or sponsor, and a person is not required to respond to, a collection of information unless it displays a currently valid OMB control number. Send comments on the Agency's need for this information, the accuracy of the provided burden estimates, and any suggested methods for minimizing respondent burden, including the use of automated collection techniques to Director, Collection Strategies Division, U.S. Environmental Protection Agency (2822), 1200 Pennsylvania Ave., NW., Washington, D.C. 20460. Include the OMB control number in any correspondence. Do not send the completed forms to this address.

AS-BUILT COREHOLE 100MF

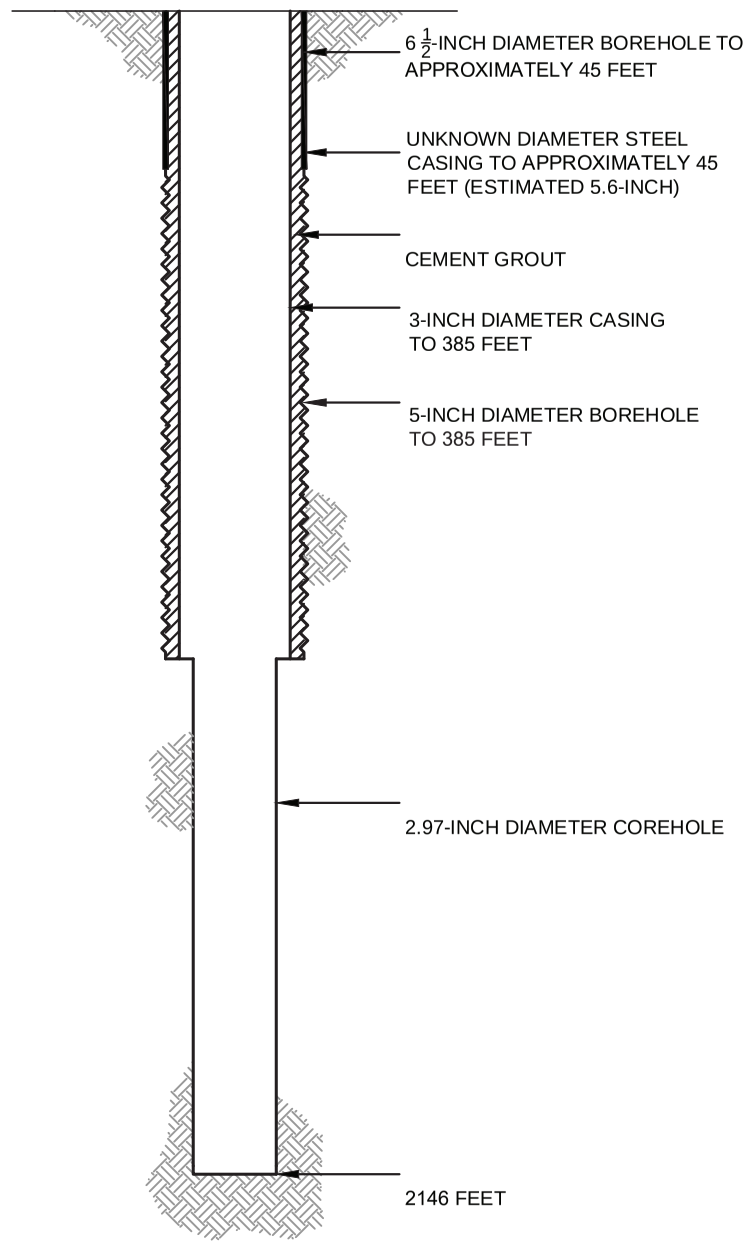

PROPOSED PLUGGING AND ABANDONMENT COREHOLE 100MF

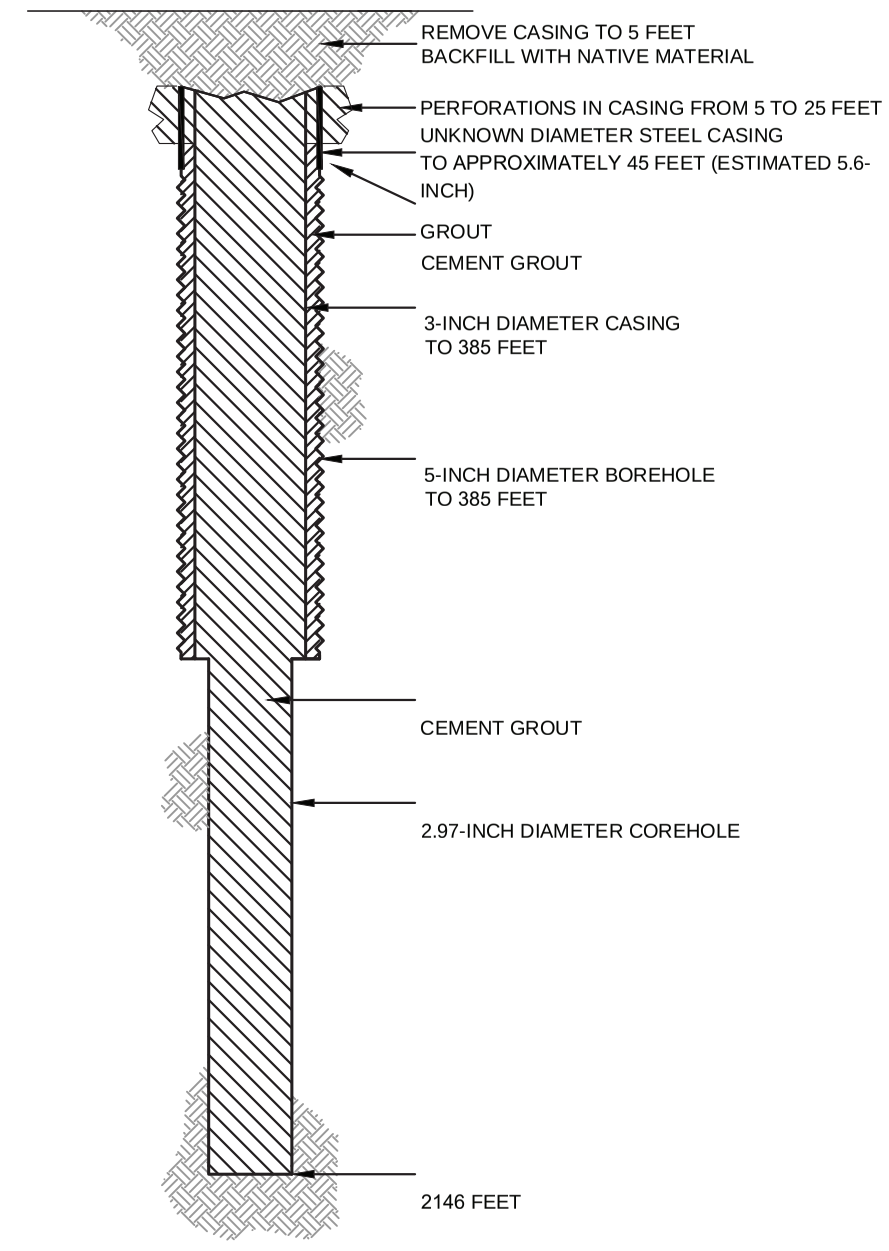

HALEY ALDRICH

FLORENCE COPPER, INC.
FLORENCE, ARIZONA

COREHOLE 100MF DIAGRAM

FLORENCE COPPER INC.

NOT TO SCALE
SEPTEMBER 2019

FIGURE 1

MOBINI, GITA Printed: 4/21/2017 12:00 PM Layout: ABANDON (2)
G:\PROJECTS\CURIS RESOURCES\38706-CURIS FEASIBILITY\DRAWINGS\EPA\WELL ABANDON\415S_ABANDON.DWG

OMB No. 2040-0042 Approval Expires 4/30/2022

United States Environmental Protection Agency

WELL REWORK RECORD, PLUGGING AND ABANDONMENT PLAN, OR PLUGGING AND ABANDONMENT AFFIDAVIT

Name and Address, Phone Number and/or Email of Permittee

Florence Copper Project
1575 W Hunt Hwy,
Florence, AZ 85132

Permit or EPA ID Number	API Number	Full Well Name
R9UIC-AZ3-FY11-1		105MF

State	County
Arizona	Pinal

Locate well in two directions from nearest lines of quarter section and drilling unit

Surface Location

SW 1/4 of SE 1/4 of Section 28 Township 4S Range 9E

Latitude 33.04856067

Longitude -111.4297554

ft. from (N/S) Line of quarter section

ft. from (E/W) Line of quarter section.

Well Class	Timing of Action (pick one)	Type of Action (pick one)
☐ Class I ☐ Class II ☑ Class III ☐ Class V	☑ Notice Prior to Work Date Expected to Commence March 2021 ☐ Report After Work Date Work Ended	☐ Well Rework ☑ Plugging and Abandonment ☐ Conversion to a Non-Injection Well

Provide a narrative description of the work planned to be performed, or that was performed. Use additional pages as necessary. See instructions.

A workover rig capable of performing the required abandonment operations at the required depths will be moved in and set up over the core hole. The core hole will be inspected to determine the depth to which the hole remains open and if any obstructions are present in the core hole; the presence and condition of any existing collar will also be documented. If necessary, the core hole will be cleaned out to a depth of at least 100 feet below the bedrock-LBFU contact to enable placement of cement seals.

If collar is present, an attempt will be made to remove it. If removal of the collar is not feasible, it will be left in the hole and perforated as needed to allow an annular seal to be placed to a depth of at least 25 feet bgs. In areas of agricultural use, the surface casing will be cut at least 5 feet bgs and removed.

If the collar cannot be removed, it will be perforated from at least 20 feet below the bedrock-LBFU contact to at least 20 feet above the contact; from at least 20 feet below the base of the MFGU to at least 20 feet above the top of the MFGU; and from at least 25 feet bgs to 5 feet bgs.

A tremie pipe will be used to place Type V cement in the open core hole from the bottom of the core hole to the top of the core hole. Cement retainers, as described above, will be used to force cement grout into the annulus and behind perforated intervals, as necessary.

If the hole has been obstructed, as much cement as possible will be placed from 100 feet below the LBFU-bedrock contact to the top of the core hole.

The volume of Type V cement will be recorded and will not be less than the estimated volume of material required to fill each interval. All cement grout will consist of Type V cement, or equivalent approved in accordance with the UIC Permit.

Certification

I certify under the penalty of law that I have personally examined and am familiar with the information submitted in this document and all attachments and that, based on my inquiry of those individuals immediately responsible for obtaining the information, I believe that the information is true, accurate, and complete. I am aware that there are significant penalties for submitting false information, including the possibliity of fine and imprisonment. (Ref. 40 CFR § 144.32)

Name and Official Title *(Please type or print)*	Signature	Date Signed
Dan Johnson, VP - General Manager		10/3/2019

INSTRUCTIONS FOR FORM 7520-19

This form replaces forms 7520-12 and 7520-14. Use this form only when work is planned or has occurred that affects the well's construction or operation as an injection well, including work on the casing, tubing or packer (or for shallow Class V wells, the subsurface fluid emplacement network). Use one form per injection well. While reports or other information developed by contractors or service companies may be attached, this form must be signed by a responsible entity as described at 40 CFR 144.32. Note: operators closing Class V wells should use Form 7520-17.

NAME, ADDRESS, PHONE AND/OR EMAIL OF PERMITTEE: Enter the name and street address, city/town, state, and ZIP code of the permittee. Also provide an email address (if available) and/or a phone number.

PERMIT OR EPA ID NUMBER: Enter the well identification number or permit number assigned to the well by the EPA or the permitting authority.

API NUMBER: Enter the number assigned by the local jurisdiction (usually a State Oil and Gas Agency) using the American Petroleum Institute standard numbering system.

FULL WELL NAME: Enter the full name of the well or project.

Enter the **STATE** and **COUNTY** where the well is located. For States that do not have counties, use the name of that State's equivalent jurisdiction at a more local level.

WELL LOCATION: Fill in the complete township, range, and section to the nearest quarter-quarter section. A township is north or south of the baseline, and a range is east or west of the principal meridian (e.g., T12N, R34W). Also include the distance, in feet, from the nearest north or south line and nearest east or west line of the quarter-section. Also, enter the **latitude** and **longitude** of the well in decimal degrees, to five or six places if possible; be sure to include a negative sign for the longitude of a well in the Western Hemisphere and a negative sign for the latitude of a well in the Southern Hemisphere.

Enter the **WELL CLASS,** i.e., the class of injection well as defined in 40 CFR 144.6.

TIMING OF THE ACTION: Check ***Notice prior to work*** if the activity has not yet occurred (i.e., is planned). Check ***Report after work*** if the activity described has already occurred. As appropriate, include the date the activity is expected to start or the date the activity was completed. (Note this may not be available, e.g., for a plugging plan submitted with a permit application.)

TYPE OF ACTION: Check the appropriate box to describe the kind of activity being reported. Check ***Well Rework*** for work that was/will be performed on the well after it has already been in operation as an injection well. Check ***Plugging and Abandonment*** to report on plans for or descriptions of final closure/plugging after use as an injection well. Check ***Conversion to a Non-Injection Well*** if the well is to be converted to something other than an injection well.

Provide a **NARRATIVE DESCRIPTION** of the work planned to be performed, or that was performed. The narrative should include a description of the main procedures planned or that occurred during the work activity. A service company report, daily report, or similar document may be attached if it includes all the requested information and is clear and legible.

For well reworks, include the following information: The reason for the well rework; depths of activity; type of activity; changes to injection well configuration, well casing, or cement behind casing; any plug added to the well and its depth; any newly drilled interval and its depth; method(s) to demonstrate that the well has mechanical integrity (as applicable); and any deviations from the approved rework plan (as applicable).

For a well plugging plan, include the following information: Reason for the well plugging; number of plugs placed, and their depths; materials used as plugs (e.g., cast iron bridge plug, cement, cement retainer); method to set plugs; and wait-on-cement times, if any. Also provide one or more cost estimates from an independent firm in the business of plugging and abandoning wells to plug the well as described in the plan.

For well plugging affidavit, include the following information: Reason for the well plugging; number of plugs placed, and their depths; materials used as plugs (e.g., cast iron bridge plug, cement, cement retainer); method to set plugs; wait-on-cement times, if any; and any deviations from the approved plugging plan (if applicable).

For conversion to a non-injection well, include the following information: Depths of activity; type of activity; changes to injection well configuration, well casing, or cement behind casing; any plug added to the well and its depth; any newly drilled interval and its depth; depths of new perforations; and method(s) to demonstrate that the well has mechanical integrity (as applicable).

For all of the above activities, include a well sketch depicting the work, results of well tests/logging performed, service company tickets, and any other available information demonstrating how the work was/is to be performed. Also, specify whether depths are below ground surface, relative to Kelly bushing, etc.

CERTIFICATION: This form must be signed and dated by either: a responsible corporate officer for a corporation, by a general partner for a partnership, by the proprietor of a sole proprietorship, or by a principal executive or ranking elected official for a public agency.

PAPERWORK REDUCTION ACT NOTICE: The public reporting and recordkeeping burden for this collection of information is estimated to average between 6.0 and 7.9 hours per response, depending on the injection well class. Burden means the total time, effort, or financial resource expended by persons to generate, maintain, retain, or disclose or provide information to or for a Federal Agency. This includes the time needed to review instructions; develop, acquire, install, and utilize technology and systems for the purposes of collecting, validating, and verifying information, processing and maintaining information, and disclosing and providing information; adjust the existing ways to comply with any previously applicable instructions and requirements; train personnel to be able to respond to the collection of information; search data sources; complete and review the collection of information; and, transmit or otherwise disclose the information. An agency may not conduct or sponsor, and a person is not required to respond to, a collection of information unless it displays a currently valid OMB control number. Send comments on the Agency's need for this information, the accuracy of the provided burden estimates, and any suggested methods for minimizing respondent burden, including the use of automated collection techniques to Director, Collection Strategies Division, U.S. Environmental Protection Agency (2822), 1200 Pennsylvania Ave., NW., Washington, D.C. 20460. Include the OMB control number in any correspondence. Do not send the completed forms to this address.

AS-BUILT COREHOLE 105MF

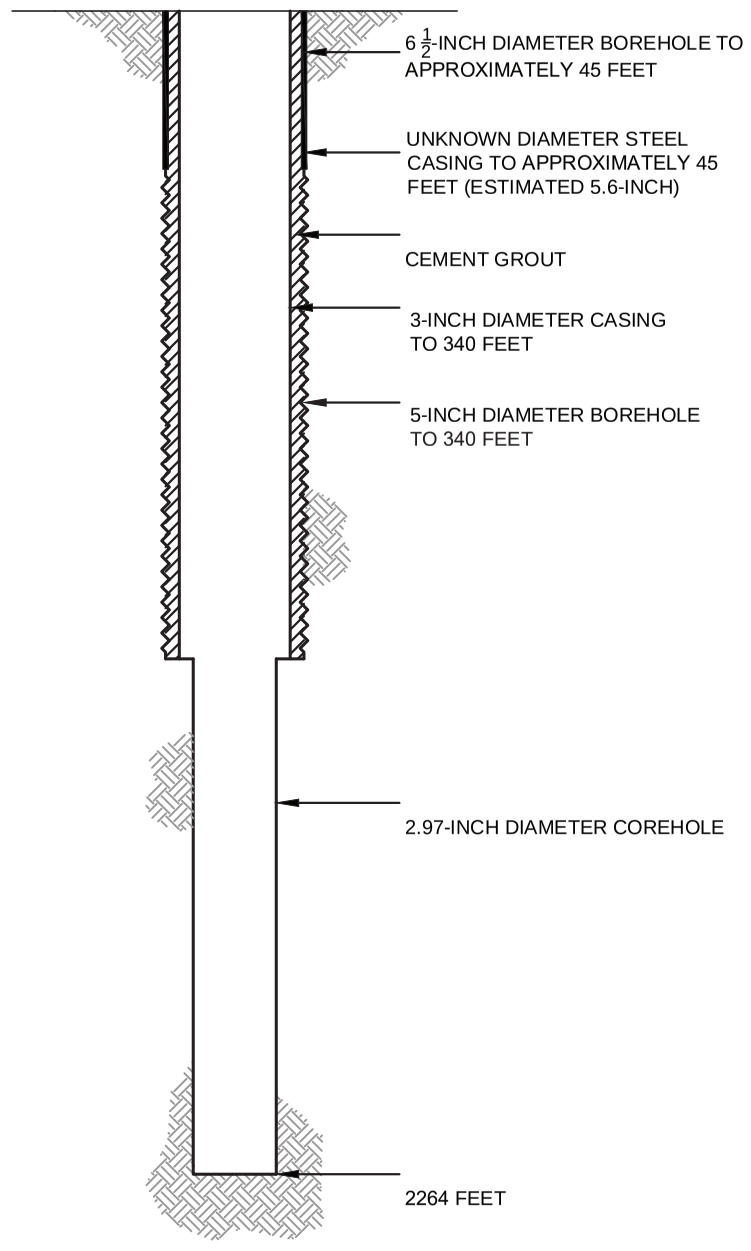

PROPOSED PLUGGING AND ABANDONMENT COREHOLE 105MF

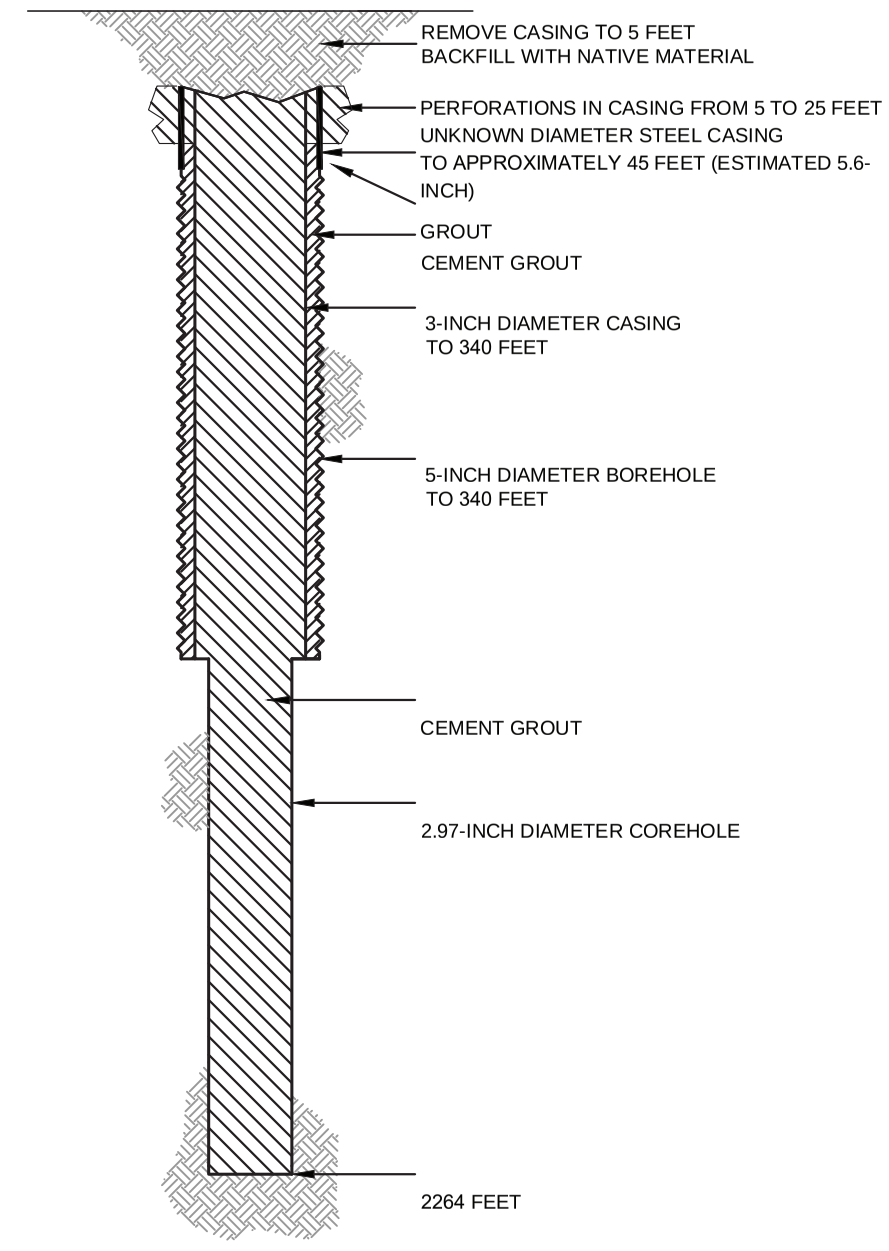

HALEY ALDRICH

FLORENCE COPPER, INC.
FLORENCE, ARIZONA

COREHOLE 105MF DIAGRAM

FLORENCE COPPER INC.

NOT TO SCALE
SEPTEMBER 2019

FIGURE 1

MOBINI, GITA Printed: 4/21/2017 12:00 PM Layout: ABANDON (2)
G:\PROJECTS\CURIS RESOURCES\38706-CURIS FEASIBILITY\DRAWINGS\EPA\WELL ABANDON\415S_ABANDON.DWG

OMB No. 2040-0042 Approval Expires 4/30/2022

United States Environmental Protection Agency

WELL REWORK RECORD, PLUGGING AND ABANDONMENT PLAN, OR PLUGGING AND ABANDONMENT AFFIDAVIT

Name and Address, Phone Number and/or Email of Permittee

Florence Copper Project
1575 W Hunt Hwy,
Florence, AZ 85132

Permit or EPA ID Number	API Number	Full Well Name
R9UIC-AZ3-FY11-1		106MF

State	County
Arizona	Pinal

Locate well in two directions from nearest lines of quarter section and drilling unit

Surface Location

SW 1/4 of SE 1/4 of Section 28 Township 4S Range 9E

Latitude 33.04618096

Longitude -111.429767182

ft. from (N/S) Line of quarter section

ft. from (E/W) Line of quarter section.

Well Class	Timing of Action (pick one)	Type of Action (pick one)
☐ Class I ☐ Class II ☑ Class III ☐ Class V	☑ Notice Prior to Work Date Expected to Commence March 2021 ☐ Report After Work Date Work Ended	☐ Well Rework ☑ Plugging and Abandonment ☐ Conversion to a Non-Injection Well

Provide a narrative description of the work planned to be performed, or that was performed. Use additional pages as necessary. See instructions.

A workover rig capable of performing the required abandonment operations at the required depths will be moved in and set up over the core hole. The core hole will be inspected to determine the depth to which the hole remains open and if any obstructions are present in the core hole; the presence and condition of any existing collar will also be documented. If necessary, the core hole will be cleaned out to a depth of at least 100 feet below the bedrock-LBFU contact to enable placement of cement seals.

If collar is present, an attempt will be made to remove it. If removal of the collar is not feasible, it will be left in the hole and perforated as needed to allow an annular seal to be placed to a depth of at least 25 feet bgs. In areas of agricultural use, the surface casing will be cut at least 5 feet bgs and removed.

If the collar cannot be removed, it will be perforated from at least 20 feet below the bedrock-LBFU contact to at least 20 feet above the contact; from at least 20 feet below the base of the MFGU to at least 20 feet above the top of the MFGU; and from at least 25 feet bgs to 5 feet bgs.

A tremie pipe will be used to place Type V cement in the open core hole from the bottom of the core hole to the top of the core hole. Cement retainers, as described above, will be used to force cement grout into the annulus and behind perforated intervals, as necessary.

If the hole has been obstructed, as much cement as possible will be placed from 100 feet below the LBFU-bedrock contact to the top of the core hole.

The volume of Type V cement will be recorded and will not be less than the estimated volume of material required to fill each interval. All cement grout will consist of Type V cement, or equivalent approved in accordance with the UIC Permit.

Certification

I certify under the penalty of law that I have personally examined and am familiar with the information submitted in this document and all attachments and that, based on my inquiry of those individuals immediately responsible for obtaining the information, I believe that the information is true, accurate, and complete. I am aware that there are significant penalties for submitting false information, including the possibliity of fine and imprisonment. (Ref. 40 CFR § 144.32)

Name and Official Title *(Please type or print)*	Signature	Date Signed
Dan Johnson, VP - General Manager		10/3/2019

INSTRUCTIONS FOR FORM 7520-19

This form replaces forms 7520-12 and 7520-14. Use this form only when work is planned or has occurred that affects the well's construction or operation as an injection well, including work on the casing, tubing or packer (or for shallow Class V wells, the subsurface fluid emplacement network). Use one form per injection well. While reports or other information developed by contractors or service companies may be attached, this form must be signed by a responsible entity as described at 40 CFR 144.32. Note: operators closing Class V wells should use Form 7520-17.

NAME, ADDRESS, PHONE AND/OR EMAIL OF PERMITTEE: Enter the name and street address, city/town, state, and ZIP code of the permittee. Also provide an email address (if available) and/or a phone number.

PERMIT OR EPA ID NUMBER: Enter the well identification number or permit number assigned to the well by the EPA or the permitting authority.

API NUMBER: Enter the number assigned by the local jurisdiction (usually a State Oil and Gas Agency) using the American Petroleum Institute standard numbering system.

FULL WELL NAME: Enter the full name of the well or project.

Enter the **STATE** and **COUNTY** where the well is located. For States that do not have counties, use the name of that State's equivalent jurisdiction at a more local level.

WELL LOCATION: Fill in the complete township, range, and section to the nearest quarter-quarter section. A township is north or south of the baseline, and a range is east or west of the principal meridian (e.g., T12N, R34W). Also include the distance, in feet, from the nearest north or south line and nearest east or west line of the quarter-section. Also, enter the **latitude** and **longitude** of the well in decimal degrees, to five or six places if possible; be sure to include a negative sign for the longitude of a well in the Western Hemisphere and a negative sign for the latitude of a well in the Southern Hemisphere.

Enter the **WELL CLASS,** i.e., the class of injection well as defined in 40 CFR 144.6.

TIMING OF THE ACTION: Check ***Notice prior to work*** if the activity has not yet occurred (i.e., is planned). Check ***Report after work*** if the activity described has already occurred. As appropriate, include the date the activity is expected to start or the date the activity was completed. (Note this may not be available, e.g., for a plugging plan submitted with a permit application.)

TYPE OF ACTION: Check the appropriate box to describe the kind of activity being reported. Check ***Well Rework*** for work that was/will be performed on the well after it has already been in operation as an injection well. Check ***Plugging and Abandonment*** to report on plans for or descriptions of final closure/plugging after use as an injection well. Check ***Conversion to a Non-Injection Well*** if the well is to be converted to something other than an injection well.

Provide a **NARRATIVE DESCRIPTION** of the work planned to be performed, or that was performed. The narrative should include a description of the main procedures planned or that occurred during the work activity. A service company report, daily report, or similar document may be attached if it includes all the requested information and is clear and legible.

For well reworks, include the following information: The reason for the well rework; depths of activity; type of activity; changes to injection well configuration, well casing, or cement behind casing; any plug added to the well and its depth; any newly drilled interval and its depth; method(s) to demonstrate that the well has mechanical integrity (as applicable); and any deviations from the approved rework plan (as applicable).

For a well plugging plan, include the following information: Reason for the well plugging; number of plugs placed, and their depths; materials used as plugs (e.g., cast iron bridge plug, cement, cement retainer); method to set plugs; and wait-on-cement times, if any. Also provide one or more cost estimates from an independent firm in the business of plugging and abandoning wells to plug the well as described in the plan.

For well plugging affidavit, include the following information: Reason for the well plugging; number of plugs placed, and their depths; materials used as plugs (e.g., cast iron bridge plug, cement, cement retainer); method to set plugs; wait-on-cement times, if any; and any deviations from the approved plugging plan (if applicable).

For conversion to a non-injection well, include the following information: Depths of activity; type of activity; changes to injection well configuration, well casing, or cement behind casing; any plug added to the well and its depth; any newly drilled interval and its depth; depths of new perforations; and method(s) to demonstrate that the well has mechanical integrity (as applicable).

For all of the above activities, include a well sketch depicting the work, results of well tests/logging performed, service company tickets, and any other available information demonstrating how the work was/is to be performed. Also, specify whether depths are below ground surface, relative to Kelly bushing, etc.

CERTIFICATION: This form must be signed and dated by either: a responsible corporate officer for a corporation, by a general partner for a partnership, by the proprietor of a sole proprietorship, or by a principal executive or ranking elected official for a public agency.

PAPERWORK REDUCTION ACT NOTICE: The public reporting and recordkeeping burden for this collection of information is estimated to average between 6.0 and 7.9 hours per response, depending on the injection well class. Burden means the total time, effort, or financial resource expended by persons to generate, maintain, retain, or disclose or provide information to or for a Federal Agency. This includes the time needed to review instructions; develop, acquire, install, and utilize technology and systems for the purposes of collecting, validating, and verifying information, processing and maintaining information, and disclosing and providing information; adjust the existing ways to comply with any previously applicable instructions and requirements; train personnel to be able to respond to the collection of information; search data sources; complete and review the collection of information; and, transmit or otherwise disclose the information. An agency may not conduct or sponsor, and a person is not required to respond to, a collection of information unless it displays a currently valid OMB control number. Send comments on the Agency's need for this information, the accuracy of the provided burden estimates, and any suggested methods for minimizing respondent burden, including the use of automated collection techniques to Director, Collection Strategies Division, U.S. Environmental Protection Agency (2822), 1200 Pennsylvania Ave., NW., Washington, D.C. 20460. Include the OMB control number in any correspondence. Do not send the completed forms to this address.

AS-BUILT COREHOLE 106MF

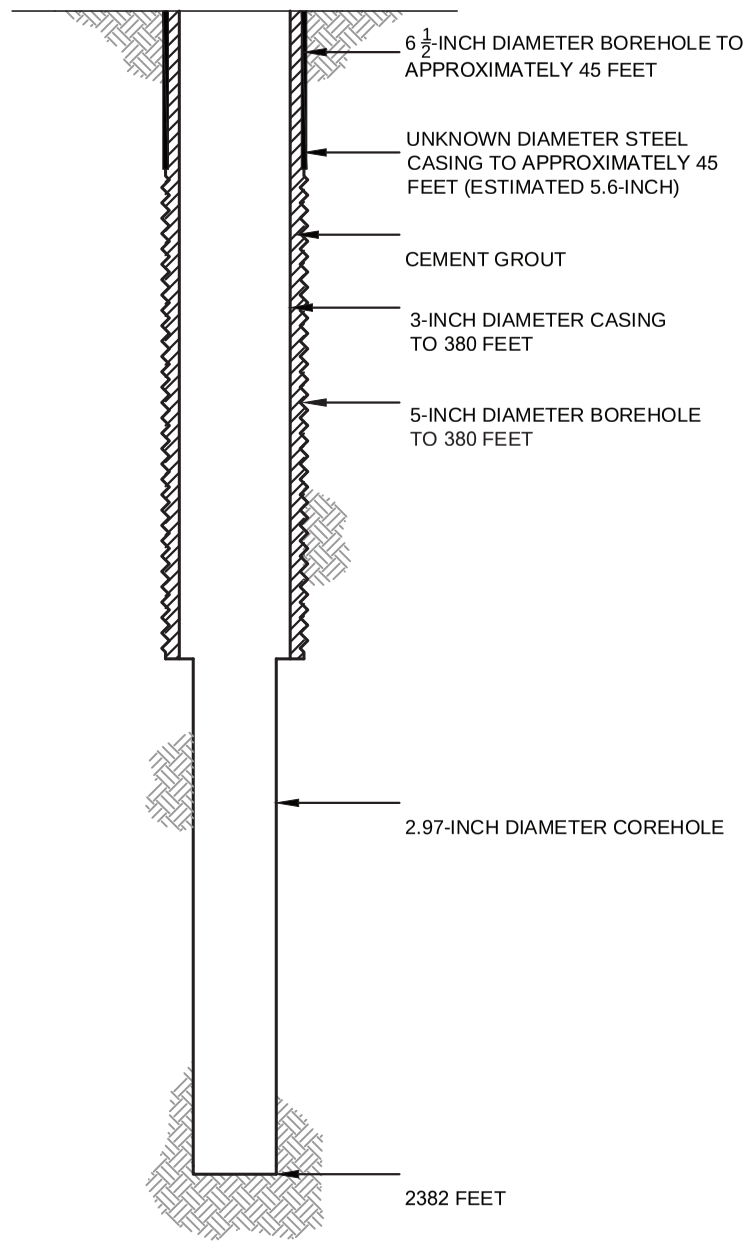

PROPOSED PLUGGING AND ABANDONMENT COREHOLE 106MF

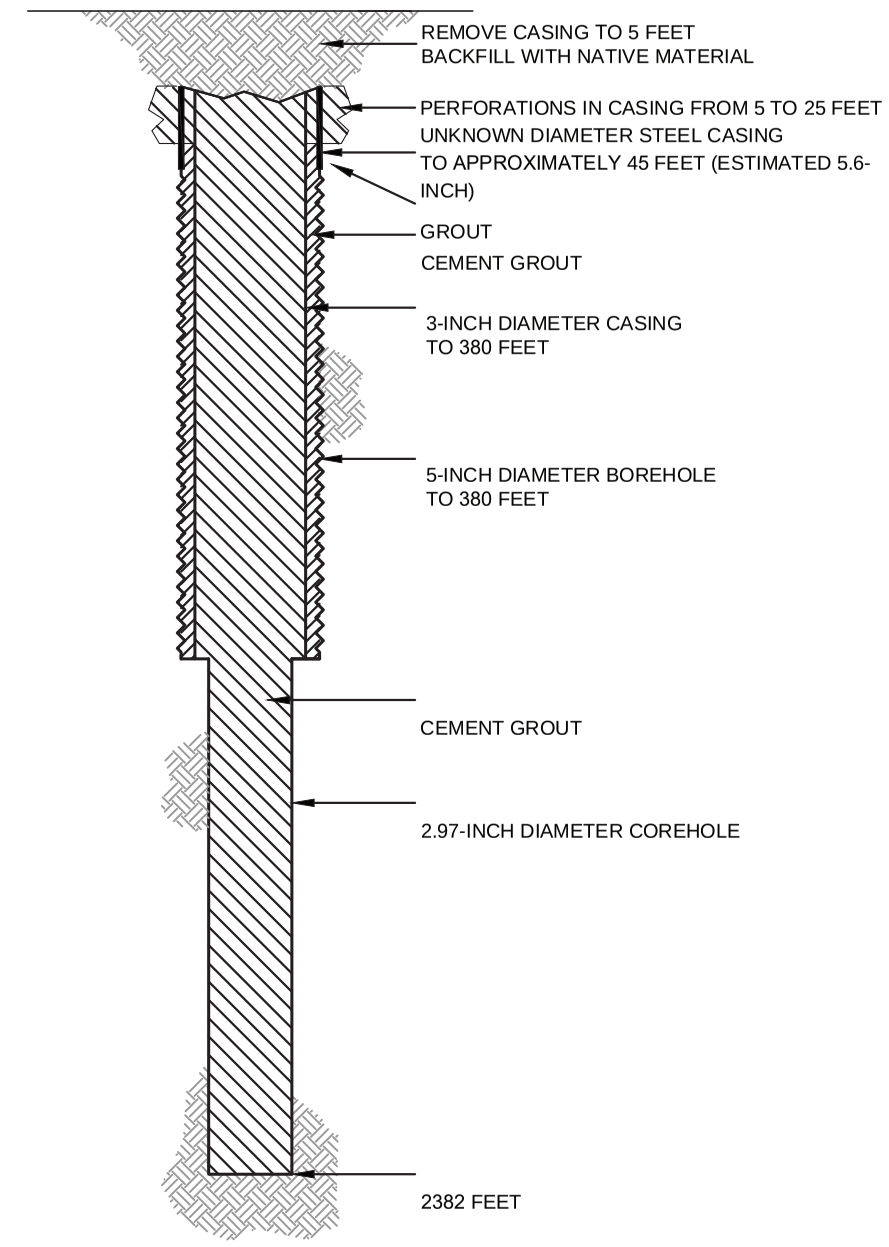

HALEY ALDRICH

FLORENCE COPPER, INC.
FLORENCE, ARIZONA

COREHOLE 106MF DIAGRAM

FLORENCE COPPER INC.

NOT TO SCALE
SEPTEMBER 2019

FIGURE 1

MOBINI, GITA Printed: 4/21/2017 12:00 PM Layout: ABANDON (2)
G:\PROJECTS\CURIS RESOURCES\38706-CURIS FEASIBILITY\DRAWINGS\EPA\WELL ABANDON\415S_ABANDON.DWG

OMB No. 2040-0042 Approval Expires 4/30/2022

United States Environmental Protection Agency

EPA

WELL REWORK RECORD, PLUGGING AND ABANDONMENT PLAN, OR PLUGGING AND ABANDONMENT AFFIDAVIT

Name and Address, Phone Number and/or Email of Permittee

Florence Copper Project
1575 W Hunt Hwy,
Florence, AZ 85132

Permit or EPA ID Number	API Number	Full Well Name
R9UIC-AZ3-FY11-1		107MF

State	County
Arizona	Pinal

Locate well in two directions from nearest lines of quarter section and drilling unit

Surface Location

NW 1/4 of NE 1/4 of Section 33 Township 4S Range 9E

Latitude 33.04498214

Longitude -111.4289553

_____ ft. from (N/S) _____ Line of quarter section

_____ ft. from (E/W) _____ Line of quarter section.

Well Class	Timing of Action (pick one)	Type of Action (pick one)
☐ Class I ☐ Class II ☑ Class III ☐ Class V	☑ Notice Prior to Work Date Expected to Commence March 2021 ☐ Report After Work Date Work Ended	☐ Well Rework ☑ Plugging and Abandonment ☐ Conversion to a Non-Injection Well

Provide a narrative description of the work planned to be performed, or that was performed. Use additional pages as necessary. See instructions.

A workover rig capable of performing the required abandonment operations at the required depths will be moved in and set up over the core hole. The core hole will be inspected to determine the depth to which the hole remains open and if any obstructions are present in the core hole; the presence and condition of any existing collar will also be documented. If necessary, the core hole will be cleaned out to a depth of at least 100 feet below the bedrock-LBFU contact to enable placement of cement seals.

If collar is present, an attempt will be made to remove it. If removal of the collar is not feasible, it will be left in the hole and perforated as needed to allow an annular seal to be placed to a depth of at least 25 feet bgs. In areas of agricultural use, the surface casing will be cut at least 5 feet bgs and removed.

If the collar cannot be removed, it will be perforated from at least 20 feet below the bedrock-LBFU contact to at least 20 feet above the contact; from at least 20 feet below the base of the MFGU to at least 20 feet above the top of the MFGU; and from at least 25 feet bgs to 5 feet bgs.

A tremie pipe will be used to place Type V cement in the open core hole from the bottom of the core hole to the top of the core hole. Cement retainers, as described above, will be used to force cement grout into the annulus and behind perforated intervals, as necessary.

If the hole has been obstructed, as much cement as possible will be placed from 100 feet below the LBFU-bedrock contact to the top of the core hole.

The volume of Type V cement will be recorded and will not be less than the estimated volume of material required to fill each interval. All cement grout will consist of Type V cement, or equivalent approved in accordance with the UIC Permit.

Certification

I certify under the penalty of law that I have personally examined and am familiar with the information submitted in this document and all attachments and that, based on my inquiry of those individuals immediately responsible for obtaining the information, I believe that the information is true, accurate, and complete. I am aware that there are significant penalties for submitting false information, including the possibliity of fine and imprisonment. (Ref. 40 CFR § 144.32)

Name and Official Title *(Please type or print)*	Signature	Date Signed
Dan Johnson, VP - General Manager		10/3/2019

INSTRUCTIONS FOR FORM 7520-19

This form replaces forms 7520-12 and 7520-14. Use this form only when work is planned or has occurred that affects the well's construction or operation as an injection well, including work on the casing, tubing or packer (or for shallow Class V wells, the subsurface fluid emplacement network). Use one form per injection well. While reports or other information developed by contractors or service companies may be attached, this form must be signed by a responsible entity as described at 40 CFR 144.32. Note: operators closing Class V wells should use Form 7520-17.

NAME, ADDRESS, PHONE AND/OR EMAIL OF PERMITTEE: Enter the name and street address, city/town, state, and ZIP code of the permittee. Also provide an email address (if available) and/or a phone number.

PERMIT OR EPA ID NUMBER: Enter the well identification number or permit number assigned to the well by the EPA or the permitting authority.

API NUMBER: Enter the number assigned by the local jurisdiction (usually a State Oil and Gas Agency) using the American Petroleum Institute standard numbering system.

FULL WELL NAME: Enter the full name of the well or project.

Enter the **STATE** and **COUNTY** where the well is located. For States that do not have counties, use the name of that State's equivalent jurisdiction at a more local level.

WELL LOCATION: Fill in the complete township, range, and section to the nearest quarter-quarter section. A township is north or south of the baseline, and a range is east or west of the principal meridian (e.g., T12N, R34W). Also include the distance, in feet, from the nearest north or south line and nearest east or west line of the quarter-section. Also, enter the **latitude** and **longitude** of the well in decimal degrees, to five or six places if possible; be sure to include a negative sign for the longitude of a well in the Western Hemisphere and a negative sign for the latitude of a well in the Southern Hemisphere.

Enter the **WELL CLASS,** i.e., the class of injection well as defined in 40 CFR 144.6.

TIMING OF THE ACTION: Check ***Notice prior to work*** if the activity has not yet occurred (i.e., is planned). Check ***Report after work*** if the activity described has already occurred. As appropriate, include the date the activity is expected to start or the date the activity was completed. (Note this may not be available, e.g., for a plugging plan submitted with a permit application.)

TYPE OF ACTION: Check the appropriate box to describe the kind of activity being reported. Check ***Well Rework*** for work that was/will be performed on the well after it has already been in operation as an injection well. Check ***Plugging and Abandonment*** to report on plans for or descriptions of final closure/plugging after use as an injection well. Check ***Conversion to a Non-Injection Well*** if the well is to be converted to something other than an injection well.

Provide a **NARRATIVE DESCRIPTION** of the work planned to be performed, or that was performed. The narrative should include a description of the main procedures planned or that occurred during the work activity. A service company report, daily report, or similar document may be attached if it includes all the requested information and is clear and legible.

For well reworks, include the following information: The reason for the well rework; depths of activity; type of activity; changes to injection well configuration, well casing, or cement behind casing; any plug added to the well and its depth; any newly drilled interval and its depth; method(s) to demonstrate that the well has mechanical integrity (as applicable); and any deviations from the approved rework plan (as applicable).

For a well plugging plan, include the following information: Reason for the well plugging; number of plugs placed, and their depths; materials used as plugs (e.g., cast iron bridge plug, cement, cement retainer); method to set plugs; and wait-on-cement times, if any. Also provide one or more cost estimates from an independent firm in the business of plugging and abandoning wells to plug the well as described in the plan.

For well plugging affidavit, include the following information: Reason for the well plugging; number of plugs placed, and their depths; materials used as plugs (e.g., cast iron bridge plug, cement, cement retainer); method to set plugs; wait-on-cement times, if any; and any deviations from the approved plugging plan (if applicable).

For conversion to a non-injection well, include the following information: Depths of activity; type of activity; changes to injection well configuration, well casing, or cement behind casing; any plug added to the well and its depth; any newly drilled interval and its depth; depths of new perforations; and method(s) to demonstrate that the well has mechanical integrity (as applicable).

For all of the above activities, include a well sketch depicting the work, results of well tests/logging performed, service company tickets, and any other available information demonstrating how the work was/is to be performed. Also, specify whether depths are below ground surface, relative to Kelly bushing, etc.

CERTIFICATION: This form must be signed and dated by either: a responsible corporate officer for a corporation, by a general partner for a partnership, by the proprietor of a sole proprietorship, or by a principal executive or ranking elected official for a public agency.

PAPERWORK REDUCTION ACT NOTICE: The public reporting and recordkeeping burden for this collection of information is estimated to average between 6.0 and 7.9 hours per response, depending on the injection well class. Burden means the total time, effort, or financial resource expended by persons to generate, maintain, retain, or disclose or provide information to or for a Federal Agency. This includes the time needed to review instructions; develop, acquire, install, and utilize technology and systems for the purposes of collecting, validating, and verifying information, processing and maintaining information, and disclosing and providing information; adjust the existing ways to comply with any previously applicable instructions and requirements; train personnel to be able to respond to the collection of information; search data sources; complete and review the collection of information; and, transmit or otherwise disclose the information. An agency may not conduct or sponsor, and a person is not required to respond to, a collection of information unless it displays a currently valid OMB control number. Send comments on the Agency's need for this information, the accuracy of the provided burden estimates, and any suggested methods for minimizing respondent burden, including the use of automated collection techniques to Director, Collection Strategies Division, U.S. Environmental Protection Agency (2822), 1200 Pennsylvania Ave., NW., Washington, D.C. 20460. Include the OMB control number in any correspondence. Do not send the completed forms to this address.

AS-BUILT COREHOLE 107MF

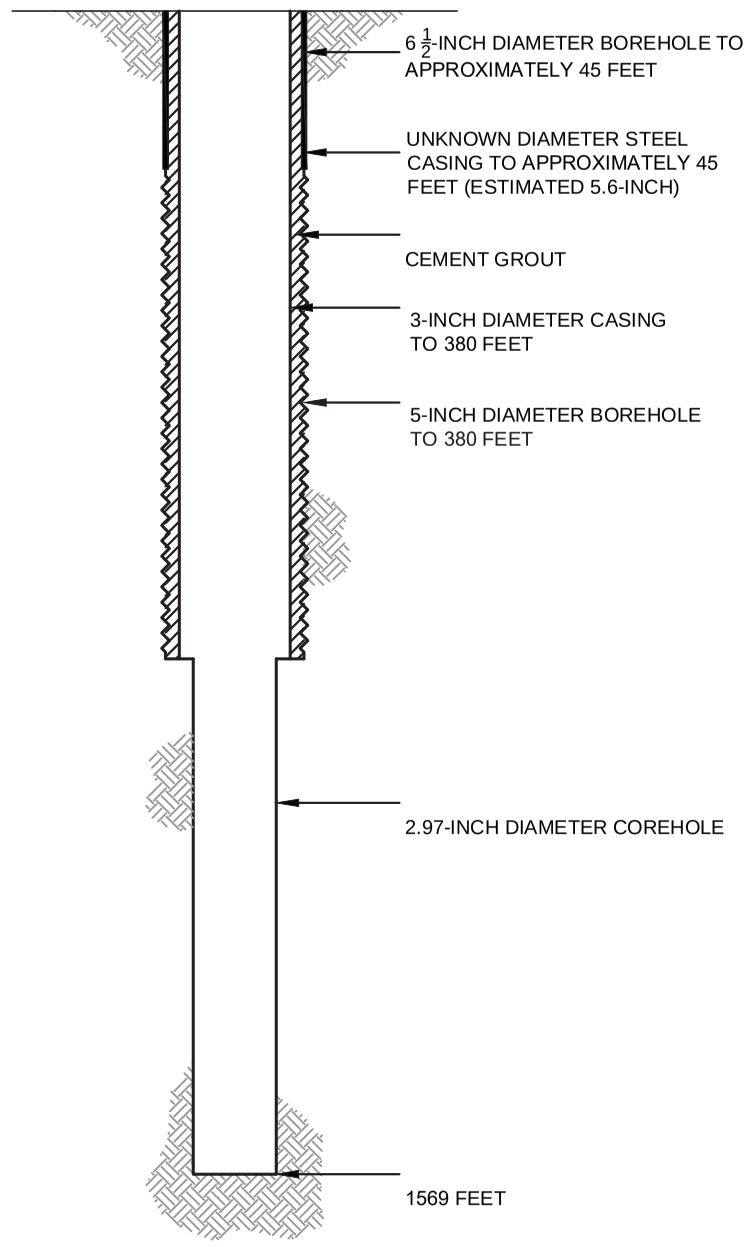

PROPOSED PLUGGING AND ABANDONMENT COREHOLE 107MF

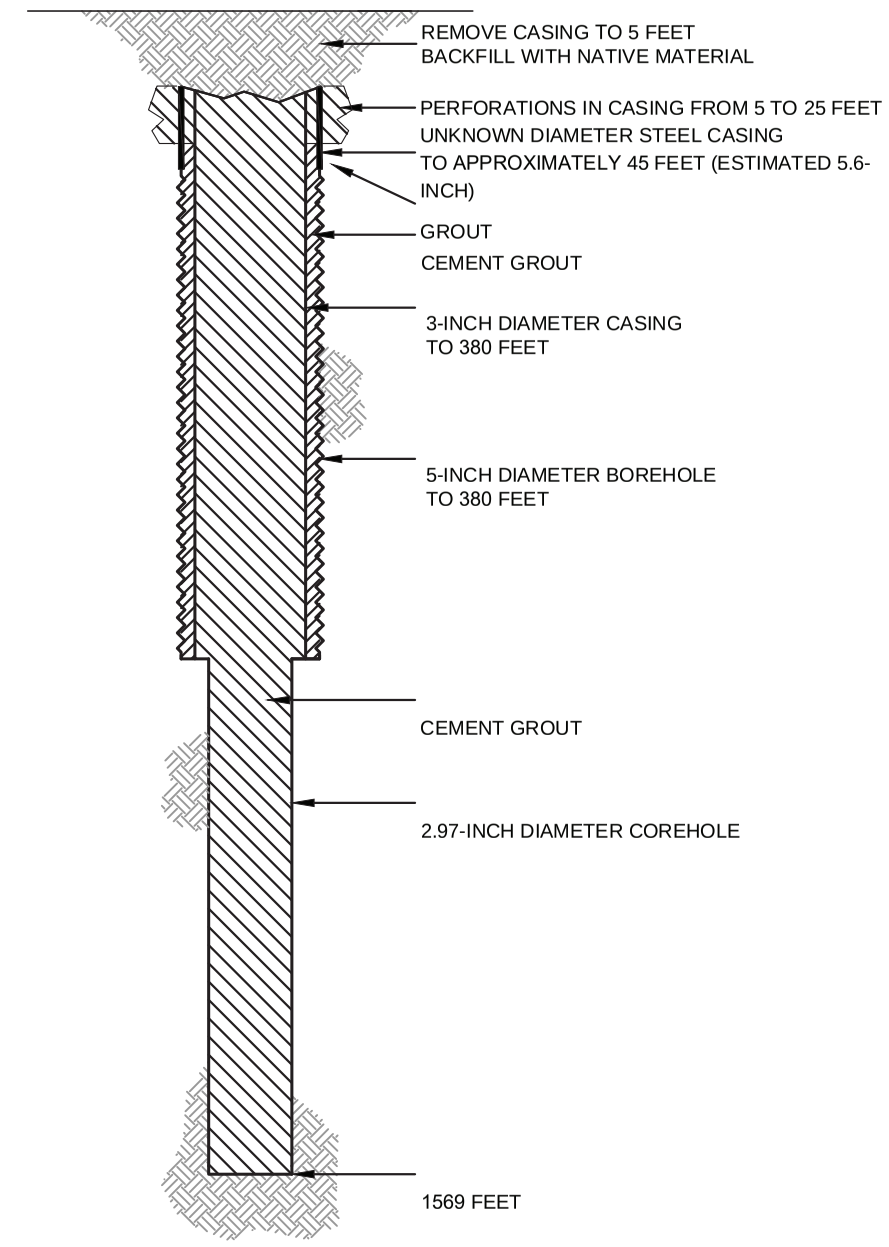

HALEY ALDRICH

FLORENCE COPPER, INC.
FLORENCE, ARIZONA

COREHOLE 107MF DIAGRAM

FLORENCE COPPER INC.

NOT TO SCALE
SEPTEMBER 2019

FIGURE 1

MOBINI, GITA Printed: 4/21/2017 12:00 PM Layout: ABANDON (2)
G:\PROJECTS\CURIS RESOURCES\38706-CURIS FEASIBILITY\DRAWINGS\EPA\WELL ABANDON\415S_ABANDON.DWG

OMB No. 2040-0042 Approval Expires 4/30/2022

United States Environmental Protection Agency

WELL REWORK RECORD, PLUGGING AND ABANDONMENT PLAN, OR PLUGGING AND ABANDONMENT AFFIDAVIT

Name and Address, Phone Number and/or Email of Permittee

Florence Copper Project
1575 W Hunt Hwy,
Florence, AZ 85132

Permit or EPA ID Number	API Number	Full Well Name
R9UIC-AZ3-FY11-1		108MF

State	County
Arizona	Pinal

Locate well in two directions from nearest lines of quarter section and drilling unit

Surface Location

SW 1/4 of SE 1/4 of Section 28 Township 4S Range 9E

Latitude 33.04736087

Longitude -111.4273604

ft. from (N/S) Line of quarter section

ft. from (E/W) Line of quarter section.

Well Class	Timing of Action (pick one)	Type of Action (pick one)
☐ Class I ☐ Class II ☑ Class III ☐ Class V	☑ Notice Prior to Work Date Expected to Commence March 2021 ☐ Report After Work Date Work Ended	☐ Well Rework ☑ Plugging and Abandonment ☐ Conversion to a Non-Injection Well

Provide a narrative description of the work planned to be performed, or that was performed. Use additional pages as necessary. See instructions.

A workover rig capable of performing the required abandonment operations at the required depths will be moved in and set up over the core hole. The core hole will be inspected to determine the depth to which the hole remains open and if any obstructions are present in the core hole; the presence and condition of any existing collar will also be documented. If necessary, the core hole will be cleaned out to a depth of at least 100 feet below the bedrock-LBFU contact to enable placement of cement seals.

If collar is present, an attempt will be made to remove it. If removal of the collar is not feasible, it will be left in the hole and perforated as needed to allow an annular seal to be placed to a depth of at least 25 feet bgs. In areas of agricultural use, the surface casing will be cut at least 5 feet bgs and removed.

If the collar cannot be removed, it will be perforated from at least 20 feet below the bedrock-LBFU contact to at least 20 feet above the contact; from at least 20 feet below the base of the MFGU to at least 20 feet above the top of the MFGU; and from at least 25 feet bgs to 5 feet bgs.

A tremie pipe will be used to place Type V cement in the open core hole from the bottom of the core hole to the top of the core hole. Cement retainers, as described above, will be used to force cement grout into the annulus and behind perforated intervals, as necessary.

If the hole has been obstructed, as much cement as possible will be placed from 100 feet below the LBFU-bedrock contact to the top of the core hole.

The volume of Type V cement will be recorded and will not be less than the estimated volume of material required to fill each interval. All cement grout will consist of Type V cement, or equivalent approved in accordance with the UIC Permit.

Certification

I certify under the penalty of law that I have personally examined and am familiar with the information submitted in this document and all attachments and that, based on my inquiry of those individuals immediately responsible for obtaining the information, I believe that the information is true, accurate, and complete. I am aware that there are significant penalties for submitting false information, including the possibliity of fine and imprisonment. (Ref. 40 CFR § 144.32)

Name and Official Title *(Please type or print)*	Signature	Date Signed
Dan Johnson, VP - General Manager		10/3/2019

INSTRUCTIONS FOR FORM 7520-19

This form replaces forms 7520-12 and 7520-14. Use this form only when work is planned or has occurred that affects the well's construction or operation as an injection well, including work on the casing, tubing or packer (or for shallow Class V wells, the subsurface fluid emplacement network). Use one form per injection well. While reports or other information developed by contractors or service companies may be attached, this form must be signed by a responsible entity as described at 40 CFR 144.32. Note: operators closing Class V wells should use Form 7520-17.

NAME, ADDRESS, PHONE AND/OR EMAIL OF PERMITTEE: Enter the name and street address, city/town, state, and ZIP code of the permittee. Also provide an email address (if available) and/or a phone number.

PERMIT OR EPA ID NUMBER: Enter the well identification number or permit number assigned to the well by the EPA or the permitting authority.

API NUMBER: Enter the number assigned by the local jurisdiction (usually a State Oil and Gas Agency) using the American Petroleum Institute standard numbering system.

FULL WELL NAME: Enter the full name of the well or project.

Enter the **STATE** and **COUNTY** where the well is located. For States that do not have counties, use the name of that State's equivalent jurisdiction at a more local level.

WELL LOCATION: Fill in the complete township, range, and section to the nearest quarter-quarter section. A township is north or south of the baseline, and a range is east or west of the principal meridian (e.g., T12N, R34W). Also include the distance, in feet, from the nearest north or south line and nearest east or west line of the quarter-section. Also, enter the **latitude** and **longitude** of the well in decimal degrees, to five or six places if possible; be sure to include a negative sign for the longitude of a well in the Western Hemisphere and a negative sign for the latitude of a well in the Southern Hemisphere.

Enter the **WELL CLASS,** i.e., the class of injection well as defined in 40 CFR 144.6.

TIMING OF THE ACTION: Check ***Notice prior to work*** if the activity has not yet occurred (i.e., is planned). Check ***Report after work*** if the activity described has already occurred. As appropriate, include the date the activity is expected to start or the date the activity was completed. (Note this may not be available, e.g., for a plugging plan submitted with a permit application.)

TYPE OF ACTION: Check the appropriate box to describe the kind of activity being reported. Check ***Well Rework*** for work that was/will be performed on the well after it has already been in operation as an injection well. Check ***Plugging and Abandonment*** to report on plans for or descriptions of final closure/plugging after use as an injection well. Check ***Conversion to a Non-Injection Well*** if the well is to be converted to something other than an injection well.

Provide a **NARRATIVE DESCRIPTION** of the work planned to be performed, or that was performed. The narrative should include a description of the main procedures planned or that occurred during the work activity. A service company report, daily report, or similar document may be attached if it includes all the requested information and is clear and legible.

For well reworks, include the following information: The reason for the well rework; depths of activity; type of activity; changes to injection well configuration, well casing, or cement behind casing; any plug added to the well and its depth; any newly drilled interval and its depth; method(s) to demonstrate that the well has mechanical integrity (as applicable); and any deviations from the approved rework plan (as applicable).

For a well plugging plan, include the following information: Reason for the well plugging; number of plugs placed, and their depths; materials used as plugs (e.g., cast iron bridge plug, cement, cement retainer); method to set plugs; and wait-on-cement times, if any. Also provide one or more cost estimates from an independent firm in the business of plugging and abandoning wells to plug the well as described in the plan.

For well plugging affidavit, include the following information: Reason for the well plugging; number of plugs placed, and their depths; materials used as plugs (e.g., cast iron bridge plug, cement, cement retainer); method to set plugs; wait-on-cement times, if any; and any deviations from the approved plugging plan (if applicable).

For conversion to a non-injection well, include the following information: Depths of activity; type of activity; changes to injection well configuration, well casing, or cement behind casing; any plug added to the well and its depth; any newly drilled interval and its depth; depths of new perforations; and method(s) to demonstrate that the well has mechanical integrity (as applicable).

For all of the above activities, include a well sketch depicting the work, results of well tests/logging performed, service company tickets, and any other available information demonstrating how the work was/is to be performed. Also, specify whether depths are below ground surface, relative to Kelly bushing, etc.

CERTIFICATION: This form must be signed and dated by either: a responsible corporate officer for a corporation, by a general partner for a partnership, by the proprietor of a sole proprietorship, or by a principal executive or ranking elected official for a public agency.

PAPERWORK REDUCTION ACT NOTICE: The public reporting and recordkeeping burden for this collection of information is estimated to average between 6.0 and 7.9 hours per response, depending on the injection well class. Burden means the total time, effort, or financial resource expended by persons to generate, maintain, retain, or disclose or provide information to or for a Federal Agency. This includes the time needed to review instructions; develop, acquire, install, and utilize technology and systems for the purposes of collecting, validating, and verifying information, processing and maintaining information, and disclosing and providing information; adjust the existing ways to comply with any previously applicable instructions and requirements; train personnel to be able to respond to the collection of information; search data sources; complete and review the collection of information; and, transmit or otherwise disclose the information. An agency may not conduct or sponsor, and a person is not required to respond to, a collection of information unless it displays a currently valid OMB control number. Send comments on the Agency's need for this information, the accuracy of the provided burden estimates, and any suggested methods for minimizing respondent burden, including the use of automated collection techniques to Director, Collection Strategies Division, U.S. Environmental Protection Agency (2822), 1200 Pennsylvania Ave., NW., Washington, D.C. 20460. Include the OMB control number in any correspondence. Do not send the completed forms to this address.

AS-BUILT COREHOLE 108MF

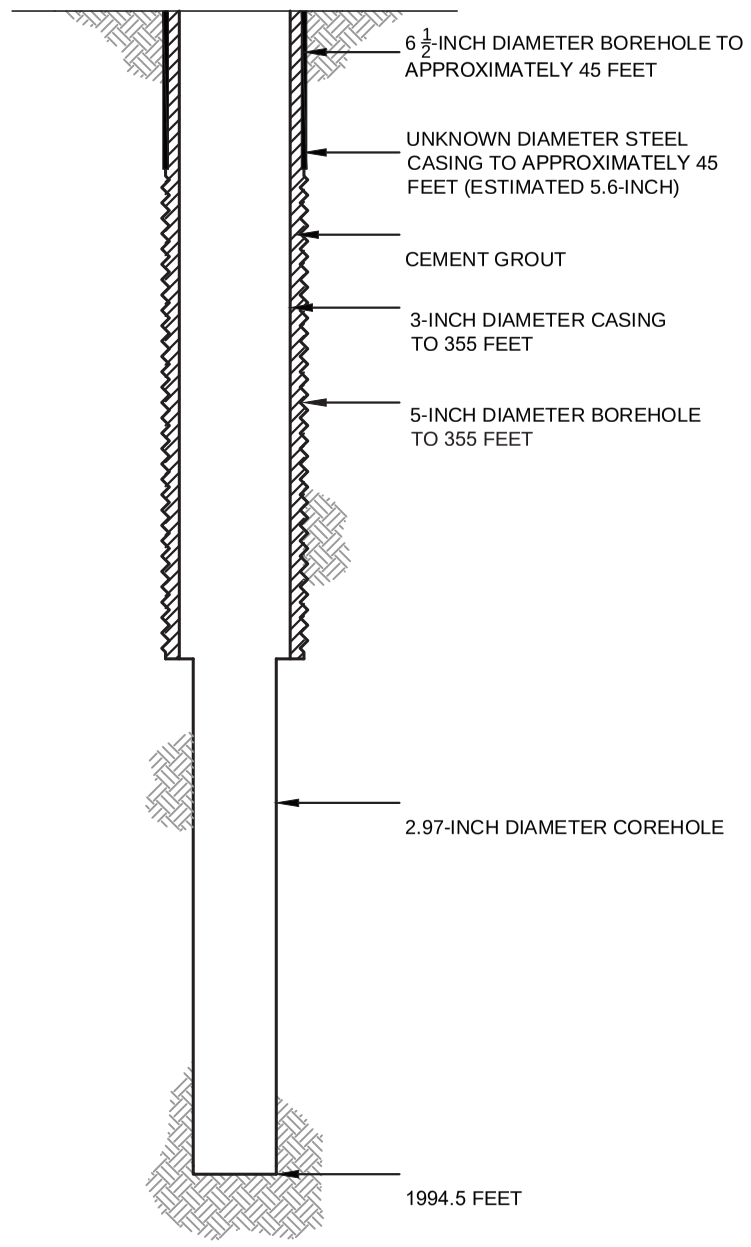

PROPOSED PLUGGING AND ABANDONMENT COREHOLE 108MF

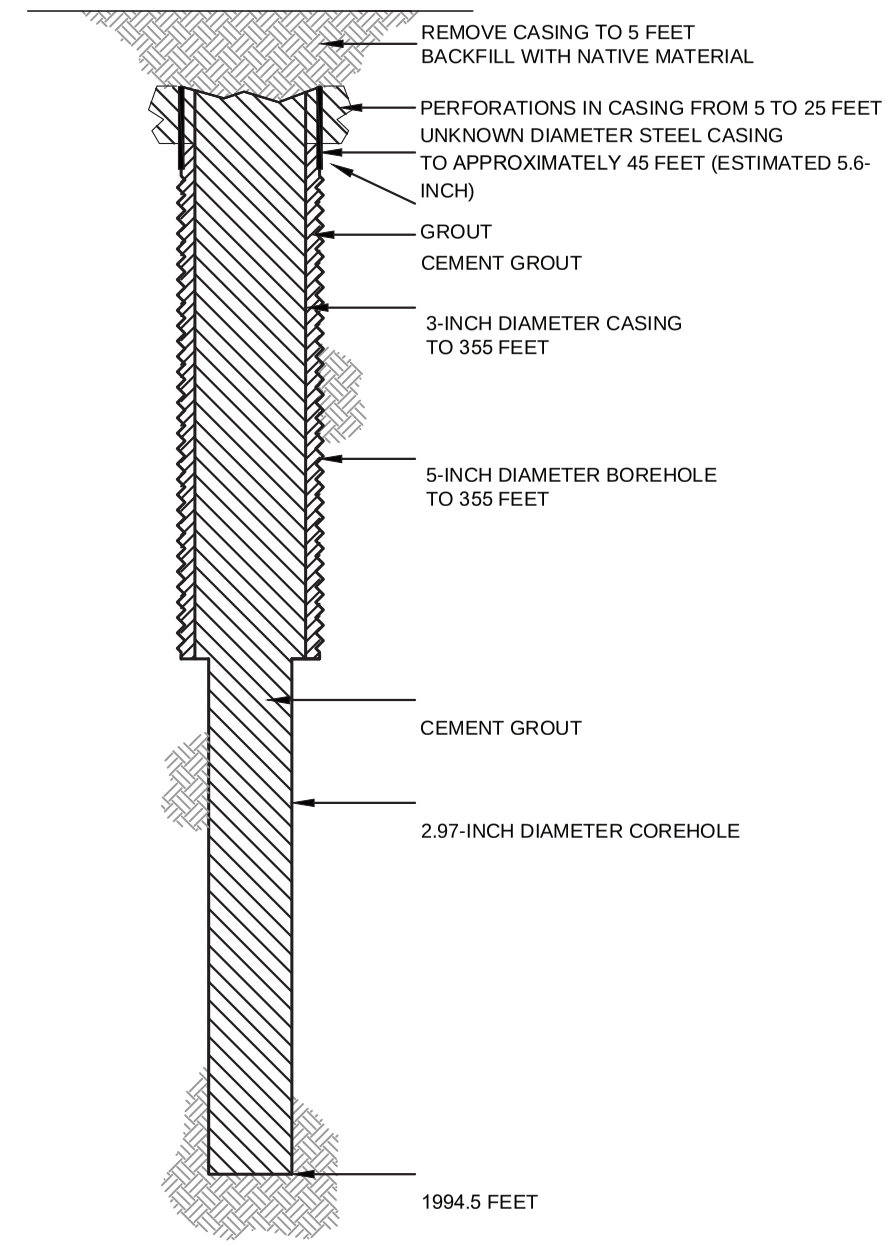

HALEY ALDRICH

FLORENCE COPPER, INC.
FLORENCE, ARIZONA

COREHOLE 108MF DIAGRAM

FLORENCE COPPER INC.

NOT TO SCALE
SEPTEMBER 2019

FIGURE 1

MOBINI, GITA Printed: 4/21/2017 12:00 PM Layout: ABANDON (2)
G:\PROJECTS\CURIS RESOURCES\38706-CURIS FEASIBILITY\DRAWINGS\EPA\WELL ABANDON\415S_ABANDON.DWG

OMB No. 2040-0042 Approval Expires 4/30/2022

United States Environmental Protection Agency

EPA

WELL REWORK RECORD, PLUGGING AND ABANDONMENT PLAN, OR PLUGGING AND ABANDONMENT AFFIDAVIT

Name and Address, Phone Number and/or Email of Permittee

Florence Copper Project
1575 W Hunt Hwy,
Florence, AZ 85132

Permit or EPA ID Number	API Number	Full Well Name
R9UIC-AZ3-FY11-1		109MF

State	County
Arizona	Pinal

Locate well in two directions from nearest lines of quarter section and drilling unit

Surface Location

NW 1/4 of NW 1/4 of Section 33 Township 4S Range 9E

Latitude 33.04501543

Longitude -111.4354754

_____ ft. from (N/S) _____ Line of quarter section

_____ ft. from (E/W) _____ Line of quarter section.

Well Class	Timing of Action (pick one)	Type of Action (pick one)
☐ Class I ☐ Class II ☑ Class III ☐ Class V	☑ Notice Prior to Work Date Expected to Commence March 2021 ☐ Report After Work Date Work Ended	☐ Well Rework ☑ Plugging and Abandonment ☐ Conversion to a Non-Injection Well

Provide a narrative description of the work planned to be performed, or that was performed. Use additional pages as necessary. See instructions.

A workover rig capable of performing the required abandonment operations at the required depths will be moved in and set up over the core hole. The core hole will be inspected to determine the depth to which the hole remains open and if any obstructions are present in the core hole; the presence and condition of any existing collar will also be documented. If necessary, the core hole will be cleaned out to a depth of at least 100 feet below the bedrock-LBFU contact to enable placement of cement seals.

If collar is present, an attempt will be made to remove it. If removal of the collar is not feasible, it will be left in the hole and perforated as needed to allow an annular seal to be placed to a depth of at least 25 feet bgs. In areas of agricultural use, the surface casing will be cut at least 5 feet bgs and removed.

If the collar cannot be removed, it will be perforated from at least 20 feet below the bedrock-LBFU contact to at least 20 feet above the contact; from at least 20 feet below the base of the MFGU to at least 20 feet above the top of the MFGU; and from at least 25 feet bgs to 5 feet bgs.

A tremie pipe will be used to place Type V cement in the open core hole from the bottom of the core hole to the top of the core hole. Cement retainers, as described above, will be used to force cement grout into the annulus and behind perforated intervals, as necessary.

If the hole has been obstructed, as much cement as possible will be placed from 100 feet below the LBFU-bedrock contact to the top of the core hole.

The volume of Type V cement will be recorded and will not be less than the estimated volume of material required to fill each interval. All cement grout will consist of Type V cement, or equivalent approved in accordance with the UIC Permit.

Certification

I certify under the penalty of law that I have personally examined and am familiar with the information submitted in this document and all attachments and that, based on my inquiry of those individuals immediately responsible for obtaining the information, I believe that the information is true, accurate, and complete. I am aware that there are significant penalties for submitting false information, including the possibliity of fine and imprisonment. (Ref. 40 CFR § 144.32)

Name and Official Title *(Please type or print)*	Signature	Date Signed
Dan Johnson, VP - General Manager		10/3/2019

INSTRUCTIONS FOR FORM 7520-19

This form replaces forms 7520-12 and 7520-14. Use this form only when work is planned or has occurred that affects the well's construction or operation as an injection well, including work on the casing, tubing or packer (or for shallow Class V wells, the subsurface fluid emplacement network). Use one form per injection well. While reports or other information developed by contractors or service companies may be attached, this form must be signed by a responsible entity as described at 40 CFR 144.32. Note: operators closing Class V wells should use Form 7520-17.

NAME, ADDRESS, PHONE AND/OR EMAIL OF PERMITTEE: Enter the name and street address, city/town, state, and ZIP code of the permittee. Also provide an email address (if available) and/or a phone number.

PERMIT OR EPA ID NUMBER: Enter the well identification number or permit number assigned to the well by the EPA or the permitting authority.

API NUMBER: Enter the number assigned by the local jurisdiction (usually a State Oil and Gas Agency) using the American Petroleum Institute standard numbering system.

FULL WELL NAME: Enter the full name of the well or project.

Enter the **STATE** and **COUNTY** where the well is located. For States that do not have counties, use the name of that State's equivalent jurisdiction at a more local level.

WELL LOCATION: Fill in the complete township, range, and section to the nearest quarter-quarter section. A township is north or south of the baseline, and a range is east or west of the principal meridian (e.g., T12N, R34W). Also include the distance, in feet, from the nearest north or south line and nearest east or west line of the quarter-section. Also, enter the **latitude** and **longitude** of the well in decimal degrees, to five or six places if possible; be sure to include a negative sign for the longitude of a well in the Western Hemisphere and a negative sign for the latitude of a well in the Southern Hemisphere.

Enter the **WELL CLASS,** i.e., the class of injection well as defined in 40 CFR 144.6.

TIMING OF THE ACTION: Check ***Notice prior to work*** if the activity has not yet occurred (i.e., is planned). Check ***Report after work*** if the activity described has already occurred. As appropriate, include the date the activity is expected to start or the date the activity was completed. (Note this may not be available, e.g., for a plugging plan submitted with a permit application.)

TYPE OF ACTION: Check the appropriate box to describe the kind of activity being reported. Check ***Well Rework*** for work that was/will be performed on the well after it has already been in operation as an injection well. Check ***Plugging and Abandonment*** to report on plans for or descriptions of final closure/plugging after use as an injection well. Check ***Conversion to a Non-Injection Well*** if the well is to be converted to something other than an injection well.

Provide a **NARRATIVE DESCRIPTION** of the work planned to be performed, or that was performed. The narrative should include a description of the main procedures planned or that occurred during the work activity. A service company report, daily report, or similar document may be attached if it includes all the requested information and is clear and legible.

For well reworks, include the following information: The reason for the well rework; depths of activity; type of activity; changes to injection well configuration, well casing, or cement behind casing; any plug added to the well and its depth; any newly drilled interval and its depth; method(s) to demonstrate that the well has mechanical integrity (as applicable); and any deviations from the approved rework plan (as applicable).

For a well plugging plan, include the following information: Reason for the well plugging; number of plugs placed, and their depths; materials used as plugs (e.g., cast iron bridge plug, cement, cement retainer); method to set plugs; and wait-on-cement times, if any. Also provide one or more cost estimates from an independent firm in the business of plugging and abandoning wells to plug the well as described in the plan.

For well plugging affidavit, include the following information: Reason for the well plugging; number of plugs placed, and their depths; materials used as plugs (e.g., cast iron bridge plug, cement, cement retainer); method to set plugs; wait-on-cement times, if any; and any deviations from the approved plugging plan (if applicable).

For conversion to a non-injection well, include the following information: Depths of activity; type of activity; changes to injection well configuration, well casing, or cement behind casing; any plug added to the well and its depth; any newly drilled interval and its depth; depths of new perforations; and method(s) to demonstrate that the well has mechanical integrity (as applicable).

For all of the above activities, include a well sketch depicting the work, results of well tests/logging performed, service company tickets, and any other available information demonstrating how the work was/is to be performed. Also, specify whether depths are below ground surface, relative to Kelly bushing, etc.

CERTIFICATION: This form must be signed and dated by either: a responsible corporate officer for a corporation, by a general partner for a partnership, by the proprietor of a sole proprietorship, or by a principal executive or ranking elected official for a public agency.

PAPERWORK REDUCTION ACT NOTICE: The public reporting and recordkeeping burden for this collection of information is estimated to average between 6.0 and 7.9 hours per response, depending on the injection well class. Burden means the total time, effort, or financial resource expended by persons to generate, maintain, retain, or disclose or provide information to or for a Federal Agency. This includes the time needed to review instructions; develop, acquire, install, and utilize technology and systems for the purposes of collecting, validating, and verifying information, processing and maintaining information, and disclosing and providing information; adjust the existing ways to comply with any previously applicable instructions and requirements; train personnel to be able to respond to the collection of information; search data sources; complete and review the collection of information; and, transmit or otherwise disclose the information. An agency may not conduct or sponsor, and a person is not required to respond to, a collection of information unless it displays a currently valid OMB control number. Send comments on the Agency's need for this information, the accuracy of the provided burden estimates, and any suggested methods for minimizing respondent burden, including the use of automated collection techniques to Director, Collection Strategies Division, U.S. Environmental Protection Agency (2822), 1200 Pennsylvania Ave., NW., Washington, D.C. 20460. Include the OMB control number in any correspondence. Do not send the completed forms to this address.

AS-BUILT COREHOLE 109MF

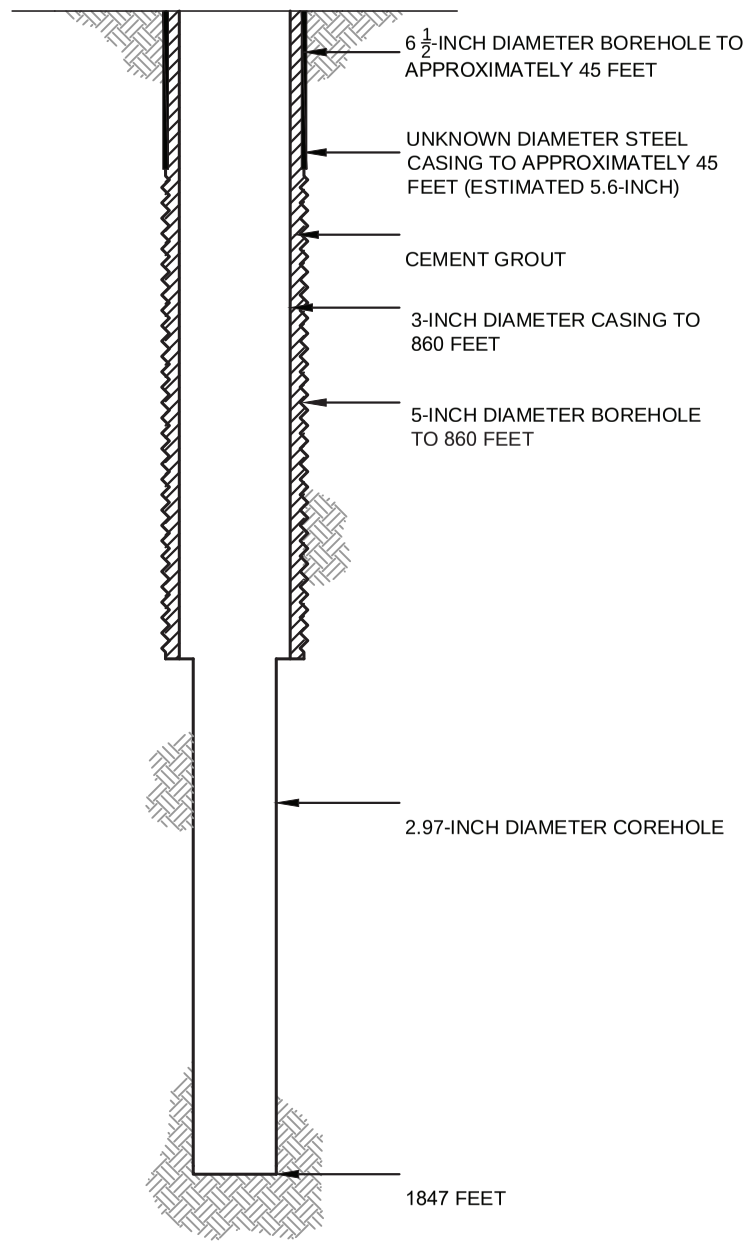

PROPOSED PLUGGING AND ABANDONMENT COREHOLE 109MF

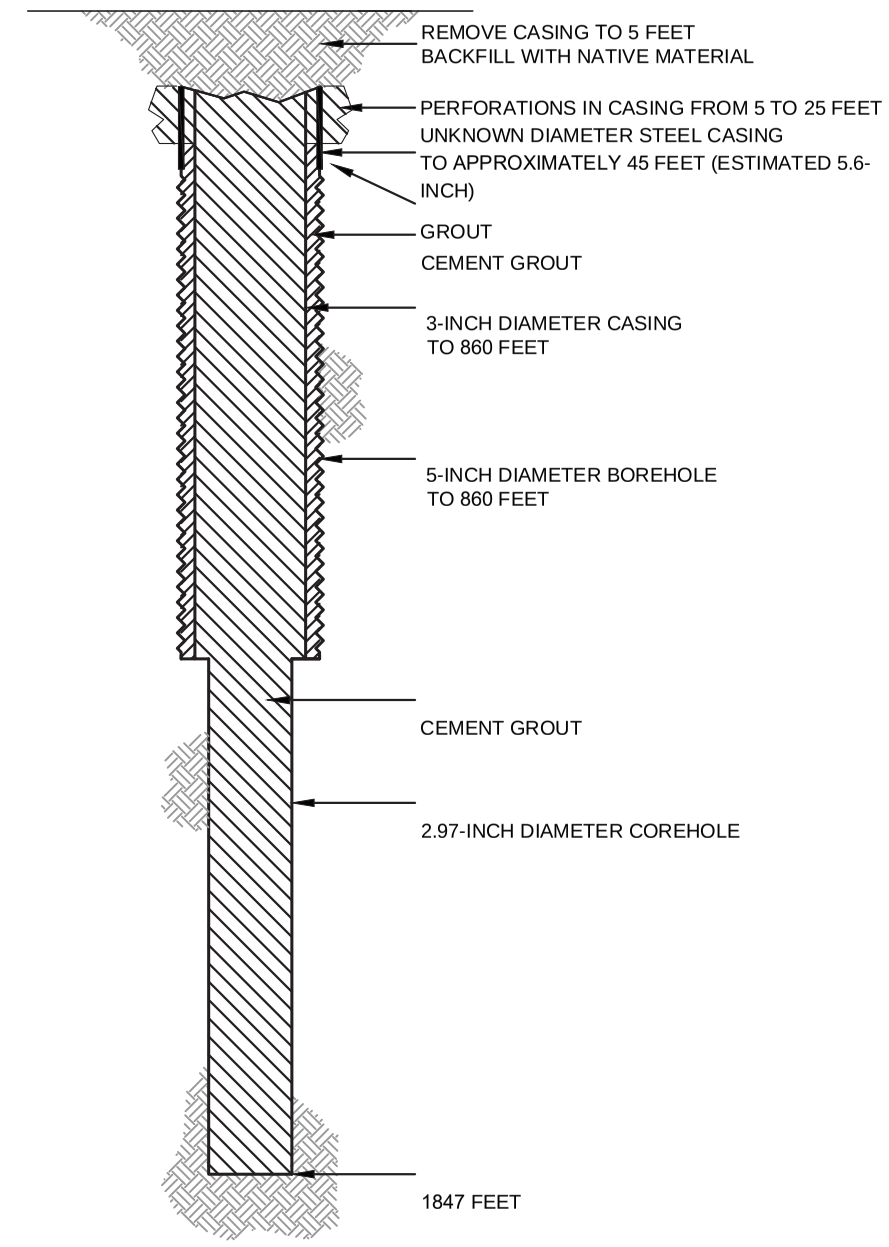

HALEY ALDRICH

FLORENCE COPPER, INC.
FLORENCE, ARIZONA

COREHOLE 109MF DIAGRAM

FLORENCE COPPER INC.

NOT TO SCALE
SEPTEMBER 2019

FIGURE 1

MOBINI, GITA Printed: 4/21/2017 12:00 PM Layout: ABANDON (2)
G:\PROJECTS\CURIS RESOURCES\38706-CURIS FEASIBILITY\DRAWINGS\EPA\WELL ABANDON\415S_ABANDON.DWG

OMB No. 2040-0042 Approval Expires 4/30/2022

United States Environmental Protection Agency

WELL REWORK RECORD, PLUGGING AND ABANDONMENT PLAN, OR PLUGGING AND ABANDONMENT AFFIDAVIT

Name and Address, Phone Number and/or Email of Permittee

Florence Copper Project
1575 W Hunt Hwy,
Florence, AZ 85132

Permit or EPA ID Number	API Number	Full Well Name
R9UIC-AZ3-FY11-1		110S

State	County
Arizona	Pinal

Locate well in two directions from nearest lines of quarter section and drilling unit

Latitude 33.05215789

Longitude -111.4354496

Surface Location

NW **1/4 of** SW **1/4 of Section** 28 **Township** 4S **Range** 9E

_____ **ft. from (N/S)** _____ **Line of quarter section**

_____ **ft. from (E/W)** _____ **Line of quarter section.**

Well Class	Timing of Action (pick one)	Type of Action (pick one)
☐ Class I ☐ Class II ☑ Class III ☐ Class V	☑ Notice Prior to Work Date Expected to Commence March 2021 ☐ Report After Work Date Work Ended	☐ Well Rework ☑ Plugging and Abandonment ☐ Conversion to a Non-Injection Well

Provide a narrative description of the work planned to be performed, or that was performed. Use additional pages as necessary. See instructions.

A workover rig capable of performing the required abandonment operations at the required depths will be moved in and set up over the core hole. The core hole will be inspected to determine the depth to which the hole remains open and if any obstructions are present in the core hole; the presence and condition of any existing collar will also be documented. If necessary, the core hole will be cleaned out to a depth of at least 100 feet below the bedrock-LBFU contact to enable placement of cement seals.

If collar is present, an attempt will be made to remove it. If removal of the collar is not feasible, it will be left in the hole and perforated as needed to allow an annular seal to be placed to a depth of at least 25 feet bgs. In areas of agricultural use, the surface casing will be cut at least 5 feet bgs and removed.

If the collar cannot be removed, it will be perforated from at least 20 feet below the bedrock-LBFU contact to at least 20 feet above the contact; from at least 20 feet below the base of the MFGU to at least 20 feet above the top of the MFGU; and from at least 25 feet bgs to 5 feet bgs.

A tremie pipe will be used to place Type V cement in the open core hole from the bottom of the core hole to the top of the core hole. Cement retainers, as described above, will be used to force cement grout into the annulus and behind perforated intervals, as necessary.

If the hole has been obstructed, as much cement as possible will be placed from 100 feet below the LBFU-bedrock contact to the top of the core hole.

The volume of Type V cement will be recorded and will not be less than the estimated volume of material required to fill each interval. All cement grout will consist of Type V cement, or equivalent approved in accordance with the UIC Permit.

Certification

I certify under the penalty of law that I have personally examined and am familiar with the information submitted in this document and all attachments and that, based on my inquiry of those individuals immediately responsible for obtaining the information, I believe that the information is true, accurate, and complete. I am aware that there are significant penalties for submitting false information, including the possibliity of fine and imprisonment. (Ref. 40 CFR § 144.32)

Name and Official Title *(Please type or print)*	Signature	Date Signed
Dan Johnson, VP - General Manager		10/3/2019

INSTRUCTIONS FOR FORM 7520-19

This form replaces forms 7520-12 and 7520-14. Use this form only when work is planned or has occurred that affects the well's construction or operation as an injection well, including work on the casing, tubing or packer (or for shallow Class V wells, the subsurface fluid emplacement network). Use one form per injection well. While reports or other information developed by contractors or service companies may be attached, this form must be signed by a responsible entity as described at 40 CFR 144.32. Note: operators closing Class V wells should use Form 7520-17.

NAME, ADDRESS, PHONE AND/OR EMAIL OF PERMITTEE: Enter the name and street address, city/town, state, and ZIP code of the permittee. Also provide an email address (if available) and/or a phone number.

PERMIT OR EPA ID NUMBER: Enter the well identification number or permit number assigned to the well by the EPA or the permitting authority.

API NUMBER: Enter the number assigned by the local jurisdiction (usually a State Oil and Gas Agency) using the American Petroleum Institute standard numbering system.

FULL WELL NAME: Enter the full name of the well or project.

Enter the **STATE** and **COUNTY** where the well is located. For States that do not have counties, use the name of that State's equivalent jurisdiction at a more local level.

WELL LOCATION: Fill in the complete township, range, and section to the nearest quarter-quarter section. A township is north or south of the baseline, and a range is east or west of the principal meridian (e.g., T12N, R34W). Also include the distance, in feet, from the nearest north or south line and nearest east or west line of the quarter-section. Also, enter the **latitude** and **longitude** of the well in decimal degrees, to five or six places if possible; be sure to include a negative sign for the longitude of a well in the Western Hemisphere and a negative sign for the latitude of a well in the Southern Hemisphere.

Enter the **WELL CLASS,** i.e., the class of injection well as defined in 40 CFR 144.6.

TIMING OF THE ACTION: Check ***Notice prior to work*** if the activity has not yet occurred (i.e., is planned). Check ***Report after work*** if the activity described has already occurred. As appropriate, include the date the activity is expected to start or the date the activity was completed. (Note this may not be available, e.g., for a plugging plan submitted with a permit application.)

TYPE OF ACTION: Check the appropriate box to describe the kind of activity being reported. Check ***Well Rework*** for work that was/will be performed on the well after it has already been in operation as an injection well. Check ***Plugging and Abandonment*** to report on plans for or descriptions of final closure/plugging after use as an injection well. Check ***Conversion to a Non-Injection Well*** if the well is to be converted to something other than an injection well.

Provide a **NARRATIVE DESCRIPTION** of the work planned to be performed, or that was performed. The narrative should include a description of the main procedures planned or that occurred during the work activity. A service company report, daily report, or similar document may be attached if it includes all the requested information and is clear and legible.

For well reworks, include the following information: The reason for the well rework; depths of activity; type of activity; changes to injection well configuration, well casing, or cement behind casing; any plug added to the well and its depth; any newly drilled interval and its depth; method(s) to demonstrate that the well has mechanical integrity (as applicable); and any deviations from the approved rework plan (as applicable).

For a well plugging plan, include the following information: Reason for the well plugging; number of plugs placed, and their depths; materials used as plugs (e.g., cast iron bridge plug, cement, cement retainer); method to set plugs; and wait-on-cement times, if any. Also provide one or more cost estimates from an independent firm in the business of plugging and abandoning wells to plug the well as described in the plan.

For well plugging affidavit, include the following information: Reason for the well plugging; number of plugs placed, and their depths; materials used as plugs (e.g., cast iron bridge plug, cement, cement retainer); method to set plugs; wait-on-cement times, if any; and any deviations from the approved plugging plan (if applicable).

For conversion to a non-injection well, include the following information: Depths of activity; type of activity; changes to injection well configuration, well casing, or cement behind casing; any plug added to the well and its depth; any newly drilled interval and its depth; depths of new perforations; and method(s) to demonstrate that the well has mechanical integrity (as applicable).

For all of the above activities, include a well sketch depicting the work, results of well tests/logging performed, service company tickets, and any other available information demonstrating how the work was/is to be performed. Also, specify whether depths are below ground surface, relative to Kelly bushing, etc.

CERTIFICATION: This form must be signed and dated by either: a responsible corporate officer for a corporation, by a general partner for a partnership, by the proprietor of a sole proprietorship, or by a principal executive or ranking elected official for a public agency.

PAPERWORK REDUCTION ACT NOTICE: The public reporting and recordkeeping burden for this collection of information is estimated to average between 6.0 and 7.9 hours per response, depending on the injection well class. Burden means the total time, effort, or financial resource expended by persons to generate, maintain, retain, or disclose or provide information to or for a Federal Agency. This includes the time needed to review instructions; develop, acquire, install, and utilize technology and systems for the purposes of collecting, validating, and verifying information, processing and maintaining information, and disclosing and providing information; adjust the existing ways to comply with any previously applicable instructions and requirements; train personnel to be able to respond to the collection of information; search data sources; complete and review the collection of information; and, transmit or otherwise disclose the information. An agency may not conduct or sponsor, and a person is not required to respond to, a collection of information unless it displays a currently valid OMB control number. Send comments on the Agency's need for this information, the accuracy of the provided burden estimates, and any suggested methods for minimizing respondent burden, including the use of automated collection techniques to Director, Collection Strategies Division, U.S. Environmental Protection Agency (2822), 1200 Pennsylvania Ave., NW., Washington, D.C. 20460. Include the OMB control number in any correspondence. Do not send the completed forms to this address.

AS-BUILT COREHOLE 110S

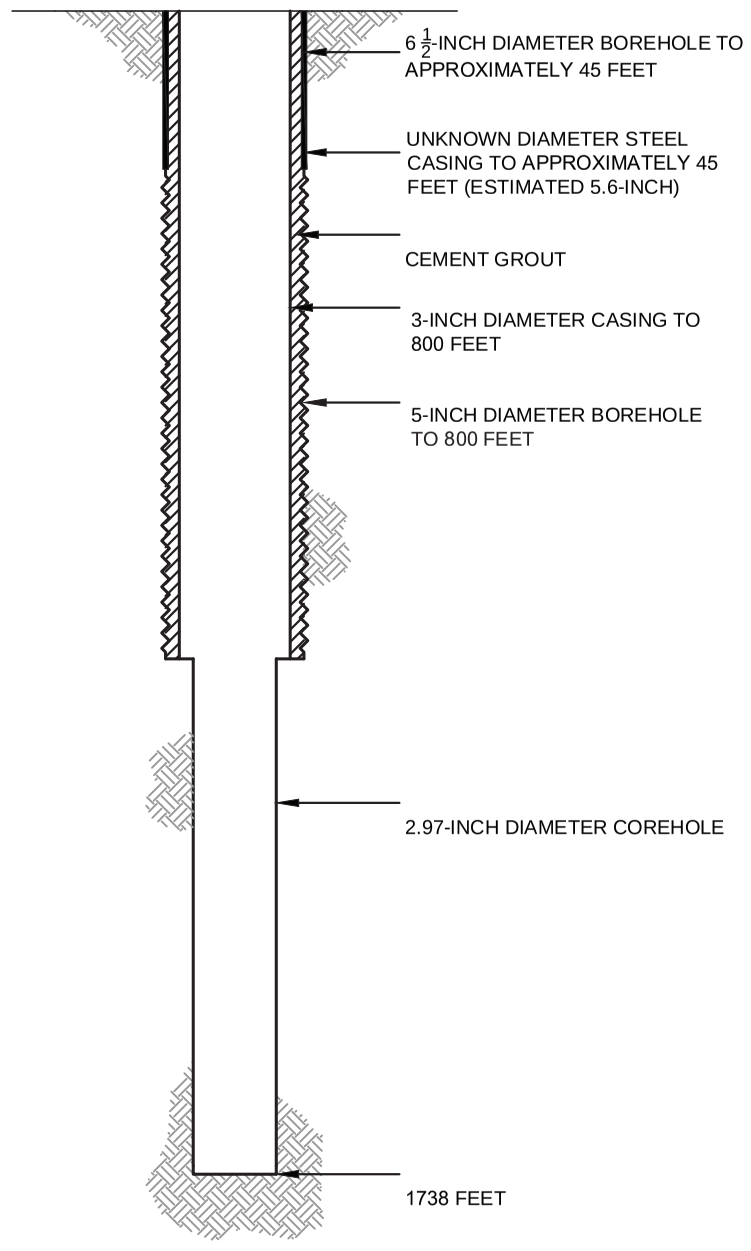

PROPOSED PLUGGING AND ABANDONMENT COREHOLE 110S

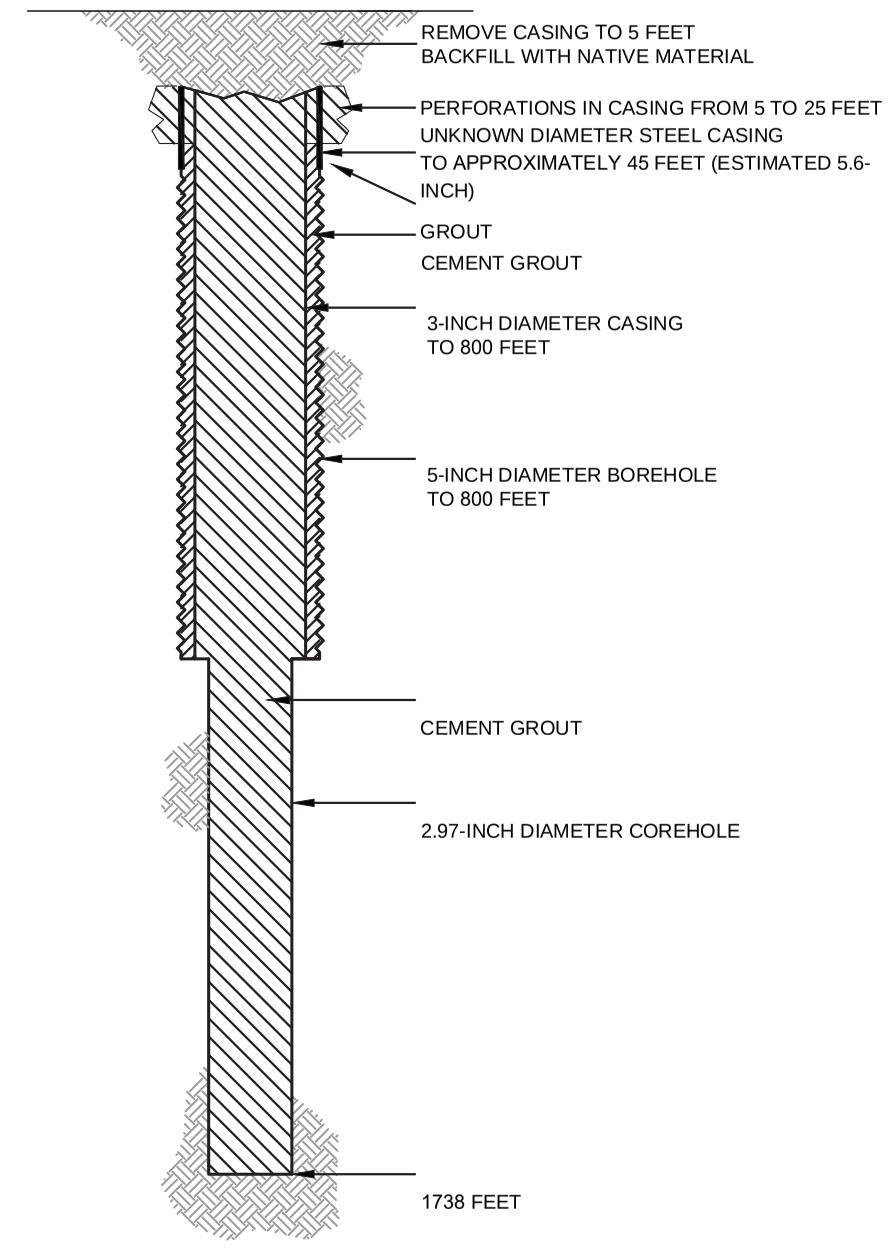

HALEY ALDRICH

FLORENCE COPPER, INC.
FLORENCE, ARIZONA

COREHOLE 110S DIAGRAM

FLORENCE COPPER INC.

NOT TO SCALE
SEPTEMBER 2019

FIGURE 1

MOBINI, GITA Printed: 4/21/2017 12:00 PM Layout: ABANDON (2)
G:\PROJECTS\CURIS RESOURCES\38706-CURIS FEASIBILITY\DRAWINGS\EPA\WELL ABANDON\415S_ABANDON.DWG

OMB No. 2040-0042 Approval Expires 4/30/2022

United States Environmental Protection Agency

WELL REWORK RECORD, PLUGGING AND ABANDONMENT PLAN, OR PLUGGING AND ABANDONMENT AFFIDAVIT

Name and Address, Phone Number and/or Email of Permittee

Florence Copper Project
1575 W Hunt Hwy,
Florence, AZ 85132

Permit or EPA ID Number	API Number	Full Well Name
R9UIC-AZ3-FY11-1		123MF

State	County
Arizona	Pinal

Locate well in two directions from nearest lines of quarter section and drilling unit

Surface Location

NW 1/4 of NE 1/4 of Section 33 Township 4S Range 9E

Latitude 33.04379962

Longitude -111.4297816

ft. from (N/S) Line of quarter section

ft. from (E/W) Line of quarter section.

Well Class	Timing of Action (pick one)	Type of Action (pick one)
☐ Class I ☐ Class II ☑ Class III ☐ Class V	☑ Notice Prior to Work Date Expected to Commence March 2021 ☐ Report After Work Date Work Ended	☐ Well Rework ☑ Plugging and Abandonment ☐ Conversion to a Non-Injection Well

Provide a narrative description of the work planned to be performed, or that was performed. Use additional pages as necessary. See instructions.

A workover rig capable of performing the required abandonment operations at the required depths will be moved in and set up over the core hole. The core hole will be inspected to determine the depth to which the hole remains open and if any obstructions are present in the core hole; the presence and condition of any existing collar will also be documented. If necessary, the core hole will be cleaned out to a depth of at least 100 feet below the bedrock-LBFU contact to enable placement of cement seals.

If collar is present, an attempt will be made to remove it. If removal of the collar is not feasible, it will be left in the hole and perforated as needed to allow an annular seal to be placed to a depth of at least 25 feet bgs. In areas of agricultural use, the surface casing will be cut at least 5 feet bgs and removed.

If the collar cannot be removed, it will be perforated from at least 20 feet below the bedrock-LBFU contact to at least 20 feet above the contact; from at least 20 feet below the base of the MFGU to at least 20 feet above the top of the MFGU; and from at least 25 feet bgs to 5 feet bgs.

A tremie pipe will be used to place Type V cement in the open core hole from the bottom of the core hole to the top of the core hole. Cement retainers, as described above, will be used to force cement grout into the annulus and behind perforated intervals, as necessary.

If the hole has been obstructed, as much cement as possible will be placed from 100 feet below the LBFU-bedrock contact to the top of the core hole.

The volume of Type V cement will be recorded and will not be less than the estimated volume of material required to fill each interval. All cement grout will consist of Type V cement, or equivalent approved in accordance with the UIC Permit.

Certification

I certify under the penalty of law that I have personally examined and am familiar with the information submitted in this document and all attachments and that, based on my inquiry of those individuals immediately responsible for obtaining the information, I believe that the information is true, accurate, and complete. I am aware that there are significant penalties for submitting false information, including the possibliity of fine and imprisonment. (Ref. 40 CFR § 144.32)

Name and Official Title *(Please type or print)*	Signature	Date Signed
Dan Johnson, VP - General Manager		10/3/2019

INSTRUCTIONS FOR FORM 7520-19

This form replaces forms 7520-12 and 7520-14. Use this form only when work is planned or has occurred that affects the well's construction or operation as an injection well, including work on the casing, tubing or packer (or for shallow Class V wells, the subsurface fluid emplacement network). Use one form per injection well. While reports or other information developed by contractors or service companies may be attached, this form must be signed by a responsible entity as described at 40 CFR 144.32. Note: operators closing Class V wells should use Form 7520-17.

NAME, ADDRESS, PHONE AND/OR EMAIL OF PERMITTEE: Enter the name and street address, city/town, state, and ZIP code of the permittee. Also provide an email address (if available) and/or a phone number.

PERMIT OR EPA ID NUMBER: Enter the well identification number or permit number assigned to the well by the EPA or the permitting authority.

API NUMBER: Enter the number assigned by the local jurisdiction (usually a State Oil and Gas Agency) using the American Petroleum Institute standard numbering system.

FULL WELL NAME: Enter the full name of the well or project.

Enter the **STATE** and **COUNTY** where the well is located. For States that do not have counties, use the name of that State's equivalent jurisdiction at a more local level.

WELL LOCATION: Fill in the complete township, range, and section to the nearest quarter-quarter section. A township is north or south of the baseline, and a range is east or west of the principal meridian (e.g., T12N, R34W). Also include the distance, in feet, from the nearest north or south line and nearest east or west line of the quarter-section. Also, enter the **latitude** and **longitude** of the well in decimal degrees, to five or six places if possible; be sure to include a negative sign for the longitude of a well in the Western Hemisphere and a negative sign for the latitude of a well in the Southern Hemisphere.

Enter the **WELL CLASS,** i.e., the class of injection well as defined in 40 CFR 144.6.

TIMING OF THE ACTION: Check ***Notice prior to work*** if the activity has not yet occurred (i.e., is planned). Check ***Report after work*** if the activity described has already occurred. As appropriate, include the date the activity is expected to start or the date the activity was completed. (Note this may not be available, e.g., for a plugging plan submitted with a permit application.)

TYPE OF ACTION: Check the appropriate box to describe the kind of activity being reported. Check ***Well Rework*** for work that was/will be performed on the well after it has already been in operation as an injection well. Check ***Plugging and Abandonment*** to report on plans for or descriptions of final closure/plugging after use as an injection well. Check ***Conversion to a Non-Injection Well*** if the well is to be converted to something other than an injection well.

Provide a **NARRATIVE DESCRIPTION** of the work planned to be performed, or that was performed. The narrative should include a description of the main procedures planned or that occurred during the work activity. A service company report, daily report, or similar document may be attached if it includes all the requested information and is clear and legible.

For well reworks, include the following information: The reason for the well rework; depths of activity; type of activity; changes to injection well configuration, well casing, or cement behind casing; any plug added to the well and its depth; any newly drilled interval and its depth; method(s) to demonstrate that the well has mechanical integrity (as applicable); and any deviations from the approved rework plan (as applicable).

For a well plugging plan, include the following information: Reason for the well plugging; number of plugs placed, and their depths; materials used as plugs (e.g., cast iron bridge plug, cement, cement retainer); method to set plugs; and wait-on-cement times, if any. Also provide one or more cost estimates from an independent firm in the business of plugging and abandoning wells to plug the well as described in the plan.

For well plugging affidavit, include the following information: Reason for the well plugging; number of plugs placed, and their depths; materials used as plugs (e.g., cast iron bridge plug, cement, cement retainer); method to set plugs; wait-on-cement times, if any; and any deviations from the approved plugging plan (if applicable).

For conversion to a non-injection well, include the following information: Depths of activity; type of activity; changes to injection well configuration, well casing, or cement behind casing; any plug added to the well and its depth; any newly drilled interval and its depth; depths of new perforations; and method(s) to demonstrate that the well has mechanical integrity (as applicable).

For all of the above activities, include a well sketch depicting the work, results of well tests/logging performed, service company tickets, and any other available information demonstrating how the work was/is to be performed. Also, specify whether depths are below ground surface, relative to Kelly bushing, etc.

CERTIFICATION: This form must be signed and dated by either: a responsible corporate officer for a corporation, by a general partner for a partnership, by the proprietor of a sole proprietorship, or by a principal executive or ranking elected official for a public agency.

PAPERWORK REDUCTION ACT NOTICE: The public reporting and recordkeeping burden for this collection of information is estimated to average between 6.0 and 7.9 hours per response, depending on the injection well class. Burden means the total time, effort, or financial resource expended by persons to generate, maintain, retain, or disclose or provide information to or for a Federal Agency. This includes the time needed to review instructions; develop, acquire, install, and utilize technology and systems for the purposes of collecting, validating, and verifying information, processing and maintaining information, and disclosing and providing information; adjust the existing ways to comply with any previously applicable instructions and requirements; train personnel to be able to respond to the collection of information; search data sources; complete and review the collection of information; and, transmit or otherwise disclose the information. An agency may not conduct or sponsor, and a person is not required to respond to, a collection of information unless it displays a currently valid OMB control number. Send comments on the Agency's need for this information, the accuracy of the provided burden estimates, and any suggested methods for minimizing respondent burden, including the use of automated collection techniques to Director, Collection Strategies Division, U.S. Environmental Protection Agency (2822), 1200 Pennsylvania Ave., NW., Washington, D.C. 20460. Include the OMB control number in any correspondence. Do not send the completed forms to this address.

AS-BUILT COREHOLE 123MF

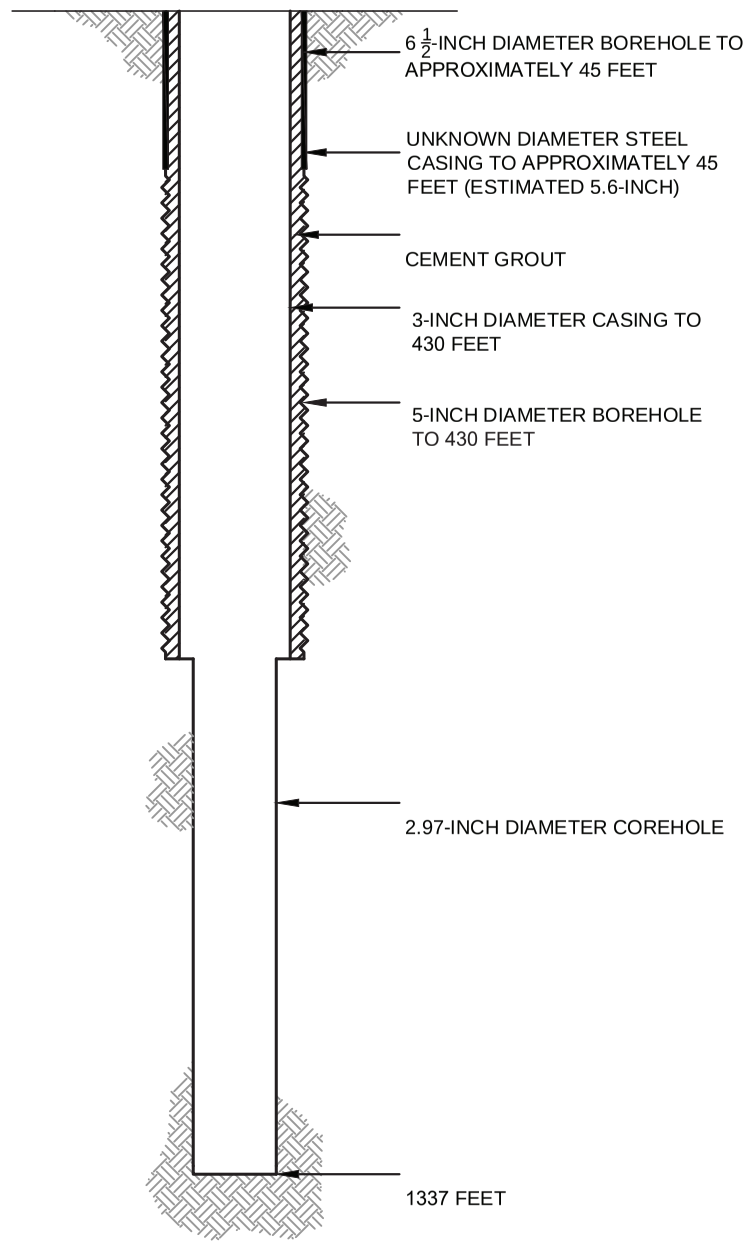

PROPOSED PLUGGING AND ABANDONMENT COREHOLE 123MF

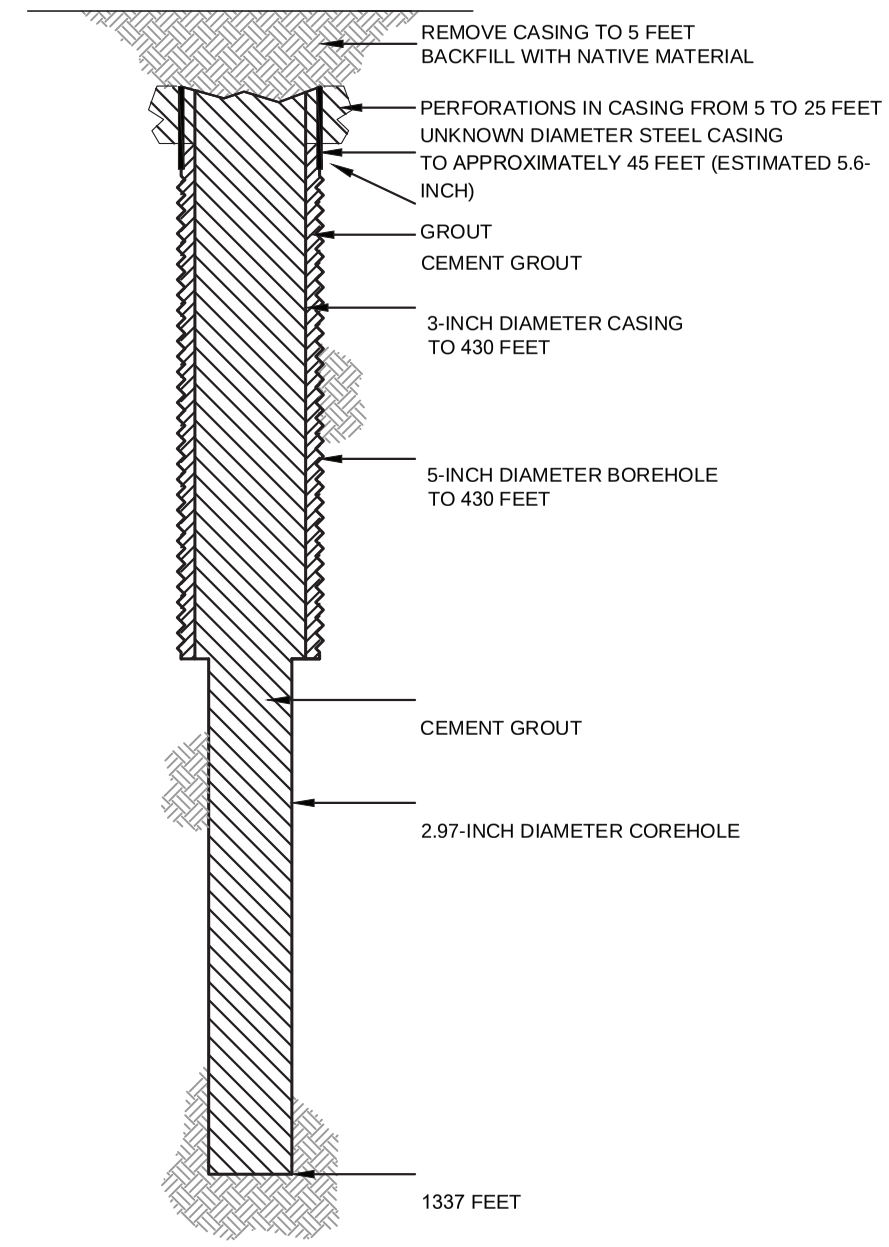

HALEY ALDRICH

FLORENCE COPPER, INC.
FLORENCE, ARIZONA

COREHOLE 123MF DIAGRAM

FLORENCE COPPER INC.

NOT TO SCALE
SEPTEMBER 2019

FIGURE 1

MOBINI, GITA Printed: 4/21/2017 12:00 PM Layout: ABANDON (2)
G:\PROJECTS\CURIS RESOURCES\38706-CURIS FEASIBILITY\DRAWINGS\EPA\WELL ABANDON\415S_ABANDON.DWG

OMB No. 2040-0042 Approval Expires 4/30/2022

United States Environmental Protection Agency

EPA

WELL REWORK RECORD, PLUGGING AND ABANDONMENT PLAN, OR PLUGGING AND ABANDONMENT AFFIDAVIT

Name and Address, Phone Number and/or Email of Permittee

Florence Copper Project
1575 W Hunt Hwy,
Florence, AZ 85132

Permit or EPA ID Number	API Number	Full Well Name
R9UIC-AZ3-FY11-1		124MF

State	County
Arizona	Pinal

Locate well in two directions from nearest lines of quarter section and drilling unit

Latitude 33.04851744

Longitude -111.4265091

Surface Location

SW **1/4 of** SE **1/4 of Section** 28 **Township** 4S **Range** 9E

_____ **ft. from (N/S)** _____ **Line of quarter section**

_____ **ft. from (E/W)** _____ **Line of quarter section.**

Well Class	Timing of Action (pick one)	Type of Action (pick one)
☐ Class I ☐ Class II ☑ Class III ☐ Class V	☑ Notice Prior to Work Date Expected to Commence March 2021 ☐ Report After Work Date Work Ended	☐ Well Rework ☑ Plugging and Abandonment ☐ Conversion to a Non-Injection Well

Provide a narrative description of the work planned to be performed, or that was performed. Use additional pages as necessary. See instructions.

A workover rig capable of performing the required abandonment operations at the required depths will be moved in and set up over the core hole. The core hole will be inspected to determine the depth to which the hole remains open and if any obstructions are present in the core hole; the presence and condition of any existing collar will also be documented. If necessary, the core hole will be cleaned out to a depth of at least 100 feet below the bedrock-LBFU contact to enable placement of cement seals.

If collar is present, an attempt will be made to remove it. If removal of the collar is not feasible, it will be left in the hole and perforated as needed to allow an annular seal to be placed to a depth of at least 25 feet bgs. In areas of agricultural use, the surface casing will be cut at least 5 feet bgs and removed.

If the collar cannot be removed, it will be perforated from at least 20 feet below the bedrock-LBFU contact to at least 20 feet above the contact; from at least 20 feet below the base of the MFGU to at least 20 feet above the top of the MFGU; and from at least 25 feet bgs to 5 feet bgs.

A tremie pipe will be used to place Type V cement in the open core hole from the bottom of the core hole to the top of the core hole. Cement retainers, as described above, will be used to force cement grout into the annulus and behind perforated intervals, as necessary.

If the hole has been obstructed, as much cement as possible will be placed from 100 feet below the LBFU-bedrock contact to the top of the core hole.

The volume of Type V cement will be recorded and will not be less than the estimated volume of material required to fill each interval. All cement grout will consist of Type V cement, or equivalent approved in accordance with the UIC Permit.

Certification

I certify under the penalty of law that I have personally examined and am familiar with the information submitted in this document and all attachments and that, based on my inquiry of those individuals immediately responsible for obtaining the information, I believe that the information is true, accurate, and complete. I am aware that there are significant penalties for submitting false information, including the possibliity of fine and imprisonment. (Ref. 40 CFR § 144.32)

Name and Official Title *(Please type or print)*	Signature	Date Signed
Dan Johnson, VP - General Manager		10/3/2019

INSTRUCTIONS FOR FORM 7520-19

This form replaces forms 7520-12 and 7520-14. Use this form only when work is planned or has occurred that affects the well's construction or operation as an injection well, including work on the casing, tubing or packer (or for shallow Class V wells, the subsurface fluid emplacement network). Use one form per injection well. While reports or other information developed by contractors or service companies may be attached, this form must be signed by a responsible entity as described at 40 CFR 144.32. Note: operators closing Class V wells should use Form 7520-17.

NAME, ADDRESS, PHONE AND/OR EMAIL OF PERMITTEE: Enter the name and street address, city/town, state, and ZIP code of the permittee. Also provide an email address (if available) and/or a phone number.

PERMIT OR EPA ID NUMBER: Enter the well identification number or permit number assigned to the well by the EPA or the permitting authority.

API NUMBER: Enter the number assigned by the local jurisdiction (usually a State Oil and Gas Agency) using the American Petroleum Institute standard numbering system.

FULL WELL NAME: Enter the full name of the well or project.

Enter the **STATE** and **COUNTY** where the well is located. For States that do not have counties, use the name of that State's equivalent jurisdiction at a more local level.

WELL LOCATION: Fill in the complete township, range, and section to the nearest quarter-quarter section. A township is north or south of the baseline, and a range is east or west of the principal meridian (e.g., T12N, R34W). Also include the distance, in feet, from the nearest north or south line and nearest east or west line of the quarter-section. Also, enter the **latitude** and **longitude** of the well in decimal degrees, to five or six places if possible; be sure to include a negative sign for the longitude of a well in the Western Hemisphere and a negative sign for the latitude of a well in the Southern Hemisphere.

Enter the **WELL CLASS,** i.e., the class of injection well as defined in 40 CFR 144.6.

TIMING OF THE ACTION: Check ***Notice prior to work*** if the activity has not yet occurred (i.e., is planned). Check ***Report after work*** if the activity described has already occurred. As appropriate, include the date the activity is expected to start or the date the activity was completed. (Note this may not be available, e.g., for a plugging plan submitted with a permit application.)

TYPE OF ACTION: Check the appropriate box to describe the kind of activity being reported. Check ***Well Rework*** for work that was/will be performed on the well after it has already been in operation as an injection well. Check ***Plugging and Abandonment*** to report on plans for or descriptions of final closure/plugging after use as an injection well. Check ***Conversion to a Non-Injection Well*** if the well is to be converted to something other than an injection well.

Provide a **NARRATIVE DESCRIPTION** of the work planned to be performed, or that was performed. The narrative should include a description of the main procedures planned or that occurred during the work activity. A service company report, daily report, or similar document may be attached if it includes all the requested information and is clear and legible.

For well reworks, include the following information: The reason for the well rework; depths of activity; type of activity; changes to injection well configuration, well casing, or cement behind casing; any plug added to the well and its depth; any newly drilled interval and its depth; method(s) to demonstrate that the well has mechanical integrity (as applicable); and any deviations from the approved rework plan (as applicable).

For a well plugging plan, include the following information: Reason for the well plugging; number of plugs placed, and their depths; materials used as plugs (e.g., cast iron bridge plug, cement, cement retainer); method to set plugs; and wait-on-cement times, if any. Also provide one or more cost estimates from an independent firm in the business of plugging and abandoning wells to plug the well as described in the plan.

For well plugging affidavit, include the following information: Reason for the well plugging; number of plugs placed, and their depths; materials used as plugs (e.g., cast iron bridge plug, cement, cement retainer); method to set plugs; wait-on-cement times, if any; and any deviations from the approved plugging plan (if applicable).

For conversion to a non-injection well, include the following information: Depths of activity; type of activity; changes to injection well configuration, well casing, or cement behind casing; any plug added to the well and its depth; any newly drilled interval and its depth; depths of new perforations; and method(s) to demonstrate that the well has mechanical integrity (as applicable).

For all of the above activities, include a well sketch depicting the work, results of well tests/logging performed, service company tickets, and any other available information demonstrating how the work was/is to be performed. Also, specify whether depths are below ground surface, relative to Kelly bushing, etc.

CERTIFICATION: This form must be signed and dated by either: a responsible corporate officer for a corporation, by a general partner for a partnership, by the proprietor of a sole proprietorship, or by a principal executive or ranking elected official for a public agency.

PAPERWORK REDUCTION ACT NOTICE: The public reporting and recordkeeping burden for this collection of information is estimated to average between 6.0 and 7.9 hours per response, depending on the injection well class. Burden means the total time, effort, or financial resource expended by persons to generate, maintain, retain, or disclose or provide information to or for a Federal Agency. This includes the time needed to review instructions; develop, acquire, install, and utilize technology and systems for the purposes of collecting, validating, and verifying information, processing and maintaining information, and disclosing and providing information; adjust the existing ways to comply with any previously applicable instructions and requirements; train personnel to be able to respond to the collection of information; search data sources; complete and review the collection of information; and, transmit or otherwise disclose the information. An agency may not conduct or sponsor, and a person is not required to respond to, a collection of information unless it displays a currently valid OMB control number. Send comments on the Agency's need for this information, the accuracy of the provided burden estimates, and any suggested methods for minimizing respondent burden, including the use of automated collection techniques to Director, Collection Strategies Division, U.S. Environmental Protection Agency (2822), 1200 Pennsylvania Ave., NW., Washington, D.C. 20460. Include the OMB control number in any correspondence. Do not send the completed forms to this address.

AS-BUILT COREHOLE 124MF

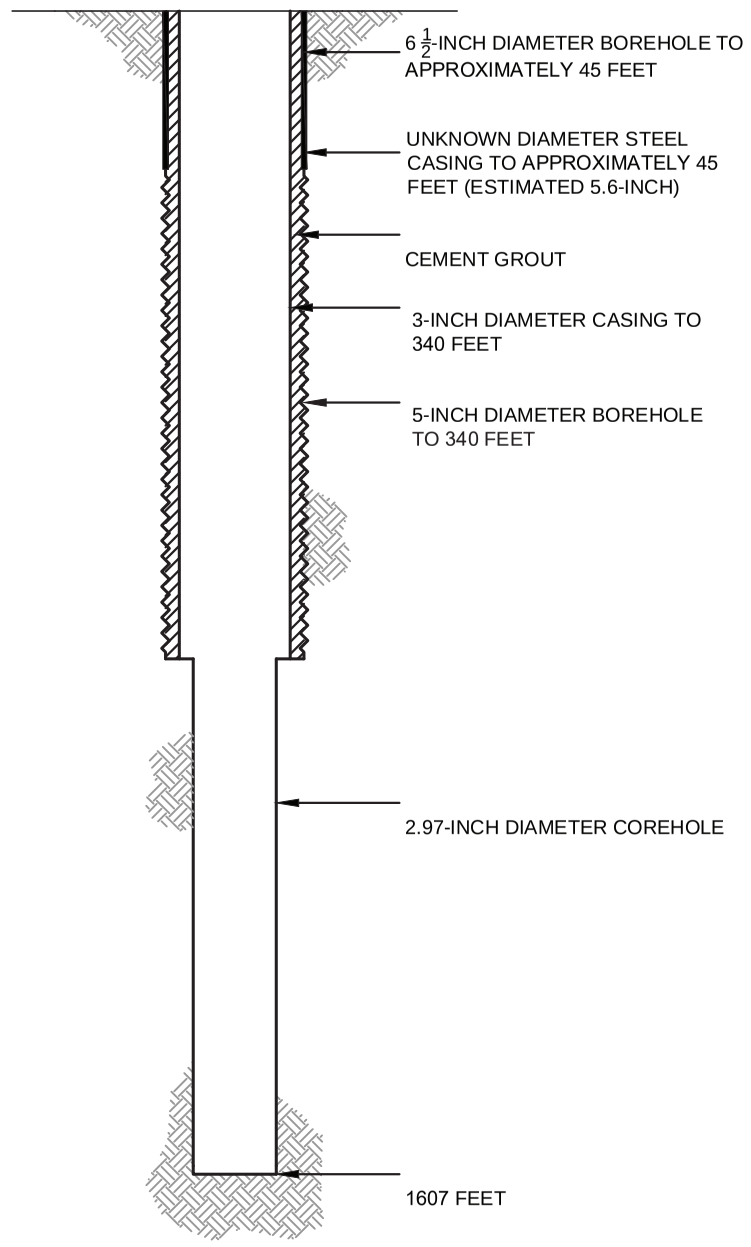

PROPOSED PLUGGING AND ABANDONMENT COREHOLE 124MF

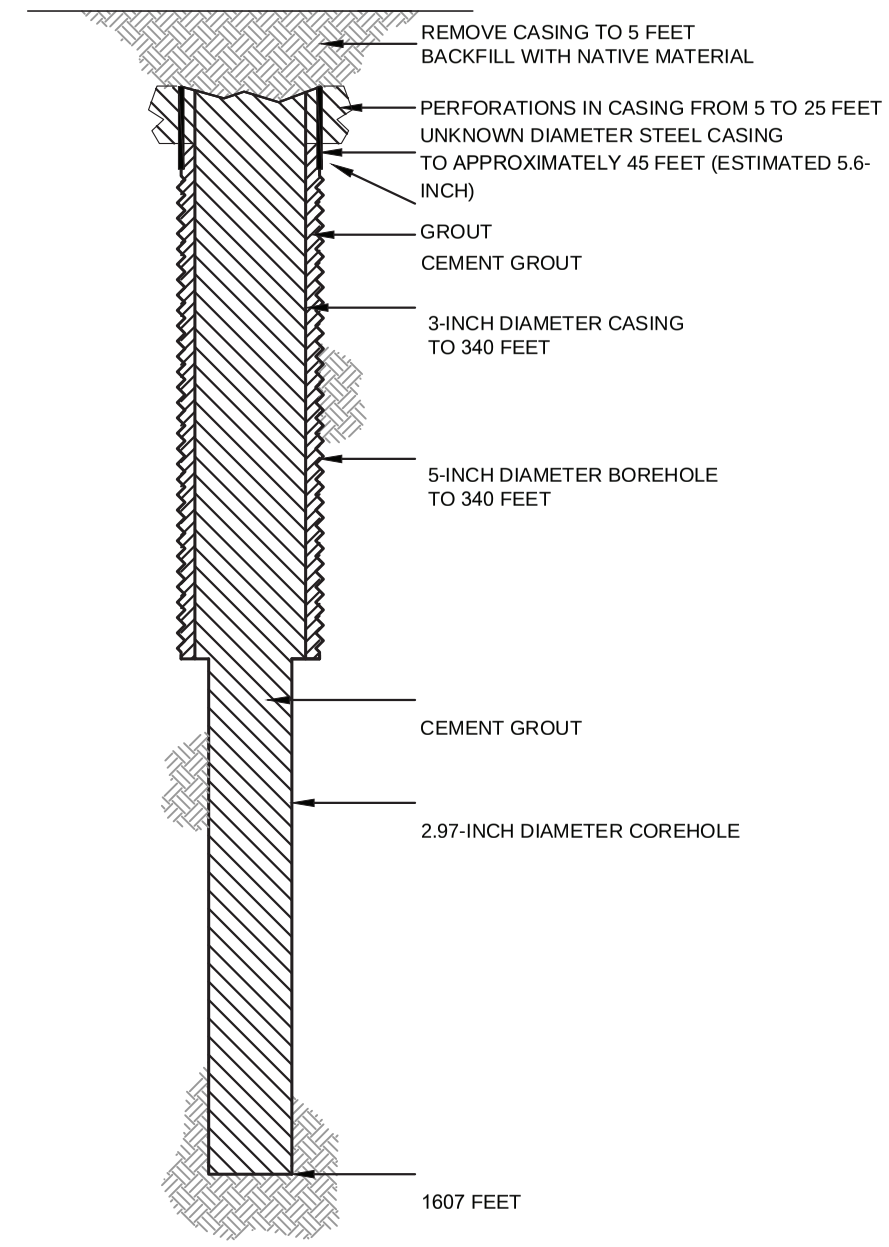

HALEY ALDRICH

FLORENCE COPPER, INC.
FLORENCE, ARIZONA

COREHOLE 124MF DIAGRAM

FLORENCE COPPER INC.

NOT TO SCALE
SEPTEMBER 2019

FIGURE 1

MOBINI, GITA Printed: 4/21/2017 12:00 PM Layout: ABANDON (2)
G:\PROJECTS\CURIS RESOURCES\38706-CURIS FEASIBILITY\DRAWINGS\EPA\WELL ABANDON\415S_ABANDON.DWG

OMB No. 2040-0042 Approval Expires 4/30/2022

United States Environmental Protection Agency

WELL REWORK RECORD, PLUGGING AND ABANDONMENT PLAN, OR PLUGGING AND ABANDONMENT AFFIDAVIT

Name and Address, Phone Number and/or Email of Permittee

Florence Copper Project
1575 W Hunt Hwy,
Florence, AZ 85132

Permit or EPA ID Number	API Number	Full Well Name
R9UIC-AZ3-FY11-1		127MF

State	County
Arizona	Pinal

Locate well in two directions from nearest lines of quarter section and drilling unit

Surface Location

NW 1/4 of NW 1/4 of Section 33 Township 4S Range 9E

Latitude 33.04380593

Longitude -111.4346629

_____ ft. from (N/S) _____ Line of quarter section

_____ ft. from (E/W) _____ Line of quarter section.

Well Class	Timing of Action (pick one)	Type of Action (pick one)
☐ Class I ☐ Class II ☑ Class III ☐ Class V	☑ Notice Prior to Work Date Expected to Commence March 2021 ☐ Report After Work Date Work Ended	☐ Well Rework ☑ Plugging and Abandonment ☐ Conversion to a Non-Injection Well

Provide a narrative description of the work planned to be performed, or that was performed. Use additional pages as necessary. See instructions.

A workover rig capable of performing the required abandonment operations at the required depths will be moved in and set up over the core hole. The core hole will be inspected to determine the depth to which the hole remains open and if any obstructions are present in the core hole; the presence and condition of any existing collar will also be documented. If necessary, the core hole will be cleaned out to a depth of at least 100 feet below the bedrock-LBFU contact to enable placement of cement seals.

If collar is present, an attempt will be made to remove it. If removal of the collar is not feasible, it will be left in the hole and perforated as needed to allow an annular seal to be placed to a depth of at least 25 feet bgs. In areas of agricultural use, the surface casing will be cut at least 5 feet bgs and removed.

If the collar cannot be removed, it will be perforated from at least 20 feet below the bedrock-LBFU contact to at least 20 feet above the contact; from at least 20 feet below the base of the MFGU to at least 20 feet above the top of the MFGU; and from at least 25 feet bgs to 5 feet bgs.

A tremie pipe will be used to place Type V cement in the open core hole from the bottom of the core hole to the top of the core hole. Cement retainers, as described above, will be used to force cement grout into the annulus and behind perforated intervals, as necessary.

If the hole has been obstructed, as much cement as possible will be placed from 100 feet below the LBFU-bedrock contact to the top of the core hole.

The volume of Type V cement will be recorded and will not be less than the estimated volume of material required to fill each interval. All cement grout will consist of Type V cement, or equivalent approved in accordance with the UIC Permit.

Certification

I certify under the penalty of law that I have personally examined and am familiar with the information submitted in this document and all attachments and that, based on my inquiry of those individuals immediately responsible for obtaining the information, I believe that the information is true, accurate, and complete. I am aware that there are significant penalties for submitting false information, including the possibliity of fine and imprisonment. (Ref. 40 CFR § 144.32)

Name and Official Title *(Please type or print)*	Signature	Date Signed
Dan Johnson, VP - General Manager		10/3/2019

INSTRUCTIONS FOR FORM 7520-19

This form replaces forms 7520-12 and 7520-14. Use this form only when work is planned or has occurred that affects the well's construction or operation as an injection well, including work on the casing, tubing or packer (or for shallow Class V wells, the subsurface fluid emplacement network). Use one form per injection well. While reports or other information developed by contractors or service companies may be attached, this form must be signed by a responsible entity as described at 40 CFR 144.32. Note: operators closing Class V wells should use Form 7520-17.

NAME, ADDRESS, PHONE AND/OR EMAIL OF PERMITTEE: Enter the name and street address, city/town, state, and ZIP code of the permittee. Also provide an email address (if available) and/or a phone number.

PERMIT OR EPA ID NUMBER: Enter the well identification number or permit number assigned to the well by the EPA or the permitting authority.

API NUMBER: Enter the number assigned by the local jurisdiction (usually a State Oil and Gas Agency) using the American Petroleum Institute standard numbering system.

FULL WELL NAME: Enter the full name of the well or project.

Enter the **STATE** and **COUNTY** where the well is located. For States that do not have counties, use the name of that State's equivalent jurisdiction at a more local level.

WELL LOCATION: Fill in the complete township, range, and section to the nearest quarter-quarter section. A township is north or south of the baseline, and a range is east or west of the principal meridian (e.g., T12N, R34W). Also include the distance, in feet, from the nearest north or south line and nearest east or west line of the quarter-section. Also, enter the **latitude** and **longitude** of the well in decimal degrees, to five or six places if possible; be sure to include a negative sign for the longitude of a well in the Western Hemisphere and a negative sign for the latitude of a well in the Southern Hemisphere.

Enter the **WELL CLASS,** i.e., the class of injection well as defined in 40 CFR 144.6.

TIMING OF THE ACTION: Check ***Notice prior to work*** if the activity has not yet occurred (i.e., is planned). Check ***Report after work*** if the activity described has already occurred. As appropriate, include the date the activity is expected to start or the date the activity was completed. (Note this may not be available, e.g., for a plugging plan submitted with a permit application.)

TYPE OF ACTION: Check the appropriate box to describe the kind of activity being reported. Check ***Well Rework*** for work that was/will be performed on the well after it has already been in operation as an injection well. Check ***Plugging and Abandonment*** to report on plans for or descriptions of final closure/plugging after use as an injection well. Check ***Conversion to a Non-Injection Well*** if the well is to be converted to something other than an injection well.

Provide a **NARRATIVE DESCRIPTION** of the work planned to be performed, or that was performed. The narrative should include a description of the main procedures planned or that occurred during the work activity. A service company report, daily report, or similar document may be attached if it includes all the requested information and is clear and legible.

For well reworks, include the following information: The reason for the well rework; depths of activity; type of activity; changes to injection well configuration, well casing, or cement behind casing; any plug added to the well and its depth; any newly drilled interval and its depth; method(s) to demonstrate that the well has mechanical integrity (as applicable); and any deviations from the approved rework plan (as applicable).

For a well plugging plan, include the following information: Reason for the well plugging; number of plugs placed, and their depths; materials used as plugs (e.g., cast iron bridge plug, cement, cement retainer); method to set plugs; and wait-on-cement times, if any. Also provide one or more cost estimates from an independent firm in the business of plugging and abandoning wells to plug the well as described in the plan.

For well plugging affidavit, include the following information: Reason for the well plugging; number of plugs placed, and their depths; materials used as plugs (e.g., cast iron bridge plug, cement, cement retainer); method to set plugs; wait-on-cement times, if any; and any deviations from the approved plugging plan (if applicable).

For conversion to a non-injection well, include the following information: Depths of activity; type of activity; changes to injection well configuration, well casing, or cement behind casing; any plug added to the well and its depth; any newly drilled interval and its depth; depths of new perforations; and method(s) to demonstrate that the well has mechanical integrity (as applicable).

For all of the above activities, include a well sketch depicting the work, results of well tests/logging performed, service company tickets, and any other available information demonstrating how the work was/is to be performed. Also, specify whether depths are below ground surface, relative to Kelly bushing, etc.

CERTIFICATION: This form must be signed and dated by either: a responsible corporate officer for a corporation, by a general partner for a partnership, by the proprietor of a sole proprietorship, or by a principal executive or ranking elected official for a public agency.

PAPERWORK REDUCTION ACT NOTICE: The public reporting and recordkeeping burden for this collection of information is estimated to average between 6.0 and 7.9 hours per response, depending on the injection well class. Burden means the total time, effort, or financial resource expended by persons to generate, maintain, retain, or disclose or provide information to or for a Federal Agency. This includes the time needed to review instructions; develop, acquire, install, and utilize technology and systems for the purposes of collecting, validating, and verifying information, processing and maintaining information, and disclosing and providing information; adjust the existing ways to comply with any previously applicable instructions and requirements; train personnel to be able to respond to the collection of information; search data sources; complete and review the collection of information; and, transmit or otherwise disclose the information. An agency may not conduct or sponsor, and a person is not required to respond to, a collection of information unless it displays a currently valid OMB control number. Send comments on the Agency's need for this information, the accuracy of the provided burden estimates, and any suggested methods for minimizing respondent burden, including the use of automated collection techniques to Director, Collection Strategies Division, U.S. Environmental Protection Agency (2822), 1200 Pennsylvania Ave., NW., Washington, D.C. 20460. Include the OMB control number in any correspondence. Do not send the completed forms to this address.

AS-BUILT COREHOLE 127MF

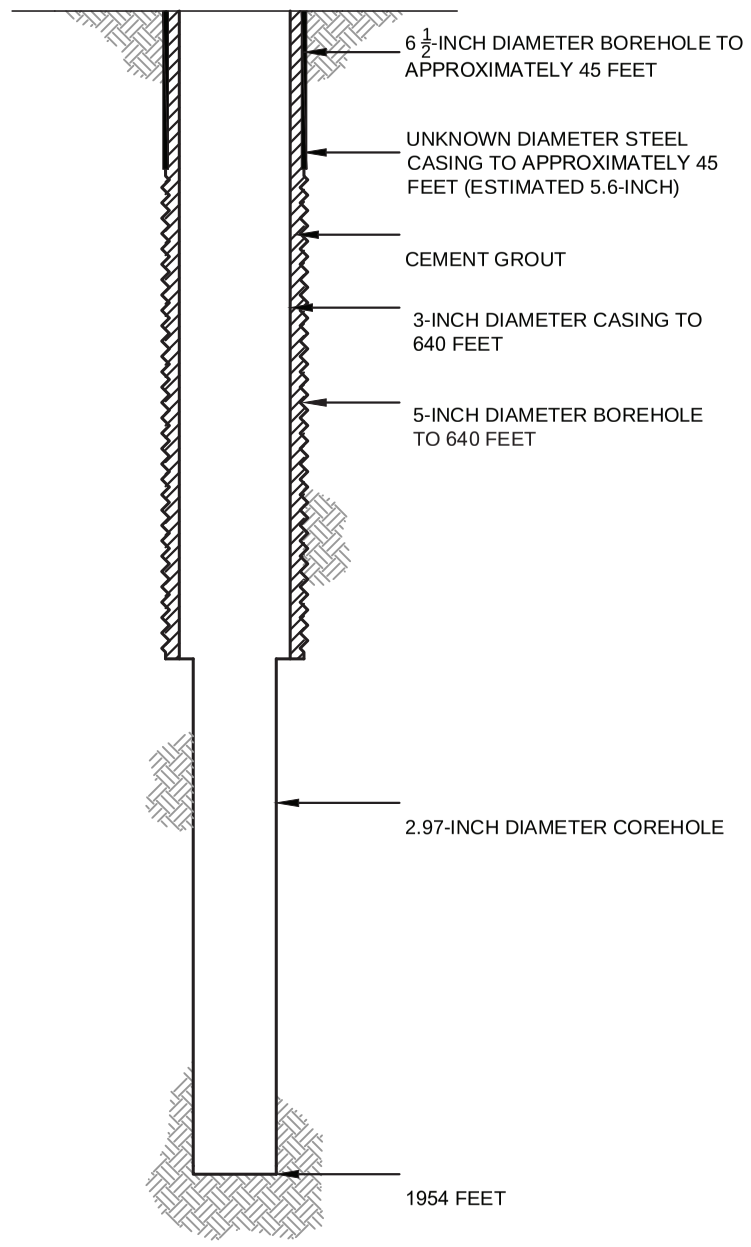

PROPOSED PLUGGING AND ABANDONMENT COREHOLE 127MF

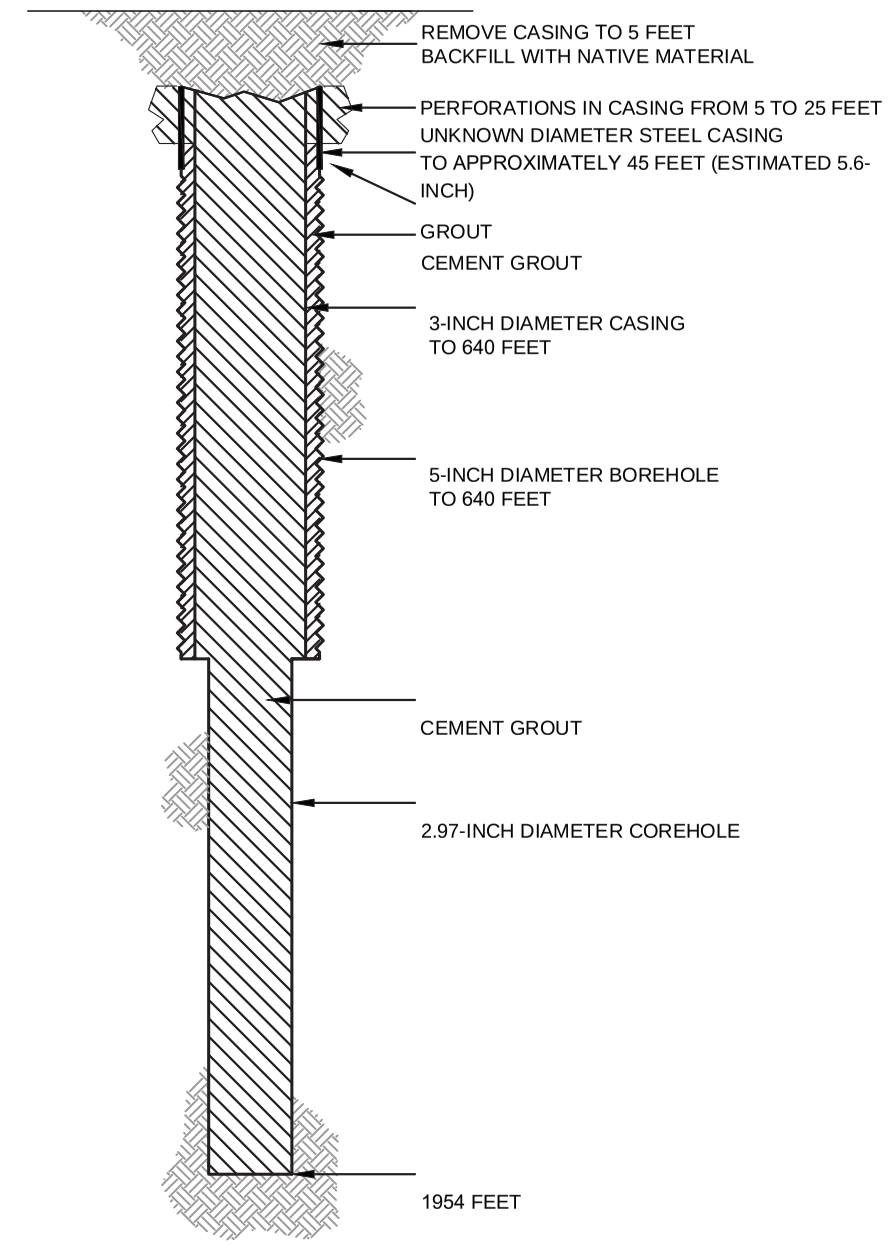

HALEY ALDRICH

FLORENCE COPPER, INC.
FLORENCE, ARIZONA

COREHOLE 127MF DIAGRAM

FLORENCE COPPER INC.

NOT TO SCALE
SEPTEMBER 2019

FIGURE 1

MOBINI, GITA Printed: 4/21/2017 12:00 PM Layout: ABANDON (2)
G:\PROJECTS\CURIS RESOURCES\38706-CURIS FEASIBILITY\DRAWINGS\EPA\WELL ABANDON\415S_ABANDON.DWG

OMB No. 2040-0042 Approval Expires 4/30/2022

United States Environmental Protection Agency

EPA

WELL REWORK RECORD, PLUGGING AND ABANDONMENT PLAN, OR PLUGGING AND ABANDONMENT AFFIDAVIT

Name and Address, Phone Number and/or Email of Permittee

Florence Copper Project
1575 W Hunt Hwy,
Florence, AZ 85132

Permit or EPA ID Number	API Number	Full Well Name
R9UIC-AZ3-FY11-1		128MF

State	County
Arizona	Pinal

Locate well in two directions from nearest lines of quarter section and drilling unit

Surface Location

SW 1/4 of NW 1/4 of Section 28 Township 4S Range 9E

Latitude 33.05334643

Longitude -111.4346063

_____ ft. from (N/S) _____ Line of quarter section

_____ ft. from (E/W) _____ Line of quarter section.

Well Class	Timing of Action (pick one)	Type of Action (pick one)
☐ Class I ☐ Class II ☑ Class III ☐ Class V	☑ Notice Prior to Work Date Expected to Commence March 2021 ☐ Report After Work Date Work Ended	☐ Well Rework ☑ Plugging and Abandonment ☐ Conversion to a Non-Injection Well

Provide a narrative description of the work planned to be performed, or that was performed. Use additional pages as necessary. See instructions.

A workover rig capable of performing the required abandonment operations at the required depths will be moved in and set up over the core hole. The core hole will be inspected to determine the depth to which the hole remains open and if any obstructions are present in the core hole; the presence and condition of any existing collar will also be documented. If necessary, the core hole will be cleaned out to a depth of at least 100 feet below the bedrock-LBFU contact to enable placement of cement seals.

If collar is present, an attempt will be made to remove it. If removal of the collar is not feasible, it will be left in the hole and perforated as needed to allow an annular seal to be placed to a depth of at least 25 feet bgs. In areas of agricultural use, the surface casing will be cut at least 5 feet bgs and removed.

If the collar cannot be removed, it will be perforated from at least 20 feet below the bedrock-LBFU contact to at least 20 feet above the contact; from at least 20 feet below the base of the MFGU to at least 20 feet above the top of the MFGU; and from at least 25 feet bgs to 5 feet bgs.

A tremie pipe will be used to place Type V cement in the open core hole from the bottom of the core hole to the top of the core hole. Cement retainers, as described above, will be used to force cement grout into the annulus and behind perforated intervals, as necessary.

If the hole has been obstructed, as much cement as possible will be placed from 100 feet below the LBFU-bedrock contact to the top of the core hole.

The volume of Type V cement will be recorded and will not be less than the estimated volume of material required to fill each interval. All cement grout will consist of Type V cement, or equivalent approved in accordance with the UIC Permit.

Certification

I certify under the penalty of law that I have personally examined and am familiar with the information submitted in this document and all attachments and that, based on my inquiry of those individuals immediately responsible for obtaining the information, I believe that the information is true, accurate, and complete. I am aware that there are significant penalties for submitting false information, including the possibliity of fine and imprisonment. (Ref. 40 CFR § 144.32)

Name and Official Title *(Please type or print)*	Signature	Date Signed
Dan Johnson, VP - General Manager		10/3/2019

INSTRUCTIONS FOR FORM 7520-19

This form replaces forms 7520-12 and 7520-14. Use this form only when work is planned or has occurred that affects the well's construction or operation as an injection well, including work on the casing, tubing or packer (or for shallow Class V wells, the subsurface fluid emplacement network). Use one form per injection well. While reports or other information developed by contractors or service companies may be attached, this form must be signed by a responsible entity as described at 40 CFR 144.32. Note: operators closing Class V wells should use Form 7520-17.

NAME, ADDRESS, PHONE AND/OR EMAIL OF PERMITTEE: Enter the name and street address, city/town, state, and ZIP code of the permittee. Also provide an email address (if available) and/or a phone number.

PERMIT OR EPA ID NUMBER: Enter the well identification number or permit number assigned to the well by the EPA or the permitting authority.

API NUMBER: Enter the number assigned by the local jurisdiction (usually a State Oil and Gas Agency) using the American Petroleum Institute standard numbering system.

FULL WELL NAME: Enter the full name of the well or project.

Enter the **STATE** and **COUNTY** where the well is located. For States that do not have counties, use the name of that State's equivalent jurisdiction at a more local level.

WELL LOCATION: Fill in the complete township, range, and section to the nearest quarter-quarter section. A township is north or south of the baseline, and a range is east or west of the principal meridian (e.g., T12N, R34W). Also include the distance, in feet, from the nearest north or south line and nearest east or west line of the quarter-section. Also, enter the **latitude** and **longitude** of the well in decimal degrees, to five or six places if possible; be sure to include a negative sign for the longitude of a well in the Western Hemisphere and a negative sign for the latitude of a well in the Southern Hemisphere.

Enter the **WELL CLASS,** i.e., the class of injection well as defined in 40 CFR 144.6.

TIMING OF THE ACTION: Check ***Notice prior to work*** if the activity has not yet occurred (i.e., is planned). Check ***Report after work*** if the activity described has already occurred. As appropriate, include the date the activity is expected to start or the date the activity was completed. (Note this may not be available, e.g., for a plugging plan submitted with a permit application.)

TYPE OF ACTION: Check the appropriate box to describe the kind of activity being reported. Check ***Well Rework*** for work that was/will be performed on the well after it has already been in operation as an injection well. Check ***Plugging and Abandonment*** to report on plans for or descriptions of final closure/plugging after use as an injection well. Check ***Conversion to a Non-Injection Well*** if the well is to be converted to something other than an injection well.

Provide a **NARRATIVE DESCRIPTION** of the work planned to be performed, or that was performed. The narrative should include a description of the main procedures planned or that occurred during the work activity. A service company report, daily report, or similar document may be attached if it includes all the requested information and is clear and legible.

For well reworks, include the following information: The reason for the well rework; depths of activity; type of activity; changes to injection well configuration, well casing, or cement behind casing; any plug added to the well and its depth; any newly drilled interval and its depth; method(s) to demonstrate that the well has mechanical integrity (as applicable); and any deviations from the approved rework plan (as applicable).

For a well plugging plan, include the following information: Reason for the well plugging; number of plugs placed, and their depths; materials used as plugs (e.g., cast iron bridge plug, cement, cement retainer); method to set plugs; and wait-on-cement times, if any. Also provide one or more cost estimates from an independent firm in the business of plugging and abandoning wells to plug the well as described in the plan.

For well plugging affidavit, include the following information: Reason for the well plugging; number of plugs placed, and their depths; materials used as plugs (e.g., cast iron bridge plug, cement, cement retainer); method to set plugs; wait-on-cement times, if any; and any deviations from the approved plugging plan (if applicable).

For conversion to a non-injection well, include the following information: Depths of activity; type of activity; changes to injection well configuration, well casing, or cement behind casing; any plug added to the well and its depth; any newly drilled interval and its depth; depths of new perforations; and method(s) to demonstrate that the well has mechanical integrity (as applicable).

For all of the above activities, include a well sketch depicting the work, results of well tests/logging performed, service company tickets, and any other available information demonstrating how the work was/is to be performed. Also, specify whether depths are below ground surface, relative to Kelly bushing, etc.

CERTIFICATION: This form must be signed and dated by either: a responsible corporate officer for a corporation, by a general partner for a partnership, by the proprietor of a sole proprietorship, or by a principal executive or ranking elected official for a public agency.

PAPERWORK REDUCTION ACT NOTICE: The public reporting and recordkeeping burden for this collection of information is estimated to average between 6.0 and 7.9 hours per response, depending on the injection well class. Burden means the total time, effort, or financial resource expended by persons to generate, maintain, retain, or disclose or provide information to or for a Federal Agency. This includes the time needed to review instructions; develop, acquire, install, and utilize technology and systems for the purposes of collecting, validating, and verifying information, processing and maintaining information, and disclosing and providing information; adjust the existing ways to comply with any previously applicable instructions and requirements; train personnel to be able to respond to the collection of information; search data sources; complete and review the collection of information; and, transmit or otherwise disclose the information. An agency may not conduct or sponsor, and a person is not required to respond to, a collection of information unless it displays a currently valid OMB control number. Send comments on the Agency's need for this information, the accuracy of the provided burden estimates, and any suggested methods for minimizing respondent burden, including the use of automated collection techniques to Director, Collection Strategies Division, U.S. Environmental Protection Agency (2822), 1200 Pennsylvania Ave., NW., Washington, D.C. 20460. Include the OMB control number in any correspondence. Do not send the completed forms to this address.

AS-BUILT COREHOLE 128MF

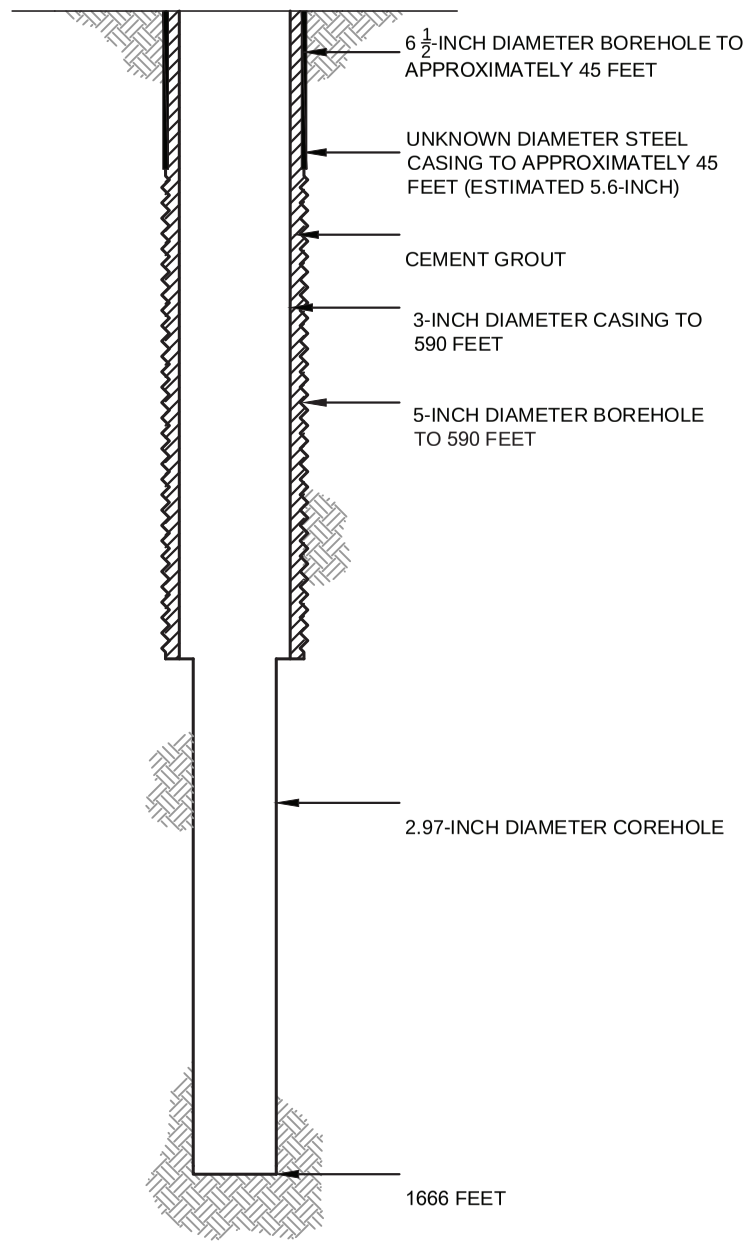

PROPOSED PLUGGING AND ABANDONMENT COREHOLE 128MF

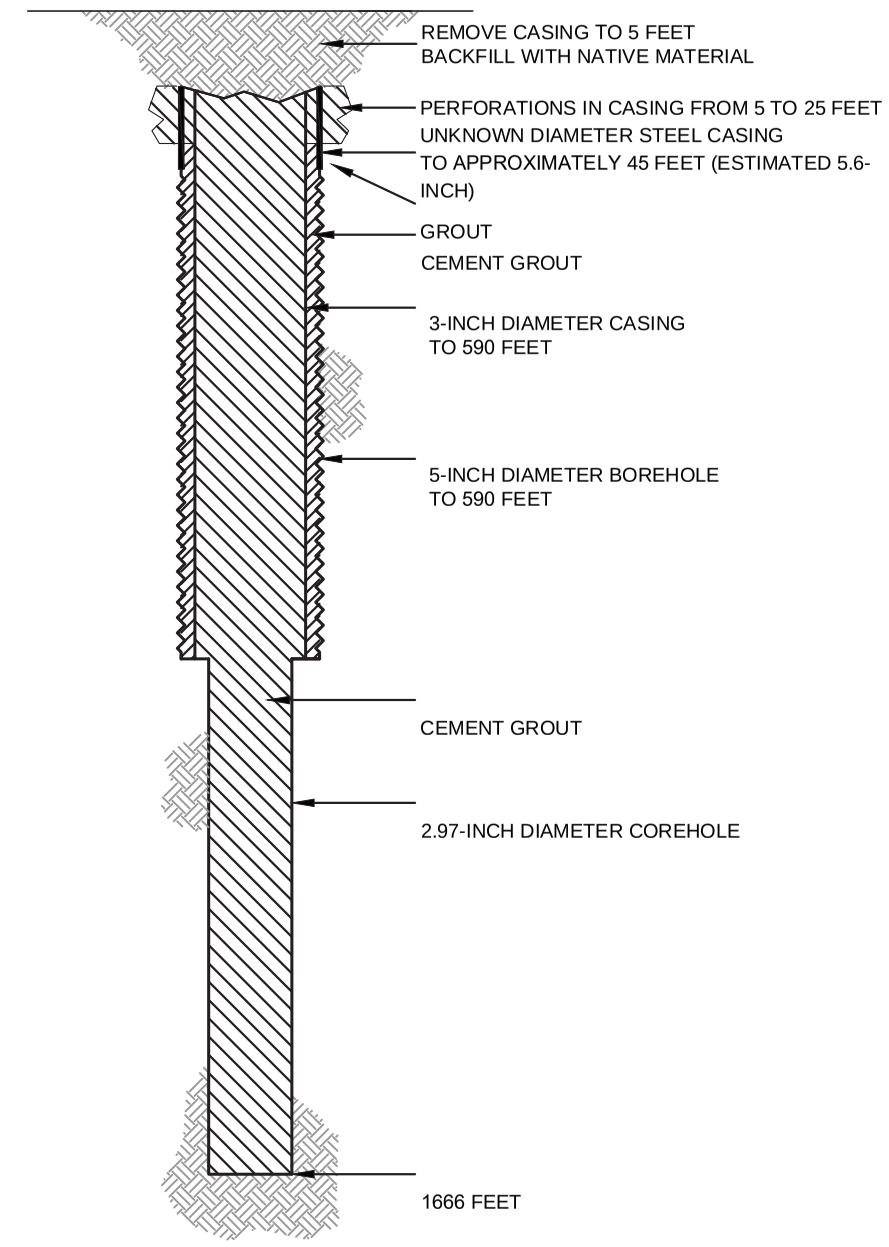

HALEY ALDRICH

FLORENCE COPPER, INC.
FLORENCE, ARIZONA

COREHOLE 128MF DIAGRAM

FLORENCE COPPER INC.

NOT TO SCALE
SEPTEMBER 2019

FIGURE 1

MOBINI, GITA Printed: 4/21/2017 12:00 PM Layout: ABANDON (2)
G:\PROJECTS\CURIS RESOURCES\38706-CURIS FEASIBILITY\DRAWINGS\EPA\WELL ABANDON\415S_ABANDON.DWG

OMB No. 2040-0042 Approval Expires 4/30/2022

United States Environmental Protection Agency

WELL REWORK RECORD, PLUGGING AND ABANDONMENT PLAN, OR PLUGGING AND ABANDONMENT AFFIDAVIT

Name and Address, Phone Number and/or Email of Permittee

Florence Copper Project
1575 W Hunt Hwy,
Florence, AZ 85132

Permit or EPA ID Number	API Number	Full Well Name
R9UIC-AZ3-FY11-1		129S

State	County
Arizona	Pinal

Locate well in two directions from nearest lines of quarter section and drilling unit

Latitude 33.05092966

Surface Location

NE **1/4 of** SW **1/4 of Section** 28 **Township** 4S **Range** 9E

Longitude -111.4312978

_____ **ft. from (N/S)** _____ **Line of quarter section**

_____ **ft. from (E/W)** _____ **Line of quarter section.**

Well Class	Timing of Action (pick one)	Type of Action (pick one)
☐ Class I ☐ Class II ☑ Class III ☐ Class V	☑ Notice Prior to Work Date Expected to Commence March 2021 ☐ Report After Work Date Work Ended	☐ Well Rework ☑ Plugging and Abandonment ☐ Conversion to a Non-Injection Well

Provide a narrative description of the work planned to be performed, or that was performed. Use additional pages as necessary. See instructions.

A workover rig capable of performing the required abandonment operations at the required depths will be moved in and set up over the core hole. The core hole will be inspected to determine the depth to which the hole remains open and if any obstructions are present in the core hole; the presence and condition of any existing collar will also be documented. If necessary, the core hole will be cleaned out to a depth of at least 100 feet below the bedrock-LBFU contact to enable placement of cement seals.

If collar is present, an attempt will be made to remove it. If removal of the collar is not feasible, it will be left in the hole and perforated as needed to allow an annular seal to be placed to a depth of at least 25 feet bgs. In areas of agricultural use, the surface casing will be cut at least 5 feet bgs and removed.

If the collar cannot be removed, it will be perforated from at least 20 feet below the bedrock-LBFU contact to at least 20 feet above the contact; from at least 20 feet below the base of the MFGU to at least 20 feet above the top of the MFGU; and from at least 25 feet bgs to 5 feet bgs.

A tremie pipe will be used to place Type V cement in the open core hole from the bottom of the core hole to the top of the core hole. Cement retainers, as described above, will be used to force cement grout into the annulus and behind perforated intervals, as necessary.

If the hole has been obstructed, as much cement as possible will be placed from 100 feet below the LBFU-bedrock contact to the top of the core hole.

The volume of Type V cement will be recorded and will not be less than the estimated volume of material required to fill each interval. All cement grout will consist of Type V cement, or equivalent approved in accordance with the UIC Permit.

Certification

I certify under the penalty of law that I have personally examined and am familiar with the information submitted in this document and all attachments and that, based on my inquiry of those individuals immediately responsible for obtaining the information, I believe that the information is true, accurate, and complete. I am aware that there are significant penalties for submitting false information, including the possibliity of fine and imprisonment. (Ref. 40 CFR § 144.32)

Name and Official Title *(Please type or print)*	Signature	Date Signed
Dan Johnson, VP - General Manager		10/3/2019

INSTRUCTIONS FOR FORM 7520-19

This form replaces forms 7520-12 and 7520-14. Use this form only when work is planned or has occurred that affects the well's construction or operation as an injection well, including work on the casing, tubing or packer (or for shallow Class V wells, the subsurface fluid emplacement network). Use one form per injection well. While reports or other information developed by contractors or service companies may be attached, this form must be signed by a responsible entity as described at 40 CFR 144.32. Note: operators closing Class V wells should use Form 7520-17.

NAME, ADDRESS, PHONE AND/OR EMAIL OF PERMITTEE: Enter the name and street address, city/town, state, and ZIP code of the permittee. Also provide an email address (if available) and/or a phone number.

PERMIT OR EPA ID NUMBER: Enter the well identification number or permit number assigned to the well by the EPA or the permitting authority.

API NUMBER: Enter the number assigned by the local jurisdiction (usually a State Oil and Gas Agency) using the American Petroleum Institute standard numbering system.

FULL WELL NAME: Enter the full name of the well or project.

Enter the **STATE** and **COUNTY** where the well is located. For States that do not have counties, use the name of that State's equivalent jurisdiction at a more local level.

WELL LOCATION: Fill in the complete township, range, and section to the nearest quarter-quarter section. A township is north or south of the baseline, and a range is east or west of the principal meridian (e.g., T12N, R34W). Also include the distance, in feet, from the nearest north or south line and nearest east or west line of the quarter-section. Also, enter the **latitude** and **longitude** of the well in decimal degrees, to five or six places if possible; be sure to include a negative sign for the longitude of a well in the Western Hemisphere and a negative sign for the latitude of a well in the Southern Hemisphere.

Enter the **WELL CLASS,** i.e., the class of injection well as defined in 40 CFR 144.6.

TIMING OF THE ACTION: Check ***Notice prior to work*** if the activity has not yet occurred (i.e., is planned). Check ***Report after work*** if the activity described has already occurred. As appropriate, include the date the activity is expected to start or the date the activity was completed. (Note this may not be available, e.g., for a plugging plan submitted with a permit application.)

TYPE OF ACTION: Check the appropriate box to describe the kind of activity being reported. Check ***Well Rework*** for work that was/will be performed on the well after it has already been in operation as an injection well. Check ***Plugging and Abandonment*** to report on plans for or descriptions of final closure/plugging after use as an injection well. Check ***Conversion to a Non-Injection Well*** if the well is to be converted to something other than an injection well.

Provide a **NARRATIVE DESCRIPTION** of the work planned to be performed, or that was performed. The narrative should include a description of the main procedures planned or that occurred during the work activity. A service company report, daily report, or similar document may be attached if it includes all the requested information and is clear and legible.

For well reworks, include the following information: The reason for the well rework; depths of activity; type of activity; changes to injection well configuration, well casing, or cement behind casing; any plug added to the well and its depth; any newly drilled interval and its depth; method(s) to demonstrate that the well has mechanical integrity (as applicable); and any deviations from the approved rework plan (as applicable).

For a well plugging plan, include the following information: Reason for the well plugging; number of plugs placed, and their depths; materials used as plugs (e.g., cast iron bridge plug, cement, cement retainer); method to set plugs; and wait-on-cement times, if any. Also provide one or more cost estimates from an independent firm in the business of plugging and abandoning wells to plug the well as described in the plan.

For well plugging affidavit, include the following information: Reason for the well plugging; number of plugs placed, and their depths; materials used as plugs (e.g., cast iron bridge plug, cement, cement retainer); method to set plugs; wait-on-cement times, if any; and any deviations from the approved plugging plan (if applicable).

For conversion to a non-injection well, include the following information: Depths of activity; type of activity; changes to injection well configuration, well casing, or cement behind casing; any plug added to the well and its depth; any newly drilled interval and its depth; depths of new perforations; and method(s) to demonstrate that the well has mechanical integrity (as applicable).

For all of the above activities, include a well sketch depicting the work, results of well tests/logging performed, service company tickets, and any other available information demonstrating how the work was/is to be performed. Also, specify whether depths are below ground surface, relative to Kelly bushing, etc.

CERTIFICATION: This form must be signed and dated by either: a responsible corporate officer for a corporation, by a general partner for a partnership, by the proprietor of a sole proprietorship, or by a principal executive or ranking elected official for a public agency.

PAPERWORK REDUCTION ACT NOTICE: The public reporting and recordkeeping burden for this collection of information is estimated to average between 6.0 and 7.9 hours per response, depending on the injection well class. Burden means the total time, effort, or financial resource expended by persons to generate, maintain, retain, or disclose or provide information to or for a Federal Agency. This includes the time needed to review instructions; develop, acquire, install, and utilize technology and systems for the purposes of collecting, validating, and verifying information, processing and maintaining information, and disclosing and providing information; adjust the existing ways to comply with any previously applicable instructions and requirements; train personnel to be able to respond to the collection of information; search data sources; complete and review the collection of information; and, transmit or otherwise disclose the information. An agency may not conduct or sponsor, and a person is not required to respond to, a collection of information unless it displays a currently valid OMB control number. Send comments on the Agency's need for this information, the accuracy of the provided burden estimates, and any suggested methods for minimizing respondent burden, including the use of automated collection techniques to Director, Collection Strategies Division, U.S. Environmental Protection Agency (2822), 1200 Pennsylvania Ave., NW., Washington, D.C. 20460. Include the OMB control number in any correspondence. Do not send the completed forms to this address.

AS-BUILT COREHOLE 129S

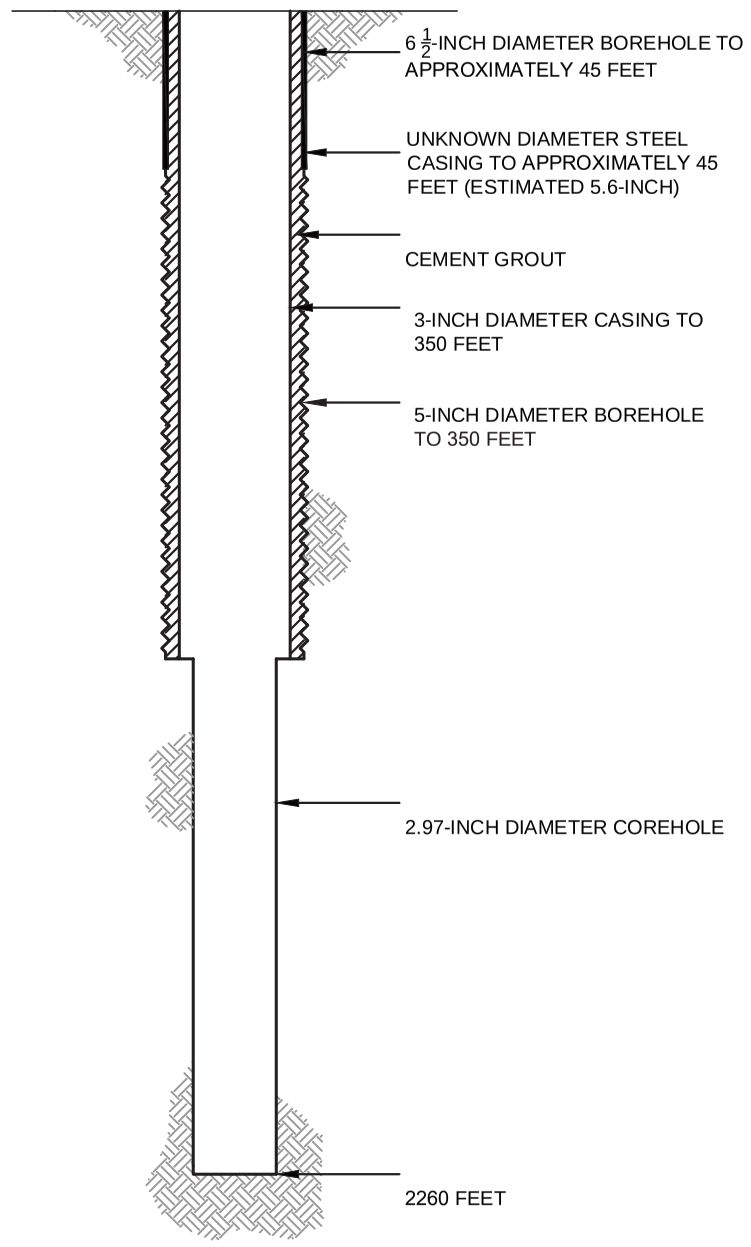

PROPOSED PLUGGING AND ABANDONMENT COREHOLE 129S

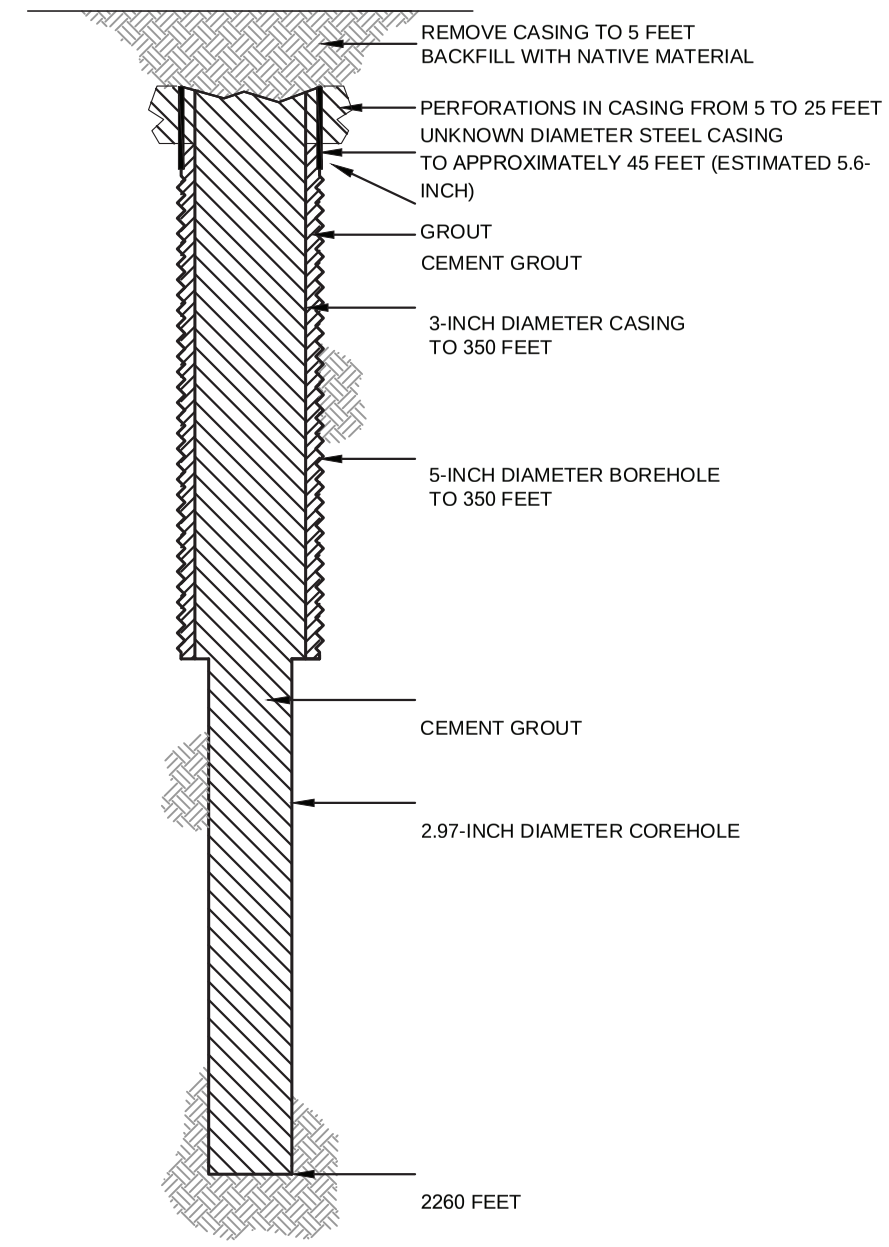

HALEY ALDRICH

FLORENCE COPPER, INC.
FLORENCE, ARIZONA

COREHOLE 129S DIAGRAM

FLORENCE COPPER INC.

NOT TO SCALE
SEPTEMBER 2019

FIGURE 1

MOBINI, GITA Printed: 4/21/2017 12:00 PM Layout: ABANDON (2)
G:\PROJECTS\CURIS RESOURCES\38706-CURIS FEASIBILITY\DRAWINGS\EPA\WELL ABANDON\415S_ABANDON.DWG

OMB No. 2040-0042 Approval Expires 4/30/2022

United States Environmental Protection Agency

WELL REWORK RECORD, PLUGGING AND ABANDONMENT PLAN, OR PLUGGING AND ABANDONMENT AFFIDAVIT

Name and Address, Phone Number and/or Email of Permittee

Florence Copper Project
1575 W Hunt Hwy,
Florence, AZ 85132

Permit or EPA ID Number	API Number	Full Well Name
R9UIC-AZ3-FY11-1		131MF

State	County
Arizona	Pinal

Locate well in two directions from nearest lines of quarter section and drilling unit

Surface Location

SE 1/4 of SE 1/4 of Section 28 Township 4S Range 9E

Latitude 33.04852106

Longitude -111.4232436

ft. from (N/S) Line of quarter section

ft. from (E/W) Line of quarter section.

Well Class	Timing of Action (pick one)	Type of Action (pick one)
☐ Class I ☐ Class II ☑ Class III ☐ Class V	☑ Notice Prior to Work Date Expected to Commence March 2021 ☐ Report After Work Date Work Ended	☐ Well Rework ☑ Plugging and Abandonment ☐ Conversion to a Non-Injection Well

Provide a narrative description of the work planned to be performed, or that was performed. Use additional pages as necessary. See instructions.

A workover rig capable of performing the required abandonment operations at the required depths will be moved in and set up over the core hole. The core hole will be inspected to determine the depth to which the hole remains open and if any obstructions are present in the core hole; the presence and condition of any existing collar will also be documented. If necessary, the core hole will be cleaned out to a depth of at least 100 feet below the bedrock-LBFU contact to enable placement of cement seals.

If collar is present, an attempt will be made to remove it. If removal of the collar is not feasible, it will be left in the hole and perforated as needed to allow an annular seal to be placed to a depth of at least 25 feet bgs. In areas of agricultural use, the surface casing will be cut at least 5 feet bgs and removed.

If the collar cannot be removed, it will be perforated from at least 20 feet below the bedrock-LBFU contact to at least 20 feet above the contact; from at least 20 feet below the base of the MFGU to at least 20 feet above the top of the MFGU; and from at least 25 feet bgs to 5 feet bgs.

A tremie pipe will be used to place Type V cement in the open core hole from the bottom of the core hole to the top of the core hole. Cement retainers, as described above, will be used to force cement grout into the annulus and behind perforated intervals, as necessary.

If the hole has been obstructed, as much cement as possible will be placed from 100 feet below the LBFU-bedrock contact to the top of the core hole.

The volume of Type V cement will be recorded and will not be less than the estimated volume of material required to fill each interval. All cement grout will consist of Type V cement, or equivalent approved in accordance with the UIC Permit.

Certification

I certify under the penalty of law that I have personally examined and am familiar with the information submitted in this document and all attachments and that, based on my inquiry of those individuals immediately responsible for obtaining the information, I believe that the information is true, accurate, and complete. I am aware that there are significant penalties for submitting false information, including the possibliity of fine and imprisonment. (Ref. 40 CFR § 144.32)

Name and Official Title *(Please type or print)*	Signature	Date Signed
Dan Johnson, VP - General Manager		10/3/2019

INSTRUCTIONS FOR FORM 7520-19

This form replaces forms 7520-12 and 7520-14. Use this form only when work is planned or has occurred that affects the well's construction or operation as an injection well, including work on the casing, tubing or packer (or for shallow Class V wells, the subsurface fluid emplacement network). Use one form per injection well. While reports or other information developed by contractors or service companies may be attached, this form must be signed by a responsible entity as described at 40 CFR 144.32. Note: operators closing Class V wells should use Form 7520-17.

NAME, ADDRESS, PHONE AND/OR EMAIL OF PERMITTEE: Enter the name and street address, city/town, state, and ZIP code of the permittee. Also provide an email address (if available) and/or a phone number.

PERMIT OR EPA ID NUMBER: Enter the well identification number or permit number assigned to the well by the EPA or the permitting authority.

API NUMBER: Enter the number assigned by the local jurisdiction (usually a State Oil and Gas Agency) using the American Petroleum Institute standard numbering system.

FULL WELL NAME: Enter the full name of the well or project.

Enter the **STATE** and **COUNTY** where the well is located. For States that do not have counties, use the name of that State's equivalent jurisdiction at a more local level.

WELL LOCATION: Fill in the complete township, range, and section to the nearest quarter-quarter section. A township is north or south of the baseline, and a range is east or west of the principal meridian (e.g., T12N, R34W). Also include the distance, in feet, from the nearest north or south line and nearest east or west line of the quarter-section. Also, enter the **latitude** and **longitude** of the well in decimal degrees, to five or six places if possible; be sure to include a negative sign for the longitude of a well in the Western Hemisphere and a negative sign for the latitude of a well in the Southern Hemisphere.

Enter the **WELL CLASS,** i.e., the class of injection well as defined in 40 CFR 144.6.

TIMING OF THE ACTION: Check ***Notice prior to work*** if the activity has not yet occurred (i.e., is planned). Check ***Report after work*** if the activity described has already occurred. As appropriate, include the date the activity is expected to start or the date the activity was completed. (Note this may not be available, e.g., for a plugging plan submitted with a permit application.)

TYPE OF ACTION: Check the appropriate box to describe the kind of activity being reported. Check ***Well Rework*** for work that was/will be performed on the well after it has already been in operation as an injection well. Check ***Plugging and Abandonment*** to report on plans for or descriptions of final closure/plugging after use as an injection well. Check ***Conversion to a Non-Injection Well*** if the well is to be converted to something other than an injection well.

Provide a **NARRATIVE DESCRIPTION** of the work planned to be performed, or that was performed. The narrative should include a description of the main procedures planned or that occurred during the work activity. A service company report, daily report, or similar document may be attached if it includes all the requested information and is clear and legible.

For well reworks, include the following information: The reason for the well rework; depths of activity; type of activity; changes to injection well configuration, well casing, or cement behind casing; any plug added to the well and its depth; any newly drilled interval and its depth; method(s) to demonstrate that the well has mechanical integrity (as applicable); and any deviations from the approved rework plan (as applicable).

For a well plugging plan, include the following information: Reason for the well plugging; number of plugs placed, and their depths; materials used as plugs (e.g., cast iron bridge plug, cement, cement retainer); method to set plugs; and wait-on-cement times, if any. Also provide one or more cost estimates from an independent firm in the business of plugging and abandoning wells to plug the well as described in the plan.

For well plugging affidavit, include the following information: Reason for the well plugging; number of plugs placed, and their depths; materials used as plugs (e.g., cast iron bridge plug, cement, cement retainer); method to set plugs; wait-on-cement times, if any; and any deviations from the approved plugging plan (if applicable).

For conversion to a non-injection well, include the following information: Depths of activity; type of activity; changes to injection well configuration, well casing, or cement behind casing; any plug added to the well and its depth; any newly drilled interval and its depth; depths of new perforations; and method(s) to demonstrate that the well has mechanical integrity (as applicable).

For all of the above activities, include a well sketch depicting the work, results of well tests/logging performed, service company tickets, and any other available information demonstrating how the work was/is to be performed. Also, specify whether depths are below ground surface, relative to Kelly bushing, etc.

CERTIFICATION: This form must be signed and dated by either: a responsible corporate officer for a corporation, by a general partner for a partnership, by the proprietor of a sole proprietorship, or by a principal executive or ranking elected official for a public agency.

PAPERWORK REDUCTION ACT NOTICE: The public reporting and recordkeeping burden for this collection of information is estimated to average between 6.0 and 7.9 hours per response, depending on the injection well class. Burden means the total time, effort, or financial resource expended by persons to generate, maintain, retain, or disclose or provide information to or for a Federal Agency. This includes the time needed to review instructions; develop, acquire, install, and utilize technology and systems for the purposes of collecting, validating, and verifying information, processing and maintaining information, and disclosing and providing information; adjust the existing ways to comply with any previously applicable instructions and requirements; train personnel to be able to respond to the collection of information; search data sources; complete and review the collection of information; and, transmit or otherwise disclose the information. An agency may not conduct or sponsor, and a person is not required to respond to, a collection of information unless it displays a currently valid OMB control number. Send comments on the Agency's need for this information, the accuracy of the provided burden estimates, and any suggested methods for minimizing respondent burden, including the use of automated collection techniques to Director, Collection Strategies Division, U.S. Environmental Protection Agency (2822), 1200 Pennsylvania Ave., NW., Washington, D.C. 20460. Include the OMB control number in any correspondence. Do not send the completed forms to this address.

AS-BUILT COREHOLE 131MF

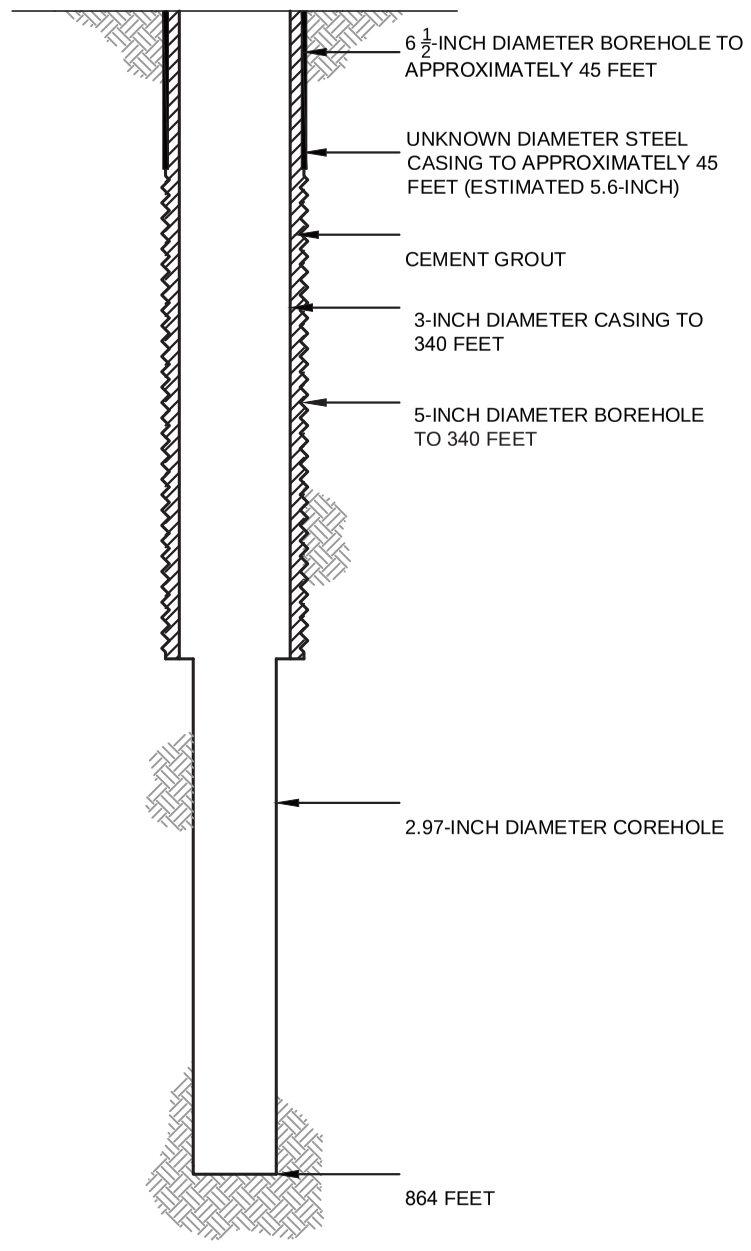

PROPOSED PLUGGING AND ABANDONMENT COREHOLE 131MF

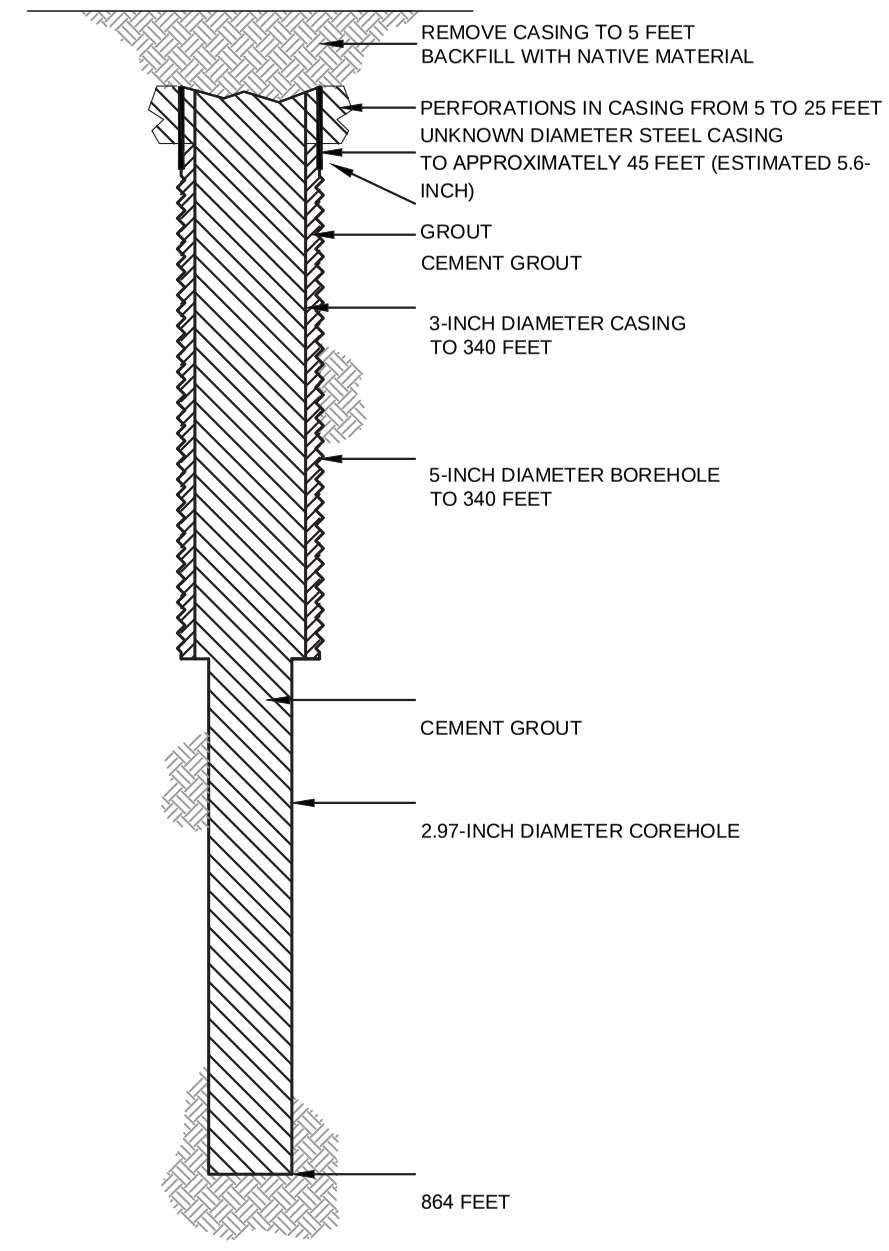

HALEY ALDRICH

FLORENCE COPPER, INC.
FLORENCE, ARIZONA

COREHOLE 131MF DIAGRAM

FLORENCE COPPER INC.

NOT TO SCALE
SEPTEMBER 2019

FIGURE 1

MOBINI, GITA Printed: 4/21/2017 12:00 PM Layout: ABANDON (2)
G:\PROJECTS\CURIS RESOURCES\38706-CURIS FEASIBILITY\DRAWINGS\EPA\WELL ABANDON\415S_ABANDON.DWG

OMB No. 2040-0042 Approval Expires 4/30/2022

United States Environmental Protection Agency

WELL REWORK RECORD, PLUGGING AND ABANDONMENT PLAN, OR PLUGGING AND ABANDONMENT AFFIDAVIT

Name and Address, Phone Number and/or Email of Permittee

Florence Copper Project
1575 W Hunt Hwy,
Florence, AZ 85132

Permit or EPA ID Number	API Number	Full Well Name
R9UIC-AZ3-FY11-1		132MF

State	County
Arizona	Pinal

Locate well in two directions from nearest lines of quarter section and drilling unit

Latitude 33.04736209

Longitude -111.4289363

Surface Location

SW **1/4 of** SE **1/4 of Section** 28 **Township** 4S **Range** 9E

_____ **ft. from (N/S)** _____ **Line of quarter section**

_____ **ft. from (E/W)** _____ **Line of quarter section.**

Well Class	Timing of Action (pick one)	Type of Action (pick one)
☐ Class I ☐ Class II ☑ Class III ☐ Class V	☑ Notice Prior to Work Date Expected to Commence March 2021 ☐ Report After Work Date Work Ended	☐ Well Rework ☑ Plugging and Abandonment ☐ Conversion to a Non-Injection Well

Provide a narrative description of the work planned to be performed, or that was performed. Use additional pages as necessary. See instructions.

A workover rig capable of performing the required abandonment operations at the required depths will be moved in and set up over the core hole. The core hole will be inspected to determine the depth to which the hole remains open and if any obstructions are present in the core hole; the presence and condition of any existing collar will also be documented. If necessary, the core hole will be cleaned out to a depth of at least 100 feet below the bedrock-LBFU contact to enable placement of cement seals.

If collar is present, an attempt will be made to remove it. If removal of the collar is not feasible, it will be left in the hole and perforated as needed to allow an annular seal to be placed to a depth of at least 25 feet bgs. In areas of agricultural use, the surface casing will be cut at least 5 feet bgs and removed.

If the collar cannot be removed, it will be perforated from at least 20 feet below the bedrock-LBFU contact to at least 20 feet above the contact; from at least 20 feet below the base of the MFGU to at least 20 feet above the top of the MFGU; and from at least 25 feet bgs to 5 feet bgs.

A tremie pipe will be used to place Type V cement in the open core hole from the bottom of the core hole to the top of the core hole. Cement retainers, as described above, will be used to force cement grout into the annulus and behind perforated intervals, as necessary.

If the hole has been obstructed, as much cement as possible will be placed from 100 feet below the LBFU-bedrock contact to the top of the core hole.

The volume of Type V cement will be recorded and will not be less than the estimated volume of material required to fill each interval. All cement grout will consist of Type V cement, or equivalent approved in accordance with the UIC Permit.

Certification

I certify under the penalty of law that I have personally examined and am familiar with the information submitted in this document and all attachments and that, based on my inquiry of those individuals immediately responsible for obtaining the information, I believe that the information is true, accurate, and complete. I am aware that there are significant penalties for submitting false information, including the possibliity of fine and imprisonment. (Ref. 40 CFR § 144.32)

Name and Official Title *(Please type or print)*	Signature	Date Signed
Dan Johnson, VP - General Manager		10/3/2019

INSTRUCTIONS FOR FORM 7520-19

This form replaces forms 7520-12 and 7520-14. Use this form only when work is planned or has occurred that affects the well's construction or operation as an injection well, including work on the casing, tubing or packer (or for shallow Class V wells, the subsurface fluid emplacement network). Use one form per injection well. While reports or other information developed by contractors or service companies may be attached, this form must be signed by a responsible entity as described at 40 CFR 144.32. Note: operators closing Class V wells should use Form 7520-17.

NAME, ADDRESS, PHONE AND/OR EMAIL OF PERMITTEE: Enter the name and street address, city/town, state, and ZIP code of the permittee. Also provide an email address (if available) and/or a phone number.

PERMIT OR EPA ID NUMBER: Enter the well identification number or permit number assigned to the well by the EPA or the permitting authority.

API NUMBER: Enter the number assigned by the local jurisdiction (usually a State Oil and Gas Agency) using the American Petroleum Institute standard numbering system.

FULL WELL NAME: Enter the full name of the well or project.

Enter the **STATE** and **COUNTY** where the well is located. For States that do not have counties, use the name of that State's equivalent jurisdiction at a more local level.

WELL LOCATION: Fill in the complete township, range, and section to the nearest quarter-quarter section. A township is north or south of the baseline, and a range is east or west of the principal meridian (e.g., T12N, R34W). Also include the distance, in feet, from the nearest north or south line and nearest east or west line of the quarter-section. Also, enter the **latitude** and **longitude** of the well in decimal degrees, to five or six places if possible; be sure to include a negative sign for the longitude of a well in the Western Hemisphere and a negative sign for the latitude of a well in the Southern Hemisphere.

Enter the **WELL CLASS,** i.e., the class of injection well as defined in 40 CFR 144.6.

TIMING OF THE ACTION: Check ***Notice prior to work*** if the activity has not yet occurred (i.e., is planned). Check ***Report after work*** if the activity described has already occurred. As appropriate, include the date the activity is expected to start or the date the activity was completed. (Note this may not be available, e.g., for a plugging plan submitted with a permit application.)

TYPE OF ACTION: Check the appropriate box to describe the kind of activity being reported. Check ***Well Rework*** for work that was/will be performed on the well after it has already been in operation as an injection well. Check ***Plugging and Abandonment*** to report on plans for or descriptions of final closure/plugging after use as an injection well. Check ***Conversion to a Non-Injection Well*** if the well is to be converted to something other than an injection well.

Provide a **NARRATIVE DESCRIPTION** of the work planned to be performed, or that was performed. The narrative should include a description of the main procedures planned or that occurred during the work activity. A service company report, daily report, or similar document may be attached if it includes all the requested information and is clear and legible.

For well reworks, include the following information: The reason for the well rework; depths of activity; type of activity; changes to injection well configuration, well casing, or cement behind casing; any plug added to the well and its depth; any newly drilled interval and its depth; method(s) to demonstrate that the well has mechanical integrity (as applicable); and any deviations from the approved rework plan (as applicable).

For a well plugging plan, include the following information: Reason for the well plugging; number of plugs placed, and their depths; materials used as plugs (e.g., cast iron bridge plug, cement, cement retainer); method to set plugs; and wait-on-cement times, if any. Also provide one or more cost estimates from an independent firm in the business of plugging and abandoning wells to plug the well as described in the plan.

For well plugging affidavit, include the following information: Reason for the well plugging; number of plugs placed, and their depths; materials used as plugs (e.g., cast iron bridge plug, cement, cement retainer); method to set plugs; wait-on-cement times, if any; and any deviations from the approved plugging plan (if applicable).

For conversion to a non-injection well, include the following information: Depths of activity; type of activity; changes to injection well configuration, well casing, or cement behind casing; any plug added to the well and its depth; any newly drilled interval and its depth; depths of new perforations; and method(s) to demonstrate that the well has mechanical integrity (as applicable).

For all of the above activities, include a well sketch depicting the work, results of well tests/logging performed, service company tickets, and any other available information demonstrating how the work was/is to be performed. Also, specify whether depths are below ground surface, relative to Kelly bushing, etc.

CERTIFICATION: This form must be signed and dated by either: a responsible corporate officer for a corporation, by a general partner for a partnership, by the proprietor of a sole proprietorship, or by a principal executive or ranking elected official for a public agency.

PAPERWORK REDUCTION ACT NOTICE: The public reporting and recordkeeping burden for this collection of information is estimated to average between 6.0 and 7.9 hours per response, depending on the injection well class. Burden means the total time, effort, or financial resource expended by persons to generate, maintain, retain, or disclose or provide information to or for a Federal Agency. This includes the time needed to review instructions; develop, acquire, install, and utilize technology and systems for the purposes of collecting, validating, and verifying information, processing and maintaining information, and disclosing and providing information; adjust the existing ways to comply with any previously applicable instructions and requirements; train personnel to be able to respond to the collection of information; search data sources; complete and review the collection of information; and, transmit or otherwise disclose the information. An agency may not conduct or sponsor, and a person is not required to respond to, a collection of information unless it displays a currently valid OMB control number. Send comments on the Agency's need for this information, the accuracy of the provided burden estimates, and any suggested methods for minimizing respondent burden, including the use of automated collection techniques to Director, Collection Strategies Division, U.S. Environmental Protection Agency (2822), 1200 Pennsylvania Ave., NW., Washington, D.C. 20460. Include the OMB control number in any correspondence. Do not send the completed forms to this address.

AS-BUILT COREHOLE 132MF

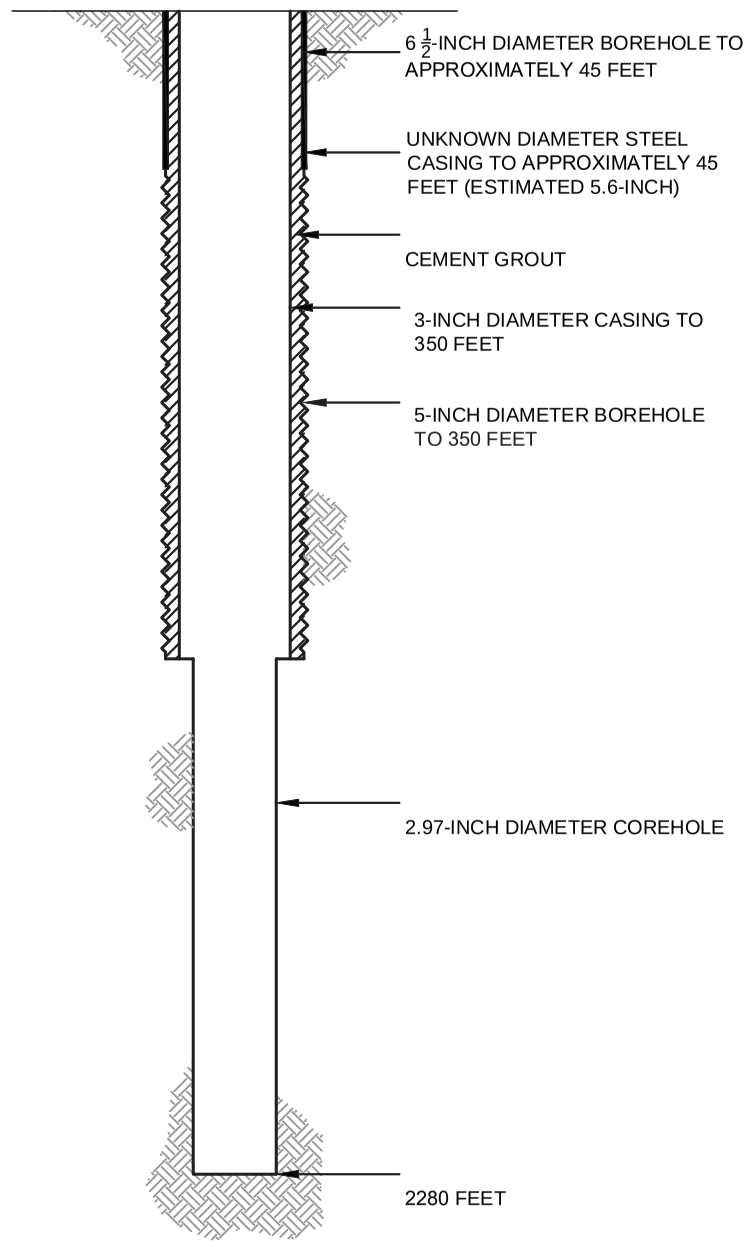

PROPOSED PLUGGING AND ABANDONMENT COREHOLE 132MF

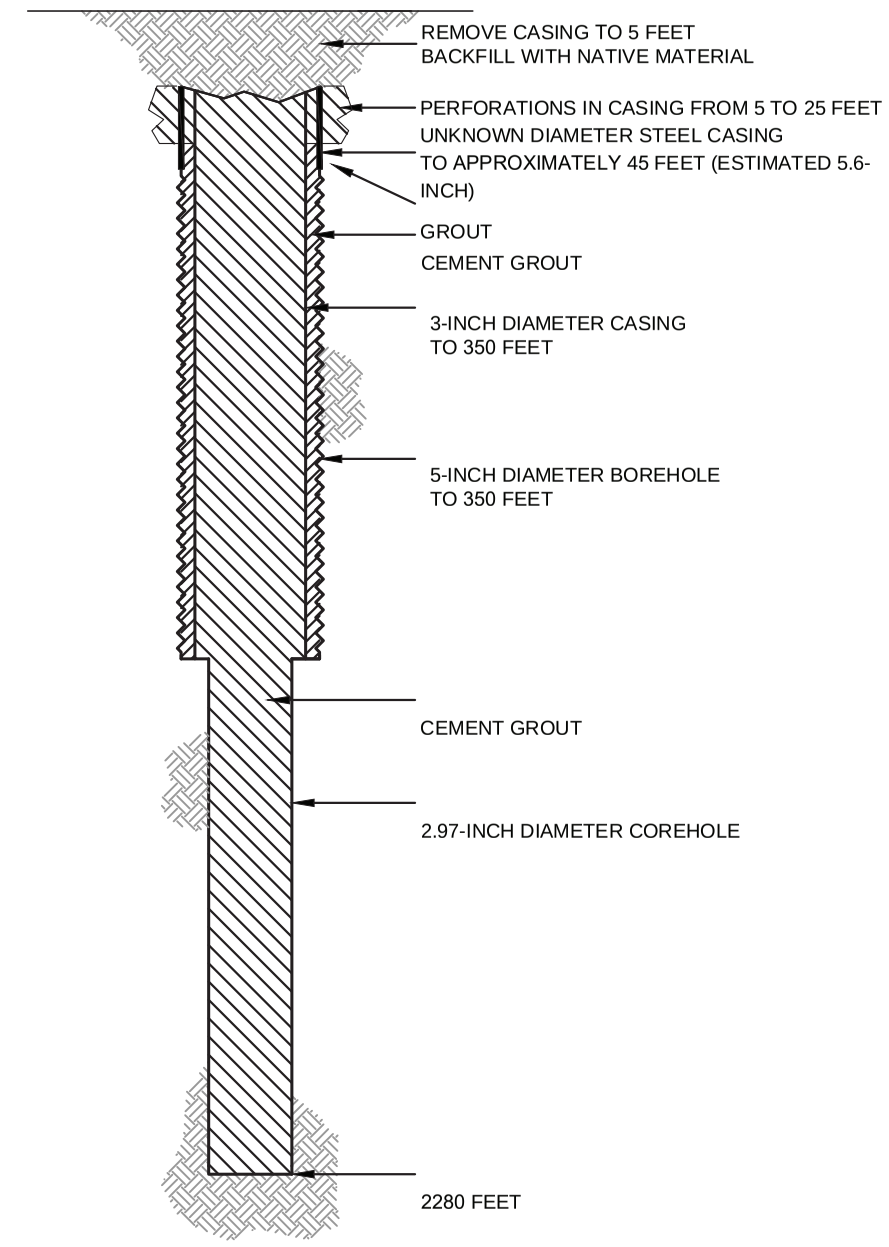

HALEY ALDRICH

FLORENCE COPPER, INC.
FLORENCE, ARIZONA

COREHOLE 132MF DIAGRAM

FLORENCE COPPER INC.

NOT TO SCALE
SEPTEMBER 2019

FIGURE 1

MOBINI, GITA Printed: 4/21/2017 12:00 PM Layout: ABANDON (2)
G:\PROJECTS\CURIS RESOURCES\38706-CURIS FEASIBILITY\DRAWINGS\EPA\WELL ABANDON\415S_ABANDON.DWG

OMB No. 2040-0042 Approval Expires 4/30/2022

United States Environmental Protection Agency

WELL REWORK RECORD, PLUGGING AND ABANDONMENT PLAN, OR PLUGGING AND ABANDONMENT AFFIDAVIT

Name and Address, Phone Number and/or Email of Permittee

Florence Copper Project
1575 W Hunt Hwy,
Florence, AZ 85132

Permit or EPA ID Number	API Number	Full Well Name
R9UIC-AZ3-FY11-1		136S

State	County
Arizona	Pinal

Locate well in two directions from nearest lines of quarter section and drilling unit

Latitude 33.05212428

Surface Location

NE **1/4 of** SW **1/4 of Section** 28 **Township** 4S **Range** 9E

Longitude -111.4321636

_____ **ft. from (N/S)** _____ **Line of quarter section**

_____ **ft. from (E/W)** _____ **Line of quarter section.**

Well Class	Timing of Action (pick one)	Type of Action (pick one)
☐ Class I ☐ Class II ☑ Class III ☐ Class V	☑ Notice Prior to Work Date Expected to Commence March 2021 ☐ Report After Work Date Work Ended	☐ Well Rework ☑ Plugging and Abandonment ☐ Conversion to a Non-Injection Well

Provide a narrative description of the work planned to be performed, or that was performed. Use additional pages as necessary. See instructions.

A workover rig capable of performing the required abandonment operations at the required depths will be moved in and set up over the core hole. The core hole will be inspected to determine the depth to which the hole remains open and if any obstructions are present in the core hole; the presence and condition of any existing collar will also be documented. If necessary, the core hole will be cleaned out to a depth of at least 100 feet below the bedrock-LBFU contact to enable placement of cement seals.

If collar is present, an attempt will be made to remove it. If removal of the collar is not feasible, it will be left in the hole and perforated as needed to allow an annular seal to be placed to a depth of at least 25 feet bgs. In areas of agricultural use, the surface casing will be cut at least 5 feet bgs and removed.

If the collar cannot be removed, it will be perforated from at least 20 feet below the bedrock-LBFU contact to at least 20 feet above the contact; from at least 20 feet below the base of the MFGU to at least 20 feet above the top of the MFGU; and from at least 25 feet bgs to 5 feet bgs.

A tremie pipe will be used to place Type V cement in the open core hole from the bottom of the core hole to the top of the core hole. Cement retainers, as described above, will be used to force cement grout into the annulus and behind perforated intervals, as necessary.

If the hole has been obstructed, as much cement as possible will be placed from 100 feet below the LBFU-bedrock contact to the top of the core hole.

The volume of Type V cement will be recorded and will not be less than the estimated volume of material required to fill each interval. All cement grout will consist of Type V cement, or equivalent approved in accordance with the UIC Permit.

Certification

I certify under the penalty of law that I have personally examined and am familiar with the information submitted in this document and all attachments and that, based on my inquiry of those individuals immediately responsible for obtaining the information, I believe that the information is true, accurate, and complete. I am aware that there are significant penalties for submitting false information, including the possibliity of fine and imprisonment. (Ref. 40 CFR § 144.32)

Name and Official Title *(Please type or print)*	Signature	Date Signed
Dan Johnson, VP - General Manager		10/3/2019

INSTRUCTIONS FOR FORM 7520-19

This form replaces forms 7520-12 and 7520-14. Use this form only when work is planned or has occurred that affects the well's construction or operation as an injection well, including work on the casing, tubing or packer (or for shallow Class V wells, the subsurface fluid emplacement network). Use one form per injection well. While reports or other information developed by contractors or service companies may be attached, this form must be signed by a responsible entity as described at 40 CFR 144.32. Note: operators closing Class V wells should use Form 7520-17.

NAME, ADDRESS, PHONE AND/OR EMAIL OF PERMITTEE: Enter the name and street address, city/town, state, and ZIP code of the permittee. Also provide an email address (if available) and/or a phone number.

PERMIT OR EPA ID NUMBER: Enter the well identification number or permit number assigned to the well by the EPA or the permitting authority.

API NUMBER: Enter the number assigned by the local jurisdiction (usually a State Oil and Gas Agency) using the American Petroleum Institute standard numbering system.

FULL WELL NAME: Enter the full name of the well or project.

Enter the **STATE** and **COUNTY** where the well is located. For States that do not have counties, use the name of that State's equivalent jurisdiction at a more local level.

WELL LOCATION: Fill in the complete township, range, and section to the nearest quarter-quarter section. A township is north or south of the baseline, and a range is east or west of the principal meridian (e.g., T12N, R34W). Also include the distance, in feet, from the nearest north or south line and nearest east or west line of the quarter-section. Also, enter the **latitude** and **longitude** of the well in decimal degrees, to five or six places if possible; be sure to include a negative sign for the longitude of a well in the Western Hemisphere and a negative sign for the latitude of a well in the Southern Hemisphere.

Enter the **WELL CLASS,** i.e., the class of injection well as defined in 40 CFR 144.6.

TIMING OF THE ACTION: Check ***Notice prior to work*** if the activity has not yet occurred (i.e., is planned). Check ***Report after work*** if the activity described has already occurred. As appropriate, include the date the activity is expected to start or the date the activity was completed. (Note this may not be available, e.g., for a plugging plan submitted with a permit application.)

TYPE OF ACTION: Check the appropriate box to describe the kind of activity being reported. Check ***Well Rework*** for work that was/will be performed on the well after it has already been in operation as an injection well. Check ***Plugging and Abandonment*** to report on plans for or descriptions of final closure/plugging after use as an injection well. Check ***Conversion to a Non-Injection Well*** if the well is to be converted to something other than an injection well.

Provide a **NARRATIVE DESCRIPTION** of the work planned to be performed, or that was performed. The narrative should include a description of the main procedures planned or that occurred during the work activity. A service company report, daily report, or similar document may be attached if it includes all the requested information and is clear and legible.

For well reworks, include the following information: The reason for the well rework; depths of activity; type of activity; changes to injection well configuration, well casing, or cement behind casing; any plug added to the well and its depth; any newly drilled interval and its depth; method(s) to demonstrate that the well has mechanical integrity (as applicable); and any deviations from the approved rework plan (as applicable).

For a well plugging plan, include the following information: Reason for the well plugging; number of plugs placed, and their depths; materials used as plugs (e.g., cast iron bridge plug, cement, cement retainer); method to set plugs; and wait-on-cement times, if any. Also provide one or more cost estimates from an independent firm in the business of plugging and abandoning wells to plug the well as described in the plan.

For well plugging affidavit, include the following information: Reason for the well plugging; number of plugs placed, and their depths; materials used as plugs (e.g., cast iron bridge plug, cement, cement retainer); method to set plugs; wait-on-cement times, if any; and any deviations from the approved plugging plan (if applicable).

For conversion to a non-injection well, include the following information: Depths of activity; type of activity; changes to injection well configuration, well casing, or cement behind casing; any plug added to the well and its depth; any newly drilled interval and its depth; depths of new perforations; and method(s) to demonstrate that the well has mechanical integrity (as applicable).

For all of the above activities, include a well sketch depicting the work, results of well tests/logging performed, service company tickets, and any other available information demonstrating how the work was/is to be performed. Also, specify whether depths are below ground surface, relative to Kelly bushing, etc.

CERTIFICATION: This form must be signed and dated by either: a responsible corporate officer for a corporation, by a general partner for a partnership, by the proprietor of a sole proprietorship, or by a principal executive or ranking elected official for a public agency.

PAPERWORK REDUCTION ACT NOTICE: The public reporting and recordkeeping burden for this collection of information is estimated to average between 6.0 and 7.9 hours per response, depending on the injection well class. Burden means the total time, effort, or financial resource expended by persons to generate, maintain, retain, or disclose or provide information to or for a Federal Agency. This includes the time needed to review instructions; develop, acquire, install, and utilize technology and systems for the purposes of collecting, validating, and verifying information, processing and maintaining information, and disclosing and providing information; adjust the existing ways to comply with any previously applicable instructions and requirements; train personnel to be able to respond to the collection of information; search data sources; complete and review the collection of information; and, transmit or otherwise disclose the information. An agency may not conduct or sponsor, and a person is not required to respond to, a collection of information unless it displays a currently valid OMB control number. Send comments on the Agency's need for this information, the accuracy of the provided burden estimates, and any suggested methods for minimizing respondent burden, including the use of automated collection techniques to Director, Collection Strategies Division, U.S. Environmental Protection Agency (2822), 1200 Pennsylvania Ave., NW., Washington, D.C. 20460. Include the OMB control number in any correspondence. Do not send the completed forms to this address.

AS-BUILT COREHOLE 136S

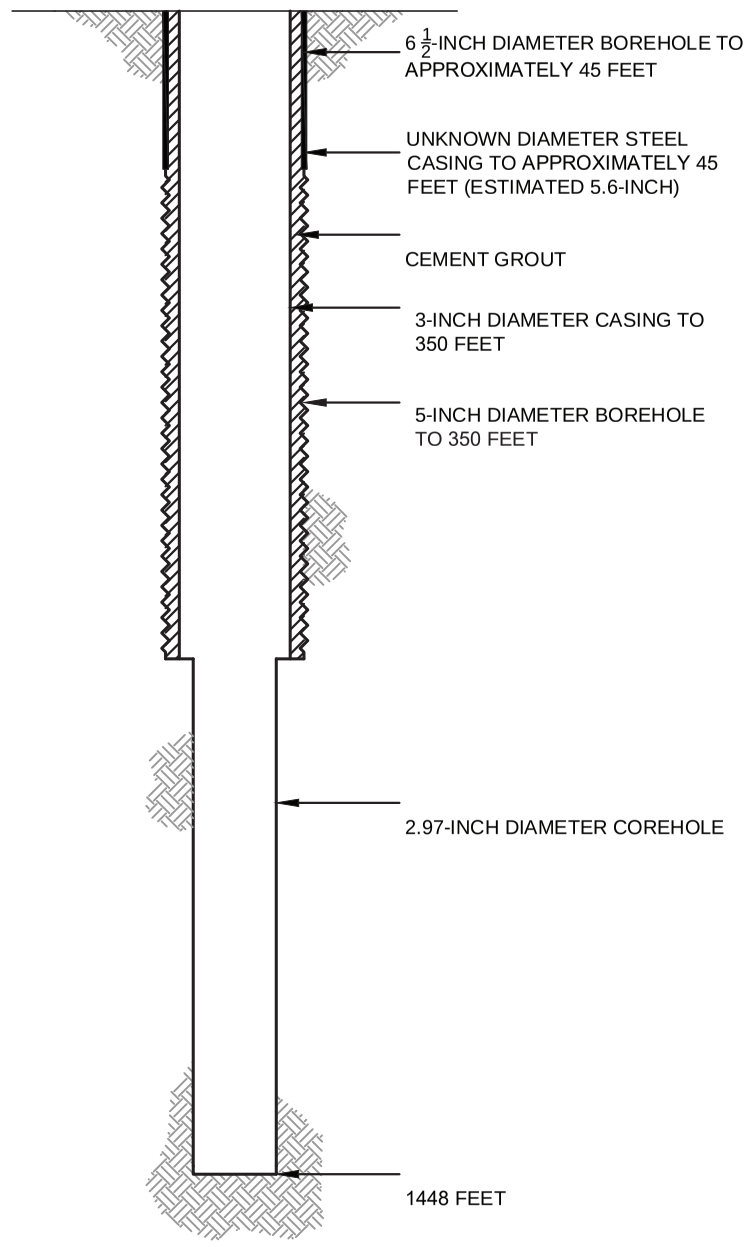

PROPOSED PLUGGING AND ABANDONMENT COREHOLE 136S

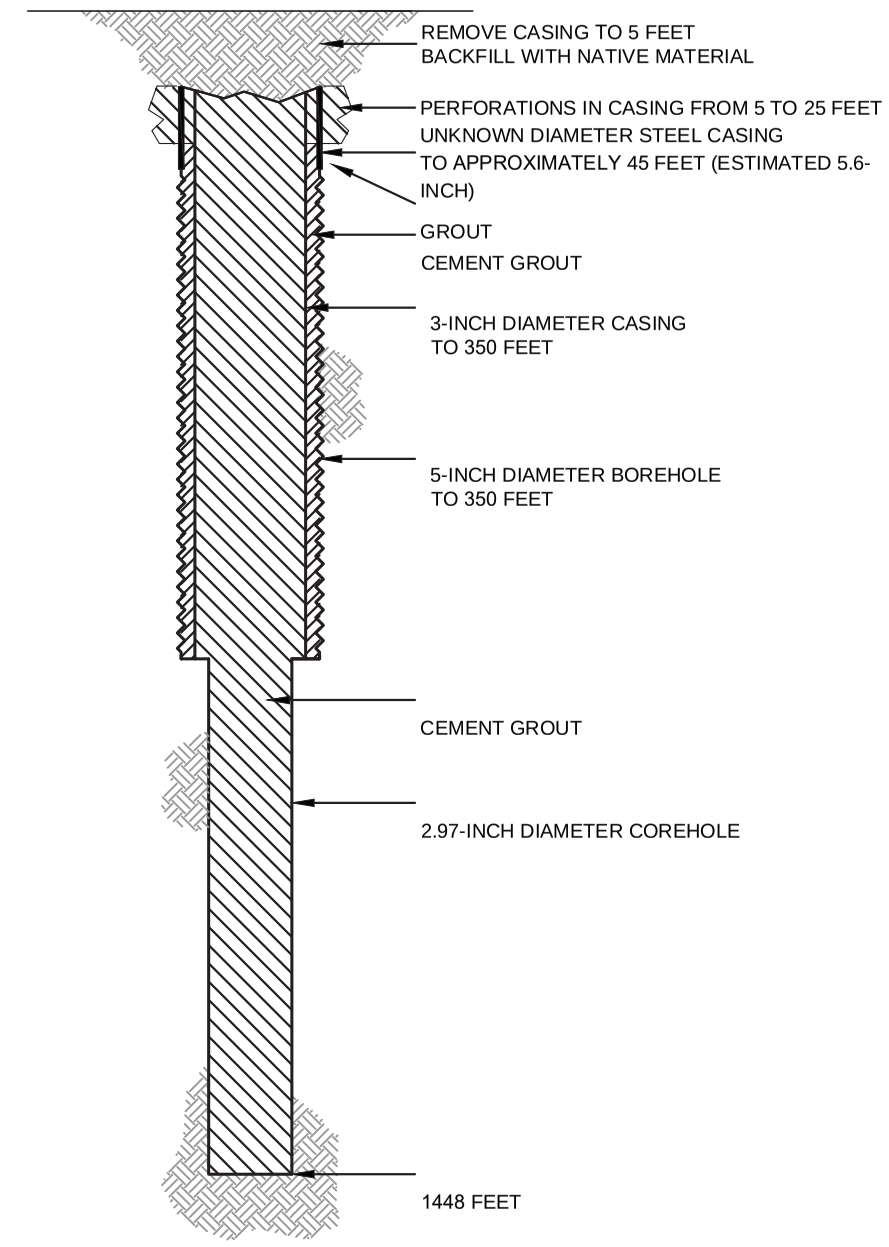

HALEY ALDRICH

FLORENCE COPPER, INC.
FLORENCE, ARIZONA

COREHOLE 136S DIAGRAM

FLORENCE COPPER INC.

NOT TO SCALE
SEPTEMBER 2019

FIGURE 1

MOBINI, GITA Printed: 4/21/2017 12:00 PM Layout: ABANDON (2)
G:\PROJECTS\CURIS RESOURCES\38706-CURIS FEASIBILITY\DRAWINGS\EPA\WELL ABANDON\415S_ABANDON.DWG

OMB No. 2040-0042 Approval Expires 4/30/2022

United States Environmental Protection Agency

WELL REWORK RECORD, PLUGGING AND ABANDONMENT PLAN, OR PLUGGING AND ABANDONMENT AFFIDAVIT

Name and Address, Phone Number and/or Email of Permittee

Florence Copper Project
1575 W Hunt Hwy,
Florence, AZ 85132

Permit or EPA ID Number	API Number	Full Well Name
R9UIC-AZ3-FY11-1		137

State	County
Arizona	Pinal

Locate well in two directions from nearest lines of quarter section and drilling unit

Latitude 33.05333565

Surface Location

SE **1/4 of** NW **1/4 of Section** 28 **Township** 4S **Range** 9E

Longitude -111.4338091

_____ **ft. from (N/S)** _____ **Line of quarter section**

_____ **ft. from (E/W)** _____ **Line of quarter section.**

Well Class	Timing of Action (pick one)	Type of Action (pick one)
☐ Class I ☐ Class II ☑ Class III ☐ Class V	☑ Notice Prior to Work Date Expected to Commence March 2021 ☐ Report After Work Date Work Ended	☐ Well Rework ☑ Plugging and Abandonment ☐ Conversion to a Non-Injection Well

Provide a narrative description of the work planned to be performed, or that was performed. Use additional pages as necessary. See instructions.

A workover rig capable of performing the required abandonment operations at the required depths will be moved in and set up over the core hole. The core hole will be inspected to determine the depth to which the hole remains open and if any obstructions are present in the core hole; the presence and condition of any existing collar will also be documented. If necessary, the core hole will be cleaned out to a depth of at least 100 feet below the bedrock-LBFU contact to enable placement of cement seals.

If collar is present, an attempt will be made to remove it. If removal of the collar is not feasible, it will be left in the hole and perforated as needed to allow an annular seal to be placed to a depth of at least 25 feet bgs. In areas of agricultural use, the surface casing will be cut at least 5 feet bgs and removed.

If the collar cannot be removed, it will be perforated from at least 20 feet below the bedrock-LBFU contact to at least 20 feet above the contact; from at least 20 feet below the base of the MFGU to at least 20 feet above the top of the MFGU; and from at least 25 feet bgs to 5 feet bgs.

A tremie pipe will be used to place Type V cement in the open core hole from the bottom of the core hole to the top of the core hole. Cement retainers, as described above, will be used to force cement grout into the annulus and behind perforated intervals, as necessary.

If the hole has been obstructed, as much cement as possible will be placed from 100 feet below the LBFU-bedrock contact to the top of the core hole.

The volume of Type V cement will be recorded and will not be less than the estimated volume of material required to fill each interval. All cement grout will consist of Type V cement, or equivalent approved in accordance with the UIC Permit.

Certification

I certify under the penalty of law that I have personally examined and am familiar with the information submitted in this document and all attachments and that, based on my inquiry of those individuals immediately responsible for obtaining the information, I believe that the information is true, accurate, and complete. I am aware that there are significant penalties for submitting false information, including the possibliity of fine and imprisonment. (Ref. 40 CFR § 144.32)

Name and Official Title *(Please type or print)*	Signature	Date Signed
Dan Johnson, VP - General Manager		10/3/2019

INSTRUCTIONS FOR FORM 7520-19

This form replaces forms 7520-12 and 7520-14. Use this form only when work is planned or has occurred that affects the well's construction or operation as an injection well, including work on the casing, tubing or packer (or for shallow Class V wells, the subsurface fluid emplacement network). Use one form per injection well. While reports or other information developed by contractors or service companies may be attached, this form must be signed by a responsible entity as described at 40 CFR 144.32. Note: operators closing Class V wells should use Form 7520-17.

NAME, ADDRESS, PHONE AND/OR EMAIL OF PERMITTEE: Enter the name and street address, city/town, state, and ZIP code of the permittee. Also provide an email address (if available) and/or a phone number.

PERMIT OR EPA ID NUMBER: Enter the well identification number or permit number assigned to the well by the EPA or the permitting authority.

API NUMBER: Enter the number assigned by the local jurisdiction (usually a State Oil and Gas Agency) using the American Petroleum Institute standard numbering system.

FULL WELL NAME: Enter the full name of the well or project.

Enter the **STATE** and **COUNTY** where the well is located. For States that do not have counties, use the name of that State's equivalent jurisdiction at a more local level.

WELL LOCATION: Fill in the complete township, range, and section to the nearest quarter-quarter section. A township is north or south of the baseline, and a range is east or west of the principal meridian (e.g., T12N, R34W). Also include the distance, in feet, from the nearest north or south line and nearest east or west line of the quarter-section. Also, enter the **latitude** and **longitude** of the well in decimal degrees, to five or six places if possible; be sure to include a negative sign for the longitude of a well in the Western Hemisphere and a negative sign for the latitude of a well in the Southern Hemisphere.

Enter the **WELL CLASS,** i.e., the class of injection well as defined in 40 CFR 144.6.

TIMING OF THE ACTION: Check ***Notice prior to work*** if the activity has not yet occurred (i.e., is planned). Check ***Report after work*** if the activity described has already occurred. As appropriate, include the date the activity is expected to start or the date the activity was completed. (Note this may not be available, e.g., for a plugging plan submitted with a permit application.)

TYPE OF ACTION: Check the appropriate box to describe the kind of activity being reported. Check ***Well Rework*** for work that was/will be performed on the well after it has already been in operation as an injection well. Check ***Plugging and Abandonment*** to report on plans for or descriptions of final closure/plugging after use as an injection well. Check ***Conversion to a Non-Injection Well*** if the well is to be converted to something other than an injection well.

Provide a **NARRATIVE DESCRIPTION** of the work planned to be performed, or that was performed. The narrative should include a description of the main procedures planned or that occurred during the work activity. A service company report, daily report, or similar document may be attached if it includes all the requested information and is clear and legible.

For well reworks, include the following information: The reason for the well rework; depths of activity; type of activity; changes to injection well configuration, well casing, or cement behind casing; any plug added to the well and its depth; any newly drilled interval and its depth; method(s) to demonstrate that the well has mechanical integrity (as applicable); and any deviations from the approved rework plan (as applicable).

For a well plugging plan, include the following information: Reason for the well plugging; number of plugs placed, and their depths; materials used as plugs (e.g., cast iron bridge plug, cement, cement retainer); method to set plugs; and wait-on-cement times, if any. Also provide one or more cost estimates from an independent firm in the business of plugging and abandoning wells to plug the well as described in the plan.

For well plugging affidavit, include the following information: Reason for the well plugging; number of plugs placed, and their depths; materials used as plugs (e.g., cast iron bridge plug, cement, cement retainer); method to set plugs; wait-on-cement times, if any; and any deviations from the approved plugging plan (if applicable).

For conversion to a non-injection well, include the following information: Depths of activity; type of activity; changes to injection well configuration, well casing, or cement behind casing; any plug added to the well and its depth; any newly drilled interval and its depth; depths of new perforations; and method(s) to demonstrate that the well has mechanical integrity (as applicable).

For all of the above activities, include a well sketch depicting the work, results of well tests/logging performed, service company tickets, and any other available information demonstrating how the work was/is to be performed. Also, specify whether depths are below ground surface, relative to Kelly bushing, etc.

CERTIFICATION: This form must be signed and dated by either: a responsible corporate officer for a corporation, by a general partner for a partnership, by the proprietor of a sole proprietorship, or by a principal executive or ranking elected official for a public agency.

PAPERWORK REDUCTION ACT NOTICE: The public reporting and recordkeeping burden for this collection of information is estimated to average between 6.0 and 7.9 hours per response, depending on the injection well class. Burden means the total time, effort, or financial resource expended by persons to generate, maintain, retain, or disclose or provide information to or for a Federal Agency. This includes the time needed to review instructions; develop, acquire, install, and utilize technology and systems for the purposes of collecting, validating, and verifying information, processing and maintaining information, and disclosing and providing information; adjust the existing ways to comply with any previously applicable instructions and requirements; train personnel to be able to respond to the collection of information; search data sources; complete and review the collection of information; and, transmit or otherwise disclose the information. An agency may not conduct or sponsor, and a person is not required to respond to, a collection of information unless it displays a currently valid OMB control number. Send comments on the Agency's need for this information, the accuracy of the provided burden estimates, and any suggested methods for minimizing respondent burden, including the use of automated collection techniques to Director, Collection Strategies Division, U.S. Environmental Protection Agency (2822), 1200 Pennsylvania Ave., NW., Washington, D.C. 20460. Include the OMB control number in any correspondence. Do not send the completed forms to this address.

AS-BUILT COREHOLE 137

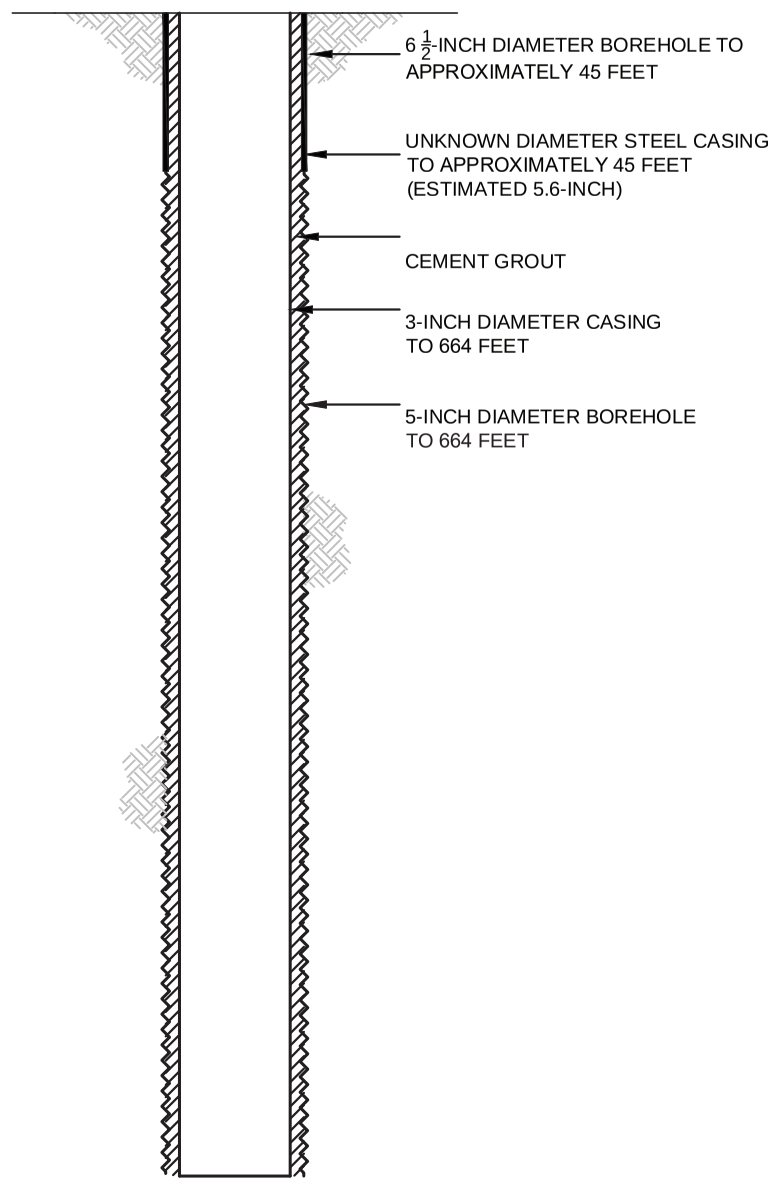

PROPOSED PLUGGING AND ABANDONMENT COREHOLE 137

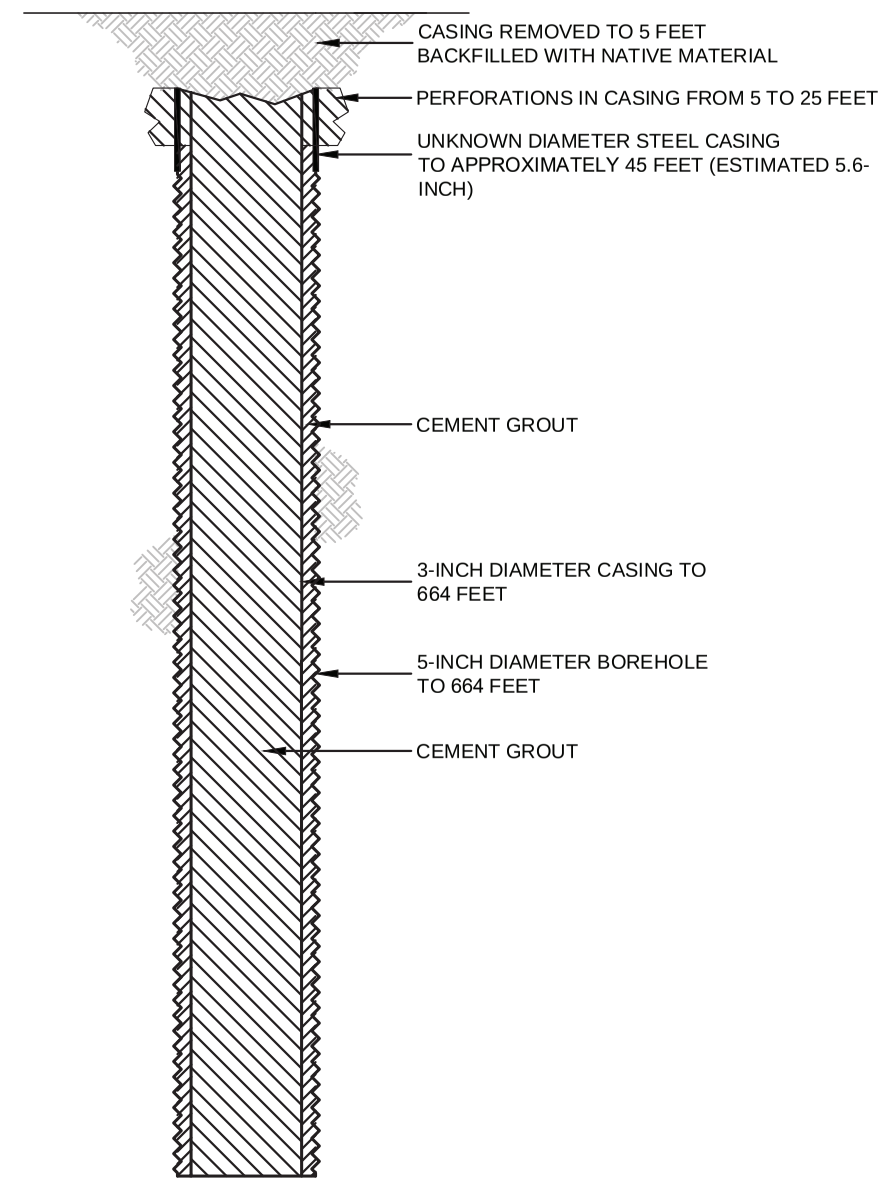

HALEY ALDRICH

FLORENCE COPPER, INC.
FLORENCE, ARIZONA

COREHOLE 137 DIAGRAM

FLORENCE COPPER INC.

NOT TO SCALE
SEPTEMBER 2019

FIGURE 1

MOBINI, GITA Printed: 4/21/2017 12:13 PM Layout: ABANDON (2)
G:\PROJECTS\CURIS RESOURCES\38706-CURIS FEASIBILITY\DRAWINGS\EPA\WELL\ABANDON\448S_ABANDON.DWG

OMB No. 2040-0042 Approval Expires 4/30/2022

United States Environmental Protection Agency

WELL REWORK RECORD, PLUGGING AND ABANDONMENT PLAN, OR PLUGGING AND ABANDONMENT AFFIDAVIT

Name and Address, Phone Number and/or Email of Permittee

Florence Copper Project
1575 W Hunt Hwy,
Florence, AZ 85132

Permit or EPA ID Number	API Number	Full Well Name
R9UIC-AZ3-FY11-1		138

State	County
Arizona	Pinal

Locate well in two directions from nearest lines of quarter section and drilling unit

Latitude 33.05331931

Longitude -111.4313695

Surface Location

SE **1/4 of** NW **1/4 of Section** 28 **Township** 4S **Range** 9E

_____ **ft. from (N/S)** _____ **Line of quarter section**

_____ **ft. from (E/W)** _____ **Line of quarter section.**

Well Class	Timing of Action (pick one)	Type of Action (pick one)
☐ Class I ☐ Class II ☑ Class III ☐ Class V	☑ Notice Prior to Work Date Expected to Commence March 2021 ☐ Report After Work Date Work Ended	☐ Well Rework ☑ Plugging and Abandonment ☐ Conversion to a Non-Injection Well

Provide a narrative description of the work planned to be performed, or that was performed. Use additional pages as necessary. See instructions.

A workover rig capable of performing the required abandonment operations at the required depths will be moved in and set up over the core hole. The core hole will be inspected to determine the depth to which the hole remains open and if any obstructions are present in the core hole; the presence and condition of any existing collar will also be documented. If necessary, the core hole will be cleaned out to a depth of at least 100 feet below the bedrock-LBFU contact to enable placement of cement seals.

If collar is present, an attempt will be made to remove it. If removal of the collar is not feasible, it will be left in the hole and perforated as needed to allow an annular seal to be placed to a depth of at least 25 feet bgs. In areas of agricultural use, the surface casing will be cut at least 5 feet bgs and removed.

If the collar cannot be removed, it will be perforated from at least 20 feet below the bedrock-LBFU contact to at least 20 feet above the contact; from at least 20 feet below the base of the MFGU to at least 20 feet above the top of the MFGU; and from at least 25 feet bgs to 5 feet bgs.

A tremie pipe will be used to place Type V cement in the open core hole from the bottom of the core hole to the top of the core hole. Cement retainers, as described above, will be used to force cement grout into the annulus and behind perforated intervals, as necessary.

If the hole has been obstructed, as much cement as possible will be placed from 100 feet below the LBFU-bedrock contact to the top of the core hole.

The volume of Type V cement will be recorded and will not be less than the estimated volume of material required to fill each interval. All cement grout will consist of Type V cement, or equivalent approved in accordance with the UIC Permit.

Certification

I certify under the penalty of law that I have personally examined and am familiar with the information submitted in this document and all attachments and that, based on my inquiry of those individuals immediately responsible for obtaining the information, I believe that the information is true, accurate, and complete. I am aware that there are significant penalties for submitting false information, including the possibliity of fine and imprisonment. (Ref. 40 CFR § 144.32)

Name and Official Title *(Please type or print)*	Signature	Date Signed
Dan Johnson, VP - General Manager		10/3/2019

INSTRUCTIONS FOR FORM 7520-19

This form replaces forms 7520-12 and 7520-14. Use this form only when work is planned or has occurred that affects the well's construction or operation as an injection well, including work on the casing, tubing or packer (or for shallow Class V wells, the subsurface fluid emplacement network). Use one form per injection well. While reports or other information developed by contractors or service companies may be attached, this form must be signed by a responsible entity as described at 40 CFR 144.32. Note: operators closing Class V wells should use Form 7520-17.

NAME, ADDRESS, PHONE AND/OR EMAIL OF PERMITTEE: Enter the name and street address, city/town, state, and ZIP code of the permittee. Also provide an email address (if available) and/or a phone number.

PERMIT OR EPA ID NUMBER: Enter the well identification number or permit number assigned to the well by the EPA or the permitting authority.

API NUMBER: Enter the number assigned by the local jurisdiction (usually a State Oil and Gas Agency) using the American Petroleum Institute standard numbering system.

FULL WELL NAME: Enter the full name of the well or project.

Enter the **STATE** and **COUNTY** where the well is located. For States that do not have counties, use the name of that State's equivalent jurisdiction at a more local level.

WELL LOCATION: Fill in the complete township, range, and section to the nearest quarter-quarter section. A township is north or south of the baseline, and a range is east or west of the principal meridian (e.g., T12N, R34W). Also include the distance, in feet, from the nearest north or south line and nearest east or west line of the quarter-section. Also, enter the **latitude** and **longitude** of the well in decimal degrees, to five or six places if possible; be sure to include a negative sign for the longitude of a well in the Western Hemisphere and a negative sign for the latitude of a well in the Southern Hemisphere.

Enter the **WELL CLASS,** i.e., the class of injection well as defined in 40 CFR 144.6.

TIMING OF THE ACTION: Check ***Notice prior to work*** if the activity has not yet occurred (i.e., is planned). Check ***Report after work*** if the activity described has already occurred. As appropriate, include the date the activity is expected to start or the date the activity was completed. (Note this may not be available, e.g., for a plugging plan submitted with a permit application.)

TYPE OF ACTION: Check the appropriate box to describe the kind of activity being reported. Check ***Well Rework*** for work that was/will be performed on the well after it has already been in operation as an injection well. Check ***Plugging and Abandonment*** to report on plans for or descriptions of final closure/plugging after use as an injection well. Check ***Conversion to a Non-Injection Well*** if the well is to be converted to something other than an injection well.

Provide a **NARRATIVE DESCRIPTION** of the work planned to be performed, or that was performed. The narrative should include a description of the main procedures planned or that occurred during the work activity. A service company report, daily report, or similar document may be attached if it includes all the requested information and is clear and legible.

For well reworks, include the following information: The reason for the well rework; depths of activity; type of activity; changes to injection well configuration, well casing, or cement behind casing; any plug added to the well and its depth; any newly drilled interval and its depth; method(s) to demonstrate that the well has mechanical integrity (as applicable); and any deviations from the approved rework plan (as applicable).

For a well plugging plan, include the following information: Reason for the well plugging; number of plugs placed, and their depths; materials used as plugs (e.g., cast iron bridge plug, cement, cement retainer); method to set plugs; and wait-on-cement times, if any. Also provide one or more cost estimates from an independent firm in the business of plugging and abandoning wells to plug the well as described in the plan.

For well plugging affidavit, include the following information: Reason for the well plugging; number of plugs placed, and their depths; materials used as plugs (e.g., cast iron bridge plug, cement, cement retainer); method to set plugs; wait-on-cement times, if any; and any deviations from the approved plugging plan (if applicable).

For conversion to a non-injection well, include the following information: Depths of activity; type of activity; changes to injection well configuration, well casing, or cement behind casing; any plug added to the well and its depth; any newly drilled interval and its depth; depths of new perforations; and method(s) to demonstrate that the well has mechanical integrity (as applicable).

For all of the above activities, include a well sketch depicting the work, results of well tests/logging performed, service company tickets, and any other available information demonstrating how the work was/is to be performed. Also, specify whether depths are below ground surface, relative to Kelly bushing, etc.

CERTIFICATION: This form must be signed and dated by either: a responsible corporate officer for a corporation, by a general partner for a partnership, by the proprietor of a sole proprietorship, or by a principal executive or ranking elected official for a public agency.

PAPERWORK REDUCTION ACT NOTICE: The public reporting and recordkeeping burden for this collection of information is estimated to average between 6.0 and 7.9 hours per response, depending on the injection well class. Burden means the total time, effort, or financial resource expended by persons to generate, maintain, retain, or disclose or provide information to or for a Federal Agency. This includes the time needed to review instructions; develop, acquire, install, and utilize technology and systems for the purposes of collecting, validating, and verifying information, processing and maintaining information, and disclosing and providing information; adjust the existing ways to comply with any previously applicable instructions and requirements; train personnel to be able to respond to the collection of information; search data sources; complete and review the collection of information; and, transmit or otherwise disclose the information. An agency may not conduct or sponsor, and a person is not required to respond to, a collection of information unless it displays a currently valid OMB control number. Send comments on the Agency's need for this information, the accuracy of the provided burden estimates, and any suggested methods for minimizing respondent burden, including the use of automated collection techniques to Director, Collection Strategies Division, U.S. Environmental Protection Agency (2822), 1200 Pennsylvania Ave., NW., Washington, D.C. 20460. Include the OMB control number in any correspondence. Do not send the completed forms to this address.

AS-BUILT COREHOLE 138

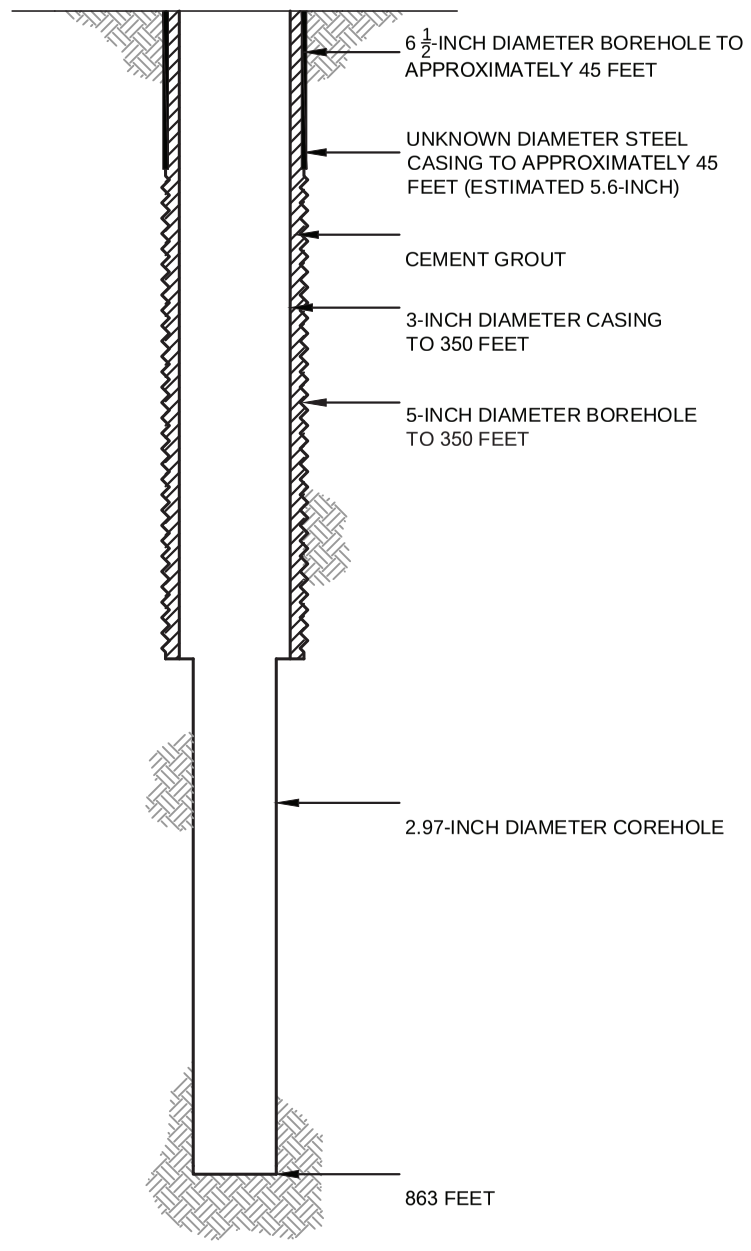

PROPOSED PLUGGING AND ABANDONMENT COREHOLE 138

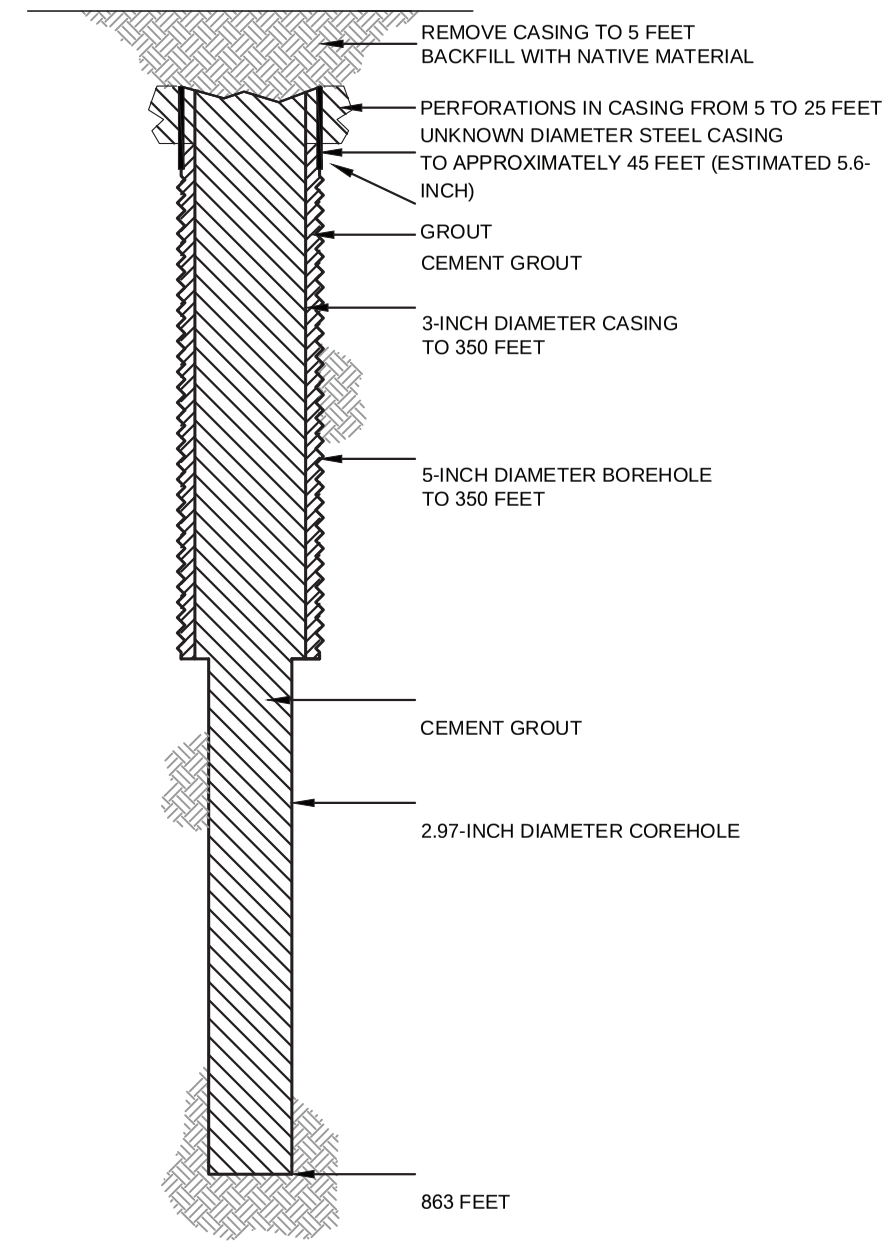

HALEY ALDRICH

FLORENCE COPPER, INC.
FLORENCE, ARIZONA

COREHOLE 138 DIAGRAM

FLORENCE COPPER INC.

NOT TO SCALE
SEPTEMBER 2019

FIGURE 1

MOBINI, GITA Printed: 4/21/2017 12:00 PM Layout: ABANDON (2)
G:\PROJECTS\CURIS RESOURCES\38706-CURIS FEASIBILITY\DRAWINGS\EPA\WELL ABANDON\415S_ABANDON.DWG

OMB No. 2040-0042 Approval Expires 4/30/2022

United States Environmental Protection Agency

WELL REWORK RECORD, PLUGGING AND ABANDONMENT PLAN, OR PLUGGING AND ABANDONMENT AFFIDAVIT

Name and Address, Phone Number and/or Email of Permittee

Florence Copper Project
1575 W Hunt Hwy,
Florence, AZ 85132

Permit or EPA ID Number	API Number	Full Well Name
R9UIC-AZ3-FY11-1		139S

State	County
Arizona	Pinal

Locate well in two directions from nearest lines of quarter section and drilling unit

Latitude 33.05093237

Longitude -111.4297355

Surface Location

NW **1/4 of** SE **1/4 of Section** 28 **Township** 4S **Range** 9E

_____ **ft. from (N/S)** _____ **Line of quarter section**

_____ **ft. from (E/W)** _____ **Line of quarter section.**

Well Class	Timing of Action (pick one)	Type of Action (pick one)
☐ Class I ☐ Class II ☑ Class III ☐ Class V	☑ Notice Prior to Work Date Expected to Commence March 2021 ☐ Report After Work Date Work Ended	☐ Well Rework ☑ Plugging and Abandonment ☐ Conversion to a Non-Injection Well

Provide a narrative description of the work planned to be performed, or that was performed. Use additional pages as necessary. See instructions.

A workover rig capable of performing the required abandonment operations at the required depths will be moved in and set up over the core hole. The core hole will be inspected to determine the depth to which the hole remains open and if any obstructions are present in the core hole; the presence and condition of any existing collar will also be documented. If necessary, the core hole will be cleaned out to a depth of at least 100 feet below the bedrock-LBFU contact to enable placement of cement seals.

If collar is present, an attempt will be made to remove it. If removal of the collar is not feasible, it will be left in the hole and perforated as needed to allow an annular seal to be placed to a depth of at least 25 feet bgs. In areas of agricultural use, the surface casing will be cut at least 5 feet bgs and removed.

If the collar cannot be removed, it will be perforated from at least 20 feet below the bedrock-LBFU contact to at least 20 feet above the contact; from at least 20 feet below the base of the MFGU to at least 20 feet above the top of the MFGU; and from at least 25 feet bgs to 5 feet bgs.

A tremie pipe will be used to place Type V cement in the open core hole from the bottom of the core hole to the top of the core hole. Cement retainers, as described above, will be used to force cement grout into the annulus and behind perforated intervals, as necessary.

If the hole has been obstructed, as much cement as possible will be placed from 100 feet below the LBFU-bedrock contact to the top of the core hole.

The volume of Type V cement will be recorded and will not be less than the estimated volume of material required to fill each interval. All cement grout will consist of Type V cement, or equivalent approved in accordance with the UIC Permit.

Certification

I certify under the penalty of law that I have personally examined and am familiar with the information submitted in this document and all attachments and that, based on my inquiry of those individuals immediately responsible for obtaining the information, I believe that the information is true, accurate, and complete. I am aware that there are significant penalties for submitting false information, including the possibliity of fine and imprisonment. (Ref. 40 CFR § 144.32)

Name and Official Title *(Please type or print)*	Signature	Date Signed
Dan Johnson, VP - General Manager		10/3/2019

INSTRUCTIONS FOR FORM 7520-19

This form replaces forms 7520-12 and 7520-14. Use this form only when work is planned or has occurred that affects the well's construction or operation as an injection well, including work on the casing, tubing or packer (or for shallow Class V wells, the subsurface fluid emplacement network). Use one form per injection well. While reports or other information developed by contractors or service companies may be attached, this form must be signed by a responsible entity as described at 40 CFR 144.32. Note: operators closing Class V wells should use Form 7520-17.

NAME, ADDRESS, PHONE AND/OR EMAIL OF PERMITTEE: Enter the name and street address, city/town, state, and ZIP code of the permittee. Also provide an email address (if available) and/or a phone number.

PERMIT OR EPA ID NUMBER: Enter the well identification number or permit number assigned to the well by the EPA or the permitting authority.

API NUMBER: Enter the number assigned by the local jurisdiction (usually a State Oil and Gas Agency) using the American Petroleum Institute standard numbering system.

FULL WELL NAME: Enter the full name of the well or project.

Enter the **STATE** and **COUNTY** where the well is located. For States that do not have counties, use the name of that State's equivalent jurisdiction at a more local level.

WELL LOCATION: Fill in the complete township, range, and section to the nearest quarter-quarter section. A township is north or south of the baseline, and a range is east or west of the principal meridian (e.g., T12N, R34W). Also include the distance, in feet, from the nearest north or south line and nearest east or west line of the quarter-section. Also, enter the **latitude** and **longitude** of the well in decimal degrees, to five or six places if possible; be sure to include a negative sign for the longitude of a well in the Western Hemisphere and a negative sign for the latitude of a well in the Southern Hemisphere.

Enter the **WELL CLASS,** i.e., the class of injection well as defined in 40 CFR 144.6.

TIMING OF THE ACTION: Check ***Notice prior to work*** if the activity has not yet occurred (i.e., is planned). Check ***Report after work*** if the activity described has already occurred. As appropriate, include the date the activity is expected to start or the date the activity was completed. (Note this may not be available, e.g., for a plugging plan submitted with a permit application.)

TYPE OF ACTION: Check the appropriate box to describe the kind of activity being reported. Check ***Well Rework*** for work that was/will be performed on the well after it has already been in operation as an injection well. Check ***Plugging and Abandonment*** to report on plans for or descriptions of final closure/plugging after use as an injection well. Check ***Conversion to a Non-Injection Well*** if the well is to be converted to something other than an injection well.

Provide a **NARRATIVE DESCRIPTION** of the work planned to be performed, or that was performed. The narrative should include a description of the main procedures planned or that occurred during the work activity. A service company report, daily report, or similar document may be attached if it includes all the requested information and is clear and legible.

For well reworks, include the following information: The reason for the well rework; depths of activity; type of activity; changes to injection well configuration, well casing, or cement behind casing; any plug added to the well and its depth; any newly drilled interval and its depth; method(s) to demonstrate that the well has mechanical integrity (as applicable); and any deviations from the approved rework plan (as applicable).

For a well plugging plan, include the following information: Reason for the well plugging; number of plugs placed, and their depths; materials used as plugs (e.g., cast iron bridge plug, cement, cement retainer); method to set plugs; and wait-on-cement times, if any. Also provide one or more cost estimates from an independent firm in the business of plugging and abandoning wells to plug the well as described in the plan.

For well plugging affidavit, include the following information: Reason for the well plugging; number of plugs placed, and their depths; materials used as plugs (e.g., cast iron bridge plug, cement, cement retainer); method to set plugs; wait-on-cement times, if any; and any deviations from the approved plugging plan (if applicable).

For conversion to a non-injection well, include the following information: Depths of activity; type of activity; changes to injection well configuration, well casing, or cement behind casing; any plug added to the well and its depth; any newly drilled interval and its depth; depths of new perforations; and method(s) to demonstrate that the well has mechanical integrity (as applicable).

For all of the above activities, include a well sketch depicting the work, results of well tests/logging performed, service company tickets, and any other available information demonstrating how the work was/is to be performed. Also, specify whether depths are below ground surface, relative to Kelly bushing, etc.

CERTIFICATION: This form must be signed and dated by either: a responsible corporate officer for a corporation, by a general partner for a partnership, by the proprietor of a sole proprietorship, or by a principal executive or ranking elected official for a public agency.

PAPERWORK REDUCTION ACT NOTICE: The public reporting and recordkeeping burden for this collection of information is estimated to average between 6.0 and 7.9 hours per response, depending on the injection well class. Burden means the total time, effort, or financial resource expended by persons to generate, maintain, retain, or disclose or provide information to or for a Federal Agency. This includes the time needed to review instructions; develop, acquire, install, and utilize technology and systems for the purposes of collecting, validating, and verifying information, processing and maintaining information, and disclosing and providing information; adjust the existing ways to comply with any previously applicable instructions and requirements; train personnel to be able to respond to the collection of information; search data sources; complete and review the collection of information; and, transmit or otherwise disclose the information. An agency may not conduct or sponsor, and a person is not required to respond to, a collection of information unless it displays a currently valid OMB control number. Send comments on the Agency's need for this information, the accuracy of the provided burden estimates, and any suggested methods for minimizing respondent burden, including the use of automated collection techniques to Director, Collection Strategies Division, U.S. Environmental Protection Agency (2822), 1200 Pennsylvania Ave., NW., Washington, D.C. 20460. Include the OMB control number in any correspondence. Do not send the completed forms to this address.

AS-BUILT COREHOLE 139S

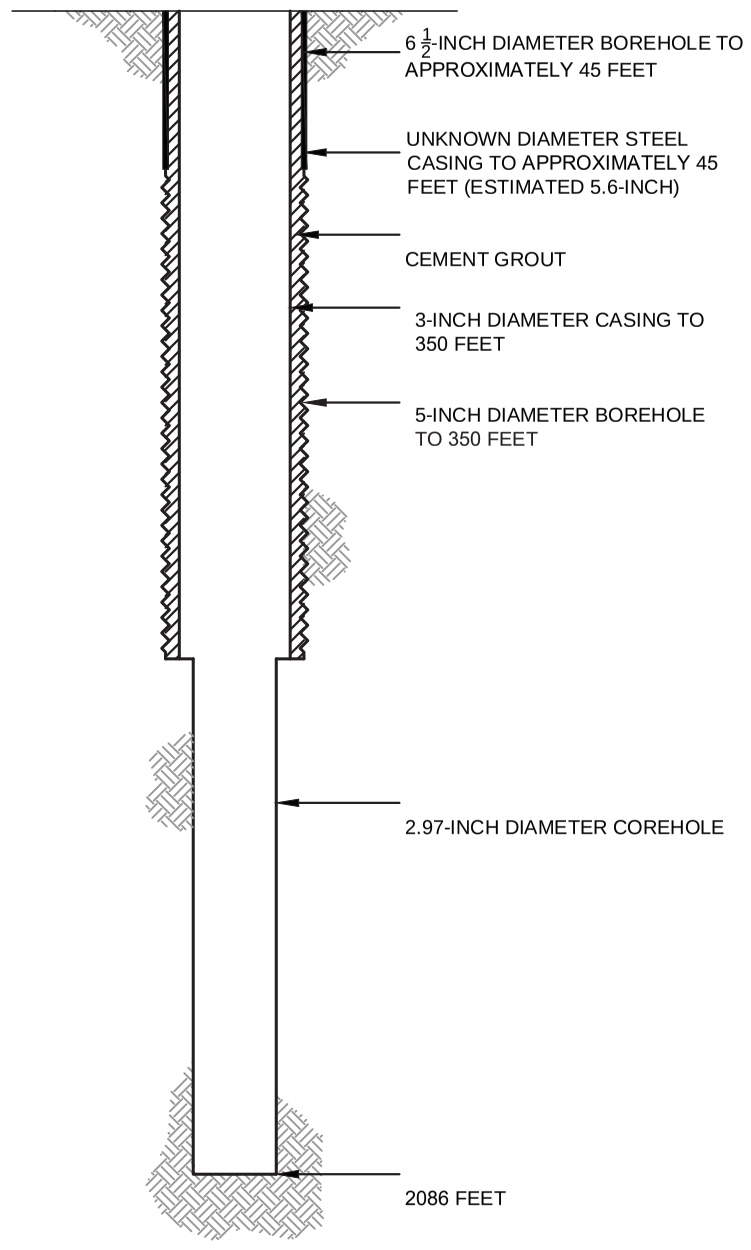

PROPOSED PLUGGING AND ABANDONMENT COREHOLE 139S

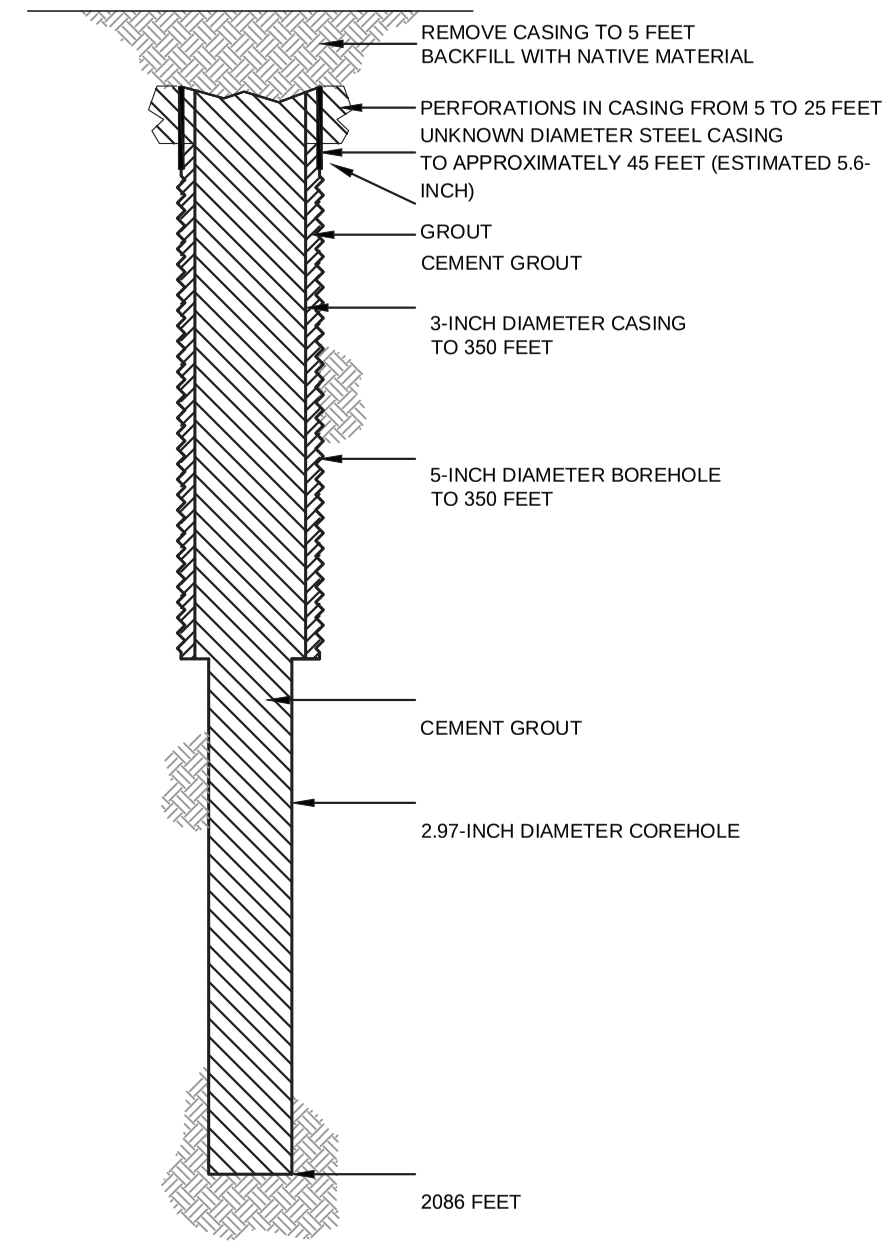

HALEY ALDRICH

FLORENCE COPPER, INC.
FLORENCE, ARIZONA

COREHOLE 139S DIAGRAM

FLORENCE COPPER INC.

NOT TO SCALE
SEPTEMBER 2019

FIGURE 1

MOBINI, GITA Printed: 4/21/2017 12:00 PM Layout: ABANDON (2)
G:\PROJECTS\CURIS RESOURCES\38706-CURIS FEASIBILITY\DRAWINGS\EPA\WELL ABANDON\415S_ABANDON.DWG

OMB No. 2040-0042 Approval Expires 4/30/2022

United States Environmental Protection Agency

WELL REWORK RECORD, PLUGGING AND ABANDONMENT PLAN, OR PLUGGING AND ABANDONMENT AFFIDAVIT

Name and Address, Phone Number and/or Email of Permittee

Florence Copper Project
1575 W Hunt Hwy,
Florence, AZ 85132

Permit or EPA ID Number	API Number	Full Well Name
R9UIC-AZ3-FY11-1		140S

State	County
Arizona	Pinal

Locate well in two directions from nearest lines of quarter section and drilling unit

Latitude 33.05092715

Longitude -111.4281213

Surface Location

NW **1/4 of** SE **1/4 of Section** 28 **Township** 4S **Range** 9E

_____ **ft. from (N/S)** _____ **Line of quarter section**

_____ **ft. from (E/W)** _____ **Line of quarter section.**

Well Class	Timing of Action (pick one)	Type of Action (pick one)
☐ Class I ☐ Class II ☑ Class III ☐ Class V	☑ Notice Prior to Work Date Expected to Commence March 2021 ☐ Report After Work Date Work Ended	☐ Well Rework ☑ Plugging and Abandonment ☐ Conversion to a Non-Injection Well

Provide a narrative description of the work planned to be performed, or that was performed. Use additional pages as necessary. See instructions.

A workover rig capable of performing the required abandonment operations at the required depths will be moved in and set up over the core hole. The core hole will be inspected to determine the depth to which the hole remains open and if any obstructions are present in the core hole; the presence and condition of any existing collar will also be documented. If necessary, the core hole will be cleaned out to a depth of at least 100 feet below the bedrock-LBFU contact to enable placement of cement seals.

If collar is present, an attempt will be made to remove it. If removal of the collar is not feasible, it will be left in the hole and perforated as needed to allow an annular seal to be placed to a depth of at least 25 feet bgs. In areas of agricultural use, the surface casing will be cut at least 5 feet bgs and removed.

If the collar cannot be removed, it will be perforated from at least 20 feet below the bedrock-LBFU contact to at least 20 feet above the contact; from at least 20 feet below the base of the MFGU to at least 20 feet above the top of the MFGU; and from at least 25 feet bgs to 5 feet bgs.

A tremie pipe will be used to place Type V cement in the open core hole from the bottom of the core hole to the top of the core hole. Cement retainers, as described above, will be used to force cement grout into the annulus and behind perforated intervals, as necessary.

If the hole has been obstructed, as much cement as possible will be placed from 100 feet below the LBFU-bedrock contact to the top of the core hole.

The volume of Type V cement will be recorded and will not be less than the estimated volume of material required to fill each interval. All cement grout will consist of Type V cement, or equivalent approved in accordance with the UIC Permit.

Certification

I certify under the penalty of law that I have personally examined and am familiar with the information submitted in this document and all attachments and that, based on my inquiry of those individuals immediately responsible for obtaining the information, I believe that the information is true, accurate, and complete. I am aware that there are significant penalties for submitting false information, including the possibliity of fine and imprisonment. (Ref. 40 CFR § 144.32)

Name and Official Title *(Please type or print)*	Signature	Date Signed
Dan Johnson, VP - General Manager		10/3/2019

INSTRUCTIONS FOR FORM 7520-19

This form replaces forms 7520-12 and 7520-14. Use this form only when work is planned or has occurred that affects the well's construction or operation as an injection well, including work on the casing, tubing or packer (or for shallow Class V wells, the subsurface fluid emplacement network). Use one form per injection well. While reports or other information developed by contractors or service companies may be attached, this form must be signed by a responsible entity as described at 40 CFR 144.32. Note: operators closing Class V wells should use Form 7520-17.

NAME, ADDRESS, PHONE AND/OR EMAIL OF PERMITTEE: Enter the name and street address, city/town, state, and ZIP code of the permittee. Also provide an email address (if available) and/or a phone number.

PERMIT OR EPA ID NUMBER: Enter the well identification number or permit number assigned to the well by the EPA or the permitting authority.

API NUMBER: Enter the number assigned by the local jurisdiction (usually a State Oil and Gas Agency) using the American Petroleum Institute standard numbering system.

FULL WELL NAME: Enter the full name of the well or project.

Enter the **STATE** and **COUNTY** where the well is located. For States that do not have counties, use the name of that State's equivalent jurisdiction at a more local level.

WELL LOCATION: Fill in the complete township, range, and section to the nearest quarter-quarter section. A township is north or south of the baseline, and a range is east or west of the principal meridian (e.g., T12N, R34W). Also include the distance, in feet, from the nearest north or south line and nearest east or west line of the quarter-section. Also, enter the **latitude** and **longitude** of the well in decimal degrees, to five or six places if possible; be sure to include a negative sign for the longitude of a well in the Western Hemisphere and a negative sign for the latitude of a well in the Southern Hemisphere.

Enter the **WELL CLASS,** i.e., the class of injection well as defined in 40 CFR 144.6.

TIMING OF THE ACTION: Check ***Notice prior to work*** if the activity has not yet occurred (i.e., is planned). Check ***Report after work*** if the activity described has already occurred. As appropriate, include the date the activity is expected to start or the date the activity was completed. (Note this may not be available, e.g., for a plugging plan submitted with a permit application.)

TYPE OF ACTION: Check the appropriate box to describe the kind of activity being reported. Check ***Well Rework*** for work that was/will be performed on the well after it has already been in operation as an injection well. Check ***Plugging and Abandonment*** to report on plans for or descriptions of final closure/plugging after use as an injection well. Check ***Conversion to a Non-Injection Well*** if the well is to be converted to something other than an injection well.

Provide a **NARRATIVE DESCRIPTION** of the work planned to be performed, or that was performed. The narrative should include a description of the main procedures planned or that occurred during the work activity. A service company report, daily report, or similar document may be attached if it includes all the requested information and is clear and legible.

For well reworks, include the following information: The reason for the well rework; depths of activity; type of activity; changes to injection well configuration, well casing, or cement behind casing; any plug added to the well and its depth; any newly drilled interval and its depth; method(s) to demonstrate that the well has mechanical integrity (as applicable); and any deviations from the approved rework plan (as applicable).

For a well plugging plan, include the following information: Reason for the well plugging; number of plugs placed, and their depths; materials used as plugs (e.g., cast iron bridge plug, cement, cement retainer); method to set plugs; and wait-on-cement times, if any. Also provide one or more cost estimates from an independent firm in the business of plugging and abandoning wells to plug the well as described in the plan.

For well plugging affidavit, include the following information: Reason for the well plugging; number of plugs placed, and their depths; materials used as plugs (e.g., cast iron bridge plug, cement, cement retainer); method to set plugs; wait-on-cement times, if any; and any deviations from the approved plugging plan (if applicable).

For conversion to a non-injection well, include the following information: Depths of activity; type of activity; changes to injection well configuration, well casing, or cement behind casing; any plug added to the well and its depth; any newly drilled interval and its depth; depths of new perforations; and method(s) to demonstrate that the well has mechanical integrity (as applicable).

For all of the above activities, include a well sketch depicting the work, results of well tests/logging performed, service company tickets, and any other available information demonstrating how the work was/is to be performed. Also, specify whether depths are below ground surface, relative to Kelly bushing, etc.

CERTIFICATION: This form must be signed and dated by either: a responsible corporate officer for a corporation, by a general partner for a partnership, by the proprietor of a sole proprietorship, or by a principal executive or ranking elected official for a public agency.

PAPERWORK REDUCTION ACT NOTICE: The public reporting and recordkeeping burden for this collection of information is estimated to average between 6.0 and 7.9 hours per response, depending on the injection well class. Burden means the total time, effort, or financial resource expended by persons to generate, maintain, retain, or disclose or provide information to or for a Federal Agency. This includes the time needed to review instructions; develop, acquire, install, and utilize technology and systems for the purposes of collecting, validating, and verifying information, processing and maintaining information, and disclosing and providing information; adjust the existing ways to comply with any previously applicable instructions and requirements; train personnel to be able to respond to the collection of information; search data sources; complete and review the collection of information; and, transmit or otherwise disclose the information. An agency may not conduct or sponsor, and a person is not required to respond to, a collection of information unless it displays a currently valid OMB control number. Send comments on the Agency's need for this information, the accuracy of the provided burden estimates, and any suggested methods for minimizing respondent burden, including the use of automated collection techniques to Director, Collection Strategies Division, U.S. Environmental Protection Agency (2822), 1200 Pennsylvania Ave., NW., Washington, D.C. 20460. Include the OMB control number in any correspondence. Do not send the completed forms to this address.

AS-BUILT COREHOLE 140S

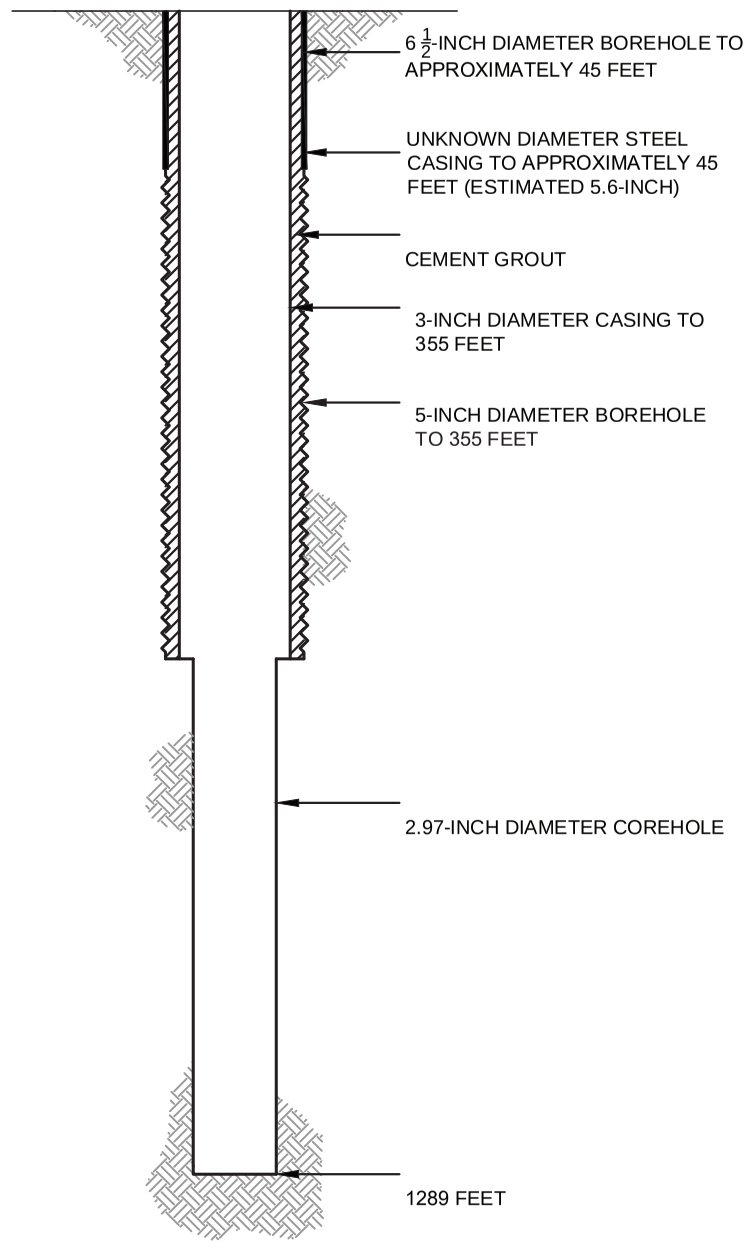

PROPOSED PLUGGING AND ABANDONMENT COREHOLE 140S

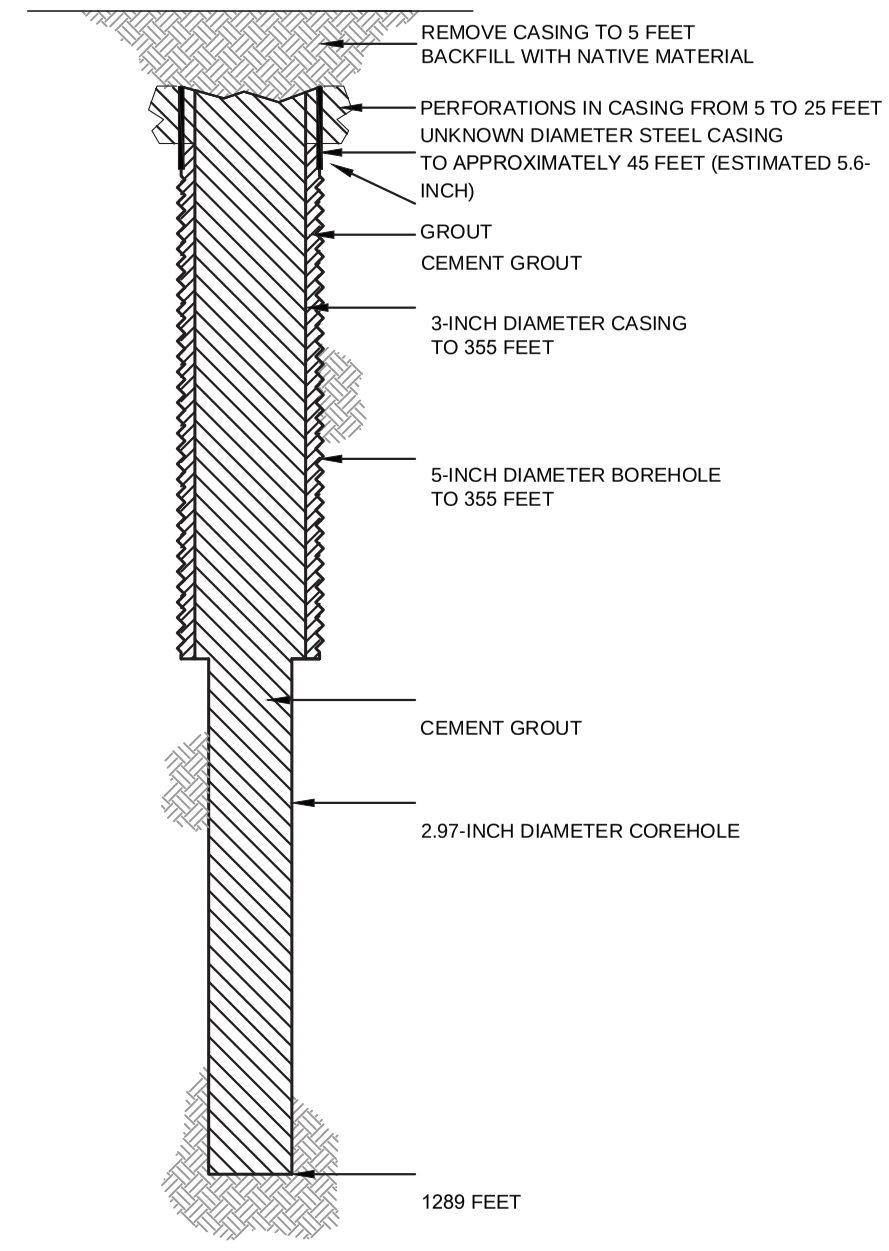

HALEY ALDRICH

FLORENCE COPPER, INC.
FLORENCE, ARIZONA

COREHOLE 140S DIAGRAM

FLORENCE COPPER INC.

NOT TO SCALE
SEPTEMBER 2019

FIGURE 1

MOBINI, GITA Printed: 4/21/2017 12:00 PM Layout: ABANDON (2)
G:\PROJECTS\CURIS RESOURCES\38706-CURIS FEASIBILITY\DRAWINGS\EPA\WELL ABANDON\415S_ABANDON.DWG

OMB No. 2040-0042 Approval Expires 4/30/2022

United States Environmental Protection Agency

WELL REWORK RECORD, PLUGGING AND ABANDONMENT PLAN, OR PLUGGING AND ABANDONMENT AFFIDAVIT

Name and Address, Phone Number and/or Email of Permittee

Florence Copper Project
1575 W Hunt Hwy,
Florence, AZ 85132

Permit or EPA ID Number	API Number	Full Well Name
R9UIC-AZ3-FY11-1		141S

State	County
Arizona	Pinal

Locate well in two directions from nearest lines of quarter section and drilling unit

Latitude 33.05226082

Longitude -111.4240775

Surface Location

NE **1/4 of** SE **1/4 of Section** 28 **Township** 4S **Range** 9E

_____ **ft. from (N/S)** _____ **Line of quarter section**

_____ **ft. from (E/W)** _____ **Line of quarter section.**

Well Class	Timing of Action (pick one)	Type of Action (pick one)
☐ Class I ☐ Class II ☑ Class III ☐ Class V	☑ Notice Prior to Work Date Expected to Commence March 2021 ☐ Report After Work Date Work Ended	☐ Well Rework ☑ Plugging and Abandonment ☐ Conversion to a Non-Injection Well

Provide a narrative description of the work planned to be performed, or that was performed. Use additional pages as necessary. See instructions.

A workover rig capable of performing the required abandonment operations at the required depths will be moved in and set up over the core hole. The core hole will be inspected to determine the depth to which the hole remains open and if any obstructions are present in the core hole; the presence and condition of any existing collar will also be documented. If necessary, the core hole will be cleaned out to a depth of at least 100 feet below the bedrock-LBFU contact to enable placement of cement seals.

If collar is present, an attempt will be made to remove it. If removal of the collar is not feasible, it will be left in the hole and perforated as needed to allow an annular seal to be placed to a depth of at least 25 feet bgs. In areas of agricultural use, the surface casing will be cut at least 5 feet bgs and removed.

If the collar cannot be removed, it will be perforated from at least 20 feet below the bedrock-LBFU contact to at least 20 feet above the contact; from at least 20 feet below the base of the MFGU to at least 20 feet above the top of the MFGU; and from at least 25 feet bgs to 5 feet bgs.

A tremie pipe will be used to place Type V cement in the open core hole from the bottom of the core hole to the top of the core hole. Cement retainers, as described above, will be used to force cement grout into the annulus and behind perforated intervals, as necessary.

If the hole has been obstructed, as much cement as possible will be placed from 100 feet below the LBFU-bedrock contact to the top of the core hole.

The volume of Type V cement will be recorded and will not be less than the estimated volume of material required to fill each interval. All cement grout will consist of Type V cement, or equivalent approved in accordance with the UIC Permit.

Certification

I certify under the penalty of law that I have personally examined and am familiar with the information submitted in this document and all attachments and that, based on my inquiry of those individuals immediately responsible for obtaining the information, I believe that the information is true, accurate, and complete. I am aware that there are significant penalties for submitting false information, including the possibliity of fine and imprisonment. (Ref. 40 CFR § 144.32)

Name and Official Title *(Please type or print)*	Signature	Date Signed
Dan Johnson, VP - General Manager		10/3/2019

INSTRUCTIONS FOR FORM 7520-19

This form replaces forms 7520-12 and 7520-14. Use this form only when work is planned or has occurred that affects the well's construction or operation as an injection well, including work on the casing, tubing or packer (or for shallow Class V wells, the subsurface fluid emplacement network). Use one form per injection well. While reports or other information developed by contractors or service companies may be attached, this form must be signed by a responsible entity as described at 40 CFR 144.32. Note: operators closing Class V wells should use Form 7520-17.

NAME, ADDRESS, PHONE AND/OR EMAIL OF PERMITTEE: Enter the name and street address, city/town, state, and ZIP code of the permittee. Also provide an email address (if available) and/or a phone number.

PERMIT OR EPA ID NUMBER: Enter the well identification number or permit number assigned to the well by the EPA or the permitting authority.

API NUMBER: Enter the number assigned by the local jurisdiction (usually a State Oil and Gas Agency) using the American Petroleum Institute standard numbering system.

FULL WELL NAME: Enter the full name of the well or project.

Enter the **STATE** and **COUNTY** where the well is located. For States that do not have counties, use the name of that State's equivalent jurisdiction at a more local level.

WELL LOCATION: Fill in the complete township, range, and section to the nearest quarter-quarter section. A township is north or south of the baseline, and a range is east or west of the principal meridian (e.g., T12N, R34W). Also include the distance, in feet, from the nearest north or south line and nearest east or west line of the quarter-section. Also, enter the **latitude** and **longitude** of the well in decimal degrees, to five or six places if possible; be sure to include a negative sign for the longitude of a well in the Western Hemisphere and a negative sign for the latitude of a well in the Southern Hemisphere.

Enter the **WELL CLASS,** i.e., the class of injection well as defined in 40 CFR 144.6.

TIMING OF THE ACTION: Check ***Notice prior to work*** if the activity has not yet occurred (i.e., is planned). Check ***Report after work*** if the activity described has already occurred. As appropriate, include the date the activity is expected to start or the date the activity was completed. (Note this may not be available, e.g., for a plugging plan submitted with a permit application.)

TYPE OF ACTION: Check the appropriate box to describe the kind of activity being reported. Check ***Well Rework*** for work that was/will be performed on the well after it has already been in operation as an injection well. Check ***Plugging and Abandonment*** to report on plans for or descriptions of final closure/plugging after use as an injection well. Check ***Conversion to a Non-Injection Well*** if the well is to be converted to something other than an injection well.

Provide a **NARRATIVE DESCRIPTION** of the work planned to be performed, or that was performed. The narrative should include a description of the main procedures planned or that occurred during the work activity. A service company report, daily report, or similar document may be attached if it includes all the requested information and is clear and legible.

For well reworks, include the following information: The reason for the well rework; depths of activity; type of activity; changes to injection well configuration, well casing, or cement behind casing; any plug added to the well and its depth; any newly drilled interval and its depth; method(s) to demonstrate that the well has mechanical integrity (as applicable); and any deviations from the approved rework plan (as applicable).

For a well plugging plan, include the following information: Reason for the well plugging; number of plugs placed, and their depths; materials used as plugs (e.g., cast iron bridge plug, cement, cement retainer); method to set plugs; and wait-on-cement times, if any. Also provide one or more cost estimates from an independent firm in the business of plugging and abandoning wells to plug the well as described in the plan.

For well plugging affidavit, include the following information: Reason for the well plugging; number of plugs placed, and their depths; materials used as plugs (e.g., cast iron bridge plug, cement, cement retainer); method to set plugs; wait-on-cement times, if any; and any deviations from the approved plugging plan (if applicable).

For conversion to a non-injection well, include the following information: Depths of activity; type of activity; changes to injection well configuration, well casing, or cement behind casing; any plug added to the well and its depth; any newly drilled interval and its depth; depths of new perforations; and method(s) to demonstrate that the well has mechanical integrity (as applicable).

For all of the above activities, include a well sketch depicting the work, results of well tests/logging performed, service company tickets, and any other available information demonstrating how the work was/is to be performed. Also, specify whether depths are below ground surface, relative to Kelly bushing, etc.

CERTIFICATION: This form must be signed and dated by either: a responsible corporate officer for a corporation, by a general partner for a partnership, by the proprietor of a sole proprietorship, or by a principal executive or ranking elected official for a public agency.

PAPERWORK REDUCTION ACT NOTICE: The public reporting and recordkeeping burden for this collection of information is estimated to average between 6.0 and 7.9 hours per response, depending on the injection well class. Burden means the total time, effort, or financial resource expended by persons to generate, maintain, retain, or disclose or provide information to or for a Federal Agency. This includes the time needed to review instructions; develop, acquire, install, and utilize technology and systems for the purposes of collecting, validating, and verifying information, processing and maintaining information, and disclosing and providing information; adjust the existing ways to comply with any previously applicable instructions and requirements; train personnel to be able to respond to the collection of information; search data sources; complete and review the collection of information; and, transmit or otherwise disclose the information. An agency may not conduct or sponsor, and a person is not required to respond to, a collection of information unless it displays a currently valid OMB control number. Send comments on the Agency's need for this information, the accuracy of the provided burden estimates, and any suggested methods for minimizing respondent burden, including the use of automated collection techniques to Director, Collection Strategies Division, U.S. Environmental Protection Agency (2822), 1200 Pennsylvania Ave., NW., Washington, D.C. 20460. Include the OMB control number in any correspondence. Do not send the completed forms to this address.

AS-BUILT COREHOLE 141S

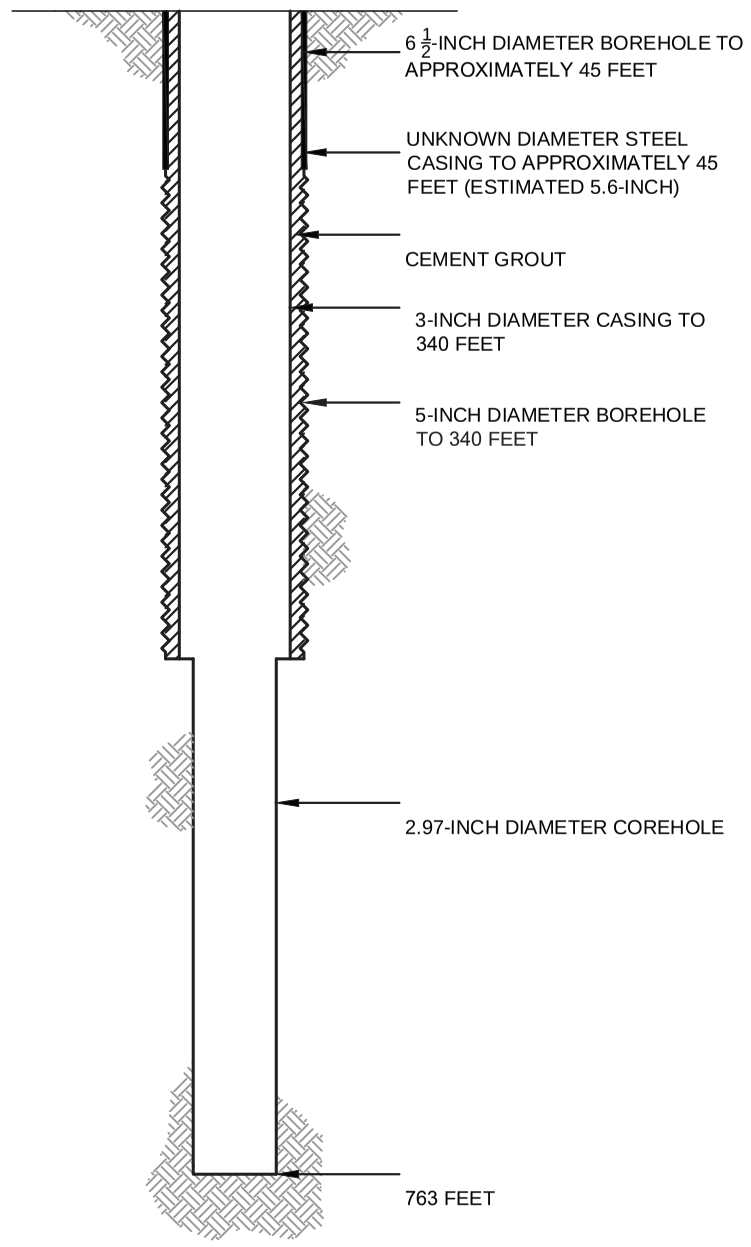

PROPOSED PLUGGING AND ABANDONMENT COREHOLE 141S

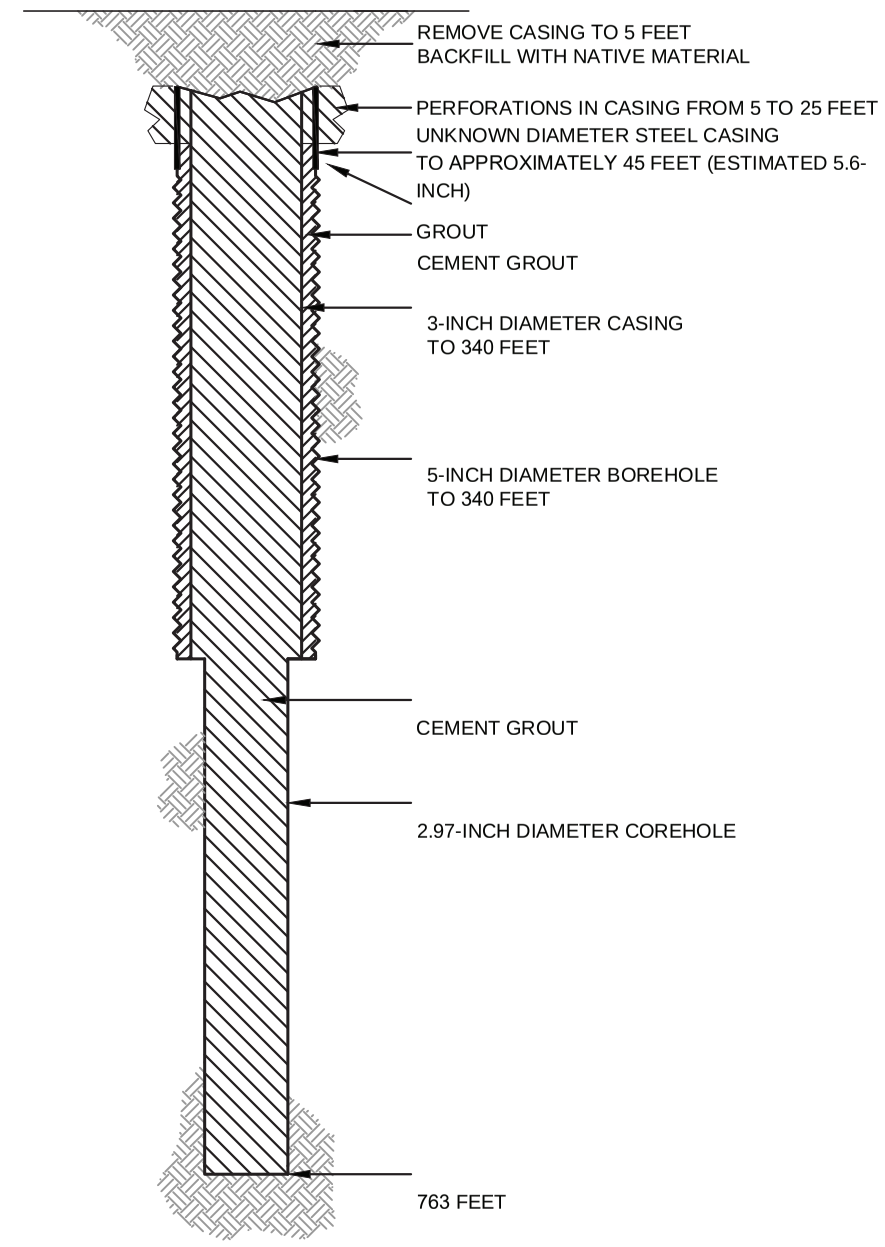

HALEY ALDRICH

FLORENCE COPPER, INC.
FLORENCE, ARIZONA

COREHOLE 141S DIAGRAM

FLORENCE COPPER INC.

NOT TO SCALE
SEPTEMBER 2019

FIGURE 1

MOBINI, GITA Printed: 4/21/2017 12:00 PM Layout: ABANDON (2)
G:\PROJECTS\CURIS RESOURCES\38706-CURIS FEASIBILITY\DRAWINGS\EPA\WELL ABANDON\415S_ABANDON.DWG

OMB No. 2040-0042 Approval Expires 4/30/2022

United States Environmental Protection Agency

EPA

WELL REWORK RECORD, PLUGGING AND ABANDONMENT PLAN, OR PLUGGING AND ABANDONMENT AFFIDAVIT

Name and Address, Phone Number and/or Email of Permittee

Florence Copper Project
1575 W Hunt Hwy,
Florence, AZ 85132

Permit or EPA ID Number	API Number	Full Well Name
R9UIC-AZ3-FY11-1		142MF

State	County
Arizona	Pinal

Locate well in two directions from nearest lines of quarter section and drilling unit

Latitude 33.04619757

Longitude -111.4264997

Surface Location

SW **1/4 of** SE **1/4 of Section** 28 **Township** 4S **Range** 9E

_____ **ft. from (N/S)** _____ **Line of quarter section**

_____ **ft. from (E/W)** _____ **Line of quarter section.**

Well Class	Timing of Action (pick one)	Type of Action (pick one)
☐ Class I ☐ Class II ☑ Class III ☐ Class V	☑ Notice Prior to Work Date Expected to Commence March 2021 ☐ Report After Work Date Work Ended	☐ Well Rework ☑ Plugging and Abandonment ☐ Conversion to a Non-Injection Well

Provide a narrative description of the work planned to be performed, or that was performed. Use additional pages as necessary. See instructions.

A workover rig capable of performing the required abandonment operations at the required depths will be moved in and set up over the core hole. The core hole will be inspected to determine the depth to which the hole remains open and if any obstructions are present in the core hole; the presence and condition of any existing collar will also be documented. If necessary, the core hole will be cleaned out to a depth of at least 100 feet below the bedrock-LBFU contact to enable placement of cement seals.

If collar is present, an attempt will be made to remove it. If removal of the collar is not feasible, it will be left in the hole and perforated as needed to allow an annular seal to be placed to a depth of at least 25 feet bgs. In areas of agricultural use, the surface casing will be cut at least 5 feet bgs and removed.

If the collar cannot be removed, it will be perforated from at least 20 feet below the bedrock-LBFU contact to at least 20 feet above the contact; from at least 20 feet below the base of the MFGU to at least 20 feet above the top of the MFGU; and from at least 25 feet bgs to 5 feet bgs.

A tremie pipe will be used to place Type V cement in the open core hole from the bottom of the core hole to the top of the core hole. Cement retainers, as described above, will be used to force cement grout into the annulus and behind perforated intervals, as necessary.

If the hole has been obstructed, as much cement as possible will be placed from 100 feet below the LBFU-bedrock contact to the top of the core hole.

The volume of Type V cement will be recorded and will not be less than the estimated volume of material required to fill each interval. All cement grout will consist of Type V cement, or equivalent approved in accordance with the UIC Permit.

Certification

I certify under the penalty of law that I have personally examined and am familiar with the information submitted in this document and all attachments and that, based on my inquiry of those individuals immediately responsible for obtaining the information, I believe that the information is true, accurate, and complete. I am aware that there are significant penalties for submitting false information, including the possibliity of fine and imprisonment. (Ref. 40 CFR § 144.32)

Name and Official Title *(Please type or print)*	Signature	Date Signed
Dan Johnson, VP - General Manager		10/3/2019

INSTRUCTIONS FOR FORM 7520-19

This form replaces forms 7520-12 and 7520-14. Use this form only when work is planned or has occurred that affects the well's construction or operation as an injection well, including work on the casing, tubing or packer (or for shallow Class V wells, the subsurface fluid emplacement network). Use one form per injection well. While reports or other information developed by contractors or service companies may be attached, this form must be signed by a responsible entity as described at 40 CFR 144.32. Note: operators closing Class V wells should use Form 7520-17.

NAME, ADDRESS, PHONE AND/OR EMAIL OF PERMITTEE: Enter the name and street address, city/town, state, and ZIP code of the permittee. Also provide an email address (if available) and/or a phone number.

PERMIT OR EPA ID NUMBER: Enter the well identification number or permit number assigned to the well by the EPA or the permitting authority.

API NUMBER: Enter the number assigned by the local jurisdiction (usually a State Oil and Gas Agency) using the American Petroleum Institute standard numbering system.

FULL WELL NAME: Enter the full name of the well or project.

Enter the **STATE** and **COUNTY** where the well is located. For States that do not have counties, use the name of that State's equivalent jurisdiction at a more local level.

WELL LOCATION: Fill in the complete township, range, and section to the nearest quarter-quarter section. A township is north or south of the baseline, and a range is east or west of the principal meridian (e.g., T12N, R34W). Also include the distance, in feet, from the nearest north or south line and nearest east or west line of the quarter-section. Also, enter the **latitude** and **longitude** of the well in decimal degrees, to five or six places if possible; be sure to include a negative sign for the longitude of a well in the Western Hemisphere and a negative sign for the latitude of a well in the Southern Hemisphere.

Enter the **WELL CLASS,** i.e., the class of injection well as defined in 40 CFR 144.6.

TIMING OF THE ACTION: Check ***Notice prior to work*** if the activity has not yet occurred (i.e., is planned). Check ***Report after work*** if the activity described has already occurred. As appropriate, include the date the activity is expected to start or the date the activity was completed. (Note this may not be available, e.g., for a plugging plan submitted with a permit application.)

TYPE OF ACTION: Check the appropriate box to describe the kind of activity being reported. Check ***Well Rework*** for work that was/will be performed on the well after it has already been in operation as an injection well. Check ***Plugging and Abandonment*** to report on plans for or descriptions of final closure/plugging after use as an injection well. Check ***Conversion to a Non-Injection Well*** if the well is to be converted to something other than an injection well.

Provide a **NARRATIVE DESCRIPTION** of the work planned to be performed, or that was performed. The narrative should include a description of the main procedures planned or that occurred during the work activity. A service company report, daily report, or similar document may be attached if it includes all the requested information and is clear and legible.

For well reworks, include the following information: The reason for the well rework; depths of activity; type of activity; changes to injection well configuration, well casing, or cement behind casing; any plug added to the well and its depth; any newly drilled interval and its depth; method(s) to demonstrate that the well has mechanical integrity (as applicable); and any deviations from the approved rework plan (as applicable).

For a well plugging plan, include the following information: Reason for the well plugging; number of plugs placed, and their depths; materials used as plugs (e.g., cast iron bridge plug, cement, cement retainer); method to set plugs; and wait-on-cement times, if any. Also provide one or more cost estimates from an independent firm in the business of plugging and abandoning wells to plug the well as described in the plan.

For well plugging affidavit, include the following information: Reason for the well plugging; number of plugs placed, and their depths; materials used as plugs (e.g., cast iron bridge plug, cement, cement retainer); method to set plugs; wait-on-cement times, if any; and any deviations from the approved plugging plan (if applicable).

For conversion to a non-injection well, include the following information: Depths of activity; type of activity; changes to injection well configuration, well casing, or cement behind casing; any plug added to the well and its depth; any newly drilled interval and its depth; depths of new perforations; and method(s) to demonstrate that the well has mechanical integrity (as applicable).

For all of the above activities, include a well sketch depicting the work, results of well tests/logging performed, service company tickets, and any other available information demonstrating how the work was/is to be performed. Also, specify whether depths are below ground surface, relative to Kelly bushing, etc.

CERTIFICATION: This form must be signed and dated by either: a responsible corporate officer for a corporation, by a general partner for a partnership, by the proprietor of a sole proprietorship, or by a principal executive or ranking elected official for a public agency.

PAPERWORK REDUCTION ACT NOTICE: The public reporting and recordkeeping burden for this collection of information is estimated to average between 6.0 and 7.9 hours per response, depending on the injection well class. Burden means the total time, effort, or financial resource expended by persons to generate, maintain, retain, or disclose or provide information to or for a Federal Agency. This includes the time needed to review instructions; develop, acquire, install, and utilize technology and systems for the purposes of collecting, validating, and verifying information, processing and maintaining information, and disclosing and providing information; adjust the existing ways to comply with any previously applicable instructions and requirements; train personnel to be able to respond to the collection of information; search data sources; complete and review the collection of information; and, transmit or otherwise disclose the information. An agency may not conduct or sponsor, and a person is not required to respond to, a collection of information unless it displays a currently valid OMB control number. Send comments on the Agency's need for this information, the accuracy of the provided burden estimates, and any suggested methods for minimizing respondent burden, including the use of automated collection techniques to Director, Collection Strategies Division, U.S. Environmental Protection Agency (2822), 1200 Pennsylvania Ave., NW., Washington, D.C. 20460. Include the OMB control number in any correspondence. Do not send the completed forms to this address.

AS-BUILT COREHOLE 142MF

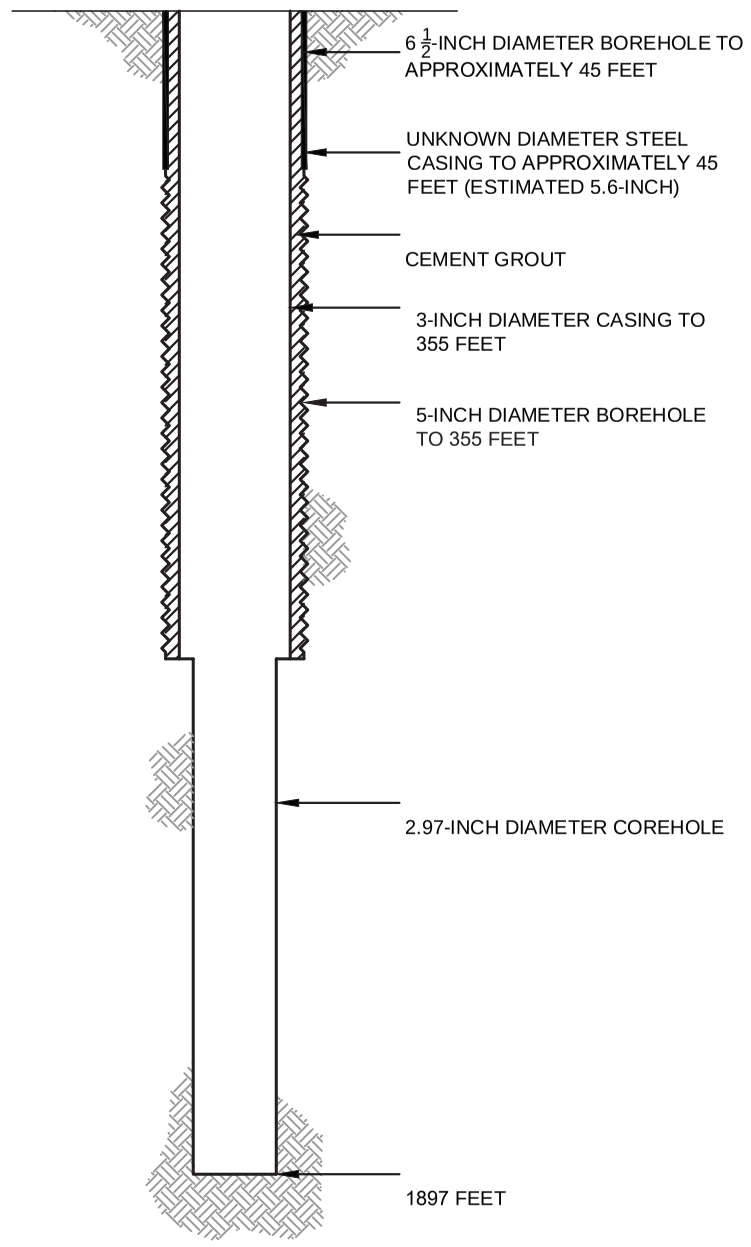

PROPOSED PLUGGING AND ABANDONMENT COREHOLE 142MF

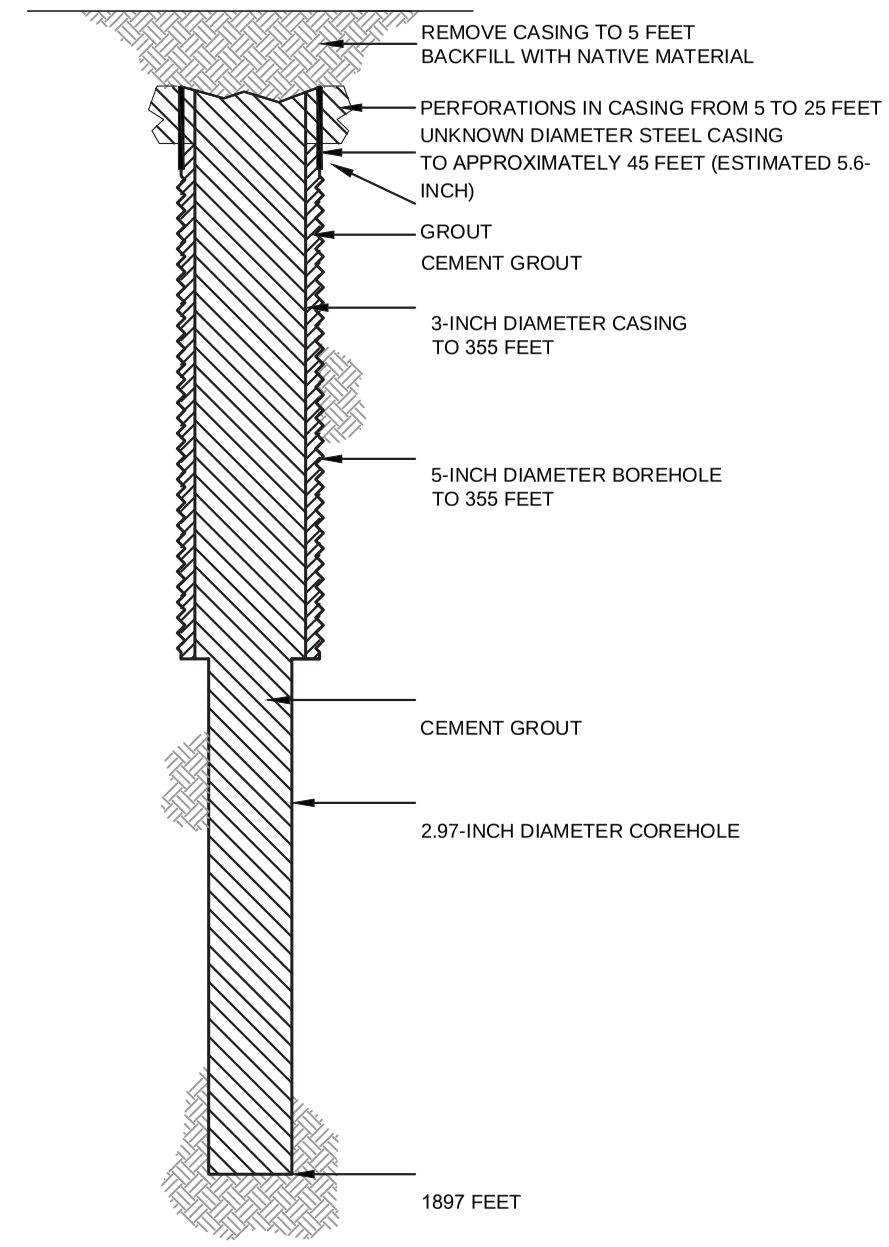

HALEY ALDRICH

FLORENCE COPPER, INC.
FLORENCE, ARIZONA

COREHOLE 142MF DIAGRAM

FLORENCE COPPER INC.

NOT TO SCALE
SEPTEMBER 2019

FIGURE 1

MOBINI, GITA Printed: 4/21/2017 12:00 PM Layout: ABANDON (2)
G:\PROJECTS\CURIS RESOURCES\38706-CURIS FEASIBILITY\DRAWINGS\EPA\WELL ABANDON\415S_ABANDON.DWG

OMB No. 2040-0042 Approval Expires 4/30/2022

United States Environmental Protection Agency

WELL REWORK RECORD, PLUGGING AND ABANDONMENT PLAN, OR PLUGGING AND ABANDONMENT AFFIDAVIT

Name and Address, Phone Number and/or Email of Permittee

Florence Copper Project
1575 W Hunt Hwy,
Florence, AZ 85132

Permit or EPA ID Number	API Number	Full Well Name
R9UIC-AZ3-FY11-1		144

State	County
Arizona	Pinal

Locate well in two directions from nearest lines of quarter section and drilling unit

Latitude 33.05331725

Longitude -111.4297136

Surface Location

SW **1/4 of** NE **1/4 of Section** 28 **Township** 4S **Range** 9E

_____ **ft. from (N/S)** _____ **Line of quarter section**

_____ **ft. from (E/W)** _____ **Line of quarter section.**

Well Class	Timing of Action (pick one)	Type of Action (pick one)
☐ Class I ☐ Class II ☑ Class III ☐ Class V	☑ Notice Prior to Work Date Expected to Commence March 2021 ☐ Report After Work Date Work Ended	☐ Well Rework ☑ Plugging and Abandonment ☐ Conversion to a Non-Injection Well

Provide a narrative description of the work planned to be performed, or that was performed. Use additional pages as necessary. See instructions.

A workover rig capable of performing the required abandonment operations at the required depths will be moved in and set up over the core hole. The core hole will be inspected to determine the depth to which the hole remains open and if any obstructions are present in the core hole; the presence and condition of any existing collar will also be documented. If necessary, the core hole will be cleaned out to a depth of at least 100 feet below the bedrock-LBFU contact to enable placement of cement seals.

If collar is present, an attempt will be made to remove it. If removal of the collar is not feasible, it will be left in the hole and perforated as needed to allow an annular seal to be placed to a depth of at least 25 feet bgs. In areas of agricultural use, the surface casing will be cut at least 5 feet bgs and removed.

If the collar cannot be removed, it will be perforated from at least 20 feet below the bedrock-LBFU contact to at least 20 feet above the contact; from at least 20 feet below the base of the MFGU to at least 20 feet above the top of the MFGU; and from at least 25 feet bgs to 5 feet bgs.

A tremie pipe will be used to place Type V cement in the open core hole from the bottom of the core hole to the top of the core hole. Cement retainers, as described above, will be used to force cement grout into the annulus and behind perforated intervals, as necessary.

If the hole has been obstructed, as much cement as possible will be placed from 100 feet below the LBFU-bedrock contact to the top of the core hole.

The volume of Type V cement will be recorded and will not be less than the estimated volume of material required to fill each interval. All cement grout will consist of Type V cement, or equivalent approved in accordance with the UIC Permit.

Certification

I certify under the penalty of law that I have personally examined and am familiar with the information submitted in this document and all attachments and that, based on my inquiry of those individuals immediately responsible for obtaining the information, I believe that the information is true, accurate, and complete. I am aware that there are significant penalties for submitting false information, including the possibliity of fine and imprisonment. (Ref. 40 CFR § 144.32)

Name and Official Title *(Please type or print)*	Signature	Date Signed
Dan Johnson, VP - General Manager		10/3/2019

INSTRUCTIONS FOR FORM 7520-19

This form replaces forms 7520-12 and 7520-14. Use this form only when work is planned or has occurred that affects the well's construction or operation as an injection well, including work on the casing, tubing or packer (or for shallow Class V wells, the subsurface fluid emplacement network). Use one form per injection well. While reports or other information developed by contractors or service companies may be attached, this form must be signed by a responsible entity as described at 40 CFR 144.32. Note: operators closing Class V wells should use Form 7520-17.

NAME, ADDRESS, PHONE AND/OR EMAIL OF PERMITTEE: Enter the name and street address, city/town, state, and ZIP code of the permittee. Also provide an email address (if available) and/or a phone number.

PERMIT OR EPA ID NUMBER: Enter the well identification number or permit number assigned to the well by the EPA or the permitting authority.

API NUMBER: Enter the number assigned by the local jurisdiction (usually a State Oil and Gas Agency) using the American Petroleum Institute standard numbering system.

FULL WELL NAME: Enter the full name of the well or project.

Enter the **STATE** and **COUNTY** where the well is located. For States that do not have counties, use the name of that State's equivalent jurisdiction at a more local level.

WELL LOCATION: Fill in the complete township, range, and section to the nearest quarter-quarter section. A township is north or south of the baseline, and a range is east or west of the principal meridian (e.g., T12N, R34W). Also include the distance, in feet, from the nearest north or south line and nearest east or west line of the quarter-section. Also, enter the **latitude** and **longitude** of the well in decimal degrees, to five or six places if possible; be sure to include a negative sign for the longitude of a well in the Western Hemisphere and a negative sign for the latitude of a well in the Southern Hemisphere.

Enter the **WELL CLASS,** i.e., the class of injection well as defined in 40 CFR 144.6.

TIMING OF THE ACTION: Check ***Notice prior to work*** if the activity has not yet occurred (i.e., is planned). Check ***Report after work*** if the activity described has already occurred. As appropriate, include the date the activity is expected to start or the date the activity was completed. (Note this may not be available, e.g., for a plugging plan submitted with a permit application.)

TYPE OF ACTION: Check the appropriate box to describe the kind of activity being reported. Check ***Well Rework*** for work that was/will be performed on the well after it has already been in operation as an injection well. Check ***Plugging and Abandonment*** to report on plans for or descriptions of final closure/plugging after use as an injection well. Check ***Conversion to a Non-Injection Well*** if the well is to be converted to something other than an injection well.

Provide a **NARRATIVE DESCRIPTION** of the work planned to be performed, or that was performed. The narrative should include a description of the main procedures planned or that occurred during the work activity. A service company report, daily report, or similar document may be attached if it includes all the requested information and is clear and legible.

For well reworks, include the following information: The reason for the well rework; depths of activity; type of activity; changes to injection well configuration, well casing, or cement behind casing; any plug added to the well and its depth; any newly drilled interval and its depth; method(s) to demonstrate that the well has mechanical integrity (as applicable); and any deviations from the approved rework plan (as applicable).

For a well plugging plan, include the following information: Reason for the well plugging; number of plugs placed, and their depths; materials used as plugs (e.g., cast iron bridge plug, cement, cement retainer); method to set plugs; and wait-on-cement times, if any. Also provide one or more cost estimates from an independent firm in the business of plugging and abandoning wells to plug the well as described in the plan.

For well plugging affidavit, include the following information: Reason for the well plugging; number of plugs placed, and their depths; materials used as plugs (e.g., cast iron bridge plug, cement, cement retainer); method to set plugs; wait-on-cement times, if any; and any deviations from the approved plugging plan (if applicable).

For conversion to a non-injection well, include the following information: Depths of activity; type of activity; changes to injection well configuration, well casing, or cement behind casing; any plug added to the well and its depth; any newly drilled interval and its depth; depths of new perforations; and method(s) to demonstrate that the well has mechanical integrity (as applicable).

For all of the above activities, include a well sketch depicting the work, results of well tests/logging performed, service company tickets, and any other available information demonstrating how the work was/is to be performed. Also, specify whether depths are below ground surface, relative to Kelly bushing, etc.

CERTIFICATION: This form must be signed and dated by either: a responsible corporate officer for a corporation, by a general partner for a partnership, by the proprietor of a sole proprietorship, or by a principal executive or ranking elected official for a public agency.

PAPERWORK REDUCTION ACT NOTICE: The public reporting and recordkeeping burden for this collection of information is estimated to average between 6.0 and 7.9 hours per response, depending on the injection well class. Burden means the total time, effort, or financial resource expended by persons to generate, maintain, retain, or disclose or provide information to or for a Federal Agency. This includes the time needed to review instructions; develop, acquire, install, and utilize technology and systems for the purposes of collecting, validating, and verifying information, processing and maintaining information, and disclosing and providing information; adjust the existing ways to comply with any previously applicable instructions and requirements; train personnel to be able to respond to the collection of information; search data sources; complete and review the collection of information; and, transmit or otherwise disclose the information. An agency may not conduct or sponsor, and a person is not required to respond to, a collection of information unless it displays a currently valid OMB control number. Send comments on the Agency's need for this information, the accuracy of the provided burden estimates, and any suggested methods for minimizing respondent burden, including the use of automated collection techniques to Director, Collection Strategies Division, U.S. Environmental Protection Agency (2822), 1200 Pennsylvania Ave., NW., Washington, D.C. 20460. Include the OMB control number in any correspondence. Do not send the completed forms to this address.

AS-BUILT COREHOLE 144

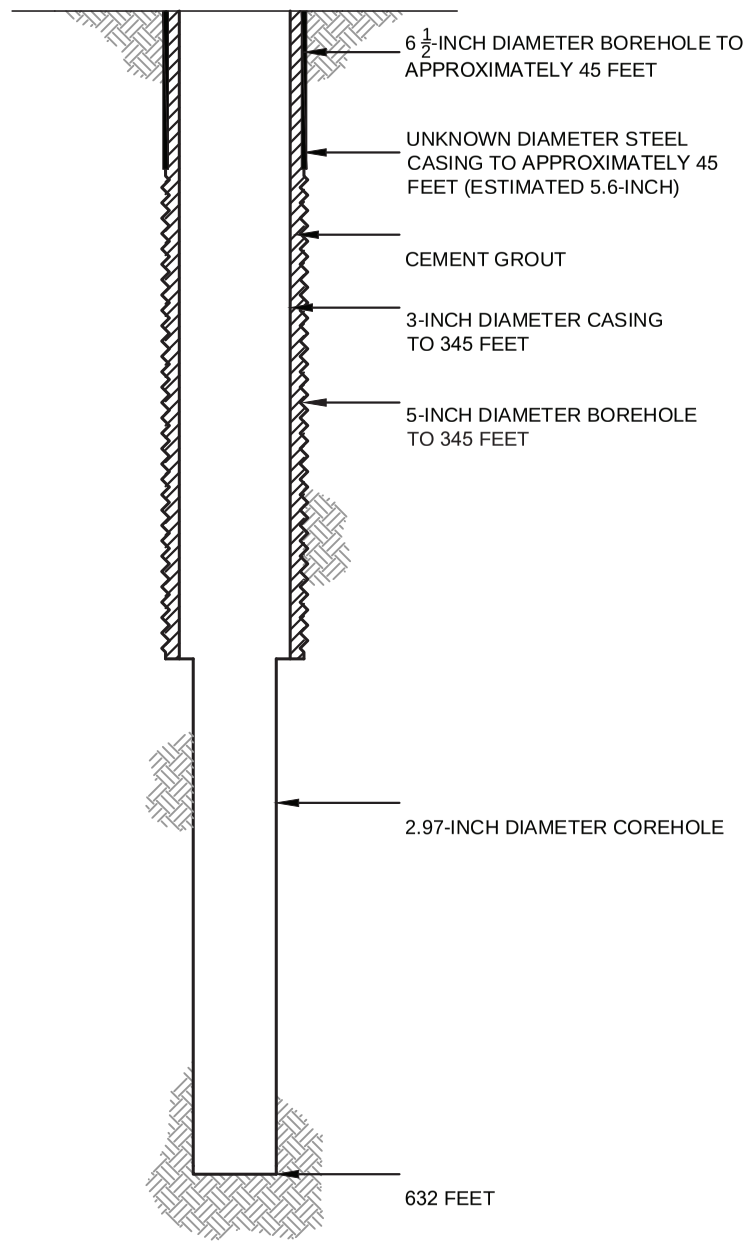

PROPOSED PLUGGING AND ABANDONMENT COREHOLE 144

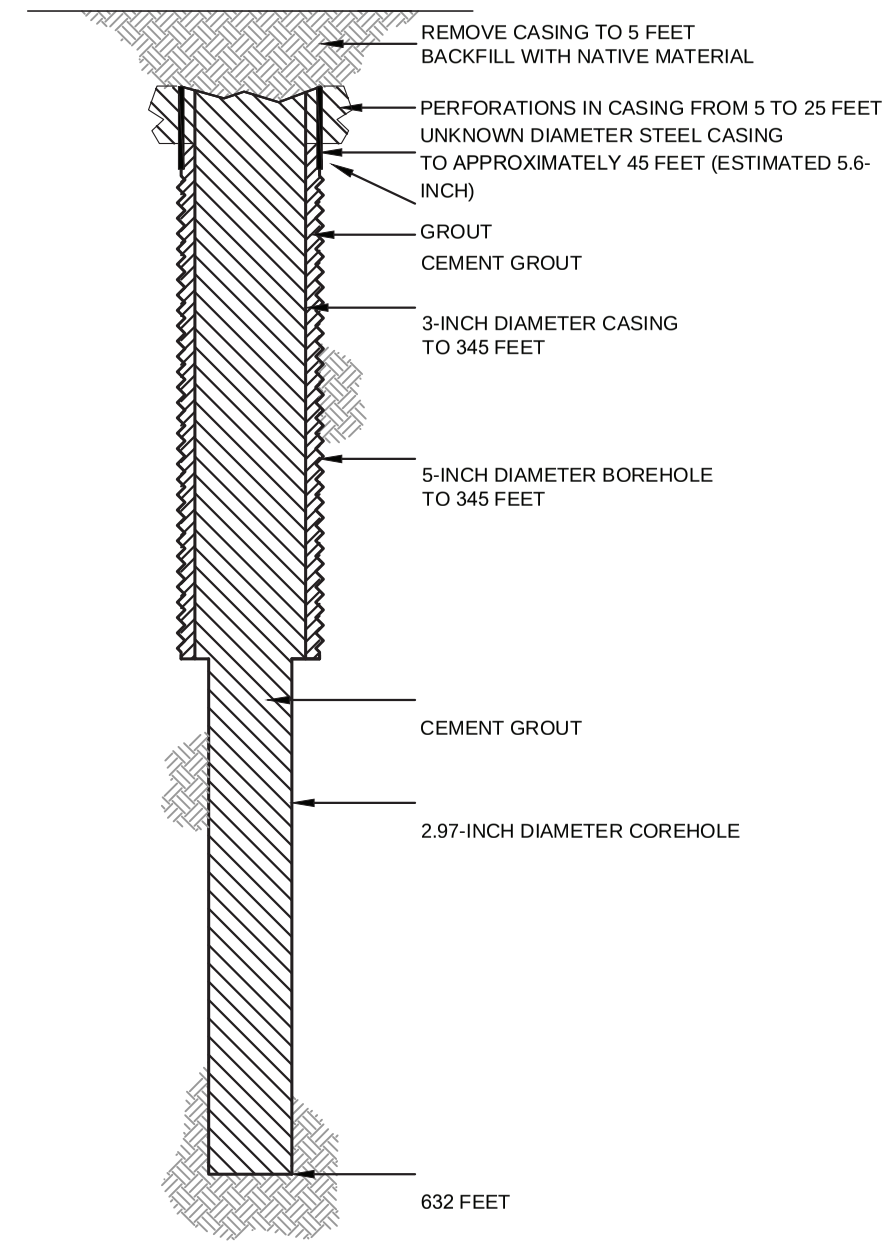

HALEY ALDRICH

FLORENCE COPPER, INC.
FLORENCE, ARIZONA

COREHOLE 144 DIAGRAM

FLORENCE COPPER INC.

NOT TO SCALE
SEPTEMBER 2019

FIGURE 1

MOBINI, GITA Printed: 4/21/2017 12:00 PM Layout: ABANDON (2)
G:\PROJECTS\CURIS RESOURCES\38706-CURIS FEASIBILITY\DRAWINGS\EPA\WELL ABANDON\415S_ABANDON.DWG

OMB No. 2040-0042 Approval Expires 4/30/2022

United States Environmental Protection Agency

EPA

WELL REWORK RECORD, PLUGGING AND ABANDONMENT PLAN, OR PLUGGING AND ABANDONMENT AFFIDAVIT

Name and Address, Phone Number and/or Email of Permittee

Florence Copper Project
1575 W Hunt Hwy,
Florence, AZ 85132

Permit or EPA ID Number	API Number	Full Well Name
R9UIC-AZ3-FY11-1		146MF

State	County
Arizona	Pinal

Locate well in two directions from nearest lines of quarter section and drilling unit

Surface Location

SE 1/4 of SE 1/4 of Section 28 Township 4S Range 9E

Latitude 33.04750592

Longitude -111.4240583

ft. from (N/S) Line of quarter section

ft. from (E/W) Line of quarter section.

Well Class	Timing of Action (pick one)	Type of Action (pick one)
☐ Class I ☐ Class II ☑ Class III ☐ Class V	☑ Notice Prior to Work Date Expected to Commence March 2021 ☐ Report After Work Date Work Ended	☐ Well Rework ☑ Plugging and Abandonment ☐ Conversion to a Non-Injection Well

Provide a narrative description of the work planned to be performed, or that was performed. Use additional pages as necessary. See instructions.

A workover rig capable of performing the required abandonment operations at the required depths will be moved in and set up over the core hole. The core hole will be inspected to determine the depth to which the hole remains open and if any obstructions are present in the core hole; the presence and condition of any existing collar will also be documented. If necessary, the core hole will be cleaned out to a depth of at least 100 feet below the bedrock-LBFU contact to enable placement of cement seals.

If collar is present, an attempt will be made to remove it. If removal of the collar is not feasible, it will be left in the hole and perforated as needed to allow an annular seal to be placed to a depth of at least 25 feet bgs. In areas of agricultural use, the surface casing will be cut at least 5 feet bgs and removed.

If the collar cannot be removed, it will be perforated from at least 20 feet below the bedrock-LBFU contact to at least 20 feet above the contact; from at least 20 feet below the base of the MFGU to at least 20 feet above the top of the MFGU; and from at least 25 feet bgs to 5 feet bgs.

A tremie pipe will be used to place Type V cement in the open core hole from the bottom of the core hole to the top of the core hole. Cement retainers, as described above, will be used to force cement grout into the annulus and behind perforated intervals, as necessary.

If the hole has been obstructed, as much cement as possible will be placed from 100 feet below the LBFU-bedrock contact to the top of the core hole.

The volume of Type V cement will be recorded and will not be less than the estimated volume of material required to fill each interval. All cement grout will consist of Type V cement, or equivalent approved in accordance with the UIC Permit.

Certification

I certify under the penalty of law that I have personally examined and am familiar with the information submitted in this document and all attachments and that, based on my inquiry of those individuals immediately responsible for obtaining the information, I believe that the information is true, accurate, and complete. I am aware that there are significant penalties for submitting false information, including the possibliity of fine and imprisonment. (Ref. 40 CFR § 144.32)

Name and Official Title *(Please type or print)*	Signature	Date Signed
Dan Johnson, VP - General Manager		10/3/2019

INSTRUCTIONS FOR FORM 7520-19

This form replaces forms 7520-12 and 7520-14. Use this form only when work is planned or has occurred that affects the well's construction or operation as an injection well, including work on the casing, tubing or packer (or for shallow Class V wells, the subsurface fluid emplacement network). Use one form per injection well. While reports or other information developed by contractors or service companies may be attached, this form must be signed by a responsible entity as described at 40 CFR 144.32. Note: operators closing Class V wells should use Form 7520-17.

NAME, ADDRESS, PHONE AND/OR EMAIL OF PERMITTEE: Enter the name and street address, city/town, state, and ZIP code of the permittee. Also provide an email address (if available) and/or a phone number.

PERMIT OR EPA ID NUMBER: Enter the well identification number or permit number assigned to the well by the EPA or the permitting authority.

API NUMBER: Enter the number assigned by the local jurisdiction (usually a State Oil and Gas Agency) using the American Petroleum Institute standard numbering system.

FULL WELL NAME: Enter the full name of the well or project.

Enter the **STATE** and **COUNTY** where the well is located. For States that do not have counties, use the name of that State's equivalent jurisdiction at a more local level.

WELL LOCATION: Fill in the complete township, range, and section to the nearest quarter-quarter section. A township is north or south of the baseline, and a range is east or west of the principal meridian (e.g., T12N, R34W). Also include the distance, in feet, from the nearest north or south line and nearest east or west line of the quarter-section. Also, enter the **latitude** and **longitude** of the well in decimal degrees, to five or six places if possible; be sure to include a negative sign for the longitude of a well in the Western Hemisphere and a negative sign for the latitude of a well in the Southern Hemisphere.

Enter the **WELL CLASS,** i.e., the class of injection well as defined in 40 CFR 144.6.

TIMING OF THE ACTION: Check ***Notice prior to work*** if the activity has not yet occurred (i.e., is planned). Check ***Report after work*** if the activity described has already occurred. As appropriate, include the date the activity is expected to start or the date the activity was completed. (Note this may not be available, e.g., for a plugging plan submitted with a permit application.)

TYPE OF ACTION: Check the appropriate box to describe the kind of activity being reported. Check ***Well Rework*** for work that was/will be performed on the well after it has already been in operation as an injection well. Check ***Plugging and Abandonment*** to report on plans for or descriptions of final closure/plugging after use as an injection well. Check ***Conversion to a Non-Injection Well*** if the well is to be converted to something other than an injection well.

Provide a **NARRATIVE DESCRIPTION** of the work planned to be performed, or that was performed. The narrative should include a description of the main procedures planned or that occurred during the work activity. A service company report, daily report, or similar document may be attached if it includes all the requested information and is clear and legible.

For well reworks, include the following information: The reason for the well rework; depths of activity; type of activity; changes to injection well configuration, well casing, or cement behind casing; any plug added to the well and its depth; any newly drilled interval and its depth; method(s) to demonstrate that the well has mechanical integrity (as applicable); and any deviations from the approved rework plan (as applicable).

For a well plugging plan, include the following information: Reason for the well plugging; number of plugs placed, and their depths; materials used as plugs (e.g., cast iron bridge plug, cement, cement retainer); method to set plugs; and wait-on-cement times, if any. Also provide one or more cost estimates from an independent firm in the business of plugging and abandoning wells to plug the well as described in the plan.

For well plugging affidavit, include the following information: Reason for the well plugging; number of plugs placed, and their depths; materials used as plugs (e.g., cast iron bridge plug, cement, cement retainer); method to set plugs; wait-on-cement times, if any; and any deviations from the approved plugging plan (if applicable).

For conversion to a non-injection well, include the following information: Depths of activity; type of activity; changes to injection well configuration, well casing, or cement behind casing; any plug added to the well and its depth; any newly drilled interval and its depth; depths of new perforations; and method(s) to demonstrate that the well has mechanical integrity (as applicable).

For all of the above activities, include a well sketch depicting the work, results of well tests/logging performed, service company tickets, and any other available information demonstrating how the work was/is to be performed. Also, specify whether depths are below ground surface, relative to Kelly bushing, etc.

CERTIFICATION: This form must be signed and dated by either: a responsible corporate officer for a corporation, by a general partner for a partnership, by the proprietor of a sole proprietorship, or by a principal executive or ranking elected official for a public agency.

PAPERWORK REDUCTION ACT NOTICE: The public reporting and recordkeeping burden for this collection of information is estimated to average between 6.0 and 7.9 hours per response, depending on the injection well class. Burden means the total time, effort, or financial resource expended by persons to generate, maintain, retain, or disclose or provide information to or for a Federal Agency. This includes the time needed to review instructions; develop, acquire, install, and utilize technology and systems for the purposes of collecting, validating, and verifying information, processing and maintaining information, and disclosing and providing information; adjust the existing ways to comply with any previously applicable instructions and requirements; train personnel to be able to respond to the collection of information; search data sources; complete and review the collection of information; and, transmit or otherwise disclose the information. An agency may not conduct or sponsor, and a person is not required to respond to, a collection of information unless it displays a currently valid OMB control number. Send comments on the Agency's need for this information, the accuracy of the provided burden estimates, and any suggested methods for minimizing respondent burden, including the use of automated collection techniques to Director, Collection Strategies Division, U.S. Environmental Protection Agency (2822), 1200 Pennsylvania Ave., NW., Washington, D.C. 20460. Include the OMB control number in any correspondence. Do not send the completed forms to this address.

AS-BUILT COREHOLE 146MF

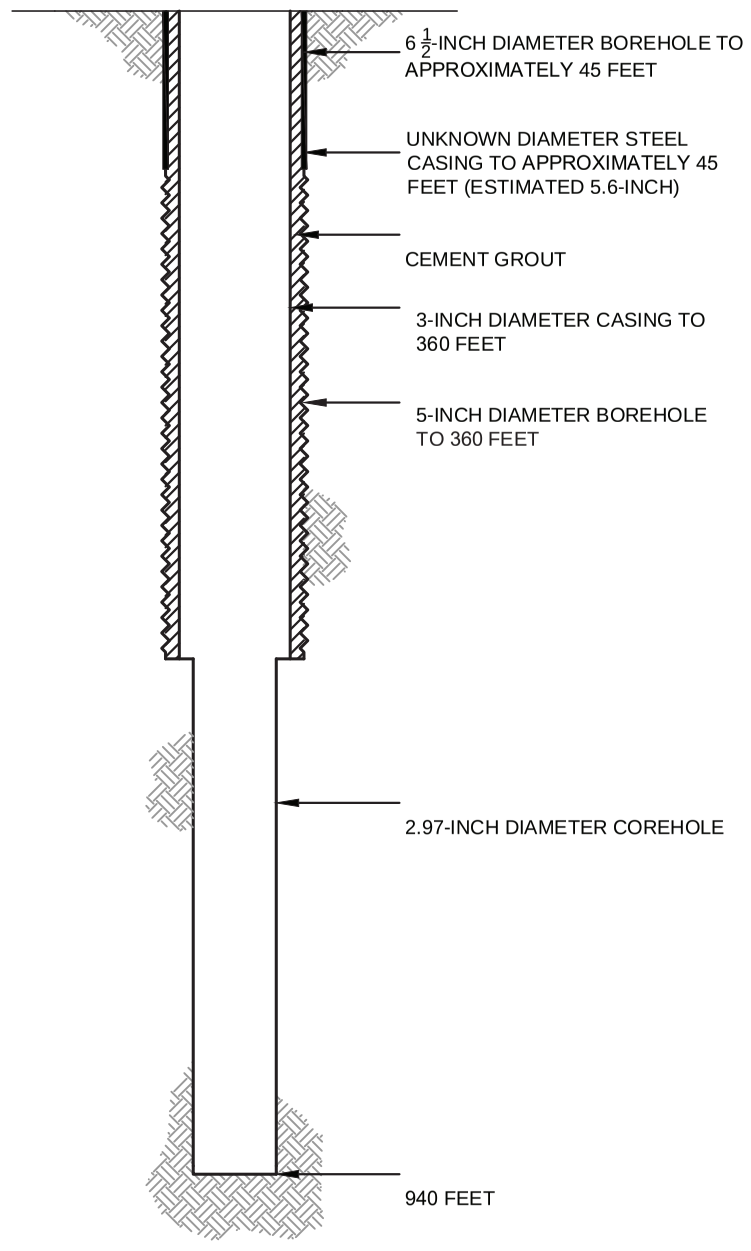

PROPOSED PLUGGING AND ABANDONMENT COREHOLE 146MF

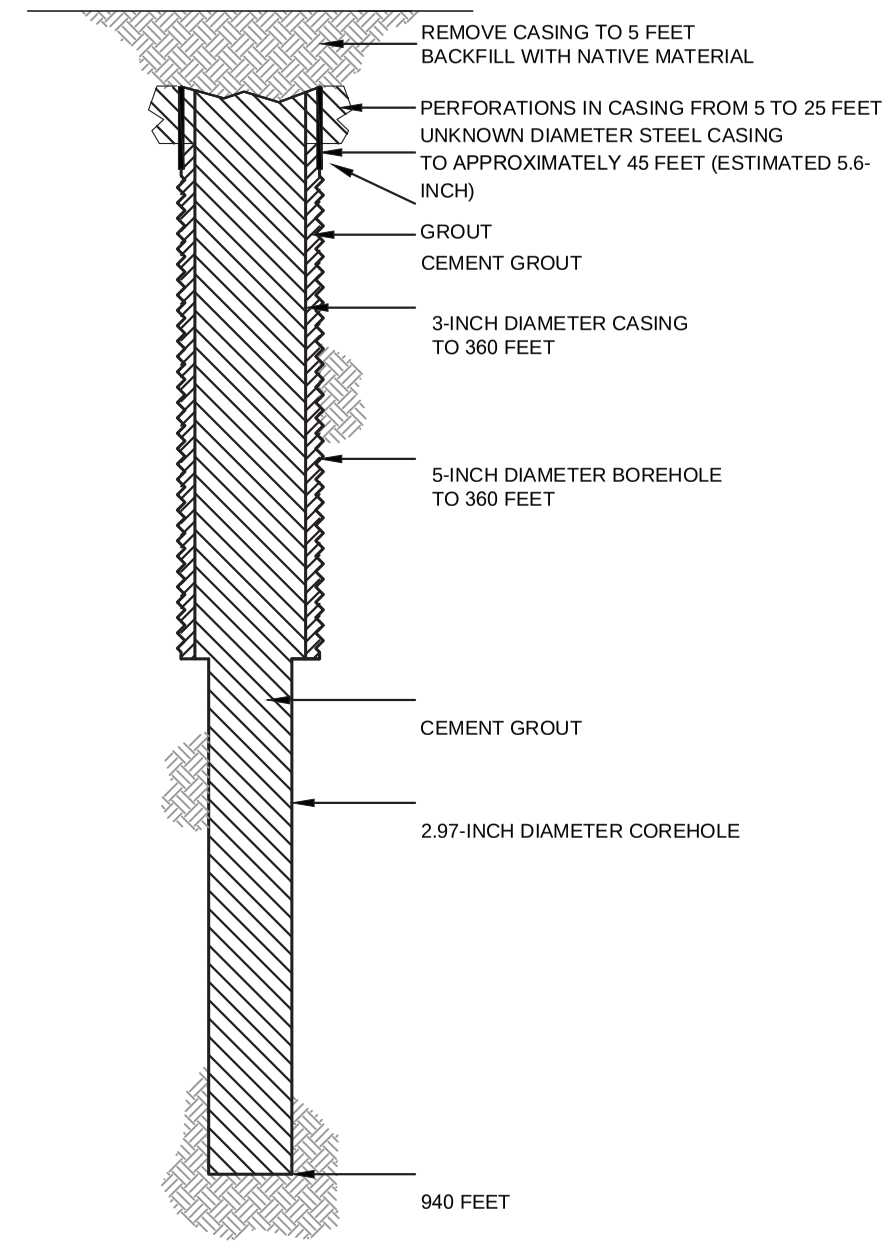

HALEY ALDRICH

FLORENCE COPPER, INC.
FLORENCE, ARIZONA

COREHOLE 146MF DIAGRAM

FLORENCE COPPER INC.

NOT TO SCALE
SEPTEMBER 2019

FIGURE 1

MOBINI, GITA Printed: 4/21/2017 12:00 PM Layout: ABANDON (2)
G:\PROJECTS\CURIS RESOURCES\38706-CURIS FEASIBILITY\DRAWINGS\EPA\WELL ABANDON\415S_ABANDON.DWG

OMB No. 2040-0042 Approval Expires 4/30/2022

United States Environmental Protection Agency

EPA

WELL REWORK RECORD, PLUGGING AND ABANDONMENT PLAN, OR PLUGGING AND ABANDONMENT AFFIDAVIT

Name and Address, Phone Number and/or Email of Permittee

Florence Copper Project
1575 W Hunt Hwy,
Florence, AZ 85132

Permit or EPA ID Number	API Number	Full Well Name
R9UIC-AZ3-FY11-1		147MF

State	County
Arizona	Pinal

Locate well in two directions from nearest lines of quarter section and drilling unit

Surface Location

NW 1/4 of NE 1/4 of Section 33 Township 4S Range 9E

Latitude 33.04495925

Longitude -111.4257126

_____ ft. from (N/S) _____ Line of quarter section

_____ ft. from (E/W) _____ Line of quarter section.

Well Class	Timing of Action (pick one)	Type of Action (pick one)
☐ Class I ☐ Class II ☑ Class III ☐ Class V	☑ Notice Prior to Work Date Expected to Commence March 2021 ☐ Report After Work Date Work Ended	☐ Well Rework ☑ Plugging and Abandonment ☐ Conversion to a Non-Injection Well

Provide a narrative description of the work planned to be performed, or that was performed. Use additional pages as necessary. See instructions.

A workover rig capable of performing the required abandonment operations at the required depths will be moved in and set up over the core hole. The core hole will be inspected to determine the depth to which the hole remains open and if any obstructions are present in the core hole; the presence and condition of any existing collar will also be documented. If necessary, the core hole will be cleaned out to a depth of at least 100 feet below the bedrock-LBFU contact to enable placement of cement seals.

If collar is present, an attempt will be made to remove it. If removal of the collar is not feasible, it will be left in the hole and perforated as needed to allow an annular seal to be placed to a depth of at least 25 feet bgs. In areas of agricultural use, the surface casing will be cut at least 5 feet bgs and removed.

If the collar cannot be removed, it will be perforated from at least 20 feet below the bedrock-LBFU contact to at least 20 feet above the contact; from at least 20 feet below the base of the MFGU to at least 20 feet above the top of the MFGU; and from at least 25 feet bgs to 5 feet bgs.

A tremie pipe will be used to place Type V cement in the open core hole from the bottom of the core hole to the top of the core hole. Cement retainers, as described above, will be used to force cement grout into the annulus and behind perforated intervals, as necessary.

If the hole has been obstructed, as much cement as possible will be placed from 100 feet below the LBFU-bedrock contact to the top of the core hole.

The volume of Type V cement will be recorded and will not be less than the estimated volume of material required to fill each interval. All cement grout will consist of Type V cement, or equivalent approved in accordance with the UIC Permit.

Certification

I certify under the penalty of law that I have personally examined and am familiar with the information submitted in this document and all attachments and that, based on my inquiry of those individuals immediately responsible for obtaining the information, I believe that the information is true, accurate, and complete. I am aware that there are significant penalties for submitting false information, including the possibliity of fine and imprisonment. (Ref. 40 CFR § 144.32)

Name and Official Title *(Please type or print)*	Signature	Date Signed
Dan Johnson, VP - General Manager		10/3/2019

INSTRUCTIONS FOR FORM 7520-19

This form replaces forms 7520-12 and 7520-14. Use this form only when work is planned or has occurred that affects the well's construction or operation as an injection well, including work on the casing, tubing or packer (or for shallow Class V wells, the subsurface fluid emplacement network). Use one form per injection well. While reports or other information developed by contractors or service companies may be attached, this form must be signed by a responsible entity as described at 40 CFR 144.32. Note: operators closing Class V wells should use Form 7520-17.

NAME, ADDRESS, PHONE AND/OR EMAIL OF PERMITTEE: Enter the name and street address, city/town, state, and ZIP code of the permittee. Also provide an email address (if available) and/or a phone number.

PERMIT OR EPA ID NUMBER: Enter the well identification number or permit number assigned to the well by the EPA or the permitting authority.

API NUMBER: Enter the number assigned by the local jurisdiction (usually a State Oil and Gas Agency) using the American Petroleum Institute standard numbering system.

FULL WELL NAME: Enter the full name of the well or project.

Enter the **STATE** and **COUNTY** where the well is located. For States that do not have counties, use the name of that State's equivalent jurisdiction at a more local level.

WELL LOCATION: Fill in the complete township, range, and section to the nearest quarter-quarter section. A township is north or south of the baseline, and a range is east or west of the principal meridian (e.g., T12N, R34W). Also include the distance, in feet, from the nearest north or south line and nearest east or west line of the quarter-section. Also, enter the **latitude** and **longitude** of the well in decimal degrees, to five or six places if possible; be sure to include a negative sign for the longitude of a well in the Western Hemisphere and a negative sign for the latitude of a well in the Southern Hemisphere.

Enter the **WELL CLASS,** i.e., the class of injection well as defined in 40 CFR 144.6.

TIMING OF THE ACTION: Check ***Notice prior to work*** if the activity has not yet occurred (i.e., is planned). Check ***Report after work*** if the activity described has already occurred. As appropriate, include the date the activity is expected to start or the date the activity was completed. (Note this may not be available, e.g., for a plugging plan submitted with a permit application.)

TYPE OF ACTION: Check the appropriate box to describe the kind of activity being reported. Check ***Well Rework*** for work that was/will be performed on the well after it has already been in operation as an injection well. Check ***Plugging and Abandonment*** to report on plans for or descriptions of final closure/plugging after use as an injection well. Check ***Conversion to a Non-Injection Well*** if the well is to be converted to something other than an injection well.

Provide a **NARRATIVE DESCRIPTION** of the work planned to be performed, or that was performed. The narrative should include a description of the main procedures planned or that occurred during the work activity. A service company report, daily report, or similar document may be attached if it includes all the requested information and is clear and legible.

For well reworks, include the following information: The reason for the well rework; depths of activity; type of activity; changes to injection well configuration, well casing, or cement behind casing; any plug added to the well and its depth; any newly drilled interval and its depth; method(s) to demonstrate that the well has mechanical integrity (as applicable); and any deviations from the approved rework plan (as applicable).

For a well plugging plan, include the following information: Reason for the well plugging; number of plugs placed, and their depths; materials used as plugs (e.g., cast iron bridge plug, cement, cement retainer); method to set plugs; and wait-on-cement times, if any. Also provide one or more cost estimates from an independent firm in the business of plugging and abandoning wells to plug the well as described in the plan.

For well plugging affidavit, include the following information: Reason for the well plugging; number of plugs placed, and their depths; materials used as plugs (e.g., cast iron bridge plug, cement, cement retainer); method to set plugs; wait-on-cement times, if any; and any deviations from the approved plugging plan (if applicable).

For conversion to a non-injection well, include the following information: Depths of activity; type of activity; changes to injection well configuration, well casing, or cement behind casing; any plug added to the well and its depth; any newly drilled interval and its depth; depths of new perforations; and method(s) to demonstrate that the well has mechanical integrity (as applicable).

For all of the above activities, include a well sketch depicting the work, results of well tests/logging performed, service company tickets, and any other available information demonstrating how the work was/is to be performed. Also, specify whether depths are below ground surface, relative to Kelly bushing, etc.

CERTIFICATION: This form must be signed and dated by either: a responsible corporate officer for a corporation, by a general partner for a partnership, by the proprietor of a sole proprietorship, or by a principal executive or ranking elected official for a public agency.

PAPERWORK REDUCTION ACT NOTICE: The public reporting and recordkeeping burden for this collection of information is estimated to average between 6.0 and 7.9 hours per response, depending on the injection well class. Burden means the total time, effort, or financial resource expended by persons to generate, maintain, retain, or disclose or provide information to or for a Federal Agency. This includes the time needed to review instructions; develop, acquire, install, and utilize technology and systems for the purposes of collecting, validating, and verifying information, processing and maintaining information, and disclosing and providing information; adjust the existing ways to comply with any previously applicable instructions and requirements; train personnel to be able to respond to the collection of information; search data sources; complete and review the collection of information; and, transmit or otherwise disclose the information. An agency may not conduct or sponsor, and a person is not required to respond to, a collection of information unless it displays a currently valid OMB control number. Send comments on the Agency's need for this information, the accuracy of the provided burden estimates, and any suggested methods for minimizing respondent burden, including the use of automated collection techniques to Director, Collection Strategies Division, U.S. Environmental Protection Agency (2822), 1200 Pennsylvania Ave., NW., Washington, D.C. 20460. Include the OMB control number in any correspondence. Do not send the completed forms to this address.

AS-BUILT COREHOLE 147MF

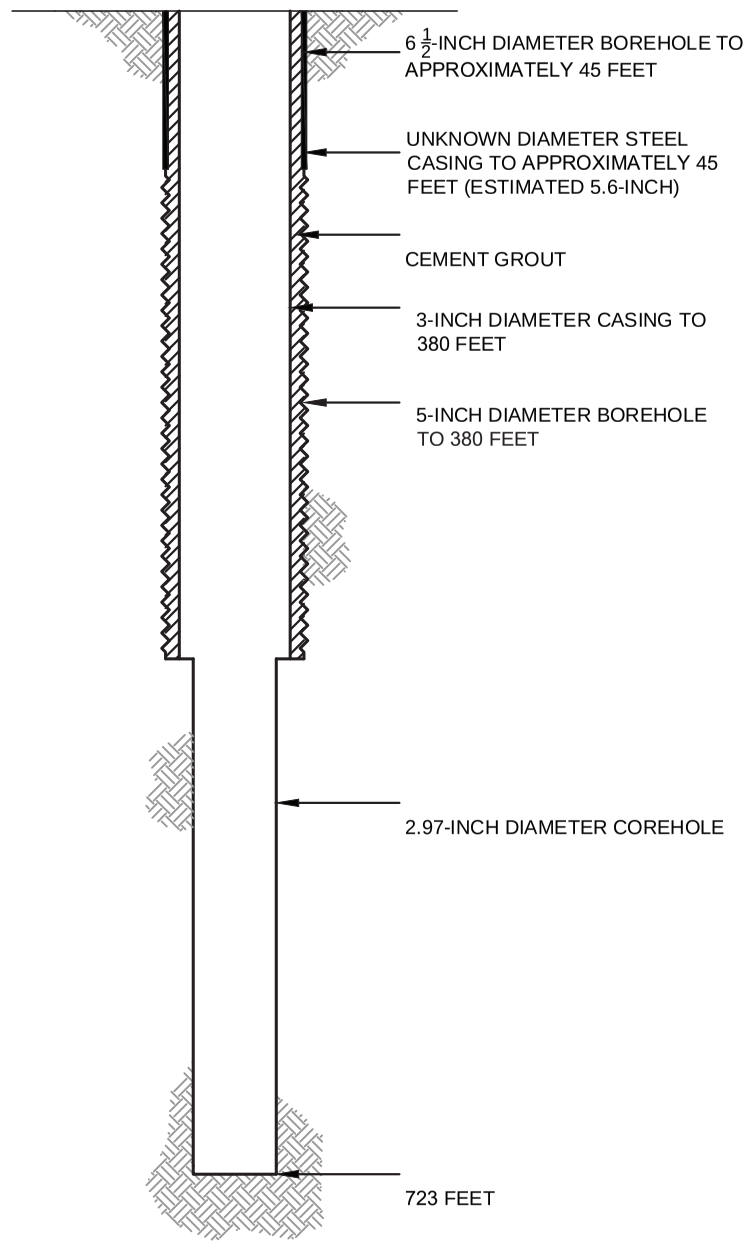

PROPOSED PLUGGING AND ABANDONMENT COREHOLE 147MF

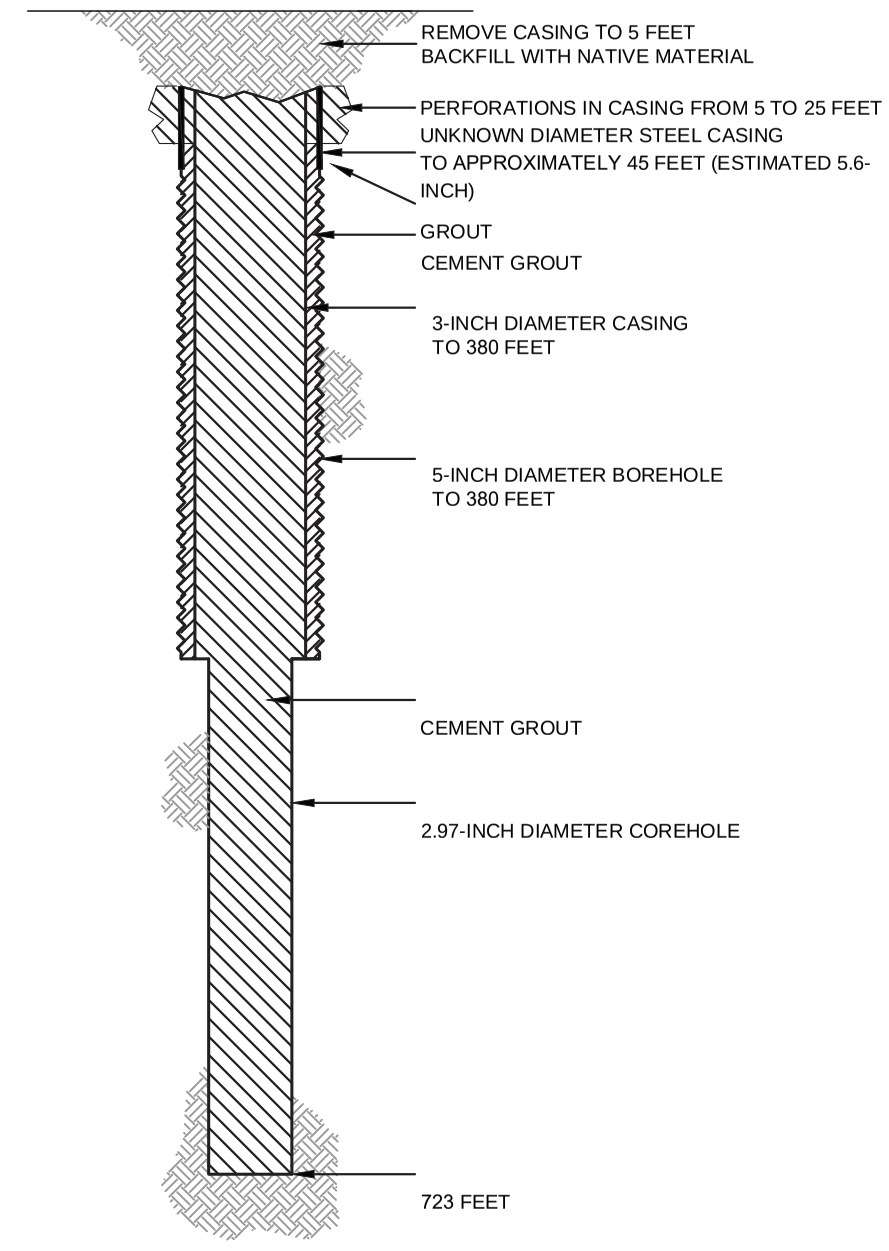

HALEY ALDRICH

FLORENCE COPPER, INC.
FLORENCE, ARIZONA

COREHOLE 147MF DIAGRAM

FLORENCE COPPER INC.

NOT TO SCALE
SEPTEMBER 2019

FIGURE 1

MOBINI, GITA Printed: 4/21/2017 12:00 PM Layout: ABANDON (2)
G:\PROJECTS\CURIS RESOURCES\38706-CURIS FEASIBILITY\DRAWINGS\EPA\WELL ABANDON\415S_ABANDON.DWG

OMB No. 2040-0042 Approval Expires 4/30/2022

United States Environmental Protection Agency

WELL REWORK RECORD, PLUGGING AND ABANDONMENT PLAN, OR PLUGGING AND ABANDONMENT AFFIDAVIT

Name and Address, Phone Number and/or Email of Permittee

Florence Copper Project
1575 W Hunt Hwy,
Florence, AZ 85132

Permit or EPA ID Number	API Number	Full Well Name
R9UIC-AZ3-FY11-1		148MF

State	County
Arizona	Pinal

Locate well in two directions from nearest lines of quarter section and drilling unit

Surface Location

NW 1/4 of NE 1/4 of Section 33 Township 4S Range 9E

Latitude 33.0437866

Longitude -111.4281389

_____ ft. from (N/S) _____ Line of quarter section

_____ ft. from (E/W) _____ Line of quarter section.

Well Class	Timing of Action (pick one)	Type of Action (pick one)
☐ Class I ☐ Class II ☑ Class III ☐ Class V	☑ Notice Prior to Work Date Expected to Commence March 2021 ☐ Report After Work Date Work Ended	☐ Well Rework ☑ Plugging and Abandonment ☐ Conversion to a Non-Injection Well

Provide a narrative description of the work planned to be performed, or that was performed. Use additional pages as necessary. See instructions.

A workover rig capable of performing the required abandonment operations at the required depths will be moved in and set up over the core hole. The core hole will be inspected to determine the depth to which the hole remains open and if any obstructions are present in the core hole; the presence and condition of any existing collar will also be documented. If necessary, the core hole will be cleaned out to a depth of at least 100 feet below the bedrock-LBFU contact to enable placement of cement seals.

If collar is present, an attempt will be made to remove it. If removal of the collar is not feasible, it will be left in the hole and perforated as needed to allow an annular seal to be placed to a depth of at least 25 feet bgs. In areas of agricultural use, the surface casing will be cut at least 5 feet bgs and removed.

If the collar cannot be removed, it will be perforated from at least 20 feet below the bedrock-LBFU contact to at least 20 feet above the contact; from at least 20 feet below the base of the MFGU to at least 20 feet above the top of the MFGU; and from at least 25 feet bgs to 5 feet bgs.

A tremie pipe will be used to place Type V cement in the open core hole from the bottom of the core hole to the top of the core hole. Cement retainers, as described above, will be used to force cement grout into the annulus and behind perforated intervals, as necessary.

If the hole has been obstructed, as much cement as possible will be placed from 100 feet below the LBFU-bedrock contact to the top of the core hole.

The volume of Type V cement will be recorded and will not be less than the estimated volume of material required to fill each interval. All cement grout will consist of Type V cement, or equivalent approved in accordance with the UIC Permit.

Certification

I certify under the penalty of law that I have personally examined and am familiar with the information submitted in this document and all attachments and that, based on my inquiry of those individuals immediately responsible for obtaining the information, I believe that the information is true, accurate, and complete. I am aware that there are significant penalties for submitting false information, including the possibliity of fine and imprisonment. (Ref. 40 CFR § 144.32)

Name and Official Title *(Please type or print)*	Signature	Date Signed
Dan Johnson, VP - General Manager		10/3/2019

INSTRUCTIONS FOR FORM 7520-19

This form replaces forms 7520-12 and 7520-14. Use this form only when work is planned or has occurred that affects the well's construction or operation as an injection well, including work on the casing, tubing or packer (or for shallow Class V wells, the subsurface fluid emplacement network). Use one form per injection well. While reports or other information developed by contractors or service companies may be attached, this form must be signed by a responsible entity as described at 40 CFR 144.32. Note: operators closing Class V wells should use Form 7520-17.

NAME, ADDRESS, PHONE AND/OR EMAIL OF PERMITTEE: Enter the name and street address, city/town, state, and ZIP code of the permittee. Also provide an email address (if available) and/or a phone number.

PERMIT OR EPA ID NUMBER: Enter the well identification number or permit number assigned to the well by the EPA or the permitting authority.

API NUMBER: Enter the number assigned by the local jurisdiction (usually a State Oil and Gas Agency) using the American Petroleum Institute standard numbering system.

FULL WELL NAME: Enter the full name of the well or project.

Enter the **STATE** and **COUNTY** where the well is located. For States that do not have counties, use the name of that State's equivalent jurisdiction at a more local level.

WELL LOCATION: Fill in the complete township, range, and section to the nearest quarter-quarter section. A township is north or south of the baseline, and a range is east or west of the principal meridian (e.g., T12N, R34W). Also include the distance, in feet, from the nearest north or south line and nearest east or west line of the quarter-section. Also, enter the **latitude** and **longitude** of the well in decimal degrees, to five or six places if possible; be sure to include a negative sign for the longitude of a well in the Western Hemisphere and a negative sign for the latitude of a well in the Southern Hemisphere.

Enter the **WELL CLASS,** i.e., the class of injection well as defined in 40 CFR 144.6.

TIMING OF THE ACTION: Check ***Notice prior to work*** if the activity has not yet occurred (i.e., is planned). Check ***Report after work*** if the activity described has already occurred. As appropriate, include the date the activity is expected to start or the date the activity was completed. (Note this may not be available, e.g., for a plugging plan submitted with a permit application.)

TYPE OF ACTION: Check the appropriate box to describe the kind of activity being reported. Check ***Well Rework*** for work that was/will be performed on the well after it has already been in operation as an injection well. Check ***Plugging and Abandonment*** to report on plans for or descriptions of final closure/plugging after use as an injection well. Check ***Conversion to a Non-Injection Well*** if the well is to be converted to something other than an injection well.

Provide a **NARRATIVE DESCRIPTION** of the work planned to be performed, or that was performed. The narrative should include a description of the main procedures planned or that occurred during the work activity. A service company report, daily report, or similar document may be attached if it includes all the requested information and is clear and legible.

For well reworks, include the following information: The reason for the well rework; depths of activity; type of activity; changes to injection well configuration, well casing, or cement behind casing; any plug added to the well and its depth; any newly drilled interval and its depth; method(s) to demonstrate that the well has mechanical integrity (as applicable); and any deviations from the approved rework plan (as applicable).

For a well plugging plan, include the following information: Reason for the well plugging; number of plugs placed, and their depths; materials used as plugs (e.g., cast iron bridge plug, cement, cement retainer); method to set plugs; and wait-on-cement times, if any. Also provide one or more cost estimates from an independent firm in the business of plugging and abandoning wells to plug the well as described in the plan.

For well plugging affidavit, include the following information: Reason for the well plugging; number of plugs placed, and their depths; materials used as plugs (e.g., cast iron bridge plug, cement, cement retainer); method to set plugs; wait-on-cement times, if any; and any deviations from the approved plugging plan (if applicable).

For conversion to a non-injection well, include the following information: Depths of activity; type of activity; changes to injection well configuration, well casing, or cement behind casing; any plug added to the well and its depth; any newly drilled interval and its depth; depths of new perforations; and method(s) to demonstrate that the well has mechanical integrity (as applicable).

For all of the above activities, include a well sketch depicting the work, results of well tests/logging performed, service company tickets, and any other available information demonstrating how the work was/is to be performed. Also, specify whether depths are below ground surface, relative to Kelly bushing, etc.

CERTIFICATION: This form must be signed and dated by either: a responsible corporate officer for a corporation, by a general partner for a partnership, by the proprietor of a sole proprietorship, or by a principal executive or ranking elected official for a public agency.

PAPERWORK REDUCTION ACT NOTICE: The public reporting and recordkeeping burden for this collection of information is estimated to average between 6.0 and 7.9 hours per response, depending on the injection well class. Burden means the total time, effort, or financial resource expended by persons to generate, maintain, retain, or disclose or provide information to or for a Federal Agency. This includes the time needed to review instructions; develop, acquire, install, and utilize technology and systems for the purposes of collecting, validating, and verifying information, processing and maintaining information, and disclosing and providing information; adjust the existing ways to comply with any previously applicable instructions and requirements; train personnel to be able to respond to the collection of information; search data sources; complete and review the collection of information; and, transmit or otherwise disclose the information. An agency may not conduct or sponsor, and a person is not required to respond to, a collection of information unless it displays a currently valid OMB control number. Send comments on the Agency's need for this information, the accuracy of the provided burden estimates, and any suggested methods for minimizing respondent burden, including the use of automated collection techniques to Director, Collection Strategies Division, U.S. Environmental Protection Agency (2822), 1200 Pennsylvania Ave., NW., Washington, D.C. 20460. Include the OMB control number in any correspondence. Do not send the completed forms to this address.

AS-BUILT COREHOLE 148MF

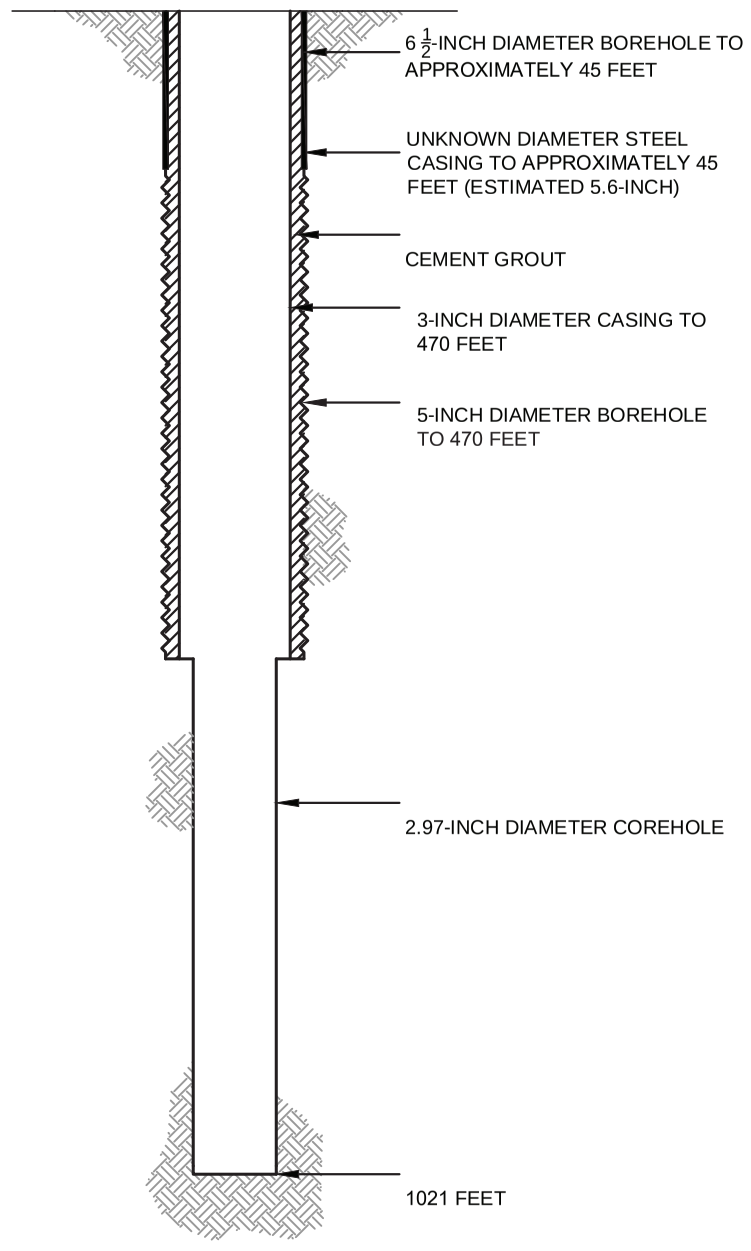

PROPOSED PLUGGING AND ABANDONMENT COREHOLE 148MF

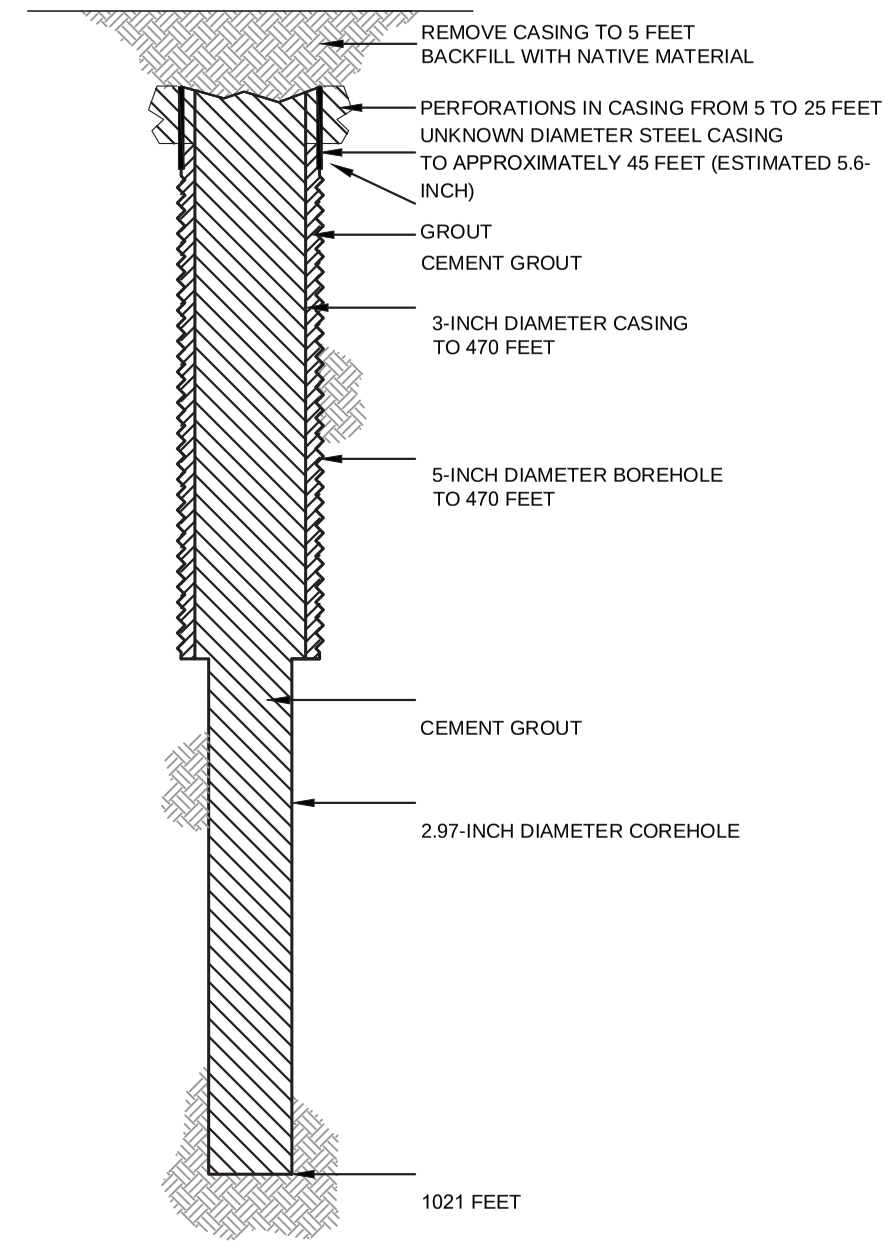

HALEY ALDRICH

FLORENCE COPPER, INC.
FLORENCE, ARIZONA

COREHOLE 148MF DIAGRAM

FLORENCE COPPER INC.

NOT TO SCALE
SEPTEMBER 2019

FIGURE 1

MOBINI, GITA Printed: 4/21/2017 12:00 PM Layout: ABANDON (2)
G:\PROJECTS\CURIS RESOURCES\38706-CURIS FEASIBILITY\DRAWINGS\EPA\WELL ABANDON\415S_ABANDON.DWG

OMB No. 2040-0042 Approval Expires 4/30/2022

United States Environmental Protection Agency

WELL REWORK RECORD, PLUGGING AND ABANDONMENT PLAN, OR PLUGGING AND ABANDONMENT AFFIDAVIT

Name and Address, Phone Number and/or Email of Permittee

Florence Copper Project
1575 W Hunt Hwy,
Florence, AZ 85132

Permit or EPA ID Number	API Number	Full Well Name
R9UIC-AZ3-FY11-1		150S

State	County
Arizona	Pinal

Locate well in two directions from nearest lines of quarter section and drilling unit

Surface Location

NW 1/4 of SW 1/4 of Section 28 Township 4S Range 9E

Latitude 33.05096195

Longitude -111.4363024

ft. from (N/S) Line of quarter section

ft. from (E/W) Line of quarter section.

Well Class	Timing of Action (pick one)	Type of Action (pick one)
☐ Class I ☐ Class II ☑ Class III ☐ Class V	☑ Notice Prior to Work Date Expected to Commence March 2021 ☐ Report After Work Date Work Ended	☐ Well Rework ☑ Plugging and Abandonment ☐ Conversion to a Non-Injection Well

Provide a narrative description of the work planned to be performed, or that was performed. Use additional pages as necessary. See instructions.

A workover rig capable of performing the required abandonment operations at the required depths will be moved in and set up over the core hole. The core hole will be inspected to determine the depth to which the hole remains open and if any obstructions are present in the core hole; the presence and condition of any existing collar will also be documented. If necessary, the core hole will be cleaned out to a depth of at least 100 feet below the bedrock-LBFU contact to enable placement of cement seals.

If collar is present, an attempt will be made to remove it. If removal of the collar is not feasible, it will be left in the hole and perforated as needed to allow an annular seal to be placed to a depth of at least 25 feet bgs. In areas of agricultural use, the surface casing will be cut at least 5 feet bgs and removed.

If the collar cannot be removed, it will be perforated from at least 20 feet below the bedrock-LBFU contact to at least 20 feet above the contact; from at least 20 feet below the base of the MFGU to at least 20 feet above the top of the MFGU; and from at least 25 feet bgs to 5 feet bgs.

A tremie pipe will be used to place Type V cement in the open core hole from the bottom of the core hole to the top of the core hole. Cement retainers, as described above, will be used to force cement grout into the annulus and behind perforated intervals, as necessary.

If the hole has been obstructed, as much cement as possible will be placed from 100 feet below the LBFU-bedrock contact to the top of the core hole.

The volume of Type V cement will be recorded and will not be less than the estimated volume of material required to fill each interval. All cement grout will consist of Type V cement, or equivalent approved in accordance with the UIC Permit.

Certification

I certify under the penalty of law that I have personally examined and am familiar with the information submitted in this document and all attachments and that, based on my inquiry of those individuals immediately responsible for obtaining the information, I believe that the information is true, accurate, and complete. I am aware that there are significant penalties for submitting false information, including the possibliity of fine and imprisonment. (Ref. 40 CFR § 144.32)

Name and Official Title *(Please type or print)*	Signature	Date Signed
Dan Johnson, VP - General Manager		10/3/2019

INSTRUCTIONS FOR FORM 7520-19

This form replaces forms 7520-12 and 7520-14. Use this form only when work is planned or has occurred that affects the well's construction or operation as an injection well, including work on the casing, tubing or packer (or for shallow Class V wells, the subsurface fluid emplacement network). Use one form per injection well. While reports or other information developed by contractors or service companies may be attached, this form must be signed by a responsible entity as described at 40 CFR 144.32. Note: operators closing Class V wells should use Form 7520-17.

NAME, ADDRESS, PHONE AND/OR EMAIL OF PERMITTEE: Enter the name and street address, city/town, state, and ZIP code of the permittee. Also provide an email address (if available) and/or a phone number.

PERMIT OR EPA ID NUMBER: Enter the well identification number or permit number assigned to the well by the EPA or the permitting authority.

API NUMBER: Enter the number assigned by the local jurisdiction (usually a State Oil and Gas Agency) using the American Petroleum Institute standard numbering system.

FULL WELL NAME: Enter the full name of the well or project.

Enter the **STATE** and **COUNTY** where the well is located. For States that do not have counties, use the name of that State's equivalent jurisdiction at a more local level.

WELL LOCATION: Fill in the complete township, range, and section to the nearest quarter-quarter section. A township is north or south of the baseline, and a range is east or west of the principal meridian (e.g., T12N, R34W). Also include the distance, in feet, from the nearest north or south line and nearest east or west line of the quarter-section. Also, enter the **latitude** and **longitude** of the well in decimal degrees, to five or six places if possible; be sure to include a negative sign for the longitude of a well in the Western Hemisphere and a negative sign for the latitude of a well in the Southern Hemisphere.

Enter the **WELL CLASS,** i.e., the class of injection well as defined in 40 CFR 144.6.

TIMING OF THE ACTION: Check ***Notice prior to work*** if the activity has not yet occurred (i.e., is planned). Check ***Report after work*** if the activity described has already occurred. As appropriate, include the date the activity is expected to start or the date the activity was completed. (Note this may not be available, e.g., for a plugging plan submitted with a permit application.)

TYPE OF ACTION: Check the appropriate box to describe the kind of activity being reported. Check ***Well Rework*** for work that was/will be performed on the well after it has already been in operation as an injection well. Check ***Plugging and Abandonment*** to report on plans for or descriptions of final closure/plugging after use as an injection well. Check ***Conversion to a Non-Injection Well*** if the well is to be converted to something other than an injection well.

Provide a **NARRATIVE DESCRIPTION** of the work planned to be performed, or that was performed. The narrative should include a description of the main procedures planned or that occurred during the work activity. A service company report, daily report, or similar document may be attached if it includes all the requested information and is clear and legible.

For well reworks, include the following information: The reason for the well rework; depths of activity; type of activity; changes to injection well configuration, well casing, or cement behind casing; any plug added to the well and its depth; any newly drilled interval and its depth; method(s) to demonstrate that the well has mechanical integrity (as applicable); and any deviations from the approved rework plan (as applicable).

For a well plugging plan, include the following information: Reason for the well plugging; number of plugs placed, and their depths; materials used as plugs (e.g., cast iron bridge plug, cement, cement retainer); method to set plugs; and wait-on-cement times, if any. Also provide one or more cost estimates from an independent firm in the business of plugging and abandoning wells to plug the well as described in the plan.

For well plugging affidavit, include the following information: Reason for the well plugging; number of plugs placed, and their depths; materials used as plugs (e.g., cast iron bridge plug, cement, cement retainer); method to set plugs; wait-on-cement times, if any; and any deviations from the approved plugging plan (if applicable).

For conversion to a non-injection well, include the following information: Depths of activity; type of activity; changes to injection well configuration, well casing, or cement behind casing; any plug added to the well and its depth; any newly drilled interval and its depth; depths of new perforations; and method(s) to demonstrate that the well has mechanical integrity (as applicable).

For all of the above activities, include a well sketch depicting the work, results of well tests/logging performed, service company tickets, and any other available information demonstrating how the work was/is to be performed. Also, specify whether depths are below ground surface, relative to Kelly bushing, etc.

CERTIFICATION: This form must be signed and dated by either: a responsible corporate officer for a corporation, by a general partner for a partnership, by the proprietor of a sole proprietorship, or by a principal executive or ranking elected official for a public agency.

PAPERWORK REDUCTION ACT NOTICE: The public reporting and recordkeeping burden for this collection of information is estimated to average between 6.0 and 7.9 hours per response, depending on the injection well class. Burden means the total time, effort, or financial resource expended by persons to generate, maintain, retain, or disclose or provide information to or for a Federal Agency. This includes the time needed to review instructions; develop, acquire, install, and utilize technology and systems for the purposes of collecting, validating, and verifying information, processing and maintaining information, and disclosing and providing information; adjust the existing ways to comply with any previously applicable instructions and requirements; train personnel to be able to respond to the collection of information; search data sources; complete and review the collection of information; and, transmit or otherwise disclose the information. An agency may not conduct or sponsor, and a person is not required to respond to, a collection of information unless it displays a currently valid OMB control number. Send comments on the Agency's need for this information, the accuracy of the provided burden estimates, and any suggested methods for minimizing respondent burden, including the use of automated collection techniques to Director, Collection Strategies Division, U.S. Environmental Protection Agency (2822), 1200 Pennsylvania Ave., NW., Washington, D.C. 20460. Include the OMB control number in any correspondence. Do not send the completed forms to this address.

AS-BUILT COREHOLE 150S

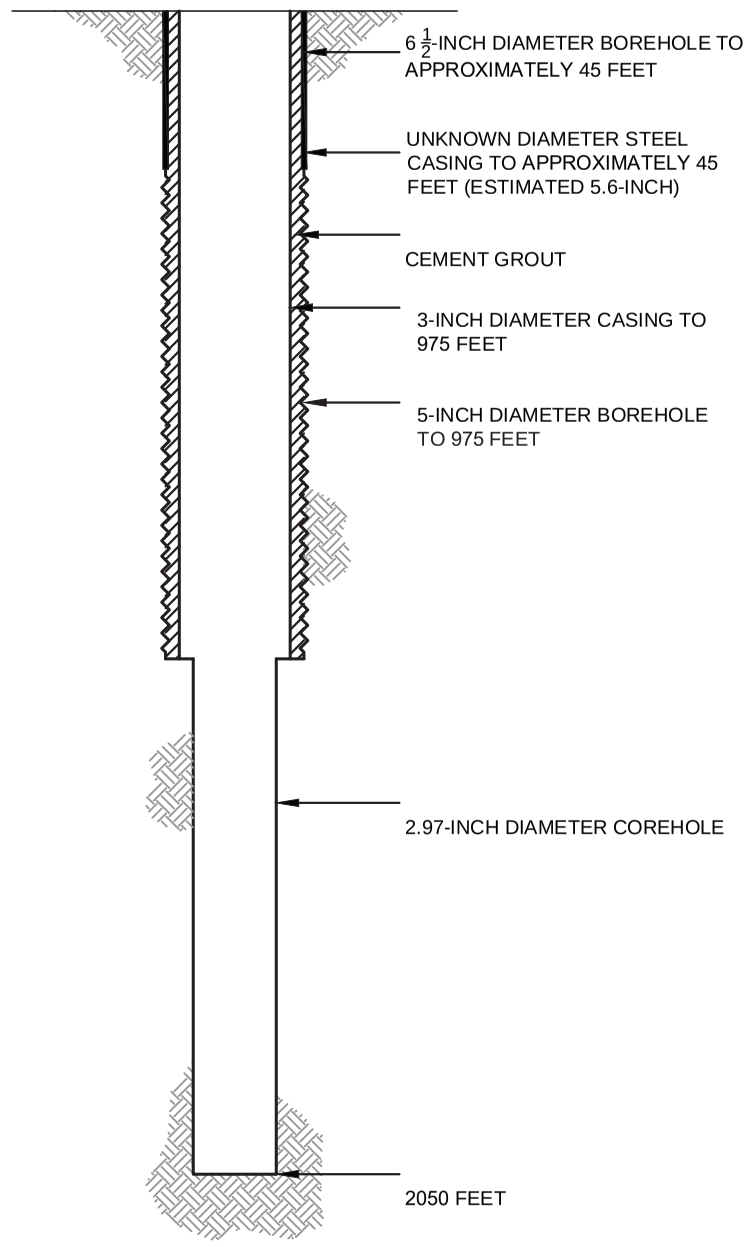

PROPOSED PLUGGING AND ABANDONMENT COREHOLE 150S

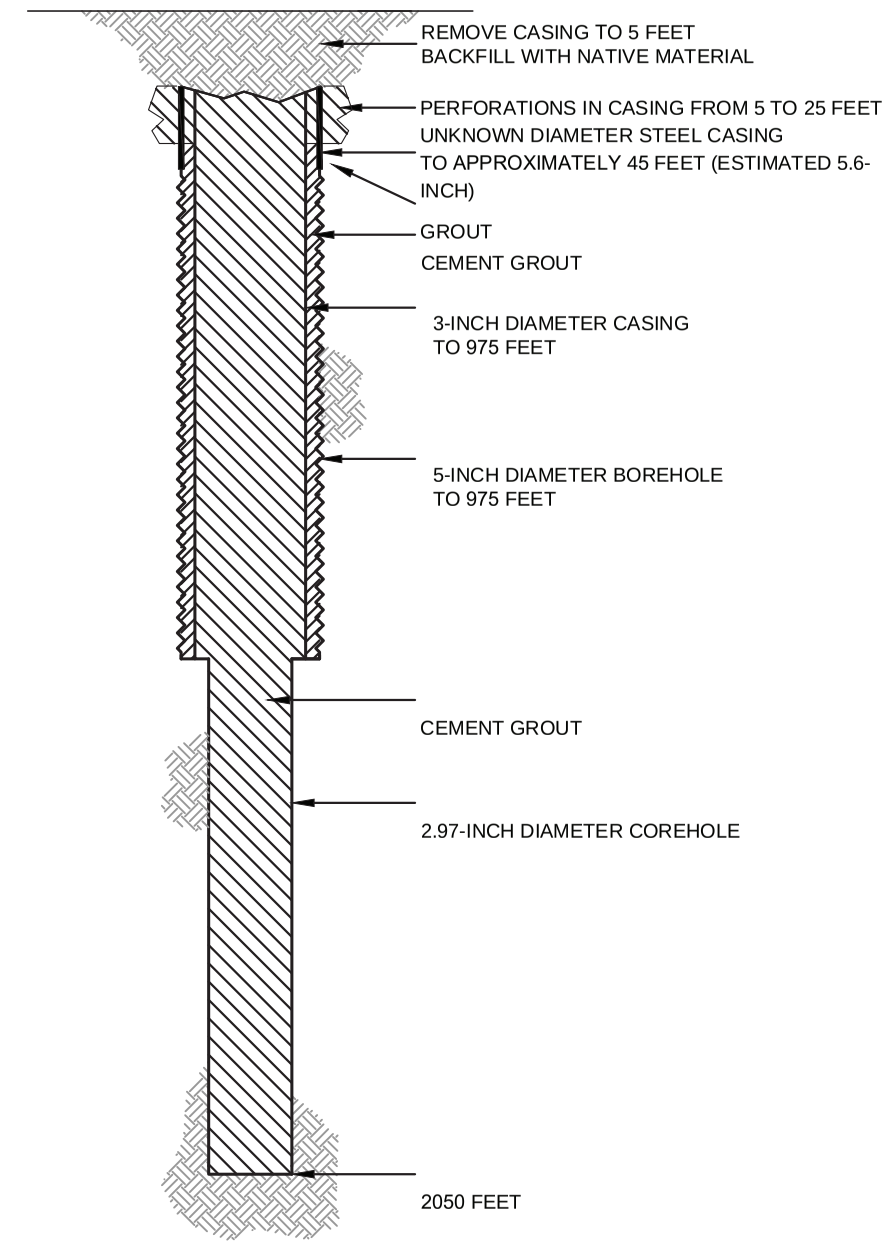

HALEY ALDRICH

FLORENCE COPPER, INC.
FLORENCE, ARIZONA

COREHOLE 150S DIAGRAM

FLORENCE COPPER INC.

NOT TO SCALE
SEPTEMBER 2019

FIGURE 1

MOBINI, GITA Printed: 4/21/2017 12:00 PM Layout: ABANDON (2)
G:\PROJECTS\CURIS RESOURCES\38706-CURIS FEASIBILITY\DRAWINGS\EPA\WELL ABANDON\415S_ABANDON.DWG

OMB No. 2040-0042 Approval Expires 4/30/2022

United States Environmental Protection Agency

EPA

WELL REWORK RECORD, PLUGGING AND ABANDONMENT PLAN, OR PLUGGING AND ABANDONMENT AFFIDAVIT

Name and Address, Phone Number and/or Email of Permittee

Florence Copper Project
1575 W Hunt Hwy,
Florence, AZ 85132

Permit or EPA ID Number	API Number	Full Well Name
R9UIC-AZ3-FY11-1		151

State	County
Arizona	Pinal

Locate well in two directions from nearest lines of quarter section and drilling unit

Surface Location

SW 1/4 of NW 1/4 of Section 28 Township 4S Range 9E

Latitude 33.05335051

Longitude -111.4363064

_____ ft. from (N/S) _____ Line of quarter section

_____ ft. from (E/W) _____ Line of quarter section.

Well Class	Timing of Action (pick one)	Type of Action (pick one)
☐ Class I ☐ Class II ☑ Class III ☐ Class V	☑ Notice Prior to Work Date Expected to Commence March 2021 ☐ Report After Work Date Work Ended	☐ Well Rework ☑ Plugging and Abandonment ☐ Conversion to a Non-Injection Well

Provide a narrative description of the work planned to be performed, or that was performed. Use additional pages as necessary. See instructions.

A workover rig capable of performing the required abandonment operations at the required depths will be moved in and set up over the core hole. The core hole will be inspected to determine the depth to which the hole remains open and if any obstructions are present in the core hole; the presence and condition of any existing collar will also be documented. If necessary, the core hole will be cleaned out to a depth of at least 100 feet below the bedrock-LBFU contact to enable placement of cement seals.

If collar is present, an attempt will be made to remove it. If removal of the collar is not feasible, it will be left in the hole and perforated as needed to allow an annular seal to be placed to a depth of at least 25 feet bgs. In areas of agricultural use, the surface casing will be cut at least 5 feet bgs and removed.

If the collar cannot be removed, it will be perforated from at least 20 feet below the bedrock-LBFU contact to at least 20 feet above the contact; from at least 20 feet below the base of the MFGU to at least 20 feet above the top of the MFGU; and from at least 25 feet bgs to 5 feet bgs.

A tremie pipe will be used to place Type V cement in the open core hole from the bottom of the core hole to the top of the core hole. Cement retainers, as described above, will be used to force cement grout into the annulus and behind perforated intervals, as necessary.

If the hole has been obstructed, as much cement as possible will be placed from 100 feet below the LBFU-bedrock contact to the top of the core hole.

The volume of Type V cement will be recorded and will not be less than the estimated volume of material required to fill each interval. All cement grout will consist of Type V cement, or equivalent approved in accordance with the UIC Permit.

Certification

I certify under the penalty of law that I have personally examined and am familiar with the information submitted in this document and all attachments and that, based on my inquiry of those individuals immediately responsible for obtaining the information, I believe that the information is true, accurate, and complete. I am aware that there are significant penalties for submitting false information, including the possibliity of fine and imprisonment. (Ref. 40 CFR § 144.32)

Name and Official Title *(Please type or print)*	Signature	Date Signed
Dan Johnson, VP - General Manager		10/3/2019

INSTRUCTIONS FOR FORM 7520-19

This form replaces forms 7520-12 and 7520-14. Use this form only when work is planned or has occurred that affects the well's construction or operation as an injection well, including work on the casing, tubing or packer (or for shallow Class V wells, the subsurface fluid emplacement network). Use one form per injection well. While reports or other information developed by contractors or service companies may be attached, this form must be signed by a responsible entity as described at 40 CFR 144.32. Note: operators closing Class V wells should use Form 7520-17.

NAME, ADDRESS, PHONE AND/OR EMAIL OF PERMITTEE: Enter the name and street address, city/town, state, and ZIP code of the permittee. Also provide an email address (if available) and/or a phone number.

PERMIT OR EPA ID NUMBER: Enter the well identification number or permit number assigned to the well by the EPA or the permitting authority.

API NUMBER: Enter the number assigned by the local jurisdiction (usually a State Oil and Gas Agency) using the American Petroleum Institute standard numbering system.

FULL WELL NAME: Enter the full name of the well or project.

Enter the **STATE** and **COUNTY** where the well is located. For States that do not have counties, use the name of that State's equivalent jurisdiction at a more local level.

WELL LOCATION: Fill in the complete township, range, and section to the nearest quarter-quarter section. A township is north or south of the baseline, and a range is east or west of the principal meridian (e.g., T12N, R34W). Also include the distance, in feet, from the nearest north or south line and nearest east or west line of the quarter-section. Also, enter the **latitude** and **longitude** of the well in decimal degrees, to five or six places if possible; be sure to include a negative sign for the longitude of a well in the Western Hemisphere and a negative sign for the latitude of a well in the Southern Hemisphere.

Enter the **WELL CLASS,** i.e., the class of injection well as defined in 40 CFR 144.6.

TIMING OF THE ACTION: Check ***Notice prior to work*** if the activity has not yet occurred (i.e., is planned). Check ***Report after work*** if the activity described has already occurred. As appropriate, include the date the activity is expected to start or the date the activity was completed. (Note this may not be available, e.g., for a plugging plan submitted with a permit application.)

TYPE OF ACTION: Check the appropriate box to describe the kind of activity being reported. Check ***Well Rework*** for work that was/will be performed on the well after it has already been in operation as an injection well. Check ***Plugging and Abandonment*** to report on plans for or descriptions of final closure/plugging after use as an injection well. Check ***Conversion to a Non-Injection Well*** if the well is to be converted to something other than an injection well.

Provide a **NARRATIVE DESCRIPTION** of the work planned to be performed, or that was performed. The narrative should include a description of the main procedures planned or that occurred during the work activity. A service company report, daily report, or similar document may be attached if it includes all the requested information and is clear and legible.

For well reworks, include the following information: The reason for the well rework; depths of activity; type of activity; changes to injection well configuration, well casing, or cement behind casing; any plug added to the well and its depth; any newly drilled interval and its depth; method(s) to demonstrate that the well has mechanical integrity (as applicable); and any deviations from the approved rework plan (as applicable).

For a well plugging plan, include the following information: Reason for the well plugging; number of plugs placed, and their depths; materials used as plugs (e.g., cast iron bridge plug, cement, cement retainer); method to set plugs; and wait-on-cement times, if any. Also provide one or more cost estimates from an independent firm in the business of plugging and abandoning wells to plug the well as described in the plan.

For well plugging affidavit, include the following information: Reason for the well plugging; number of plugs placed, and their depths; materials used as plugs (e.g., cast iron bridge plug, cement, cement retainer); method to set plugs; wait-on-cement times, if any; and any deviations from the approved plugging plan (if applicable).

For conversion to a non-injection well, include the following information: Depths of activity; type of activity; changes to injection well configuration, well casing, or cement behind casing; any plug added to the well and its depth; any newly drilled interval and its depth; depths of new perforations; and method(s) to demonstrate that the well has mechanical integrity (as applicable).

For all of the above activities, include a well sketch depicting the work, results of well tests/logging performed, service company tickets, and any other available information demonstrating how the work was/is to be performed. Also, specify whether depths are below ground surface, relative to Kelly bushing, etc.

CERTIFICATION: This form must be signed and dated by either: a responsible corporate officer for a corporation, by a general partner for a partnership, by the proprietor of a sole proprietorship, or by a principal executive or ranking elected official for a public agency.

PAPERWORK REDUCTION ACT NOTICE: The public reporting and recordkeeping burden for this collection of information is estimated to average between 6.0 and 7.9 hours per response, depending on the injection well class. Burden means the total time, effort, or financial resource expended by persons to generate, maintain, retain, or disclose or provide information to or for a Federal Agency. This includes the time needed to review instructions; develop, acquire, install, and utilize technology and systems for the purposes of collecting, validating, and verifying information, processing and maintaining information, and disclosing and providing information; adjust the existing ways to comply with any previously applicable instructions and requirements; train personnel to be able to respond to the collection of information; search data sources; complete and review the collection of information; and, transmit or otherwise disclose the information. An agency may not conduct or sponsor, and a person is not required to respond to, a collection of information unless it displays a currently valid OMB control number. Send comments on the Agency's need for this information, the accuracy of the provided burden estimates, and any suggested methods for minimizing respondent burden, including the use of automated collection techniques to Director, Collection Strategies Division, U.S. Environmental Protection Agency (2822), 1200 Pennsylvania Ave., NW., Washington, D.C. 20460. Include the OMB control number in any correspondence. Do not send the completed forms to this address.

AS-BUILT COREHOLE 151

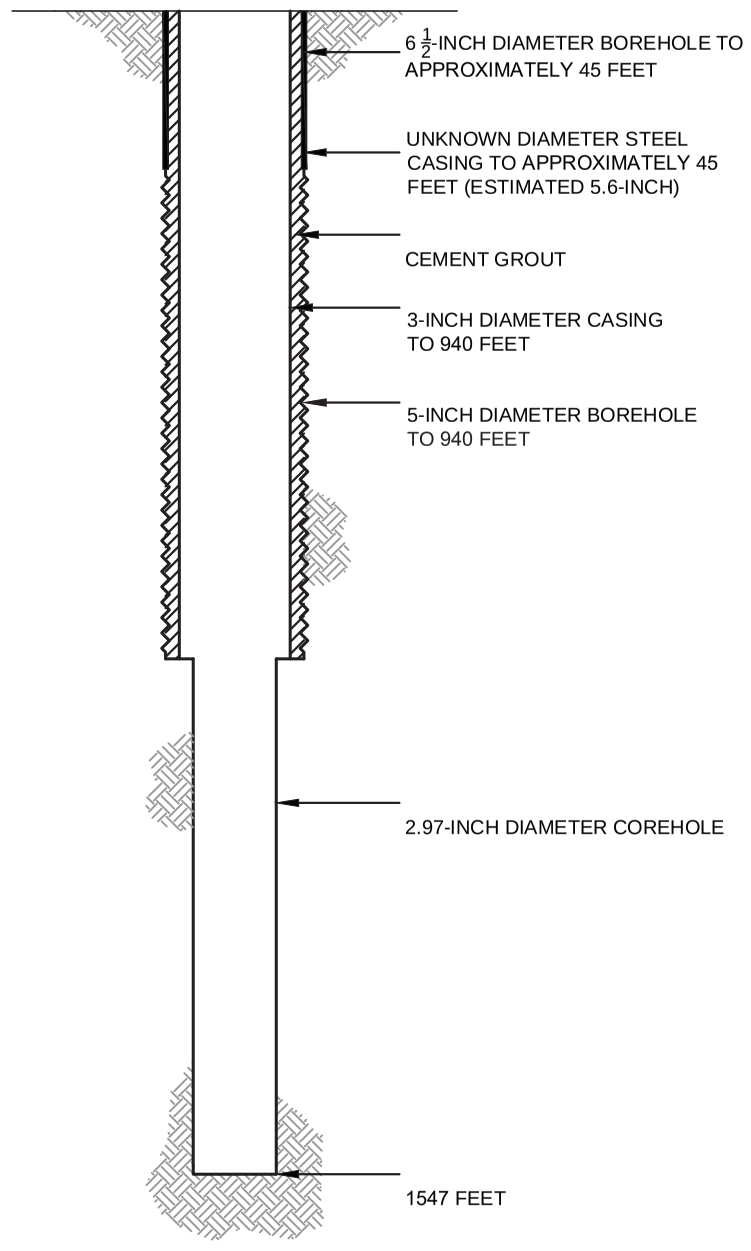

PROPOSED PLUGGING AND ABANDONMENT COREHOLE 151

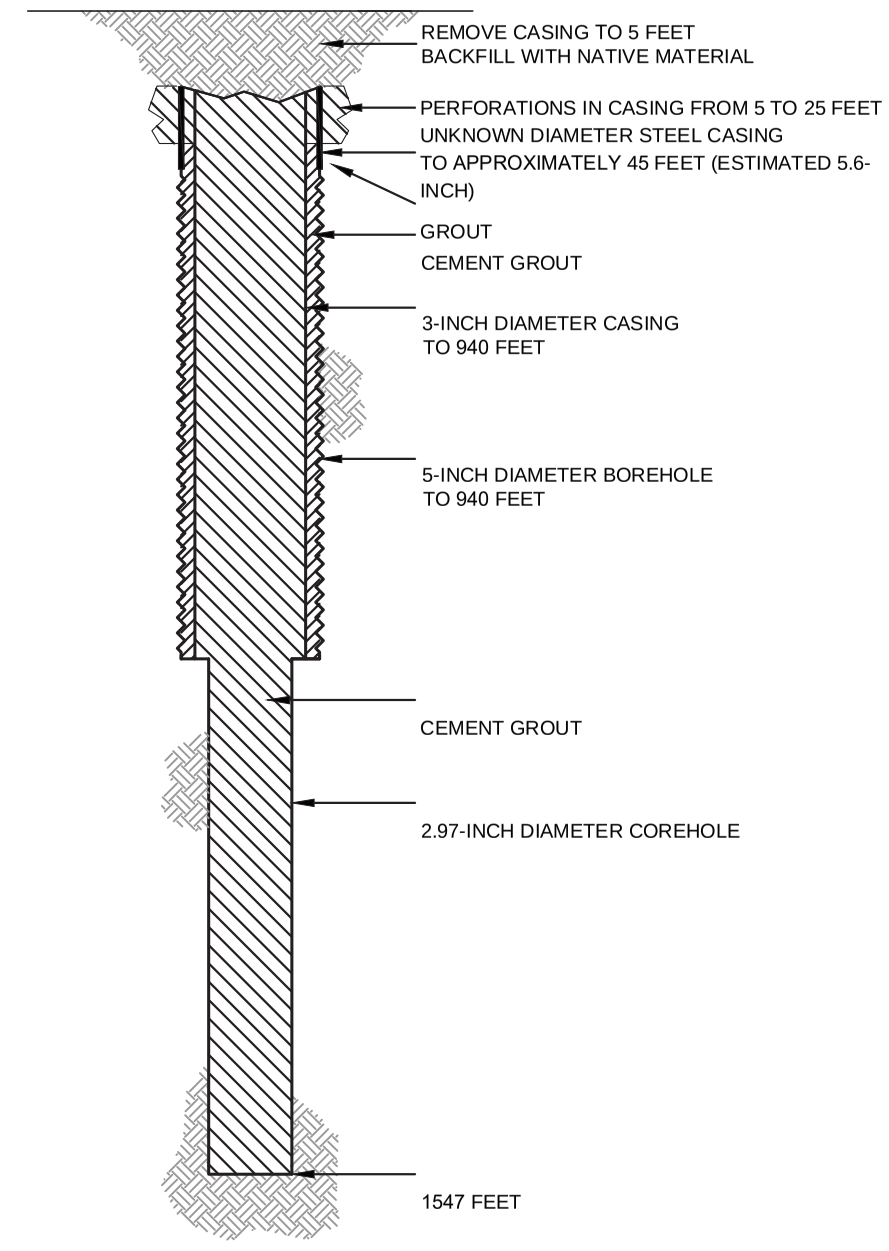

HALEY ALDRICH

FLORENCE COPPER, INC.
FLORENCE, ARIZONA

COREHOLE 151 DIAGRAM

FLORENCE COPPER INC.

NOT TO SCALE
SEPTEMBER 2019

FIGURE 1

MOBINI, GITA Printed: 4/21/2017 12:00 PM Layout: ABANDON (2)
G:\PROJECTS\CURIS RESOURCES\38706-CURIS FEASIBILITY\DRAWINGS\EPA\WELL ABANDON\415S_ABANDON.DWG

OMB No. 2040-0042 Approval Expires 4/30/2022

United States Environmental Protection Agency

EPA

WELL REWORK RECORD, PLUGGING AND ABANDONMENT PLAN, OR PLUGGING AND ABANDONMENT AFFIDAVIT

Name and Address, Phone Number and/or Email of Permittee

Florence Copper Project
1575 W Hunt Hwy,
Florence, AZ 85132

Permit or EPA ID Number	API Number	Full Well Name
R9UIC-AZ3-FY11-1		152

State	County
Arizona	Pinal

Locate well in two directions from nearest lines of quarter section and drilling unit

Latitude 33.05329794

Longitude -111.4264666

Surface Location

SW **1/4 of** NE **1/4 of Section** 28 **Township** 4S **Range** 9E

_____ **ft. from (N/S)** _____ **Line of quarter section**

_____ **ft. from (E/W)** _____ **Line of quarter section.**

Well Class	Timing of Action (pick one)	Type of Action (pick one)
☐ Class I ☐ Class II ☑ Class III ☐ Class V	☑ Notice Prior to Work Date Expected to Commence March 2021 ☐ Report After Work Date Work Ended	☐ Well Rework ☑ Plugging and Abandonment ☐ Conversion to a Non-Injection Well

Provide a narrative description of the work planned to be performed, or that was performed. Use additional pages as necessary. See instructions.

A workover rig capable of performing the required abandonment operations at the required depths will be moved in and set up over the core hole. The core hole will be inspected to determine the depth to which the hole remains open and if any obstructions are present in the core hole; the presence and condition of any existing collar will also be documented. If necessary, the core hole will be cleaned out to a depth of at least 100 feet below the bedrock-LBFU contact to enable placement of cement seals.

If collar is present, an attempt will be made to remove it. If removal of the collar is not feasible, it will be left in the hole and perforated as needed to allow an annular seal to be placed to a depth of at least 25 feet bgs. In areas of agricultural use, the surface casing will be cut at least 5 feet bgs and removed.

If the collar cannot be removed, it will be perforated from at least 20 feet below the bedrock-LBFU contact to at least 20 feet above the contact; from at least 20 feet below the base of the MFGU to at least 20 feet above the top of the MFGU; and from at least 25 feet bgs to 5 feet bgs.

A tremie pipe will be used to place Type V cement in the open core hole from the bottom of the core hole to the top of the core hole. Cement retainers, as described above, will be used to force cement grout into the annulus and behind perforated intervals, as necessary.

If the hole has been obstructed, as much cement as possible will be placed from 100 feet below the LBFU-bedrock contact to the top of the core hole.

The volume of Type V cement will be recorded and will not be less than the estimated volume of material required to fill each interval. All cement grout will consist of Type V cement, or equivalent approved in accordance with the UIC Permit.

Certification

I certify under the penalty of law that I have personally examined and am familiar with the information submitted in this document and all attachments and that, based on my inquiry of those individuals immediately responsible for obtaining the information, I believe that the information is true, accurate, and complete. I am aware that there are significant penalties for submitting false information, including the possibliity of fine and imprisonment. (Ref. 40 CFR § 144.32)

Name and Official Title *(Please type or print)*	Signature	Date Signed
Dan Johnson, VP - General Manager		10/3/2019

INSTRUCTIONS FOR FORM 7520-19

This form replaces forms 7520-12 and 7520-14. Use this form only when work is planned or has occurred that affects the well's construction or operation as an injection well, including work on the casing, tubing or packer (or for shallow Class V wells, the subsurface fluid emplacement network). Use one form per injection well. While reports or other information developed by contractors or service companies may be attached, this form must be signed by a responsible entity as described at 40 CFR 144.32. Note: operators closing Class V wells should use Form 7520-17.

NAME, ADDRESS, PHONE AND/OR EMAIL OF PERMITTEE: Enter the name and street address, city/town, state, and ZIP code of the permittee. Also provide an email address (if available) and/or a phone number.

PERMIT OR EPA ID NUMBER: Enter the well identification number or permit number assigned to the well by the EPA or the permitting authority.

API NUMBER: Enter the number assigned by the local jurisdiction (usually a State Oil and Gas Agency) using the American Petroleum Institute standard numbering system.

FULL WELL NAME: Enter the full name of the well or project.

Enter the **STATE** and **COUNTY** where the well is located. For States that do not have counties, use the name of that State's equivalent jurisdiction at a more local level.

WELL LOCATION: Fill in the complete township, range, and section to the nearest quarter-quarter section. A township is north or south of the baseline, and a range is east or west of the principal meridian (e.g., T12N, R34W). Also include the distance, in feet, from the nearest north or south line and nearest east or west line of the quarter-section. Also, enter the **latitude** and **longitude** of the well in decimal degrees, to five or six places if possible; be sure to include a negative sign for the longitude of a well in the Western Hemisphere and a negative sign for the latitude of a well in the Southern Hemisphere.

Enter the **WELL CLASS,** i.e., the class of injection well as defined in 40 CFR 144.6.

TIMING OF THE ACTION: Check ***Notice prior to work*** if the activity has not yet occurred (i.e., is planned). Check ***Report after work*** if the activity described has already occurred. As appropriate, include the date the activity is expected to start or the date the activity was completed. (Note this may not be available, e.g., for a plugging plan submitted with a permit application.)

TYPE OF ACTION: Check the appropriate box to describe the kind of activity being reported. Check ***Well Rework*** for work that was/will be performed on the well after it has already been in operation as an injection well. Check ***Plugging and Abandonment*** to report on plans for or descriptions of final closure/plugging after use as an injection well. Check ***Conversion to a Non-Injection Well*** if the well is to be converted to something other than an injection well.

Provide a **NARRATIVE DESCRIPTION** of the work planned to be performed, or that was performed. The narrative should include a description of the main procedures planned or that occurred during the work activity. A service company report, daily report, or similar document may be attached if it includes all the requested information and is clear and legible.

For well reworks, include the following information: The reason for the well rework; depths of activity; type of activity; changes to injection well configuration, well casing, or cement behind casing; any plug added to the well and its depth; any newly drilled interval and its depth; method(s) to demonstrate that the well has mechanical integrity (as applicable); and any deviations from the approved rework plan (as applicable).

For a well plugging plan, include the following information: Reason for the well plugging; number of plugs placed, and their depths; materials used as plugs (e.g., cast iron bridge plug, cement, cement retainer); method to set plugs; and wait-on-cement times, if any. Also provide one or more cost estimates from an independent firm in the business of plugging and abandoning wells to plug the well as described in the plan.

For well plugging affidavit, include the following information: Reason for the well plugging; number of plugs placed, and their depths; materials used as plugs (e.g., cast iron bridge plug, cement, cement retainer); method to set plugs; wait-on-cement times, if any; and any deviations from the approved plugging plan (if applicable).

For conversion to a non-injection well, include the following information: Depths of activity; type of activity; changes to injection well configuration, well casing, or cement behind casing; any plug added to the well and its depth; any newly drilled interval and its depth; depths of new perforations; and method(s) to demonstrate that the well has mechanical integrity (as applicable).

For all of the above activities, include a well sketch depicting the work, results of well tests/logging performed, service company tickets, and any other available information demonstrating how the work was/is to be performed. Also, specify whether depths are below ground surface, relative to Kelly bushing, etc.

CERTIFICATION: This form must be signed and dated by either: a responsible corporate officer for a corporation, by a general partner for a partnership, by the proprietor of a sole proprietorship, or by a principal executive or ranking elected official for a public agency.

PAPERWORK REDUCTION ACT NOTICE: The public reporting and recordkeeping burden for this collection of information is estimated to average between 6.0 and 7.9 hours per response, depending on the injection well class. Burden means the total time, effort, or financial resource expended by persons to generate, maintain, retain, or disclose or provide information to or for a Federal Agency. This includes the time needed to review instructions; develop, acquire, install, and utilize technology and systems for the purposes of collecting, validating, and verifying information, processing and maintaining information, and disclosing and providing information; adjust the existing ways to comply with any previously applicable instructions and requirements; train personnel to be able to respond to the collection of information; search data sources; complete and review the collection of information; and, transmit or otherwise disclose the information. An agency may not conduct or sponsor, and a person is not required to respond to, a collection of information unless it displays a currently valid OMB control number. Send comments on the Agency's need for this information, the accuracy of the provided burden estimates, and any suggested methods for minimizing respondent burden, including the use of automated collection techniques to Director, Collection Strategies Division, U.S. Environmental Protection Agency (2822), 1200 Pennsylvania Ave., NW., Washington, D.C. 20460. Include the OMB control number in any correspondence. Do not send the completed forms to this address.

AS-BUILT COREHOLE 152

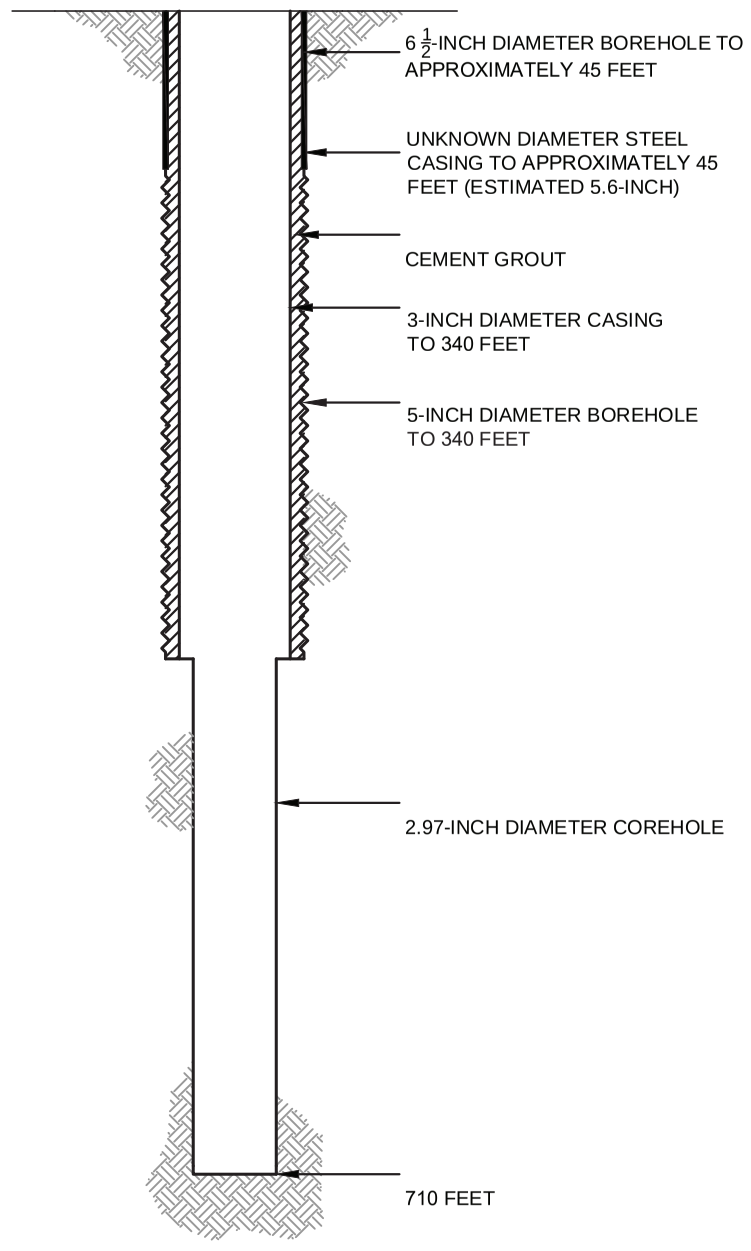

PROPOSED PLUGGING AND ABANDONMENT COREHOLE 152

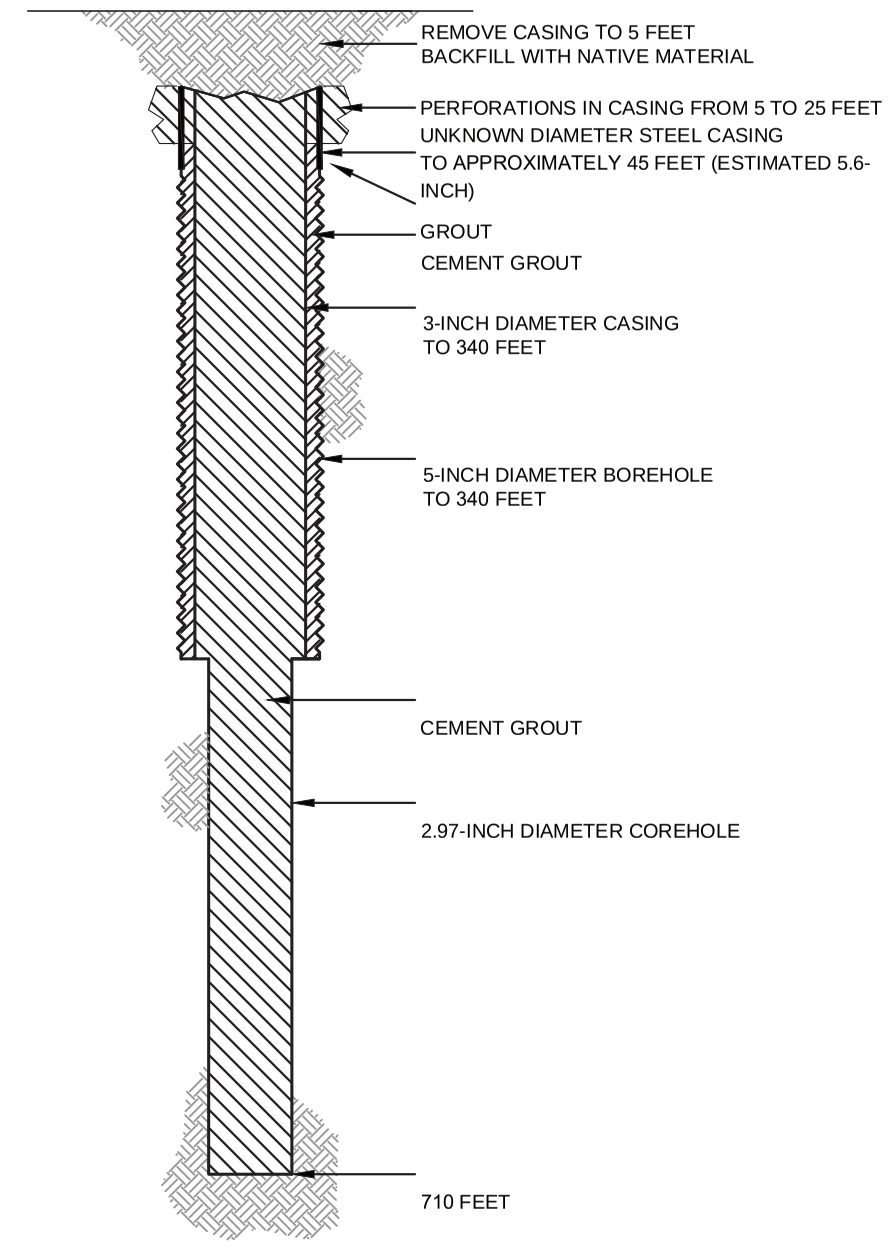

HALEY ALDRICH

FLORENCE COPPER, INC.
FLORENCE, ARIZONA

COREHOLE 152 DIAGRAM

FLORENCE COPPER INC.

NOT TO SCALE
SEPTEMBER 2019

FIGURE 1

MOBINI, GITA Printed: 4/21/2017 12:00 PM Layout: ABANDON (2)
G:\PROJECTS\CURIS RESOURCES\38706-CURIS FEASIBILITY\DRAWINGS\EPA\WELL ABANDON\415S_ABANDON.DWG

OMB No. 2040-0042 Approval Expires 4/30/2022

United States Environmental Protection Agency

WELL REWORK RECORD, PLUGGING AND ABANDONMENT PLAN, OR PLUGGING AND ABANDONMENT AFFIDAVIT

Name and Address, Phone Number and/or Email of Permittee

Florence Copper Project
1575 W Hunt Hwy,
Florence, AZ 85132

Permit or EPA ID Number	API Number	Full Well Name
R9UIC-AZ3-FY11-1		153

State	County
Arizona	Pinal

Locate well in two directions from nearest lines of quarter section and drilling unit

Surface Location

SE 1/4 of NW 1/4 of Section 28 Township 4S Range 9E

Latitude 33.05335447

Longitude -111.4329924

_____ ft. from (N/S) _____ Line of quarter section

_____ ft. from (E/W) _____ Line of quarter section.

Well Class	Timing of Action (pick one)	Type of Action (pick one)
☐ Class I ☐ Class II ☑ Class III ☐ Class V	☑ Notice Prior to Work Date Expected to Commence March 2021 ☐ Report After Work Date Work Ended	☐ Well Rework ☑ Plugging and Abandonment ☐ Conversion to a Non-Injection Well

Provide a narrative description of the work planned to be performed, or that was performed. Use additional pages as necessary. See instructions.

A workover rig capable of performing the required abandonment operations at the required depths will be moved in and set up over the core hole. The core hole will be inspected to determine the depth to which the hole remains open and if any obstructions are present in the core hole; the presence and condition of any existing collar will also be documented. If necessary, the core hole will be cleaned out to a depth of at least 100 feet below the bedrock-LBFU contact to enable placement of cement seals.

If collar is present, an attempt will be made to remove it. If removal of the collar is not feasible, it will be left in the hole and perforated as needed to allow an annular seal to be placed to a depth of at least 25 feet bgs. In areas of agricultural use, the surface casing will be cut at least 5 feet bgs and removed.

If the collar cannot be removed, it will be perforated from at least 20 feet below the bedrock-LBFU contact to at least 20 feet above the contact; from at least 20 feet below the base of the MFGU to at least 20 feet above the top of the MFGU; and from at least 25 feet bgs to 5 feet bgs.

A tremie pipe will be used to place Type V cement in the open core hole from the bottom of the core hole to the top of the core hole. Cement retainers, as described above, will be used to force cement grout into the annulus and behind perforated intervals, as necessary.

If the hole has been obstructed, as much cement as possible will be placed from 100 feet below the LBFU-bedrock contact to the top of the core hole.

The volume of Type V cement will be recorded and will not be less than the estimated volume of material required to fill each interval. All cement grout will consist of Type V cement, or equivalent approved in accordance with the UIC Permit.

Certification

I certify under the penalty of law that I have personally examined and am familiar with the information submitted in this document and all attachments and that, based on my inquiry of those individuals immediately responsible for obtaining the information, I believe that the information is true, accurate, and complete. I am aware that there are significant penalties for submitting false information, including the possibliity of fine and imprisonment. (Ref. 40 CFR § 144.32)

Name and Official Title *(Please type or print)*	Signature	Date Signed
Dan Johnson, VP - General Manager		10/3/2019

INSTRUCTIONS FOR FORM 7520-19

This form replaces forms 7520-12 and 7520-14. Use this form only when work is planned or has occurred that affects the well's construction or operation as an injection well, including work on the casing, tubing or packer (or for shallow Class V wells, the subsurface fluid emplacement network). Use one form per injection well. While reports or other information developed by contractors or service companies may be attached, this form must be signed by a responsible entity as described at 40 CFR 144.32. Note: operators closing Class V wells should use Form 7520-17.

NAME, ADDRESS, PHONE AND/OR EMAIL OF PERMITTEE: Enter the name and street address, city/town, state, and ZIP code of the permittee. Also provide an email address (if available) and/or a phone number.

PERMIT OR EPA ID NUMBER: Enter the well identification number or permit number assigned to the well by the EPA or the permitting authority.

API NUMBER: Enter the number assigned by the local jurisdiction (usually a State Oil and Gas Agency) using the American Petroleum Institute standard numbering system.

FULL WELL NAME: Enter the full name of the well or project.

Enter the **STATE** and **COUNTY** where the well is located. For States that do not have counties, use the name of that State's equivalent jurisdiction at a more local level.

WELL LOCATION: Fill in the complete township, range, and section to the nearest quarter-quarter section. A township is north or south of the baseline, and a range is east or west of the principal meridian (e.g., T12N, R34W). Also include the distance, in feet, from the nearest north or south line and nearest east or west line of the quarter-section. Also, enter the **latitude** and **longitude** of the well in decimal degrees, to five or six places if possible; be sure to include a negative sign for the longitude of a well in the Western Hemisphere and a negative sign for the latitude of a well in the Southern Hemisphere.

Enter the **WELL CLASS,** i.e., the class of injection well as defined in 40 CFR 144.6.

TIMING OF THE ACTION: Check ***Notice prior to work*** if the activity has not yet occurred (i.e., is planned). Check ***Report after work*** if the activity described has already occurred. As appropriate, include the date the activity is expected to start or the date the activity was completed. (Note this may not be available, e.g., for a plugging plan submitted with a permit application.)

TYPE OF ACTION: Check the appropriate box to describe the kind of activity being reported. Check ***Well Rework*** for work that was/will be performed on the well after it has already been in operation as an injection well. Check ***Plugging and Abandonment*** to report on plans for or descriptions of final closure/plugging after use as an injection well. Check ***Conversion to a Non-Injection Well*** if the well is to be converted to something other than an injection well.

Provide a **NARRATIVE DESCRIPTION** of the work planned to be performed, or that was performed. The narrative should include a description of the main procedures planned or that occurred during the work activity. A service company report, daily report, or similar document may be attached if it includes all the requested information and is clear and legible.

For well reworks, include the following information: The reason for the well rework; depths of activity; type of activity; changes to injection well configuration, well casing, or cement behind casing; any plug added to the well and its depth; any newly drilled interval and its depth; method(s) to demonstrate that the well has mechanical integrity (as applicable); and any deviations from the approved rework plan (as applicable).

For a well plugging plan, include the following information: Reason for the well plugging; number of plugs placed, and their depths; materials used as plugs (e.g., cast iron bridge plug, cement, cement retainer); method to set plugs; and wait-on-cement times, if any. Also provide one or more cost estimates from an independent firm in the business of plugging and abandoning wells to plug the well as described in the plan.

For well plugging affidavit, include the following information: Reason for the well plugging; number of plugs placed, and their depths; materials used as plugs (e.g., cast iron bridge plug, cement, cement retainer); method to set plugs; wait-on-cement times, if any; and any deviations from the approved plugging plan (if applicable).

For conversion to a non-injection well, include the following information: Depths of activity; type of activity; changes to injection well configuration, well casing, or cement behind casing; any plug added to the well and its depth; any newly drilled interval and its depth; depths of new perforations; and method(s) to demonstrate that the well has mechanical integrity (as applicable).

For all of the above activities, include a well sketch depicting the work, results of well tests/logging performed, service company tickets, and any other available information demonstrating how the work was/is to be performed. Also, specify whether depths are below ground surface, relative to Kelly bushing, etc.

CERTIFICATION: This form must be signed and dated by either: a responsible corporate officer for a corporation, by a general partner for a partnership, by the proprietor of a sole proprietorship, or by a principal executive or ranking elected official for a public agency.

PAPERWORK REDUCTION ACT NOTICE: The public reporting and recordkeeping burden for this collection of information is estimated to average between 6.0 and 7.9 hours per response, depending on the injection well class. Burden means the total time, effort, or financial resource expended by persons to generate, maintain, retain, or disclose or provide information to or for a Federal Agency. This includes the time needed to review instructions; develop, acquire, install, and utilize technology and systems for the purposes of collecting, validating, and verifying information, processing and maintaining information, and disclosing and providing information; adjust the existing ways to comply with any previously applicable instructions and requirements; train personnel to be able to respond to the collection of information; search data sources; complete and review the collection of information; and, transmit or otherwise disclose the information. An agency may not conduct or sponsor, and a person is not required to respond to, a collection of information unless it displays a currently valid OMB control number. Send comments on the Agency's need for this information, the accuracy of the provided burden estimates, and any suggested methods for minimizing respondent burden, including the use of automated collection techniques to Director, Collection Strategies Division, U.S. Environmental Protection Agency (2822), 1200 Pennsylvania Ave., NW., Washington, D.C. 20460. Include the OMB control number in any correspondence. Do not send the completed forms to this address.

AS-BUILT COREHOLE 153

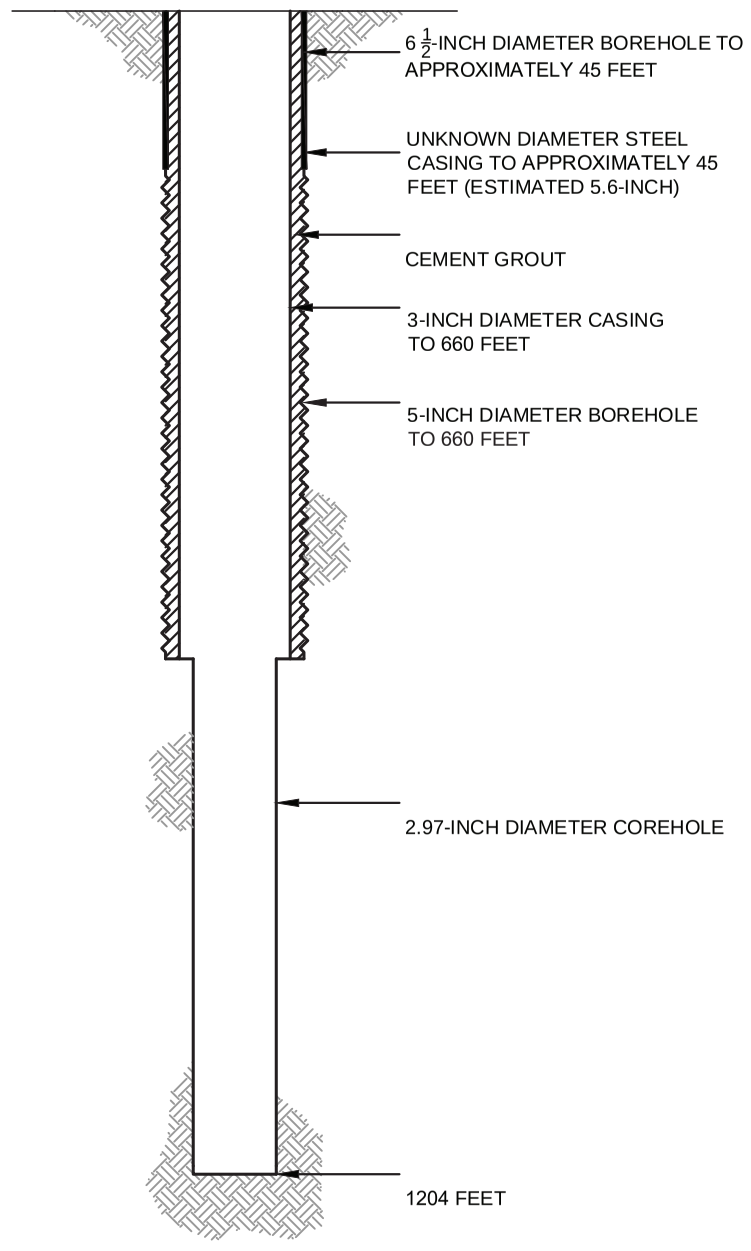

PROPOSED PLUGGING AND ABANDONMENT COREHOLE 153

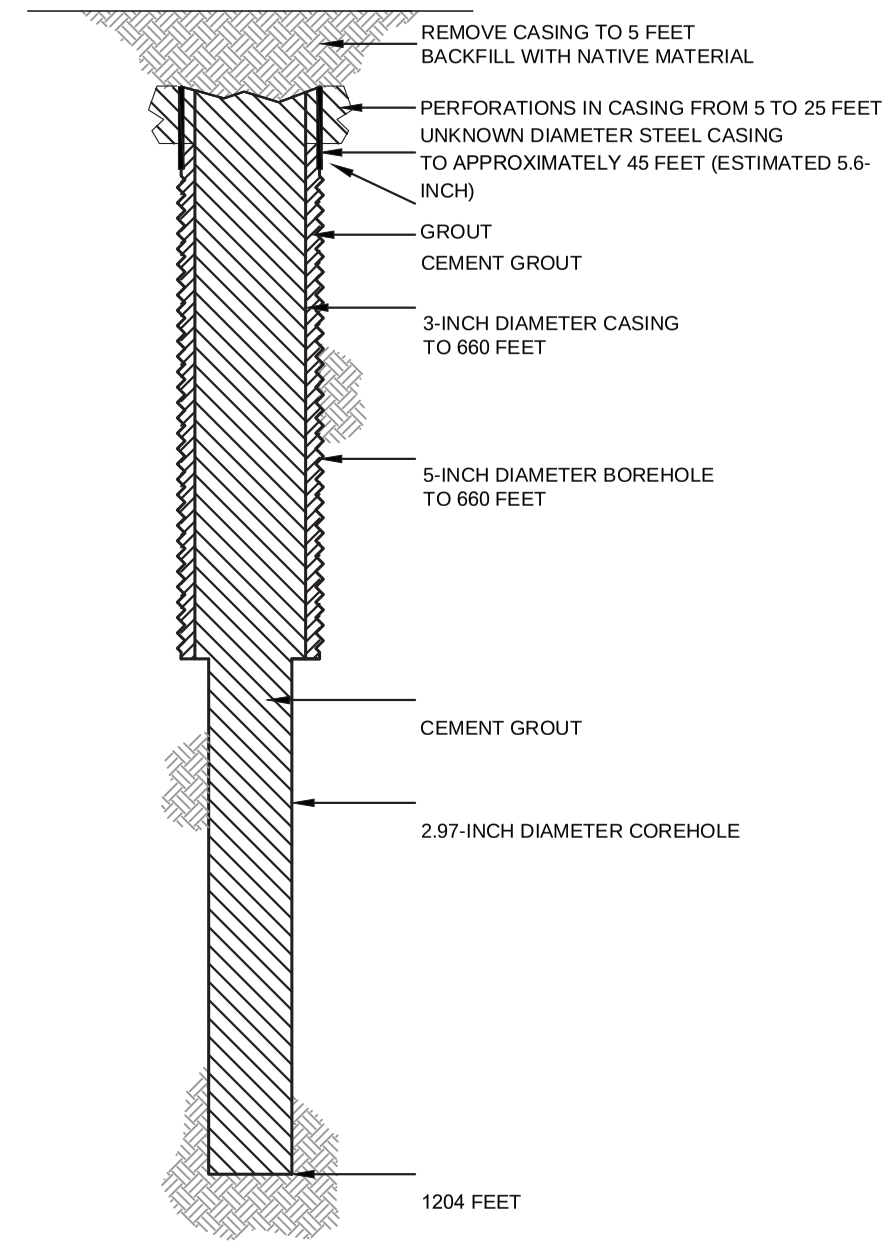

HALEY ALDRICH

FLORENCE COPPER, INC.
FLORENCE, ARIZONA

COREHOLE 153 DIAGRAM

FLORENCE COPPER INC.

NOT TO SCALE
SEPTEMBER 2019

FIGURE 1

MOBINI, GITA Printed: 4/21/2017 12:00 PM Layout: ABANDON (2)
G:\PROJECTS\CURIS RESOURCES\38706-CURIS FEASIBILITY\DRAWINGS\EPA\WELL ABANDON\415S_ABANDON.DWG

OMB No. 2040-0042 Approval Expires 4/30/2022

United States Environmental Protection Agency

WELL REWORK RECORD, PLUGGING AND ABANDONMENT PLAN, OR PLUGGING AND ABANDONMENT AFFIDAVIT

Name and Address, Phone Number and/or Email of Permittee

Florence Copper Project
1575 W Hunt Hwy,
Florence, AZ 85132

Permit or EPA ID Number	API Number	Full Well Name
R9UIC-AZ3-FY11-1		154S

State	County
Arizona	Pinal

Locate well in two directions from nearest lines of quarter section and drilling unit

Latitude 33.05091596

Longitude -111.4248542

Surface Location

NE **1/4 of** SE **1/4 of Section** 28 **Township** 4S **Range** 9E

_____ **ft. from (N/S)** _____ **Line of quarter section**

_____ **ft. from (E/W)** _____ **Line of quarter section.**

Well Class	Timing of Action (pick one)	Type of Action (pick one)
☐ Class I ☐ Class II ☑ Class III ☐ Class V	☑ Notice Prior to Work Date Expected to Commence March 2021 ☐ Report After Work Date Work Ended	☐ Well Rework ☑ Plugging and Abandonment ☐ Conversion to a Non-Injection Well

Provide a narrative description of the work planned to be performed, or that was performed. Use additional pages as necessary. See instructions.

A workover rig capable of performing the required abandonment operations at the required depths will be moved in and set up over the core hole. The core hole will be inspected to determine the depth to which the hole remains open and if any obstructions are present in the core hole; the presence and condition of any existing collar will also be documented. If necessary, the core hole will be cleaned out to a depth of at least 100 feet below the bedrock-LBFU contact to enable placement of cement seals.

If collar is present, an attempt will be made to remove it. If removal of the collar is not feasible, it will be left in the hole and perforated as needed to allow an annular seal to be placed to a depth of at least 25 feet bgs. In areas of agricultural use, the surface casing will be cut at least 5 feet bgs and removed.

If the collar cannot be removed, it will be perforated from at least 20 feet below the bedrock-LBFU contact to at least 20 feet above the contact; from at least 20 feet below the base of the MFGU to at least 20 feet above the top of the MFGU; and from at least 25 feet bgs to 5 feet bgs.

A tremie pipe will be used to place Type V cement in the open core hole from the bottom of the core hole to the top of the core hole. Cement retainers, as described above, will be used to force cement grout into the annulus and behind perforated intervals, as necessary.

If the hole has been obstructed, as much cement as possible will be placed from 100 feet below the LBFU-bedrock contact to the top of the core hole.

The volume of Type V cement will be recorded and will not be less than the estimated volume of material required to fill each interval. All cement grout will consist of Type V cement, or equivalent approved in accordance with the UIC Permit.

Certification

I certify under the penalty of law that I have personally examined and am familiar with the information submitted in this document and all attachments and that, based on my inquiry of those individuals immediately responsible for obtaining the information, I believe that the information is true, accurate, and complete. I am aware that there are significant penalties for submitting false information, including the possibliity of fine and imprisonment. (Ref. 40 CFR § 144.32)

Name and Official Title *(Please type or print)*	Signature	Date Signed
Dan Johnson, VP - General Manager		10/3/2019

INSTRUCTIONS FOR FORM 7520-19

This form replaces forms 7520-12 and 7520-14. Use this form only when work is planned or has occurred that affects the well's construction or operation as an injection well, including work on the casing, tubing or packer (or for shallow Class V wells, the subsurface fluid emplacement network). Use one form per injection well. While reports or other information developed by contractors or service companies may be attached, this form must be signed by a responsible entity as described at 40 CFR 144.32. Note: operators closing Class V wells should use Form 7520-17.

NAME, ADDRESS, PHONE AND/OR EMAIL OF PERMITTEE: Enter the name and street address, city/town, state, and ZIP code of the permittee. Also provide an email address (if available) and/or a phone number.

PERMIT OR EPA ID NUMBER: Enter the well identification number or permit number assigned to the well by the EPA or the permitting authority.

API NUMBER: Enter the number assigned by the local jurisdiction (usually a State Oil and Gas Agency) using the American Petroleum Institute standard numbering system.

FULL WELL NAME: Enter the full name of the well or project.

Enter the **STATE** and **COUNTY** where the well is located. For States that do not have counties, use the name of that State's equivalent jurisdiction at a more local level.

WELL LOCATION: Fill in the complete township, range, and section to the nearest quarter-quarter section. A township is north or south of the baseline, and a range is east or west of the principal meridian (e.g., T12N, R34W). Also include the distance, in feet, from the nearest north or south line and nearest east or west line of the quarter-section. Also, enter the **latitude** and **longitude** of the well in decimal degrees, to five or six places if possible; be sure to include a negative sign for the longitude of a well in the Western Hemisphere and a negative sign for the latitude of a well in the Southern Hemisphere.

Enter the **WELL CLASS,** i.e., the class of injection well as defined in 40 CFR 144.6.

TIMING OF THE ACTION: Check ***Notice prior to work*** if the activity has not yet occurred (i.e., is planned). Check ***Report after work*** if the activity described has already occurred. As appropriate, include the date the activity is expected to start or the date the activity was completed. (Note this may not be available, e.g., for a plugging plan submitted with a permit application.)

TYPE OF ACTION: Check the appropriate box to describe the kind of activity being reported. Check ***Well Rework*** for work that was/will be performed on the well after it has already been in operation as an injection well. Check ***Plugging and Abandonment*** to report on plans for or descriptions of final closure/plugging after use as an injection well. Check ***Conversion to a Non-Injection Well*** if the well is to be converted to something other than an injection well.

Provide a **NARRATIVE DESCRIPTION** of the work planned to be performed, or that was performed. The narrative should include a description of the main procedures planned or that occurred during the work activity. A service company report, daily report, or similar document may be attached if it includes all the requested information and is clear and legible.

For well reworks, include the following information: The reason for the well rework; depths of activity; type of activity; changes to injection well configuration, well casing, or cement behind casing; any plug added to the well and its depth; any newly drilled interval and its depth; method(s) to demonstrate that the well has mechanical integrity (as applicable); and any deviations from the approved rework plan (as applicable).

For a well plugging plan, include the following information: Reason for the well plugging; number of plugs placed, and their depths; materials used as plugs (e.g., cast iron bridge plug, cement, cement retainer); method to set plugs; and wait-on-cement times, if any. Also provide one or more cost estimates from an independent firm in the business of plugging and abandoning wells to plug the well as described in the plan.

For well plugging affidavit, include the following information: Reason for the well plugging; number of plugs placed, and their depths; materials used as plugs (e.g., cast iron bridge plug, cement, cement retainer); method to set plugs; wait-on-cement times, if any; and any deviations from the approved plugging plan (if applicable).

For conversion to a non-injection well, include the following information: Depths of activity; type of activity; changes to injection well configuration, well casing, or cement behind casing; any plug added to the well and its depth; any newly drilled interval and its depth; depths of new perforations; and method(s) to demonstrate that the well has mechanical integrity (as applicable).

For all of the above activities, include a well sketch depicting the work, results of well tests/logging performed, service company tickets, and any other available information demonstrating how the work was/is to be performed. Also, specify whether depths are below ground surface, relative to Kelly bushing, etc.

CERTIFICATION: This form must be signed and dated by either: a responsible corporate officer for a corporation, by a general partner for a partnership, by the proprietor of a sole proprietorship, or by a principal executive or ranking elected official for a public agency.

PAPERWORK REDUCTION ACT NOTICE: The public reporting and recordkeeping burden for this collection of information is estimated to average between 6.0 and 7.9 hours per response, depending on the injection well class. Burden means the total time, effort, or financial resource expended by persons to generate, maintain, retain, or disclose or provide information to or for a Federal Agency. This includes the time needed to review instructions; develop, acquire, install, and utilize technology and systems for the purposes of collecting, validating, and verifying information, processing and maintaining information, and disclosing and providing information; adjust the existing ways to comply with any previously applicable instructions and requirements; train personnel to be able to respond to the collection of information; search data sources; complete and review the collection of information; and, transmit or otherwise disclose the information. An agency may not conduct or sponsor, and a person is not required to respond to, a collection of information unless it displays a currently valid OMB control number. Send comments on the Agency's need for this information, the accuracy of the provided burden estimates, and any suggested methods for minimizing respondent burden, including the use of automated collection techniques to Director, Collection Strategies Division, U.S. Environmental Protection Agency (2822), 1200 Pennsylvania Ave., NW., Washington, D.C. 20460. Include the OMB control number in any correspondence. Do not send the completed forms to this address.

AS-BUILT COREHOLE 154S

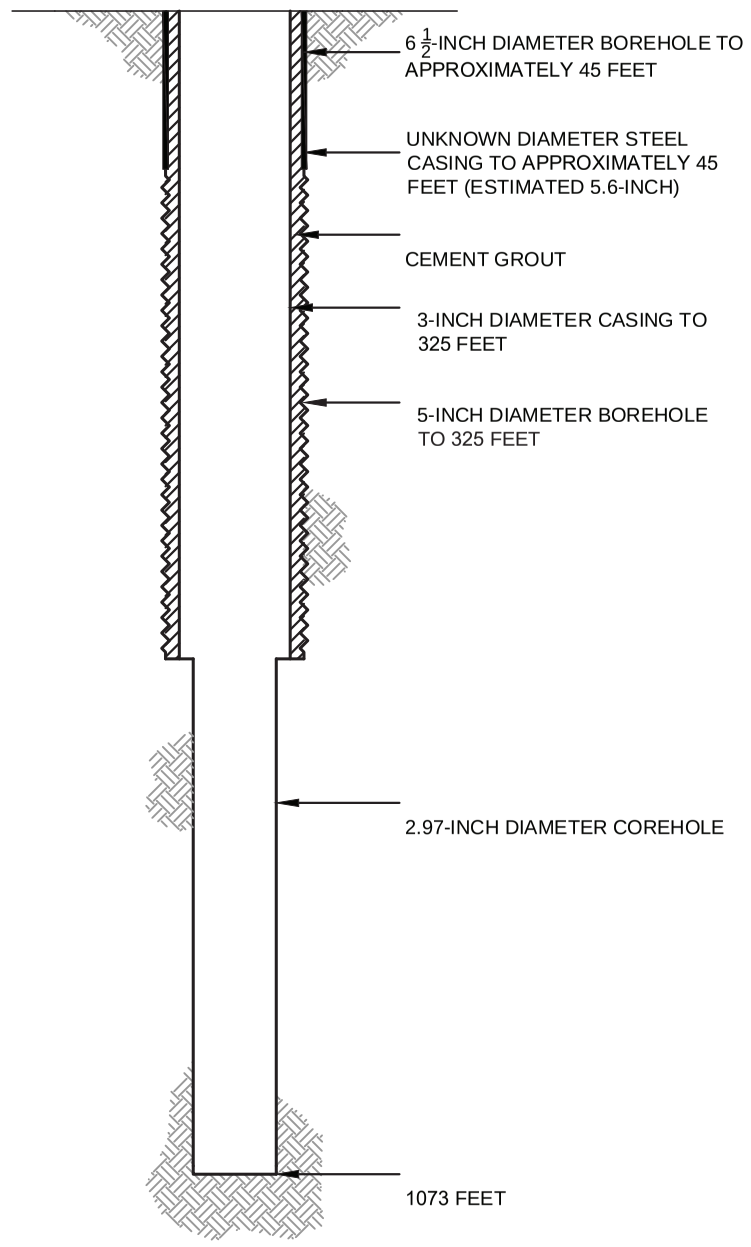

PROPOSED PLUGGING AND ABANDONMENT COREHOLE 154S

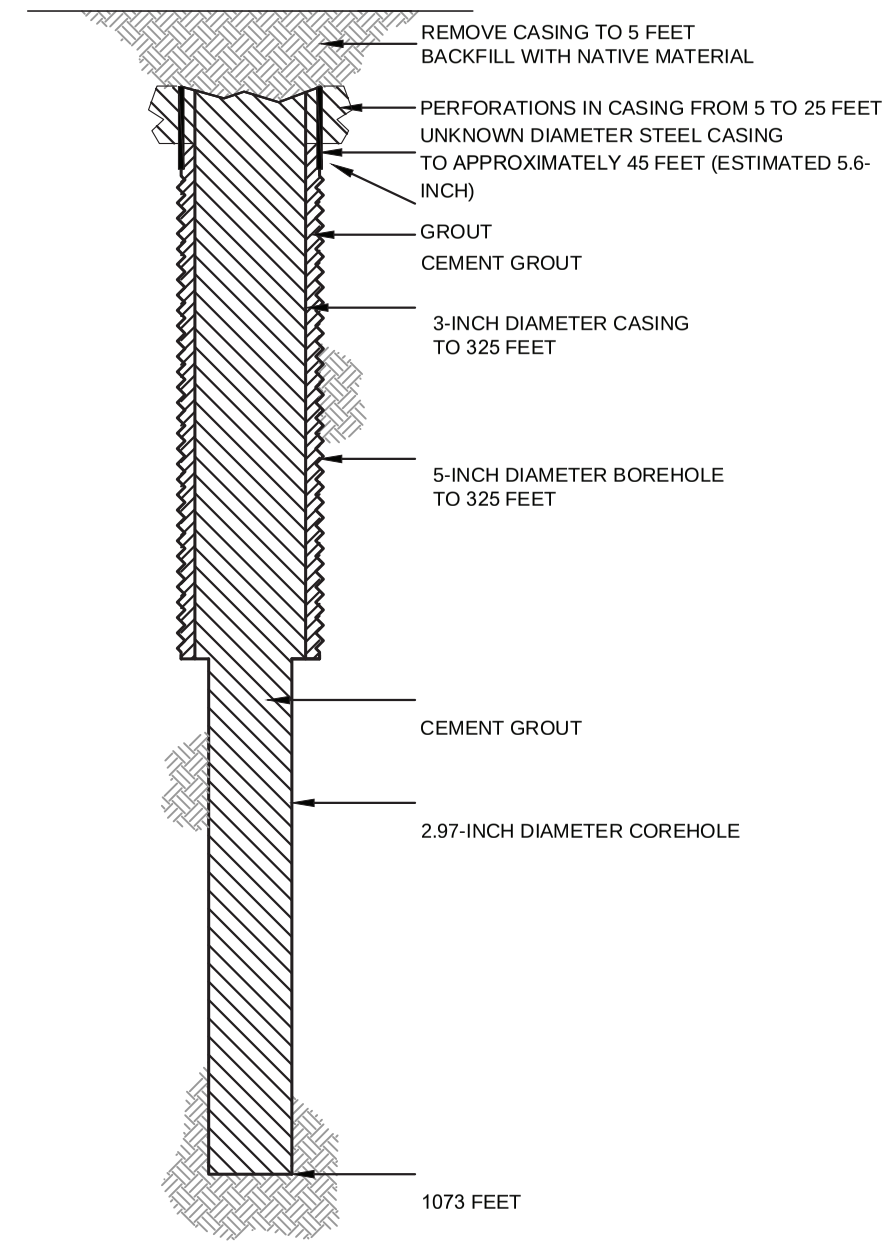

HALEY ALDRICH

FLORENCE COPPER, INC.
FLORENCE, ARIZONA

COREHOLE 154S DIAGRAM

FLORENCE COPPER INC.

NOT TO SCALE
SEPTEMBER 2019

FIGURE 1

MOBINI, GITA Printed: 4/21/2017 12:00 PM Layout: ABANDON (2)
G:\PROJECTS\CURIS RESOURCES\38706-CURIS FEASIBILITY\DRAWINGS\EPA\WELL ABANDON\415S_ABANDON.DWG

OMB No. 2040-0042 Approval Expires 4/30/2022

United States Environmental Protection Agency

WELL REWORK RECORD, PLUGGING AND ABANDONMENT PLAN, OR PLUGGING AND ABANDONMENT AFFIDAVIT

Name and Address, Phone Number and/or Email of Permittee

Florence Copper Project
1575 W Hunt Hwy,
Florence, AZ 85132

Permit or EPA ID Number	API Number	Full Well Name
R9UIC-AZ3-FY11-1		155S

State	County
Arizona	Pinal

Locate well in two directions from nearest lines of quarter section and drilling unit

Latitude 33.05089951

Surface Location

NE **1/4 of** SE **1/4 of Section** 28 **Township** 4S **Range** 9E

Longitude -111.4231928

_____ **ft. from (N/S)** _____ **Line of quarter section**

_____ **ft. from (E/W)** _____ **Line of quarter section.**

Well Class	Timing of Action (pick one)	Type of Action (pick one)
☐ Class I ☐ Class II ☑ Class III ☐ Class V	☑ Notice Prior to Work Date Expected to Commence March 2021 ☐ Report After Work Date Work Ended	☐ Well Rework ☑ Plugging and Abandonment ☐ Conversion to a Non-Injection Well

Provide a narrative description of the work planned to be performed, or that was performed. Use additional pages as necessary. See instructions.

A workover rig capable of performing the required abandonment operations at the required depths will be moved in and set up over the core hole. The core hole will be inspected to determine the depth to which the hole remains open and if any obstructions are present in the core hole; the presence and condition of any existing collar will also be documented. If necessary, the core hole will be cleaned out to a depth of at least 100 feet below the bedrock-LBFU contact to enable placement of cement seals.

If collar is present, an attempt will be made to remove it. If removal of the collar is not feasible, it will be left in the hole and perforated as needed to allow an annular seal to be placed to a depth of at least 25 feet bgs. In areas of agricultural use, the surface casing will be cut at least 5 feet bgs and removed.

If the collar cannot be removed, it will be perforated from at least 20 feet below the bedrock-LBFU contact to at least 20 feet above the contact; from at least 20 feet below the base of the MFGU to at least 20 feet above the top of the MFGU; and from at least 25 feet bgs to 5 feet bgs.

A tremie pipe will be used to place Type V cement in the open core hole from the bottom of the core hole to the top of the core hole. Cement retainers, as described above, will be used to force cement grout into the annulus and behind perforated intervals, as necessary.

If the hole has been obstructed, as much cement as possible will be placed from 100 feet below the LBFU-bedrock contact to the top of the core hole.

The volume of Type V cement will be recorded and will not be less than the estimated volume of material required to fill each interval. All cement grout will consist of Type V cement, or equivalent approved in accordance with the UIC Permit.

Certification

I certify under the penalty of law that I have personally examined and am familiar with the information submitted in this document and all attachments and that, based on my inquiry of those individuals immediately responsible for obtaining the information, I believe that the information is true, accurate, and complete. I am aware that there are significant penalties for submitting false information, including the possibliity of fine and imprisonment. (Ref. 40 CFR § 144.32)

Name and Official Title *(Please type or print)*	Signature	Date Signed
Dan Johnson, VP - General Manager		10/3/2019

INSTRUCTIONS FOR FORM 7520-19

This form replaces forms 7520-12 and 7520-14. Use this form only when work is planned or has occurred that affects the well's construction or operation as an injection well, including work on the casing, tubing or packer (or for shallow Class V wells, the subsurface fluid emplacement network). Use one form per injection well. While reports or other information developed by contractors or service companies may be attached, this form must be signed by a responsible entity as described at 40 CFR 144.32. Note: operators closing Class V wells should use Form 7520-17.

NAME, ADDRESS, PHONE AND/OR EMAIL OF PERMITTEE: Enter the name and street address, city/town, state, and ZIP code of the permittee. Also provide an email address (if available) and/or a phone number.

PERMIT OR EPA ID NUMBER: Enter the well identification number or permit number assigned to the well by the EPA or the permitting authority.

API NUMBER: Enter the number assigned by the local jurisdiction (usually a State Oil and Gas Agency) using the American Petroleum Institute standard numbering system.

FULL WELL NAME: Enter the full name of the well or project.

Enter the **STATE** and **COUNTY** where the well is located. For States that do not have counties, use the name of that State's equivalent jurisdiction at a more local level.

WELL LOCATION: Fill in the complete township, range, and section to the nearest quarter-quarter section. A township is north or south of the baseline, and a range is east or west of the principal meridian (e.g., T12N, R34W). Also include the distance, in feet, from the nearest north or south line and nearest east or west line of the quarter-section. Also, enter the **latitude** and **longitude** of the well in decimal degrees, to five or six places if possible; be sure to include a negative sign for the longitude of a well in the Western Hemisphere and a negative sign for the latitude of a well in the Southern Hemisphere.

Enter the **WELL CLASS,** i.e., the class of injection well as defined in 40 CFR 144.6.

TIMING OF THE ACTION: Check ***Notice prior to work*** if the activity has not yet occurred (i.e., is planned). Check ***Report after work*** if the activity described has already occurred. As appropriate, include the date the activity is expected to start or the date the activity was completed. (Note this may not be available, e.g., for a plugging plan submitted with a permit application.)

TYPE OF ACTION: Check the appropriate box to describe the kind of activity being reported. Check ***Well Rework*** for work that was/will be performed on the well after it has already been in operation as an injection well. Check ***Plugging and Abandonment*** to report on plans for or descriptions of final closure/plugging after use as an injection well. Check ***Conversion to a Non-Injection Well*** if the well is to be converted to something other than an injection well.

Provide a **NARRATIVE DESCRIPTION** of the work planned to be performed, or that was performed. The narrative should include a description of the main procedures planned or that occurred during the work activity. A service company report, daily report, or similar document may be attached if it includes all the requested information and is clear and legible.

For well reworks, include the following information: The reason for the well rework; depths of activity; type of activity; changes to injection well configuration, well casing, or cement behind casing; any plug added to the well and its depth; any newly drilled interval and its depth; method(s) to demonstrate that the well has mechanical integrity (as applicable); and any deviations from the approved rework plan (as applicable).

For a well plugging plan, include the following information: Reason for the well plugging; number of plugs placed, and their depths; materials used as plugs (e.g., cast iron bridge plug, cement, cement retainer); method to set plugs; and wait-on-cement times, if any. Also provide one or more cost estimates from an independent firm in the business of plugging and abandoning wells to plug the well as described in the plan.

For well plugging affidavit, include the following information: Reason for the well plugging; number of plugs placed, and their depths; materials used as plugs (e.g., cast iron bridge plug, cement, cement retainer); method to set plugs; wait-on-cement times, if any; and any deviations from the approved plugging plan (if applicable).

For conversion to a non-injection well, include the following information: Depths of activity; type of activity; changes to injection well configuration, well casing, or cement behind casing; any plug added to the well and its depth; any newly drilled interval and its depth; depths of new perforations; and method(s) to demonstrate that the well has mechanical integrity (as applicable).

For all of the above activities, include a well sketch depicting the work, results of well tests/logging performed, service company tickets, and any other available information demonstrating how the work was/is to be performed. Also, specify whether depths are below ground surface, relative to Kelly bushing, etc.

CERTIFICATION: This form must be signed and dated by either: a responsible corporate officer for a corporation, by a general partner for a partnership, by the proprietor of a sole proprietorship, or by a principal executive or ranking elected official for a public agency.

PAPERWORK REDUCTION ACT NOTICE: The public reporting and recordkeeping burden for this collection of information is estimated to average between 6.0 and 7.9 hours per response, depending on the injection well class. Burden means the total time, effort, or financial resource expended by persons to generate, maintain, retain, or disclose or provide information to or for a Federal Agency. This includes the time needed to review instructions; develop, acquire, install, and utilize technology and systems for the purposes of collecting, validating, and verifying information, processing and maintaining information, and disclosing and providing information; adjust the existing ways to comply with any previously applicable instructions and requirements; train personnel to be able to respond to the collection of information; search data sources; complete and review the collection of information; and, transmit or otherwise disclose the information. An agency may not conduct or sponsor, and a person is not required to respond to, a collection of information unless it displays a currently valid OMB control number. Send comments on the Agency's need for this information, the accuracy of the provided burden estimates, and any suggested methods for minimizing respondent burden, including the use of automated collection techniques to Director, Collection Strategies Division, U.S. Environmental Protection Agency (2822), 1200 Pennsylvania Ave., NW., Washington, D.C. 20460. Include the OMB control number in any correspondence. Do not send the completed forms to this address.

AS-BUILT COREHOLE 155S

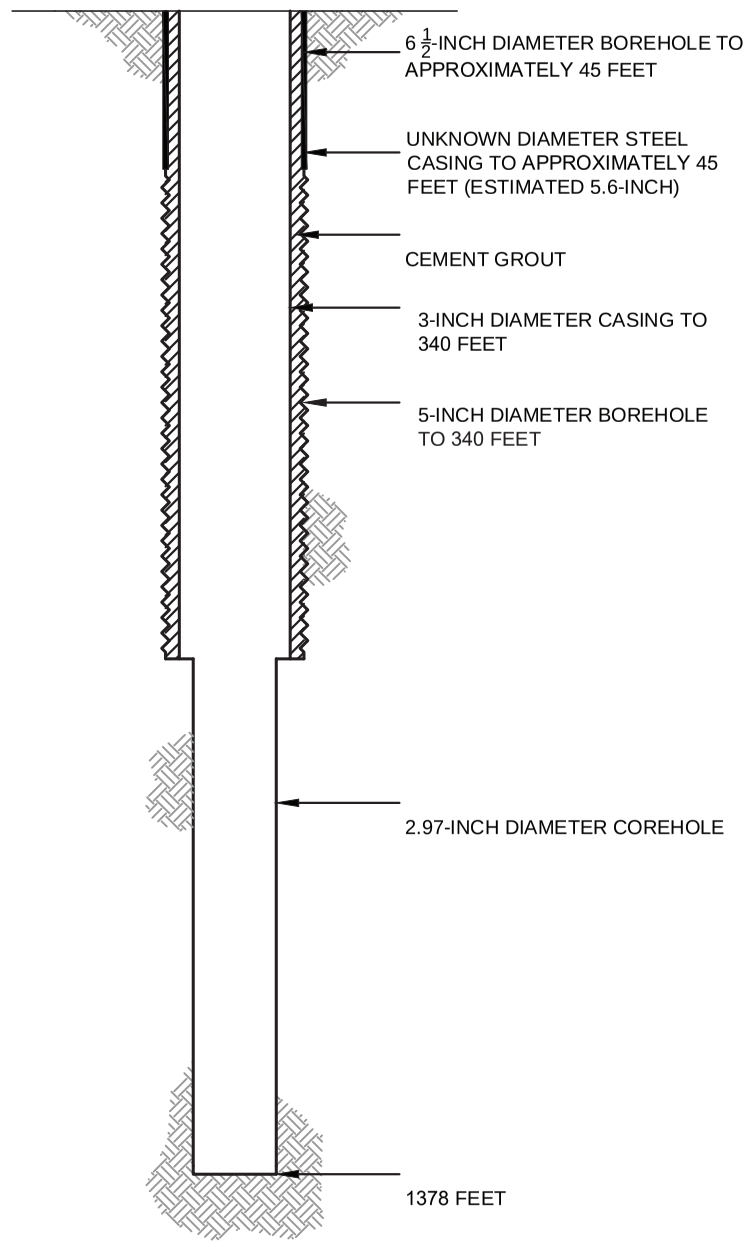

PROPOSED PLUGGING AND ABANDONMENT COREHOLE 155S

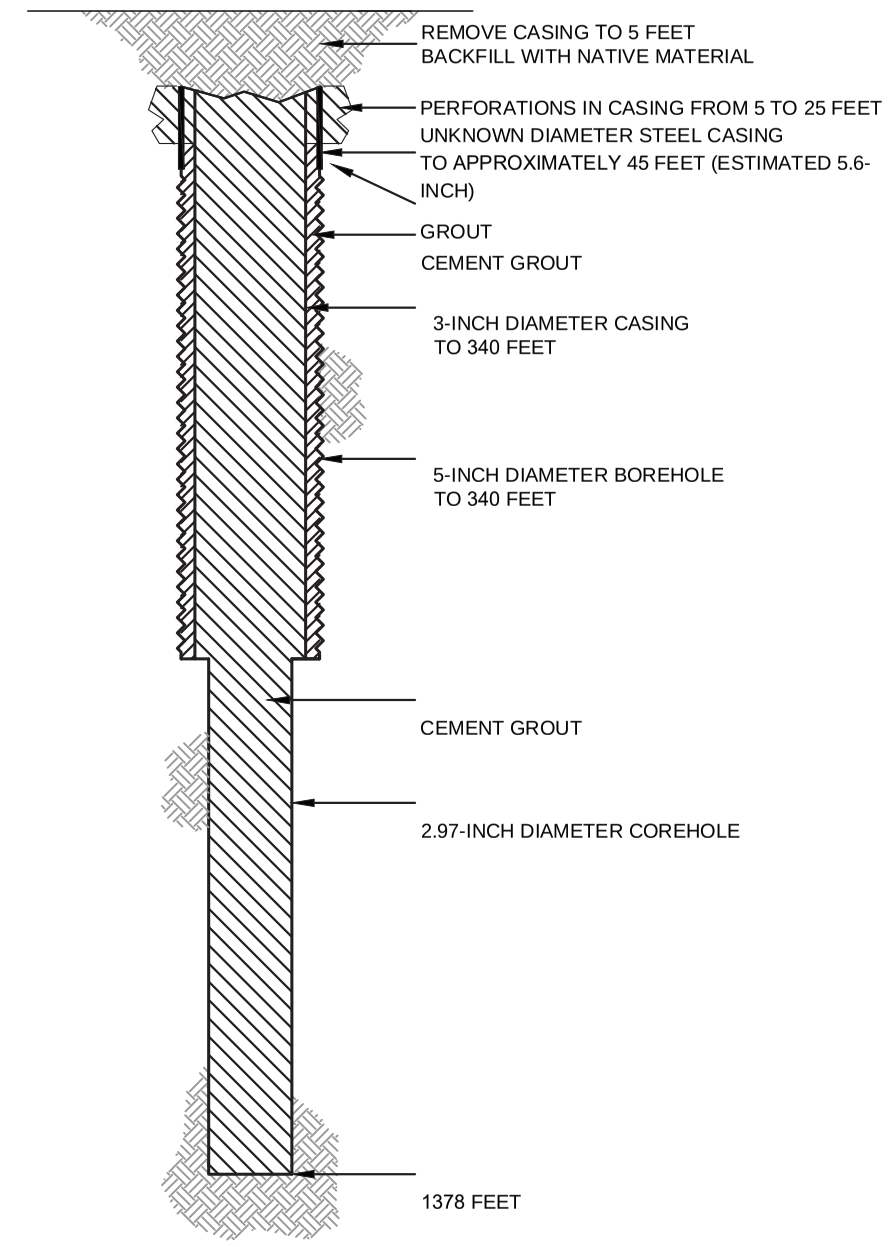

HALEY ALDRICH

FLORENCE COPPER, INC.
FLORENCE, ARIZONA

COREHOLE 155S DIAGRAM

FLORENCE COPPER INC.

NOT TO SCALE
SEPTEMBER 2019

FIGURE 1

MOBINI, GITA Printed: 4/21/2017 12:00 PM Layout: ABANDON (2)
G:\PROJECTS\CURIS RESOURCES\38706-CURIS FEASIBILITY\DRAWINGS\EPA\WELL ABANDON\415S_ABANDON.DWG

OMB No. 2040-0042 Approval Expires 4/30/2022

United States Environmental Protection Agency

WELL REWORK RECORD, PLUGGING AND ABANDONMENT PLAN, OR PLUGGING AND ABANDONMENT AFFIDAVIT

Name and Address, Phone Number and/or Email of Permittee

Florence Copper Project
1575 W Hunt Hwy,
Florence, AZ 85132

Permit or EPA ID Number	API Number	Full Well Name
R9UIC-AZ3-FY11-1		156S

State	County
Arizona	Pinal

Locate well in two directions from nearest lines of quarter section and drilling unit

Latitude 33.05210632

Longitude -111.4272816

Surface Location

NW **1/4 of** SE **1/4 of Section** 28 **Township** 4S **Range** 9E

_____ **ft. from (N/S)** _____ **Line of quarter section**

_____ **ft. from (E/W)** _____ **Line of quarter section.**

Well Class	Timing of Action (pick one)	Type of Action (pick one)
☐ Class I ☐ Class II ☑ Class III ☐ Class V	☑ Notice Prior to Work Date Expected to Commence March 2021 ☐ Report After Work Date Work Ended	☐ Well Rework ☑ Plugging and Abandonment ☐ Conversion to a Non-Injection Well

Provide a narrative description of the work planned to be performed, or that was performed. Use additional pages as necessary. See instructions.

A workover rig capable of performing the required abandonment operations at the required depths will be moved in and set up over the core hole. The core hole will be inspected to determine the depth to which the hole remains open and if any obstructions are present in the core hole; the presence and condition of any existing collar will also be documented. If necessary, the core hole will be cleaned out to a depth of at least 100 feet below the bedrock-LBFU contact to enable placement of cement seals.

If collar is present, an attempt will be made to remove it. If removal of the collar is not feasible, it will be left in the hole and perforated as needed to allow an annular seal to be placed to a depth of at least 25 feet bgs. In areas of agricultural use, the surface casing will be cut at least 5 feet bgs and removed.

If the collar cannot be removed, it will be perforated from at least 20 feet below the bedrock-LBFU contact to at least 20 feet above the contact; from at least 20 feet below the base of the MFGU to at least 20 feet above the top of the MFGU; and from at least 25 feet bgs to 5 feet bgs.

A tremie pipe will be used to place Type V cement in the open core hole from the bottom of the core hole to the top of the core hole. Cement retainers, as described above, will be used to force cement grout into the annulus and behind perforated intervals, as necessary.

If the hole has been obstructed, as much cement as possible will be placed from 100 feet below the LBFU-bedrock contact to the top of the core hole.

The volume of Type V cement will be recorded and will not be less than the estimated volume of material required to fill each interval. All cement grout will consist of Type V cement, or equivalent approved in accordance with the UIC Permit.

Certification

I certify under the penalty of law that I have personally examined and am familiar with the information submitted in this document and all attachments and that, based on my inquiry of those individuals immediately responsible for obtaining the information, I believe that the information is true, accurate, and complete. I am aware that there are significant penalties for submitting false information, including the possibliity of fine and imprisonment. (Ref. 40 CFR § 144.32)

Name and Official Title *(Please type or print)*	Signature	Date Signed
Dan Johnson, VP - General Manager		10/3/2019

INSTRUCTIONS FOR FORM 7520-19

This form replaces forms 7520-12 and 7520-14. Use this form only when work is planned or has occurred that affects the well's construction or operation as an injection well, including work on the casing, tubing or packer (or for shallow Class V wells, the subsurface fluid emplacement network). Use one form per injection well. While reports or other information developed by contractors or service companies may be attached, this form must be signed by a responsible entity as described at 40 CFR 144.32. Note: operators closing Class V wells should use Form 7520-17.

NAME, ADDRESS, PHONE AND/OR EMAIL OF PERMITTEE: Enter the name and street address, city/town, state, and ZIP code of the permittee. Also provide an email address (if available) and/or a phone number.

PERMIT OR EPA ID NUMBER: Enter the well identification number or permit number assigned to the well by the EPA or the permitting authority.

API NUMBER: Enter the number assigned by the local jurisdiction (usually a State Oil and Gas Agency) using the American Petroleum Institute standard numbering system.

FULL WELL NAME: Enter the full name of the well or project.

Enter the **STATE** and **COUNTY** where the well is located. For States that do not have counties, use the name of that State's equivalent jurisdiction at a more local level.

WELL LOCATION: Fill in the complete township, range, and section to the nearest quarter-quarter section. A township is north or south of the baseline, and a range is east or west of the principal meridian (e.g., T12N, R34W). Also include the distance, in feet, from the nearest north or south line and nearest east or west line of the quarter-section. Also, enter the **latitude** and **longitude** of the well in decimal degrees, to five or six places if possible; be sure to include a negative sign for the longitude of a well in the Western Hemisphere and a negative sign for the latitude of a well in the Southern Hemisphere.

Enter the **WELL CLASS,** i.e., the class of injection well as defined in 40 CFR 144.6.

TIMING OF THE ACTION: Check ***Notice prior to work*** if the activity has not yet occurred (i.e., is planned). Check ***Report after work*** if the activity described has already occurred. As appropriate, include the date the activity is expected to start or the date the activity was completed. (Note this may not be available, e.g., for a plugging plan submitted with a permit application.)

TYPE OF ACTION: Check the appropriate box to describe the kind of activity being reported. Check ***Well Rework*** for work that was/will be performed on the well after it has already been in operation as an injection well. Check ***Plugging and Abandonment*** to report on plans for or descriptions of final closure/plugging after use as an injection well. Check ***Conversion to a Non-Injection Well*** if the well is to be converted to something other than an injection well.

Provide a **NARRATIVE DESCRIPTION** of the work planned to be performed, or that was performed. The narrative should include a description of the main procedures planned or that occurred during the work activity. A service company report, daily report, or similar document may be attached if it includes all the requested information and is clear and legible.

For well reworks, include the following information: The reason for the well rework; depths of activity; type of activity; changes to injection well configuration, well casing, or cement behind casing; any plug added to the well and its depth; any newly drilled interval and its depth; method(s) to demonstrate that the well has mechanical integrity (as applicable); and any deviations from the approved rework plan (as applicable).

For a well plugging plan, include the following information: Reason for the well plugging; number of plugs placed, and their depths; materials used as plugs (e.g., cast iron bridge plug, cement, cement retainer); method to set plugs; and wait-on-cement times, if any. Also provide one or more cost estimates from an independent firm in the business of plugging and abandoning wells to plug the well as described in the plan.

For well plugging affidavit, include the following information: Reason for the well plugging; number of plugs placed, and their depths; materials used as plugs (e.g., cast iron bridge plug, cement, cement retainer); method to set plugs; wait-on-cement times, if any; and any deviations from the approved plugging plan (if applicable).

For conversion to a non-injection well, include the following information: Depths of activity; type of activity; changes to injection well configuration, well casing, or cement behind casing; any plug added to the well and its depth; any newly drilled interval and its depth; depths of new perforations; and method(s) to demonstrate that the well has mechanical integrity (as applicable).

For all of the above activities, include a well sketch depicting the work, results of well tests/logging performed, service company tickets, and any other available information demonstrating how the work was/is to be performed. Also, specify whether depths are below ground surface, relative to Kelly bushing, etc.

CERTIFICATION: This form must be signed and dated by either: a responsible corporate officer for a corporation, by a general partner for a partnership, by the proprietor of a sole proprietorship, or by a principal executive or ranking elected official for a public agency.

PAPERWORK REDUCTION ACT NOTICE: The public reporting and recordkeeping burden for this collection of information is estimated to average between 6.0 and 7.9 hours per response, depending on the injection well class. Burden means the total time, effort, or financial resource expended by persons to generate, maintain, retain, or disclose or provide information to or for a Federal Agency. This includes the time needed to review instructions; develop, acquire, install, and utilize technology and systems for the purposes of collecting, validating, and verifying information, processing and maintaining information, and disclosing and providing information; adjust the existing ways to comply with any previously applicable instructions and requirements; train personnel to be able to respond to the collection of information; search data sources; complete and review the collection of information; and, transmit or otherwise disclose the information. An agency may not conduct or sponsor, and a person is not required to respond to, a collection of information unless it displays a currently valid OMB control number. Send comments on the Agency's need for this information, the accuracy of the provided burden estimates, and any suggested methods for minimizing respondent burden, including the use of automated collection techniques to Director, Collection Strategies Division, U.S. Environmental Protection Agency (2822), 1200 Pennsylvania Ave., NW., Washington, D.C. 20460. Include the OMB control number in any correspondence. Do not send the completed forms to this address.

AS-BUILT COREHOLE 156S

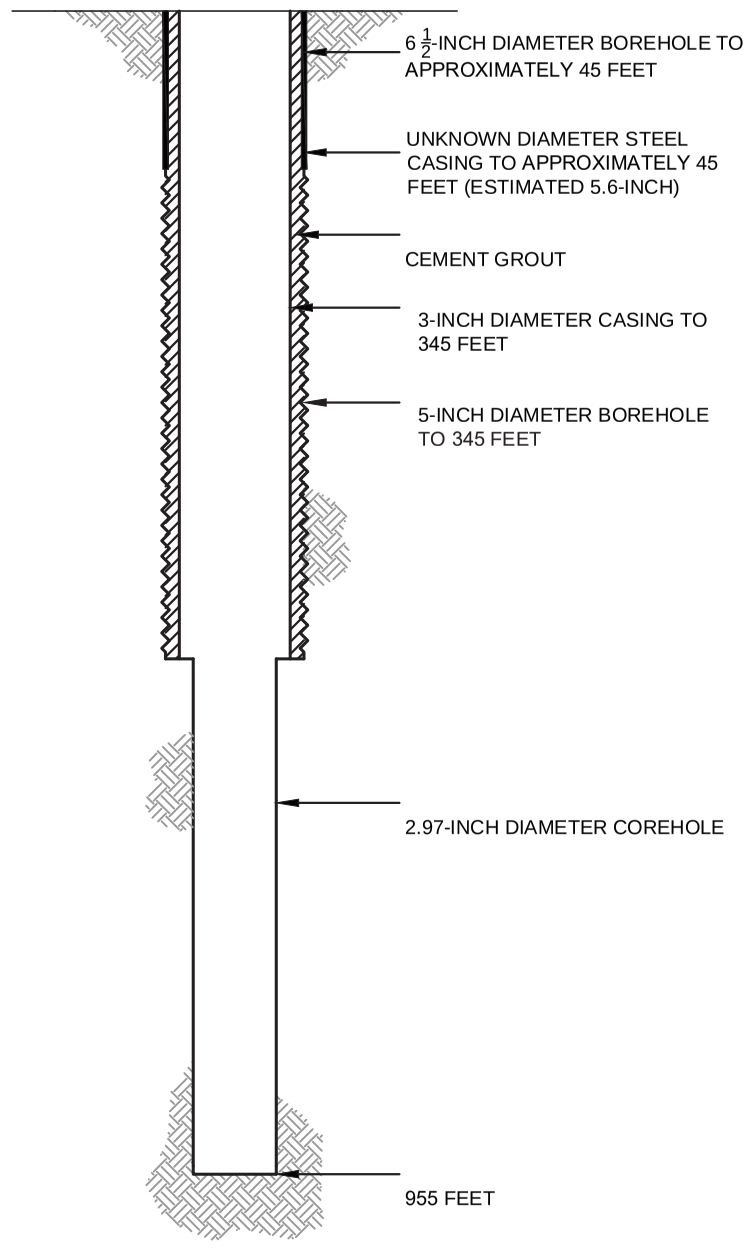

PROPOSED PLUGGING AND ABANDONMENT COREHOLE 156S

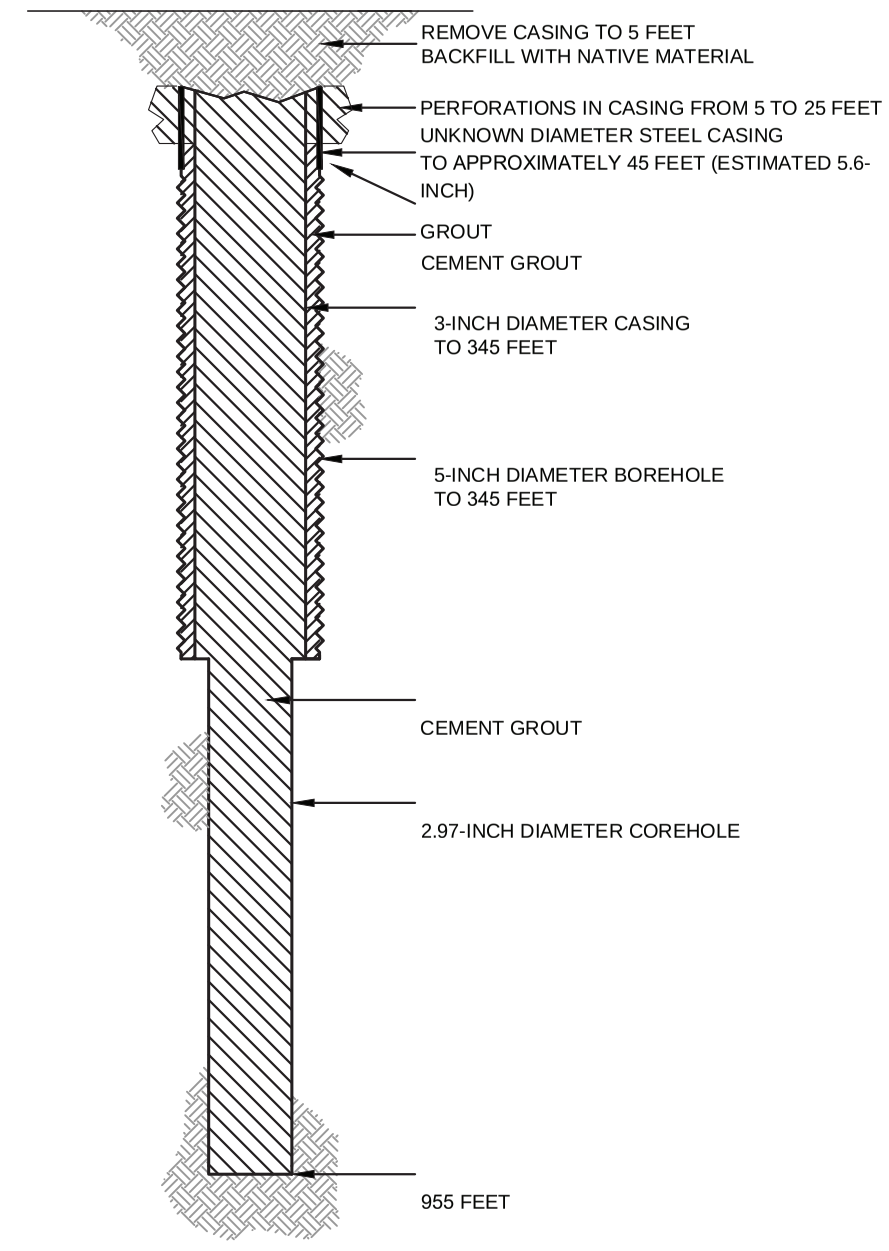

HALEY ALDRICH

FLORENCE COPPER, INC.
FLORENCE, ARIZONA

COREHOLE 156S DIAGRAM

FLORENCE COPPER INC.

NOT TO SCALE
SEPTEMBER 2019

FIGURE 1

MOBINI, GITA Printed: 4/21/2017 12:00 PM Layout: ABANDON (2)
G:\PROJECTS\CURIS RESOURCES\38706-CURIS FEASIBILITY\DRAWINGS\EPA\WELL ABANDON\415S_ABANDON.DWG

OMB No. 2040-0042 Approval Expires 4/30/2022

United States Environmental Protection Agency

WELL REWORK RECORD, PLUGGING AND ABANDONMENT PLAN, OR PLUGGING AND ABANDONMENT AFFIDAVIT

Name and Address, Phone Number and/or Email of Permittee

Florence Copper Project
1575 W Hunt Hwy,
Florence, AZ 85132

Permit or EPA ID Number	API Number	Full Well Name
R9UIC-AZ3-FY11-1		165MF

State	County
Arizona	Pinal

Locate well in two directions from nearest lines of quarter section and drilling unit

Surface Location

NW 1/4 of NW 1/4 of Section 33 Township 4S Range 9E

Latitude 33.0438169

Longitude -111.4362971

ft. from (N/S) Line of quarter section

ft. from (E/W) Line of quarter section.

Well Class	Timing of Action (pick one)	Type of Action (pick one)
☐ Class I ☐ Class II ☑ Class III ☐ Class V	☑ Notice Prior to Work Date Expected to Commence March 2021 ☐ Report After Work Date Work Ended	☐ Well Rework ☑ Plugging and Abandonment ☐ Conversion to a Non-Injection Well

Provide a narrative description of the work planned to be performed, or that was performed. Use additional pages as necessary. See instructions.

A workover rig capable of performing the required abandonment operations at the required depths will be moved in and set up over the core hole. The core hole will be inspected to determine the depth to which the hole remains open and if any obstructions are present in the core hole; the presence and condition of any existing collar will also be documented. If necessary, the core hole will be cleaned out to a depth of at least 100 feet below the bedrock-LBFU contact to enable placement of cement seals.

If collar is present, an attempt will be made to remove it. If removal of the collar is not feasible, it will be left in the hole and perforated as needed to allow an annular seal to be placed to a depth of at least 25 feet bgs. In areas of agricultural use, the surface casing will be cut at least 5 feet bgs and removed.

If the collar cannot be removed, it will be perforated from at least 20 feet below the bedrock-LBFU contact to at least 20 feet above the contact; from at least 20 feet below the base of the MFGU to at least 20 feet above the top of the MFGU; and from at least 25 feet bgs to 5 feet bgs.

A tremie pipe will be used to place Type V cement in the open core hole from the bottom of the core hole to the top of the core hole. Cement retainers, as described above, will be used to force cement grout into the annulus and behind perforated intervals, as necessary.

If the hole has been obstructed, as much cement as possible will be placed from 100 feet below the LBFU-bedrock contact to the top of the core hole.

The volume of Type V cement will be recorded and will not be less than the estimated volume of material required to fill each interval. All cement grout will consist of Type V cement, or equivalent approved in accordance with the UIC Permit.

Certification

I certify under the penalty of law that I have personally examined and am familiar with the information submitted in this document and all attachments and that, based on my inquiry of those individuals immediately responsible for obtaining the information, I believe that the information is true, accurate, and complete. I am aware that there are significant penalties for submitting false information, including the possibliity of fine and imprisonment. (Ref. 40 CFR § 144.32)

Name and Official Title *(Please type or print)*	Signature	Date Signed
Dan Johnson, VP - General Manager		10/3/2019

INSTRUCTIONS FOR FORM 7520-19

This form replaces forms 7520-12 and 7520-14. Use this form only when work is planned or has occurred that affects the well's construction or operation as an injection well, including work on the casing, tubing or packer (or for shallow Class V wells, the subsurface fluid emplacement network). Use one form per injection well. While reports or other information developed by contractors or service companies may be attached, this form must be signed by a responsible entity as described at 40 CFR 144.32. Note: operators closing Class V wells should use Form 7520-17.

NAME, ADDRESS, PHONE AND/OR EMAIL OF PERMITTEE: Enter the name and street address, city/town, state, and ZIP code of the permittee. Also provide an email address (if available) and/or a phone number.

PERMIT OR EPA ID NUMBER: Enter the well identification number or permit number assigned to the well by the EPA or the permitting authority.

API NUMBER: Enter the number assigned by the local jurisdiction (usually a State Oil and Gas Agency) using the American Petroleum Institute standard numbering system.

FULL WELL NAME: Enter the full name of the well or project.

Enter the **STATE** and **COUNTY** where the well is located. For States that do not have counties, use the name of that State's equivalent jurisdiction at a more local level.

WELL LOCATION: Fill in the complete township, range, and section to the nearest quarter-quarter section. A township is north or south of the baseline, and a range is east or west of the principal meridian (e.g., T12N, R34W). Also include the distance, in feet, from the nearest north or south line and nearest east or west line of the quarter-section. Also, enter the **latitude** and **longitude** of the well in decimal degrees, to five or six places if possible; be sure to include a negative sign for the longitude of a well in the Western Hemisphere and a negative sign for the latitude of a well in the Southern Hemisphere.

Enter the **WELL CLASS,** i.e., the class of injection well as defined in 40 CFR 144.6.

TIMING OF THE ACTION: Check ***Notice prior to work*** if the activity has not yet occurred (i.e., is planned). Check ***Report after work*** if the activity described has already occurred. As appropriate, include the date the activity is expected to start or the date the activity was completed. (Note this may not be available, e.g., for a plugging plan submitted with a permit application.)

TYPE OF ACTION: Check the appropriate box to describe the kind of activity being reported. Check ***Well Rework*** for work that was/will be performed on the well after it has already been in operation as an injection well. Check ***Plugging and Abandonment*** to report on plans for or descriptions of final closure/plugging after use as an injection well. Check ***Conversion to a Non-Injection Well*** if the well is to be converted to something other than an injection well.

Provide a **NARRATIVE DESCRIPTION** of the work planned to be performed, or that was performed. The narrative should include a description of the main procedures planned or that occurred during the work activity. A service company report, daily report, or similar document may be attached if it includes all the requested information and is clear and legible.

For well reworks, include the following information: The reason for the well rework; depths of activity; type of activity; changes to injection well configuration, well casing, or cement behind casing; any plug added to the well and its depth; any newly drilled interval and its depth; method(s) to demonstrate that the well has mechanical integrity (as applicable); and any deviations from the approved rework plan (as applicable).

For a well plugging plan, include the following information: Reason for the well plugging; number of plugs placed, and their depths; materials used as plugs (e.g., cast iron bridge plug, cement, cement retainer); method to set plugs; and wait-on-cement times, if any. Also provide one or more cost estimates from an independent firm in the business of plugging and abandoning wells to plug the well as described in the plan.

For well plugging affidavit, include the following information: Reason for the well plugging; number of plugs placed, and their depths; materials used as plugs (e.g., cast iron bridge plug, cement, cement retainer); method to set plugs; wait-on-cement times, if any; and any deviations from the approved plugging plan (if applicable).

For conversion to a non-injection well, include the following information: Depths of activity; type of activity; changes to injection well configuration, well casing, or cement behind casing; any plug added to the well and its depth; any newly drilled interval and its depth; depths of new perforations; and method(s) to demonstrate that the well has mechanical integrity (as applicable).

For all of the above activities, include a well sketch depicting the work, results of well tests/logging performed, service company tickets, and any other available information demonstrating how the work was/is to be performed. Also, specify whether depths are below ground surface, relative to Kelly bushing, etc.

CERTIFICATION: This form must be signed and dated by either: a responsible corporate officer for a corporation, by a general partner for a partnership, by the proprietor of a sole proprietorship, or by a principal executive or ranking elected official for a public agency.

PAPERWORK REDUCTION ACT NOTICE: The public reporting and recordkeeping burden for this collection of information is estimated to average between 6.0 and 7.9 hours per response, depending on the injection well class. Burden means the total time, effort, or financial resource expended by persons to generate, maintain, retain, or disclose or provide information to or for a Federal Agency. This includes the time needed to review instructions; develop, acquire, install, and utilize technology and systems for the purposes of collecting, validating, and verifying information, processing and maintaining information, and disclosing and providing information; adjust the existing ways to comply with any previously applicable instructions and requirements; train personnel to be able to respond to the collection of information; search data sources; complete and review the collection of information; and, transmit or otherwise disclose the information. An agency may not conduct or sponsor, and a person is not required to respond to, a collection of information unless it displays a currently valid OMB control number. Send comments on the Agency's need for this information, the accuracy of the provided burden estimates, and any suggested methods for minimizing respondent burden, including the use of automated collection techniques to Director, Collection Strategies Division, U.S. Environmental Protection Agency (2822), 1200 Pennsylvania Ave., NW., Washington, D.C. 20460. Include the OMB control number in any correspondence. Do not send the completed forms to this address.

AS-BUILT COREHOLE 165MF

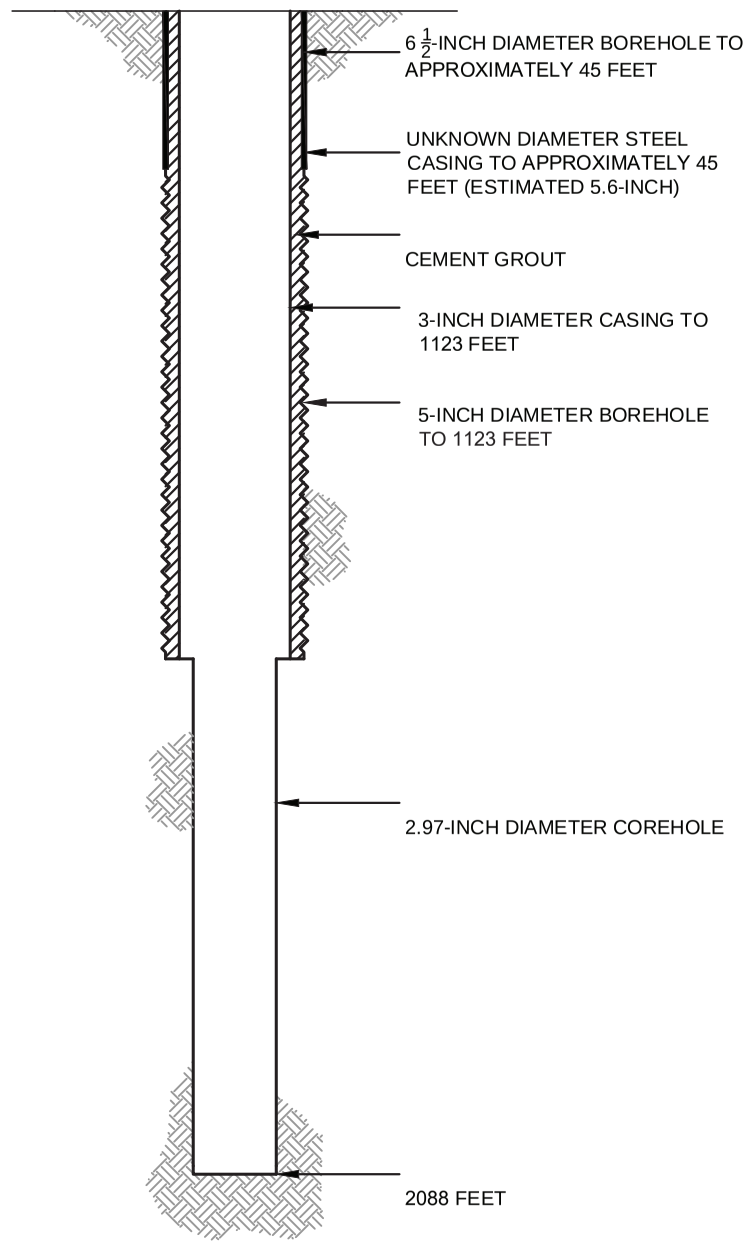

PROPOSED PLUGGING AND ABANDONMENT COREHOLE 165MF

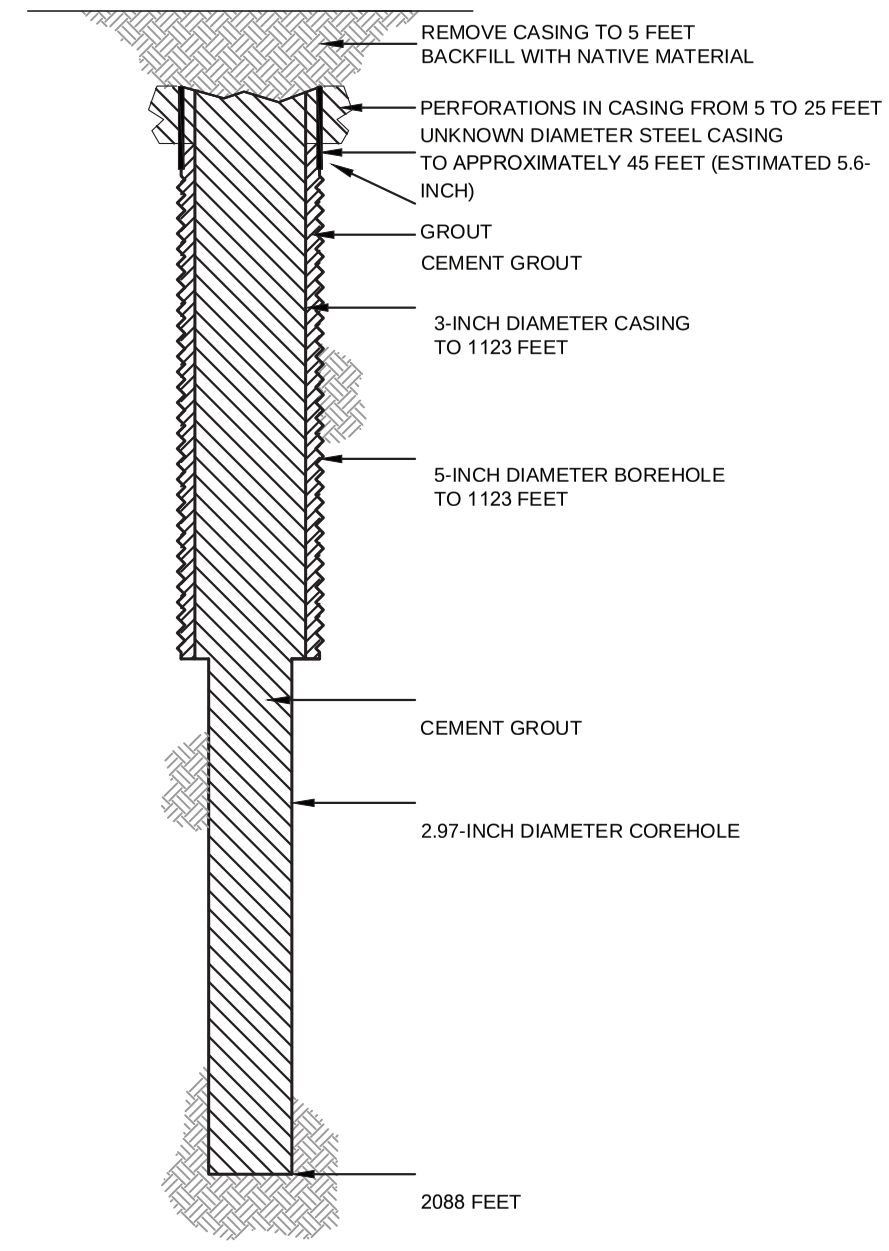

HALEY ALDRICH

FLORENCE COPPER, INC.
FLORENCE, ARIZONA

COREHOLE 165MF DIAGRAM

FLORENCE COPPER INC.

NOT TO SCALE
SEPTEMBER 2019

FIGURE 1

MOBINI, GITA Printed: 4/21/2017 12:00 PM Layout: ABANDON (2)
G:\PROJECTS\CURIS RESOURCES\38706-CURIS FEASIBILITY\DRAWINGS\EPA\WELL ABANDON\415S_ABANDON.DWG

OMB No. 2040-0042 Approval Expires 4/30/2022

United States Environmental Protection Agency

WELL REWORK RECORD, PLUGGING AND ABANDONMENT PLAN, OR PLUGGING AND ABANDONMENT AFFIDAVIT

Name and Address, Phone Number and/or Email of Permittee

Florence Copper Project
1575 W Hunt Hwy,
Florence, AZ 85132

Permit or EPA ID Number	API Number	Full Well Name
R9UIC-AZ3-FY11-1		210

State	County
Arizona	Pinal

Locate well in two directions from nearest lines of quarter section and drilling unit

Latitude 33.05510572

Longitude -111.4361483

Surface Location

SW **1/4 of** NW **1/4 of Section** 28 **Township** 4S **Range** 9E

_____ **ft. from (N/S)** _____ **Line of quarter section**

_____ **ft. from (E/W)** _____ **Line of quarter section.**

Well Class	Timing of Action (pick one)	Type of Action (pick one)
☐ Class I ☐ Class II ☑ Class III ☐ Class V	☑ Notice Prior to Work Date Expected to Commence March 2021 ☐ Report After Work Date Work Ended	☐ Well Rework ☑ Plugging and Abandonment ☐ Conversion to a Non-Injection Well

Provide a narrative description of the work planned to be performed, or that was performed. Use additional pages as necessary. See instructions.

A workover rig capable of performing the required abandonment operations at the required depths will be moved in and set up over the core hole. The core hole will be inspected to determine the depth to which the hole remains open and if any obstructions are present in the core hole; the presence and condition of any existing collar will also be documented. If necessary, the core hole will be cleaned out to a depth of at least 100 feet below the bedrock-LBFU contact to enable placement of cement seals.

If collar is present, an attempt will be made to remove it. If removal of the collar is not feasible, it will be left in the hole and perforated as needed to allow an annular seal to be placed to a depth of at least 25 feet bgs. In areas of agricultural use, the surface casing will be cut at least 5 feet bgs and removed.

If the collar cannot be removed, it will be perforated from at least 20 feet below the bedrock-LBFU contact to at least 20 feet above the contact; from at least 20 feet below the base of the MFGU to at least 20 feet above the top of the MFGU; and from at least 25 feet bgs to 5 feet bgs.

A tremie pipe will be used to place Type V cement in the open core hole from the bottom of the core hole to the top of the core hole. Cement retainers, as described above, will be used to force cement grout into the annulus and behind perforated intervals, as necessary.

If the hole has been obstructed, as much cement as possible will be placed from 100 feet below the LBFU-bedrock contact to the top of the core hole.

The volume of Type V cement will be recorded and will not be less than the estimated volume of material required to fill each interval. All cement grout will consist of Type V cement, or equivalent approved in accordance with the UIC Permit.

Certification

I certify under the penalty of law that I have personally examined and am familiar with the information submitted in this document and all attachments and that, based on my inquiry of those individuals immediately responsible for obtaining the information, I believe that the information is true, accurate, and complete. I am aware that there are significant penalties for submitting false information, including the possibliity of fine and imprisonment. (Ref. 40 CFR § 144.32)

Name and Official Title *(Please type or print)*	Signature	Date Signed
Dan Johnson, VP - General Manager		10/3/2019

INSTRUCTIONS FOR FORM 7520-19

This form replaces forms 7520-12 and 7520-14. Use this form only when work is planned or has occurred that affects the well's construction or operation as an injection well, including work on the casing, tubing or packer (or for shallow Class V wells, the subsurface fluid emplacement network). Use one form per injection well. While reports or other information developed by contractors or service companies may be attached, this form must be signed by a responsible entity as described at 40 CFR 144.32. Note: operators closing Class V wells should use Form 7520-17.

NAME, ADDRESS, PHONE AND/OR EMAIL OF PERMITTEE: Enter the name and street address, city/town, state, and ZIP code of the permittee. Also provide an email address (if available) and/or a phone number.

PERMIT OR EPA ID NUMBER: Enter the well identification number or permit number assigned to the well by the EPA or the permitting authority.

API NUMBER: Enter the number assigned by the local jurisdiction (usually a State Oil and Gas Agency) using the American Petroleum Institute standard numbering system.

FULL WELL NAME: Enter the full name of the well or project.

Enter the **STATE** and **COUNTY** where the well is located. For States that do not have counties, use the name of that State's equivalent jurisdiction at a more local level.

WELL LOCATION: Fill in the complete township, range, and section to the nearest quarter-quarter section. A township is north or south of the baseline, and a range is east or west of the principal meridian (e.g., T12N, R34W). Also include the distance, in feet, from the nearest north or south line and nearest east or west line of the quarter-section. Also, enter the **latitude** and **longitude** of the well in decimal degrees, to five or six places if possible; be sure to include a negative sign for the longitude of a well in the Western Hemisphere and a negative sign for the latitude of a well in the Southern Hemisphere.

Enter the **WELL CLASS,** i.e., the class of injection well as defined in 40 CFR 144.6.

TIMING OF THE ACTION: Check ***Notice prior to work*** if the activity has not yet occurred (i.e., is planned). Check ***Report after work*** if the activity described has already occurred. As appropriate, include the date the activity is expected to start or the date the activity was completed. (Note this may not be available, e.g., for a plugging plan submitted with a permit application.)

TYPE OF ACTION: Check the appropriate box to describe the kind of activity being reported. Check ***Well Rework*** for work that was/will be performed on the well after it has already been in operation as an injection well. Check ***Plugging and Abandonment*** to report on plans for or descriptions of final closure/plugging after use as an injection well. Check ***Conversion to a Non-Injection Well*** if the well is to be converted to something other than an injection well.

Provide a **NARRATIVE DESCRIPTION** of the work planned to be performed, or that was performed. The narrative should include a description of the main procedures planned or that occurred during the work activity. A service company report, daily report, or similar document may be attached if it includes all the requested information and is clear and legible.

For well reworks, include the following information: The reason for the well rework; depths of activity; type of activity; changes to injection well configuration, well casing, or cement behind casing; any plug added to the well and its depth; any newly drilled interval and its depth; method(s) to demonstrate that the well has mechanical integrity (as applicable); and any deviations from the approved rework plan (as applicable).

For a well plugging plan, include the following information: Reason for the well plugging; number of plugs placed, and their depths; materials used as plugs (e.g., cast iron bridge plug, cement, cement retainer); method to set plugs; and wait-on-cement times, if any. Also provide one or more cost estimates from an independent firm in the business of plugging and abandoning wells to plug the well as described in the plan.

For well plugging affidavit, include the following information: Reason for the well plugging; number of plugs placed, and their depths; materials used as plugs (e.g., cast iron bridge plug, cement, cement retainer); method to set plugs; wait-on-cement times, if any; and any deviations from the approved plugging plan (if applicable).

For conversion to a non-injection well, include the following information: Depths of activity; type of activity; changes to injection well configuration, well casing, or cement behind casing; any plug added to the well and its depth; any newly drilled interval and its depth; depths of new perforations; and method(s) to demonstrate that the well has mechanical integrity (as applicable).

For all of the above activities, include a well sketch depicting the work, results of well tests/logging performed, service company tickets, and any other available information demonstrating how the work was/is to be performed. Also, specify whether depths are below ground surface, relative to Kelly bushing, etc.

CERTIFICATION: This form must be signed and dated by either: a responsible corporate officer for a corporation, by a general partner for a partnership, by the proprietor of a sole proprietorship, or by a principal executive or ranking elected official for a public agency.

PAPERWORK REDUCTION ACT NOTICE: The public reporting and recordkeeping burden for this collection of information is estimated to average between 6.0 and 7.9 hours per response, depending on the injection well class. Burden means the total time, effort, or financial resource expended by persons to generate, maintain, retain, or disclose or provide information to or for a Federal Agency. This includes the time needed to review instructions; develop, acquire, install, and utilize technology and systems for the purposes of collecting, validating, and verifying information, processing and maintaining information, and disclosing and providing information; adjust the existing ways to comply with any previously applicable instructions and requirements; train personnel to be able to respond to the collection of information; search data sources; complete and review the collection of information; and, transmit or otherwise disclose the information. An agency may not conduct or sponsor, and a person is not required to respond to, a collection of information unless it displays a currently valid OMB control number. Send comments on the Agency's need for this information, the accuracy of the provided burden estimates, and any suggested methods for minimizing respondent burden, including the use of automated collection techniques to Director, Collection Strategies Division, U.S. Environmental Protection Agency (2822), 1200 Pennsylvania Ave., NW., Washington, D.C. 20460. Include the OMB control number in any correspondence. Do not send the completed forms to this address.

OMB No. 2040-0042 Approval Expires 4/30/2022

United States Environmental Protection Agency

WELL REWORK RECORD, PLUGGING AND ABANDONMENT PLAN, OR PLUGGING AND ABANDONMENT AFFIDAVIT

Name and Address, Phone Number and/or Email of Permittee

Florence Copper Project
1575 W Hunt Hwy,
Florence, AZ 85132

Permit or EPA ID Number	API Number	Full Well Name
R9UIC-AZ3-FY11-1		254S

State	County
Arizona	Pinal

Locate well in two directions from nearest lines of quarter section and drilling unit

Latitude 33.05152912

Longitude -111.429321

Surface Location

NW **1/4 of** SE **1/4 of Section** 28 **Township** 4S **Range** 9E

_____ **ft. from (N/S)** _____ **Line of quarter section**

_____ **ft. from (E/W)** _____ **Line of quarter section.**

Well Class	Timing of Action (pick one)	Type of Action (pick one)
☐ Class I ☐ Class II ☑ Class III ☐ Class V	☑ Notice Prior to Work Date Expected to Commence March 2021 ☐ Report After Work Date Work Ended	☐ Well Rework ☑ Plugging and Abandonment ☐ Conversion to a Non-Injection Well

Provide a narrative description of the work planned to be performed, or that was performed. Use additional pages as necessary. See instructions.

A workover rig capable of performing the required abandonment operations at the required depths will be moved in and set up over the core hole. The core hole will be inspected to determine the depth to which the hole remains open and if any obstructions are present in the core hole; the presence and condition of any existing collar will also be documented. If necessary, the core hole will be cleaned out to a depth of at least 100 feet below the bedrock-LBFU contact to enable placement of cement seals.

If collar is present, an attempt will be made to remove it. If removal of the collar is not feasible, it will be left in the hole and perforated as needed to allow an annular seal to be placed to a depth of at least 25 feet bgs. In areas of agricultural use, the surface casing will be cut at least 5 feet bgs and removed.

If the collar cannot be removed, it will be perforated from at least 20 feet below the bedrock-LBFU contact to at least 20 feet above the contact; from at least 20 feet below the base of the MFGU to at least 20 feet above the top of the MFGU; and from at least 25 feet bgs to 5 feet bgs.

A tremie pipe will be used to place Type V cement in the open core hole from the bottom of the core hole to the top of the core hole. Cement retainers, as described above, will be used to force cement grout into the annulus and behind perforated intervals, as necessary.

If the hole has been obstructed, as much cement as possible will be placed from 100 feet below the LBFU-bedrock contact to the top of the core hole.

The volume of Type V cement will be recorded and will not be less than the estimated volume of material required to fill each interval. All cement grout will consist of Type V cement, or equivalent approved in accordance with the UIC Permit.

Certification

I certify under the penalty of law that I have personally examined and am familiar with the information submitted in this document and all attachments and that, based on my inquiry of those individuals immediately responsible for obtaining the information, I believe that the information is true, accurate, and complete. I am aware that there are significant penalties for submitting false information, including the possibliity of fine and imprisonment. (Ref. 40 CFR § 144.32)

Name and Official Title *(Please type or print)*	Signature	Date Signed
Dan Johnson, VP - General Manager		10/3/2019

INSTRUCTIONS FOR FORM 7520-19

This form replaces forms 7520-12 and 7520-14. Use this form only when work is planned or has occurred that affects the well's construction or operation as an injection well, including work on the casing, tubing or packer (or for shallow Class V wells, the subsurface fluid emplacement network). Use one form per injection well. While reports or other information developed by contractors or service companies may be attached, this form must be signed by a responsible entity as described at 40 CFR 144.32. Note: operators closing Class V wells should use Form 7520-17.

NAME, ADDRESS, PHONE AND/OR EMAIL OF PERMITTEE: Enter the name and street address, city/town, state, and ZIP code of the permittee. Also provide an email address (if available) and/or a phone number.

PERMIT OR EPA ID NUMBER: Enter the well identification number or permit number assigned to the well by the EPA or the permitting authority.

API NUMBER: Enter the number assigned by the local jurisdiction (usually a State Oil and Gas Agency) using the American Petroleum Institute standard numbering system.

FULL WELL NAME: Enter the full name of the well or project.

Enter the **STATE** and **COUNTY** where the well is located. For States that do not have counties, use the name of that State's equivalent jurisdiction at a more local level.

WELL LOCATION: Fill in the complete township, range, and section to the nearest quarter-quarter section. A township is north or south of the baseline, and a range is east or west of the principal meridian (e.g., T12N, R34W). Also include the distance, in feet, from the nearest north or south line and nearest east or west line of the quarter-section. Also, enter the **latitude** and **longitude** of the well in decimal degrees, to five or six places if possible; be sure to include a negative sign for the longitude of a well in the Western Hemisphere and a negative sign for the latitude of a well in the Southern Hemisphere.

Enter the **WELL CLASS,** i.e., the class of injection well as defined in 40 CFR 144.6.

TIMING OF THE ACTION: Check ***Notice prior to work*** if the activity has not yet occurred (i.e., is planned). Check ***Report after work*** if the activity described has already occurred. As appropriate, include the date the activity is expected to start or the date the activity was completed. (Note this may not be available, e.g., for a plugging plan submitted with a permit application.)

TYPE OF ACTION: Check the appropriate box to describe the kind of activity being reported. Check ***Well Rework*** for work that was/will be performed on the well after it has already been in operation as an injection well. Check ***Plugging and Abandonment*** to report on plans for or descriptions of final closure/plugging after use as an injection well. Check ***Conversion to a Non-Injection Well*** if the well is to be converted to something other than an injection well.

Provide a **NARRATIVE DESCRIPTION** of the work planned to be performed, or that was performed. The narrative should include a description of the main procedures planned or that occurred during the work activity. A service company report, daily report, or similar document may be attached if it includes all the requested information and is clear and legible.

For well reworks, include the following information: The reason for the well rework; depths of activity; type of activity; changes to injection well configuration, well casing, or cement behind casing; any plug added to the well and its depth; any newly drilled interval and its depth; method(s) to demonstrate that the well has mechanical integrity (as applicable); and any deviations from the approved rework plan (as applicable).

For a well plugging plan, include the following information: Reason for the well plugging; number of plugs placed, and their depths; materials used as plugs (e.g., cast iron bridge plug, cement, cement retainer); method to set plugs; and wait-on-cement times, if any. Also provide one or more cost estimates from an independent firm in the business of plugging and abandoning wells to plug the well as described in the plan.

For well plugging affidavit, include the following information: Reason for the well plugging; number of plugs placed, and their depths; materials used as plugs (e.g., cast iron bridge plug, cement, cement retainer); method to set plugs; wait-on-cement times, if any; and any deviations from the approved plugging plan (if applicable).

For conversion to a non-injection well, include the following information: Depths of activity; type of activity; changes to injection well configuration, well casing, or cement behind casing; any plug added to the well and its depth; any newly drilled interval and its depth; depths of new perforations; and method(s) to demonstrate that the well has mechanical integrity (as applicable).

For all of the above activities, include a well sketch depicting the work, results of well tests/logging performed, service company tickets, and any other available information demonstrating how the work was/is to be performed. Also, specify whether depths are below ground surface, relative to Kelly bushing, etc.

CERTIFICATION: This form must be signed and dated by either: a responsible corporate officer for a corporation, by a general partner for a partnership, by the proprietor of a sole proprietorship, or by a principal executive or ranking elected official for a public agency.

PAPERWORK REDUCTION ACT NOTICE: The public reporting and recordkeeping burden for this collection of information is estimated to average between 6.0 and 7.9 hours per response, depending on the injection well class. Burden means the total time, effort, or financial resource expended by persons to generate, maintain, retain, or disclose or provide information to or for a Federal Agency. This includes the time needed to review instructions; develop, acquire, install, and utilize technology and systems for the purposes of collecting, validating, and verifying information, processing and maintaining information, and disclosing and providing information; adjust the existing ways to comply with any previously applicable instructions and requirements; train personnel to be able to respond to the collection of information; search data sources; complete and review the collection of information; and, transmit or otherwise disclose the information. An agency may not conduct or sponsor, and a person is not required to respond to, a collection of information unless it displays a currently valid OMB control number. Send comments on the Agency's need for this information, the accuracy of the provided burden estimates, and any suggested methods for minimizing respondent burden, including the use of automated collection techniques to Director, Collection Strategies Division, U.S. Environmental Protection Agency (2822), 1200 Pennsylvania Ave., NW., Washington, D.C. 20460. Include the OMB control number in any correspondence. Do not send the completed forms to this address.

AS-BUILT COREHOLE 254S

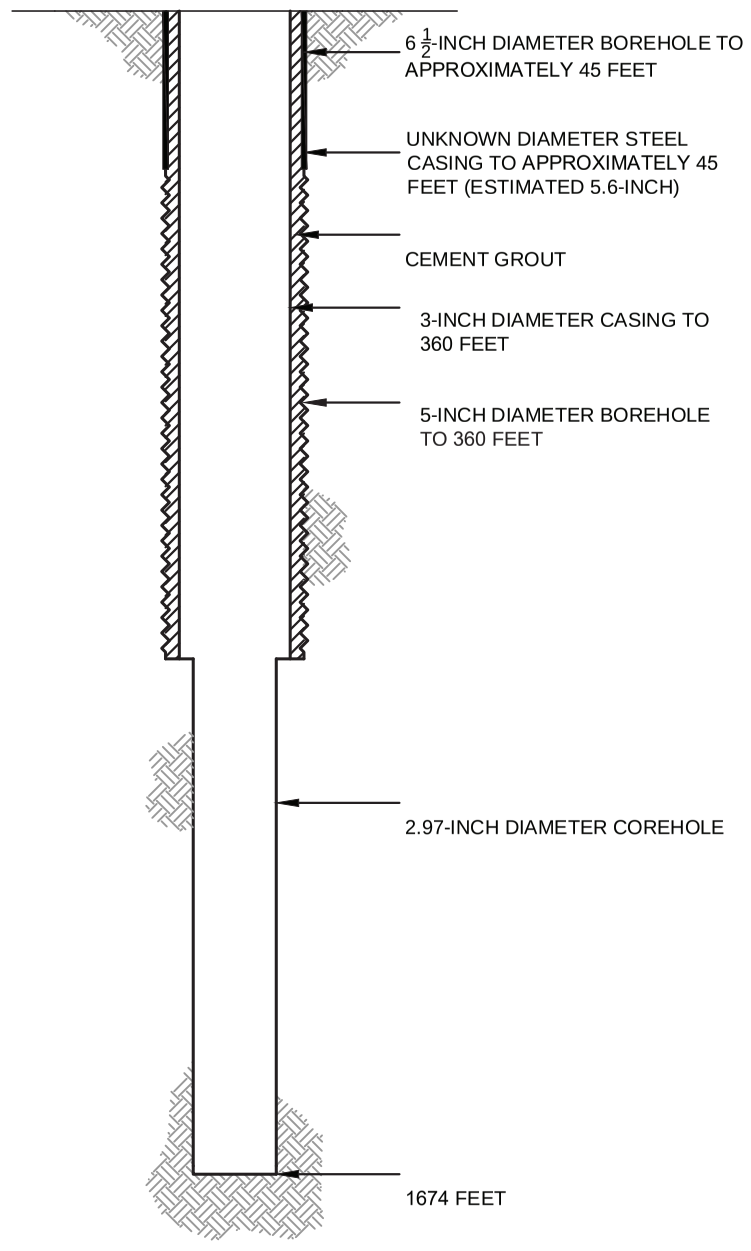

PROPOSED PLUGGING AND ABANDONMENT COREHOLE 254S

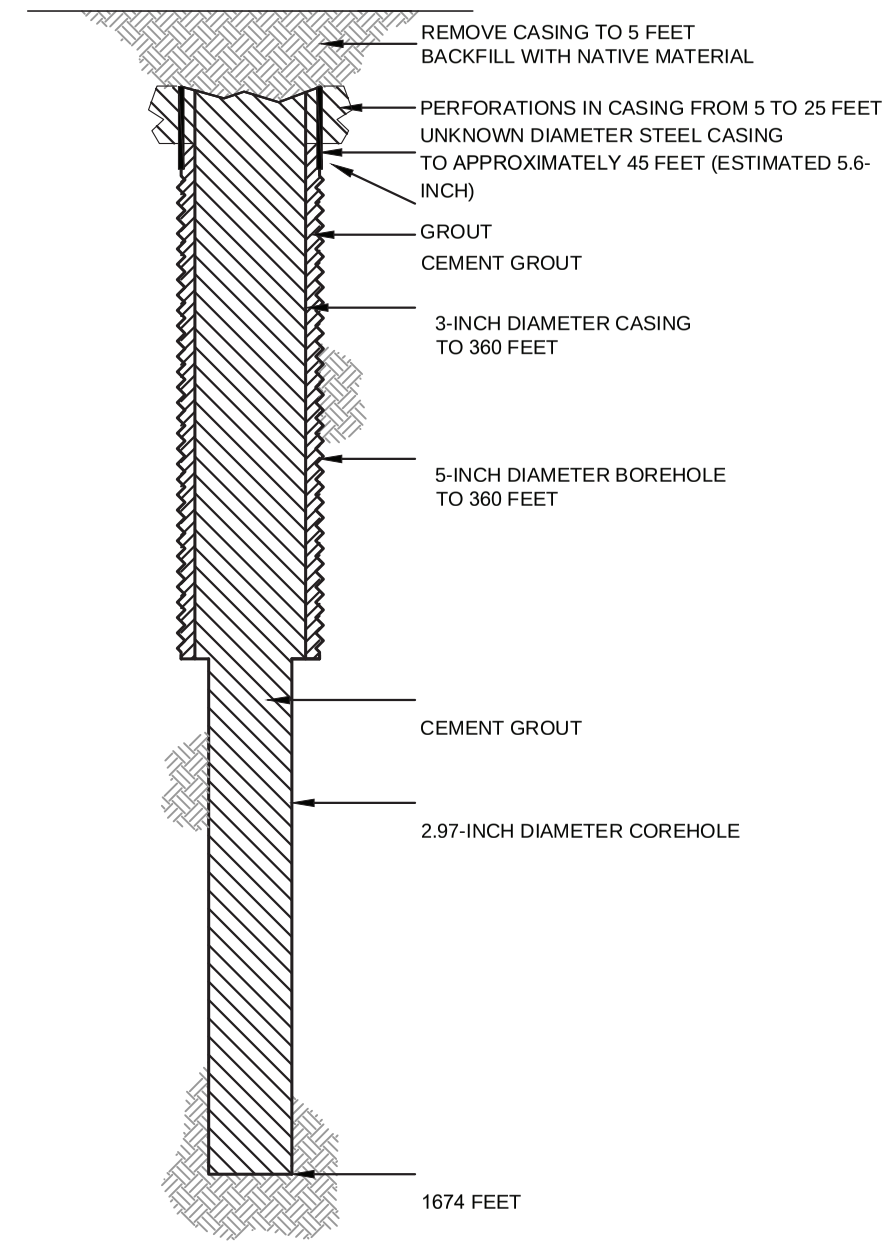

HALEY ALDRICH

FLORENCE COPPER, INC.
FLORENCE, ARIZONA

COREHOLE 254S DIAGRAM

FLORENCE COPPER INC.

NOT TO SCALE
SEPTEMBER 2019

FIGURE 1

MOBINI, GITA Printed: 4/21/2017 12:00 PM Layout: ABANDON (2)
G:\PROJECTS\CURIS RESOURCES\38706-CURIS FEASIBILITY\DRAWINGS\EPA\WELL ABANDON\415S_ABANDON.DWG

OMB No. 2040-0042 Approval Expires 4/30/2022

United States Environmental Protection Agency

WELL REWORK RECORD, PLUGGING AND ABANDONMENT PLAN, OR PLUGGING AND ABANDONMENT AFFIDAVIT

Name and Address, Phone Number and/or Email of Permittee

Florence Copper Project
1575 W Hunt Hwy,
Florence, AZ 85132

Permit or EPA ID Number	API Number	Full Well Name
R9UIC-AZ3-FY11-1		255S

State	County
Arizona	Pinal

Locate well in two directions from nearest lines of quarter section and drilling unit

Latitude 33.05212212

Longitude -111.4289313

Surface Location

NW **1/4 of** SE **1/4 of Section** 28 **Township** 4S **Range** 9E

_____ **ft. from (N/S)** _____ **Line of quarter section**

_____ **ft. from (E/W)** _____ **Line of quarter section.**

Well Class	Timing of Action (pick one)	Type of Action (pick one)
☐ Class I ☐ Class II ☑ Class III ☐ Class V	☑ Notice Prior to Work Date Expected to Commence March 2021 ☐ Report After Work Date Work Ended	☐ Well Rework ☑ Plugging and Abandonment ☐ Conversion to a Non-Injection Well

Provide a narrative description of the work planned to be performed, or that was performed. Use additional pages as necessary. See instructions.

A workover rig capable of performing the required abandonment operations at the required depths will be moved in and set up over the core hole. The core hole will be inspected to determine the depth to which the hole remains open and if any obstructions are present in the core hole; the presence and condition of any existing collar will also be documented. If necessary, the core hole will be cleaned out to a depth of at least 100 feet below the bedrock-LBFU contact to enable placement of cement seals.

If collar is present, an attempt will be made to remove it. If removal of the collar is not feasible, it will be left in the hole and perforated as needed to allow an annular seal to be placed to a depth of at least 25 feet bgs. In areas of agricultural use, the surface casing will be cut at least 5 feet bgs and removed.

If the collar cannot be removed, it will be perforated from at least 20 feet below the bedrock-LBFU contact to at least 20 feet above the contact; from at least 20 feet below the base of the MFGU to at least 20 feet above the top of the MFGU; and from at least 25 feet bgs to 5 feet bgs.

A tremie pipe will be used to place Type V cement in the open core hole from the bottom of the core hole to the top of the core hole. Cement retainers, as described above, will be used to force cement grout into the annulus and behind perforated intervals, as necessary.

If the hole has been obstructed, as much cement as possible will be placed from 100 feet below the LBFU-bedrock contact to the top of the core hole.

The volume of Type V cement will be recorded and will not be less than the estimated volume of material required to fill each interval. All cement grout will consist of Type V cement, or equivalent approved in accordance with the UIC Permit.

Certification

I certify under the penalty of law that I have personally examined and am familiar with the information submitted in this document and all attachments and that, based on my inquiry of those individuals immediately responsible for obtaining the information, I believe that the information is true, accurate, and complete. I am aware that there are significant penalties for submitting false information, including the possibliity of fine and imprisonment. (Ref. 40 CFR § 144.32)

Name and Official Title *(Please type or print)*	Signature	Date Signed
Dan Johnson, VP - General Manager		10/3/2019

INSTRUCTIONS FOR FORM 7520-19

This form replaces forms 7520-12 and 7520-14. Use this form only when work is planned or has occurred that affects the well's construction or operation as an injection well, including work on the casing, tubing or packer (or for shallow Class V wells, the subsurface fluid emplacement network). Use one form per injection well. While reports or other information developed by contractors or service companies may be attached, this form must be signed by a responsible entity as described at 40 CFR 144.32. Note: operators closing Class V wells should use Form 7520-17.

NAME, ADDRESS, PHONE AND/OR EMAIL OF PERMITTEE: Enter the name and street address, city/town, state, and ZIP code of the permittee. Also provide an email address (if available) and/or a phone number.

PERMIT OR EPA ID NUMBER: Enter the well identification number or permit number assigned to the well by the EPA or the permitting authority.

API NUMBER: Enter the number assigned by the local jurisdiction (usually a State Oil and Gas Agency) using the American Petroleum Institute standard numbering system.

FULL WELL NAME: Enter the full name of the well or project.

Enter the **STATE** and **COUNTY** where the well is located. For States that do not have counties, use the name of that State's equivalent jurisdiction at a more local level.

WELL LOCATION: Fill in the complete township, range, and section to the nearest quarter-quarter section. A township is north or south of the baseline, and a range is east or west of the principal meridian (e.g., T12N, R34W). Also include the distance, in feet, from the nearest north or south line and nearest east or west line of the quarter-section. Also, enter the **latitude** and **longitude** of the well in decimal degrees, to five or six places if possible; be sure to include a negative sign for the longitude of a well in the Western Hemisphere and a negative sign for the latitude of a well in the Southern Hemisphere.

Enter the **WELL CLASS,** i.e., the class of injection well as defined in 40 CFR 144.6.

TIMING OF THE ACTION: Check ***Notice prior to work*** if the activity has not yet occurred (i.e., is planned). Check ***Report after work*** if the activity described has already occurred. As appropriate, include the date the activity is expected to start or the date the activity was completed. (Note this may not be available, e.g., for a plugging plan submitted with a permit application.)

TYPE OF ACTION: Check the appropriate box to describe the kind of activity being reported. Check ***Well Rework*** for work that was/will be performed on the well after it has already been in operation as an injection well. Check ***Plugging and Abandonment*** to report on plans for or descriptions of final closure/plugging after use as an injection well. Check ***Conversion to a Non-Injection Well*** if the well is to be converted to something other than an injection well.

Provide a **NARRATIVE DESCRIPTION** of the work planned to be performed, or that was performed. The narrative should include a description of the main procedures planned or that occurred during the work activity. A service company report, daily report, or similar document may be attached if it includes all the requested information and is clear and legible.

For well reworks, include the following information: The reason for the well rework; depths of activity; type of activity; changes to injection well configuration, well casing, or cement behind casing; any plug added to the well and its depth; any newly drilled interval and its depth; method(s) to demonstrate that the well has mechanical integrity (as applicable); and any deviations from the approved rework plan (as applicable).

For a well plugging plan, include the following information: Reason for the well plugging; number of plugs placed, and their depths; materials used as plugs (e.g., cast iron bridge plug, cement, cement retainer); method to set plugs; and wait-on-cement times, if any. Also provide one or more cost estimates from an independent firm in the business of plugging and abandoning wells to plug the well as described in the plan.

For well plugging affidavit, include the following information: Reason for the well plugging; number of plugs placed, and their depths; materials used as plugs (e.g., cast iron bridge plug, cement, cement retainer); method to set plugs; wait-on-cement times, if any; and any deviations from the approved plugging plan (if applicable).

For conversion to a non-injection well, include the following information: Depths of activity; type of activity; changes to injection well configuration, well casing, or cement behind casing; any plug added to the well and its depth; any newly drilled interval and its depth; depths of new perforations; and method(s) to demonstrate that the well has mechanical integrity (as applicable).

For all of the above activities, include a well sketch depicting the work, results of well tests/logging performed, service company tickets, and any other available information demonstrating how the work was/is to be performed. Also, specify whether depths are below ground surface, relative to Kelly bushing, etc.

CERTIFICATION: This form must be signed and dated by either: a responsible corporate officer for a corporation, by a general partner for a partnership, by the proprietor of a sole proprietorship, or by a principal executive or ranking elected official for a public agency.

PAPERWORK REDUCTION ACT NOTICE: The public reporting and recordkeeping burden for this collection of information is estimated to average between 6.0 and 7.9 hours per response, depending on the injection well class. Burden means the total time, effort, or financial resource expended by persons to generate, maintain, retain, or disclose or provide information to or for a Federal Agency. This includes the time needed to review instructions; develop, acquire, install, and utilize technology and systems for the purposes of collecting, validating, and verifying information, processing and maintaining information, and disclosing and providing information; adjust the existing ways to comply with any previously applicable instructions and requirements; train personnel to be able to respond to the collection of information; search data sources; complete and review the collection of information; and, transmit or otherwise disclose the information. An agency may not conduct or sponsor, and a person is not required to respond to, a collection of information unless it displays a currently valid OMB control number. Send comments on the Agency's need for this information, the accuracy of the provided burden estimates, and any suggested methods for minimizing respondent burden, including the use of automated collection techniques to Director, Collection Strategies Division, U.S. Environmental Protection Agency (2822), 1200 Pennsylvania Ave., NW., Washington, D.C. 20460. Include the OMB control number in any correspondence. Do not send the completed forms to this address.

AS-BUILT COREHOLE 255S

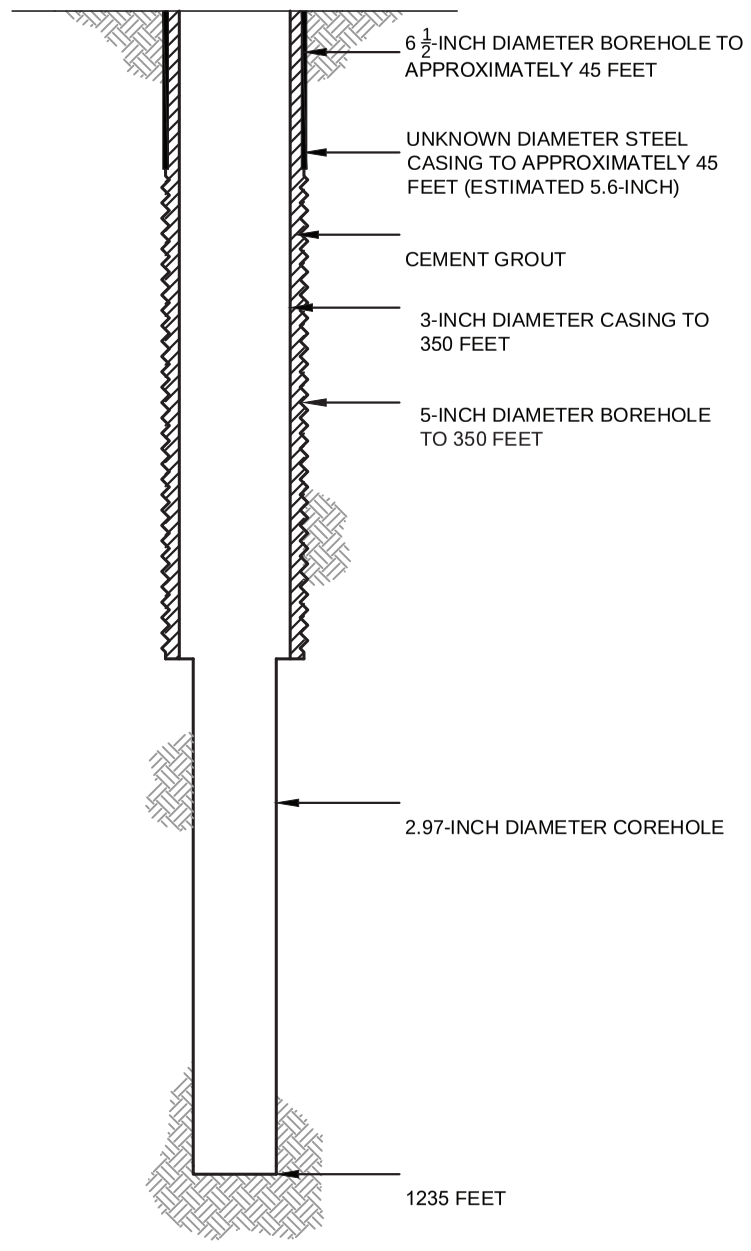

PROPOSED PLUGGING AND ABANDONMENT COREHOLE 255S

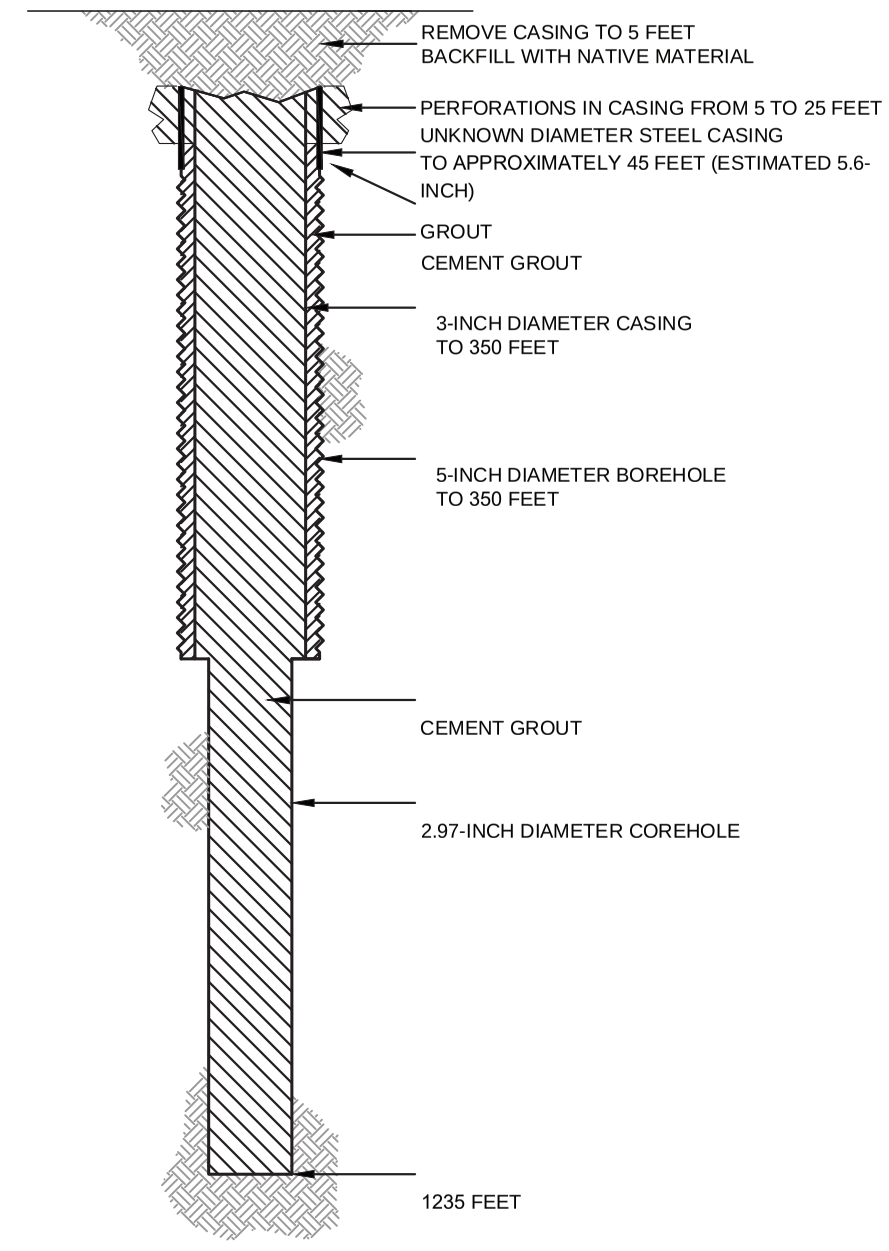

HALEY ALDRICH

FLORENCE COPPER, INC.
FLORENCE, ARIZONA

COREHOLE 255S DIAGRAM

FLORENCE COPPER INC.

NOT TO SCALE
SEPTEMBER 2019

FIGURE 1

MOBINI, GITA Printed: 4/21/2017 12:00 PM Layout: ABANDON (2)
G:\PROJECTS\CURIS RESOURCES\38706-CURIS FEASIBILITY\DRAWINGS\EPA\WELL ABANDON\415S_ABANDON.DWG

OMB No. 2040-0042 Approval Expires 4/30/2022

United States Environmental Protection Agency

WELL REWORK RECORD, PLUGGING AND ABANDONMENT PLAN, OR PLUGGING AND ABANDONMENT AFFIDAVIT

Name and Address, Phone Number and/or Email of Permittee

Florence Copper Project
1575 W Hunt Hwy,
Florence, AZ 85132

Permit or EPA ID Number	API Number	Full Well Name
R9UIC-AZ3-FY11-1		256S

State	County
Arizona	Pinal

Locate well in two directions from nearest lines of quarter section and drilling unit

Latitude 33.05092867

Longitude -111.4289291

Surface Location

NW **1/4 of** SE **1/4 of Section** 28 **Township** 4S **Range** 9E

_____ **ft. from (N/S)** _____ **Line of quarter section**

_____ **ft. from (E/W)** _____ **Line of quarter section.**

Well Class	Timing of Action (pick one)	Type of Action (pick one)
☐ Class I ☐ Class II ☑ Class III ☐ Class V	☑ Notice Prior to Work Date Expected to Commence March 2021 ☐ Report After Work Date Work Ended	☐ Well Rework ☑ Plugging and Abandonment ☐ Conversion to a Non-Injection Well

Provide a narrative description of the work planned to be performed, or that was performed. Use additional pages as necessary. See instructions.

A workover rig capable of performing the required abandonment operations at the required depths will be moved in and set up over the core hole. The core hole will be inspected to determine the depth to which the hole remains open and if any obstructions are present in the core hole; the presence and condition of any existing collar will also be documented. If necessary, the core hole will be cleaned out to a depth of at least 100 feet below the bedrock-LBFU contact to enable placement of cement seals.

If collar is present, an attempt will be made to remove it. If removal of the collar is not feasible, it will be left in the hole and perforated as needed to allow an annular seal to be placed to a depth of at least 25 feet bgs. In areas of agricultural use, the surface casing will be cut at least 5 feet bgs and removed.

If the collar cannot be removed, it will be perforated from at least 20 feet below the bedrock-LBFU contact to at least 20 feet above the contact; from at least 20 feet below the base of the MFGU to at least 20 feet above the top of the MFGU; and from at least 25 feet bgs to 5 feet bgs.

A tremie pipe will be used to place Type V cement in the open core hole from the bottom of the core hole to the top of the core hole. Cement retainers, as described above, will be used to force cement grout into the annulus and behind perforated intervals, as necessary.

If the hole has been obstructed, as much cement as possible will be placed from 100 feet below the LBFU-bedrock contact to the top of the core hole.

The volume of Type V cement will be recorded and will not be less than the estimated volume of material required to fill each interval. All cement grout will consist of Type V cement, or equivalent approved in accordance with the UIC Permit.

Certification

I certify under the penalty of law that I have personally examined and am familiar with the information submitted in this document and all attachments and that, based on my inquiry of those individuals immediately responsible for obtaining the information, I believe that the information is true, accurate, and complete. I am aware that there are significant penalties for submitting false information, including the possibliity of fine and imprisonment. (Ref. 40 CFR § 144.32)

Name and Official Title *(Please type or print)*	Signature	Date Signed
Dan Johnson, VP - General Manager		10/3/2019

INSTRUCTIONS FOR FORM 7520-19

This form replaces forms 7520-12 and 7520-14. Use this form only when work is planned or has occurred that affects the well's construction or operation as an injection well, including work on the casing, tubing or packer (or for shallow Class V wells, the subsurface fluid emplacement network). Use one form per injection well. While reports or other information developed by contractors or service companies may be attached, this form must be signed by a responsible entity as described at 40 CFR 144.32. Note: operators closing Class V wells should use Form 7520-17.

NAME, ADDRESS, PHONE AND/OR EMAIL OF PERMITTEE: Enter the name and street address, city/town, state, and ZIP code of the permittee. Also provide an email address (if available) and/or a phone number.

PERMIT OR EPA ID NUMBER: Enter the well identification number or permit number assigned to the well by the EPA or the permitting authority.

API NUMBER: Enter the number assigned by the local jurisdiction (usually a State Oil and Gas Agency) using the American Petroleum Institute standard numbering system.

FULL WELL NAME: Enter the full name of the well or project.

Enter the **STATE** and **COUNTY** where the well is located. For States that do not have counties, use the name of that State's equivalent jurisdiction at a more local level.

WELL LOCATION: Fill in the complete township, range, and section to the nearest quarter-quarter section. A township is north or south of the baseline, and a range is east or west of the principal meridian (e.g., T12N, R34W). Also include the distance, in feet, from the nearest north or south line and nearest east or west line of the quarter-section. Also, enter the **latitude** and **longitude** of the well in decimal degrees, to five or six places if possible; be sure to include a negative sign for the longitude of a well in the Western Hemisphere and a negative sign for the latitude of a well in the Southern Hemisphere.

Enter the **WELL CLASS,** i.e., the class of injection well as defined in 40 CFR 144.6.

TIMING OF THE ACTION: Check ***Notice prior to work*** if the activity has not yet occurred (i.e., is planned). Check ***Report after work*** if the activity described has already occurred. As appropriate, include the date the activity is expected to start or the date the activity was completed. (Note this may not be available, e.g., for a plugging plan submitted with a permit application.)

TYPE OF ACTION: Check the appropriate box to describe the kind of activity being reported. Check ***Well Rework*** for work that was/will be performed on the well after it has already been in operation as an injection well. Check ***Plugging and Abandonment*** to report on plans for or descriptions of final closure/plugging after use as an injection well. Check ***Conversion to a Non-Injection Well*** if the well is to be converted to something other than an injection well.

Provide a **NARRATIVE DESCRIPTION** of the work planned to be performed, or that was performed. The narrative should include a description of the main procedures planned or that occurred during the work activity. A service company report, daily report, or similar document may be attached if it includes all the requested information and is clear and legible.

For well reworks, include the following information: The reason for the well rework; depths of activity; type of activity; changes to injection well configuration, well casing, or cement behind casing; any plug added to the well and its depth; any newly drilled interval and its depth; method(s) to demonstrate that the well has mechanical integrity (as applicable); and any deviations from the approved rework plan (as applicable).

For a well plugging plan, include the following information: Reason for the well plugging; number of plugs placed, and their depths; materials used as plugs (e.g., cast iron bridge plug, cement, cement retainer); method to set plugs; and wait-on-cement times, if any. Also provide one or more cost estimates from an independent firm in the business of plugging and abandoning wells to plug the well as described in the plan.

For well plugging affidavit, include the following information: Reason for the well plugging; number of plugs placed, and their depths; materials used as plugs (e.g., cast iron bridge plug, cement, cement retainer); method to set plugs; wait-on-cement times, if any; and any deviations from the approved plugging plan (if applicable).

For conversion to a non-injection well, include the following information: Depths of activity; type of activity; changes to injection well configuration, well casing, or cement behind casing; any plug added to the well and its depth; any newly drilled interval and its depth; depths of new perforations; and method(s) to demonstrate that the well has mechanical integrity (as applicable).

For all of the above activities, include a well sketch depicting the work, results of well tests/logging performed, service company tickets, and any other available information demonstrating how the work was/is to be performed. Also, specify whether depths are below ground surface, relative to Kelly bushing, etc.

CERTIFICATION: This form must be signed and dated by either: a responsible corporate officer for a corporation, by a general partner for a partnership, by the proprietor of a sole proprietorship, or by a principal executive or ranking elected official for a public agency.

PAPERWORK REDUCTION ACT NOTICE: The public reporting and recordkeeping burden for this collection of information is estimated to average between 6.0 and 7.9 hours per response, depending on the injection well class. Burden means the total time, effort, or financial resource expended by persons to generate, maintain, retain, or disclose or provide information to or for a Federal Agency. This includes the time needed to review instructions; develop, acquire, install, and utilize technology and systems for the purposes of collecting, validating, and verifying information, processing and maintaining information, and disclosing and providing information; adjust the existing ways to comply with any previously applicable instructions and requirements; train personnel to be able to respond to the collection of information; search data sources; complete and review the collection of information; and, transmit or otherwise disclose the information. An agency may not conduct or sponsor, and a person is not required to respond to, a collection of information unless it displays a currently valid OMB control number. Send comments on the Agency's need for this information, the accuracy of the provided burden estimates, and any suggested methods for minimizing respondent burden, including the use of automated collection techniques to Director, Collection Strategies Division, U.S. Environmental Protection Agency (2822), 1200 Pennsylvania Ave., NW., Washington, D.C. 20460. Include the OMB control number in any correspondence. Do not send the completed forms to this address.

AS-BUILT COREHOLE 256S

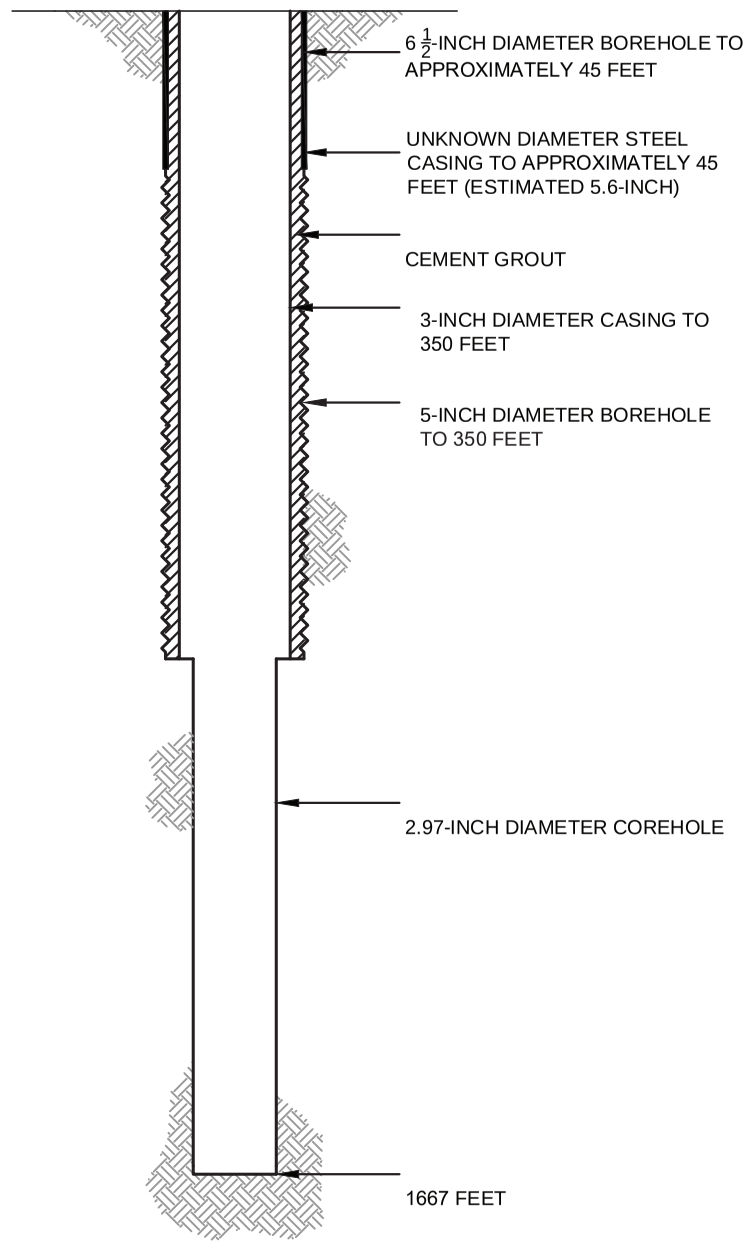

PROPOSED PLUGGING AND ABANDONMENT COREHOLE 256S

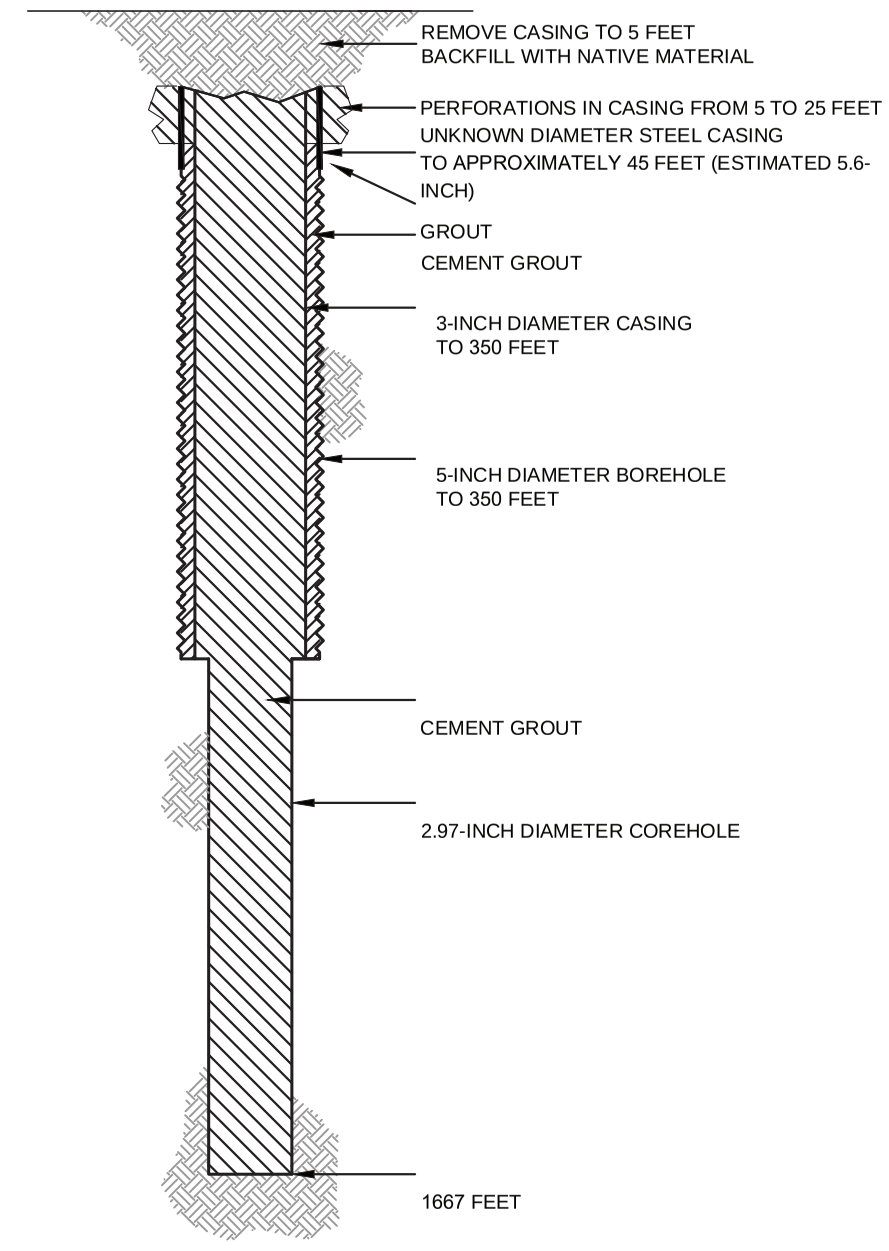

HALEY ALDRICH

FLORENCE COPPER, INC.
FLORENCE, ARIZONA

COREHOLE 256S DIAGRAM

FLORENCE COPPER INC.

NOT TO SCALE
SEPTEMBER 2019

FIGURE 1

MOBINI, GITA Printed: 4/21/2017 12:00 PM Layout: ABANDON (2)
G:\PROJECTS\CURIS RESOURCES\38706-CURIS FEASIBILITY\DRAWINGS\EPA\WELL ABANDON\415S_ABANDON.DWG

OMB No. 2040-0042 Approval Expires 4/30/2022

United States Environmental Protection Agency

EPA

WELL REWORK RECORD, PLUGGING AND ABANDONMENT PLAN, OR PLUGGING AND ABANDONMENT AFFIDAVIT

Name and Address, Phone Number and/or Email of Permittee

Florence Copper Project
1575 W Hunt Hwy,
Florence, AZ 85132

Permit or EPA ID Number	API Number	Full Well Name
R9UIC-AZ3-FY11-1		257S

State	County
Arizona	Pinal

Locate well in two directions from nearest lines of quarter section and drilling unit

Latitude 33.05033156

Longitude -111.4293246

Surface Location

NW **1/4 of** SE **1/4 of Section** 28 **Township** 4S **Range** 9E

_____ **ft. from (N/S)** _____ **Line of quarter section**

_____ **ft. from (E/W)** _____ **Line of quarter section.**

Well Class	Timing of Action (pick one)	Type of Action (pick one)
☐ Class I ☐ Class II ☑ Class III ☐ Class V	☑ Notice Prior to Work Date Expected to Commence March 2021 ☐ Report After Work Date Work Ended	☐ Well Rework ☑ Plugging and Abandonment ☐ Conversion to a Non-Injection Well

Provide a narrative description of the work planned to be performed, or that was performed. Use additional pages as necessary. See instructions.

A workover rig capable of performing the required abandonment operations at the required depths will be moved in and set up over the core hole. The core hole will be inspected to determine the depth to which the hole remains open and if any obstructions are present in the core hole; the presence and condition of any existing collar will also be documented. If necessary, the core hole will be cleaned out to a depth of at least 100 feet below the bedrock-LBFU contact to enable placement of cement seals.

If collar is present, an attempt will be made to remove it. If removal of the collar is not feasible, it will be left in the hole and perforated as needed to allow an annular seal to be placed to a depth of at least 25 feet bgs. In areas of agricultural use, the surface casing will be cut at least 5 feet bgs and removed.

If the collar cannot be removed, it will be perforated from at least 20 feet below the bedrock-LBFU contact to at least 20 feet above the contact; from at least 20 feet below the base of the MFGU to at least 20 feet above the top of the MFGU; and from at least 25 feet bgs to 5 feet bgs.

A tremie pipe will be used to place Type V cement in the open core hole from the bottom of the core hole to the top of the core hole. Cement retainers, as described above, will be used to force cement grout into the annulus and behind perforated intervals, as necessary.

If the hole has been obstructed, as much cement as possible will be placed from 100 feet below the LBFU-bedrock contact to the top of the core hole.

The volume of Type V cement will be recorded and will not be less than the estimated volume of material required to fill each interval. All cement grout will consist of Type V cement, or equivalent approved in accordance with the UIC Permit.

Certification

I certify under the penalty of law that I have personally examined and am familiar with the information submitted in this document and all attachments and that, based on my inquiry of those individuals immediately responsible for obtaining the information, I believe that the information is true, accurate, and complete. I am aware that there are significant penalties for submitting false information, including the possibliity of fine and imprisonment. (Ref. 40 CFR § 144.32)

Name and Official Title *(Please type or print)*	Signature	Date Signed
Dan Johnson, VP - General Manager		10/3/2019

INSTRUCTIONS FOR FORM 7520-19

This form replaces forms 7520-12 and 7520-14. Use this form only when work is planned or has occurred that affects the well's construction or operation as an injection well, including work on the casing, tubing or packer (or for shallow Class V wells, the subsurface fluid emplacement network). Use one form per injection well. While reports or other information developed by contractors or service companies may be attached, this form must be signed by a responsible entity as described at 40 CFR 144.32. Note: operators closing Class V wells should use Form 7520-17.

NAME, ADDRESS, PHONE AND/OR EMAIL OF PERMITTEE: Enter the name and street address, city/town, state, and ZIP code of the permittee. Also provide an email address (if available) and/or a phone number.

PERMIT OR EPA ID NUMBER: Enter the well identification number or permit number assigned to the well by the EPA or the permitting authority.

API NUMBER: Enter the number assigned by the local jurisdiction (usually a State Oil and Gas Agency) using the American Petroleum Institute standard numbering system.

FULL WELL NAME: Enter the full name of the well or project.

Enter the **STATE** and **COUNTY** where the well is located. For States that do not have counties, use the name of that State's equivalent jurisdiction at a more local level.

WELL LOCATION: Fill in the complete township, range, and section to the nearest quarter-quarter section. A township is north or south of the baseline, and a range is east or west of the principal meridian (e.g., T12N, R34W). Also include the distance, in feet, from the nearest north or south line and nearest east or west line of the quarter-section. Also, enter the **latitude** and **longitude** of the well in decimal degrees, to five or six places if possible; be sure to include a negative sign for the longitude of a well in the Western Hemisphere and a negative sign for the latitude of a well in the Southern Hemisphere.

Enter the **WELL CLASS,** i.e., the class of injection well as defined in 40 CFR 144.6.

TIMING OF THE ACTION: Check ***Notice prior to work*** if the activity has not yet occurred (i.e., is planned). Check ***Report after work*** if the activity described has already occurred. As appropriate, include the date the activity is expected to start or the date the activity was completed. (Note this may not be available, e.g., for a plugging plan submitted with a permit application.)

TYPE OF ACTION: Check the appropriate box to describe the kind of activity being reported. Check ***Well Rework*** for work that was/will be performed on the well after it has already been in operation as an injection well. Check ***Plugging and Abandonment*** to report on plans for or descriptions of final closure/plugging after use as an injection well. Check ***Conversion to a Non-Injection Well*** if the well is to be converted to something other than an injection well.

Provide a **NARRATIVE DESCRIPTION** of the work planned to be performed, or that was performed. The narrative should include a description of the main procedures planned or that occurred during the work activity. A service company report, daily report, or similar document may be attached if it includes all the requested information and is clear and legible.

For well reworks, include the following information: The reason for the well rework; depths of activity; type of activity; changes to injection well configuration, well casing, or cement behind casing; any plug added to the well and its depth; any newly drilled interval and its depth; method(s) to demonstrate that the well has mechanical integrity (as applicable); and any deviations from the approved rework plan (as applicable).

For a well plugging plan, include the following information: Reason for the well plugging; number of plugs placed, and their depths; materials used as plugs (e.g., cast iron bridge plug, cement, cement retainer); method to set plugs; and wait-on-cement times, if any. Also provide one or more cost estimates from an independent firm in the business of plugging and abandoning wells to plug the well as described in the plan.

For well plugging affidavit, include the following information: Reason for the well plugging; number of plugs placed, and their depths; materials used as plugs (e.g., cast iron bridge plug, cement, cement retainer); method to set plugs; wait-on-cement times, if any; and any deviations from the approved plugging plan (if applicable).

For conversion to a non-injection well, include the following information: Depths of activity; type of activity; changes to injection well configuration, well casing, or cement behind casing; any plug added to the well and its depth; any newly drilled interval and its depth; depths of new perforations; and method(s) to demonstrate that the well has mechanical integrity (as applicable).

For all of the above activities, include a well sketch depicting the work, results of well tests/logging performed, service company tickets, and any other available information demonstrating how the work was/is to be performed. Also, specify whether depths are below ground surface, relative to Kelly bushing, etc.

CERTIFICATION: This form must be signed and dated by either: a responsible corporate officer for a corporation, by a general partner for a partnership, by the proprietor of a sole proprietorship, or by a principal executive or ranking elected official for a public agency.

PAPERWORK REDUCTION ACT NOTICE: The public reporting and recordkeeping burden for this collection of information is estimated to average between 6.0 and 7.9 hours per response, depending on the injection well class. Burden means the total time, effort, or financial resource expended by persons to generate, maintain, retain, or disclose or provide information to or for a Federal Agency. This includes the time needed to review instructions; develop, acquire, install, and utilize technology and systems for the purposes of collecting, validating, and verifying information, processing and maintaining information, and disclosing and providing information; adjust the existing ways to comply with any previously applicable instructions and requirements; train personnel to be able to respond to the collection of information; search data sources; complete and review the collection of information; and, transmit or otherwise disclose the information. An agency may not conduct or sponsor, and a person is not required to respond to, a collection of information unless it displays a currently valid OMB control number. Send comments on the Agency's need for this information, the accuracy of the provided burden estimates, and any suggested methods for minimizing respondent burden, including the use of automated collection techniques to Director, Collection Strategies Division, U.S. Environmental Protection Agency (2822), 1200 Pennsylvania Ave., NW., Washington, D.C. 20460. Include the OMB control number in any correspondence. Do not send the completed forms to this address.

AS-BUILT COREHOLE 257S

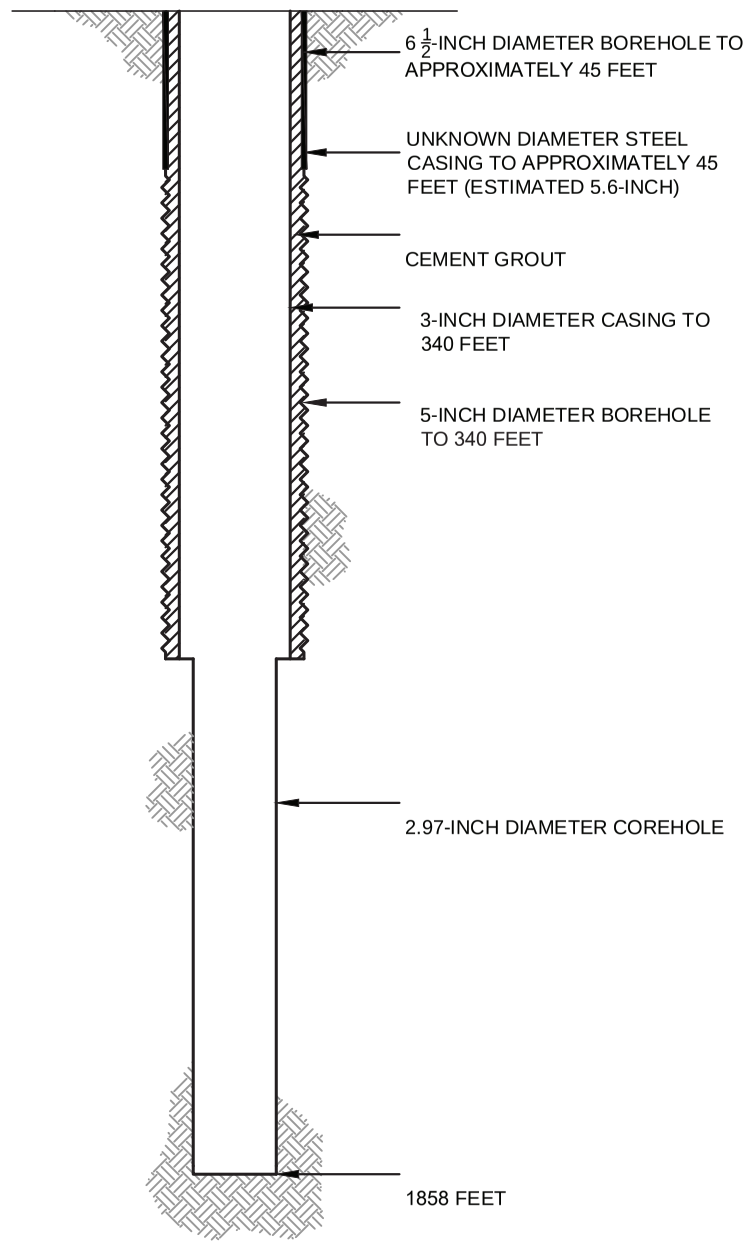

PROPOSED PLUGGING AND ABANDONMENT COREHOLE 257S

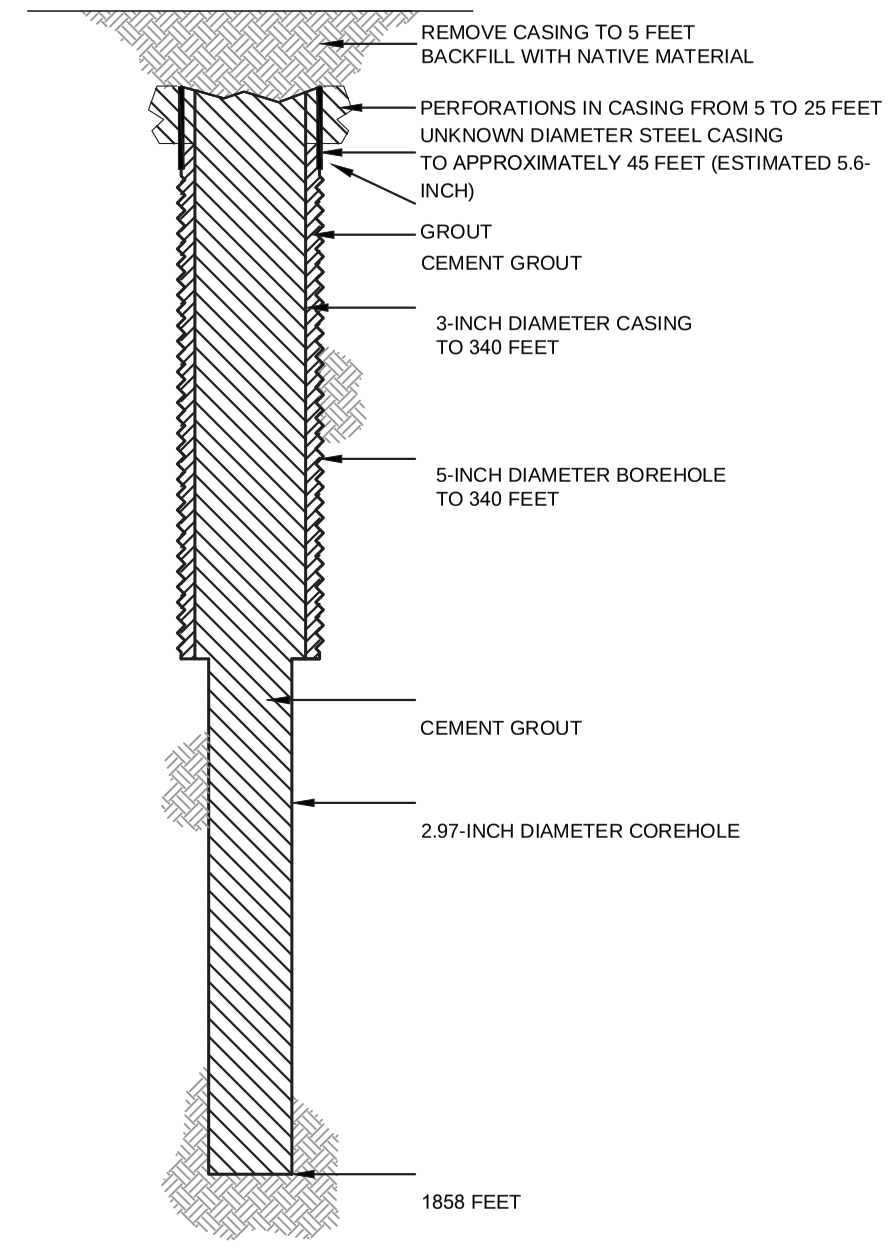

HALEY ALDRICH

FLORENCE COPPER, INC.
FLORENCE, ARIZONA

COREHOLE 257S DIAGRAM

FLORENCE COPPER INC.

NOT TO SCALE
SEPTEMBER 2019

FIGURE 1

MOBINI, GITA Printed: 4/21/2017 12:00 PM Layout: ABANDON (2)
G:\PROJECTS\CURIS RESOURCES\38706-CURIS FEASIBILITY\DRAWINGS\EPA\WELL ABANDON\415S_ABANDON.DWG

OMB No. 2040-0042 Approval Expires 4/30/2022

United States Environmental Protection Agency

WELL REWORK RECORD, PLUGGING AND ABANDONMENT PLAN, OR PLUGGING AND ABANDONMENT AFFIDAVIT

Name and Address, Phone Number and/or Email of Permittee

Florence Copper Project
1575 W Hunt Hwy,
Florence, AZ 85132

Permit or EPA ID Number	API Number	Full Well Name
R9UIC-AZ3-FY11-1		258S

State	County
Arizona	Pinal

Locate well in two directions from nearest lines of quarter section and drilling unit

Latitude 33.05151768

Longitude -111.4268913

Surface Location

NW **1/4 of** SE **1/4 of Section** 28 **Township** 4S **Range** 9E

_____ **ft. from (N/S)** _____ **Line of quarter section**

_____ **ft. from (E/W)** _____ **Line of quarter section.**

Well Class	Timing of Action (pick one)	Type of Action (pick one)
☐ Class I ☐ Class II ☑ Class III ☐ Class V	☑ Notice Prior to Work Date Expected to Commence March 2021 ☐ Report After Work Date Work Ended	☐ Well Rework ☑ Plugging and Abandonment ☐ Conversion to a Non-Injection Well

Provide a narrative description of the work planned to be performed, or that was performed. Use additional pages as necessary. See instructions.

A workover rig capable of performing the required abandonment operations at the required depths will be moved in and set up over the core hole. The core hole will be inspected to determine the depth to which the hole remains open and if any obstructions are present in the core hole; the presence and condition of any existing collar will also be documented. If necessary, the core hole will be cleaned out to a depth of at least 100 feet below the bedrock-LBFU contact to enable placement of cement seals.

If collar is present, an attempt will be made to remove it. If removal of the collar is not feasible, it will be left in the hole and perforated as needed to allow an annular seal to be placed to a depth of at least 25 feet bgs. In areas of agricultural use, the surface casing will be cut at least 5 feet bgs and removed.

If the collar cannot be removed, it will be perforated from at least 20 feet below the bedrock-LBFU contact to at least 20 feet above the contact; from at least 20 feet below the base of the MFGU to at least 20 feet above the top of the MFGU; and from at least 25 feet bgs to 5 feet bgs.

A tremie pipe will be used to place Type V cement in the open core hole from the bottom of the core hole to the top of the core hole. Cement retainers, as described above, will be used to force cement grout into the annulus and behind perforated intervals, as necessary.

If the hole has been obstructed, as much cement as possible will be placed from 100 feet below the LBFU-bedrock contact to the top of the core hole.

The volume of Type V cement will be recorded and will not be less than the estimated volume of material required to fill each interval. All cement grout will consist of Type V cement, or equivalent approved in accordance with the UIC Permit.

Certification

I certify under the penalty of law that I have personally examined and am familiar with the information submitted in this document and all attachments and that, based on my inquiry of those individuals immediately responsible for obtaining the information, I believe that the information is true, accurate, and complete. I am aware that there are significant penalties for submitting false information, including the possibliity of fine and imprisonment. (Ref. 40 CFR § 144.32)

Name and Official Title *(Please type or print)*	Signature	Date Signed
Dan Johnson, VP - General Manager		10/3/2019

INSTRUCTIONS FOR FORM 7520-19

This form replaces forms 7520-12 and 7520-14. Use this form only when work is planned or has occurred that affects the well's construction or operation as an injection well, including work on the casing, tubing or packer (or for shallow Class V wells, the subsurface fluid emplacement network). Use one form per injection well. While reports or other information developed by contractors or service companies may be attached, this form must be signed by a responsible entity as described at 40 CFR 144.32. Note: operators closing Class V wells should use Form 7520-17.

NAME, ADDRESS, PHONE AND/OR EMAIL OF PERMITTEE: Enter the name and street address, city/town, state, and ZIP code of the permittee. Also provide an email address (if available) and/or a phone number.

PERMIT OR EPA ID NUMBER: Enter the well identification number or permit number assigned to the well by the EPA or the permitting authority.

API NUMBER: Enter the number assigned by the local jurisdiction (usually a State Oil and Gas Agency) using the American Petroleum Institute standard numbering system.

FULL WELL NAME: Enter the full name of the well or project.

Enter the **STATE** and **COUNTY** where the well is located. For States that do not have counties, use the name of that State's equivalent jurisdiction at a more local level.

WELL LOCATION: Fill in the complete township, range, and section to the nearest quarter-quarter section. A township is north or south of the baseline, and a range is east or west of the principal meridian (e.g., T12N, R34W). Also include the distance, in feet, from the nearest north or south line and nearest east or west line of the quarter-section. Also, enter the **latitude** and **longitude** of the well in decimal degrees, to five or six places if possible; be sure to include a negative sign for the longitude of a well in the Western Hemisphere and a negative sign for the latitude of a well in the Southern Hemisphere.

Enter the **WELL CLASS,** i.e., the class of injection well as defined in 40 CFR 144.6.

TIMING OF THE ACTION: Check ***Notice prior to work*** if the activity has not yet occurred (i.e., is planned). Check ***Report after work*** if the activity described has already occurred. As appropriate, include the date the activity is expected to start or the date the activity was completed. (Note this may not be available, e.g., for a plugging plan submitted with a permit application.)

TYPE OF ACTION: Check the appropriate box to describe the kind of activity being reported. Check ***Well Rework*** for work that was/will be performed on the well after it has already been in operation as an injection well. Check ***Plugging and Abandonment*** to report on plans for or descriptions of final closure/plugging after use as an injection well. Check ***Conversion to a Non-Injection Well*** if the well is to be converted to something other than an injection well.

Provide a **NARRATIVE DESCRIPTION** of the work planned to be performed, or that was performed. The narrative should include a description of the main procedures planned or that occurred during the work activity. A service company report, daily report, or similar document may be attached if it includes all the requested information and is clear and legible.

For well reworks, include the following information: The reason for the well rework; depths of activity; type of activity; changes to injection well configuration, well casing, or cement behind casing; any plug added to the well and its depth; any newly drilled interval and its depth; method(s) to demonstrate that the well has mechanical integrity (as applicable); and any deviations from the approved rework plan (as applicable).

For a well plugging plan, include the following information: Reason for the well plugging; number of plugs placed, and their depths; materials used as plugs (e.g., cast iron bridge plug, cement, cement retainer); method to set plugs; and wait-on-cement times, if any. Also provide one or more cost estimates from an independent firm in the business of plugging and abandoning wells to plug the well as described in the plan.

For well plugging affidavit, include the following information: Reason for the well plugging; number of plugs placed, and their depths; materials used as plugs (e.g., cast iron bridge plug, cement, cement retainer); method to set plugs; wait-on-cement times, if any; and any deviations from the approved plugging plan (if applicable).

For conversion to a non-injection well, include the following information: Depths of activity; type of activity; changes to injection well configuration, well casing, or cement behind casing; any plug added to the well and its depth; any newly drilled interval and its depth; depths of new perforations; and method(s) to demonstrate that the well has mechanical integrity (as applicable).

For all of the above activities, include a well sketch depicting the work, results of well tests/logging performed, service company tickets, and any other available information demonstrating how the work was/is to be performed. Also, specify whether depths are below ground surface, relative to Kelly bushing, etc.

CERTIFICATION: This form must be signed and dated by either: a responsible corporate officer for a corporation, by a general partner for a partnership, by the proprietor of a sole proprietorship, or by a principal executive or ranking elected official for a public agency.

PAPERWORK REDUCTION ACT NOTICE: The public reporting and recordkeeping burden for this collection of information is estimated to average between 6.0 and 7.9 hours per response, depending on the injection well class. Burden means the total time, effort, or financial resource expended by persons to generate, maintain, retain, or disclose or provide information to or for a Federal Agency. This includes the time needed to review instructions; develop, acquire, install, and utilize technology and systems for the purposes of collecting, validating, and verifying information, processing and maintaining information, and disclosing and providing information; adjust the existing ways to comply with any previously applicable instructions and requirements; train personnel to be able to respond to the collection of information; search data sources; complete and review the collection of information; and, transmit or otherwise disclose the information. An agency may not conduct or sponsor, and a person is not required to respond to, a collection of information unless it displays a currently valid OMB control number. Send comments on the Agency's need for this information, the accuracy of the provided burden estimates, and any suggested methods for minimizing respondent burden, including the use of automated collection techniques to Director, Collection Strategies Division, U.S. Environmental Protection Agency (2822), 1200 Pennsylvania Ave., NW., Washington, D.C. 20460. Include the OMB control number in any correspondence. Do not send the completed forms to this address.

AS-BUILT COREHOLE 258S

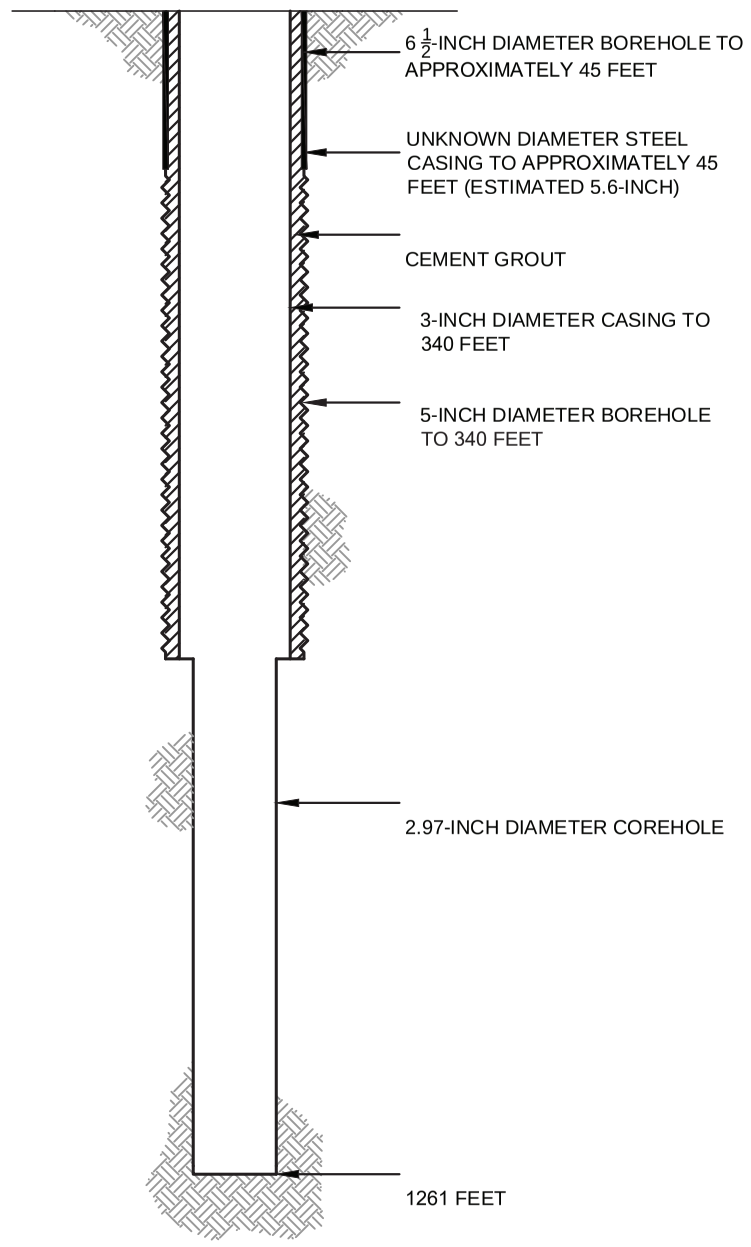

PROPOSED PLUGGING AND ABANDONMENT COREHOLE 258S

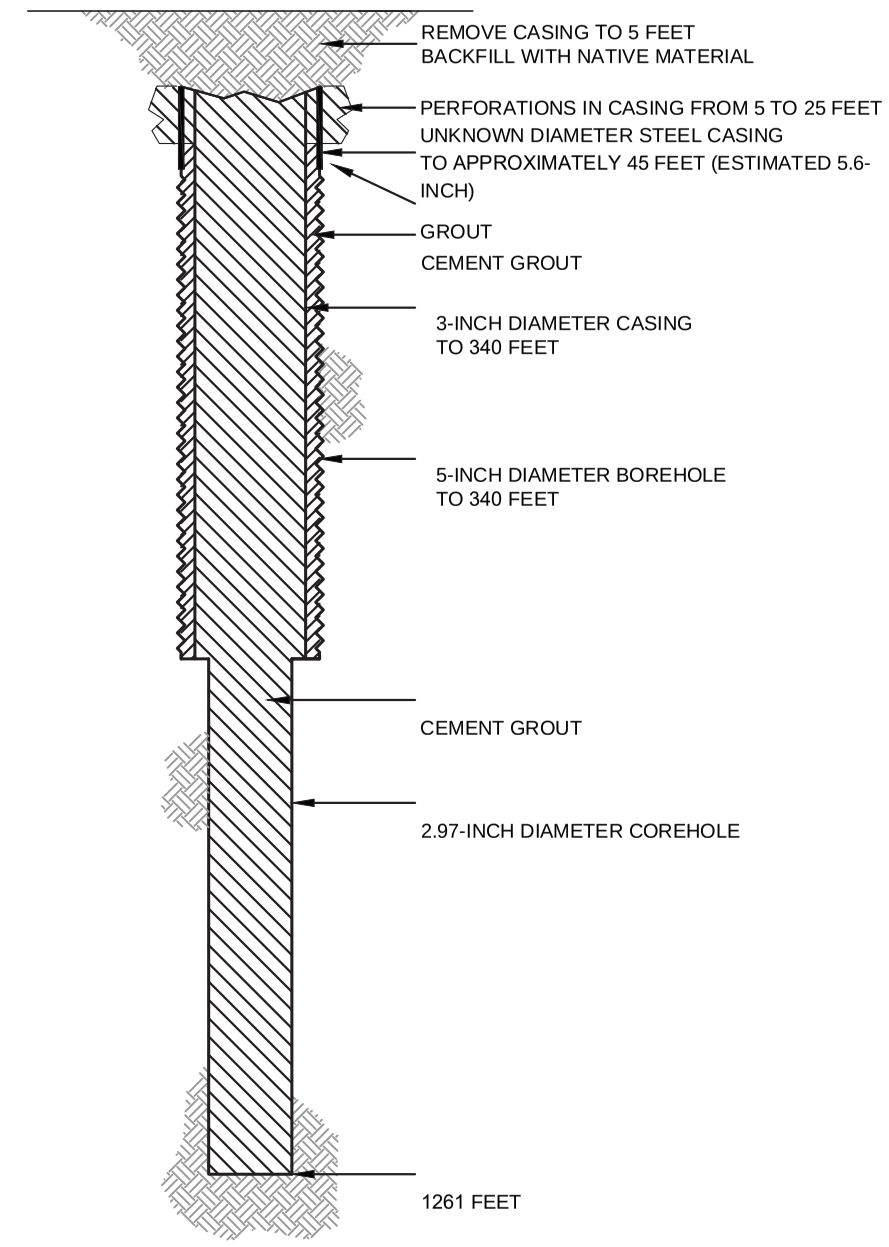

HALEY ALDRICH

FLORENCE COPPER, INC.
FLORENCE, ARIZONA

COREHOLE 258S DIAGRAM

FLORENCE COPPER INC.

NOT TO SCALE
SEPTEMBER 2019

FIGURE 1

MOBINI, GITA Printed: 4/21/2017 12:00 PM Layout: ABANDON (2)
G:\PROJECTS\CURIS RESOURCES\38706-CURIS FEASIBILITY\DRAWINGS\EPA\WELL ABANDON\415S_ABANDON.DWG

OMB No. 2040-0042 Approval Expires 4/30/2022

United States Environmental Protection Agency

WELL REWORK RECORD, PLUGGING AND ABANDONMENT PLAN, OR PLUGGING AND ABANDONMENT AFFIDAVIT

Name and Address, Phone Number and/or Email of Permittee

Florence Copper Project
1575 W Hunt Hwy,
Florence, AZ 85132

Permit or EPA ID Number	API Number	Full Well Name
R9UIC-AZ3-FY11-1		259S

State	County
Arizona	Pinal

Locate well in two directions from nearest lines of quarter section and drilling unit

Latitude 33.05091876

Longitude -111.427311

Surface Location

NW **1/4 of** SE **1/4 of Section** 28 **Township** 4S **Range** 9E

_____ **ft. from (N/S)** _____ **Line of quarter section**

_____ **ft. from (E/W)** _____ **Line of quarter section.**

Well Class	Timing of Action (pick one)	Type of Action (pick one)
☐ Class I ☐ Class II ☑ Class III ☐ Class V	☑ Notice Prior to Work Date Expected to Commence March 2021 ☐ Report After Work Date Work Ended	☐ Well Rework ☑ Plugging and Abandonment ☐ Conversion to a Non-Injection Well

Provide a narrative description of the work planned to be performed, or that was performed. Use additional pages as necessary. See instructions.

A workover rig capable of performing the required abandonment operations at the required depths will be moved in and set up over the core hole. The core hole will be inspected to determine the depth to which the hole remains open and if any obstructions are present in the core hole; the presence and condition of any existing collar will also be documented. If necessary, the core hole will be cleaned out to a depth of at least 100 feet below the bedrock-LBFU contact to enable placement of cement seals.

If collar is present, an attempt will be made to remove it. If removal of the collar is not feasible, it will be left in the hole and perforated as needed to allow an annular seal to be placed to a depth of at least 25 feet bgs. In areas of agricultural use, the surface casing will be cut at least 5 feet bgs and removed.

If the collar cannot be removed, it will be perforated from at least 20 feet below the bedrock-LBFU contact to at least 20 feet above the contact; from at least 20 feet below the base of the MFGU to at least 20 feet above the top of the MFGU; and from at least 25 feet bgs to 5 feet bgs.

A tremie pipe will be used to place Type V cement in the open core hole from the bottom of the core hole to the top of the core hole. Cement retainers, as described above, will be used to force cement grout into the annulus and behind perforated intervals, as necessary.

If the hole has been obstructed, as much cement as possible will be placed from 100 feet below the LBFU-bedrock contact to the top of the core hole.

The volume of Type V cement will be recorded and will not be less than the estimated volume of material required to fill each interval. All cement grout will consist of Type V cement, or equivalent approved in accordance with the UIC Permit.

Certification

I certify under the penalty of law that I have personally examined and am familiar with the information submitted in this document and all attachments and that, based on my inquiry of those individuals immediately responsible for obtaining the information, I believe that the information is true, accurate, and complete. I am aware that there are significant penalties for submitting false information, including the possibliity of fine and imprisonment. (Ref. 40 CFR § 144.32)

Name and Official Title *(Please type or print)*	Signature	Date Signed
Dan Johnson, VP - General Manager		10/3/2019

INSTRUCTIONS FOR FORM 7520-19

This form replaces forms 7520-12 and 7520-14. Use this form only when work is planned or has occurred that affects the well's construction or operation as an injection well, including work on the casing, tubing or packer (or for shallow Class V wells, the subsurface fluid emplacement network). Use one form per injection well. While reports or other information developed by contractors or service companies may be attached, this form must be signed by a responsible entity as described at 40 CFR 144.32. Note: operators closing Class V wells should use Form 7520-17.

NAME, ADDRESS, PHONE AND/OR EMAIL OF PERMITTEE: Enter the name and street address, city/town, state, and ZIP code of the permittee. Also provide an email address (if available) and/or a phone number.

PERMIT OR EPA ID NUMBER: Enter the well identification number or permit number assigned to the well by the EPA or the permitting authority.

API NUMBER: Enter the number assigned by the local jurisdiction (usually a State Oil and Gas Agency) using the American Petroleum Institute standard numbering system.

FULL WELL NAME: Enter the full name of the well or project.

Enter the **STATE** and **COUNTY** where the well is located. For States that do not have counties, use the name of that State's equivalent jurisdiction at a more local level.

WELL LOCATION: Fill in the complete township, range, and section to the nearest quarter-quarter section. A township is north or south of the baseline, and a range is east or west of the principal meridian (e.g., T12N, R34W). Also include the distance, in feet, from the nearest north or south line and nearest east or west line of the quarter-section. Also, enter the **latitude** and **longitude** of the well in decimal degrees, to five or six places if possible; be sure to include a negative sign for the longitude of a well in the Western Hemisphere and a negative sign for the latitude of a well in the Southern Hemisphere.

Enter the **WELL CLASS,** i.e., the class of injection well as defined in 40 CFR 144.6.

TIMING OF THE ACTION: Check ***Notice prior to work*** if the activity has not yet occurred (i.e., is planned). Check ***Report after work*** if the activity described has already occurred. As appropriate, include the date the activity is expected to start or the date the activity was completed. (Note this may not be available, e.g., for a plugging plan submitted with a permit application.)

TYPE OF ACTION: Check the appropriate box to describe the kind of activity being reported. Check ***Well Rework*** for work that was/will be performed on the well after it has already been in operation as an injection well. Check ***Plugging and Abandonment*** to report on plans for or descriptions of final closure/plugging after use as an injection well. Check ***Conversion to a Non-Injection Well*** if the well is to be converted to something other than an injection well.

Provide a **NARRATIVE DESCRIPTION** of the work planned to be performed, or that was performed. The narrative should include a description of the main procedures planned or that occurred during the work activity. A service company report, daily report, or similar document may be attached if it includes all the requested information and is clear and legible.

For well reworks, include the following information: The reason for the well rework; depths of activity; type of activity; changes to injection well configuration, well casing, or cement behind casing; any plug added to the well and its depth; any newly drilled interval and its depth; method(s) to demonstrate that the well has mechanical integrity (as applicable); and any deviations from the approved rework plan (as applicable).

For a well plugging plan, include the following information: Reason for the well plugging; number of plugs placed, and their depths; materials used as plugs (e.g., cast iron bridge plug, cement, cement retainer); method to set plugs; and wait-on-cement times, if any. Also provide one or more cost estimates from an independent firm in the business of plugging and abandoning wells to plug the well as described in the plan.

For well plugging affidavit, include the following information: Reason for the well plugging; number of plugs placed, and their depths; materials used as plugs (e.g., cast iron bridge plug, cement, cement retainer); method to set plugs; wait-on-cement times, if any; and any deviations from the approved plugging plan (if applicable).

For conversion to a non-injection well, include the following information: Depths of activity; type of activity; changes to injection well configuration, well casing, or cement behind casing; any plug added to the well and its depth; any newly drilled interval and its depth; depths of new perforations; and method(s) to demonstrate that the well has mechanical integrity (as applicable).

For all of the above activities, include a well sketch depicting the work, results of well tests/logging performed, service company tickets, and any other available information demonstrating how the work was/is to be performed. Also, specify whether depths are below ground surface, relative to Kelly bushing, etc.

CERTIFICATION: This form must be signed and dated by either: a responsible corporate officer for a corporation, by a general partner for a partnership, by the proprietor of a sole proprietorship, or by a principal executive or ranking elected official for a public agency.

PAPERWORK REDUCTION ACT NOTICE: The public reporting and recordkeeping burden for this collection of information is estimated to average between 6.0 and 7.9 hours per response, depending on the injection well class. Burden means the total time, effort, or financial resource expended by persons to generate, maintain, retain, or disclose or provide information to or for a Federal Agency. This includes the time needed to review instructions; develop, acquire, install, and utilize technology and systems for the purposes of collecting, validating, and verifying information, processing and maintaining information, and disclosing and providing information; adjust the existing ways to comply with any previously applicable instructions and requirements; train personnel to be able to respond to the collection of information; search data sources; complete and review the collection of information; and, transmit or otherwise disclose the information. An agency may not conduct or sponsor, and a person is not required to respond to, a collection of information unless it displays a currently valid OMB control number. Send comments on the Agency's need for this information, the accuracy of the provided burden estimates, and any suggested methods for minimizing respondent burden, including the use of automated collection techniques to Director, Collection Strategies Division, U.S. Environmental Protection Agency (2822), 1200 Pennsylvania Ave., NW., Washington, D.C. 20460. Include the OMB control number in any correspondence. Do not send the completed forms to this address.

AS-BUILT COREHOLE 259S

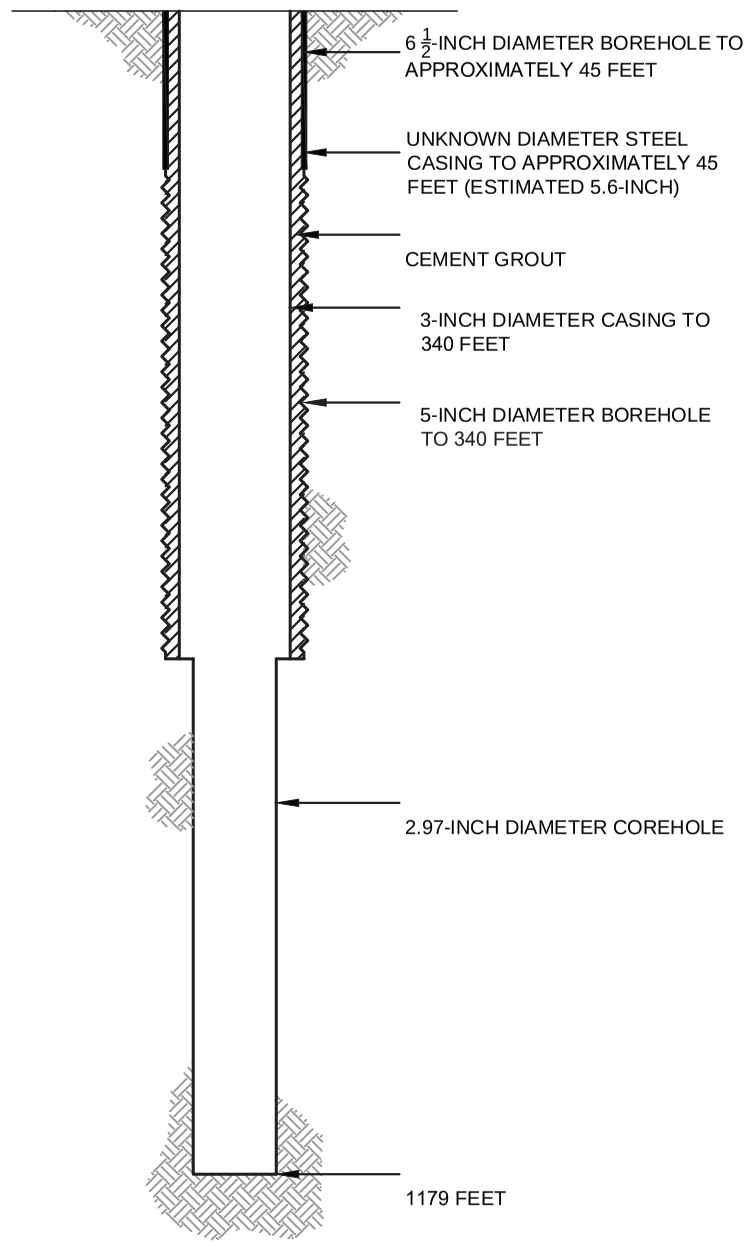

PROPOSED PLUGGING AND ABANDONMENT COREHOLE 259S

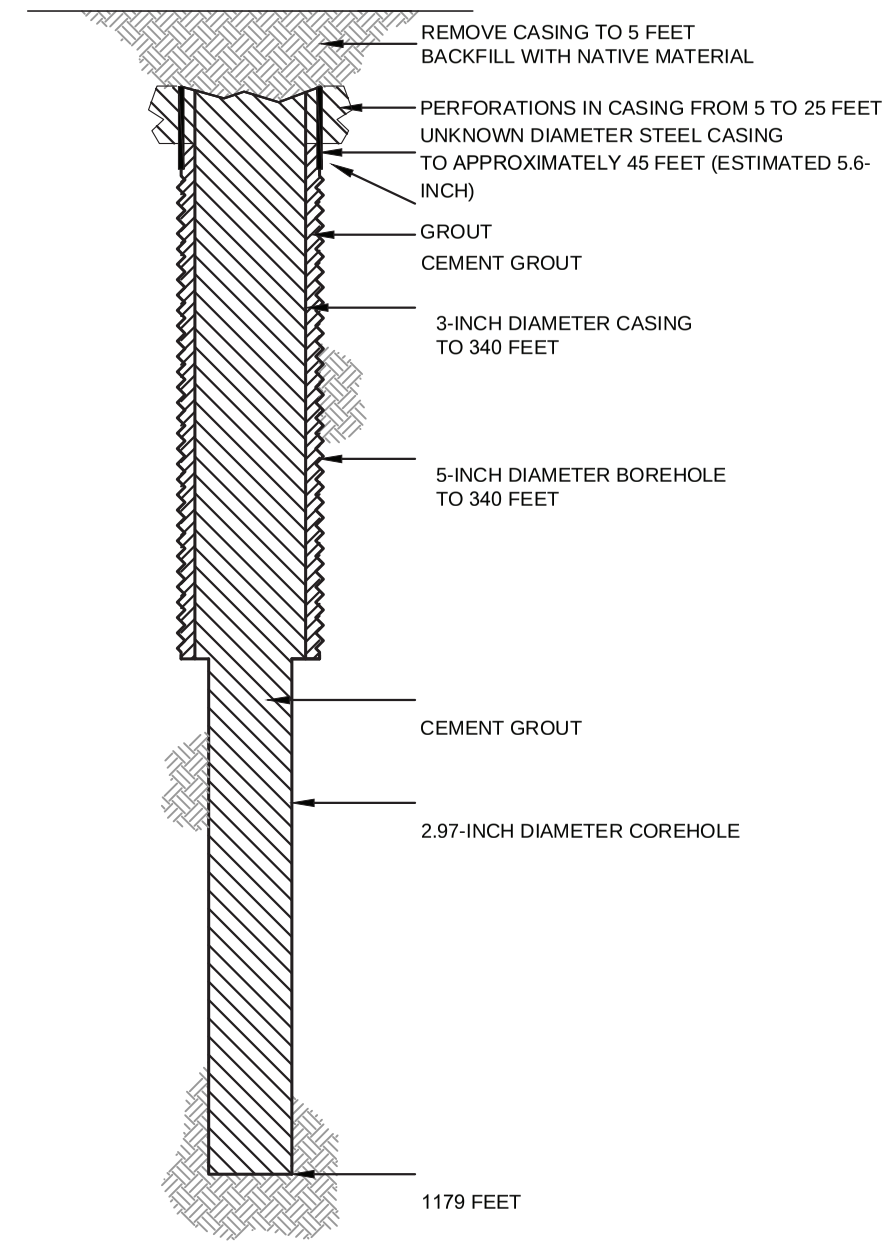

HALEY ALDRICH

FLORENCE COPPER, INC.
FLORENCE, ARIZONA

COREHOLE 259S DIAGRAM

FLORENCE COPPER INC.

NOT TO SCALE
SEPTEMBER 2019

FIGURE 1

MOBINI, GITA Printed: 4/21/2017 12:00 PM Layout: ABANDON (2)
G:\PROJECTS\CURIS RESOURCES\38706-CURIS FEASIBILITY\DRAWINGS\EPA\WELL ABANDON\415S_ABANDON.DWG

OMB No. 2040-0042 Approval Expires 4/30/2022

United States Environmental Protection Agency

WELL REWORK RECORD, PLUGGING AND ABANDONMENT PLAN, OR PLUGGING AND ABANDONMENT AFFIDAVIT

Name and Address, Phone Number and/or Email of Permittee

Florence Copper Project
1575 W Hunt Hwy,
Florence, AZ 85132

Permit or EPA ID Number	API Number	Full Well Name
R9UIC-AZ3-FY11-1		260

State	County
Arizona	Pinal

Locate well in two directions from nearest lines of quarter section and drilling unit

Latitude 33.05032997

Surface Location

NW **1/4 of** SE **1/4 of Section** 28 **Township** 4S **Range** 9E

Longitude -111.4277232

_____ **ft. from (N/S)** _____ **Line of quarter section**

_____ **ft. from (E/W)** _____ **Line of quarter section.**

Well Class	Timing of Action (pick one)	Type of Action (pick one)
☐ Class I ☐ Class II ☑ Class III ☐ Class V	☑ Notice Prior to Work Date Expected to Commence March 2021 ☐ Report After Work Date Work Ended	☐ Well Rework ☑ Plugging and Abandonment ☐ Conversion to a Non-Injection Well

Provide a narrative description of the work planned to be performed, or that was performed. Use additional pages as necessary. See instructions.

A workover rig capable of performing the required abandonment operations at the required depths will be moved in and set up over the core hole. The core hole will be inspected to determine the depth to which the hole remains open and if any obstructions are present in the core hole; the presence and condition of any existing collar will also be documented. If necessary, the core hole will be cleaned out to a depth of at least 100 feet below the bedrock-LBFU contact to enable placement of cement seals.

If collar is present, an attempt will be made to remove it. If removal of the collar is not feasible, it will be left in the hole and perforated as needed to allow an annular seal to be placed to a depth of at least 25 feet bgs. In areas of agricultural use, the surface casing will be cut at least 5 feet bgs and removed.

If the collar cannot be removed, it will be perforated from at least 20 feet below the bedrock-LBFU contact to at least 20 feet above the contact; from at least 20 feet below the base of the MFGU to at least 20 feet above the top of the MFGU; and from at least 25 feet bgs to 5 feet bgs.

A tremie pipe will be used to place Type V cement in the open core hole from the bottom of the core hole to the top of the core hole. Cement retainers, as described above, will be used to force cement grout into the annulus and behind perforated intervals, as necessary.

If the hole has been obstructed, as much cement as possible will be placed from 100 feet below the LBFU-bedrock contact to the top of the core hole.

The volume of Type V cement will be recorded and will not be less than the estimated volume of material required to fill each interval. All cement grout will consist of Type V cement, or equivalent approved in accordance with the UIC Permit.

Certification

I certify under the penalty of law that I have personally examined and am familiar with the information submitted in this document and all attachments and that, based on my inquiry of those individuals immediately responsible for obtaining the information, I believe that the information is true, accurate, and complete. I am aware that there are significant penalties for submitting false information, including the possibliity of fine and imprisonment. (Ref. 40 CFR § 144.32)

Name and Official Title *(Please type or print)*	Signature	Date Signed
Dan Johnson, VP - General Manager		10/3/2019

INSTRUCTIONS FOR FORM 7520-19

This form replaces forms 7520-12 and 7520-14. Use this form only when work is planned or has occurred that affects the well's construction or operation as an injection well, including work on the casing, tubing or packer (or for shallow Class V wells, the subsurface fluid emplacement network). Use one form per injection well. While reports or other information developed by contractors or service companies may be attached, this form must be signed by a responsible entity as described at 40 CFR 144.32. Note: operators closing Class V wells should use Form 7520-17.

NAME, ADDRESS, PHONE AND/OR EMAIL OF PERMITTEE: Enter the name and street address, city/town, state, and ZIP code of the permittee. Also provide an email address (if available) and/or a phone number.

PERMIT OR EPA ID NUMBER: Enter the well identification number or permit number assigned to the well by the EPA or the permitting authority.

API NUMBER: Enter the number assigned by the local jurisdiction (usually a State Oil and Gas Agency) using the American Petroleum Institute standard numbering system.

FULL WELL NAME: Enter the full name of the well or project.

Enter the **STATE** and **COUNTY** where the well is located. For States that do not have counties, use the name of that State's equivalent jurisdiction at a more local level.

WELL LOCATION: Fill in the complete township, range, and section to the nearest quarter-quarter section. A township is north or south of the baseline, and a range is east or west of the principal meridian (e.g., T12N, R34W). Also include the distance, in feet, from the nearest north or south line and nearest east or west line of the quarter-section. Also, enter the **latitude** and **longitude** of the well in decimal degrees, to five or six places if possible; be sure to include a negative sign for the longitude of a well in the Western Hemisphere and a negative sign for the latitude of a well in the Southern Hemisphere.

Enter the **WELL CLASS,** i.e., the class of injection well as defined in 40 CFR 144.6.

TIMING OF THE ACTION: Check ***Notice prior to work*** if the activity has not yet occurred (i.e., is planned). Check ***Report after work*** if the activity described has already occurred. As appropriate, include the date the activity is expected to start or the date the activity was completed. (Note this may not be available, e.g., for a plugging plan submitted with a permit application.)

TYPE OF ACTION: Check the appropriate box to describe the kind of activity being reported. Check ***Well Rework*** for work that was/will be performed on the well after it has already been in operation as an injection well. Check ***Plugging and Abandonment*** to report on plans for or descriptions of final closure/plugging after use as an injection well. Check ***Conversion to a Non-Injection Well*** if the well is to be converted to something other than an injection well.

Provide a **NARRATIVE DESCRIPTION** of the work planned to be performed, or that was performed. The narrative should include a description of the main procedures planned or that occurred during the work activity. A service company report, daily report, or similar document may be attached if it includes all the requested information and is clear and legible.

For well reworks, include the following information: The reason for the well rework; depths of activity; type of activity; changes to injection well configuration, well casing, or cement behind casing; any plug added to the well and its depth; any newly drilled interval and its depth; method(s) to demonstrate that the well has mechanical integrity (as applicable); and any deviations from the approved rework plan (as applicable).

For a well plugging plan, include the following information: Reason for the well plugging; number of plugs placed, and their depths; materials used as plugs (e.g., cast iron bridge plug, cement, cement retainer); method to set plugs; and wait-on-cement times, if any. Also provide one or more cost estimates from an independent firm in the business of plugging and abandoning wells to plug the well as described in the plan.

For well plugging affidavit, include the following information: Reason for the well plugging; number of plugs placed, and their depths; materials used as plugs (e.g., cast iron bridge plug, cement, cement retainer); method to set plugs; wait-on-cement times, if any; and any deviations from the approved plugging plan (if applicable).

For conversion to a non-injection well, include the following information: Depths of activity; type of activity; changes to injection well configuration, well casing, or cement behind casing; any plug added to the well and its depth; any newly drilled interval and its depth; depths of new perforations; and method(s) to demonstrate that the well has mechanical integrity (as applicable).

For all of the above activities, include a well sketch depicting the work, results of well tests/logging performed, service company tickets, and any other available information demonstrating how the work was/is to be performed. Also, specify whether depths are below ground surface, relative to Kelly bushing, etc.

CERTIFICATION: This form must be signed and dated by either: a responsible corporate officer for a corporation, by a general partner for a partnership, by the proprietor of a sole proprietorship, or by a principal executive or ranking elected official for a public agency.

PAPERWORK REDUCTION ACT NOTICE: The public reporting and recordkeeping burden for this collection of information is estimated to average between 6.0 and 7.9 hours per response, depending on the injection well class. Burden means the total time, effort, or financial resource expended by persons to generate, maintain, retain, or disclose or provide information to or for a Federal Agency. This includes the time needed to review instructions; develop, acquire, install, and utilize technology and systems for the purposes of collecting, validating, and verifying information, processing and maintaining information, and disclosing and providing information; adjust the existing ways to comply with any previously applicable instructions and requirements; train personnel to be able to respond to the collection of information; search data sources; complete and review the collection of information; and, transmit or otherwise disclose the information. An agency may not conduct or sponsor, and a person is not required to respond to, a collection of information unless it displays a currently valid OMB control number. Send comments on the Agency's need for this information, the accuracy of the provided burden estimates, and any suggested methods for minimizing respondent burden, including the use of automated collection techniques to Director, Collection Strategies Division, U.S. Environmental Protection Agency (2822), 1200 Pennsylvania Ave., NW., Washington, D.C. 20460. Include the OMB control number in any correspondence. Do not send the completed forms to this address.

AS-BUILT COREHOLE 260

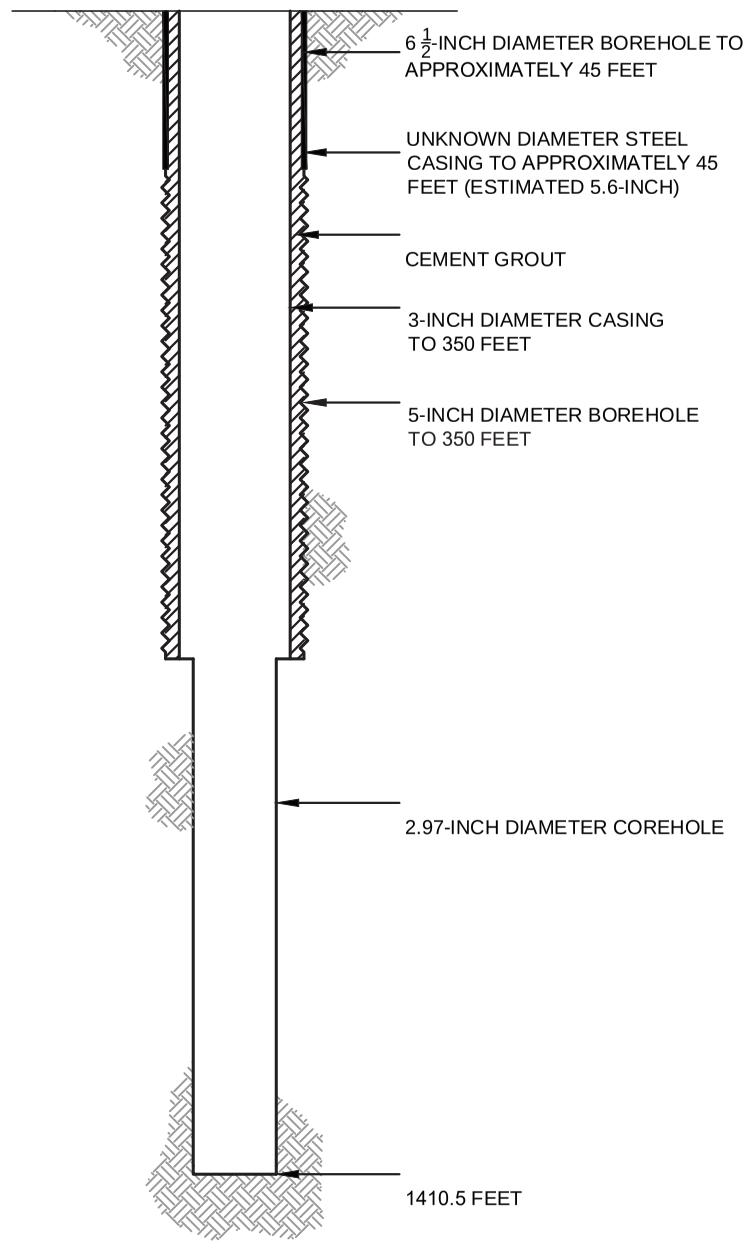

PROPOSED PLUGGING AND ABANDONMENT COREHOLE 260

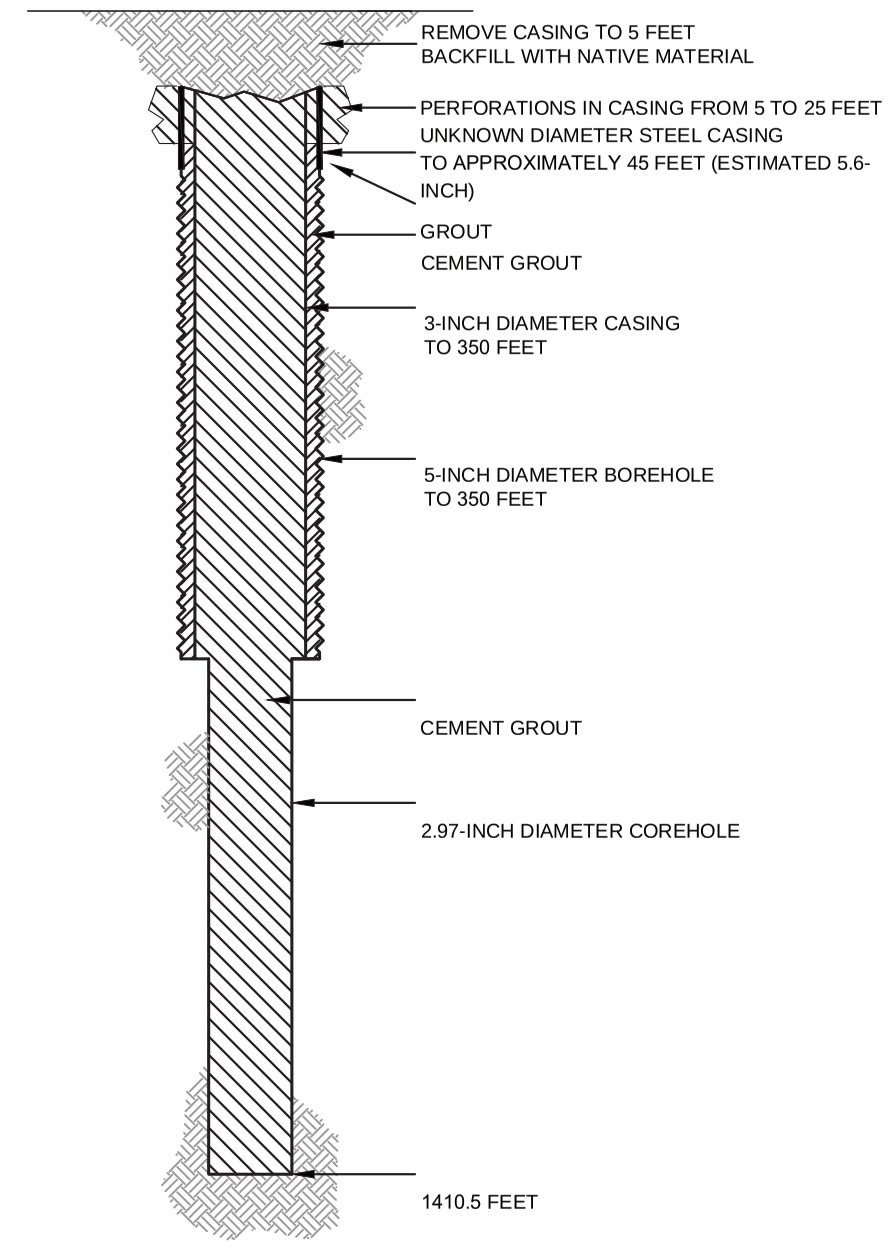

HALEY ALDRICH

FLORENCE COPPER, INC.
FLORENCE, ARIZONA

COREHOLE 260 DIAGRAM

FLORENCE COPPER INC.

NOT TO SCALE
SEPTEMBER 2019

FIGURE 1

MOBINI, GITA Printed: 4/21/2017 12:00 PM Layout: ABANDON (2)
G:\PROJECTS\CURIS RESOURCES\38706-CURIS FEASIBILITY\DRAWINGS\EPA\WELL ABANDON\415S_ABANDON.DWG

OMB No. 2040-0042 Approval Expires 4/30/2022

United States Environmental Protection Agency

WELL REWORK RECORD, PLUGGING AND ABANDONMENT PLAN, OR PLUGGING AND ABANDONMENT AFFIDAVIT

Name and Address, Phone Number and/or Email of Permittee

Florence Copper Project
1575 W Hunt Hwy,
Florence, AZ 85132

Permit or EPA ID Number	API Number	Full Well Name
R9UIC-AZ3-FY11-1		261S

State	County
Arizona	Pinal

Locate well in two directions from nearest lines of quarter section and drilling unit

Latitude 33.05032927

Longitude -111.4285261

Surface Location

NW **1/4 of** SE **1/4 of Section** 28 **Township** 4S **Range** 9E

_____ **ft. from (N/S)** _____ **Line of quarter section**

_____ **ft. from (E/W)** _____ **Line of quarter section.**

Well Class	Timing of Action (pick one)	Type of Action (pick one)
☐ Class I ☐ Class II ☑ Class III ☐ Class V	☑ Notice Prior to Work Date Expected to Commence March 2021 ☐ Report After Work Date Work Ended	☐ Well Rework ☑ Plugging and Abandonment ☐ Conversion to a Non-Injection Well

Provide a narrative description of the work planned to be performed, or that was performed. Use additional pages as necessary. See instructions.

A workover rig capable of performing the required abandonment operations at the required depths will be moved in and set up over the core hole. The core hole will be inspected to determine the depth to which the hole remains open and if any obstructions are present in the core hole; the presence and condition of any existing collar will also be documented. If necessary, the core hole will be cleaned out to a depth of at least 100 feet below the bedrock-LBFU contact to enable placement of cement seals.

If collar is present, an attempt will be made to remove it. If removal of the collar is not feasible, it will be left in the hole and perforated as needed to allow an annular seal to be placed to a depth of at least 25 feet bgs. In areas of agricultural use, the surface casing will be cut at least 5 feet bgs and removed.

If the collar cannot be removed, it will be perforated from at least 20 feet below the bedrock-LBFU contact to at least 20 feet above the contact; from at least 20 feet below the base of the MFGU to at least 20 feet above the top of the MFGU; and from at least 25 feet bgs to 5 feet bgs.

A tremie pipe will be used to place Type V cement in the open core hole from the bottom of the core hole to the top of the core hole. Cement retainers, as described above, will be used to force cement grout into the annulus and behind perforated intervals, as necessary.

If the hole has been obstructed, as much cement as possible will be placed from 100 feet below the LBFU-bedrock contact to the top of the core hole.

The volume of Type V cement will be recorded and will not be less than the estimated volume of material required to fill each interval. All cement grout will consist of Type V cement, or equivalent approved in accordance with the UIC Permit.

Certification

I certify under the penalty of law that I have personally examined and am familiar with the information submitted in this document and all attachments and that, based on my inquiry of those individuals immediately responsible for obtaining the information, I believe that the information is true, accurate, and complete. I am aware that there are significant penalties for submitting false information, including the possibliity of fine and imprisonment. (Ref. 40 CFR § 144.32)

Name and Official Title *(Please type or print)*	Signature	Date Signed
Dan Johnson, VP - General Manager		10/3/2019

INSTRUCTIONS FOR FORM 7520-19

This form replaces forms 7520-12 and 7520-14. Use this form only when work is planned or has occurred that affects the well's construction or operation as an injection well, including work on the casing, tubing or packer (or for shallow Class V wells, the subsurface fluid emplacement network). Use one form per injection well. While reports or other information developed by contractors or service companies may be attached, this form must be signed by a responsible entity as described at 40 CFR 144.32. Note: operators closing Class V wells should use Form 7520-17.

NAME, ADDRESS, PHONE AND/OR EMAIL OF PERMITTEE: Enter the name and street address, city/town, state, and ZIP code of the permittee. Also provide an email address (if available) and/or a phone number.

PERMIT OR EPA ID NUMBER: Enter the well identification number or permit number assigned to the well by the EPA or the permitting authority.

API NUMBER: Enter the number assigned by the local jurisdiction (usually a State Oil and Gas Agency) using the American Petroleum Institute standard numbering system.

FULL WELL NAME: Enter the full name of the well or project.

Enter the **STATE** and **COUNTY** where the well is located. For States that do not have counties, use the name of that State's equivalent jurisdiction at a more local level.

WELL LOCATION: Fill in the complete township, range, and section to the nearest quarter-quarter section. A township is north or south of the baseline, and a range is east or west of the principal meridian (e.g., T12N, R34W). Also include the distance, in feet, from the nearest north or south line and nearest east or west line of the quarter-section. Also, enter the **latitude** and **longitude** of the well in decimal degrees, to five or six places if possible; be sure to include a negative sign for the longitude of a well in the Western Hemisphere and a negative sign for the latitude of a well in the Southern Hemisphere.

Enter the **WELL CLASS,** i.e., the class of injection well as defined in 40 CFR 144.6.

TIMING OF THE ACTION: Check ***Notice prior to work*** if the activity has not yet occurred (i.e., is planned). Check ***Report after work*** if the activity described has already occurred. As appropriate, include the date the activity is expected to start or the date the activity was completed. (Note this may not be available, e.g., for a plugging plan submitted with a permit application.)

TYPE OF ACTION: Check the appropriate box to describe the kind of activity being reported. Check ***Well Rework*** for work that was/will be performed on the well after it has already been in operation as an injection well. Check ***Plugging and Abandonment*** to report on plans for or descriptions of final closure/plugging after use as an injection well. Check ***Conversion to a Non-Injection Well*** if the well is to be converted to something other than an injection well.

Provide a **NARRATIVE DESCRIPTION** of the work planned to be performed, or that was performed. The narrative should include a description of the main procedures planned or that occurred during the work activity. A service company report, daily report, or similar document may be attached if it includes all the requested information and is clear and legible.

For well reworks, include the following information: The reason for the well rework; depths of activity; type of activity; changes to injection well configuration, well casing, or cement behind casing; any plug added to the well and its depth; any newly drilled interval and its depth; method(s) to demonstrate that the well has mechanical integrity (as applicable); and any deviations from the approved rework plan (as applicable).

For a well plugging plan, include the following information: Reason for the well plugging; number of plugs placed, and their depths; materials used as plugs (e.g., cast iron bridge plug, cement, cement retainer); method to set plugs; and wait-on-cement times, if any. Also provide one or more cost estimates from an independent firm in the business of plugging and abandoning wells to plug the well as described in the plan.

For well plugging affidavit, include the following information: Reason for the well plugging; number of plugs placed, and their depths; materials used as plugs (e.g., cast iron bridge plug, cement, cement retainer); method to set plugs; wait-on-cement times, if any; and any deviations from the approved plugging plan (if applicable).

For conversion to a non-injection well, include the following information: Depths of activity; type of activity; changes to injection well configuration, well casing, or cement behind casing; any plug added to the well and its depth; any newly drilled interval and its depth; depths of new perforations; and method(s) to demonstrate that the well has mechanical integrity (as applicable).

For all of the above activities, include a well sketch depicting the work, results of well tests/logging performed, service company tickets, and any other available information demonstrating how the work was/is to be performed. Also, specify whether depths are below ground surface, relative to Kelly bushing, etc.

CERTIFICATION: This form must be signed and dated by either: a responsible corporate officer for a corporation, by a general partner for a partnership, by the proprietor of a sole proprietorship, or by a principal executive or ranking elected official for a public agency.

PAPERWORK REDUCTION ACT NOTICE: The public reporting and recordkeeping burden for this collection of information is estimated to average between 6.0 and 7.9 hours per response, depending on the injection well class. Burden means the total time, effort, or financial resource expended by persons to generate, maintain, retain, or disclose or provide information to or for a Federal Agency. This includes the time needed to review instructions; develop, acquire, install, and utilize technology and systems for the purposes of collecting, validating, and verifying information, processing and maintaining information, and disclosing and providing information; adjust the existing ways to comply with any previously applicable instructions and requirements; train personnel to be able to respond to the collection of information; search data sources; complete and review the collection of information; and, transmit or otherwise disclose the information. An agency may not conduct or sponsor, and a person is not required to respond to, a collection of information unless it displays a currently valid OMB control number. Send comments on the Agency's need for this information, the accuracy of the provided burden estimates, and any suggested methods for minimizing respondent burden, including the use of automated collection techniques to Director, Collection Strategies Division, U.S. Environmental Protection Agency (2822), 1200 Pennsylvania Ave., NW., Washington, D.C. 20460. Include the OMB control number in any correspondence. Do not send the completed forms to this address.

AS-BUILT COREHOLE 261S

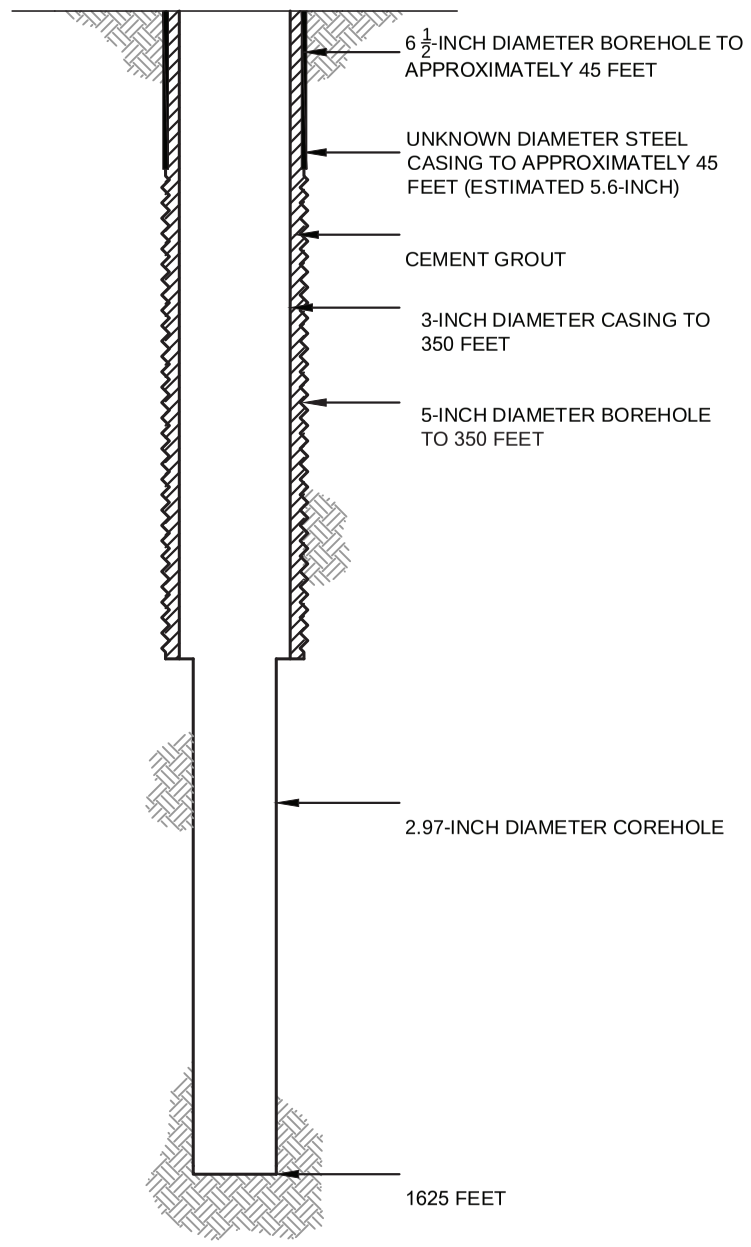

PROPOSED PLUGGING AND ABANDONMENT COREHOLE 261S

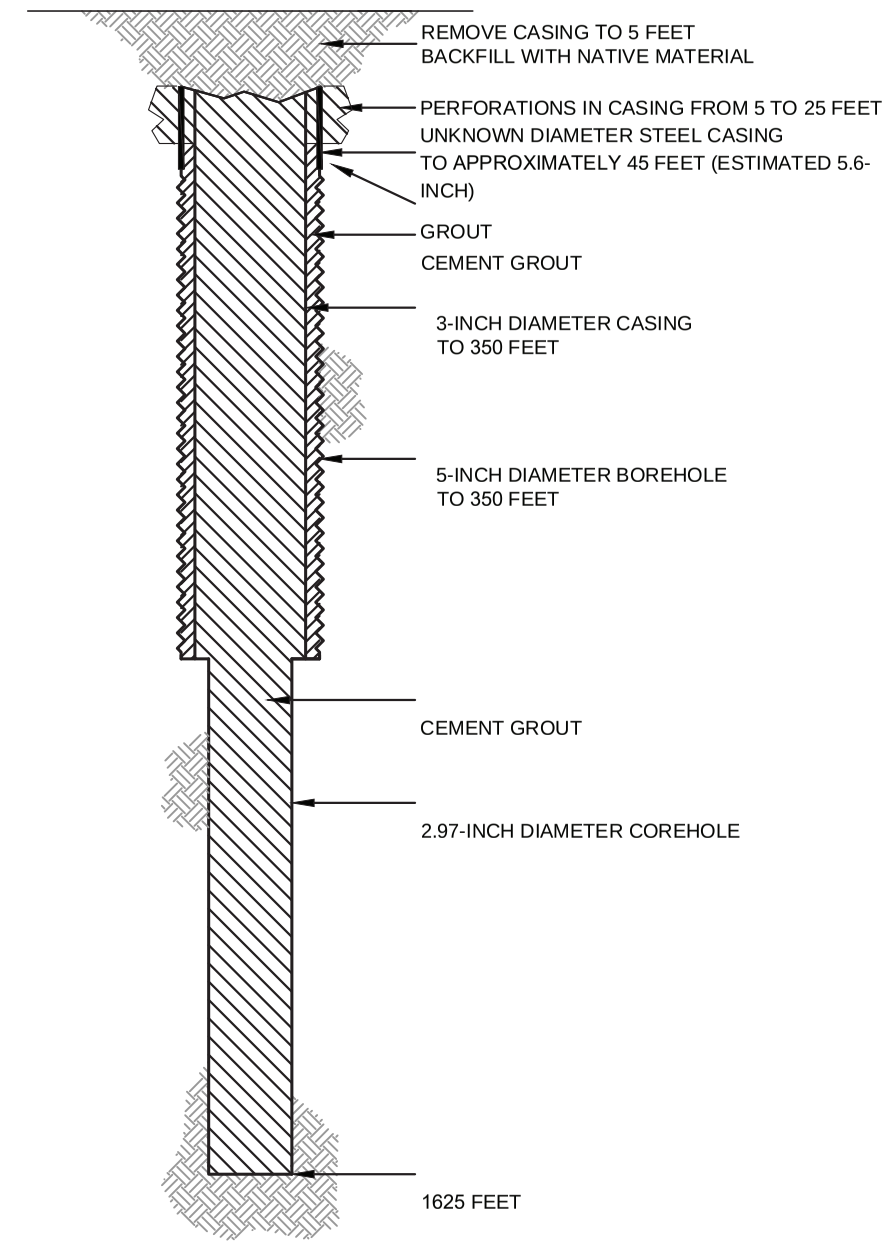

HALEY ALDRICH

FLORENCE COPPER, INC.
FLORENCE, ARIZONA

COREHOLE 261S DIAGRAM

FLORENCE COPPER INC.

NOT TO SCALE
SEPTEMBER 2019

FIGURE 1

MOBINI, GITA Printed: 4/21/2017 12:00 PM Layout: ABANDON (2)
G:\PROJECTS\CURIS RESOURCES\38706-CURIS FEASIBILITY\DRAWINGS\EPA\WELL ABANDON\415S_ABANDON.DWG

OMB No. 2040-0042 Approval Expires 4/30/2022

United States Environmental Protection Agency

WELL REWORK RECORD, PLUGGING AND ABANDONMENT PLAN, OR PLUGGING AND ABANDONMENT AFFIDAVIT

Name and Address, Phone Number and/or Email of Permittee

Florence Copper Project
1575 W Hunt Hwy,
Florence, AZ 85132

Permit or EPA ID Number	API Number	Full Well Name
R9UIC-AZ3-FY11-1		262S

State	County
Arizona	Pinal

Locate well in two directions from nearest lines of quarter section and drilling unit

Latitude 33.04974489

Longitude -111.4264889

Surface Location

NW **1/4 of** SE **1/4 of Section** 28 **Township** 4S **Range** 9E

_____ **ft. from (N/S)** _____ **Line of quarter section**

_____ **ft. from (E/W)** _____ **Line of quarter section.**

Well Class	Timing of Action (pick one)	Type of Action (pick one)
☐ Class I ☐ Class II ☑ Class III ☐ Class V	☑ Notice Prior to Work Date Expected to Commence March 2021 ☐ Report After Work Date Work Ended	☐ Well Rework ☑ Plugging and Abandonment ☐ Conversion to a Non-Injection Well

Provide a narrative description of the work planned to be performed, or that was performed. Use additional pages as necessary. See instructions.

A workover rig capable of performing the required abandonment operations at the required depths will be moved in and set up over the core hole. The core hole will be inspected to determine the depth to which the hole remains open and if any obstructions are present in the core hole; the presence and condition of any existing collar will also be documented. If necessary, the core hole will be cleaned out to a depth of at least 100 feet below the bedrock-LBFU contact to enable placement of cement seals.

If collar is present, an attempt will be made to remove it. If removal of the collar is not feasible, it will be left in the hole and perforated as needed to allow an annular seal to be placed to a depth of at least 25 feet bgs. In areas of agricultural use, the surface casing will be cut at least 5 feet bgs and removed.

If the collar cannot be removed, it will be perforated from at least 20 feet below the bedrock-LBFU contact to at least 20 feet above the contact; from at least 20 feet below the base of the MFGU to at least 20 feet above the top of the MFGU; and from at least 25 feet bgs to 5 feet bgs.

A tremie pipe will be used to place Type V cement in the open core hole from the bottom of the core hole to the top of the core hole. Cement retainers, as described above, will be used to force cement grout into the annulus and behind perforated intervals, as necessary.

If the hole has been obstructed, as much cement as possible will be placed from 100 feet below the LBFU-bedrock contact to the top of the core hole.

The volume of Type V cement will be recorded and will not be less than the estimated volume of material required to fill each interval. All cement grout will consist of Type V cement, or equivalent approved in accordance with the UIC Permit.

Certification

I certify under the penalty of law that I have personally examined and am familiar with the information submitted in this document and all attachments and that, based on my inquiry of those individuals immediately responsible for obtaining the information, I believe that the information is true, accurate, and complete. I am aware that there are significant penalties for submitting false information, including the possibliity of fine and imprisonment. (Ref. 40 CFR § 144.32)

Name and Official Title *(Please type or print)*	Signature	Date Signed
Dan Johnson, VP - General Manager		10/3/2019

INSTRUCTIONS FOR FORM 7520-19

This form replaces forms 7520-12 and 7520-14. Use this form only when work is planned or has occurred that affects the well's construction or operation as an injection well, including work on the casing, tubing or packer (or for shallow Class V wells, the subsurface fluid emplacement network). Use one form per injection well. While reports or other information developed by contractors or service companies may be attached, this form must be signed by a responsible entity as described at 40 CFR 144.32. Note: operators closing Class V wells should use Form 7520-17.

NAME, ADDRESS, PHONE AND/OR EMAIL OF PERMITTEE: Enter the name and street address, city/town, state, and ZIP code of the permittee. Also provide an email address (if available) and/or a phone number.

PERMIT OR EPA ID NUMBER: Enter the well identification number or permit number assigned to the well by the EPA or the permitting authority.

API NUMBER: Enter the number assigned by the local jurisdiction (usually a State Oil and Gas Agency) using the American Petroleum Institute standard numbering system.

FULL WELL NAME: Enter the full name of the well or project.

Enter the **STATE** and **COUNTY** where the well is located. For States that do not have counties, use the name of that State's equivalent jurisdiction at a more local level.

WELL LOCATION: Fill in the complete township, range, and section to the nearest quarter-quarter section. A township is north or south of the baseline, and a range is east or west of the principal meridian (e.g., T12N, R34W). Also include the distance, in feet, from the nearest north or south line and nearest east or west line of the quarter-section. Also, enter the **latitude** and **longitude** of the well in decimal degrees, to five or six places if possible; be sure to include a negative sign for the longitude of a well in the Western Hemisphere and a negative sign for the latitude of a well in the Southern Hemisphere.

Enter the **WELL CLASS,** i.e., the class of injection well as defined in 40 CFR 144.6.

TIMING OF THE ACTION: Check ***Notice prior to work*** if the activity has not yet occurred (i.e., is planned). Check ***Report after work*** if the activity described has already occurred. As appropriate, include the date the activity is expected to start or the date the activity was completed. (Note this may not be available, e.g., for a plugging plan submitted with a permit application.)

TYPE OF ACTION: Check the appropriate box to describe the kind of activity being reported. Check ***Well Rework*** for work that was/will be performed on the well after it has already been in operation as an injection well. Check ***Plugging and Abandonment*** to report on plans for or descriptions of final closure/plugging after use as an injection well. Check ***Conversion to a Non-Injection Well*** if the well is to be converted to something other than an injection well.

Provide a **NARRATIVE DESCRIPTION** of the work planned to be performed, or that was performed. The narrative should include a description of the main procedures planned or that occurred during the work activity. A service company report, daily report, or similar document may be attached if it includes all the requested information and is clear and legible.

For well reworks, include the following information: The reason for the well rework; depths of activity; type of activity; changes to injection well configuration, well casing, or cement behind casing; any plug added to the well and its depth; any newly drilled interval and its depth; method(s) to demonstrate that the well has mechanical integrity (as applicable); and any deviations from the approved rework plan (as applicable).

For a well plugging plan, include the following information: Reason for the well plugging; number of plugs placed, and their depths; materials used as plugs (e.g., cast iron bridge plug, cement, cement retainer); method to set plugs; and wait-on-cement times, if any. Also provide one or more cost estimates from an independent firm in the business of plugging and abandoning wells to plug the well as described in the plan.

For well plugging affidavit, include the following information: Reason for the well plugging; number of plugs placed, and their depths; materials used as plugs (e.g., cast iron bridge plug, cement, cement retainer); method to set plugs; wait-on-cement times, if any; and any deviations from the approved plugging plan (if applicable).

For conversion to a non-injection well, include the following information: Depths of activity; type of activity; changes to injection well configuration, well casing, or cement behind casing; any plug added to the well and its depth; any newly drilled interval and its depth; depths of new perforations; and method(s) to demonstrate that the well has mechanical integrity (as applicable).

For all of the above activities, include a well sketch depicting the work, results of well tests/logging performed, service company tickets, and any other available information demonstrating how the work was/is to be performed. Also, specify whether depths are below ground surface, relative to Kelly bushing, etc.

CERTIFICATION: This form must be signed and dated by either: a responsible corporate officer for a corporation, by a general partner for a partnership, by the proprietor of a sole proprietorship, or by a principal executive or ranking elected official for a public agency.

PAPERWORK REDUCTION ACT NOTICE: The public reporting and recordkeeping burden for this collection of information is estimated to average between 6.0 and 7.9 hours per response, depending on the injection well class. Burden means the total time, effort, or financial resource expended by persons to generate, maintain, retain, or disclose or provide information to or for a Federal Agency. This includes the time needed to review instructions; develop, acquire, install, and utilize technology and systems for the purposes of collecting, validating, and verifying information, processing and maintaining information, and disclosing and providing information; adjust the existing ways to comply with any previously applicable instructions and requirements; train personnel to be able to respond to the collection of information; search data sources; complete and review the collection of information; and, transmit or otherwise disclose the information. An agency may not conduct or sponsor, and a person is not required to respond to, a collection of information unless it displays a currently valid OMB control number. Send comments on the Agency's need for this information, the accuracy of the provided burden estimates, and any suggested methods for minimizing respondent burden, including the use of automated collection techniques to Director, Collection Strategies Division, U.S. Environmental Protection Agency (2822), 1200 Pennsylvania Ave., NW., Washington, D.C. 20460. Include the OMB control number in any correspondence. Do not send the completed forms to this address.

AS-BUILT COREHOLE 262S

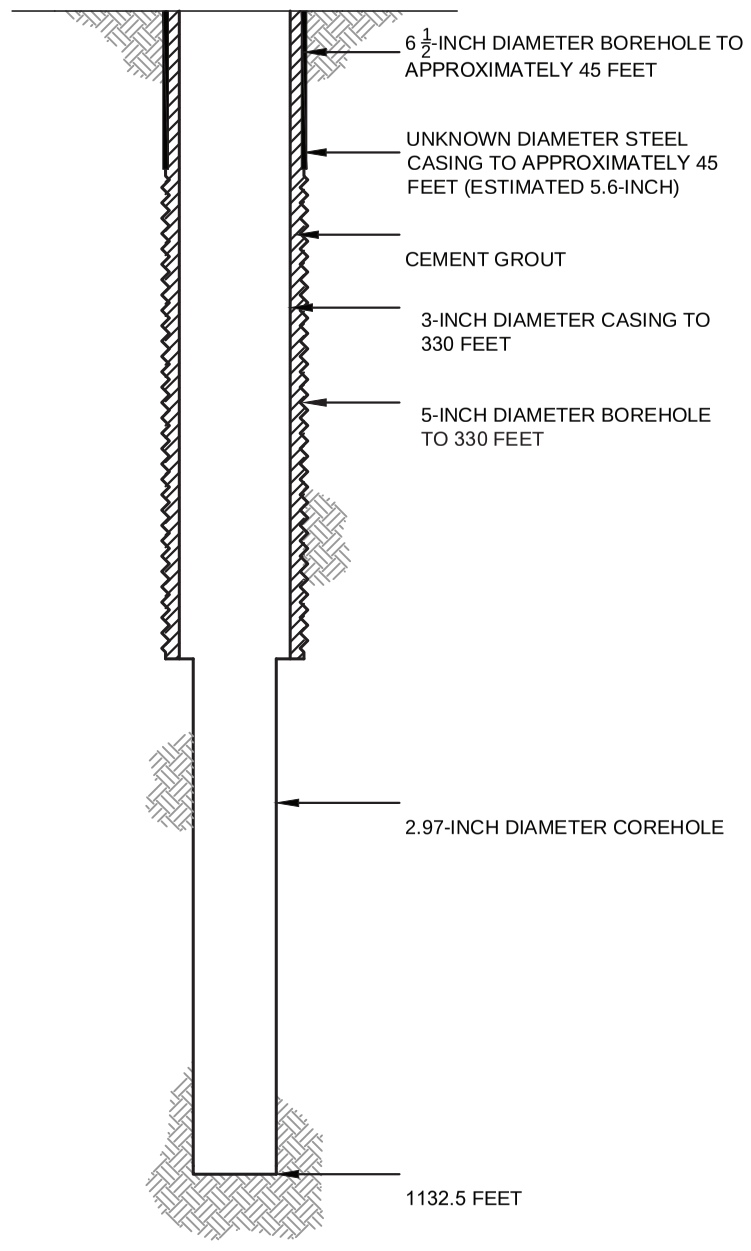

PROPOSED PLUGGING AND ABANDONMENT COREHOLE 262S

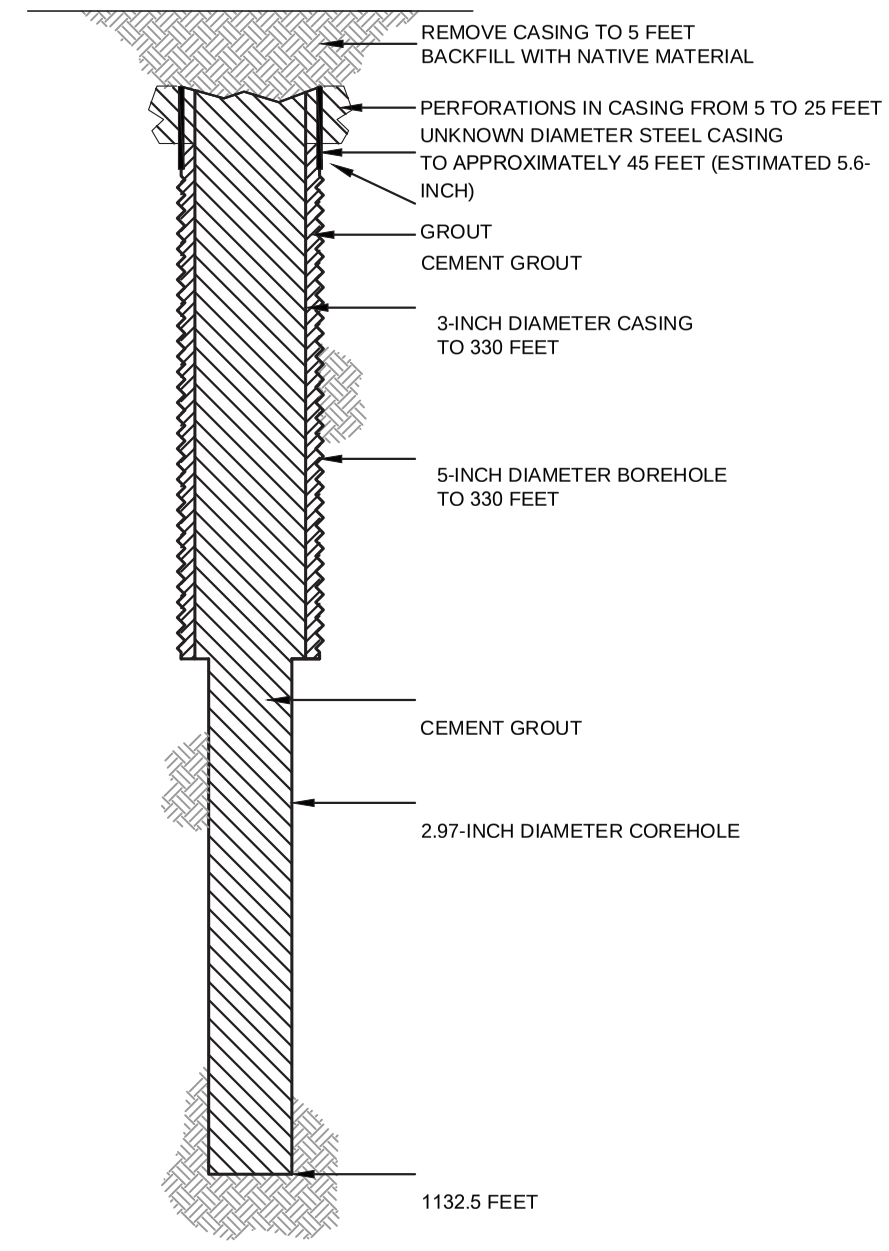

HALEY ALDRICH

FLORENCE COPPER, INC.
FLORENCE, ARIZONA

COREHOLE 262S DIAGRAM

FLORENCE COPPER INC.

NOT TO SCALE
SEPTEMBER 2019

FIGURE 1

MOBINI, GITA Printed: 4/21/2017 12:00 PM Layout: ABANDON (2)
G:\PROJECTS\CURIS RESOURCES\38706-CURIS FEASIBILITY\DRAWINGS\EPA\WELL ABANDON\415S_ABANDON.DWG

OMB No. 2040-0042 Approval Expires 4/30/2022

United States Environmental Protection Agency

WELL REWORK RECORD, PLUGGING AND ABANDONMENT PLAN, OR PLUGGING AND ABANDONMENT AFFIDAVIT

Name and Address, Phone Number and/or Email of Permittee

Florence Copper Project
1575 W Hunt Hwy,
Florence, AZ 85132

Permit or EPA ID Number	API Number	Full Well Name
R9UIC-AZ3-FY11-1		263MF

State	County
Arizona	Pinal

Locate well in two directions from nearest lines of quarter section and drilling unit

Latitude 33.04914555

Longitude -111.4277118

Surface Location

SW **1/4 of** SE **1/4 of Section** 28 **Township** 4S **Range** 9E

_____ **ft. from (N/S)** _____ **Line of quarter section**

_____ **ft. from (E/W)** _____ **Line of quarter section.**

Well Class	Timing of Action (pick one)	Type of Action (pick one)
☐ Class I ☐ Class II ☑ Class III ☐ Class V	☑ Notice Prior to Work Date Expected to Commence March 2021 ☐ Report After Work Date Work Ended	☐ Well Rework ☑ Plugging and Abandonment ☐ Conversion to a Non-Injection Well

Provide a narrative description of the work planned to be performed, or that was performed. Use additional pages as necessary. See instructions.

A workover rig capable of performing the required abandonment operations at the required depths will be moved in and set up over the core hole. The core hole will be inspected to determine the depth to which the hole remains open and if any obstructions are present in the core hole; the presence and condition of any existing collar will also be documented. If necessary, the core hole will be cleaned out to a depth of at least 100 feet below the bedrock-LBFU contact to enable placement of cement seals.

If collar is present, an attempt will be made to remove it. If removal of the collar is not feasible, it will be left in the hole and perforated as needed to allow an annular seal to be placed to a depth of at least 25 feet bgs. In areas of agricultural use, the surface casing will be cut at least 5 feet bgs and removed.

If the collar cannot be removed, it will be perforated from at least 20 feet below the bedrock-LBFU contact to at least 20 feet above the contact; from at least 20 feet below the base of the MFGU to at least 20 feet above the top of the MFGU; and from at least 25 feet bgs to 5 feet bgs.

A tremie pipe will be used to place Type V cement in the open core hole from the bottom of the core hole to the top of the core hole. Cement retainers, as described above, will be used to force cement grout into the annulus and behind perforated intervals, as necessary.

If the hole has been obstructed, as much cement as possible will be placed from 100 feet below the LBFU-bedrock contact to the top of the core hole.

The volume of Type V cement will be recorded and will not be less than the estimated volume of material required to fill each interval. All cement grout will consist of Type V cement, or equivalent approved in accordance with the UIC Permit.

Certification

I certify under the penalty of law that I have personally examined and am familiar with the information submitted in this document and all attachments and that, based on my inquiry of those individuals immediately responsible for obtaining the information, I believe that the information is true, accurate, and complete. I am aware that there are significant penalties for submitting false information, including the possibliity of fine and imprisonment. (Ref. 40 CFR § 144.32)

Name and Official Title *(Please type or print)*	Signature	Date Signed
Dan Johnson, VP - General Manager		10/3/2019

INSTRUCTIONS FOR FORM 7520-19

This form replaces forms 7520-12 and 7520-14. Use this form only when work is planned or has occurred that affects the well's construction or operation as an injection well, including work on the casing, tubing or packer (or for shallow Class V wells, the subsurface fluid emplacement network). Use one form per injection well. While reports or other information developed by contractors or service companies may be attached, this form must be signed by a responsible entity as described at 40 CFR 144.32. Note: operators closing Class V wells should use Form 7520-17.

NAME, ADDRESS, PHONE AND/OR EMAIL OF PERMITTEE: Enter the name and street address, city/town, state, and ZIP code of the permittee. Also provide an email address (if available) and/or a phone number.

PERMIT OR EPA ID NUMBER: Enter the well identification number or permit number assigned to the well by the EPA or the permitting authority.

API NUMBER: Enter the number assigned by the local jurisdiction (usually a State Oil and Gas Agency) using the American Petroleum Institute standard numbering system.

FULL WELL NAME: Enter the full name of the well or project.

Enter the **STATE** and **COUNTY** where the well is located. For States that do not have counties, use the name of that State's equivalent jurisdiction at a more local level.

WELL LOCATION: Fill in the complete township, range, and section to the nearest quarter-quarter section. A township is north or south of the baseline, and a range is east or west of the principal meridian (e.g., T12N, R34W). Also include the distance, in feet, from the nearest north or south line and nearest east or west line of the quarter-section. Also, enter the **latitude** and **longitude** of the well in decimal degrees, to five or six places if possible; be sure to include a negative sign for the longitude of a well in the Western Hemisphere and a negative sign for the latitude of a well in the Southern Hemisphere.

Enter the **WELL CLASS,** i.e., the class of injection well as defined in 40 CFR 144.6.

TIMING OF THE ACTION: Check ***Notice prior to work*** if the activity has not yet occurred (i.e., is planned). Check ***Report after work*** if the activity described has already occurred. As appropriate, include the date the activity is expected to start or the date the activity was completed. (Note this may not be available, e.g., for a plugging plan submitted with a permit application.)

TYPE OF ACTION: Check the appropriate box to describe the kind of activity being reported. Check ***Well Rework*** for work that was/will be performed on the well after it has already been in operation as an injection well. Check ***Plugging and Abandonment*** to report on plans for or descriptions of final closure/plugging after use as an injection well. Check ***Conversion to a Non-Injection Well*** if the well is to be converted to something other than an injection well.

Provide a **NARRATIVE DESCRIPTION** of the work planned to be performed, or that was performed. The narrative should include a description of the main procedures planned or that occurred during the work activity. A service company report, daily report, or similar document may be attached if it includes all the requested information and is clear and legible.

For well reworks, include the following information: The reason for the well rework; depths of activity; type of activity; changes to injection well configuration, well casing, or cement behind casing; any plug added to the well and its depth; any newly drilled interval and its depth; method(s) to demonstrate that the well has mechanical integrity (as applicable); and any deviations from the approved rework plan (as applicable).

For a well plugging plan, include the following information: Reason for the well plugging; number of plugs placed, and their depths; materials used as plugs (e.g., cast iron bridge plug, cement, cement retainer); method to set plugs; and wait-on-cement times, if any. Also provide one or more cost estimates from an independent firm in the business of plugging and abandoning wells to plug the well as described in the plan.

For well plugging affidavit, include the following information: Reason for the well plugging; number of plugs placed, and their depths; materials used as plugs (e.g., cast iron bridge plug, cement, cement retainer); method to set plugs; wait-on-cement times, if any; and any deviations from the approved plugging plan (if applicable).

For conversion to a non-injection well, include the following information: Depths of activity; type of activity; changes to injection well configuration, well casing, or cement behind casing; any plug added to the well and its depth; any newly drilled interval and its depth; depths of new perforations; and method(s) to demonstrate that the well has mechanical integrity (as applicable).

For all of the above activities, include a well sketch depicting the work, results of well tests/logging performed, service company tickets, and any other available information demonstrating how the work was/is to be performed. Also, specify whether depths are below ground surface, relative to Kelly bushing, etc.

CERTIFICATION: This form must be signed and dated by either: a responsible corporate officer for a corporation, by a general partner for a partnership, by the proprietor of a sole proprietorship, or by a principal executive or ranking elected official for a public agency.

PAPERWORK REDUCTION ACT NOTICE: The public reporting and recordkeeping burden for this collection of information is estimated to average between 6.0 and 7.9 hours per response, depending on the injection well class. Burden means the total time, effort, or financial resource expended by persons to generate, maintain, retain, or disclose or provide information to or for a Federal Agency. This includes the time needed to review instructions; develop, acquire, install, and utilize technology and systems for the purposes of collecting, validating, and verifying information, processing and maintaining information, and disclosing and providing information; adjust the existing ways to comply with any previously applicable instructions and requirements; train personnel to be able to respond to the collection of information; search data sources; complete and review the collection of information; and, transmit or otherwise disclose the information. An agency may not conduct or sponsor, and a person is not required to respond to, a collection of information unless it displays a currently valid OMB control number. Send comments on the Agency's need for this information, the accuracy of the provided burden estimates, and any suggested methods for minimizing respondent burden, including the use of automated collection techniques to Director, Collection Strategies Division, U.S. Environmental Protection Agency (2822), 1200 Pennsylvania Ave., NW., Washington, D.C. 20460. Include the OMB control number in any correspondence. Do not send the completed forms to this address.

AS-BUILT COREHOLE 263MF

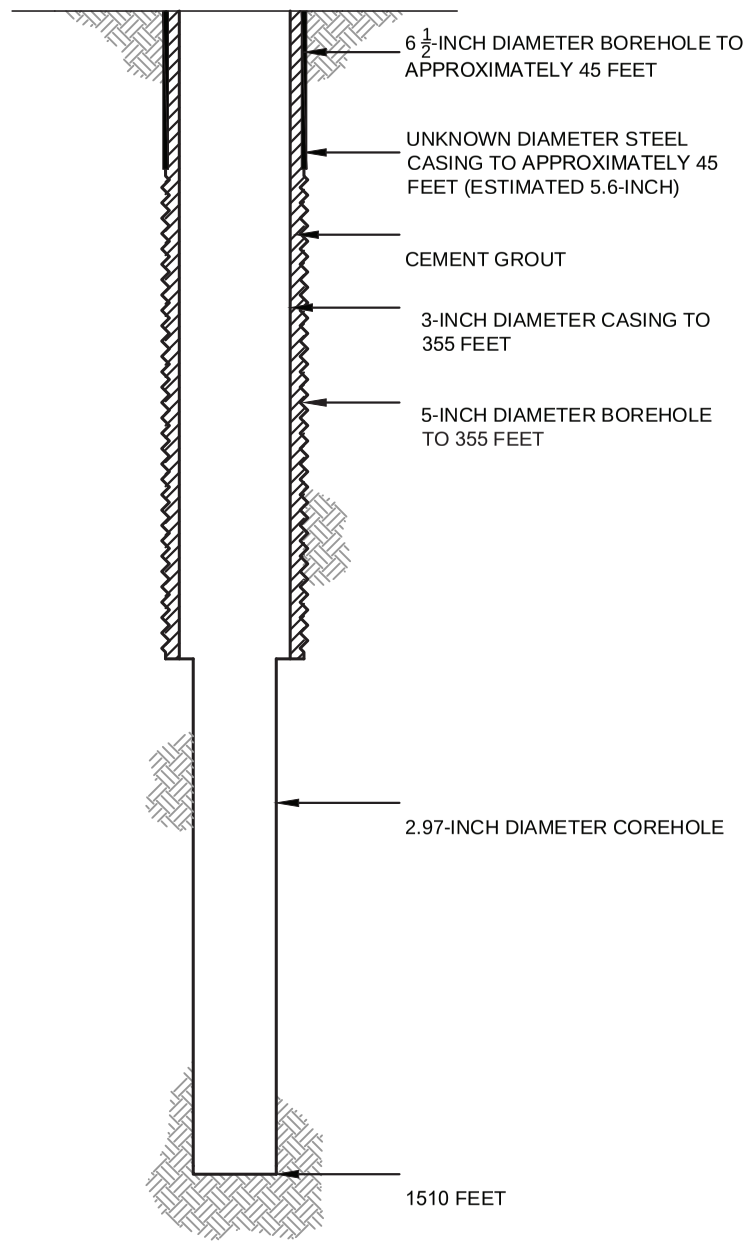

PROPOSED PLUGGING AND ABANDONMENT COREHOLE 263MF

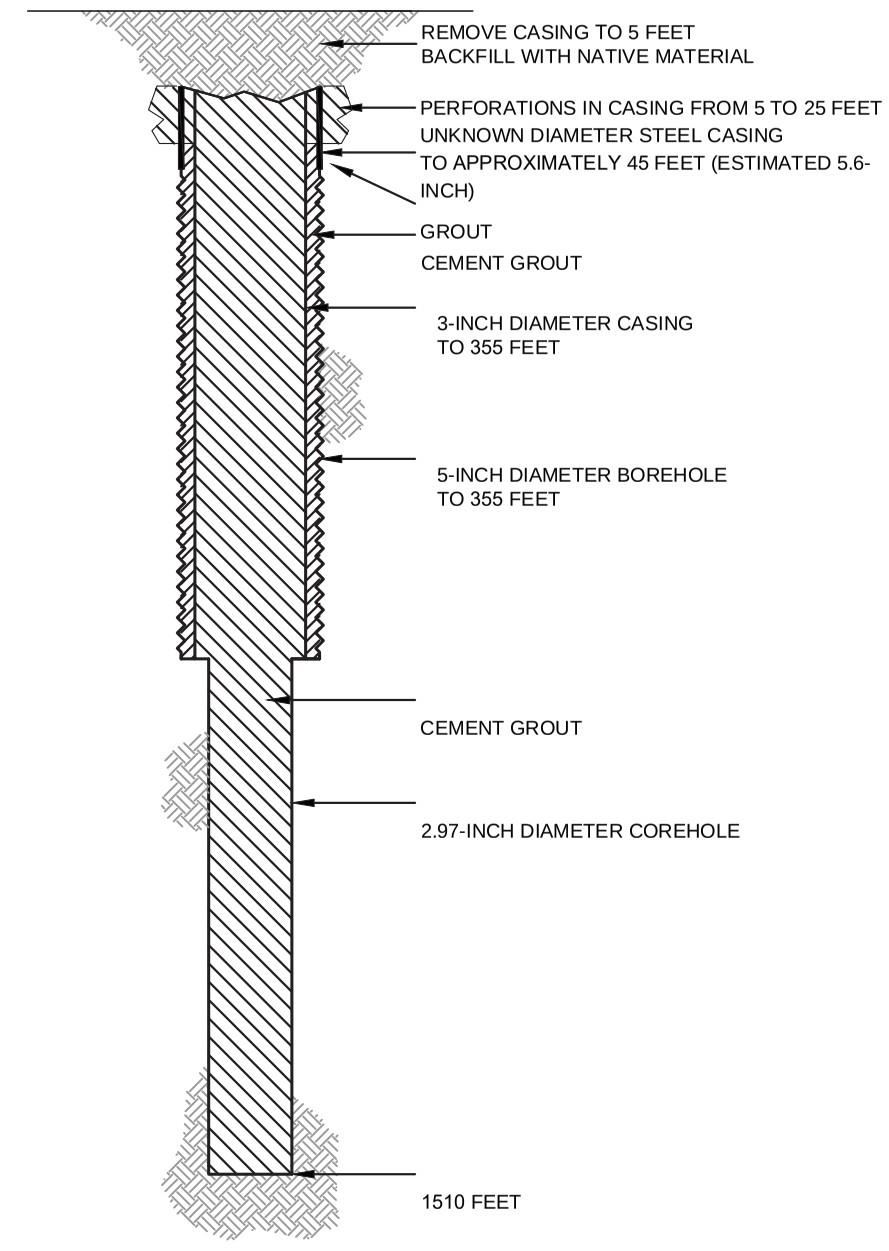

HALEY ALDRICH

FLORENCE COPPER, INC.
FLORENCE, ARIZONA

COREHOLE 263MF DIAGRAM

FLORENCE COPPER INC.

NOT TO SCALE
SEPTEMBER 2019

FIGURE 1

MOBINI, GITA Printed: 4/21/2017 12:00 PM Layout: ABANDON (2)
G:\PROJECTS\CURIS RESOURCES\38706-CURIS FEASIBILITY\DRAWINGS\EPA\WELL ABANDON\415S_ABANDON.DWG

OMB No. 2040-0042 Approval Expires 4/30/2022

United States Environmental Protection Agency

WELL REWORK RECORD, PLUGGING AND ABANDONMENT PLAN, OR PLUGGING AND ABANDONMENT AFFIDAVIT

Name and Address, Phone Number and/or Email of Permittee

Florence Copper Project
1575 W Hunt Hwy,
Florence, AZ 85132

Permit or EPA ID Number	API Number	Full Well Name
R9UIC-AZ3-FY11-1		264MF

State	County
Arizona	Pinal

Locate well in two directions from nearest lines of quarter section and drilling unit

Latitude 33.04855332

Longitude -111.4273156

Surface Location

SW **1/4 of** SE **1/4 of Section** 28 **Township** 4S **Range** 9E

_____ **ft. from (N/S)** _____ **Line of quarter section**

_____ **ft. from (E/W)** _____ **Line of quarter section.**

Well Class	Timing of Action (pick one)	Type of Action (pick one)
☐ Class I ☐ Class II ☑ Class III ☐ Class V	☑ Notice Prior to Work Date Expected to Commence March 2021 ☐ Report After Work Date Work Ended	☐ Well Rework ☑ Plugging and Abandonment ☐ Conversion to a Non-Injection Well

Provide a narrative description of the work planned to be performed, or that was performed. Use additional pages as necessary. See instructions.

A workover rig capable of performing the required abandonment operations at the required depths will be moved in and set up over the core hole. The core hole will be inspected to determine the depth to which the hole remains open and if any obstructions are present in the core hole; the presence and condition of any existing collar will also be documented. If necessary, the core hole will be cleaned out to a depth of at least 100 feet below the bedrock-LBFU contact to enable placement of cement seals.

If collar is present, an attempt will be made to remove it. If removal of the collar is not feasible, it will be left in the hole and perforated as needed to allow an annular seal to be placed to a depth of at least 25 feet bgs. In areas of agricultural use, the surface casing will be cut at least 5 feet bgs and removed.

If the collar cannot be removed, it will be perforated from at least 20 feet below the bedrock-LBFU contact to at least 20 feet above the contact; from at least 20 feet below the base of the MFGU to at least 20 feet above the top of the MFGU; and from at least 25 feet bgs to 5 feet bgs.

A tremie pipe will be used to place Type V cement in the open core hole from the bottom of the core hole to the top of the core hole. Cement retainers, as described above, will be used to force cement grout into the annulus and behind perforated intervals, as necessary.

If the hole has been obstructed, as much cement as possible will be placed from 100 feet below the LBFU-bedrock contact to the top of the core hole.

The volume of Type V cement will be recorded and will not be less than the estimated volume of material required to fill each interval. All cement grout will consist of Type V cement, or equivalent approved in accordance with the UIC Permit.

Certification

I certify under the penalty of law that I have personally examined and am familiar with the information submitted in this document and all attachments and that, based on my inquiry of those individuals immediately responsible for obtaining the information, I believe that the information is true, accurate, and complete. I am aware that there are significant penalties for submitting false information, including the possibliity of fine and imprisonment. (Ref. 40 CFR § 144.32)

Name and Official Title *(Please type or print)*	Signature	Date Signed
Dan Johnson, VP - General Manager		10/3/2019

INSTRUCTIONS FOR FORM 7520-19

This form replaces forms 7520-12 and 7520-14. Use this form only when work is planned or has occurred that affects the well's construction or operation as an injection well, including work on the casing, tubing or packer (or for shallow Class V wells, the subsurface fluid emplacement network). Use one form per injection well. While reports or other information developed by contractors or service companies may be attached, this form must be signed by a responsible entity as described at 40 CFR 144.32. Note: operators closing Class V wells should use Form 7520-17.

NAME, ADDRESS, PHONE AND/OR EMAIL OF PERMITTEE: Enter the name and street address, city/town, state, and ZIP code of the permittee. Also provide an email address (if available) and/or a phone number.

PERMIT OR EPA ID NUMBER: Enter the well identification number or permit number assigned to the well by the EPA or the permitting authority.

API NUMBER: Enter the number assigned by the local jurisdiction (usually a State Oil and Gas Agency) using the American Petroleum Institute standard numbering system.

FULL WELL NAME: Enter the full name of the well or project.

Enter the **STATE** and **COUNTY** where the well is located. For States that do not have counties, use the name of that State's equivalent jurisdiction at a more local level.

WELL LOCATION: Fill in the complete township, range, and section to the nearest quarter-quarter section. A township is north or south of the baseline, and a range is east or west of the principal meridian (e.g., T12N, R34W). Also include the distance, in feet, from the nearest north or south line and nearest east or west line of the quarter-section. Also, enter the **latitude** and **longitude** of the well in decimal degrees, to five or six places if possible; be sure to include a negative sign for the longitude of a well in the Western Hemisphere and a negative sign for the latitude of a well in the Southern Hemisphere.

Enter the **WELL CLASS,** i.e., the class of injection well as defined in 40 CFR 144.6.

TIMING OF THE ACTION: Check ***Notice prior to work*** if the activity has not yet occurred (i.e., is planned). Check ***Report after work*** if the activity described has already occurred. As appropriate, include the date the activity is expected to start or the date the activity was completed. (Note this may not be available, e.g., for a plugging plan submitted with a permit application.)

TYPE OF ACTION: Check the appropriate box to describe the kind of activity being reported. Check ***Well Rework*** for work that was/will be performed on the well after it has already been in operation as an injection well. Check ***Plugging and Abandonment*** to report on plans for or descriptions of final closure/plugging after use as an injection well. Check ***Conversion to a Non-Injection Well*** if the well is to be converted to something other than an injection well.

Provide a **NARRATIVE DESCRIPTION** of the work planned to be performed, or that was performed. The narrative should include a description of the main procedures planned or that occurred during the work activity. A service company report, daily report, or similar document may be attached if it includes all the requested information and is clear and legible.

For well reworks, include the following information: The reason for the well rework; depths of activity; type of activity; changes to injection well configuration, well casing, or cement behind casing; any plug added to the well and its depth; any newly drilled interval and its depth; method(s) to demonstrate that the well has mechanical integrity (as applicable); and any deviations from the approved rework plan (as applicable).

For a well plugging plan, include the following information: Reason for the well plugging; number of plugs placed, and their depths; materials used as plugs (e.g., cast iron bridge plug, cement, cement retainer); method to set plugs; and wait-on-cement times, if any. Also provide one or more cost estimates from an independent firm in the business of plugging and abandoning wells to plug the well as described in the plan.

For well plugging affidavit, include the following information: Reason for the well plugging; number of plugs placed, and their depths; materials used as plugs (e.g., cast iron bridge plug, cement, cement retainer); method to set plugs; wait-on-cement times, if any; and any deviations from the approved plugging plan (if applicable).

For conversion to a non-injection well, include the following information: Depths of activity; type of activity; changes to injection well configuration, well casing, or cement behind casing; any plug added to the well and its depth; any newly drilled interval and its depth; depths of new perforations; and method(s) to demonstrate that the well has mechanical integrity (as applicable).

For all of the above activities, include a well sketch depicting the work, results of well tests/logging performed, service company tickets, and any other available information demonstrating how the work was/is to be performed. Also, specify whether depths are below ground surface, relative to Kelly bushing, etc.

CERTIFICATION: This form must be signed and dated by either: a responsible corporate officer for a corporation, by a general partner for a partnership, by the proprietor of a sole proprietorship, or by a principal executive or ranking elected official for a public agency.

PAPERWORK REDUCTION ACT NOTICE: The public reporting and recordkeeping burden for this collection of information is estimated to average between 6.0 and 7.9 hours per response, depending on the injection well class. Burden means the total time, effort, or financial resource expended by persons to generate, maintain, retain, or disclose or provide information to or for a Federal Agency. This includes the time needed to review instructions; develop, acquire, install, and utilize technology and systems for the purposes of collecting, validating, and verifying information, processing and maintaining information, and disclosing and providing information; adjust the existing ways to comply with any previously applicable instructions and requirements; train personnel to be able to respond to the collection of information; search data sources; complete and review the collection of information; and, transmit or otherwise disclose the information. An agency may not conduct or sponsor, and a person is not required to respond to, a collection of information unless it displays a currently valid OMB control number. Send comments on the Agency's need for this information, the accuracy of the provided burden estimates, and any suggested methods for minimizing respondent burden, including the use of automated collection techniques to Director, Collection Strategies Division, U.S. Environmental Protection Agency (2822), 1200 Pennsylvania Ave., NW., Washington, D.C. 20460. Include the OMB control number in any correspondence. Do not send the completed forms to this address.

AS-BUILT COREHOLE 264MF

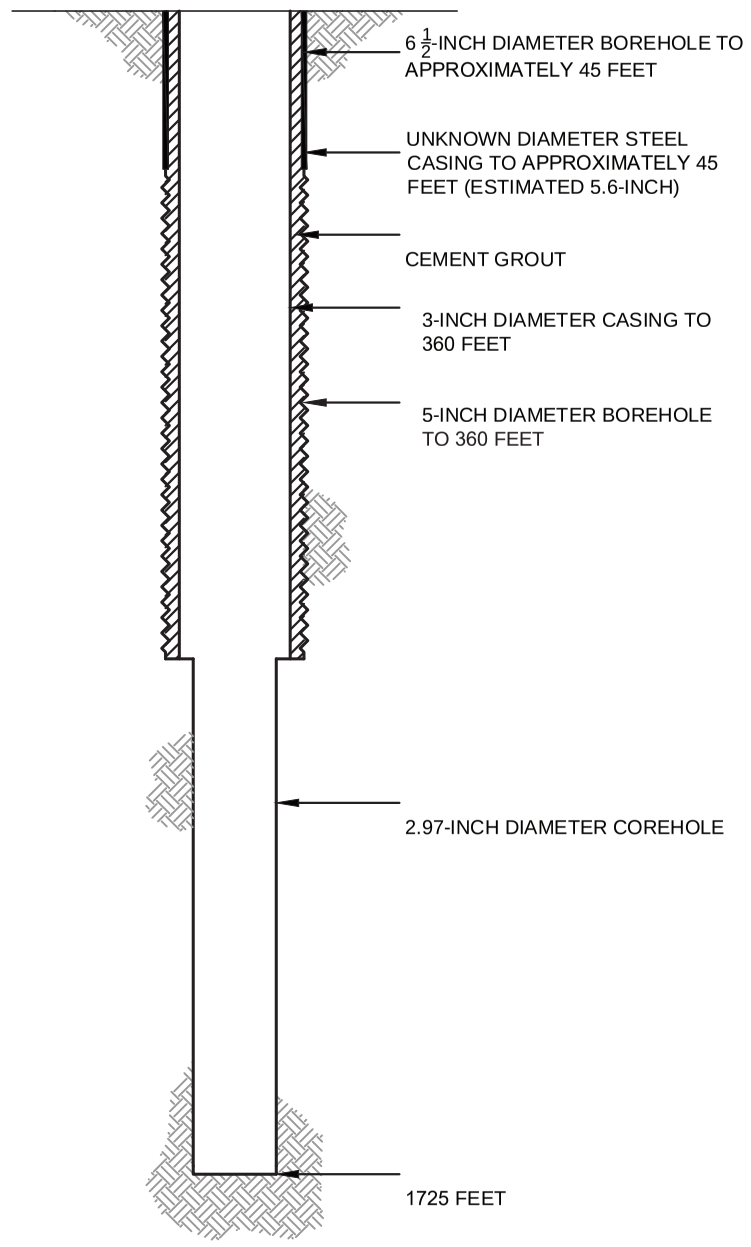

PROPOSED PLUGGING AND ABANDONMENT COREHOLE 264MF

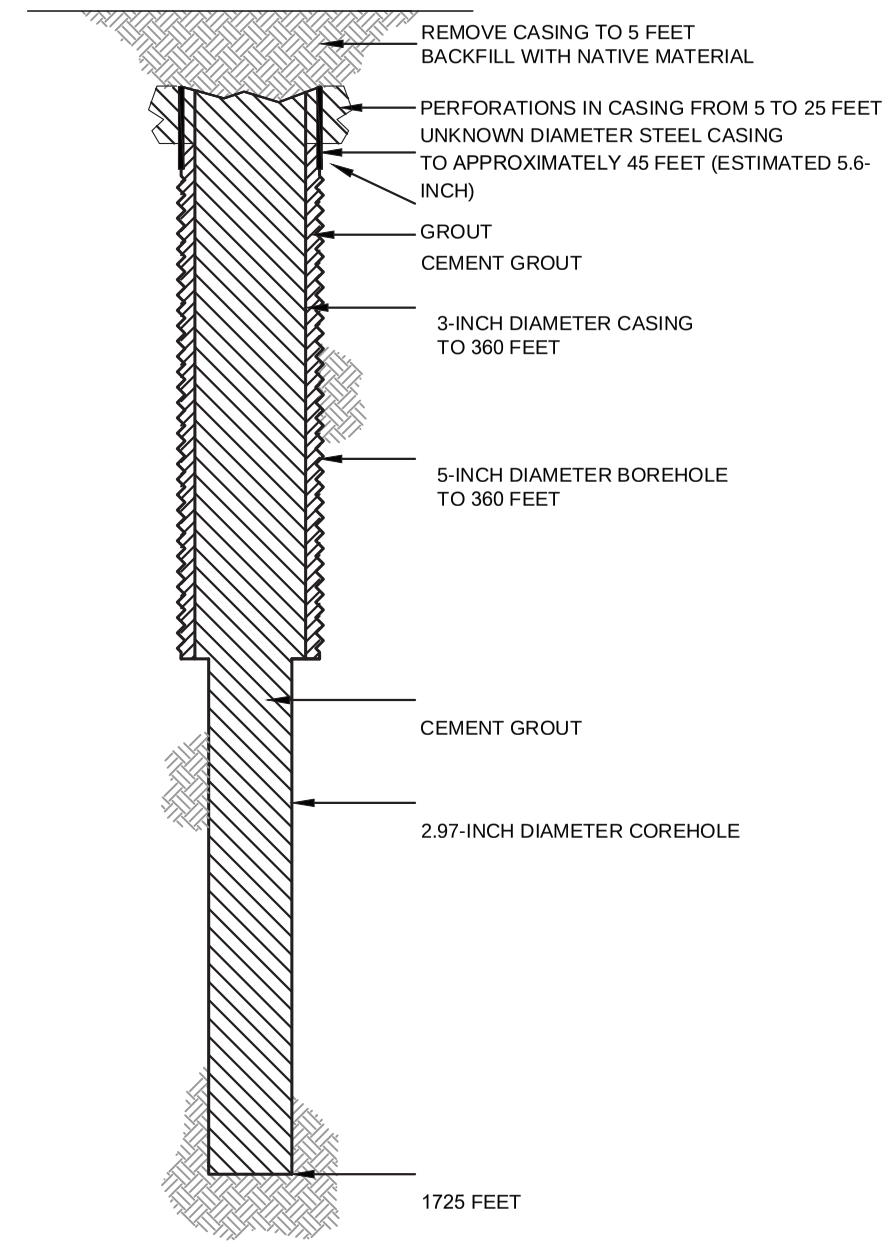

HALEY ALDRICH

FLORENCE COPPER, INC.
FLORENCE, ARIZONA

COREHOLE 264MF DIAGRAM

FLORENCE COPPER INC.

NOT TO SCALE
SEPTEMBER 2019

FIGURE 1

MOBINI, GITA Printed: 4/21/2017 12:00 PM Layout: ABANDON (2)
G:\PROJECTS\CURIS RESOURCES\38706-CURIS FEASIBILITY\DRAWINGS\EPA\WELL ABANDON\415S_ABANDON.DWG

OMB No. 2040-0042 Approval Expires 4/30/2022

United States Environmental Protection Agency

WELL REWORK RECORD, PLUGGING AND ABANDONMENT PLAN, OR PLUGGING AND ABANDONMENT AFFIDAVIT

Name and Address, Phone Number and/or Email of Permittee

Florence Copper Project
1575 W Hunt Hwy,
Florence, AZ 85132

Permit or EPA ID Number	API Number	Full Well Name
R9UIC-AZ3-FY11-1		265MF

State	County
Arizona	Pinal

Locate well in two directions from nearest lines of quarter section and drilling unit

Latitude 33.04795165

Longitude -111.426897

Surface Location

SW **1/4 of** SE **1/4 of Section** 28 **Township** 4S **Range** 9E

_____ **ft. from (N/S)** _____ **Line of quarter section**

_____ **ft. from (E/W)** _____ **Line of quarter section.**

Well Class	Timing of Action (pick one)	Type of Action (pick one)
☐ Class I ☐ Class II ☑ Class III ☐ Class V	☑ Notice Prior to Work Date Expected to Commence March 2021 ☐ Report After Work Date Work Ended	☐ Well Rework ☑ Plugging and Abandonment ☐ Conversion to a Non-Injection Well

Provide a narrative description of the work planned to be performed, or that was performed. Use additional pages as necessary. See instructions.

A workover rig capable of performing the required abandonment operations at the required depths will be moved in and set up over the core hole. The core hole will be inspected to determine the depth to which the hole remains open and if any obstructions are present in the core hole; the presence and condition of any existing collar will also be documented. If necessary, the core hole will be cleaned out to a depth of at least 100 feet below the bedrock-LBFU contact to enable placement of cement seals.

If collar is present, an attempt will be made to remove it. If removal of the collar is not feasible, it will be left in the hole and perforated as needed to allow an annular seal to be placed to a depth of at least 25 feet bgs. In areas of agricultural use, the surface casing will be cut at least 5 feet bgs and removed.

If the collar cannot be removed, it will be perforated from at least 20 feet below the bedrock-LBFU contact to at least 20 feet above the contact; from at least 20 feet below the base of the MFGU to at least 20 feet above the top of the MFGU; and from at least 25 feet bgs to 5 feet bgs.

A tremie pipe will be used to place Type V cement in the open core hole from the bottom of the core hole to the top of the core hole. Cement retainers, as described above, will be used to force cement grout into the annulus and behind perforated intervals, as necessary.

If the hole has been obstructed, as much cement as possible will be placed from 100 feet below the LBFU-bedrock contact to the top of the core hole.

The volume of Type V cement will be recorded and will not be less than the estimated volume of material required to fill each interval. All cement grout will consist of Type V cement, or equivalent approved in accordance with the UIC Permit.

Certification

I certify under the penalty of law that I have personally examined and am familiar with the information submitted in this document and all attachments and that, based on my inquiry of those individuals immediately responsible for obtaining the information, I believe that the information is true, accurate, and complete. I am aware that there are significant penalties for submitting false information, including the possibliity of fine and imprisonment. (Ref. 40 CFR § 144.32)

Name and Official Title *(Please type or print)*	Signature	Date Signed
Dan Johnson, VP - General Manager		10/3/2019

INSTRUCTIONS FOR FORM 7520-19

This form replaces forms 7520-12 and 7520-14. Use this form only when work is planned or has occurred that affects the well's construction or operation as an injection well, including work on the casing, tubing or packer (or for shallow Class V wells, the subsurface fluid emplacement network). Use one form per injection well. While reports or other information developed by contractors or service companies may be attached, this form must be signed by a responsible entity as described at 40 CFR 144.32. Note: operators closing Class V wells should use Form 7520-17.

NAME, ADDRESS, PHONE AND/OR EMAIL OF PERMITTEE: Enter the name and street address, city/town, state, and ZIP code of the permittee. Also provide an email address (if available) and/or a phone number.

PERMIT OR EPA ID NUMBER: Enter the well identification number or permit number assigned to the well by the EPA or the permitting authority.

API NUMBER: Enter the number assigned by the local jurisdiction (usually a State Oil and Gas Agency) using the American Petroleum Institute standard numbering system.

FULL WELL NAME: Enter the full name of the well or project.

Enter the **STATE** and **COUNTY** where the well is located. For States that do not have counties, use the name of that State's equivalent jurisdiction at a more local level.

WELL LOCATION: Fill in the complete township, range, and section to the nearest quarter-quarter section. A township is north or south of the baseline, and a range is east or west of the principal meridian (e.g., T12N, R34W). Also include the distance, in feet, from the nearest north or south line and nearest east or west line of the quarter-section. Also, enter the **latitude** and **longitude** of the well in decimal degrees, to five or six places if possible; be sure to include a negative sign for the longitude of a well in the Western Hemisphere and a negative sign for the latitude of a well in the Southern Hemisphere.

Enter the **WELL CLASS,** i.e., the class of injection well as defined in 40 CFR 144.6.

TIMING OF THE ACTION: Check ***Notice prior to work*** if the activity has not yet occurred (i.e., is planned). Check ***Report after work*** if the activity described has already occurred. As appropriate, include the date the activity is expected to start or the date the activity was completed. (Note this may not be available, e.g., for a plugging plan submitted with a permit application.)

TYPE OF ACTION: Check the appropriate box to describe the kind of activity being reported. Check ***Well Rework*** for work that was/will be performed on the well after it has already been in operation as an injection well. Check ***Plugging and Abandonment*** to report on plans for or descriptions of final closure/plugging after use as an injection well. Check ***Conversion to a Non-Injection Well*** if the well is to be converted to something other than an injection well.

Provide a **NARRATIVE DESCRIPTION** of the work planned to be performed, or that was performed. The narrative should include a description of the main procedures planned or that occurred during the work activity. A service company report, daily report, or similar document may be attached if it includes all the requested information and is clear and legible.

For well reworks, include the following information: The reason for the well rework; depths of activity; type of activity; changes to injection well configuration, well casing, or cement behind casing; any plug added to the well and its depth; any newly drilled interval and its depth; method(s) to demonstrate that the well has mechanical integrity (as applicable); and any deviations from the approved rework plan (as applicable).

For a well plugging plan, include the following information: Reason for the well plugging; number of plugs placed, and their depths; materials used as plugs (e.g., cast iron bridge plug, cement, cement retainer); method to set plugs; and wait-on-cement times, if any. Also provide one or more cost estimates from an independent firm in the business of plugging and abandoning wells to plug the well as described in the plan.

For well plugging affidavit, include the following information: Reason for the well plugging; number of plugs placed, and their depths; materials used as plugs (e.g., cast iron bridge plug, cement, cement retainer); method to set plugs; wait-on-cement times, if any; and any deviations from the approved plugging plan (if applicable).

For conversion to a non-injection well, include the following information: Depths of activity; type of activity; changes to injection well configuration, well casing, or cement behind casing; any plug added to the well and its depth; any newly drilled interval and its depth; depths of new perforations; and method(s) to demonstrate that the well has mechanical integrity (as applicable).

For all of the above activities, include a well sketch depicting the work, results of well tests/logging performed, service company tickets, and any other available information demonstrating how the work was/is to be performed. Also, specify whether depths are below ground surface, relative to Kelly bushing, etc.

CERTIFICATION: This form must be signed and dated by either: a responsible corporate officer for a corporation, by a general partner for a partnership, by the proprietor of a sole proprietorship, or by a principal executive or ranking elected official for a public agency.

PAPERWORK REDUCTION ACT NOTICE: The public reporting and recordkeeping burden for this collection of information is estimated to average between 6.0 and 7.9 hours per response, depending on the injection well class. Burden means the total time, effort, or financial resource expended by persons to generate, maintain, retain, or disclose or provide information to or for a Federal Agency. This includes the time needed to review instructions; develop, acquire, install, and utilize technology and systems for the purposes of collecting, validating, and verifying information, processing and maintaining information, and disclosing and providing information; adjust the existing ways to comply with any previously applicable instructions and requirements; train personnel to be able to respond to the collection of information; search data sources; complete and review the collection of information; and, transmit or otherwise disclose the information. An agency may not conduct or sponsor, and a person is not required to respond to, a collection of information unless it displays a currently valid OMB control number. Send comments on the Agency's need for this information, the accuracy of the provided burden estimates, and any suggested methods for minimizing respondent burden, including the use of automated collection techniques to Director, Collection Strategies Division, U.S. Environmental Protection Agency (2822), 1200 Pennsylvania Ave., NW., Washington, D.C. 20460. Include the OMB control number in any correspondence. Do not send the completed forms to this address.

AS-BUILT COREHOLE 265MF

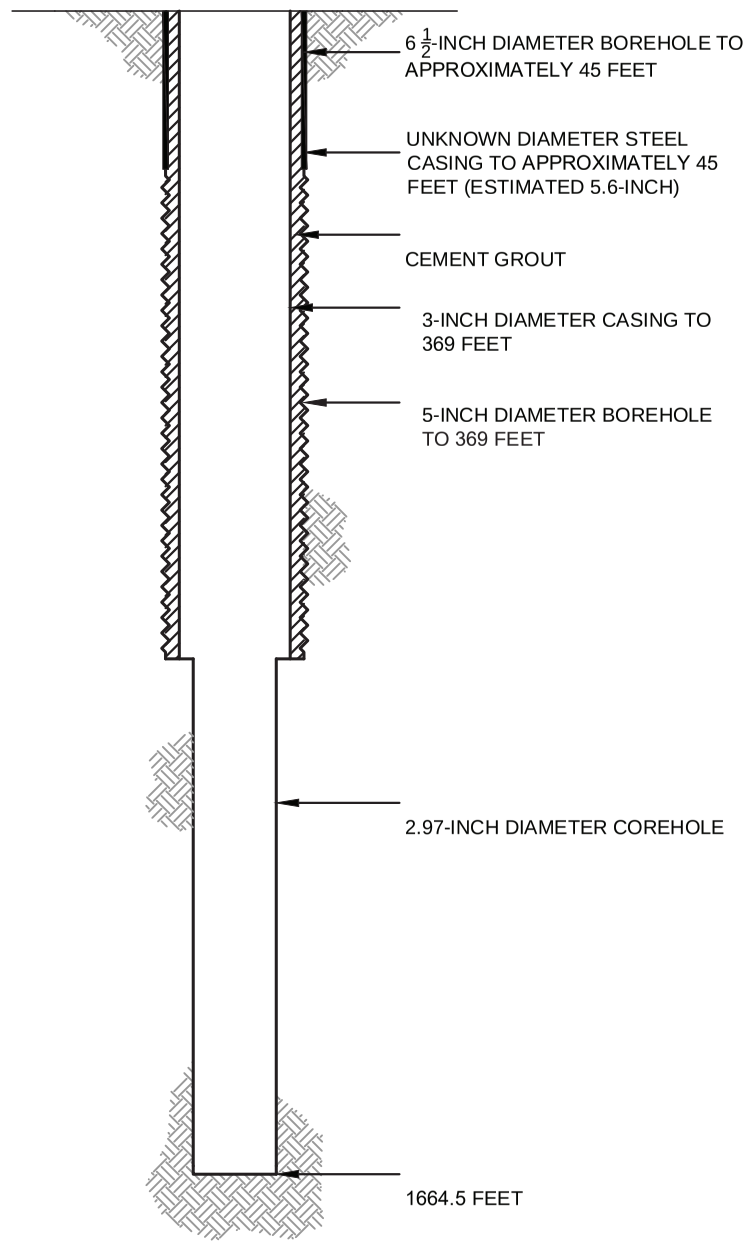

PROPOSED PLUGGING AND ABANDONMENT COREHOLE 265MF

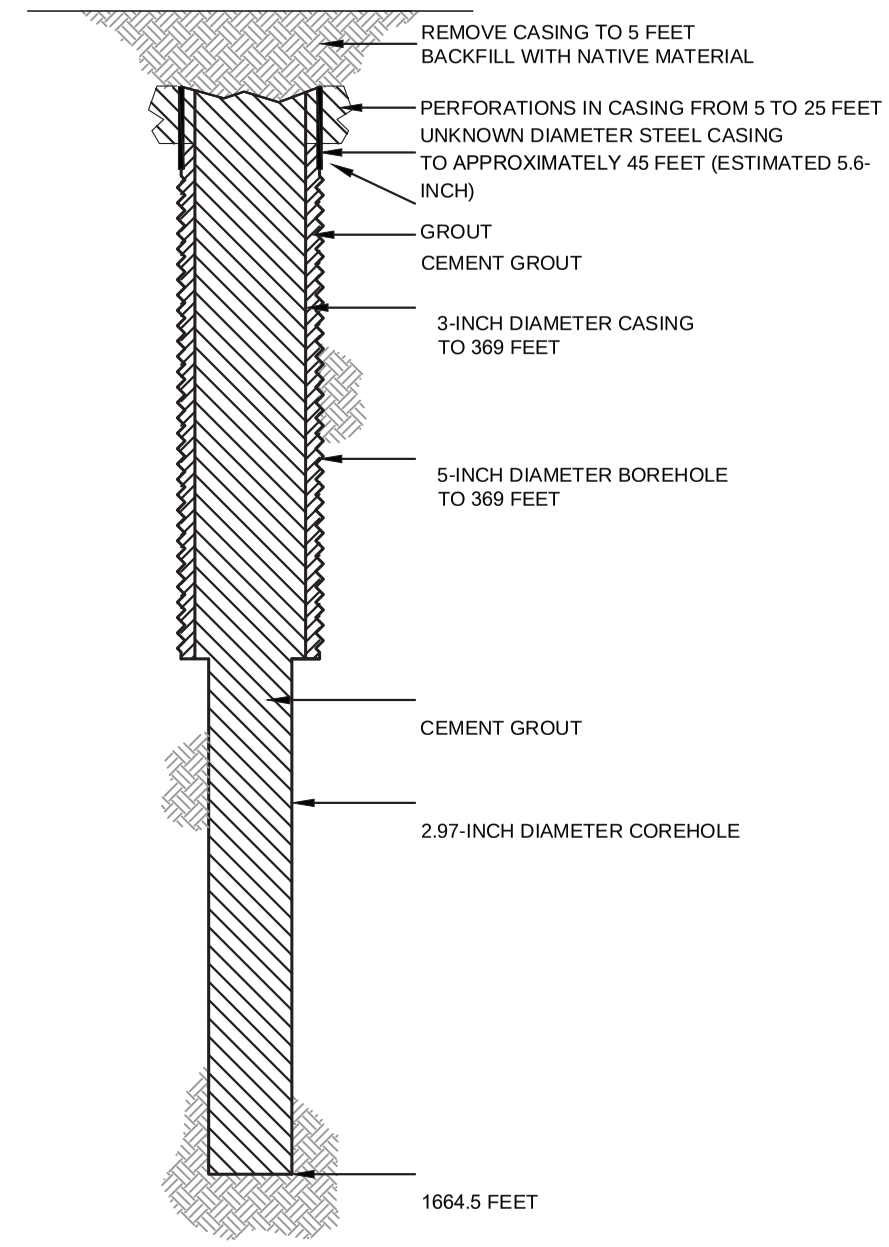

HALEY ALDRICH

FLORENCE COPPER, INC.
FLORENCE, ARIZONA

COREHOLE 265MF DIAGRAM

FLORENCE COPPER INC.

NOT TO SCALE
SEPTEMBER 2019

FIGURE 1

MOBINI, GITA Printed: 4/21/2017 12:00 PM Layout: ABANDON (2)
G:\PROJECTS\CURIS RESOURCES\38706-CURIS FEASIBILITY\DRAWINGS\EPA\WELL ABANDON\415S_ABANDON.DWG

OMB No. 2040-0042 Approval Expires 4/30/2022

United States Environmental Protection Agency

WELL REWORK RECORD, PLUGGING AND ABANDONMENT PLAN, OR PLUGGING AND ABANDONMENT AFFIDAVIT

Name and Address, Phone Number and/or Email of Permittee

Florence Copper Project
1575 W Hunt Hwy,
Florence, AZ 85132

Permit or EPA ID Number	API Number	Full Well Name
R9UIC-AZ3-FY11-1		266S

State	County
Arizona	Pinal

Locate well in two directions from nearest lines of quarter section and drilling unit

Latitude 33.04974386

Longitude -111.4281164

Surface Location

NW **1/4 of** SE **1/4 of Section** 28 **Township** 4S **Range** 9E

_____ **ft. from (N/S)** _____ **Line of quarter section**

_____ **ft. from (E/W)** _____ **Line of quarter section.**

Well Class	Timing of Action (pick one)	Type of Action (pick one)
☐ Class I ☐ Class II ☑ Class III ☐ Class V	☑ Notice Prior to Work Date Expected to Commence March 2021 ☐ Report After Work Date Work Ended	☐ Well Rework ☑ Plugging and Abandonment ☐ Conversion to a Non-Injection Well

Provide a narrative description of the work planned to be performed, or that was performed. Use additional pages as necessary. See instructions.

A workover rig capable of performing the required abandonment operations at the required depths will be moved in and set up over the core hole. The core hole will be inspected to determine the depth to which the hole remains open and if any obstructions are present in the core hole; the presence and condition of any existing collar will also be documented. If necessary, the core hole will be cleaned out to a depth of at least 100 feet below the bedrock-LBFU contact to enable placement of cement seals.

If collar is present, an attempt will be made to remove it. If removal of the collar is not feasible, it will be left in the hole and perforated as needed to allow an annular seal to be placed to a depth of at least 25 feet bgs. In areas of agricultural use, the surface casing will be cut at least 5 feet bgs and removed.

If the collar cannot be removed, it will be perforated from at least 20 feet below the bedrock-LBFU contact to at least 20 feet above the contact; from at least 20 feet below the base of the MFGU to at least 20 feet above the top of the MFGU; and from at least 25 feet bgs to 5 feet bgs.

A tremie pipe will be used to place Type V cement in the open core hole from the bottom of the core hole to the top of the core hole. Cement retainers, as described above, will be used to force cement grout into the annulus and behind perforated intervals, as necessary.

If the hole has been obstructed, as much cement as possible will be placed from 100 feet below the LBFU-bedrock contact to the top of the core hole.

The volume of Type V cement will be recorded and will not be less than the estimated volume of material required to fill each interval. All cement grout will consist of Type V cement, or equivalent approved in accordance with the UIC Permit.

Certification

I certify under the penalty of law that I have personally examined and am familiar with the information submitted in this document and all attachments and that, based on my inquiry of those individuals immediately responsible for obtaining the information, I believe that the information is true, accurate, and complete. I am aware that there are significant penalties for submitting false information, including the possibliity of fine and imprisonment. (Ref. 40 CFR § 144.32)

Name and Official Title *(Please type or print)*	Signature	Date Signed
Dan Johnson, VP - General Manager		10/3/2019

INSTRUCTIONS FOR FORM 7520-19

This form replaces forms 7520-12 and 7520-14. Use this form only when work is planned or has occurred that affects the well's construction or operation as an injection well, including work on the casing, tubing or packer (or for shallow Class V wells, the subsurface fluid emplacement network). Use one form per injection well. While reports or other information developed by contractors or service companies may be attached, this form must be signed by a responsible entity as described at 40 CFR 144.32. Note: operators closing Class V wells should use Form 7520-17.

NAME, ADDRESS, PHONE AND/OR EMAIL OF PERMITTEE: Enter the name and street address, city/town, state, and ZIP code of the permittee. Also provide an email address (if available) and/or a phone number.

PERMIT OR EPA ID NUMBER: Enter the well identification number or permit number assigned to the well by the EPA or the permitting authority.

API NUMBER: Enter the number assigned by the local jurisdiction (usually a State Oil and Gas Agency) using the American Petroleum Institute standard numbering system.

FULL WELL NAME: Enter the full name of the well or project.

Enter the **STATE** and **COUNTY** where the well is located. For States that do not have counties, use the name of that State's equivalent jurisdiction at a more local level.

WELL LOCATION: Fill in the complete township, range, and section to the nearest quarter-quarter section. A township is north or south of the baseline, and a range is east or west of the principal meridian (e.g., T12N, R34W). Also include the distance, in feet, from the nearest north or south line and nearest east or west line of the quarter-section. Also, enter the **latitude** and **longitude** of the well in decimal degrees, to five or six places if possible; be sure to include a negative sign for the longitude of a well in the Western Hemisphere and a negative sign for the latitude of a well in the Southern Hemisphere.

Enter the **WELL CLASS,** i.e., the class of injection well as defined in 40 CFR 144.6.

TIMING OF THE ACTION: Check ***Notice prior to work*** if the activity has not yet occurred (i.e., is planned). Check ***Report after work*** if the activity described has already occurred. As appropriate, include the date the activity is expected to start or the date the activity was completed. (Note this may not be available, e.g., for a plugging plan submitted with a permit application.)

TYPE OF ACTION: Check the appropriate box to describe the kind of activity being reported. Check ***Well Rework*** for work that was/will be performed on the well after it has already been in operation as an injection well. Check ***Plugging and Abandonment*** to report on plans for or descriptions of final closure/plugging after use as an injection well. Check ***Conversion to a Non-Injection Well*** if the well is to be converted to something other than an injection well.

Provide a **NARRATIVE DESCRIPTION** of the work planned to be performed, or that was performed. The narrative should include a description of the main procedures planned or that occurred during the work activity. A service company report, daily report, or similar document may be attached if it includes all the requested information and is clear and legible.

For well reworks, include the following information: The reason for the well rework; depths of activity; type of activity; changes to injection well configuration, well casing, or cement behind casing; any plug added to the well and its depth; any newly drilled interval and its depth; method(s) to demonstrate that the well has mechanical integrity (as applicable); and any deviations from the approved rework plan (as applicable).

For a well plugging plan, include the following information: Reason for the well plugging; number of plugs placed, and their depths; materials used as plugs (e.g., cast iron bridge plug, cement, cement retainer); method to set plugs; and wait-on-cement times, if any. Also provide one or more cost estimates from an independent firm in the business of plugging and abandoning wells to plug the well as described in the plan.

For well plugging affidavit, include the following information: Reason for the well plugging; number of plugs placed, and their depths; materials used as plugs (e.g., cast iron bridge plug, cement, cement retainer); method to set plugs; wait-on-cement times, if any; and any deviations from the approved plugging plan (if applicable).

For conversion to a non-injection well, include the following information: Depths of activity; type of activity; changes to injection well configuration, well casing, or cement behind casing; any plug added to the well and its depth; any newly drilled interval and its depth; depths of new perforations; and method(s) to demonstrate that the well has mechanical integrity (as applicable).

For all of the above activities, include a well sketch depicting the work, results of well tests/logging performed, service company tickets, and any other available information demonstrating how the work was/is to be performed. Also, specify whether depths are below ground surface, relative to Kelly bushing, etc.

CERTIFICATION: This form must be signed and dated by either: a responsible corporate officer for a corporation, by a general partner for a partnership, by the proprietor of a sole proprietorship, or by a principal executive or ranking elected official for a public agency.

PAPERWORK REDUCTION ACT NOTICE: The public reporting and recordkeeping burden for this collection of information is estimated to average between 6.0 and 7.9 hours per response, depending on the injection well class. Burden means the total time, effort, or financial resource expended by persons to generate, maintain, retain, or disclose or provide information to or for a Federal Agency. This includes the time needed to review instructions; develop, acquire, install, and utilize technology and systems for the purposes of collecting, validating, and verifying information, processing and maintaining information, and disclosing and providing information; adjust the existing ways to comply with any previously applicable instructions and requirements; train personnel to be able to respond to the collection of information; search data sources; complete and review the collection of information; and, transmit or otherwise disclose the information. An agency may not conduct or sponsor, and a person is not required to respond to, a collection of information unless it displays a currently valid OMB control number. Send comments on the Agency's need for this information, the accuracy of the provided burden estimates, and any suggested methods for minimizing respondent burden, including the use of automated collection techniques to Director, Collection Strategies Division, U.S. Environmental Protection Agency (2822), 1200 Pennsylvania Ave., NW., Washington, D.C. 20460. Include the OMB control number in any correspondence. Do not send the completed forms to this address.

AS-BUILT COREHOLE 266S

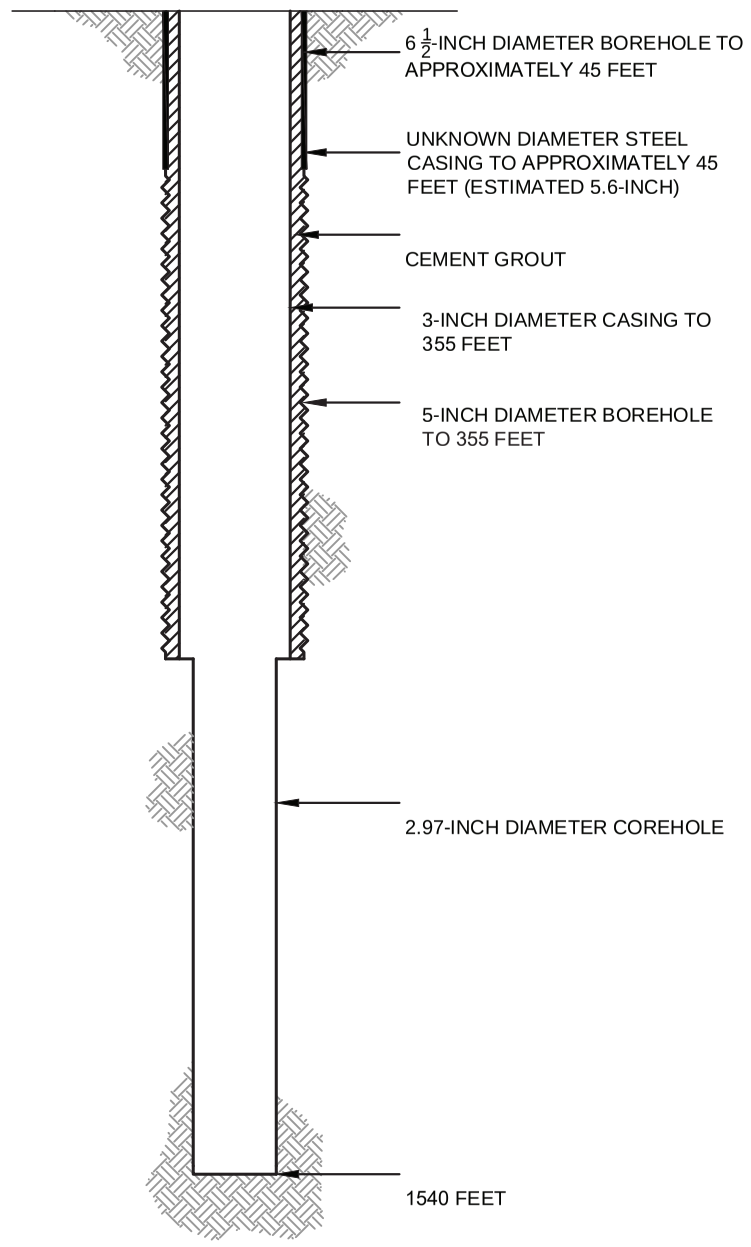

PROPOSED PLUGGING AND ABANDONMENT COREHOLE 266S

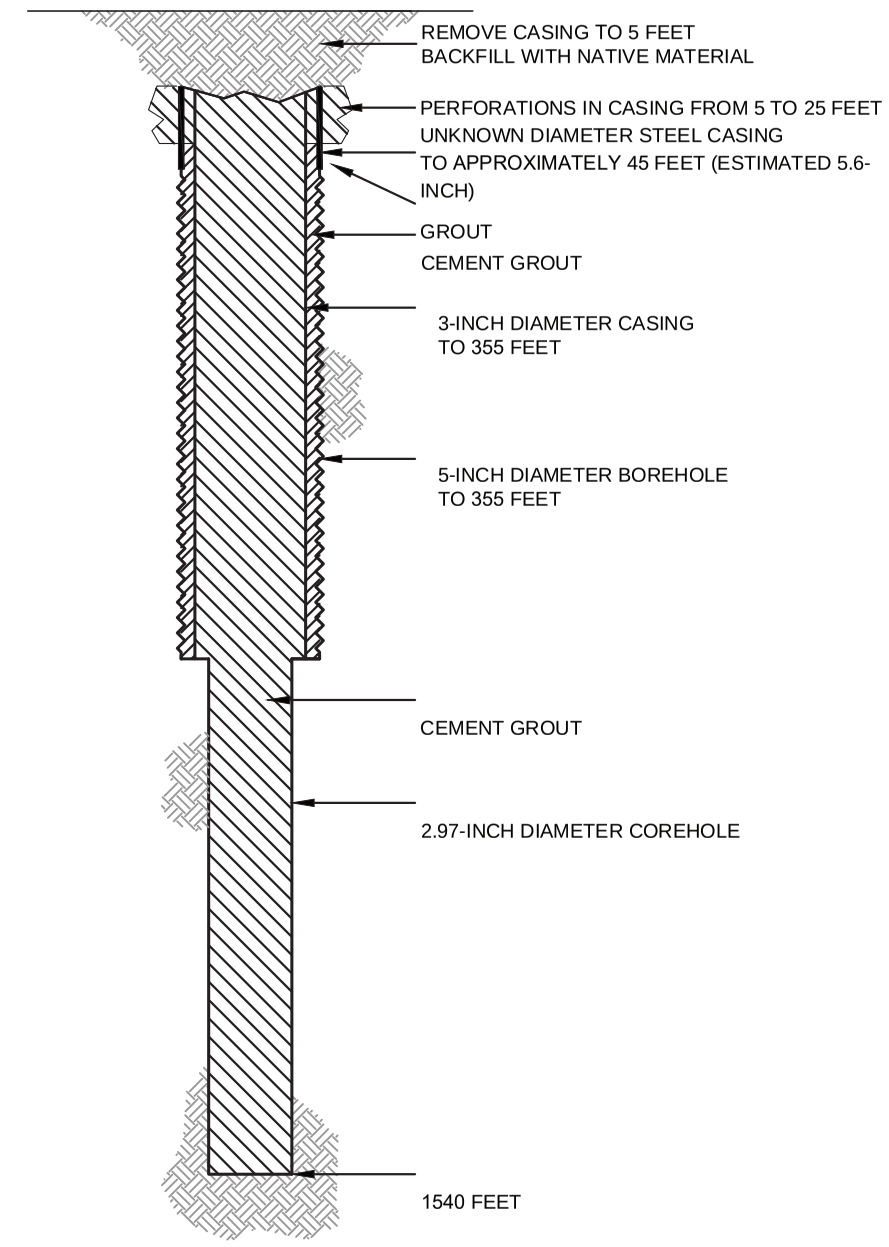

HALEY ALDRICH

FLORENCE COPPER, INC.
FLORENCE, ARIZONA

COREHOLE 266S DIAGRAM

FLORENCE COPPER INC.

NOT TO SCALE
SEPTEMBER 2019

FIGURE 1

MOBINI, GITA Printed: 4/21/2017 12:00 PM Layout: ABANDON (2)
G:\PROJECTS\CURIS RESOURCES\38706-CURIS FEASIBILITY\DRAWINGS\EPA\WELL ABANDON\415S_ABANDON.DWG

OMB No. 2040-0042 Approval Expires 4/30/2022

United States Environmental Protection Agency

WELL REWORK RECORD, PLUGGING AND ABANDONMENT PLAN, OR PLUGGING AND ABANDONMENT AFFIDAVIT

Name and Address, Phone Number and/or Email of Permittee

Florence Copper Project
1575 W Hunt Hwy,
Florence, AZ 85132

Permit or EPA ID Number	API Number	Full Well Name
R9UIC-AZ3-FY11-1		267S

State	County
Arizona	Pinal

Locate well in two directions from nearest lines of quarter section and drilling unit

Latitude 33.04913371

Longitude -111.4252596

Surface Location

SE **1/4 of** SE **1/4 of Section** 28 **Township** 4S **Range** 9E

_____ **ft. from (N/S)** _____ **Line of quarter section**

_____ **ft. from (E/W)** _____ **Line of quarter section.**

Well Class	Timing of Action (pick one)	Type of Action (pick one)
☐ Class I ☐ Class II ☑ Class III ☐ Class V	☑ Notice Prior to Work Date Expected to Commence March 2021 ☐ Report After Work Date Work Ended	☐ Well Rework ☑ Plugging and Abandonment ☐ Conversion to a Non-Injection Well

Provide a narrative description of the work planned to be performed, or that was performed. Use additional pages as necessary. See instructions.

A workover rig capable of performing the required abandonment operations at the required depths will be moved in and set up over the core hole. The core hole will be inspected to determine the depth to which the hole remains open and if any obstructions are present in the core hole; the presence and condition of any existing collar will also be documented. If necessary, the core hole will be cleaned out to a depth of at least 100 feet below the bedrock-LBFU contact to enable placement of cement seals.

If collar is present, an attempt will be made to remove it. If removal of the collar is not feasible, it will be left in the hole and perforated as needed to allow an annular seal to be placed to a depth of at least 25 feet bgs. In areas of agricultural use, the surface casing will be cut at least 5 feet bgs and removed.

If the collar cannot be removed, it will be perforated from at least 20 feet below the bedrock-LBFU contact to at least 20 feet above the contact; from at least 20 feet below the base of the MFGU to at least 20 feet above the top of the MFGU; and from at least 25 feet bgs to 5 feet bgs.

A tremie pipe will be used to place Type V cement in the open core hole from the bottom of the core hole to the top of the core hole. Cement retainers, as described above, will be used to force cement grout into the annulus and behind perforated intervals, as necessary.

If the hole has been obstructed, as much cement as possible will be placed from 100 feet below the LBFU-bedrock contact to the top of the core hole.

The volume of Type V cement will be recorded and will not be less than the estimated volume of material required to fill each interval. All cement grout will consist of Type V cement, or equivalent approved in accordance with the UIC Permit.

Certification

I certify under the penalty of law that I have personally examined and am familiar with the information submitted in this document and all attachments and that, based on my inquiry of those individuals immediately responsible for obtaining the information, I believe that the information is true, accurate, and complete. I am aware that there are significant penalties for submitting false information, including the possibliity of fine and imprisonment. (Ref. 40 CFR § 144.32)

Name and Official Title *(Please type or print)*	Signature	Date Signed
Dan Johnson, VP - General Manager		10/3/2019

INSTRUCTIONS FOR FORM 7520-19

This form replaces forms 7520-12 and 7520-14. Use this form only when work is planned or has occurred that affects the well's construction or operation as an injection well, including work on the casing, tubing or packer (or for shallow Class V wells, the subsurface fluid emplacement network). Use one form per injection well. While reports or other information developed by contractors or service companies may be attached, this form must be signed by a responsible entity as described at 40 CFR 144.32. Note: operators closing Class V wells should use Form 7520-17.

NAME, ADDRESS, PHONE AND/OR EMAIL OF PERMITTEE: Enter the name and street address, city/town, state, and ZIP code of the permittee. Also provide an email address (if available) and/or a phone number.

PERMIT OR EPA ID NUMBER: Enter the well identification number or permit number assigned to the well by the EPA or the permitting authority.

API NUMBER: Enter the number assigned by the local jurisdiction (usually a State Oil and Gas Agency) using the American Petroleum Institute standard numbering system.

FULL WELL NAME: Enter the full name of the well or project.

Enter the **STATE** and **COUNTY** where the well is located. For States that do not have counties, use the name of that State's equivalent jurisdiction at a more local level.

WELL LOCATION: Fill in the complete township, range, and section to the nearest quarter-quarter section. A township is north or south of the baseline, and a range is east or west of the principal meridian (e.g., T12N, R34W). Also include the distance, in feet, from the nearest north or south line and nearest east or west line of the quarter-section. Also, enter the **latitude** and **longitude** of the well in decimal degrees, to five or six places if possible; be sure to include a negative sign for the longitude of a well in the Western Hemisphere and a negative sign for the latitude of a well in the Southern Hemisphere.

Enter the **WELL CLASS,** i.e., the class of injection well as defined in 40 CFR 144.6.

TIMING OF THE ACTION: Check ***Notice prior to work*** if the activity has not yet occurred (i.e., is planned). Check ***Report after work*** if the activity described has already occurred. As appropriate, include the date the activity is expected to start or the date the activity was completed. (Note this may not be available, e.g., for a plugging plan submitted with a permit application.)

TYPE OF ACTION: Check the appropriate box to describe the kind of activity being reported. Check ***Well Rework*** for work that was/will be performed on the well after it has already been in operation as an injection well. Check ***Plugging and Abandonment*** to report on plans for or descriptions of final closure/plugging after use as an injection well. Check ***Conversion to a Non-Injection Well*** if the well is to be converted to something other than an injection well.

Provide a **NARRATIVE DESCRIPTION** of the work planned to be performed, or that was performed. The narrative should include a description of the main procedures planned or that occurred during the work activity. A service company report, daily report, or similar document may be attached if it includes all the requested information and is clear and legible.

For well reworks, include the following information: The reason for the well rework; depths of activity; type of activity; changes to injection well configuration, well casing, or cement behind casing; any plug added to the well and its depth; any newly drilled interval and its depth; method(s) to demonstrate that the well has mechanical integrity (as applicable); and any deviations from the approved rework plan (as applicable).

For a well plugging plan, include the following information: Reason for the well plugging; number of plugs placed, and their depths; materials used as plugs (e.g., cast iron bridge plug, cement, cement retainer); method to set plugs; and wait-on-cement times, if any. Also provide one or more cost estimates from an independent firm in the business of plugging and abandoning wells to plug the well as described in the plan.

For well plugging affidavit, include the following information: Reason for the well plugging; number of plugs placed, and their depths; materials used as plugs (e.g., cast iron bridge plug, cement, cement retainer); method to set plugs; wait-on-cement times, if any; and any deviations from the approved plugging plan (if applicable).

For conversion to a non-injection well, include the following information: Depths of activity; type of activity; changes to injection well configuration, well casing, or cement behind casing; any plug added to the well and its depth; any newly drilled interval and its depth; depths of new perforations; and method(s) to demonstrate that the well has mechanical integrity (as applicable).

For all of the above activities, include a well sketch depicting the work, results of well tests/logging performed, service company tickets, and any other available information demonstrating how the work was/is to be performed. Also, specify whether depths are below ground surface, relative to Kelly bushing, etc.

CERTIFICATION: This form must be signed and dated by either: a responsible corporate officer for a corporation, by a general partner for a partnership, by the proprietor of a sole proprietorship, or by a principal executive or ranking elected official for a public agency.

PAPERWORK REDUCTION ACT NOTICE: The public reporting and recordkeeping burden for this collection of information is estimated to average between 6.0 and 7.9 hours per response, depending on the injection well class. Burden means the total time, effort, or financial resource expended by persons to generate, maintain, retain, or disclose or provide information to or for a Federal Agency. This includes the time needed to review instructions; develop, acquire, install, and utilize technology and systems for the purposes of collecting, validating, and verifying information, processing and maintaining information, and disclosing and providing information; adjust the existing ways to comply with any previously applicable instructions and requirements; train personnel to be able to respond to the collection of information; search data sources; complete and review the collection of information; and, transmit or otherwise disclose the information. An agency may not conduct or sponsor, and a person is not required to respond to, a collection of information unless it displays a currently valid OMB control number. Send comments on the Agency's need for this information, the accuracy of the provided burden estimates, and any suggested methods for minimizing respondent burden, including the use of automated collection techniques to Director, Collection Strategies Division, U.S. Environmental Protection Agency (2822), 1200 Pennsylvania Ave., NW., Washington, D.C. 20460. Include the OMB control number in any correspondence. Do not send the completed forms to this address.

AS-BUILT COREHOLE 267S

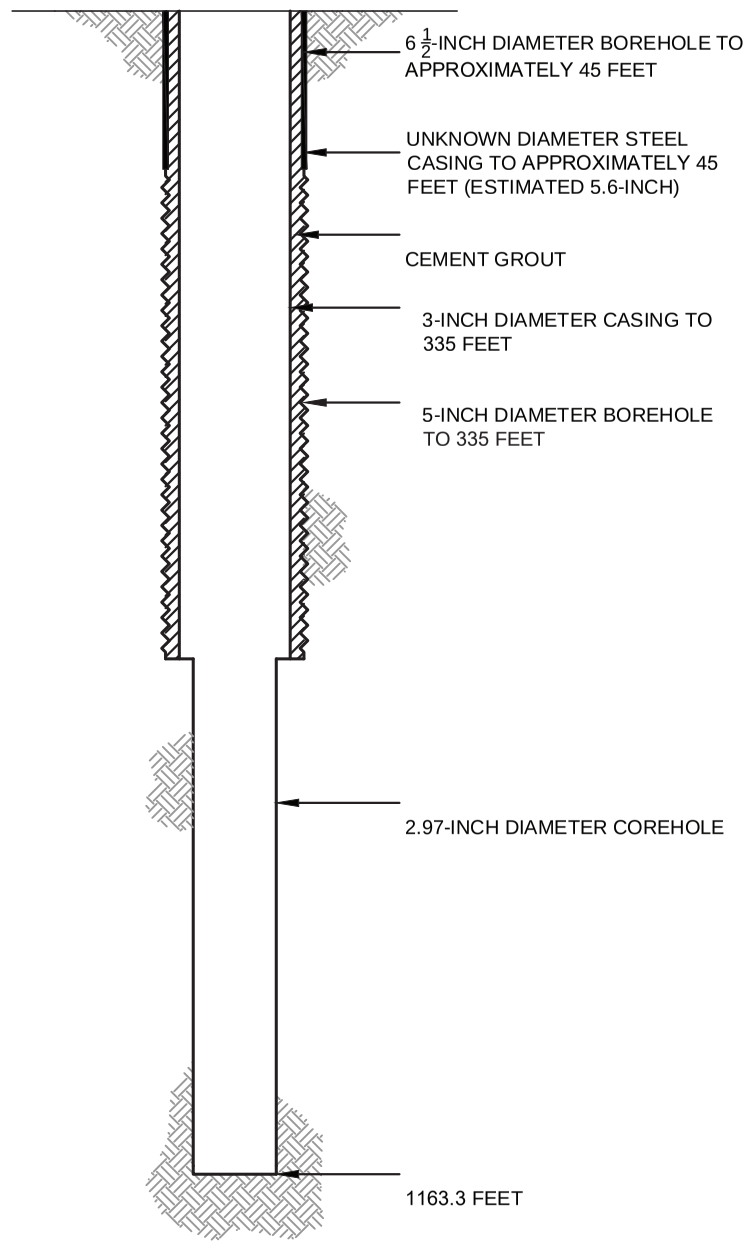

PROPOSED PLUGGING AND ABANDONMENT COREHOLE 267S

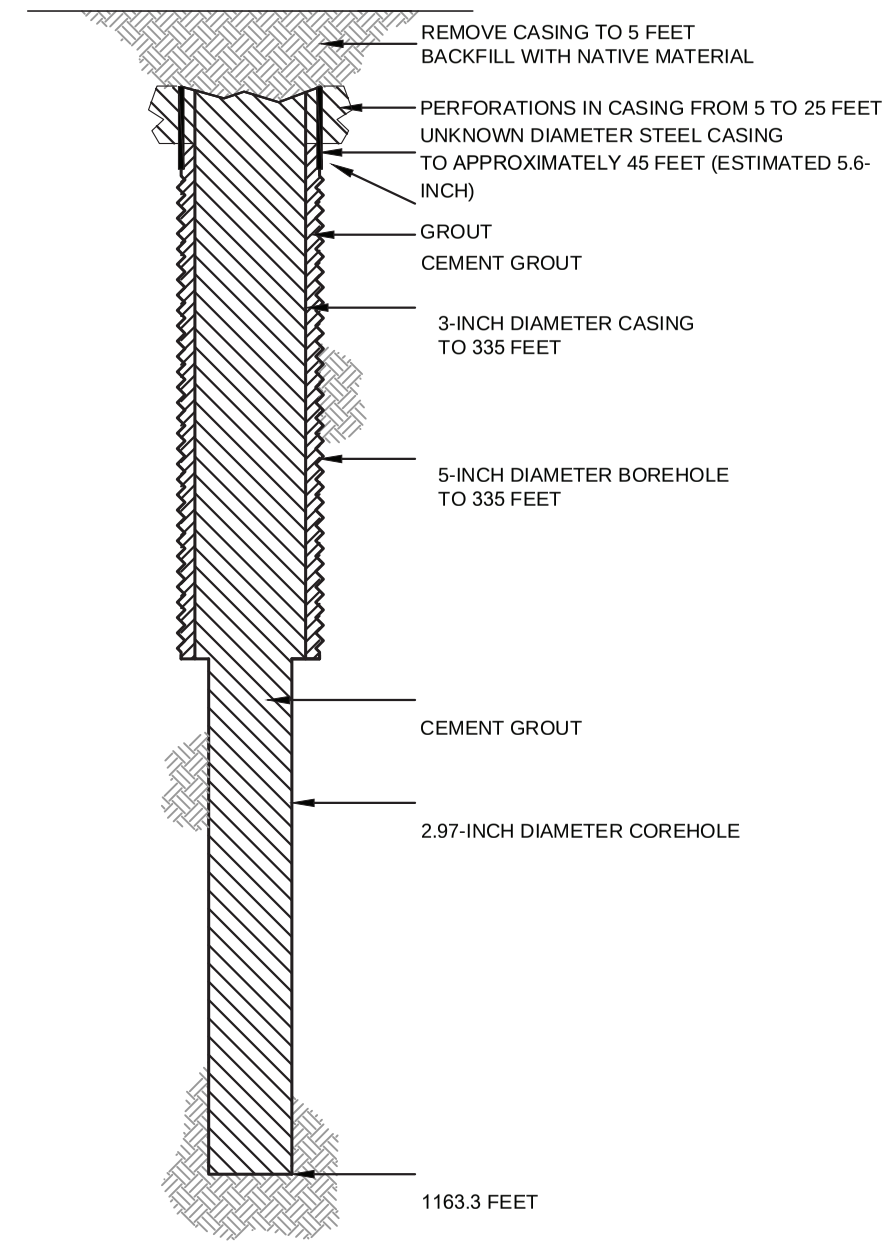

HALEY ALDRICH

FLORENCE COPPER, INC.
FLORENCE, ARIZONA

COREHOLE 267S DIAGRAM

FLORENCE COPPER INC.

NOT TO SCALE
SEPTEMBER 2019

FIGURE 1

MOBINI, GITA Printed: 4/21/2017 12:00 PM Layout: ABANDON (2)
G:\PROJECTS\CURIS RESOURCES\38706-CURIS FEASIBILITY\DRAWINGS\EPA\WELL ABANDON\415S_ABANDON.DWG

OMB No. 2040-0042 Approval Expires 4/30/2022

United States Environmental Protection Agency

WELL REWORK RECORD, PLUGGING AND ABANDONMENT PLAN, OR PLUGGING AND ABANDONMENT AFFIDAVIT

Name and Address, Phone Number and/or Email of Permittee

Florence Copper Project
1575 W Hunt Hwy,
Florence, AZ 85132

Permit or EPA ID Number	API Number	Full Well Name
R9UIC-AZ3-FY11-1		268MF

State	County
Arizona	Pinal

Locate well in two directions from nearest lines of quarter section and drilling unit

Latitude 33.0491427

Longitude -111.4260768

Surface Location

SW **1/4 of** SE **1/4 of Section** 28 **Township** 4S **Range** 9E

_____ **ft. from (N/S)** _____ **Line of quarter section**

_____ **ft. from (E/W)** _____ **Line of quarter section.**

Well Class	Timing of Action (pick one)	Type of Action (pick one)
☐ Class I ☐ Class II ☑ Class III ☐ Class V	☑ Notice Prior to Work Date Expected to Commence March 2021 ☐ Report After Work Date Work Ended	☐ Well Rework ☑ Plugging and Abandonment ☐ Conversion to a Non-Injection Well

Provide a narrative description of the work planned to be performed, or that was performed. Use additional pages as necessary. See instructions.

A workover rig capable of performing the required abandonment operations at the required depths will be moved in and set up over the core hole. The core hole will be inspected to determine the depth to which the hole remains open and if any obstructions are present in the core hole; the presence and condition of any existing collar will also be documented. If necessary, the core hole will be cleaned out to a depth of at least 100 feet below the bedrock-LBFU contact to enable placement of cement seals.

If collar is present, an attempt will be made to remove it. If removal of the collar is not feasible, it will be left in the hole and perforated as needed to allow an annular seal to be placed to a depth of at least 25 feet bgs. In areas of agricultural use, the surface casing will be cut at least 5 feet bgs and removed.

If the collar cannot be removed, it will be perforated from at least 20 feet below the bedrock-LBFU contact to at least 20 feet above the contact; from at least 20 feet below the base of the MFGU to at least 20 feet above the top of the MFGU; and from at least 25 feet bgs to 5 feet bgs.

A tremie pipe will be used to place Type V cement in the open core hole from the bottom of the core hole to the top of the core hole. Cement retainers, as described above, will be used to force cement grout into the annulus and behind perforated intervals, as necessary.

If the hole has been obstructed, as much cement as possible will be placed from 100 feet below the LBFU-bedrock contact to the top of the core hole.

The volume of Type V cement will be recorded and will not be less than the estimated volume of material required to fill each interval. All cement grout will consist of Type V cement, or equivalent approved in accordance with the UIC Permit.

Certification

I certify under the penalty of law that I have personally examined and am familiar with the information submitted in this document and all attachments and that, based on my inquiry of those individuals immediately responsible for obtaining the information, I believe that the information is true, accurate, and complete. I am aware that there are significant penalties for submitting false information, including the possibliity of fine and imprisonment. (Ref. 40 CFR § 144.32)

Name and Official Title *(Please type or print)*	Signature	Date Signed
Dan Johnson, VP - General Manager		10/3/2019

INSTRUCTIONS FOR FORM 7520-19

This form replaces forms 7520-12 and 7520-14. Use this form only when work is planned or has occurred that affects the well's construction or operation as an injection well, including work on the casing, tubing or packer (or for shallow Class V wells, the subsurface fluid emplacement network). Use one form per injection well. While reports or other information developed by contractors or service companies may be attached, this form must be signed by a responsible entity as described at 40 CFR 144.32. Note: operators closing Class V wells should use Form 7520-17.

NAME, ADDRESS, PHONE AND/OR EMAIL OF PERMITTEE: Enter the name and street address, city/town, state, and ZIP code of the permittee. Also provide an email address (if available) and/or a phone number.

PERMIT OR EPA ID NUMBER: Enter the well identification number or permit number assigned to the well by the EPA or the permitting authority.

API NUMBER: Enter the number assigned by the local jurisdiction (usually a State Oil and Gas Agency) using the American Petroleum Institute standard numbering system.

FULL WELL NAME: Enter the full name of the well or project.

Enter the **STATE** and **COUNTY** where the well is located. For States that do not have counties, use the name of that State's equivalent jurisdiction at a more local level.

WELL LOCATION: Fill in the complete township, range, and section to the nearest quarter-quarter section. A township is north or south of the baseline, and a range is east or west of the principal meridian (e.g., T12N, R34W). Also include the distance, in feet, from the nearest north or south line and nearest east or west line of the quarter-section. Also, enter the **latitude** and **longitude** of the well in decimal degrees, to five or six places if possible; be sure to include a negative sign for the longitude of a well in the Western Hemisphere and a negative sign for the latitude of a well in the Southern Hemisphere.

Enter the **WELL CLASS,** i.e., the class of injection well as defined in 40 CFR 144.6.

TIMING OF THE ACTION: Check ***Notice prior to work*** if the activity has not yet occurred (i.e., is planned). Check ***Report after work*** if the activity described has already occurred. As appropriate, include the date the activity is expected to start or the date the activity was completed. (Note this may not be available, e.g., for a plugging plan submitted with a permit application.)

TYPE OF ACTION: Check the appropriate box to describe the kind of activity being reported. Check ***Well Rework*** for work that was/will be performed on the well after it has already been in operation as an injection well. Check ***Plugging and Abandonment*** to report on plans for or descriptions of final closure/plugging after use as an injection well. Check ***Conversion to a Non-Injection Well*** if the well is to be converted to something other than an injection well.

Provide a **NARRATIVE DESCRIPTION** of the work planned to be performed, or that was performed. The narrative should include a description of the main procedures planned or that occurred during the work activity. A service company report, daily report, or similar document may be attached if it includes all the requested information and is clear and legible.

For well reworks, include the following information: The reason for the well rework; depths of activity; type of activity; changes to injection well configuration, well casing, or cement behind casing; any plug added to the well and its depth; any newly drilled interval and its depth; method(s) to demonstrate that the well has mechanical integrity (as applicable); and any deviations from the approved rework plan (as applicable).

For a well plugging plan, include the following information: Reason for the well plugging; number of plugs placed, and their depths; materials used as plugs (e.g., cast iron bridge plug, cement, cement retainer); method to set plugs; and wait-on-cement times, if any. Also provide one or more cost estimates from an independent firm in the business of plugging and abandoning wells to plug the well as described in the plan.

For well plugging affidavit, include the following information: Reason for the well plugging; number of plugs placed, and their depths; materials used as plugs (e.g., cast iron bridge plug, cement, cement retainer); method to set plugs; wait-on-cement times, if any; and any deviations from the approved plugging plan (if applicable).

For conversion to a non-injection well, include the following information: Depths of activity; type of activity; changes to injection well configuration, well casing, or cement behind casing; any plug added to the well and its depth; any newly drilled interval and its depth; depths of new perforations; and method(s) to demonstrate that the well has mechanical integrity (as applicable).

For all of the above activities, include a well sketch depicting the work, results of well tests/logging performed, service company tickets, and any other available information demonstrating how the work was/is to be performed. Also, specify whether depths are below ground surface, relative to Kelly bushing, etc.

CERTIFICATION: This form must be signed and dated by either: a responsible corporate officer for a corporation, by a general partner for a partnership, by the proprietor of a sole proprietorship, or by a principal executive or ranking elected official for a public agency.

PAPERWORK REDUCTION ACT NOTICE: The public reporting and recordkeeping burden for this collection of information is estimated to average between 6.0 and 7.9 hours per response, depending on the injection well class. Burden means the total time, effort, or financial resource expended by persons to generate, maintain, retain, or disclose or provide information to or for a Federal Agency. This includes the time needed to review instructions; develop, acquire, install, and utilize technology and systems for the purposes of collecting, validating, and verifying information, processing and maintaining information, and disclosing and providing information; adjust the existing ways to comply with any previously applicable instructions and requirements; train personnel to be able to respond to the collection of information; search data sources; complete and review the collection of information; and, transmit or otherwise disclose the information. An agency may not conduct or sponsor, and a person is not required to respond to, a collection of information unless it displays a currently valid OMB control number. Send comments on the Agency's need for this information, the accuracy of the provided burden estimates, and any suggested methods for minimizing respondent burden, including the use of automated collection techniques to Director, Collection Strategies Division, U.S. Environmental Protection Agency (2822), 1200 Pennsylvania Ave., NW., Washington, D.C. 20460. Include the OMB control number in any correspondence. Do not send the completed forms to this address.

AS-BUILT COREHOLE 268MF

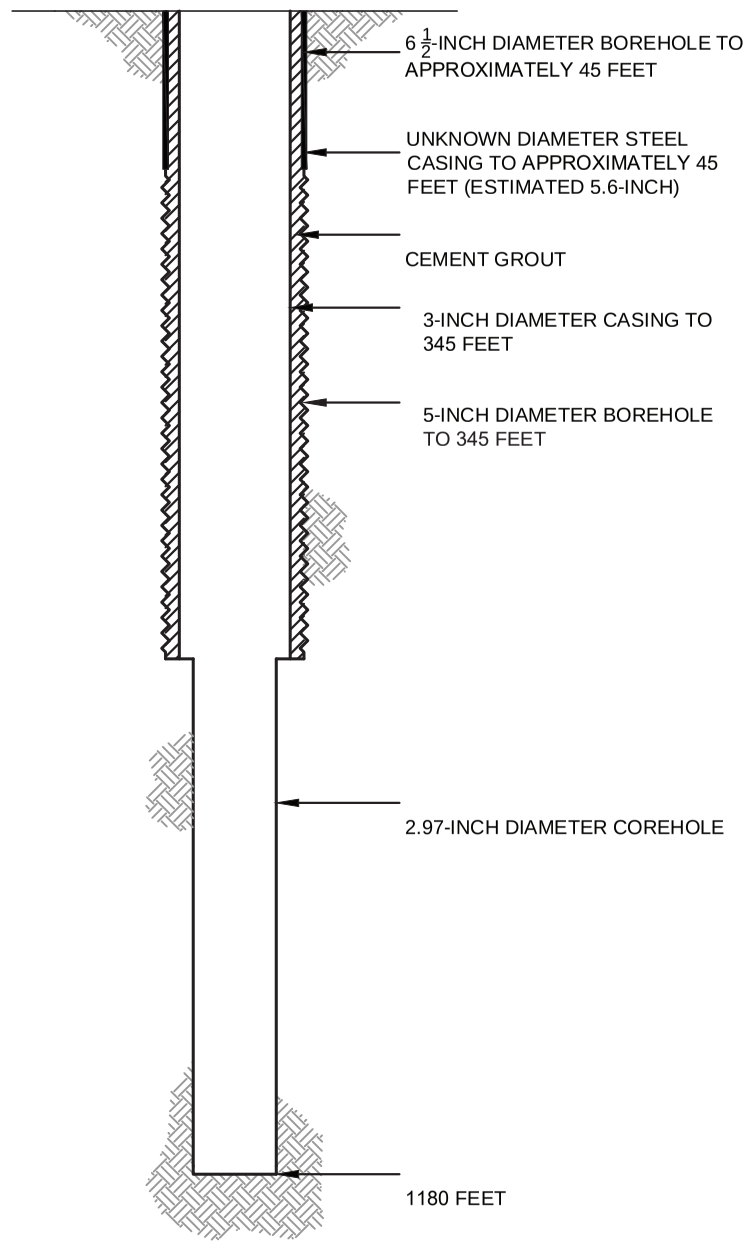

PROPOSED PLUGGING AND ABANDONMENT COREHOLE 268MF

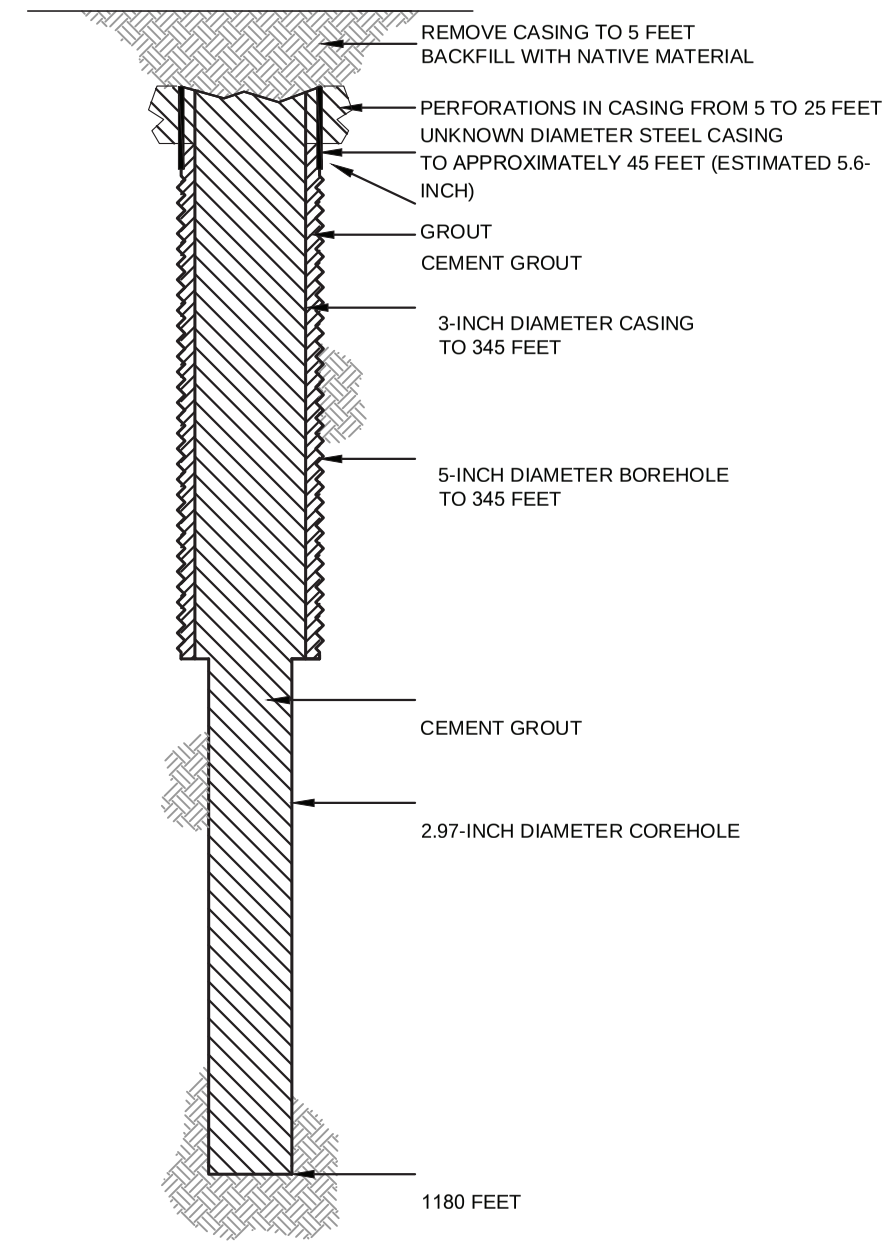

HALEY ALDRICH

FLORENCE COPPER, INC.
FLORENCE, ARIZONA

COREHOLE 268MF DIAGRAM

FLORENCE COPPER INC.

NOT TO SCALE
SEPTEMBER 2019

FIGURE 1

MOBINI, GITA Printed: 4/21/2017 12:00 PM Layout: ABANDON (2)
G:\PROJECTS\CURIS RESOURCES\38706-CURIS FEASIBILITY\DRAWINGS\EPA\WELL ABANDON\415S_ABANDON.DWG

OMB No. 2040-0042 Approval Expires 4/30/2022

United States Environmental Protection Agency

WELL REWORK RECORD, PLUGGING AND ABANDONMENT PLAN, OR PLUGGING AND ABANDONMENT AFFIDAVIT

Name and Address, Phone Number and/or Email of Permittee

Florence Copper Project
1575 W Hunt Hwy,
Florence, AZ 85132

Permit or EPA ID Number	API Number	Full Well Name
R9UIC-AZ3-FY11-1		269S

State	County
Arizona	Pinal

Locate well in two directions from nearest lines of quarter section and drilling unit

Latitude 33.04973344

Longitude -111.4232342

Surface Location

NE **1/4 of** SE **1/4 of Section** 28 **Township** 4S **Range** 9E

_____ **ft. from (N/S)** _____ **Line of quarter section**

_____ **ft. from (E/W)** _____ **Line of quarter section.**

Well Class	Timing of Action (pick one)	Type of Action (pick one)
☐ Class I ☐ Class II ☑ Class III ☐ Class V	☑ Notice Prior to Work Date Expected to Commence March 2021 ☐ Report After Work Date Work Ended	☐ Well Rework ☑ Plugging and Abandonment ☐ Conversion to a Non-Injection Well

Provide a narrative description of the work planned to be performed, or that was performed. Use additional pages as necessary. See instructions.

A workover rig capable of performing the required abandonment operations at the required depths will be moved in and set up over the core hole. The core hole will be inspected to determine the depth to which the hole remains open and if any obstructions are present in the core hole; the presence and condition of any existing collar will also be documented. If necessary, the core hole will be cleaned out to a depth of at least 100 feet below the bedrock-LBFU contact to enable placement of cement seals.

If collar is present, an attempt will be made to remove it. If removal of the collar is not feasible, it will be left in the hole and perforated as needed to allow an annular seal to be placed to a depth of at least 25 feet bgs. In areas of agricultural use, the surface casing will be cut at least 5 feet bgs and removed.

If the collar cannot be removed, it will be perforated from at least 20 feet below the bedrock-LBFU contact to at least 20 feet above the contact; from at least 20 feet below the base of the MFGU to at least 20 feet above the top of the MFGU; and from at least 25 feet bgs to 5 feet bgs.

A tremie pipe will be used to place Type V cement in the open core hole from the bottom of the core hole to the top of the core hole. Cement retainers, as described above, will be used to force cement grout into the annulus and behind perforated intervals, as necessary.

If the hole has been obstructed, as much cement as possible will be placed from 100 feet below the LBFU-bedrock contact to the top of the core hole.

The volume of Type V cement will be recorded and will not be less than the estimated volume of material required to fill each interval. All cement grout will consist of Type V cement, or equivalent approved in accordance with the UIC Permit.

Certification

I certify under the penalty of law that I have personally examined and am familiar with the information submitted in this document and all attachments and that, based on my inquiry of those individuals immediately responsible for obtaining the information, I believe that the information is true, accurate, and complete. I am aware that there are significant penalties for submitting false information, including the possibliity of fine and imprisonment. (Ref. 40 CFR § 144.32)

Name and Official Title *(Please type or print)*	Signature	Date Signed
Dan Johnson, VP - General Manager		10/3/2019

INSTRUCTIONS FOR FORM 7520-19

This form replaces forms 7520-12 and 7520-14. Use this form only when work is planned or has occurred that affects the well's construction or operation as an injection well, including work on the casing, tubing or packer (or for shallow Class V wells, the subsurface fluid emplacement network). Use one form per injection well. While reports or other information developed by contractors or service companies may be attached, this form must be signed by a responsible entity as described at 40 CFR 144.32. Note: operators closing Class V wells should use Form 7520-17.

NAME, ADDRESS, PHONE AND/OR EMAIL OF PERMITTEE: Enter the name and street address, city/town, state, and ZIP code of the permittee. Also provide an email address (if available) and/or a phone number.

PERMIT OR EPA ID NUMBER: Enter the well identification number or permit number assigned to the well by the EPA or the permitting authority.

API NUMBER: Enter the number assigned by the local jurisdiction (usually a State Oil and Gas Agency) using the American Petroleum Institute standard numbering system.

FULL WELL NAME: Enter the full name of the well or project.

Enter the **STATE** and **COUNTY** where the well is located. For States that do not have counties, use the name of that State's equivalent jurisdiction at a more local level.

WELL LOCATION: Fill in the complete township, range, and section to the nearest quarter-quarter section. A township is north or south of the baseline, and a range is east or west of the principal meridian (e.g., T12N, R34W). Also include the distance, in feet, from the nearest north or south line and nearest east or west line of the quarter-section. Also, enter the **latitude** and **longitude** of the well in decimal degrees, to five or six places if possible; be sure to include a negative sign for the longitude of a well in the Western Hemisphere and a negative sign for the latitude of a well in the Southern Hemisphere.

Enter the **WELL CLASS,** i.e., the class of injection well as defined in 40 CFR 144.6.

TIMING OF THE ACTION: Check ***Notice prior to work*** if the activity has not yet occurred (i.e., is planned). Check ***Report after work*** if the activity described has already occurred. As appropriate, include the date the activity is expected to start or the date the activity was completed. (Note this may not be available, e.g., for a plugging plan submitted with a permit application.)

TYPE OF ACTION: Check the appropriate box to describe the kind of activity being reported. Check ***Well Rework*** for work that was/will be performed on the well after it has already been in operation as an injection well. Check ***Plugging and Abandonment*** to report on plans for or descriptions of final closure/plugging after use as an injection well. Check ***Conversion to a Non-Injection Well*** if the well is to be converted to something other than an injection well.

Provide a **NARRATIVE DESCRIPTION** of the work planned to be performed, or that was performed. The narrative should include a description of the main procedures planned or that occurred during the work activity. A service company report, daily report, or similar document may be attached if it includes all the requested information and is clear and legible.

For well reworks, include the following information: The reason for the well rework; depths of activity; type of activity; changes to injection well configuration, well casing, or cement behind casing; any plug added to the well and its depth; any newly drilled interval and its depth; method(s) to demonstrate that the well has mechanical integrity (as applicable); and any deviations from the approved rework plan (as applicable).

For a well plugging plan, include the following information: Reason for the well plugging; number of plugs placed, and their depths; materials used as plugs (e.g., cast iron bridge plug, cement, cement retainer); method to set plugs; and wait-on-cement times, if any. Also provide one or more cost estimates from an independent firm in the business of plugging and abandoning wells to plug the well as described in the plan.

For well plugging affidavit, include the following information: Reason for the well plugging; number of plugs placed, and their depths; materials used as plugs (e.g., cast iron bridge plug, cement, cement retainer); method to set plugs; wait-on-cement times, if any; and any deviations from the approved plugging plan (if applicable).

For conversion to a non-injection well, include the following information: Depths of activity; type of activity; changes to injection well configuration, well casing, or cement behind casing; any plug added to the well and its depth; any newly drilled interval and its depth; depths of new perforations; and method(s) to demonstrate that the well has mechanical integrity (as applicable).

For all of the above activities, include a well sketch depicting the work, results of well tests/logging performed, service company tickets, and any other available information demonstrating how the work was/is to be performed. Also, specify whether depths are below ground surface, relative to Kelly bushing, etc.

CERTIFICATION: This form must be signed and dated by either: a responsible corporate officer for a corporation, by a general partner for a partnership, by the proprietor of a sole proprietorship, or by a principal executive or ranking elected official for a public agency.

PAPERWORK REDUCTION ACT NOTICE: The public reporting and recordkeeping burden for this collection of information is estimated to average between 6.0 and 7.9 hours per response, depending on the injection well class. Burden means the total time, effort, or financial resource expended by persons to generate, maintain, retain, or disclose or provide information to or for a Federal Agency. This includes the time needed to review instructions; develop, acquire, install, and utilize technology and systems for the purposes of collecting, validating, and verifying information, processing and maintaining information, and disclosing and providing information; adjust the existing ways to comply with any previously applicable instructions and requirements; train personnel to be able to respond to the collection of information; search data sources; complete and review the collection of information; and, transmit or otherwise disclose the information. An agency may not conduct or sponsor, and a person is not required to respond to, a collection of information unless it displays a currently valid OMB control number. Send comments on the Agency's need for this information, the accuracy of the provided burden estimates, and any suggested methods for minimizing respondent burden, including the use of automated collection techniques to Director, Collection Strategies Division, U.S. Environmental Protection Agency (2822), 1200 Pennsylvania Ave., NW., Washington, D.C. 20460. Include the OMB control number in any correspondence. Do not send the completed forms to this address.

AS-BUILT COREHOLE 269S

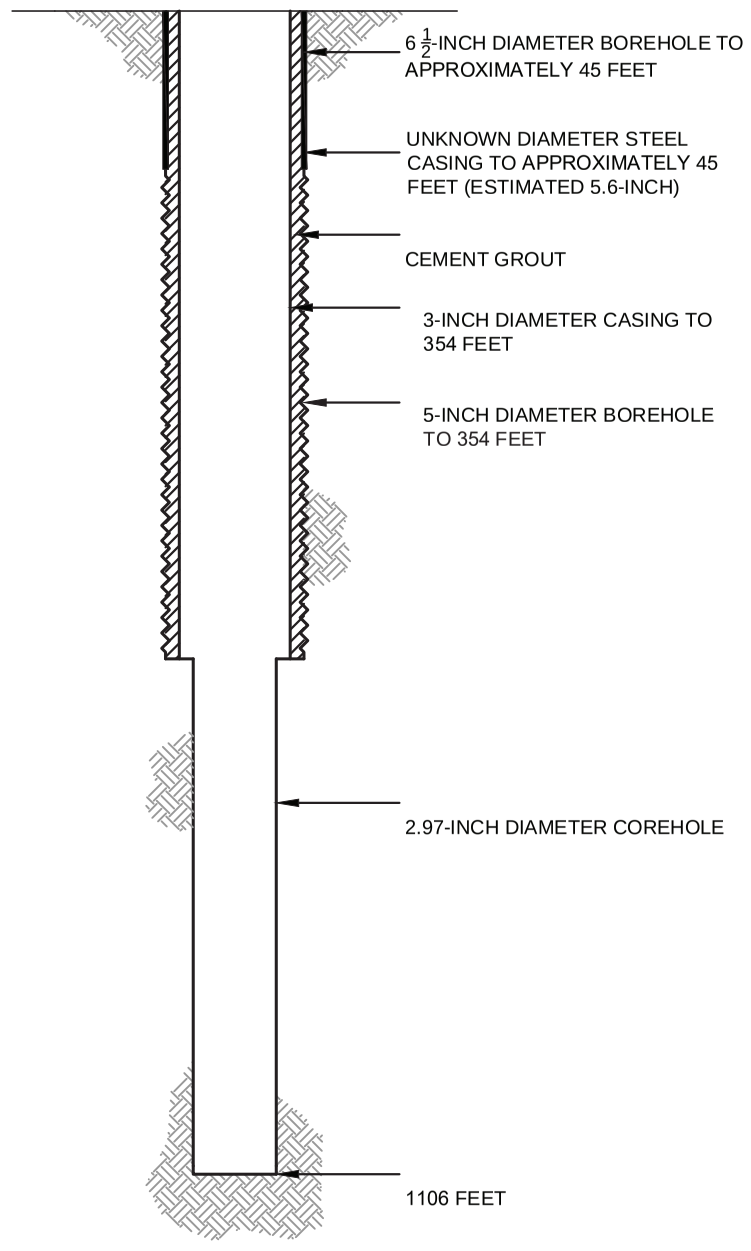

PROPOSED PLUGGING AND ABANDONMENT COREHOLE 269S

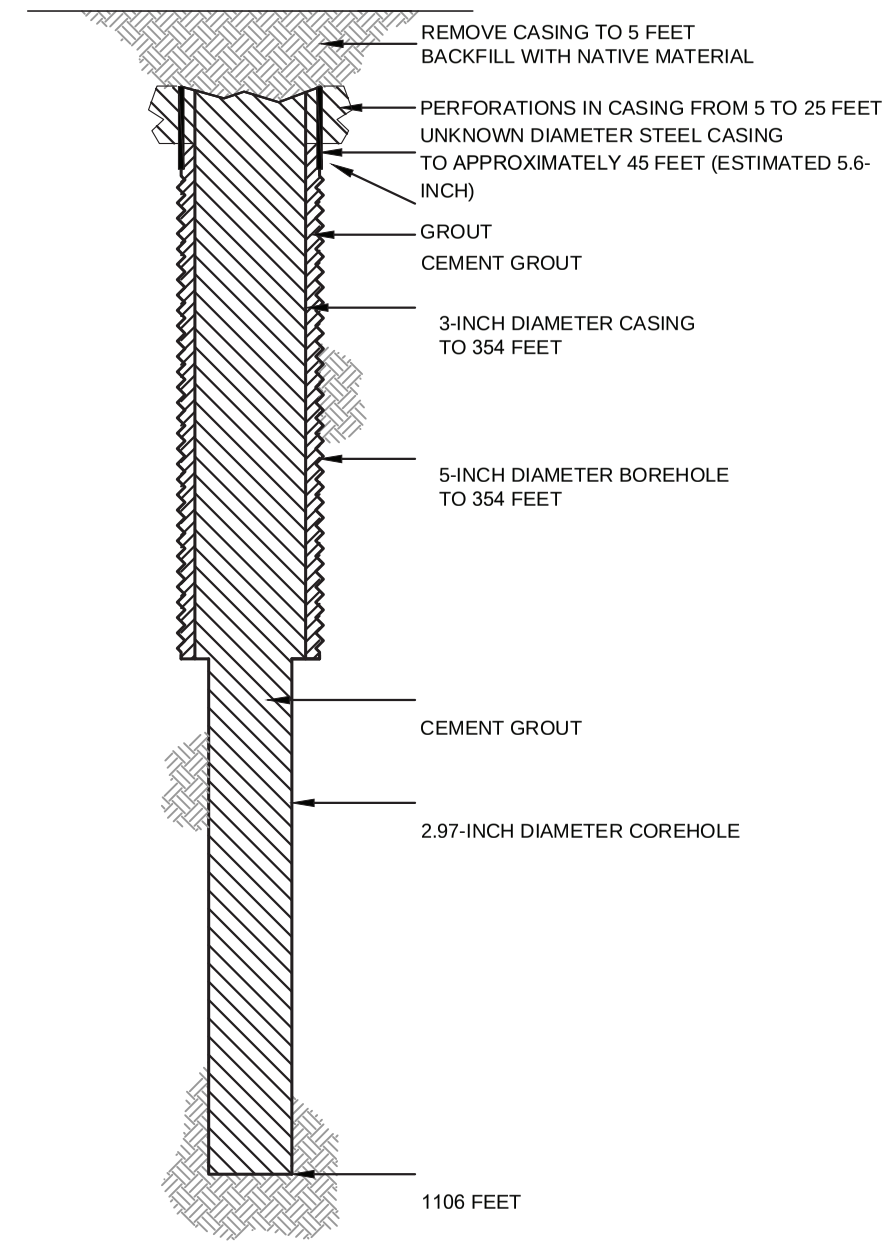

HALEY ALDRICH

FLORENCE COPPER, INC.
FLORENCE, ARIZONA

COREHOLE 269S DIAGRAM

FLORENCE COPPER INC.

NOT TO SCALE
SEPTEMBER 2019

FIGURE 1

MOBINI, GITA Printed: 4/21/2017 12:00 PM Layout: ABANDON (2)
G:\PROJECTS\CURIS RESOURCES\38706-CURIS FEASIBILITY\DRAWINGS\EPA\WELL ABANDON\415S_ABANDON.DWG

OMB No. 2040-0042 Approval Expires 4/30/2022

United States Environmental Protection Agency

WELL REWORK RECORD, PLUGGING AND ABANDONMENT PLAN, OR PLUGGING AND ABANDONMENT AFFIDAVIT

Name and Address, Phone Number and/or Email of Permittee

Florence Copper Project
1575 W Hunt Hwy,
Florence, AZ 85132

Permit or EPA ID Number	API Number	Full Well Name
R9UIC-AZ3-FY11-1		279S

State	County
Arizona	Pinal

Locate well in two directions from nearest lines of quarter section and drilling unit

Latitude 33.05151976

Longitude -111.4277006

Surface Location

NW **1/4 of** SE **1/4 of Section** 28 **Township** 4S **Range** 9E

_____ **ft. from (N/S)** _____ **Line of quarter section**

_____ **ft. from (E/W)** _____ **Line of quarter section.**

Well Class	Timing of Action (pick one)	Type of Action (pick one)
☐ Class I ☐ Class II ☑ Class III ☐ Class V	☑ Notice Prior to Work Date Expected to Commence March 2021 ☐ Report After Work Date Work Ended	☐ Well Rework ☑ Plugging and Abandonment ☐ Conversion to a Non-Injection Well

Provide a narrative description of the work planned to be performed, or that was performed. Use additional pages as necessary. See instructions.

A workover rig capable of performing the required abandonment operations at the required depths will be moved in and set up over the core hole. The core hole will be inspected to determine the depth to which the hole remains open and if any obstructions are present in the core hole; the presence and condition of any existing collar will also be documented. If necessary, the core hole will be cleaned out to a depth of at least 100 feet below the bedrock-LBFU contact to enable placement of cement seals.

If collar is present, an attempt will be made to remove it. If removal of the collar is not feasible, it will be left in the hole and perforated as needed to allow an annular seal to be placed to a depth of at least 25 feet bgs. In areas of agricultural use, the surface casing will be cut at least 5 feet bgs and removed.

If the collar cannot be removed, it will be perforated from at least 20 feet below the bedrock-LBFU contact to at least 20 feet above the contact; from at least 20 feet below the base of the MFGU to at least 20 feet above the top of the MFGU; and from at least 25 feet bgs to 5 feet bgs.

A tremie pipe will be used to place Type V cement in the open core hole from the bottom of the core hole to the top of the core hole. Cement retainers, as described above, will be used to force cement grout into the annulus and behind perforated intervals, as necessary.

If the hole has been obstructed, as much cement as possible will be placed from 100 feet below the LBFU-bedrock contact to the top of the core hole.

The volume of Type V cement will be recorded and will not be less than the estimated volume of material required to fill each interval. All cement grout will consist of Type V cement, or equivalent approved in accordance with the UIC Permit.

Certification

I certify under the penalty of law that I have personally examined and am familiar with the information submitted in this document and all attachments and that, based on my inquiry of those individuals immediately responsible for obtaining the information, I believe that the information is true, accurate, and complete. I am aware that there are significant penalties for submitting false information, including the possibliity of fine and imprisonment. (Ref. 40 CFR § 144.32)

Name and Official Title *(Please type or print)*	Signature	Date Signed
Dan Johnson, VP - General Manager		10/3/2019

INSTRUCTIONS FOR FORM 7520-19

This form replaces forms 7520-12 and 7520-14. Use this form only when work is planned or has occurred that affects the well's construction or operation as an injection well, including work on the casing, tubing or packer (or for shallow Class V wells, the subsurface fluid emplacement network). Use one form per injection well. While reports or other information developed by contractors or service companies may be attached, this form must be signed by a responsible entity as described at 40 CFR 144.32. Note: operators closing Class V wells should use Form 7520-17.

NAME, ADDRESS, PHONE AND/OR EMAIL OF PERMITTEE: Enter the name and street address, city/town, state, and ZIP code of the permittee. Also provide an email address (if available) and/or a phone number.

PERMIT OR EPA ID NUMBER: Enter the well identification number or permit number assigned to the well by the EPA or the permitting authority.

API NUMBER: Enter the number assigned by the local jurisdiction (usually a State Oil and Gas Agency) using the American Petroleum Institute standard numbering system.

FULL WELL NAME: Enter the full name of the well or project.

Enter the **STATE** and **COUNTY** where the well is located. For States that do not have counties, use the name of that State's equivalent jurisdiction at a more local level.

WELL LOCATION: Fill in the complete township, range, and section to the nearest quarter-quarter section. A township is north or south of the baseline, and a range is east or west of the principal meridian (e.g., T12N, R34W). Also include the distance, in feet, from the nearest north or south line and nearest east or west line of the quarter-section. Also, enter the **latitude** and **longitude** of the well in decimal degrees, to five or six places if possible; be sure to include a negative sign for the longitude of a well in the Western Hemisphere and a negative sign for the latitude of a well in the Southern Hemisphere.

Enter the **WELL CLASS,** i.e., the class of injection well as defined in 40 CFR 144.6.

TIMING OF THE ACTION: Check ***Notice prior to work*** if the activity has not yet occurred (i.e., is planned). Check ***Report after work*** if the activity described has already occurred. As appropriate, include the date the activity is expected to start or the date the activity was completed. (Note this may not be available, e.g., for a plugging plan submitted with a permit application.)

TYPE OF ACTION: Check the appropriate box to describe the kind of activity being reported. Check ***Well Rework*** for work that was/will be performed on the well after it has already been in operation as an injection well. Check ***Plugging and Abandonment*** to report on plans for or descriptions of final closure/plugging after use as an injection well. Check ***Conversion to a Non-Injection Well*** if the well is to be converted to something other than an injection well.

Provide a **NARRATIVE DESCRIPTION** of the work planned to be performed, or that was performed. The narrative should include a description of the main procedures planned or that occurred during the work activity. A service company report, daily report, or similar document may be attached if it includes all the requested information and is clear and legible.

For well reworks, include the following information: The reason for the well rework; depths of activity; type of activity; changes to injection well configuration, well casing, or cement behind casing; any plug added to the well and its depth; any newly drilled interval and its depth; method(s) to demonstrate that the well has mechanical integrity (as applicable); and any deviations from the approved rework plan (as applicable).

For a well plugging plan, include the following information: Reason for the well plugging; number of plugs placed, and their depths; materials used as plugs (e.g., cast iron bridge plug, cement, cement retainer); method to set plugs; and wait-on-cement times, if any. Also provide one or more cost estimates from an independent firm in the business of plugging and abandoning wells to plug the well as described in the plan.

For well plugging affidavit, include the following information: Reason for the well plugging; number of plugs placed, and their depths; materials used as plugs (e.g., cast iron bridge plug, cement, cement retainer); method to set plugs; wait-on-cement times, if any; and any deviations from the approved plugging plan (if applicable).

For conversion to a non-injection well, include the following information: Depths of activity; type of activity; changes to injection well configuration, well casing, or cement behind casing; any plug added to the well and its depth; any newly drilled interval and its depth; depths of new perforations; and method(s) to demonstrate that the well has mechanical integrity (as applicable).

For all of the above activities, include a well sketch depicting the work, results of well tests/logging performed, service company tickets, and any other available information demonstrating how the work was/is to be performed. Also, specify whether depths are below ground surface, relative to Kelly bushing, etc.

CERTIFICATION: This form must be signed and dated by either: a responsible corporate officer for a corporation, by a general partner for a partnership, by the proprietor of a sole proprietorship, or by a principal executive or ranking elected official for a public agency.

PAPERWORK REDUCTION ACT NOTICE: The public reporting and recordkeeping burden for this collection of information is estimated to average between 6.0 and 7.9 hours per response, depending on the injection well class. Burden means the total time, effort, or financial resource expended by persons to generate, maintain, retain, or disclose or provide information to or for a Federal Agency. This includes the time needed to review instructions; develop, acquire, install, and utilize technology and systems for the purposes of collecting, validating, and verifying information, processing and maintaining information, and disclosing and providing information; adjust the existing ways to comply with any previously applicable instructions and requirements; train personnel to be able to respond to the collection of information; search data sources; complete and review the collection of information; and, transmit or otherwise disclose the information. An agency may not conduct or sponsor, and a person is not required to respond to, a collection of information unless it displays a currently valid OMB control number. Send comments on the Agency's need for this information, the accuracy of the provided burden estimates, and any suggested methods for minimizing respondent burden, including the use of automated collection techniques to Director, Collection Strategies Division, U.S. Environmental Protection Agency (2822), 1200 Pennsylvania Ave., NW., Washington, D.C. 20460. Include the OMB control number in any correspondence. Do not send the completed forms to this address.

AS-BUILT COREHOLE 279S

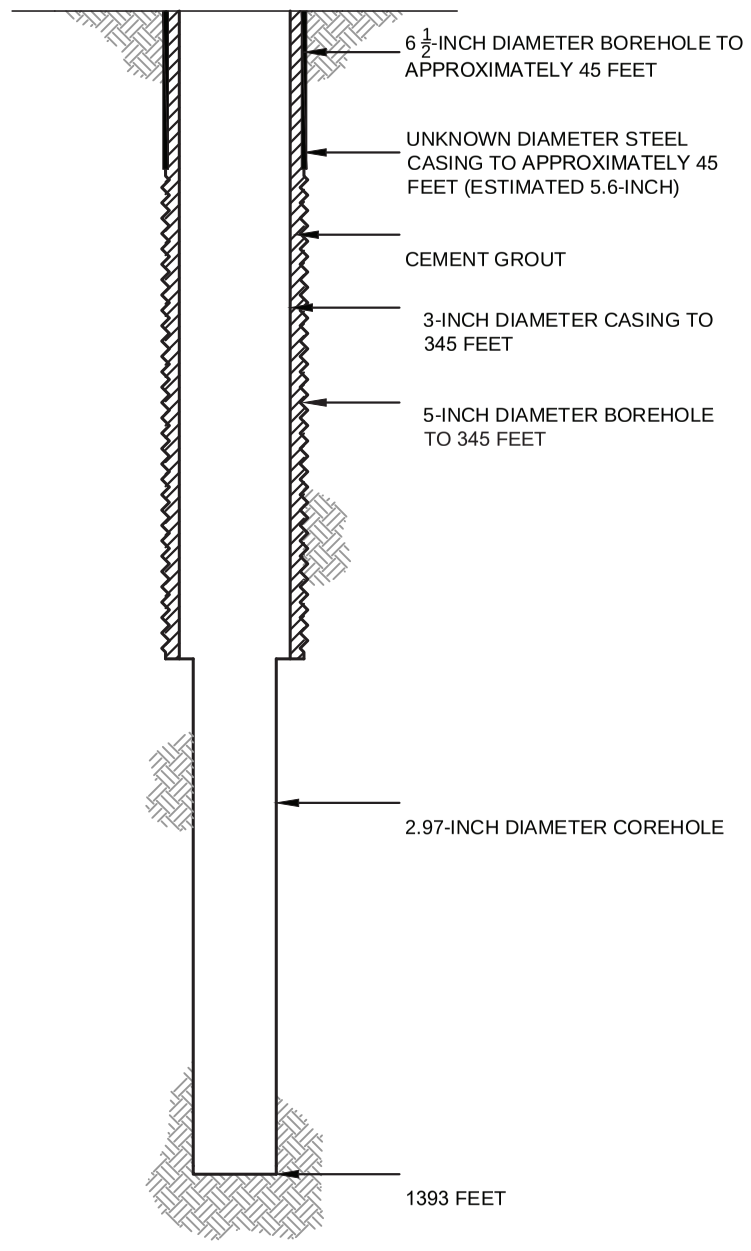

PROPOSED PLUGGING AND ABANDONMENT COREHOLE 279S

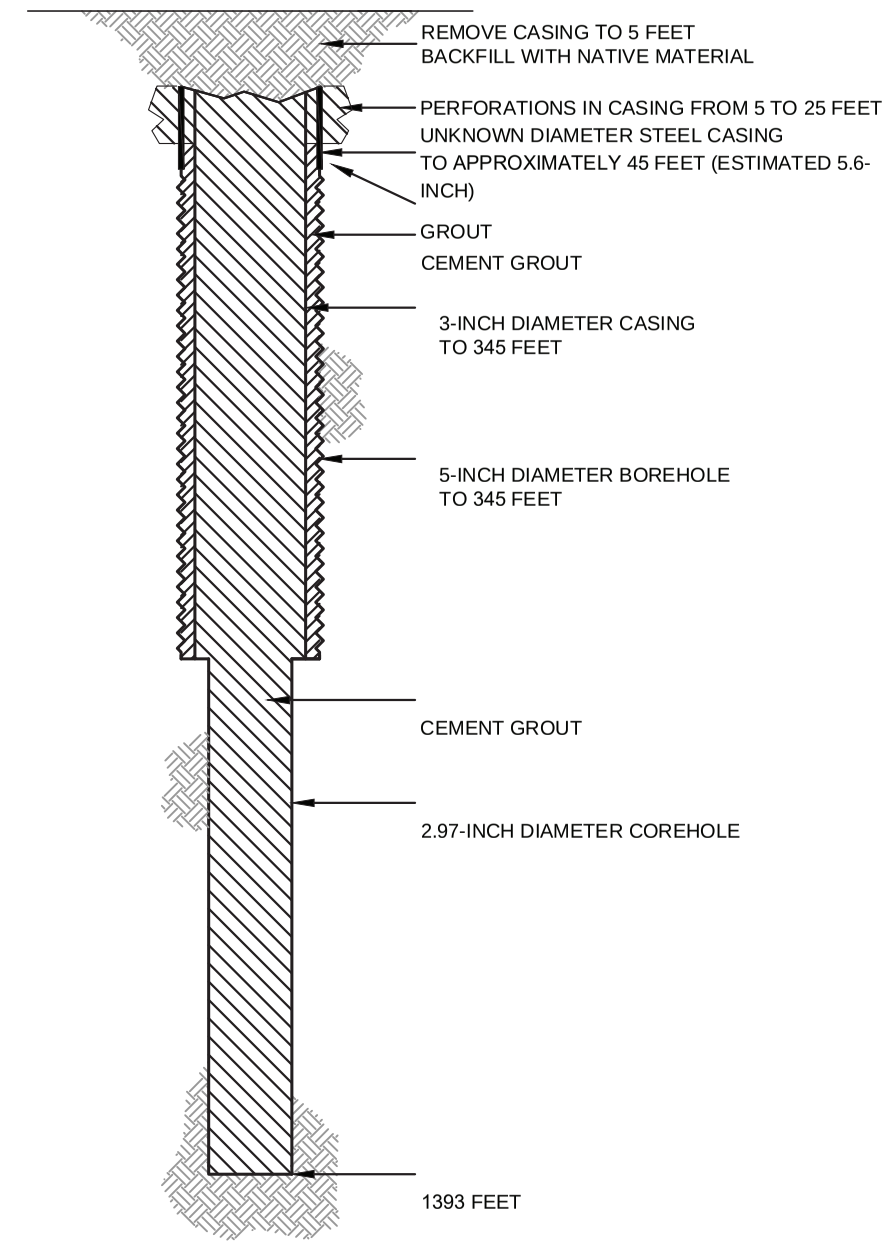

HALEY ALDRICH

FLORENCE COPPER, INC.
FLORENCE, ARIZONA

COREHOLE 279S DIAGRAM

FLORENCE COPPER INC.

NOT TO SCALE
SEPTEMBER 2019

FIGURE 1

MOBINI, GITA Printed: 4/21/2017 12:00 PM Layout: ABANDON (2)
G:\PROJECTS\CURIS RESOURCES\38706-CURIS FEASIBILITY\DRAWINGS\EPA\WELL ABANDON\415S_ABANDON.DWG

OMB No. 2040-0042 Approval Expires 4/30/2022

United States Environmental Protection Agency

WELL REWORK RECORD, PLUGGING AND ABANDONMENT PLAN, OR PLUGGING AND ABANDONMENT AFFIDAVIT

Name and Address, Phone Number and/or Email of Permittee

Florence Copper Project
1575 W Hunt Hwy,
Florence, AZ 85132

Permit or EPA ID Number	API Number	Full Well Name
R9UIC-AZ3-FY11-1		280S

State	County
Arizona	Pinal

Locate well in two directions from nearest lines of quarter section and drilling unit

Surface Location

NW 1/4 of SE 1/4 of Section 28 Township 4S Range 9E

Latitude 33.05152735

Longitude -111.4285155

_____ ft. from (N/S) _____ Line of quarter section

_____ ft. from (E/W) _____ Line of quarter section.

Well Class	Timing of Action (pick one)	Type of Action (pick one)
☐ Class I ☐ Class II ☑ Class III ☐ Class V	☑ Notice Prior to Work Date Expected to Commence March 2021 ☐ Report After Work Date Work Ended	☐ Well Rework ☑ Plugging and Abandonment ☐ Conversion to a Non-Injection Well

Provide a narrative description of the work planned to be performed, or that was performed. Use additional pages as necessary. See instructions.

A workover rig capable of performing the required abandonment operations at the required depths will be moved in and set up over the core hole. The core hole will be inspected to determine the depth to which the hole remains open and if any obstructions are present in the core hole; the presence and condition of any existing collar will also be documented. If necessary, the core hole will be cleaned out to a depth of at least 100 feet below the bedrock-LBFU contact to enable placement of cement seals.

If collar is present, an attempt will be made to remove it. If removal of the collar is not feasible, it will be left in the hole and perforated as needed to allow an annular seal to be placed to a depth of at least 25 feet bgs. In areas of agricultural use, the surface casing will be cut at least 5 feet bgs and removed.

If the collar cannot be removed, it will be perforated from at least 20 feet below the bedrock-LBFU contact to at least 20 feet above the contact; from at least 20 feet below the base of the MFGU to at least 20 feet above the top of the MFGU; and from at least 25 feet bgs to 5 feet bgs.

A tremie pipe will be used to place Type V cement in the open core hole from the bottom of the core hole to the top of the core hole. Cement retainers, as described above, will be used to force cement grout into the annulus and behind perforated intervals, as necessary.

If the hole has been obstructed, as much cement as possible will be placed from 100 feet below the LBFU-bedrock contact to the top of the core hole.

The volume of Type V cement will be recorded and will not be less than the estimated volume of material required to fill each interval. All cement grout will consist of Type V cement, or equivalent approved in accordance with the UIC Permit.

Certification

I certify under the penalty of law that I have personally examined and am familiar with the information submitted in this document and all attachments and that, based on my inquiry of those individuals immediately responsible for obtaining the information, I believe that the information is true, accurate, and complete. I am aware that there are significant penalties for submitting false information, including the possibliity of fine and imprisonment. (Ref. 40 CFR § 144.32)

Name and Official Title *(Please type or print)*	Signature	Date Signed
Dan Johnson, VP - General Manager		10/3/2019

INSTRUCTIONS FOR FORM 7520-19

This form replaces forms 7520-12 and 7520-14. Use this form only when work is planned or has occurred that affects the well's construction or operation as an injection well, including work on the casing, tubing or packer (or for shallow Class V wells, the subsurface fluid emplacement network). Use one form per injection well. While reports or other information developed by contractors or service companies may be attached, this form must be signed by a responsible entity as described at 40 CFR 144.32. Note: operators closing Class V wells should use Form 7520-17.

NAME, ADDRESS, PHONE AND/OR EMAIL OF PERMITTEE: Enter the name and street address, city/town, state, and ZIP code of the permittee. Also provide an email address (if available) and/or a phone number.

PERMIT OR EPA ID NUMBER: Enter the well identification number or permit number assigned to the well by the EPA or the permitting authority.

API NUMBER: Enter the number assigned by the local jurisdiction (usually a State Oil and Gas Agency) using the American Petroleum Institute standard numbering system.

FULL WELL NAME: Enter the full name of the well or project.

Enter the **STATE** and **COUNTY** where the well is located. For States that do not have counties, use the name of that State's equivalent jurisdiction at a more local level.

WELL LOCATION: Fill in the complete township, range, and section to the nearest quarter-quarter section. A township is north or south of the baseline, and a range is east or west of the principal meridian (e.g., T12N, R34W). Also include the distance, in feet, from the nearest north or south line and nearest east or west line of the quarter-section. Also, enter the **latitude** and **longitude** of the well in decimal degrees, to five or six places if possible; be sure to include a negative sign for the longitude of a well in the Western Hemisphere and a negative sign for the latitude of a well in the Southern Hemisphere.

Enter the **WELL CLASS,** i.e., the class of injection well as defined in 40 CFR 144.6.

TIMING OF THE ACTION: Check ***Notice prior to work*** if the activity has not yet occurred (i.e., is planned). Check ***Report after work*** if the activity described has already occurred. As appropriate, include the date the activity is expected to start or the date the activity was completed. (Note this may not be available, e.g., for a plugging plan submitted with a permit application.)

TYPE OF ACTION: Check the appropriate box to describe the kind of activity being reported. Check ***Well Rework*** for work that was/will be performed on the well after it has already been in operation as an injection well. Check ***Plugging and Abandonment*** to report on plans for or descriptions of final closure/plugging after use as an injection well. Check ***Conversion to a Non-Injection Well*** if the well is to be converted to something other than an injection well.

Provide a **NARRATIVE DESCRIPTION** of the work planned to be performed, or that was performed. The narrative should include a description of the main procedures planned or that occurred during the work activity. A service company report, daily report, or similar document may be attached if it includes all the requested information and is clear and legible.

For well reworks, include the following information: The reason for the well rework; depths of activity; type of activity; changes to injection well configuration, well casing, or cement behind casing; any plug added to the well and its depth; any newly drilled interval and its depth; method(s) to demonstrate that the well has mechanical integrity (as applicable); and any deviations from the approved rework plan (as applicable).

For a well plugging plan, include the following information: Reason for the well plugging; number of plugs placed, and their depths; materials used as plugs (e.g., cast iron bridge plug, cement, cement retainer); method to set plugs; and wait-on-cement times, if any. Also provide one or more cost estimates from an independent firm in the business of plugging and abandoning wells to plug the well as described in the plan.

For well plugging affidavit, include the following information: Reason for the well plugging; number of plugs placed, and their depths; materials used as plugs (e.g., cast iron bridge plug, cement, cement retainer); method to set plugs; wait-on-cement times, if any; and any deviations from the approved plugging plan (if applicable).

For conversion to a non-injection well, include the following information: Depths of activity; type of activity; changes to injection well configuration, well casing, or cement behind casing; any plug added to the well and its depth; any newly drilled interval and its depth; depths of new perforations; and method(s) to demonstrate that the well has mechanical integrity (as applicable).

For all of the above activities, include a well sketch depicting the work, results of well tests/logging performed, service company tickets, and any other available information demonstrating how the work was/is to be performed. Also, specify whether depths are below ground surface, relative to Kelly bushing, etc.

CERTIFICATION: This form must be signed and dated by either: a responsible corporate officer for a corporation, by a general partner for a partnership, by the proprietor of a sole proprietorship, or by a principal executive or ranking elected official for a public agency.

PAPERWORK REDUCTION ACT NOTICE: The public reporting and recordkeeping burden for this collection of information is estimated to average between 6.0 and 7.9 hours per response, depending on the injection well class. Burden means the total time, effort, or financial resource expended by persons to generate, maintain, retain, or disclose or provide information to or for a Federal Agency. This includes the time needed to review instructions; develop, acquire, install, and utilize technology and systems for the purposes of collecting, validating, and verifying information, processing and maintaining information, and disclosing and providing information; adjust the existing ways to comply with any previously applicable instructions and requirements; train personnel to be able to respond to the collection of information; search data sources; complete and review the collection of information; and, transmit or otherwise disclose the information. An agency may not conduct or sponsor, and a person is not required to respond to, a collection of information unless it displays a currently valid OMB control number. Send comments on the Agency's need for this information, the accuracy of the provided burden estimates, and any suggested methods for minimizing respondent burden, including the use of automated collection techniques to Director, Collection Strategies Division, U.S. Environmental Protection Agency (2822), 1200 Pennsylvania Ave., NW., Washington, D.C. 20460. Include the OMB control number in any correspondence. Do not send the completed forms to this address.

AS-BUILT COREHOLE 280S

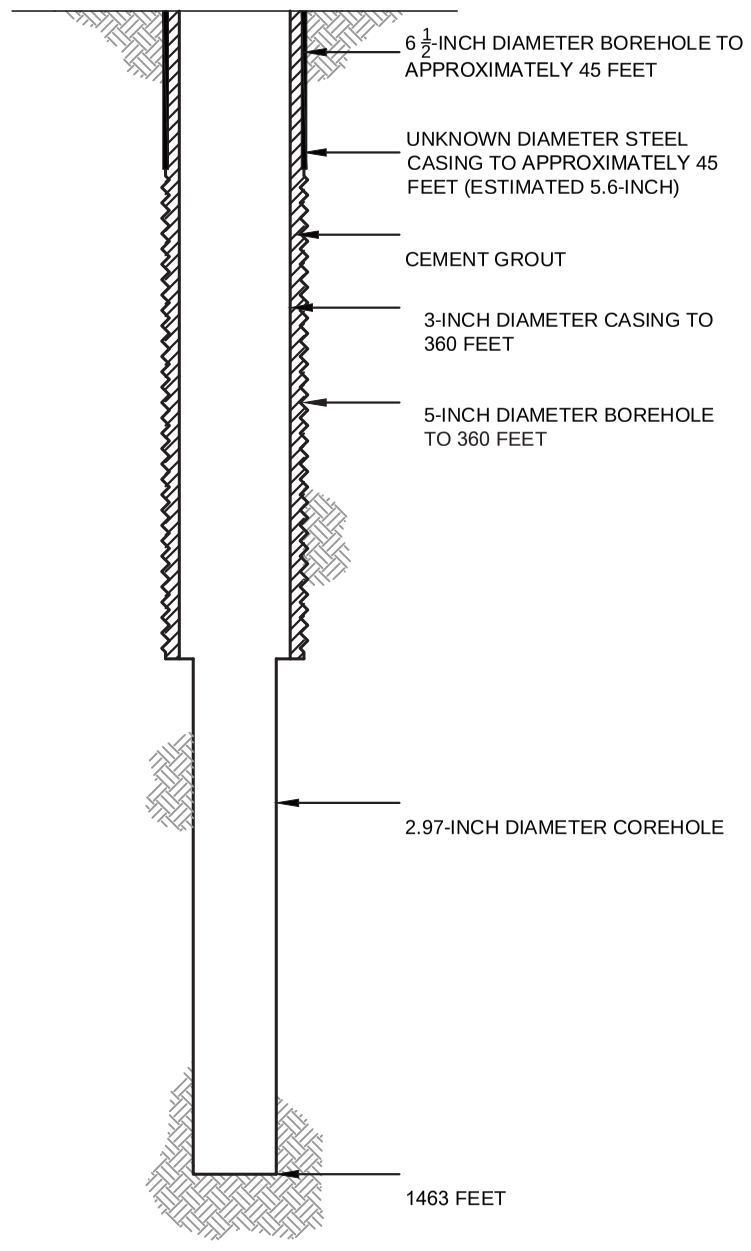

PROPOSED PLUGGING AND ABANDONMENT COREHOLE 280S

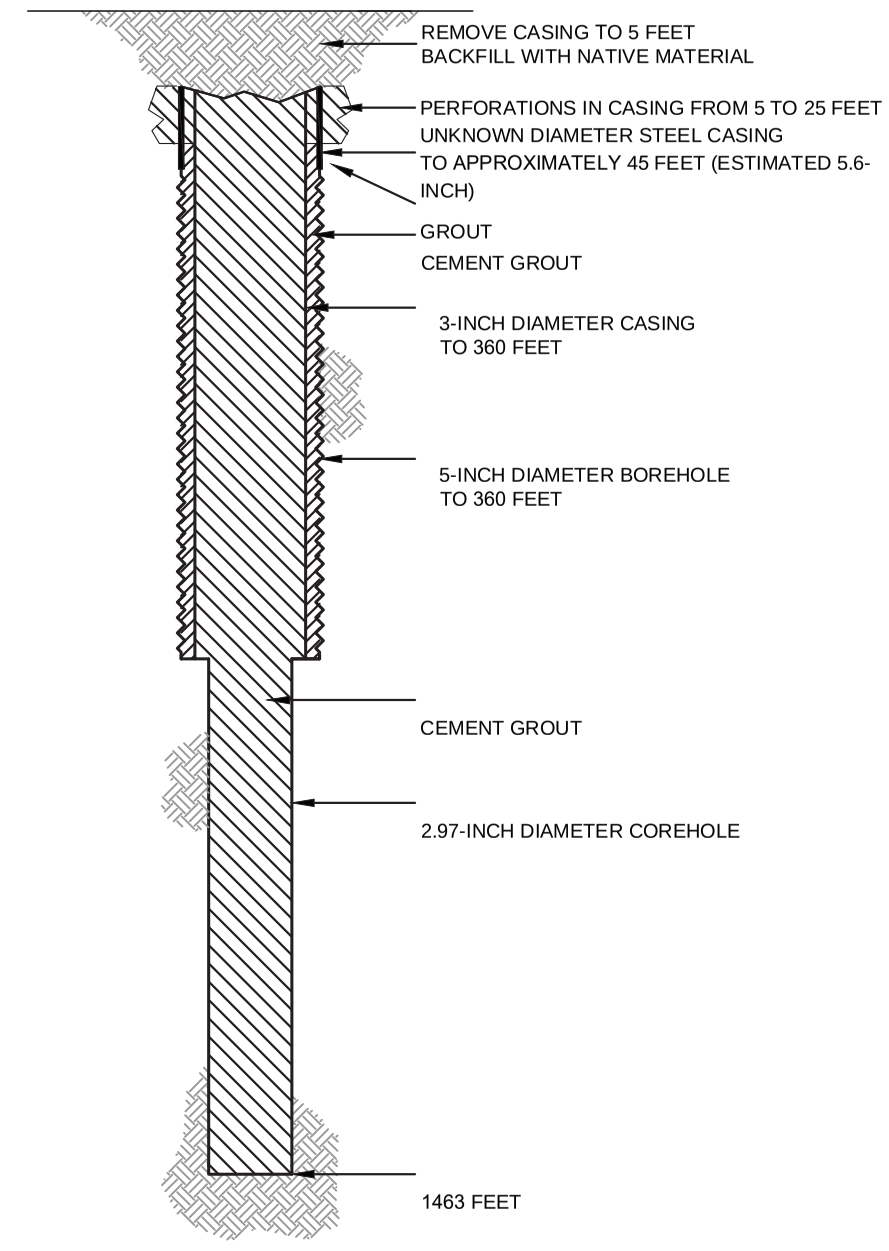

HALEY ALDRICH

FLORENCE COPPER, INC.
FLORENCE, ARIZONA

COREHOLE 280S DIAGRAM

FLORENCE COPPER INC.

NOT TO SCALE
SEPTEMBER 2019

FIGURE 1

MOBINI, GITA Printed: 4/21/2017 12:00 PM Layout: ABANDON (2)
G:\PROJECTS\CURIS RESOURCES\38706-CURIS FEASIBILITY\DRAWINGS\EPA\WELL ABANDON\415S_ABANDON.DWG

OMB No. 2040-0042 Approval Expires 4/30/2022

United States Environmental Protection Agency

WELL REWORK RECORD, PLUGGING AND ABANDONMENT PLAN, OR PLUGGING AND ABANDONMENT AFFIDAVIT

Name and Address, Phone Number and/or Email of Permittee

Florence Copper Project
1575 W Hunt Hwy,
Florence, AZ 85132

Permit or EPA ID Number	API Number	Full Well Name
R9UIC-AZ3-FY11-1		282S

State	County
Arizona	Pinal

Locate well in two directions from nearest lines of quarter section and drilling unit

Latitude 33.05012402

Longitude -111.4268631

Surface Location

NW **1/4 of** SE **1/4 of Section** 28 **Township** 4S **Range** 9E

_____ **ft. from (N/S)** _____ **Line of quarter section**

_____ **ft. from (E/W)** _____ **Line of quarter section.**

Well Class	Timing of Action (pick one)	Type of Action (pick one)
☐ Class I ☐ Class II ☑ Class III ☐ Class V	☑ Notice Prior to Work Date Expected to Commence March 2021 ☐ Report After Work Date Work Ended	☐ Well Rework ☑ Plugging and Abandonment ☐ Conversion to a Non-Injection Well

Provide a narrative description of the work planned to be performed, or that was performed. Use additional pages as necessary. See instructions.

A workover rig capable of performing the required abandonment operations at the required depths will be moved in and set up over the core hole. The core hole will be inspected to determine the depth to which the hole remains open and if any obstructions are present in the core hole; the presence and condition of any existing collar will also be documented. If necessary, the core hole will be cleaned out to a depth of at least 100 feet below the bedrock-LBFU contact to enable placement of cement seals.

If collar is present, an attempt will be made to remove it. If removal of the collar is not feasible, it will be left in the hole and perforated as needed to allow an annular seal to be placed to a depth of at least 25 feet bgs. In areas of agricultural use, the surface casing will be cut at least 5 feet bgs and removed.

If the collar cannot be removed, it will be perforated from at least 20 feet below the bedrock-LBFU contact to at least 20 feet above the contact; from at least 20 feet below the base of the MFGU to at least 20 feet above the top of the MFGU; and from at least 25 feet bgs to 5 feet bgs.

A tremie pipe will be used to place Type V cement in the open core hole from the bottom of the core hole to the top of the core hole. Cement retainers, as described above, will be used to force cement grout into the annulus and behind perforated intervals, as necessary.

If the hole has been obstructed, as much cement as possible will be placed from 100 feet below the LBFU-bedrock contact to the top of the core hole.

The volume of Type V cement will be recorded and will not be less than the estimated volume of material required to fill each interval. All cement grout will consist of Type V cement, or equivalent approved in accordance with the UIC Permit.

Certification

I certify under the penalty of law that I have personally examined and am familiar with the information submitted in this document and all attachments and that, based on my inquiry of those individuals immediately responsible for obtaining the information, I believe that the information is true, accurate, and complete. I am aware that there are significant penalties for submitting false information, including the possibliity of fine and imprisonment. (Ref. 40 CFR § 144.32)

Name and Official Title *(Please type or print)*	Signature	Date Signed
Dan Johnson, VP - General Manager		10/3/2019

INSTRUCTIONS FOR FORM 7520-19

This form replaces forms 7520-12 and 7520-14. Use this form only when work is planned or has occurred that affects the well's construction or operation as an injection well, including work on the casing, tubing or packer (or for shallow Class V wells, the subsurface fluid emplacement network). Use one form per injection well. While reports or other information developed by contractors or service companies may be attached, this form must be signed by a responsible entity as described at 40 CFR 144.32. Note: operators closing Class V wells should use Form 7520-17.

NAME, ADDRESS, PHONE AND/OR EMAIL OF PERMITTEE: Enter the name and street address, city/town, state, and ZIP code of the permittee. Also provide an email address (if available) and/or a phone number.

PERMIT OR EPA ID NUMBER: Enter the well identification number or permit number assigned to the well by the EPA or the permitting authority.

API NUMBER: Enter the number assigned by the local jurisdiction (usually a State Oil and Gas Agency) using the American Petroleum Institute standard numbering system.

FULL WELL NAME: Enter the full name of the well or project.

Enter the **STATE** and **COUNTY** where the well is located. For States that do not have counties, use the name of that State's equivalent jurisdiction at a more local level.

WELL LOCATION: Fill in the complete township, range, and section to the nearest quarter-quarter section. A township is north or south of the baseline, and a range is east or west of the principal meridian (e.g., T12N, R34W). Also include the distance, in feet, from the nearest north or south line and nearest east or west line of the quarter-section. Also, enter the **latitude** and **longitude** of the well in decimal degrees, to five or six places if possible; be sure to include a negative sign for the longitude of a well in the Western Hemisphere and a negative sign for the latitude of a well in the Southern Hemisphere.

Enter the **WELL CLASS,** i.e., the class of injection well as defined in 40 CFR 144.6.

TIMING OF THE ACTION: Check ***Notice prior to work*** if the activity has not yet occurred (i.e., is planned). Check ***Report after work*** if the activity described has already occurred. As appropriate, include the date the activity is expected to start or the date the activity was completed. (Note this may not be available, e.g., for a plugging plan submitted with a permit application.)

TYPE OF ACTION: Check the appropriate box to describe the kind of activity being reported. Check ***Well Rework*** for work that was/will be performed on the well after it has already been in operation as an injection well. Check ***Plugging and Abandonment*** to report on plans for or descriptions of final closure/plugging after use as an injection well. Check ***Conversion to a Non-Injection Well*** if the well is to be converted to something other than an injection well.

Provide a **NARRATIVE DESCRIPTION** of the work planned to be performed, or that was performed. The narrative should include a description of the main procedures planned or that occurred during the work activity. A service company report, daily report, or similar document may be attached if it includes all the requested information and is clear and legible.

For well reworks, include the following information: The reason for the well rework; depths of activity; type of activity; changes to injection well configuration, well casing, or cement behind casing; any plug added to the well and its depth; any newly drilled interval and its depth; method(s) to demonstrate that the well has mechanical integrity (as applicable); and any deviations from the approved rework plan (as applicable).

For a well plugging plan, include the following information: Reason for the well plugging; number of plugs placed, and their depths; materials used as plugs (e.g., cast iron bridge plug, cement, cement retainer); method to set plugs; and wait-on-cement times, if any. Also provide one or more cost estimates from an independent firm in the business of plugging and abandoning wells to plug the well as described in the plan.

For well plugging affidavit, include the following information: Reason for the well plugging; number of plugs placed, and their depths; materials used as plugs (e.g., cast iron bridge plug, cement, cement retainer); method to set plugs; wait-on-cement times, if any; and any deviations from the approved plugging plan (if applicable).

For conversion to a non-injection well, include the following information: Depths of activity; type of activity; changes to injection well configuration, well casing, or cement behind casing; any plug added to the well and its depth; any newly drilled interval and its depth; depths of new perforations; and method(s) to demonstrate that the well has mechanical integrity (as applicable).

For all of the above activities, include a well sketch depicting the work, results of well tests/logging performed, service company tickets, and any other available information demonstrating how the work was/is to be performed. Also, specify whether depths are below ground surface, relative to Kelly bushing, etc.

CERTIFICATION: This form must be signed and dated by either: a responsible corporate officer for a corporation, by a general partner for a partnership, by the proprietor of a sole proprietorship, or by a principal executive or ranking elected official for a public agency.

PAPERWORK REDUCTION ACT NOTICE: The public reporting and recordkeeping burden for this collection of information is estimated to average between 6.0 and 7.9 hours per response, depending on the injection well class. Burden means the total time, effort, or financial resource expended by persons to generate, maintain, retain, or disclose or provide information to or for a Federal Agency. This includes the time needed to review instructions; develop, acquire, install, and utilize technology and systems for the purposes of collecting, validating, and verifying information, processing and maintaining information, and disclosing and providing information; adjust the existing ways to comply with any previously applicable instructions and requirements; train personnel to be able to respond to the collection of information; search data sources; complete and review the collection of information; and, transmit or otherwise disclose the information. An agency may not conduct or sponsor, and a person is not required to respond to, a collection of information unless it displays a currently valid OMB control number. Send comments on the Agency's need for this information, the accuracy of the provided burden estimates, and any suggested methods for minimizing respondent burden, including the use of automated collection techniques to Director, Collection Strategies Division, U.S. Environmental Protection Agency (2822), 1200 Pennsylvania Ave., NW., Washington, D.C. 20460. Include the OMB control number in any correspondence. Do not send the completed forms to this address.

AS-BUILT COREHOLE 282S

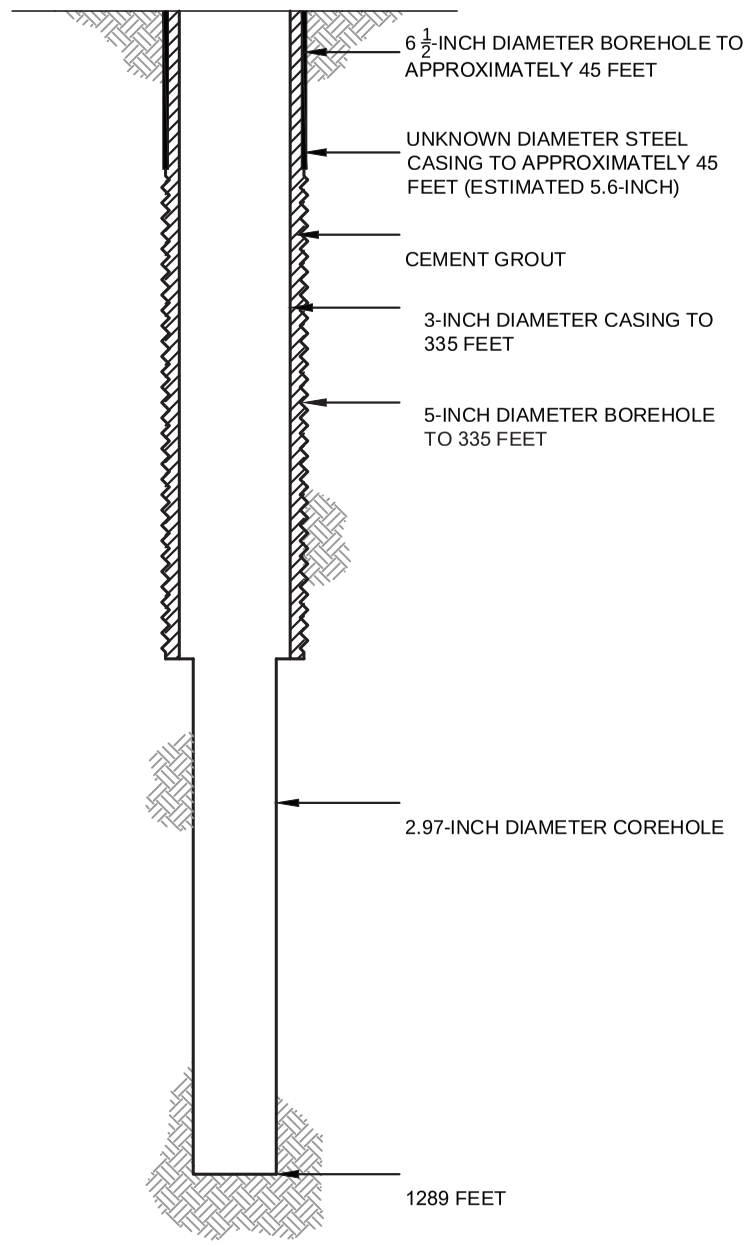

PROPOSED PLUGGING AND ABANDONMENT COREHOLE 282S

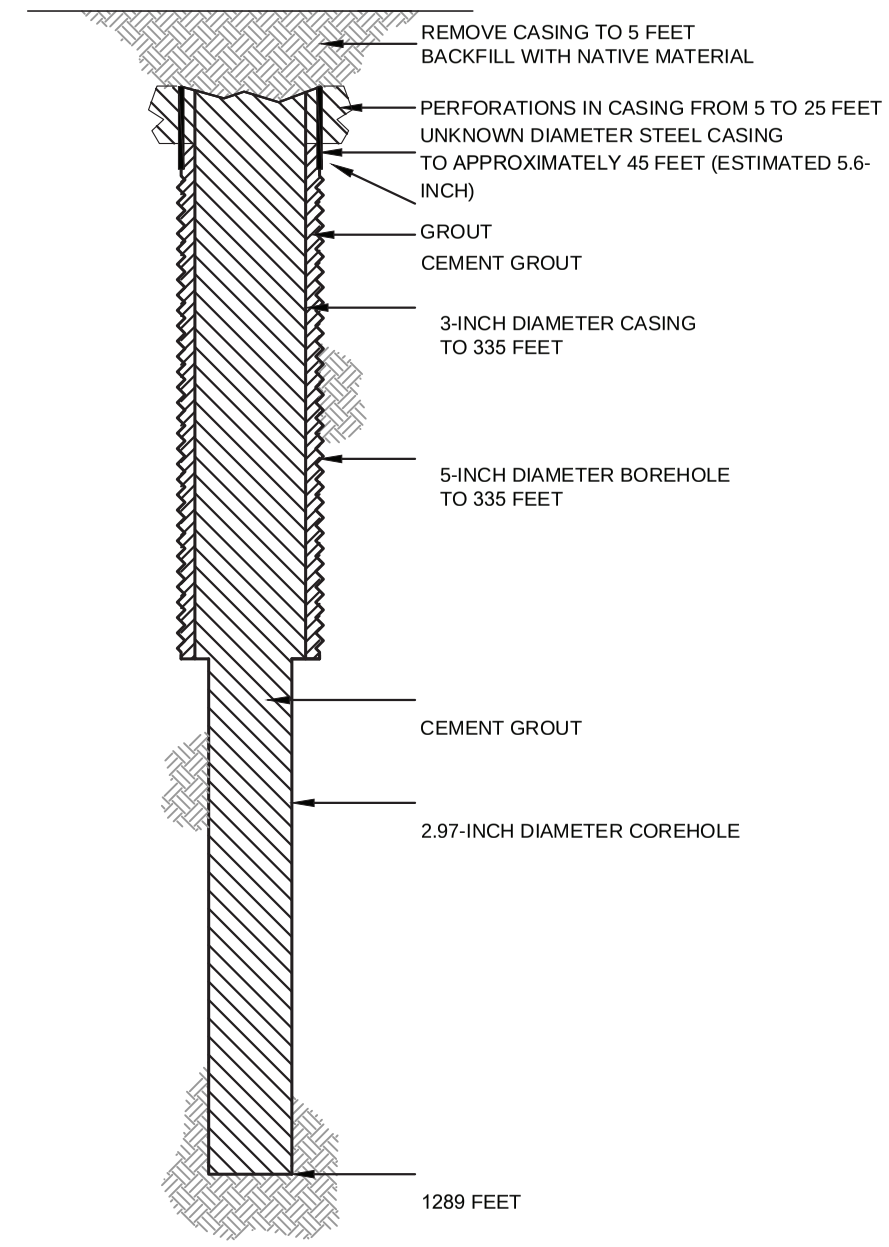

HALEY ALDRICH

FLORENCE COPPER, INC.
FLORENCE, ARIZONA

COREHOLE 282S DIAGRAM

FLORENCE COPPER INC.

NOT TO SCALE
SEPTEMBER 2019

FIGURE 1

MOBINI, GITA Printed: 4/21/2017 12:00 PM Layout: ABANDON (2)
G:\PROJECTS\CURIS RESOURCES\38706-CURIS FEASIBILITY\DRAWINGS\EPA\WELL ABANDON\415S_ABANDON.DWG

OMB No. 2040-0042 Approval Expires 4/30/2022

United States Environmental Protection Agency

WELL REWORK RECORD, PLUGGING AND ABANDONMENT PLAN, OR PLUGGING AND ABANDONMENT AFFIDAVIT

Name and Address, Phone Number and/or Email of Permittee

Florence Copper Project
1575 W Hunt Hwy,
Florence, AZ 85132

Permit or EPA ID Number	API Number	Full Well Name
R9UIC-AZ3-FY11-1		316

State	County
Arizona	Pinal

Locate well in two directions from nearest lines of quarter section and drilling unit

Latitude 33.05333897

Surface Location

SE **1/4 of** NW **1/4 of Section** 28 **Township** 4S **Range** 9E

Longitude -111.4323965

_____ **ft. from (N/S)** _____ **Line of quarter section**

_____ **ft. from (E/W)** _____ **Line of quarter section.**

Well Class	Timing of Action (pick one)	Type of Action (pick one)
☐ Class I ☐ Class II ☑ Class III ☐ Class V	☑ Notice Prior to Work Date Expected to Commence March 2021 ☐ Report After Work Date Work Ended	☐ Well Rework ☑ Plugging and Abandonment ☐ Conversion to a Non-Injection Well

Provide a narrative description of the work planned to be performed, or that was performed. Use additional pages as necessary. See instructions.

A workover rig capable of performing the required abandonment operations at the required depths will be moved in and set up over the core hole. The core hole will be inspected to determine the depth to which the hole remains open and if any obstructions are present in the core hole; the presence and condition of any existing collar will also be documented. If necessary, the core hole will be cleaned out to a depth of at least 100 feet below the bedrock-LBFU contact to enable placement of cement seals.

If collar is present, an attempt will be made to remove it. If removal of the collar is not feasible, it will be left in the hole and perforated as needed to allow an annular seal to be placed to a depth of at least 25 feet bgs. In areas of agricultural use, the surface casing will be cut at least 5 feet bgs and removed.

If the collar cannot be removed, it will be perforated from at least 20 feet below the bedrock-LBFU contact to at least 20 feet above the contact; from at least 20 feet below the base of the MFGU to at least 20 feet above the top of the MFGU; and from at least 25 feet bgs to 5 feet bgs.

A tremie pipe will be used to place Type V cement in the open core hole from the bottom of the core hole to the top of the core hole. Cement retainers, as described above, will be used to force cement grout into the annulus and behind perforated intervals, as necessary.

If the hole has been obstructed, as much cement as possible will be placed from 100 feet below the LBFU-bedrock contact to the top of the core hole.

The volume of Type V cement will be recorded and will not be less than the estimated volume of material required to fill each interval. All cement grout will consist of Type V cement, or equivalent approved in accordance with the UIC Permit.

Certification

I certify under the penalty of law that I have personally examined and am familiar with the information submitted in this document and all attachments and that, based on my inquiry of those individuals immediately responsible for obtaining the information, I believe that the information is true, accurate, and complete. I am aware that there are significant penalties for submitting false information, including the possibliity of fine and imprisonment. (Ref. 40 CFR § 144.32)

Name and Official Title *(Please type or print)*	Signature	Date Signed
Dan Johnson, VP - General Manager		10/3/2019

INSTRUCTIONS FOR FORM 7520-19

This form replaces forms 7520-12 and 7520-14. Use this form only when work is planned or has occurred that affects the well's construction or operation as an injection well, including work on the casing, tubing or packer (or for shallow Class V wells, the subsurface fluid emplacement network). Use one form per injection well. While reports or other information developed by contractors or service companies may be attached, this form must be signed by a responsible entity as described at 40 CFR 144.32. Note: operators closing Class V wells should use Form 7520-17.

NAME, ADDRESS, PHONE AND/OR EMAIL OF PERMITTEE: Enter the name and street address, city/town, state, and ZIP code of the permittee. Also provide an email address (if available) and/or a phone number.

PERMIT OR EPA ID NUMBER: Enter the well identification number or permit number assigned to the well by the EPA or the permitting authority.

API NUMBER: Enter the number assigned by the local jurisdiction (usually a State Oil and Gas Agency) using the American Petroleum Institute standard numbering system.

FULL WELL NAME: Enter the full name of the well or project.

Enter the **STATE** and **COUNTY** where the well is located. For States that do not have counties, use the name of that State's equivalent jurisdiction at a more local level.

WELL LOCATION: Fill in the complete township, range, and section to the nearest quarter-quarter section. A township is north or south of the baseline, and a range is east or west of the principal meridian (e.g., T12N, R34W). Also include the distance, in feet, from the nearest north or south line and nearest east or west line of the quarter-section. Also, enter the **latitude** and **longitude** of the well in decimal degrees, to five or six places if possible; be sure to include a negative sign for the longitude of a well in the Western Hemisphere and a negative sign for the latitude of a well in the Southern Hemisphere.

Enter the **WELL CLASS,** i.e., the class of injection well as defined in 40 CFR 144.6.

TIMING OF THE ACTION: Check ***Notice prior to work*** if the activity has not yet occurred (i.e., is planned). Check ***Report after work*** if the activity described has already occurred. As appropriate, include the date the activity is expected to start or the date the activity was completed. (Note this may not be available, e.g., for a plugging plan submitted with a permit application.)

TYPE OF ACTION: Check the appropriate box to describe the kind of activity being reported. Check ***Well Rework*** for work that was/will be performed on the well after it has already been in operation as an injection well. Check ***Plugging and Abandonment*** to report on plans for or descriptions of final closure/plugging after use as an injection well. Check ***Conversion to a Non-Injection Well*** if the well is to be converted to something other than an injection well.

Provide a **NARRATIVE DESCRIPTION** of the work planned to be performed, or that was performed. The narrative should include a description of the main procedures planned or that occurred during the work activity. A service company report, daily report, or similar document may be attached if it includes all the requested information and is clear and legible.

For well reworks, include the following information: The reason for the well rework; depths of activity; type of activity; changes to injection well configuration, well casing, or cement behind casing; any plug added to the well and its depth; any newly drilled interval and its depth; method(s) to demonstrate that the well has mechanical integrity (as applicable); and any deviations from the approved rework plan (as applicable).

For a well plugging plan, include the following information: Reason for the well plugging; number of plugs placed, and their depths; materials used as plugs (e.g., cast iron bridge plug, cement, cement retainer); method to set plugs; and wait-on-cement times, if any. Also provide one or more cost estimates from an independent firm in the business of plugging and abandoning wells to plug the well as described in the plan.

For well plugging affidavit, include the following information: Reason for the well plugging; number of plugs placed, and their depths; materials used as plugs (e.g., cast iron bridge plug, cement, cement retainer); method to set plugs; wait-on-cement times, if any; and any deviations from the approved plugging plan (if applicable).

For conversion to a non-injection well, include the following information: Depths of activity; type of activity; changes to injection well configuration, well casing, or cement behind casing; any plug added to the well and its depth; any newly drilled interval and its depth; depths of new perforations; and method(s) to demonstrate that the well has mechanical integrity (as applicable).

For all of the above activities, include a well sketch depicting the work, results of well tests/logging performed, service company tickets, and any other available information demonstrating how the work was/is to be performed. Also, specify whether depths are below ground surface, relative to Kelly bushing, etc.

CERTIFICATION: This form must be signed and dated by either: a responsible corporate officer for a corporation, by a general partner for a partnership, by the proprietor of a sole proprietorship, or by a principal executive or ranking elected official for a public agency.

PAPERWORK REDUCTION ACT NOTICE: The public reporting and recordkeeping burden for this collection of information is estimated to average between 6.0 and 7.9 hours per response, depending on the injection well class. Burden means the total time, effort, or financial resource expended by persons to generate, maintain, retain, or disclose or provide information to or for a Federal Agency. This includes the time needed to review instructions; develop, acquire, install, and utilize technology and systems for the purposes of collecting, validating, and verifying information, processing and maintaining information, and disclosing and providing information; adjust the existing ways to comply with any previously applicable instructions and requirements; train personnel to be able to respond to the collection of information; search data sources; complete and review the collection of information; and, transmit or otherwise disclose the information. An agency may not conduct or sponsor, and a person is not required to respond to, a collection of information unless it displays a currently valid OMB control number. Send comments on the Agency's need for this information, the accuracy of the provided burden estimates, and any suggested methods for minimizing respondent burden, including the use of automated collection techniques to Director, Collection Strategies Division, U.S. Environmental Protection Agency (2822), 1200 Pennsylvania Ave., NW., Washington, D.C. 20460. Include the OMB control number in any correspondence. Do not send the completed forms to this address.

AS-BUILT COREHOLE 316

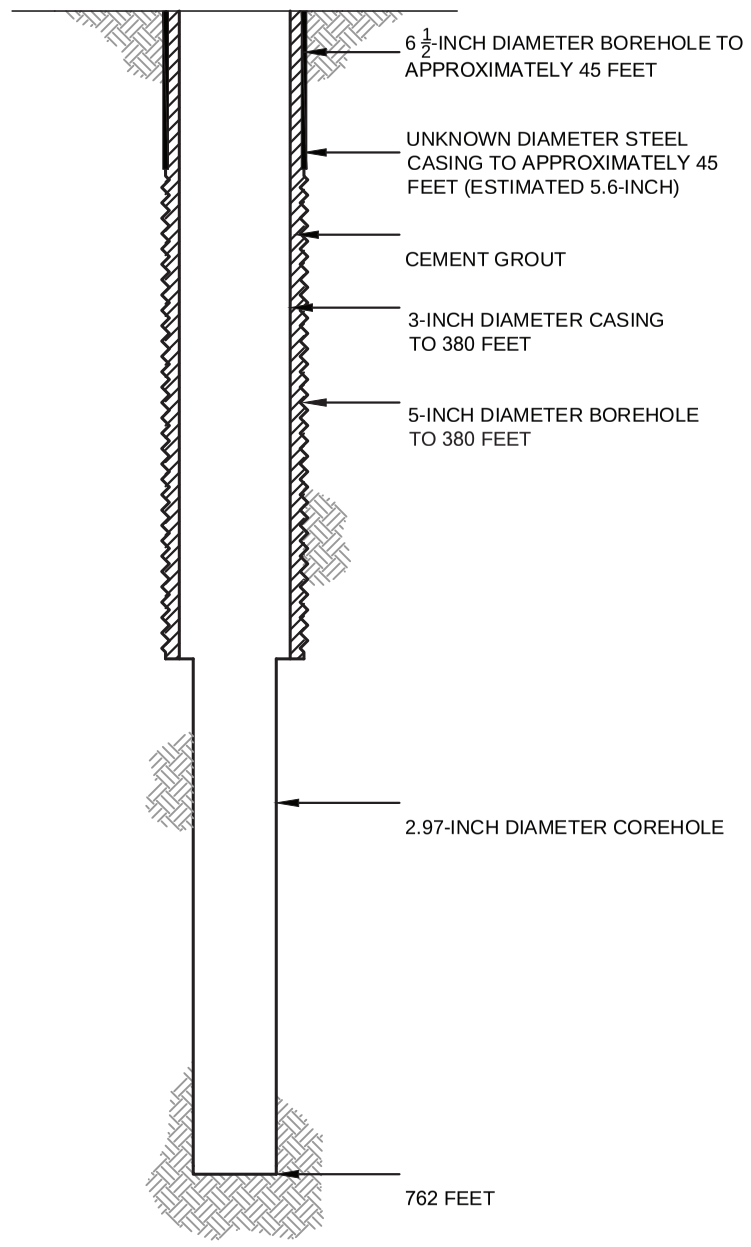

PROPOSED PLUGGING AND ABANDONMENT COREHOLE 316

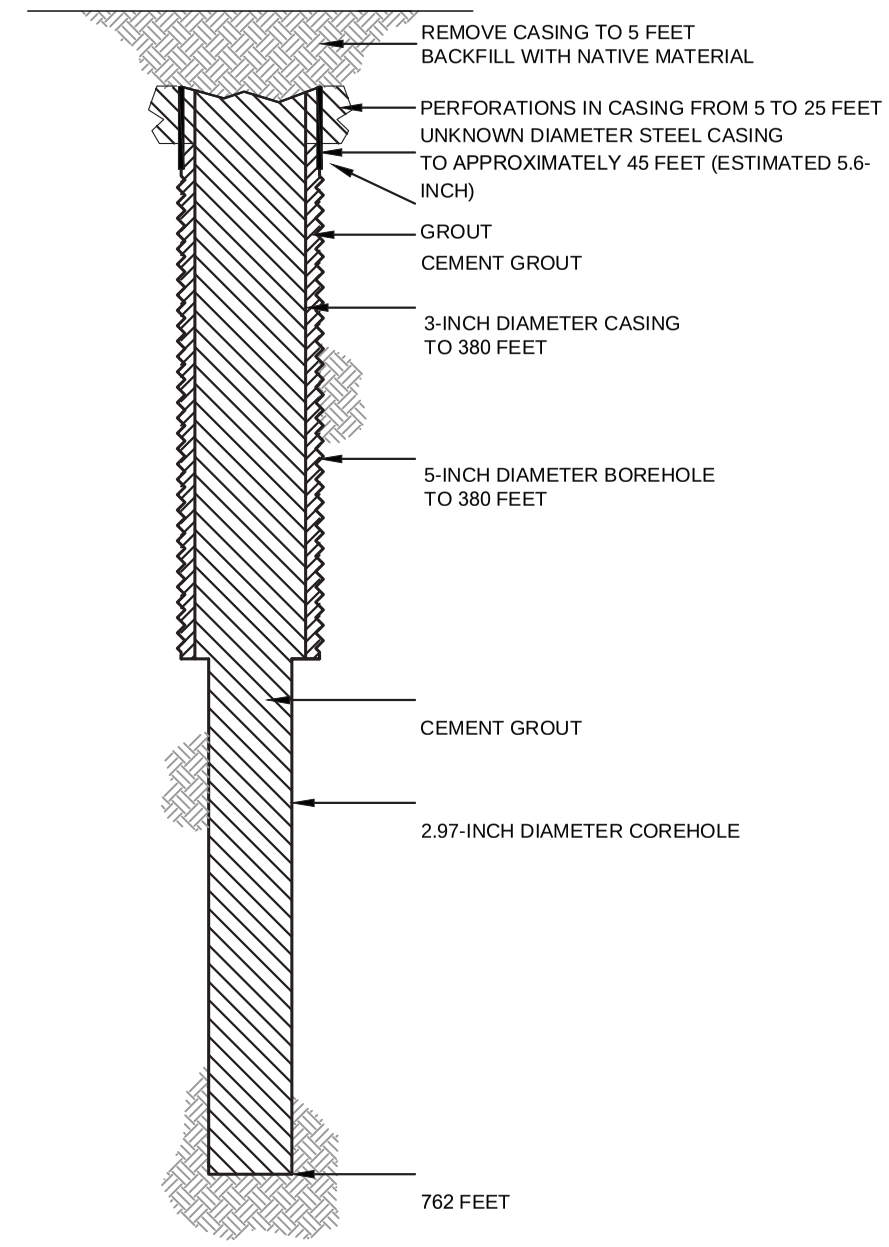

HALEY ALDRICH

FLORENCE COPPER, INC.
FLORENCE, ARIZONA

COREHOLE 316 DIAGRAM

FLORENCE COPPER INC.

NOT TO SCALE
SEPTEMBER 2019

FIGURE 1

MOBINI, GITA Printed: 4/21/2017 12:00 PM Layout: ABANDON (2)
G:\PROJECTS\CURIS RESOURCES\38706-CURIS FEASIBILITY\DRAWINGS\EPA\WELL ABANDON\415S_ABANDON.DWG

OMB No. 2040-0042 Approval Expires 4/30/2022

United States Environmental Protection Agency

WELL REWORK RECORD, PLUGGING AND ABANDONMENT PLAN, OR PLUGGING AND ABANDONMENT AFFIDAVIT

Name and Address, Phone Number and/or Email of Permittee

Florence Copper Project
1575 W Hunt Hwy,
Florence, AZ 85132

Permit or EPA ID Number	API Number	Full Well Name
R9UIC-AZ3-FY11-1		326S

State	County
Arizona	Pinal

Locate well in two directions from nearest lines of quarter section and drilling unit

Latitude 33.05091849

Longitude -111.4240311

Surface Location

NE **1/4 of** SE **1/4 of Section** 28 **Township** 4S **Range** 9E

_____ **ft. from (N/S)** _____ **Line of quarter section**

_____ **ft. from (E/W)** _____ **Line of quarter section.**

Well Class	Timing of Action (pick one)	Type of Action (pick one)
☐ Class I ☐ Class II ☑ Class III ☐ Class V	☑ Notice Prior to Work Date Expected to Commence March 2021 ☐ Report After Work Date Work Ended	☐ Well Rework ☑ Plugging and Abandonment ☐ Conversion to a Non-Injection Well

Provide a narrative description of the work planned to be performed, or that was performed. Use additional pages as necessary. See instructions.

A workover rig capable of performing the required abandonment operations at the required depths will be moved in and set up over the core hole. The core hole will be inspected to determine the depth to which the hole remains open and if any obstructions are present in the core hole; the presence and condition of any existing collar will also be documented. If necessary, the core hole will be cleaned out to a depth of at least 100 feet below the bedrock-LBFU contact to enable placement of cement seals.

If collar is present, an attempt will be made to remove it. If removal of the collar is not feasible, it will be left in the hole and perforated as needed to allow an annular seal to be placed to a depth of at least 25 feet bgs. In areas of agricultural use, the surface casing will be cut at least 5 feet bgs and removed.

If the collar cannot be removed, it will be perforated from at least 20 feet below the bedrock-LBFU contact to at least 20 feet above the contact; from at least 20 feet below the base of the MFGU to at least 20 feet above the top of the MFGU; and from at least 25 feet bgs to 5 feet bgs.

A tremie pipe will be used to place Type V cement in the open core hole from the bottom of the core hole to the top of the core hole. Cement retainers, as described above, will be used to force cement grout into the annulus and behind perforated intervals, as necessary.

If the hole has been obstructed, as much cement as possible will be placed from 100 feet below the LBFU-bedrock contact to the top of the core hole.

The volume of Type V cement will be recorded and will not be less than the estimated volume of material required to fill each interval. All cement grout will consist of Type V cement, or equivalent approved in accordance with the UIC Permit.

Certification

I certify under the penalty of law that I have personally examined and am familiar with the information submitted in this document and all attachments and that, based on my inquiry of those individuals immediately responsible for obtaining the information, I believe that the information is true, accurate, and complete. I am aware that there are significant penalties for submitting false information, including the possibliity of fine and imprisonment. (Ref. 40 CFR § 144.32)

Name and Official Title *(Please type or print)*	Signature	Date Signed
Dan Johnson, VP - General Manager		10/3/2019

INSTRUCTIONS FOR FORM 7520-19

This form replaces forms 7520-12 and 7520-14. Use this form only when work is planned or has occurred that affects the well's construction or operation as an injection well, including work on the casing, tubing or packer (or for shallow Class V wells, the subsurface fluid emplacement network). Use one form per injection well. While reports or other information developed by contractors or service companies may be attached, this form must be signed by a responsible entity as described at 40 CFR 144.32. Note: operators closing Class V wells should use Form 7520-17.

NAME, ADDRESS, PHONE AND/OR EMAIL OF PERMITTEE: Enter the name and street address, city/town, state, and ZIP code of the permittee. Also provide an email address (if available) and/or a phone number.

PERMIT OR EPA ID NUMBER: Enter the well identification number or permit number assigned to the well by the EPA or the permitting authority.

API NUMBER: Enter the number assigned by the local jurisdiction (usually a State Oil and Gas Agency) using the American Petroleum Institute standard numbering system.

FULL WELL NAME: Enter the full name of the well or project.

Enter the **STATE** and **COUNTY** where the well is located. For States that do not have counties, use the name of that State's equivalent jurisdiction at a more local level.

WELL LOCATION: Fill in the complete township, range, and section to the nearest quarter-quarter section. A township is north or south of the baseline, and a range is east or west of the principal meridian (e.g., T12N, R34W). Also include the distance, in feet, from the nearest north or south line and nearest east or west line of the quarter-section. Also, enter the **latitude** and **longitude** of the well in decimal degrees, to five or six places if possible; be sure to include a negative sign for the longitude of a well in the Western Hemisphere and a negative sign for the latitude of a well in the Southern Hemisphere.

Enter the **WELL CLASS,** i.e., the class of injection well as defined in 40 CFR 144.6.

TIMING OF THE ACTION: Check ***Notice prior to work*** if the activity has not yet occurred (i.e., is planned). Check ***Report after work*** if the activity described has already occurred. As appropriate, include the date the activity is expected to start or the date the activity was completed. (Note this may not be available, e.g., for a plugging plan submitted with a permit application.)

TYPE OF ACTION: Check the appropriate box to describe the kind of activity being reported. Check ***Well Rework*** for work that was/will be performed on the well after it has already been in operation as an injection well. Check ***Plugging and Abandonment*** to report on plans for or descriptions of final closure/plugging after use as an injection well. Check ***Conversion to a Non-Injection Well*** if the well is to be converted to something other than an injection well.

Provide a **NARRATIVE DESCRIPTION** of the work planned to be performed, or that was performed. The narrative should include a description of the main procedures planned or that occurred during the work activity. A service company report, daily report, or similar document may be attached if it includes all the requested information and is clear and legible.

For well reworks, include the following information: The reason for the well rework; depths of activity; type of activity; changes to injection well configuration, well casing, or cement behind casing; any plug added to the well and its depth; any newly drilled interval and its depth; method(s) to demonstrate that the well has mechanical integrity (as applicable); and any deviations from the approved rework plan (as applicable).

For a well plugging plan, include the following information: Reason for the well plugging; number of plugs placed, and their depths; materials used as plugs (e.g., cast iron bridge plug, cement, cement retainer); method to set plugs; and wait-on-cement times, if any. Also provide one or more cost estimates from an independent firm in the business of plugging and abandoning wells to plug the well as described in the plan.

For well plugging affidavit, include the following information: Reason for the well plugging; number of plugs placed, and their depths; materials used as plugs (e.g., cast iron bridge plug, cement, cement retainer); method to set plugs; wait-on-cement times, if any; and any deviations from the approved plugging plan (if applicable).

For conversion to a non-injection well, include the following information: Depths of activity; type of activity; changes to injection well configuration, well casing, or cement behind casing; any plug added to the well and its depth; any newly drilled interval and its depth; depths of new perforations; and method(s) to demonstrate that the well has mechanical integrity (as applicable).

For all of the above activities, include a well sketch depicting the work, results of well tests/logging performed, service company tickets, and any other available information demonstrating how the work was/is to be performed. Also, specify whether depths are below ground surface, relative to Kelly bushing, etc.

CERTIFICATION: This form must be signed and dated by either: a responsible corporate officer for a corporation, by a general partner for a partnership, by the proprietor of a sole proprietorship, or by a principal executive or ranking elected official for a public agency.

PAPERWORK REDUCTION ACT NOTICE: The public reporting and recordkeeping burden for this collection of information is estimated to average between 6.0 and 7.9 hours per response, depending on the injection well class. Burden means the total time, effort, or financial resource expended by persons to generate, maintain, retain, or disclose or provide information to or for a Federal Agency. This includes the time needed to review instructions; develop, acquire, install, and utilize technology and systems for the purposes of collecting, validating, and verifying information, processing and maintaining information, and disclosing and providing information; adjust the existing ways to comply with any previously applicable instructions and requirements; train personnel to be able to respond to the collection of information; search data sources; complete and review the collection of information; and, transmit or otherwise disclose the information. An agency may not conduct or sponsor, and a person is not required to respond to, a collection of information unless it displays a currently valid OMB control number. Send comments on the Agency's need for this information, the accuracy of the provided burden estimates, and any suggested methods for minimizing respondent burden, including the use of automated collection techniques to Director, Collection Strategies Division, U.S. Environmental Protection Agency (2822), 1200 Pennsylvania Ave., NW., Washington, D.C. 20460. Include the OMB control number in any correspondence. Do not send the completed forms to this address.

AS-BUILT COREHOLE 326S

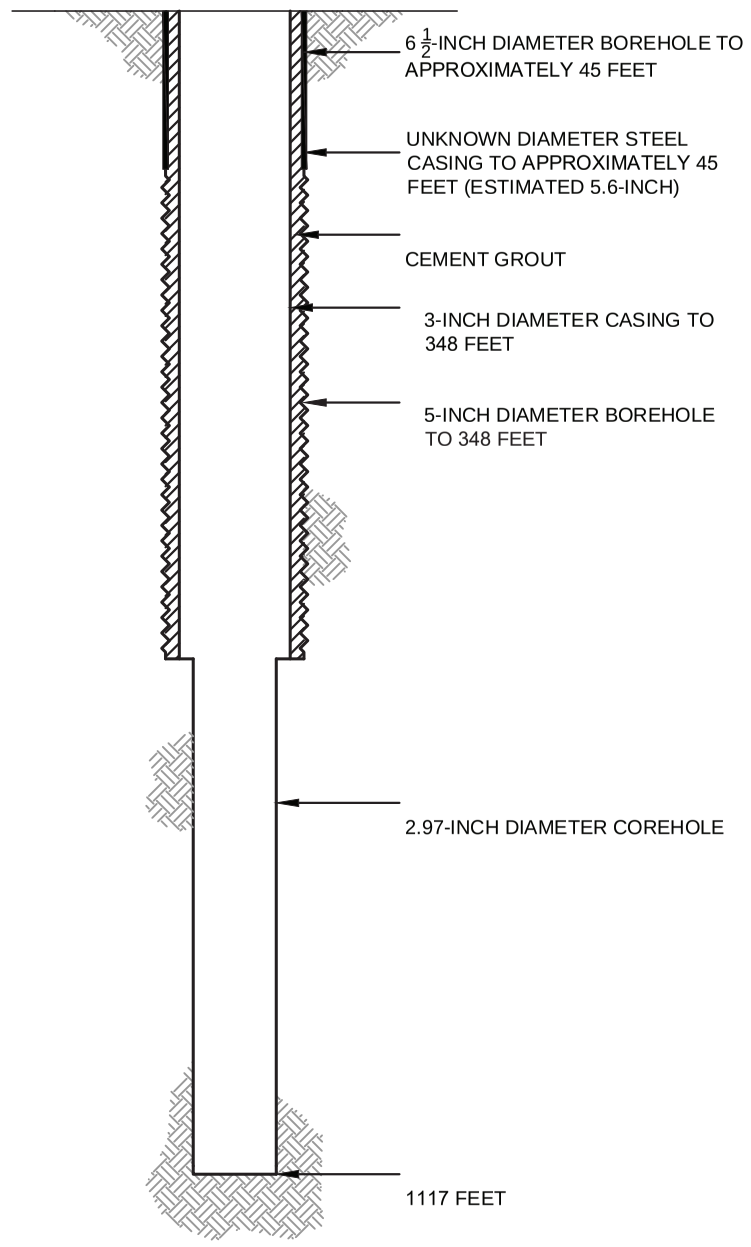

PROPOSED PLUGGING AND ABANDONMENT COREHOLE 326S

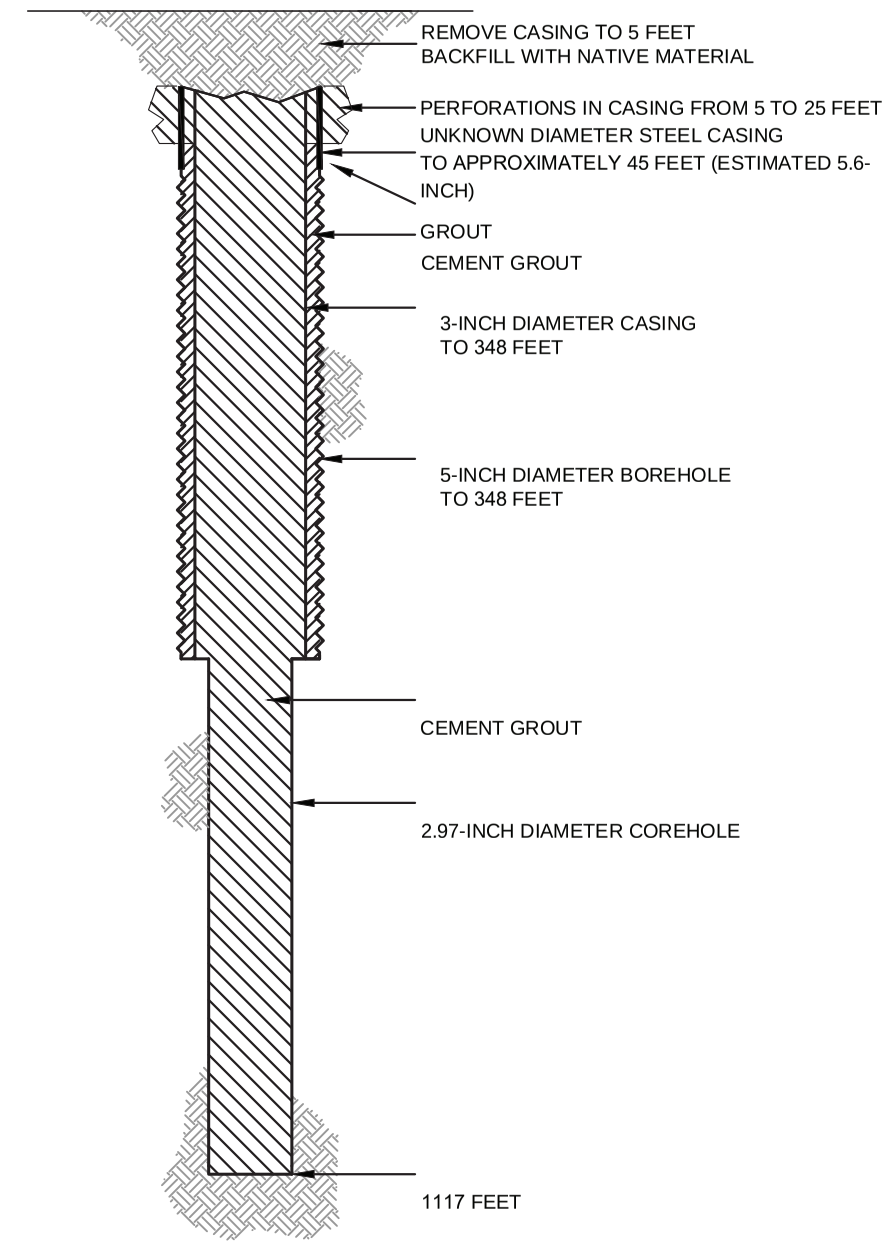

HALEY ALDRICH

FLORENCE COPPER, INC.
FLORENCE, ARIZONA

COREHOLE 326S DIAGRAM

FLORENCE COPPER INC.

NOT TO SCALE
SEPTEMBER 2019

FIGURE 1

MOBINI, GITA Printed: 4/21/2017 12:00 PM Layout: ABANDON (2)
G:\PROJECTS\CURIS RESOURCES\38706-CURIS FEASIBILITY\DRAWINGS\EPA\WELL ABANDON\415S_ABANDON.DWG

OMB No. 2040-0042 Approval Expires 4/30/2022

United States Environmental Protection Agency

WELL REWORK RECORD, PLUGGING AND ABANDONMENT PLAN, OR PLUGGING AND ABANDONMENT AFFIDAVIT

Name and Address, Phone Number and/or Email of Permittee

Florence Copper Project
1575 W Hunt Hwy,
Florence, AZ 85132

Permit or EPA ID Number	API Number	Full Well Name
R9UIC-AZ3-FY11-1		327S

State	County
Arizona	Pinal

Locate well in two directions from nearest lines of quarter section and drilling unit

Latitude 33.05151516

Surface Location

NE **1/4 of** SE **1/4 of Section** 28 **Township** 4S **Range** 9E

Longitude -111.4244357

_____ **ft. from (N/S)** _____ **Line of quarter section**

_____ **ft. from (E/W)** _____ **Line of quarter section.**

Well Class	Timing of Action (pick one)	Type of Action (pick one)
☐ Class I ☐ Class II ☑ Class III ☐ Class V	☑ Notice Prior to Work Date Expected to Commence March 2021 ☐ Report After Work Date Work Ended	☐ Well Rework ☑ Plugging and Abandonment ☐ Conversion to a Non-Injection Well

Provide a narrative description of the work planned to be performed, or that was performed. Use additional pages as necessary. See instructions.

A workover rig capable of performing the required abandonment operations at the required depths will be moved in and set up over the core hole. The core hole will be inspected to determine the depth to which the hole remains open and if any obstructions are present in the core hole; the presence and condition of any existing collar will also be documented. If necessary, the core hole will be cleaned out to a depth of at least 100 feet below the bedrock-LBFU contact to enable placement of cement seals.

If collar is present, an attempt will be made to remove it. If removal of the collar is not feasible, it will be left in the hole and perforated as needed to allow an annular seal to be placed to a depth of at least 25 feet bgs. In areas of agricultural use, the surface casing will be cut at least 5 feet bgs and removed.

If the collar cannot be removed, it will be perforated from at least 20 feet below the bedrock-LBFU contact to at least 20 feet above the contact; from at least 20 feet below the base of the MFGU to at least 20 feet above the top of the MFGU; and from at least 25 feet bgs to 5 feet bgs.

A tremie pipe will be used to place Type V cement in the open core hole from the bottom of the core hole to the top of the core hole. Cement retainers, as described above, will be used to force cement grout into the annulus and behind perforated intervals, as necessary.

If the hole has been obstructed, as much cement as possible will be placed from 100 feet below the LBFU-bedrock contact to the top of the core hole.

The volume of Type V cement will be recorded and will not be less than the estimated volume of material required to fill each interval. All cement grout will consist of Type V cement, or equivalent approved in accordance with the UIC Permit.

Certification

I certify under the penalty of law that I have personally examined and am familiar with the information submitted in this document and all attachments and that, based on my inquiry of those individuals immediately responsible for obtaining the information, I believe that the information is true, accurate, and complete. I am aware that there are significant penalties for submitting false information, including the possibliity of fine and imprisonment. (Ref. 40 CFR § 144.32)

Name and Official Title *(Please type or print)*	Signature	Date Signed
Dan Johnson, VP - General Manager		10/3/2019

INSTRUCTIONS FOR FORM 7520-19

This form replaces forms 7520-12 and 7520-14. Use this form only when work is planned or has occurred that affects the well's construction or operation as an injection well, including work on the casing, tubing or packer (or for shallow Class V wells, the subsurface fluid emplacement network). Use one form per injection well. While reports or other information developed by contractors or service companies may be attached, this form must be signed by a responsible entity as described at 40 CFR 144.32. Note: operators closing Class V wells should use Form 7520-17.

NAME, ADDRESS, PHONE AND/OR EMAIL OF PERMITTEE: Enter the name and street address, city/town, state, and ZIP code of the permittee. Also provide an email address (if available) and/or a phone number.

PERMIT OR EPA ID NUMBER: Enter the well identification number or permit number assigned to the well by the EPA or the permitting authority.

API NUMBER: Enter the number assigned by the local jurisdiction (usually a State Oil and Gas Agency) using the American Petroleum Institute standard numbering system.

FULL WELL NAME: Enter the full name of the well or project.

Enter the **STATE** and **COUNTY** where the well is located. For States that do not have counties, use the name of that State's equivalent jurisdiction at a more local level.

WELL LOCATION: Fill in the complete township, range, and section to the nearest quarter-quarter section. A township is north or south of the baseline, and a range is east or west of the principal meridian (e.g., T12N, R34W). Also include the distance, in feet, from the nearest north or south line and nearest east or west line of the quarter-section. Also, enter the **latitude** and **longitude** of the well in decimal degrees, to five or six places if possible; be sure to include a negative sign for the longitude of a well in the Western Hemisphere and a negative sign for the latitude of a well in the Southern Hemisphere.

Enter the **WELL CLASS,** i.e., the class of injection well as defined in 40 CFR 144.6.

TIMING OF THE ACTION: Check ***Notice prior to work*** if the activity has not yet occurred (i.e., is planned). Check ***Report after work*** if the activity described has already occurred. As appropriate, include the date the activity is expected to start or the date the activity was completed. (Note this may not be available, e.g., for a plugging plan submitted with a permit application.)

TYPE OF ACTION: Check the appropriate box to describe the kind of activity being reported. Check ***Well Rework*** for work that was/will be performed on the well after it has already been in operation as an injection well. Check ***Plugging and Abandonment*** to report on plans for or descriptions of final closure/plugging after use as an injection well. Check ***Conversion to a Non-Injection Well*** if the well is to be converted to something other than an injection well.

Provide a **NARRATIVE DESCRIPTION** of the work planned to be performed, or that was performed. The narrative should include a description of the main procedures planned or that occurred during the work activity. A service company report, daily report, or similar document may be attached if it includes all the requested information and is clear and legible.

For well reworks, include the following information: The reason for the well rework; depths of activity; type of activity; changes to injection well configuration, well casing, or cement behind casing; any plug added to the well and its depth; any newly drilled interval and its depth; method(s) to demonstrate that the well has mechanical integrity (as applicable); and any deviations from the approved rework plan (as applicable).

For a well plugging plan, include the following information: Reason for the well plugging; number of plugs placed, and their depths; materials used as plugs (e.g., cast iron bridge plug, cement, cement retainer); method to set plugs; and wait-on-cement times, if any. Also provide one or more cost estimates from an independent firm in the business of plugging and abandoning wells to plug the well as described in the plan.

For well plugging affidavit, include the following information: Reason for the well plugging; number of plugs placed, and their depths; materials used as plugs (e.g., cast iron bridge plug, cement, cement retainer); method to set plugs; wait-on-cement times, if any; and any deviations from the approved plugging plan (if applicable).

For conversion to a non-injection well, include the following information: Depths of activity; type of activity; changes to injection well configuration, well casing, or cement behind casing; any plug added to the well and its depth; any newly drilled interval and its depth; depths of new perforations; and method(s) to demonstrate that the well has mechanical integrity (as applicable).

For all of the above activities, include a well sketch depicting the work, results of well tests/logging performed, service company tickets, and any other available information demonstrating how the work was/is to be performed. Also, specify whether depths are below ground surface, relative to Kelly bushing, etc.

CERTIFICATION: This form must be signed and dated by either: a responsible corporate officer for a corporation, by a general partner for a partnership, by the proprietor of a sole proprietorship, or by a principal executive or ranking elected official for a public agency.

PAPERWORK REDUCTION ACT NOTICE: The public reporting and recordkeeping burden for this collection of information is estimated to average between 6.0 and 7.9 hours per response, depending on the injection well class. Burden means the total time, effort, or financial resource expended by persons to generate, maintain, retain, or disclose or provide information to or for a Federal Agency. This includes the time needed to review instructions; develop, acquire, install, and utilize technology and systems for the purposes of collecting, validating, and verifying information, processing and maintaining information, and disclosing and providing information; adjust the existing ways to comply with any previously applicable instructions and requirements; train personnel to be able to respond to the collection of information; search data sources; complete and review the collection of information; and, transmit or otherwise disclose the information. An agency may not conduct or sponsor, and a person is not required to respond to, a collection of information unless it displays a currently valid OMB control number. Send comments on the Agency's need for this information, the accuracy of the provided burden estimates, and any suggested methods for minimizing respondent burden, including the use of automated collection techniques to Director, Collection Strategies Division, U.S. Environmental Protection Agency (2822), 1200 Pennsylvania Ave., NW., Washington, D.C. 20460. Include the OMB control number in any correspondence. Do not send the completed forms to this address.

AS-BUILT COREHOLE 327S

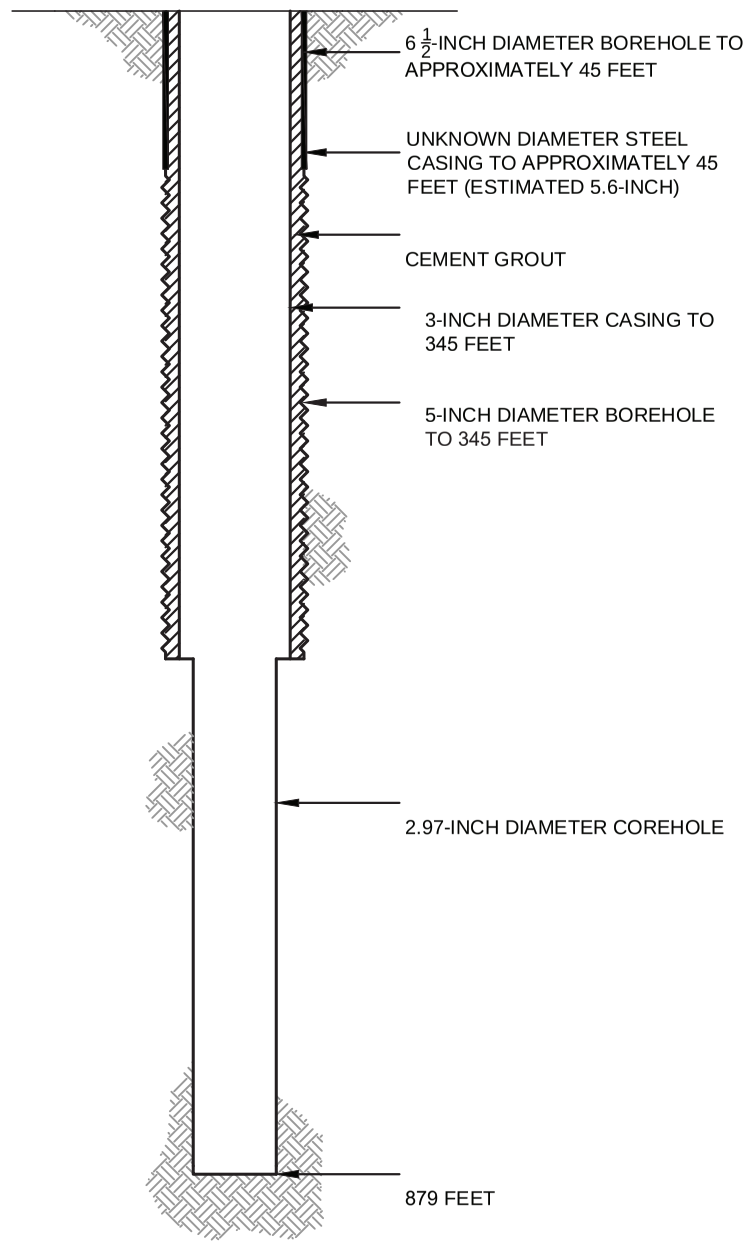

PROPOSED PLUGGING AND ABANDONMENT COREHOLE 327S

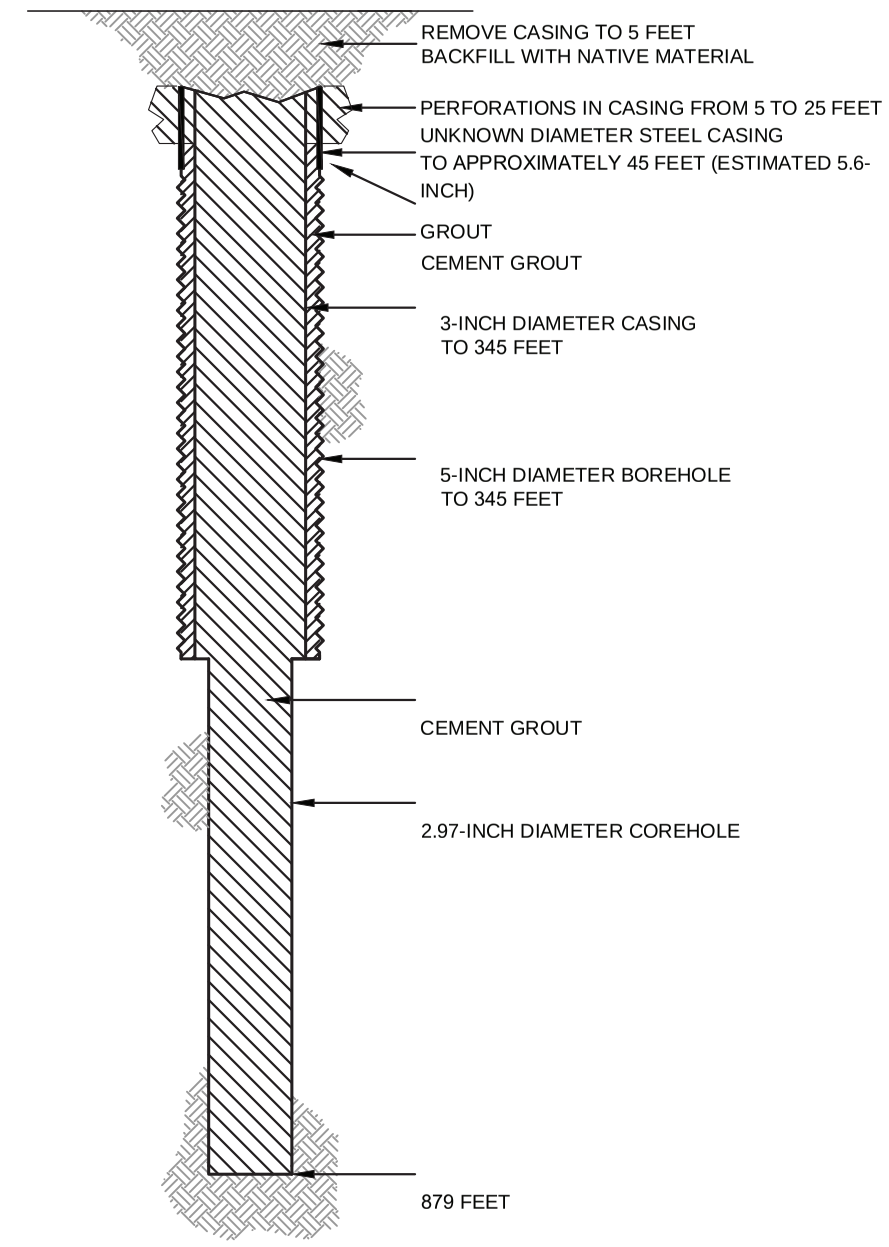

HALEY ALDRICH

FLORENCE COPPER, INC.
FLORENCE, ARIZONA

COREHOLE 327S DIAGRAM

FLORENCE COPPER INC.

NOT TO SCALE
SEPTEMBER 2019

FIGURE 1

MOBINI, GITA Printed: 4/21/2017 12:00 PM Layout: ABANDON (2)
G:\PROJECTS\CURIS RESOURCES\38706-CURIS FEASIBILITY\DRAWINGS\EPA\WELL ABANDON\415S_ABANDON.DWG

OMB No. 2040-0042 Approval Expires 4/30/2022

United States Environmental Protection Agency

WELL REWORK RECORD, PLUGGING AND ABANDONMENT PLAN, OR PLUGGING AND ABANDONMENT AFFIDAVIT

Name and Address, Phone Number and/or Email of Permittee

Florence Copper Project
1575 W Hunt Hwy,
Florence, AZ 85132

Permit or EPA ID Number	API Number	Full Well Name
R9UIC-AZ3-FY11-1		328S

State	County
Arizona	Pinal

Locate well in two directions from nearest lines of quarter section and drilling unit

Latitude 33.05151838

Longitude -111.4252516

Surface Location

NE **1/4 of** SE **1/4 of Section** 28 **Township** 4S **Range** 9E

_____ **ft. from (N/S)** _____ **Line of quarter section**

_____ **ft. from (E/W)** _____ **Line of quarter section.**

Well Class	Timing of Action (pick one)	Type of Action (pick one)
☐ Class I ☐ Class II ☑ Class III ☐ Class V	☑ Notice Prior to Work Date Expected to Commence March 2021 ☐ Report After Work Date Work Ended	☐ Well Rework ☑ Plugging and Abandonment ☐ Conversion to a Non-Injection Well

Provide a narrative description of the work planned to be performed, or that was performed. Use additional pages as necessary. See instructions.

A workover rig capable of performing the required abandonment operations at the required depths will be moved in and set up over the core hole. The core hole will be inspected to determine the depth to which the hole remains open and if any obstructions are present in the core hole; the presence and condition of any existing collar will also be documented. If necessary, the core hole will be cleaned out to a depth of at least 100 feet below the bedrock-LBFU contact to enable placement of cement seals.

If collar is present, an attempt will be made to remove it. If removal of the collar is not feasible, it will be left in the hole and perforated as needed to allow an annular seal to be placed to a depth of at least 25 feet bgs. In areas of agricultural use, the surface casing will be cut at least 5 feet bgs and removed.

If the collar cannot be removed, it will be perforated from at least 20 feet below the bedrock-LBFU contact to at least 20 feet above the contact; from at least 20 feet below the base of the MFGU to at least 20 feet above the top of the MFGU; and from at least 25 feet bgs to 5 feet bgs.

A tremie pipe will be used to place Type V cement in the open core hole from the bottom of the core hole to the top of the core hole. Cement retainers, as described above, will be used to force cement grout into the annulus and behind perforated intervals, as necessary.

If the hole has been obstructed, as much cement as possible will be placed from 100 feet below the LBFU-bedrock contact to the top of the core hole.

The volume of Type V cement will be recorded and will not be less than the estimated volume of material required to fill each interval. All cement grout will consist of Type V cement, or equivalent approved in accordance with the UIC Permit.

Certification

I certify under the penalty of law that I have personally examined and am familiar with the information submitted in this document and all attachments and that, based on my inquiry of those individuals immediately responsible for obtaining the information, I believe that the information is true, accurate, and complete. I am aware that there are significant penalties for submitting false information, including the possibliity of fine and imprisonment. (Ref. 40 CFR § 144.32)

Name and Official Title *(Please type or print)*	Signature	Date Signed
Dan Johnson, VP - General Manager		10/3/2019

INSTRUCTIONS FOR FORM 7520-19

This form replaces forms 7520-12 and 7520-14. Use this form only when work is planned or has occurred that affects the well's construction or operation as an injection well, including work on the casing, tubing or packer (or for shallow Class V wells, the subsurface fluid emplacement network). Use one form per injection well. While reports or other information developed by contractors or service companies may be attached, this form must be signed by a responsible entity as described at 40 CFR 144.32. Note: operators closing Class V wells should use Form 7520-17.

NAME, ADDRESS, PHONE AND/OR EMAIL OF PERMITTEE: Enter the name and street address, city/town, state, and ZIP code of the permittee. Also provide an email address (if available) and/or a phone number.

PERMIT OR EPA ID NUMBER: Enter the well identification number or permit number assigned to the well by the EPA or the permitting authority.

API NUMBER: Enter the number assigned by the local jurisdiction (usually a State Oil and Gas Agency) using the American Petroleum Institute standard numbering system.

FULL WELL NAME: Enter the full name of the well or project.

Enter the **STATE** and **COUNTY** where the well is located. For States that do not have counties, use the name of that State's equivalent jurisdiction at a more local level.

WELL LOCATION: Fill in the complete township, range, and section to the nearest quarter-quarter section. A township is north or south of the baseline, and a range is east or west of the principal meridian (e.g., T12N, R34W). Also include the distance, in feet, from the nearest north or south line and nearest east or west line of the quarter-section. Also, enter the **latitude** and **longitude** of the well in decimal degrees, to five or six places if possible; be sure to include a negative sign for the longitude of a well in the Western Hemisphere and a negative sign for the latitude of a well in the Southern Hemisphere.

Enter the **WELL CLASS,** i.e., the class of injection well as defined in 40 CFR 144.6.

TIMING OF THE ACTION: Check ***Notice prior to work*** if the activity has not yet occurred (i.e., is planned). Check ***Report after work*** if the activity described has already occurred. As appropriate, include the date the activity is expected to start or the date the activity was completed. (Note this may not be available, e.g., for a plugging plan submitted with a permit application.)

TYPE OF ACTION: Check the appropriate box to describe the kind of activity being reported. Check ***Well Rework*** for work that was/will be performed on the well after it has already been in operation as an injection well. Check ***Plugging and Abandonment*** to report on plans for or descriptions of final closure/plugging after use as an injection well. Check ***Conversion to a Non-Injection Well*** if the well is to be converted to something other than an injection well.

Provide a **NARRATIVE DESCRIPTION** of the work planned to be performed, or that was performed. The narrative should include a description of the main procedures planned or that occurred during the work activity. A service company report, daily report, or similar document may be attached if it includes all the requested information and is clear and legible.

For well reworks, include the following information: The reason for the well rework; depths of activity; type of activity; changes to injection well configuration, well casing, or cement behind casing; any plug added to the well and its depth; any newly drilled interval and its depth; method(s) to demonstrate that the well has mechanical integrity (as applicable); and any deviations from the approved rework plan (as applicable).

For a well plugging plan, include the following information: Reason for the well plugging; number of plugs placed, and their depths; materials used as plugs (e.g., cast iron bridge plug, cement, cement retainer); method to set plugs; and wait-on-cement times, if any. Also provide one or more cost estimates from an independent firm in the business of plugging and abandoning wells to plug the well as described in the plan.

For well plugging affidavit, include the following information: Reason for the well plugging; number of plugs placed, and their depths; materials used as plugs (e.g., cast iron bridge plug, cement, cement retainer); method to set plugs; wait-on-cement times, if any; and any deviations from the approved plugging plan (if applicable).

For conversion to a non-injection well, include the following information: Depths of activity; type of activity; changes to injection well configuration, well casing, or cement behind casing; any plug added to the well and its depth; any newly drilled interval and its depth; depths of new perforations; and method(s) to demonstrate that the well has mechanical integrity (as applicable).

For all of the above activities, include a well sketch depicting the work, results of well tests/logging performed, service company tickets, and any other available information demonstrating how the work was/is to be performed. Also, specify whether depths are below ground surface, relative to Kelly bushing, etc.

CERTIFICATION: This form must be signed and dated by either: a responsible corporate officer for a corporation, by a general partner for a partnership, by the proprietor of a sole proprietorship, or by a principal executive or ranking elected official for a public agency.

PAPERWORK REDUCTION ACT NOTICE: The public reporting and recordkeeping burden for this collection of information is estimated to average between 6.0 and 7.9 hours per response, depending on the injection well class. Burden means the total time, effort, or financial resource expended by persons to generate, maintain, retain, or disclose or provide information to or for a Federal Agency. This includes the time needed to review instructions; develop, acquire, install, and utilize technology and systems for the purposes of collecting, validating, and verifying information, processing and maintaining information, and disclosing and providing information; adjust the existing ways to comply with any previously applicable instructions and requirements; train personnel to be able to respond to the collection of information; search data sources; complete and review the collection of information; and, transmit or otherwise disclose the information. An agency may not conduct or sponsor, and a person is not required to respond to, a collection of information unless it displays a currently valid OMB control number. Send comments on the Agency's need for this information, the accuracy of the provided burden estimates, and any suggested methods for minimizing respondent burden, including the use of automated collection techniques to Director, Collection Strategies Division, U.S. Environmental Protection Agency (2822), 1200 Pennsylvania Ave., NW., Washington, D.C. 20460. Include the OMB control number in any correspondence. Do not send the completed forms to this address.

AS-BUILT COREHOLE 328S

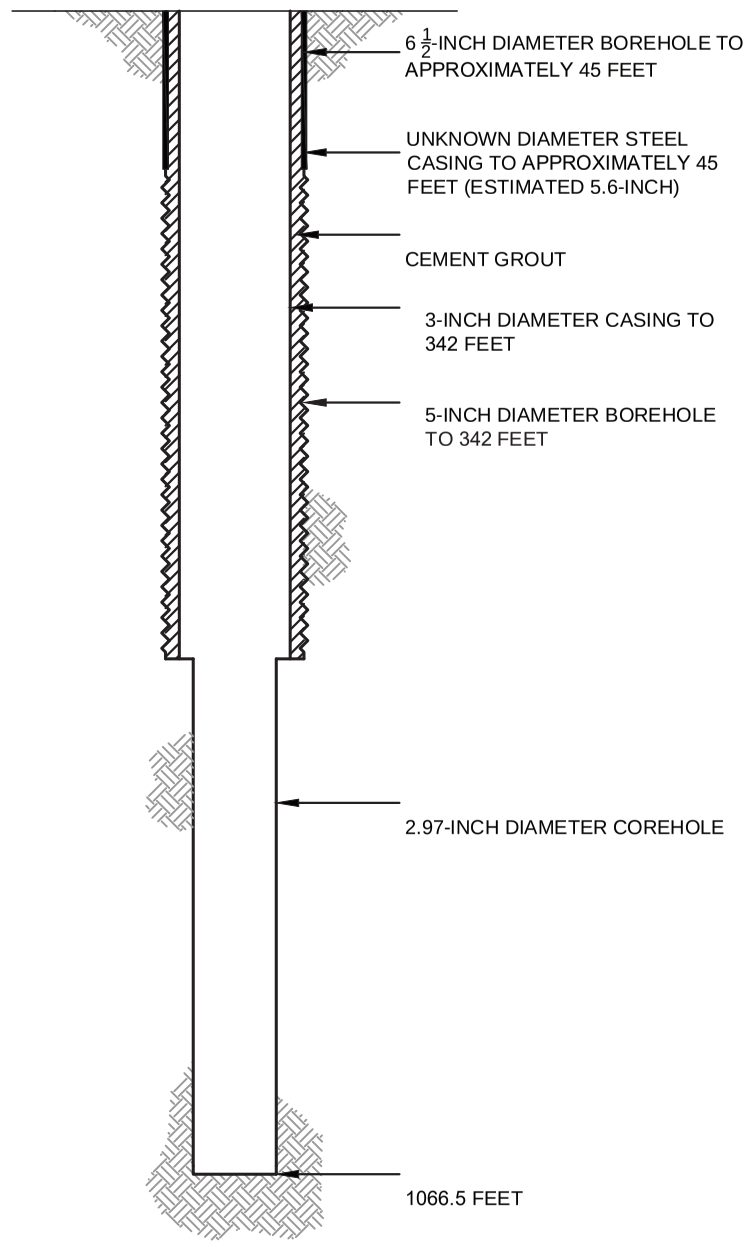

PROPOSED PLUGGING AND ABANDONMENT COREHOLE 328S

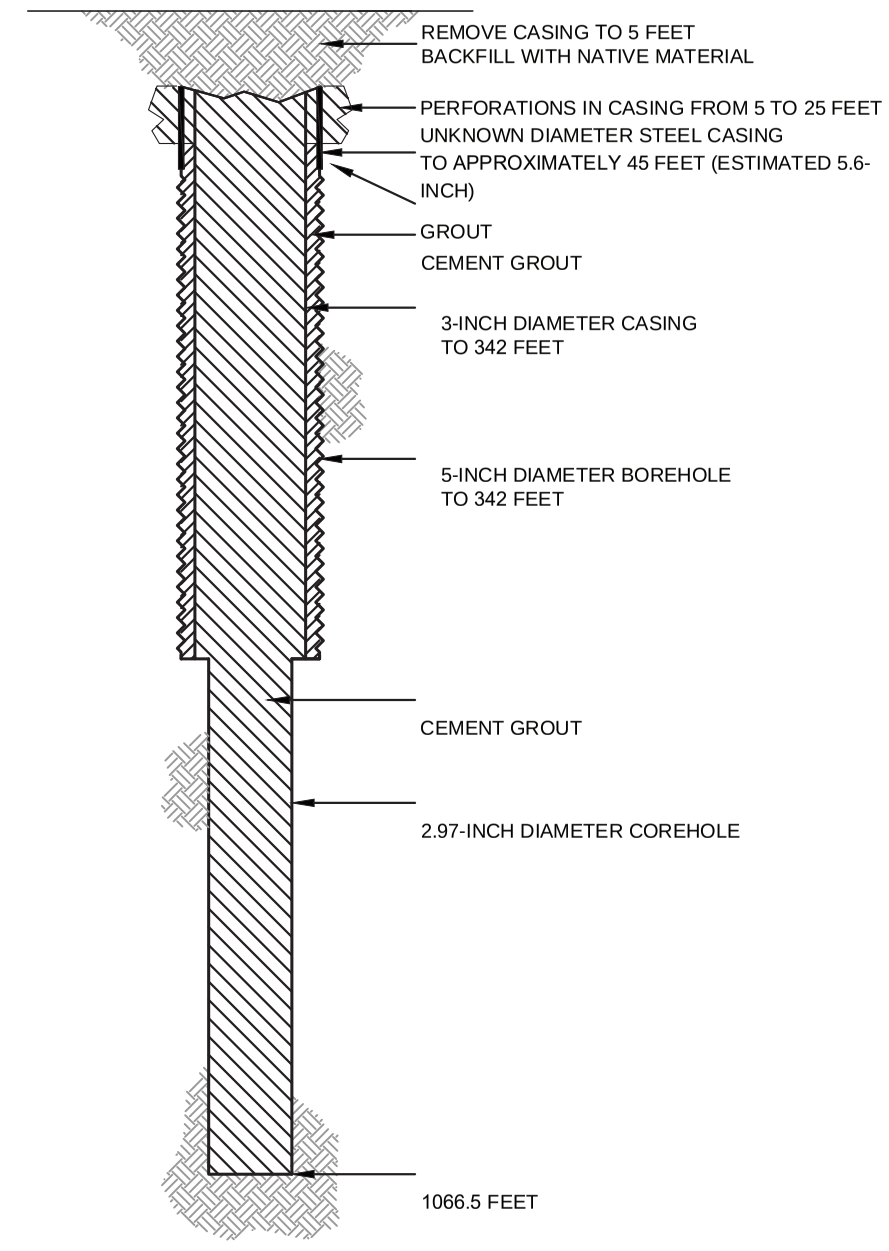

HALEY ALDRICH

FLORENCE COPPER, INC.
FLORENCE, ARIZONA

COREHOLE 328S DIAGRAM

FLORENCE COPPER INC.

NOT TO SCALE
SEPTEMBER 2019

FIGURE 1

MOBINI, GITA Printed: 4/21/2017 12:00 PM Layout: ABANDON (2)
G:\PROJECTS\CURIS RESOURCES\38706-CURIS FEASIBILITY\DRAWINGS\EPA\WELL ABANDON\415S_ABANDON.DWG

OMB No. 2040-0042 Approval Expires 4/30/2022

United States Environmental Protection Agency

EPA

WELL REWORK RECORD, PLUGGING AND ABANDONMENT PLAN, OR PLUGGING AND ABANDONMENT AFFIDAVIT

Name and Address, Phone Number and/or Email of Permittee

Florence Copper Project
1575 W Hunt Hwy,
Florence, AZ 85132

Permit or EPA ID Number	API Number	Full Well Name
R9UIC-AZ3-FY11-1		329S

State	County
Arizona	Pinal

Locate well in two directions from nearest lines of quarter section and drilling unit

Latitude 33.05092492

Longitude -111.4256629

Surface Location

NW **1/4 of** SE **1/4 of Section** 28 **Township** 4S **Range** 9E

_____ **ft. from (N/S)** _____ **Line of quarter section**

_____ **ft. from (E/W)** _____ **Line of quarter section.**

Well Class	Timing of Action (pick one)	Type of Action (pick one)
☐ Class I ☐ Class II ☑ Class III ☐ Class V	☑ Notice Prior to Work Date Expected to Commence March 2021 ☐ Report After Work Date Work Ended	☐ Well Rework ☑ Plugging and Abandonment ☐ Conversion to a Non-Injection Well

Provide a narrative description of the work planned to be performed, or that was performed. Use additional pages as necessary. See instructions.

A workover rig capable of performing the required abandonment operations at the required depths will be moved in and set up over the core hole. The core hole will be inspected to determine the depth to which the hole remains open and if any obstructions are present in the core hole; the presence and condition of any existing collar will also be documented. If necessary, the core hole will be cleaned out to a depth of at least 100 feet below the bedrock-LBFU contact to enable placement of cement seals.

If collar is present, an attempt will be made to remove it. If removal of the collar is not feasible, it will be left in the hole and perforated as needed to allow an annular seal to be placed to a depth of at least 25 feet bgs. In areas of agricultural use, the surface casing will be cut at least 5 feet bgs and removed.

If the collar cannot be removed, it will be perforated from at least 20 feet below the bedrock-LBFU contact to at least 20 feet above the contact; from at least 20 feet below the base of the MFGU to at least 20 feet above the top of the MFGU; and from at least 25 feet bgs to 5 feet bgs.

A tremie pipe will be used to place Type V cement in the open core hole from the bottom of the core hole to the top of the core hole. Cement retainers, as described above, will be used to force cement grout into the annulus and behind perforated intervals, as necessary.

If the hole has been obstructed, as much cement as possible will be placed from 100 feet below the LBFU-bedrock contact to the top of the core hole.

The volume of Type V cement will be recorded and will not be less than the estimated volume of material required to fill each interval. All cement grout will consist of Type V cement, or equivalent approved in accordance with the UIC Permit.

Certification

I certify under the penalty of law that I have personally examined and am familiar with the information submitted in this document and all attachments and that, based on my inquiry of those individuals immediately responsible for obtaining the information, I believe that the information is true, accurate, and complete. I am aware that there are significant penalties for submitting false information, including the possibliity of fine and imprisonment. (Ref. 40 CFR § 144.32)

Name and Official Title *(Please type or print)*	Signature	Date Signed
Dan Johnson, VP - General Manager		10/3/2019

INSTRUCTIONS FOR FORM 7520-19

This form replaces forms 7520-12 and 7520-14. Use this form only when work is planned or has occurred that affects the well's construction or operation as an injection well, including work on the casing, tubing or packer (or for shallow Class V wells, the subsurface fluid emplacement network). Use one form per injection well. While reports or other information developed by contractors or service companies may be attached, this form must be signed by a responsible entity as described at 40 CFR 144.32. Note: operators closing Class V wells should use Form 7520-17.

NAME, ADDRESS, PHONE AND/OR EMAIL OF PERMITTEE: Enter the name and street address, city/town, state, and ZIP code of the permittee. Also provide an email address (if available) and/or a phone number.

PERMIT OR EPA ID NUMBER: Enter the well identification number or permit number assigned to the well by the EPA or the permitting authority.

API NUMBER: Enter the number assigned by the local jurisdiction (usually a State Oil and Gas Agency) using the American Petroleum Institute standard numbering system.

FULL WELL NAME: Enter the full name of the well or project.

Enter the **STATE** and **COUNTY** where the well is located. For States that do not have counties, use the name of that State's equivalent jurisdiction at a more local level.

WELL LOCATION: Fill in the complete township, range, and section to the nearest quarter-quarter section. A township is north or south of the baseline, and a range is east or west of the principal meridian (e.g., T12N, R34W). Also include the distance, in feet, from the nearest north or south line and nearest east or west line of the quarter-section. Also, enter the **latitude** and **longitude** of the well in decimal degrees, to five or six places if possible; be sure to include a negative sign for the longitude of a well in the Western Hemisphere and a negative sign for the latitude of a well in the Southern Hemisphere.

Enter the **WELL CLASS,** i.e., the class of injection well as defined in 40 CFR 144.6.

TIMING OF THE ACTION: Check ***Notice prior to work*** if the activity has not yet occurred (i.e., is planned). Check ***Report after work*** if the activity described has already occurred. As appropriate, include the date the activity is expected to start or the date the activity was completed. (Note this may not be available, e.g., for a plugging plan submitted with a permit application.)

TYPE OF ACTION: Check the appropriate box to describe the kind of activity being reported. Check ***Well Rework*** for work that was/will be performed on the well after it has already been in operation as an injection well. Check ***Plugging and Abandonment*** to report on plans for or descriptions of final closure/plugging after use as an injection well. Check ***Conversion to a Non-Injection Well*** if the well is to be converted to something other than an injection well.

Provide a **NARRATIVE DESCRIPTION** of the work planned to be performed, or that was performed. The narrative should include a description of the main procedures planned or that occurred during the work activity. A service company report, daily report, or similar document may be attached if it includes all the requested information and is clear and legible.

For well reworks, include the following information: The reason for the well rework; depths of activity; type of activity; changes to injection well configuration, well casing, or cement behind casing; any plug added to the well and its depth; any newly drilled interval and its depth; method(s) to demonstrate that the well has mechanical integrity (as applicable); and any deviations from the approved rework plan (as applicable).

For a well plugging plan, include the following information: Reason for the well plugging; number of plugs placed, and their depths; materials used as plugs (e.g., cast iron bridge plug, cement, cement retainer); method to set plugs; and wait-on-cement times, if any. Also provide one or more cost estimates from an independent firm in the business of plugging and abandoning wells to plug the well as described in the plan.

For well plugging affidavit, include the following information: Reason for the well plugging; number of plugs placed, and their depths; materials used as plugs (e.g., cast iron bridge plug, cement, cement retainer); method to set plugs; wait-on-cement times, if any; and any deviations from the approved plugging plan (if applicable).

For conversion to a non-injection well, include the following information: Depths of activity; type of activity; changes to injection well configuration, well casing, or cement behind casing; any plug added to the well and its depth; any newly drilled interval and its depth; depths of new perforations; and method(s) to demonstrate that the well has mechanical integrity (as applicable).

For all of the above activities, include a well sketch depicting the work, results of well tests/logging performed, service company tickets, and any other available information demonstrating how the work was/is to be performed. Also, specify whether depths are below ground surface, relative to Kelly bushing, etc.

CERTIFICATION: This form must be signed and dated by either: a responsible corporate officer for a corporation, by a general partner for a partnership, by the proprietor of a sole proprietorship, or by a principal executive or ranking elected official for a public agency.

PAPERWORK REDUCTION ACT NOTICE: The public reporting and recordkeeping burden for this collection of information is estimated to average between 6.0 and 7.9 hours per response, depending on the injection well class. Burden means the total time, effort, or financial resource expended by persons to generate, maintain, retain, or disclose or provide information to or for a Federal Agency. This includes the time needed to review instructions; develop, acquire, install, and utilize technology and systems for the purposes of collecting, validating, and verifying information, processing and maintaining information, and disclosing and providing information; adjust the existing ways to comply with any previously applicable instructions and requirements; train personnel to be able to respond to the collection of information; search data sources; complete and review the collection of information; and, transmit or otherwise disclose the information. An agency may not conduct or sponsor, and a person is not required to respond to, a collection of information unless it displays a currently valid OMB control number. Send comments on the Agency's need for this information, the accuracy of the provided burden estimates, and any suggested methods for minimizing respondent burden, including the use of automated collection techniques to Director, Collection Strategies Division, U.S. Environmental Protection Agency (2822), 1200 Pennsylvania Ave., NW., Washington, D.C. 20460. Include the OMB control number in any correspondence. Do not send the completed forms to this address.

AS-BUILT COREHOLE 329S

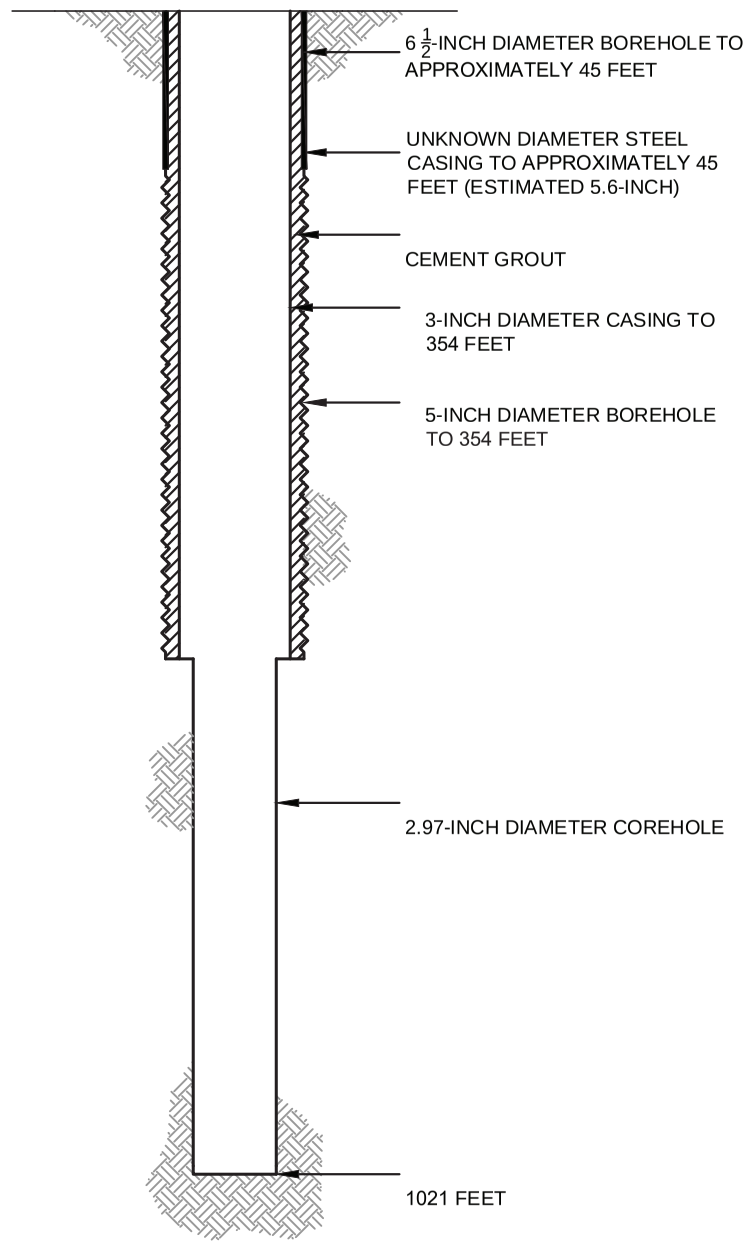

PROPOSED PLUGGING AND ABANDONMENT COREHOLE 329S

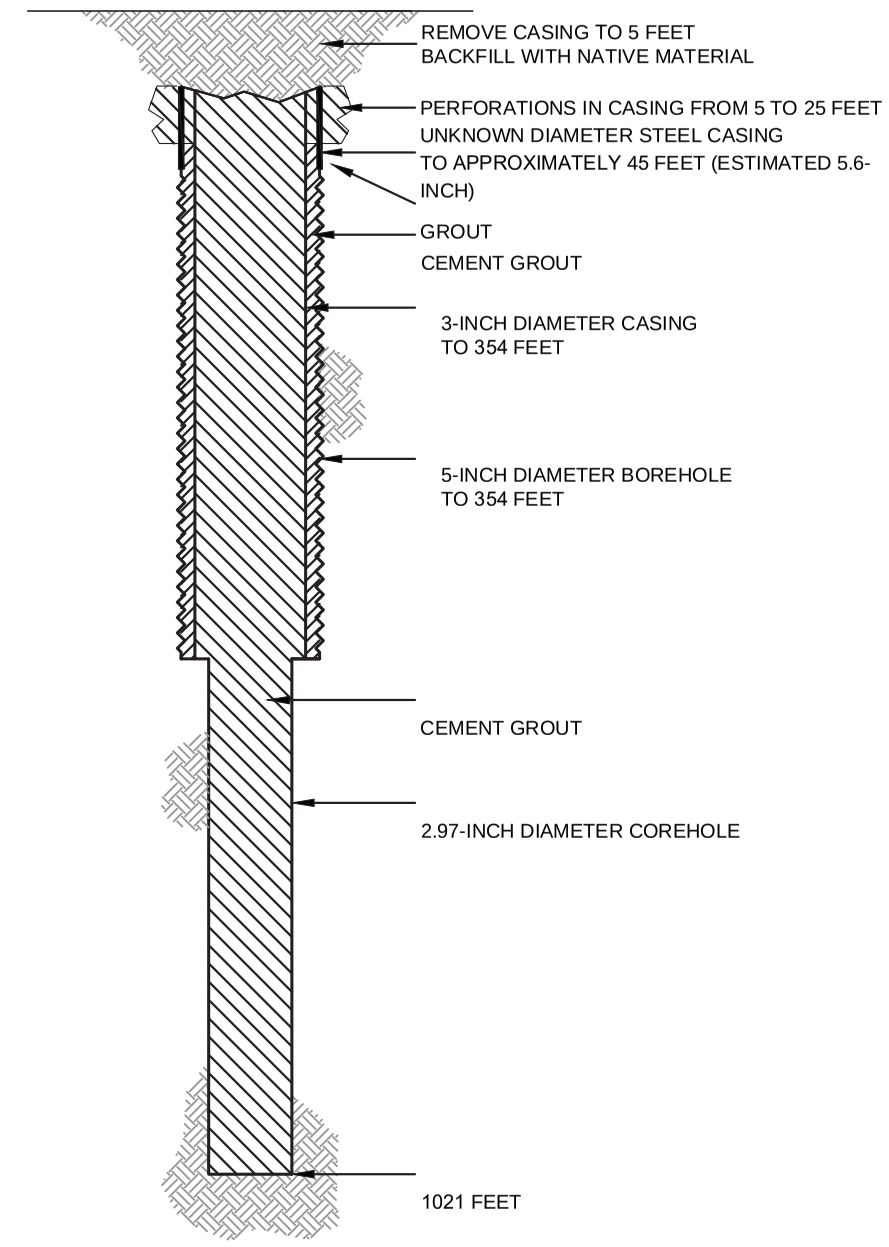

HALEY ALDRICH

FLORENCE COPPER, INC.
FLORENCE, ARIZONA

COREHOLE 329S DIAGRAM

FLORENCE COPPER INC.

NOT TO SCALE
SEPTEMBER 2019

FIGURE 1

MOBINI, GITA Printed: 4/21/2017 12:00 PM Layout: ABANDON (2)
G:\PROJECTS\CURIS RESOURCES\38706-CURIS FEASIBILITY\DRAWINGS\EPA\WELL ABANDON\415S_ABANDON.DWG

OMB No. 2040-0042 Approval Expires 4/30/2022

United States Environmental Protection Agency

WELL REWORK RECORD, PLUGGING AND ABANDONMENT PLAN, OR PLUGGING AND ABANDONMENT AFFIDAVIT

Name and Address, Phone Number and/or Email of Permittee

Florence Copper Project
1575 W Hunt Hwy,
Florence, AZ 85132

Permit or EPA ID Number	API Number	Full Well Name
R9UIC-AZ3-FY11-1		330S

State	County
Arizona	Pinal

Locate well in two directions from nearest lines of quarter section and drilling unit

Latitude 33.05036633

Longitude -111.4252264

Surface Location

NE **1/4 of** SE **1/4 of Section** 28 **Township** 4S **Range** 9E

_____ **ft. from (N/S)** _____ **Line of quarter section**

_____ **ft. from (E/W)** _____ **Line of quarter section.**

Well Class	Timing of Action (pick one)	Type of Action (pick one)
☐ Class I ☐ Class II ☑ Class III ☐ Class V	☑ Notice Prior to Work Date Expected to Commence March 2021 ☐ Report After Work Date Work Ended	☐ Well Rework ☑ Plugging and Abandonment ☐ Conversion to a Non-Injection Well

Provide a narrative description of the work planned to be performed, or that was performed. Use additional pages as necessary. See instructions.

A workover rig capable of performing the required abandonment operations at the required depths will be moved in and set up over the core hole. The core hole will be inspected to determine the depth to which the hole remains open and if any obstructions are present in the core hole; the presence and condition of any existing collar will also be documented. If necessary, the core hole will be cleaned out to a depth of at least 100 feet below the bedrock-LBFU contact to enable placement of cement seals.

If collar is present, an attempt will be made to remove it. If removal of the collar is not feasible, it will be left in the hole and perforated as needed to allow an annular seal to be placed to a depth of at least 25 feet bgs. In areas of agricultural use, the surface casing will be cut at least 5 feet bgs and removed.

If the collar cannot be removed, it will be perforated from at least 20 feet below the bedrock-LBFU contact to at least 20 feet above the contact; from at least 20 feet below the base of the MFGU to at least 20 feet above the top of the MFGU; and from at least 25 feet bgs to 5 feet bgs.

A tremie pipe will be used to place Type V cement in the open core hole from the bottom of the core hole to the top of the core hole. Cement retainers, as described above, will be used to force cement grout into the annulus and behind perforated intervals, as necessary.

If the hole has been obstructed, as much cement as possible will be placed from 100 feet below the LBFU-bedrock contact to the top of the core hole.

The volume of Type V cement will be recorded and will not be less than the estimated volume of material required to fill each interval. All cement grout will consist of Type V cement, or equivalent approved in accordance with the UIC Permit.

Certification

I certify under the penalty of law that I have personally examined and am familiar with the information submitted in this document and all attachments and that, based on my inquiry of those individuals immediately responsible for obtaining the information, I believe that the information is true, accurate, and complete. I am aware that there are significant penalties for submitting false information, including the possibliity of fine and imprisonment. (Ref. 40 CFR § 144.32)

Name and Official Title *(Please type or print)*	Signature	Date Signed
Dan Johnson, VP - General Manager		10/3/2019

INSTRUCTIONS FOR FORM 7520-19

This form replaces forms 7520-12 and 7520-14. Use this form only when work is planned or has occurred that affects the well's construction or operation as an injection well, including work on the casing, tubing or packer (or for shallow Class V wells, the subsurface fluid emplacement network). Use one form per injection well. While reports or other information developed by contractors or service companies may be attached, this form must be signed by a responsible entity as described at 40 CFR 144.32. Note: operators closing Class V wells should use Form 7520-17.

NAME, ADDRESS, PHONE AND/OR EMAIL OF PERMITTEE: Enter the name and street address, city/town, state, and ZIP code of the permittee. Also provide an email address (if available) and/or a phone number.

PERMIT OR EPA ID NUMBER: Enter the well identification number or permit number assigned to the well by the EPA or the permitting authority.

API NUMBER: Enter the number assigned by the local jurisdiction (usually a State Oil and Gas Agency) using the American Petroleum Institute standard numbering system.

FULL WELL NAME: Enter the full name of the well or project.

Enter the **STATE** and **COUNTY** where the well is located. For States that do not have counties, use the name of that State's equivalent jurisdiction at a more local level.

WELL LOCATION: Fill in the complete township, range, and section to the nearest quarter-quarter section. A township is north or south of the baseline, and a range is east or west of the principal meridian (e.g., T12N, R34W). Also include the distance, in feet, from the nearest north or south line and nearest east or west line of the quarter-section. Also, enter the **latitude** and **longitude** of the well in decimal degrees, to five or six places if possible; be sure to include a negative sign for the longitude of a well in the Western Hemisphere and a negative sign for the latitude of a well in the Southern Hemisphere.

Enter the **WELL CLASS,** i.e., the class of injection well as defined in 40 CFR 144.6.

TIMING OF THE ACTION: Check ***Notice prior to work*** if the activity has not yet occurred (i.e., is planned). Check ***Report after work*** if the activity described has already occurred. As appropriate, include the date the activity is expected to start or the date the activity was completed. (Note this may not be available, e.g., for a plugging plan submitted with a permit application.)

TYPE OF ACTION: Check the appropriate box to describe the kind of activity being reported. Check ***Well Rework*** for work that was/will be performed on the well after it has already been in operation as an injection well. Check ***Plugging and Abandonment*** to report on plans for or descriptions of final closure/plugging after use as an injection well. Check ***Conversion to a Non-Injection Well*** if the well is to be converted to something other than an injection well.

Provide a **NARRATIVE DESCRIPTION** of the work planned to be performed, or that was performed. The narrative should include a description of the main procedures planned or that occurred during the work activity. A service company report, daily report, or similar document may be attached if it includes all the requested information and is clear and legible.

For well reworks, include the following information: The reason for the well rework; depths of activity; type of activity; changes to injection well configuration, well casing, or cement behind casing; any plug added to the well and its depth; any newly drilled interval and its depth; method(s) to demonstrate that the well has mechanical integrity (as applicable); and any deviations from the approved rework plan (as applicable).

For a well plugging plan, include the following information: Reason for the well plugging; number of plugs placed, and their depths; materials used as plugs (e.g., cast iron bridge plug, cement, cement retainer); method to set plugs; and wait-on-cement times, if any. Also provide one or more cost estimates from an independent firm in the business of plugging and abandoning wells to plug the well as described in the plan.

For well plugging affidavit, include the following information: Reason for the well plugging; number of plugs placed, and their depths; materials used as plugs (e.g., cast iron bridge plug, cement, cement retainer); method to set plugs; wait-on-cement times, if any; and any deviations from the approved plugging plan (if applicable).

For conversion to a non-injection well, include the following information: Depths of activity; type of activity; changes to injection well configuration, well casing, or cement behind casing; any plug added to the well and its depth; any newly drilled interval and its depth; depths of new perforations; and method(s) to demonstrate that the well has mechanical integrity (as applicable).

For all of the above activities, include a well sketch depicting the work, results of well tests/logging performed, service company tickets, and any other available information demonstrating how the work was/is to be performed. Also, specify whether depths are below ground surface, relative to Kelly bushing, etc.

CERTIFICATION: This form must be signed and dated by either: a responsible corporate officer for a corporation, by a general partner for a partnership, by the proprietor of a sole proprietorship, or by a principal executive or ranking elected official for a public agency.

PAPERWORK REDUCTION ACT NOTICE: The public reporting and recordkeeping burden for this collection of information is estimated to average between 6.0 and 7.9 hours per response, depending on the injection well class. Burden means the total time, effort, or financial resource expended by persons to generate, maintain, retain, or disclose or provide information to or for a Federal Agency. This includes the time needed to review instructions; develop, acquire, install, and utilize technology and systems for the purposes of collecting, validating, and verifying information, processing and maintaining information, and disclosing and providing information; adjust the existing ways to comply with any previously applicable instructions and requirements; train personnel to be able to respond to the collection of information; search data sources; complete and review the collection of information; and, transmit or otherwise disclose the information. An agency may not conduct or sponsor, and a person is not required to respond to, a collection of information unless it displays a currently valid OMB control number. Send comments on the Agency's need for this information, the accuracy of the provided burden estimates, and any suggested methods for minimizing respondent burden, including the use of automated collection techniques to Director, Collection Strategies Division, U.S. Environmental Protection Agency (2822), 1200 Pennsylvania Ave., NW., Washington, D.C. 20460. Include the OMB control number in any correspondence. Do not send the completed forms to this address.

AS-BUILT COREHOLE 330S

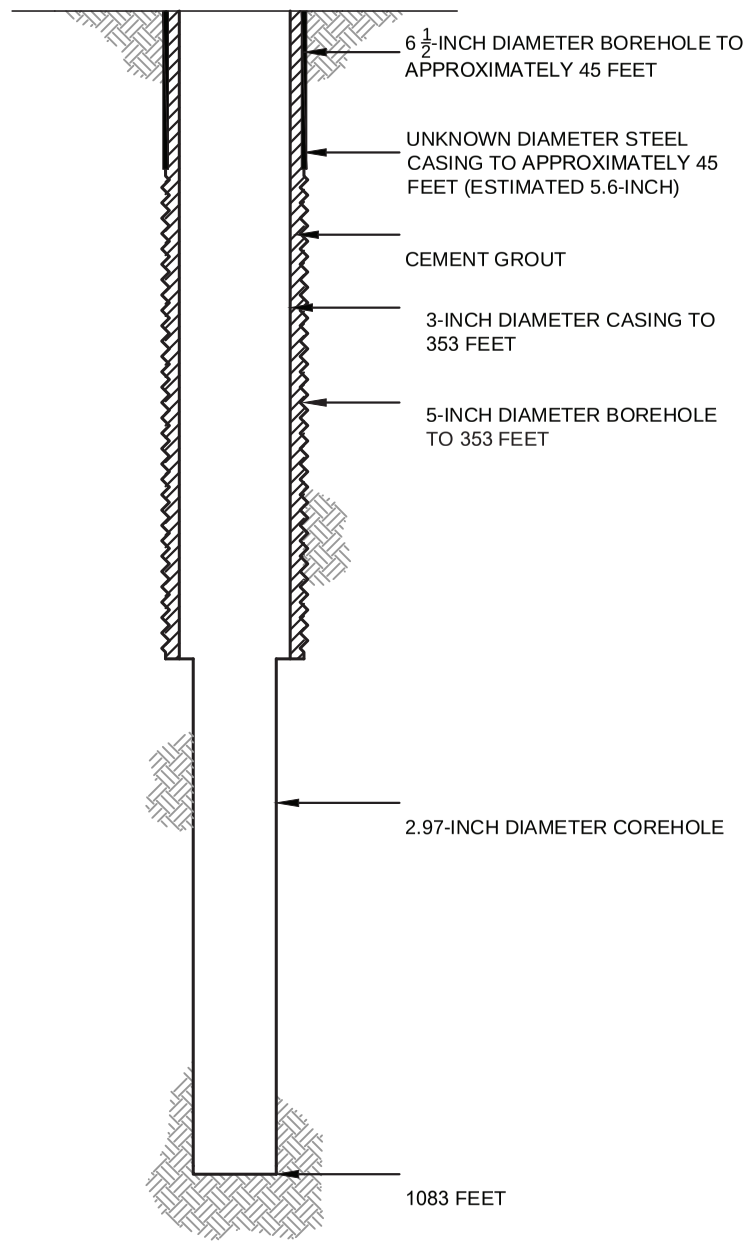

PROPOSED PLUGGING AND ABANDONMENT COREHOLE 330S

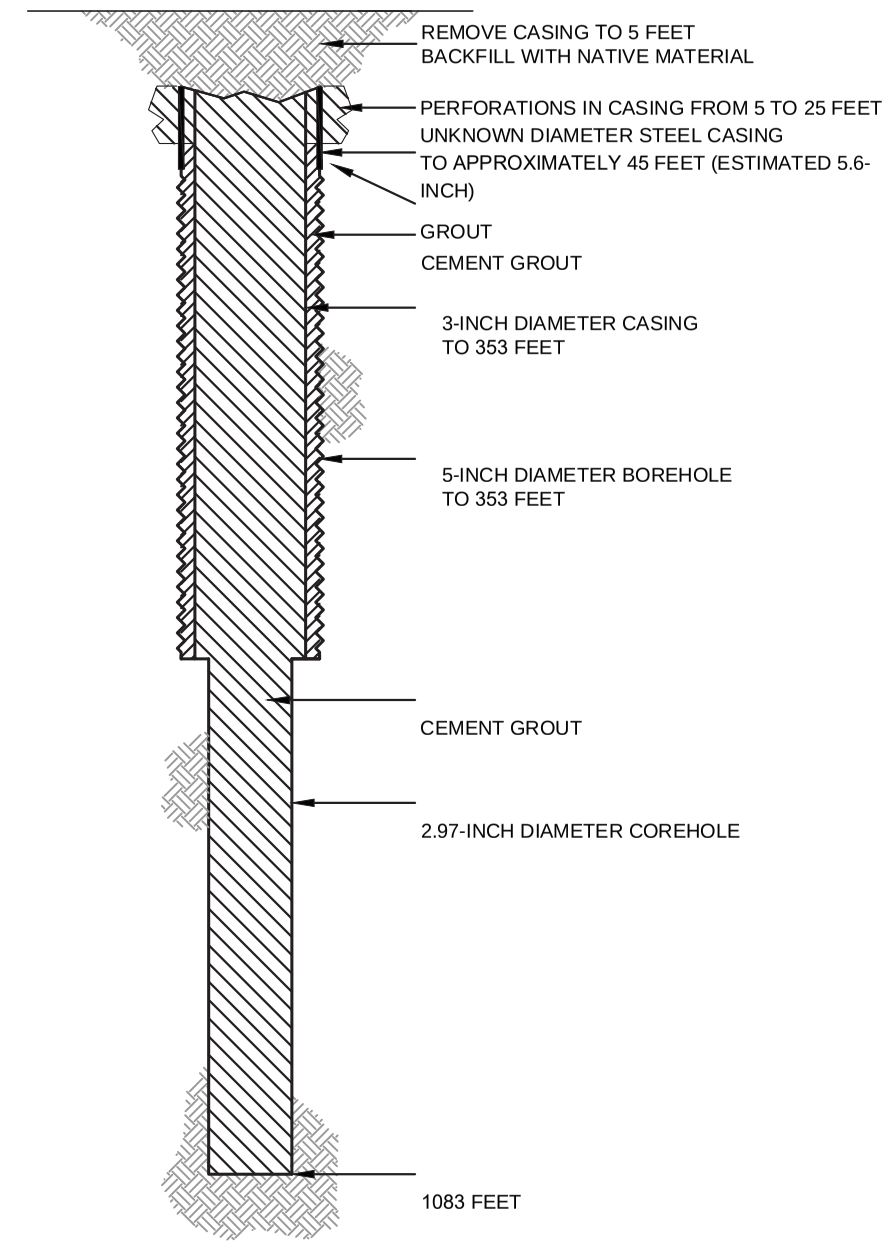

HALEY ALDRICH

FLORENCE COPPER, INC.
FLORENCE, ARIZONA

COREHOLE 330S DIAGRAM

FLORENCE COPPER INC.

NOT TO SCALE
SEPTEMBER 2019

FIGURE 1

MOBINI, GITA Printed: 4/21/2017 12:00 PM Layout: ABANDON (2)
G:\PROJECTS\CURIS RESOURCES\38706-CURIS FEASIBILITY\DRAWINGS\EPA\WELL ABANDON\415S_ABANDON.DWG

OMB No. 2040-0042 Approval Expires 4/30/2022

United States Environmental Protection Agency

WELL REWORK RECORD, PLUGGING AND ABANDONMENT PLAN, OR PLUGGING AND ABANDONMENT AFFIDAVIT

Name and Address, Phone Number and/or Email of Permittee

Florence Copper Project
1575 W Hunt Hwy,
Florence, AZ 85132

Permit or EPA ID Number	API Number	Full Well Name
R9UIC-AZ3-FY11-1		331S

State	County
Arizona	Pinal

Locate well in two directions from nearest lines of quarter section and drilling unit

Latitude 33.05031859

Longitude -111.4228106

Surface Location

NE **1/4 of** SE **1/4 of Section** 28 **Township** 4S **Range** 9E

_____ **ft. from (N/S)** _____ **Line of quarter section**

_____ **ft. from (E/W)** _____ **Line of quarter section.**

Well Class	Timing of Action (pick one)	Type of Action (pick one)
☐ Class I ☐ Class II ☑ Class III ☐ Class V	☑ Notice Prior to Work Date Expected to Commence March 2021 ☐ Report After Work Date Work Ended	☐ Well Rework ☑ Plugging and Abandonment ☐ Conversion to a Non-Injection Well

Provide a narrative description of the work planned to be performed, or that was performed. Use additional pages as necessary. See instructions.

A workover rig capable of performing the required abandonment operations at the required depths will be moved in and set up over the core hole. The core hole will be inspected to determine the depth to which the hole remains open and if any obstructions are present in the core hole; the presence and condition of any existing collar will also be documented. If necessary, the core hole will be cleaned out to a depth of at least 100 feet below the bedrock-LBFU contact to enable placement of cement seals.

If collar is present, an attempt will be made to remove it. If removal of the collar is not feasible, it will be left in the hole and perforated as needed to allow an annular seal to be placed to a depth of at least 25 feet bgs. In areas of agricultural use, the surface casing will be cut at least 5 feet bgs and removed.

If the collar cannot be removed, it will be perforated from at least 20 feet below the bedrock-LBFU contact to at least 20 feet above the contact; from at least 20 feet below the base of the MFGU to at least 20 feet above the top of the MFGU; and from at least 25 feet bgs to 5 feet bgs.

A tremie pipe will be used to place Type V cement in the open core hole from the bottom of the core hole to the top of the core hole. Cement retainers, as described above, will be used to force cement grout into the annulus and behind perforated intervals, as necessary.

If the hole has been obstructed, as much cement as possible will be placed from 100 feet below the LBFU-bedrock contact to the top of the core hole.

The volume of Type V cement will be recorded and will not be less than the estimated volume of material required to fill each interval. All cement grout will consist of Type V cement, or equivalent approved in accordance with the UIC Permit.

Certification

I certify under the penalty of law that I have personally examined and am familiar with the information submitted in this document and all attachments and that, based on my inquiry of those individuals immediately responsible for obtaining the information, I believe that the information is true, accurate, and complete. I am aware that there are significant penalties for submitting false information, including the possibliity of fine and imprisonment. (Ref. 40 CFR § 144.32)

Name and Official Title *(Please type or print)*	Signature	Date Signed
Dan Johnson, VP - General Manager		10/3/2019

INSTRUCTIONS FOR FORM 7520-19

This form replaces forms 7520-12 and 7520-14. Use this form only when work is planned or has occurred that affects the well's construction or operation as an injection well, including work on the casing, tubing or packer (or for shallow Class V wells, the subsurface fluid emplacement network). Use one form per injection well. While reports or other information developed by contractors or service companies may be attached, this form must be signed by a responsible entity as described at 40 CFR 144.32. Note: operators closing Class V wells should use Form 7520-17.

NAME, ADDRESS, PHONE AND/OR EMAIL OF PERMITTEE: Enter the name and street address, city/town, state, and ZIP code of the permittee. Also provide an email address (if available) and/or a phone number.

PERMIT OR EPA ID NUMBER: Enter the well identification number or permit number assigned to the well by the EPA or the permitting authority.

API NUMBER: Enter the number assigned by the local jurisdiction (usually a State Oil and Gas Agency) using the American Petroleum Institute standard numbering system.

FULL WELL NAME: Enter the full name of the well or project.

Enter the **STATE** and **COUNTY** where the well is located. For States that do not have counties, use the name of that State's equivalent jurisdiction at a more local level.

WELL LOCATION: Fill in the complete township, range, and section to the nearest quarter-quarter section. A township is north or south of the baseline, and a range is east or west of the principal meridian (e.g., T12N, R34W). Also include the distance, in feet, from the nearest north or south line and nearest east or west line of the quarter-section. Also, enter the **latitude** and **longitude** of the well in decimal degrees, to five or six places if possible; be sure to include a negative sign for the longitude of a well in the Western Hemisphere and a negative sign for the latitude of a well in the Southern Hemisphere.

Enter the **WELL CLASS,** i.e., the class of injection well as defined in 40 CFR 144.6.

TIMING OF THE ACTION: Check ***Notice prior to work*** if the activity has not yet occurred (i.e., is planned). Check ***Report after work*** if the activity described has already occurred. As appropriate, include the date the activity is expected to start or the date the activity was completed. (Note this may not be available, e.g., for a plugging plan submitted with a permit application.)

TYPE OF ACTION: Check the appropriate box to describe the kind of activity being reported. Check ***Well Rework*** for work that was/will be performed on the well after it has already been in operation as an injection well. Check ***Plugging and Abandonment*** to report on plans for or descriptions of final closure/plugging after use as an injection well. Check ***Conversion to a Non-Injection Well*** if the well is to be converted to something other than an injection well.

Provide a **NARRATIVE DESCRIPTION** of the work planned to be performed, or that was performed. The narrative should include a description of the main procedures planned or that occurred during the work activity. A service company report, daily report, or similar document may be attached if it includes all the requested information and is clear and legible.

For well reworks, include the following information: The reason for the well rework; depths of activity; type of activity; changes to injection well configuration, well casing, or cement behind casing; any plug added to the well and its depth; any newly drilled interval and its depth; method(s) to demonstrate that the well has mechanical integrity (as applicable); and any deviations from the approved rework plan (as applicable).

For a well plugging plan, include the following information: Reason for the well plugging; number of plugs placed, and their depths; materials used as plugs (e.g., cast iron bridge plug, cement, cement retainer); method to set plugs; and wait-on-cement times, if any. Also provide one or more cost estimates from an independent firm in the business of plugging and abandoning wells to plug the well as described in the plan.

For well plugging affidavit, include the following information: Reason for the well plugging; number of plugs placed, and their depths; materials used as plugs (e.g., cast iron bridge plug, cement, cement retainer); method to set plugs; wait-on-cement times, if any; and any deviations from the approved plugging plan (if applicable).

For conversion to a non-injection well, include the following information: Depths of activity; type of activity; changes to injection well configuration, well casing, or cement behind casing; any plug added to the well and its depth; any newly drilled interval and its depth; depths of new perforations; and method(s) to demonstrate that the well has mechanical integrity (as applicable).

For all of the above activities, include a well sketch depicting the work, results of well tests/logging performed, service company tickets, and any other available information demonstrating how the work was/is to be performed. Also, specify whether depths are below ground surface, relative to Kelly bushing, etc.

CERTIFICATION: This form must be signed and dated by either: a responsible corporate officer for a corporation, by a general partner for a partnership, by the proprietor of a sole proprietorship, or by a principal executive or ranking elected official for a public agency.

PAPERWORK REDUCTION ACT NOTICE: The public reporting and recordkeeping burden for this collection of information is estimated to average between 6.0 and 7.9 hours per response, depending on the injection well class. Burden means the total time, effort, or financial resource expended by persons to generate, maintain, retain, or disclose or provide information to or for a Federal Agency. This includes the time needed to review instructions; develop, acquire, install, and utilize technology and systems for the purposes of collecting, validating, and verifying information, processing and maintaining information, and disclosing and providing information; adjust the existing ways to comply with any previously applicable instructions and requirements; train personnel to be able to respond to the collection of information; search data sources; complete and review the collection of information; and, transmit or otherwise disclose the information. An agency may not conduct or sponsor, and a person is not required to respond to, a collection of information unless it displays a currently valid OMB control number. Send comments on the Agency's need for this information, the accuracy of the provided burden estimates, and any suggested methods for minimizing respondent burden, including the use of automated collection techniques to Director, Collection Strategies Division, U.S. Environmental Protection Agency (2822), 1200 Pennsylvania Ave., NW., Washington, D.C. 20460. Include the OMB control number in any correspondence. Do not send the completed forms to this address.

AS-BUILT COREHOLE 331S

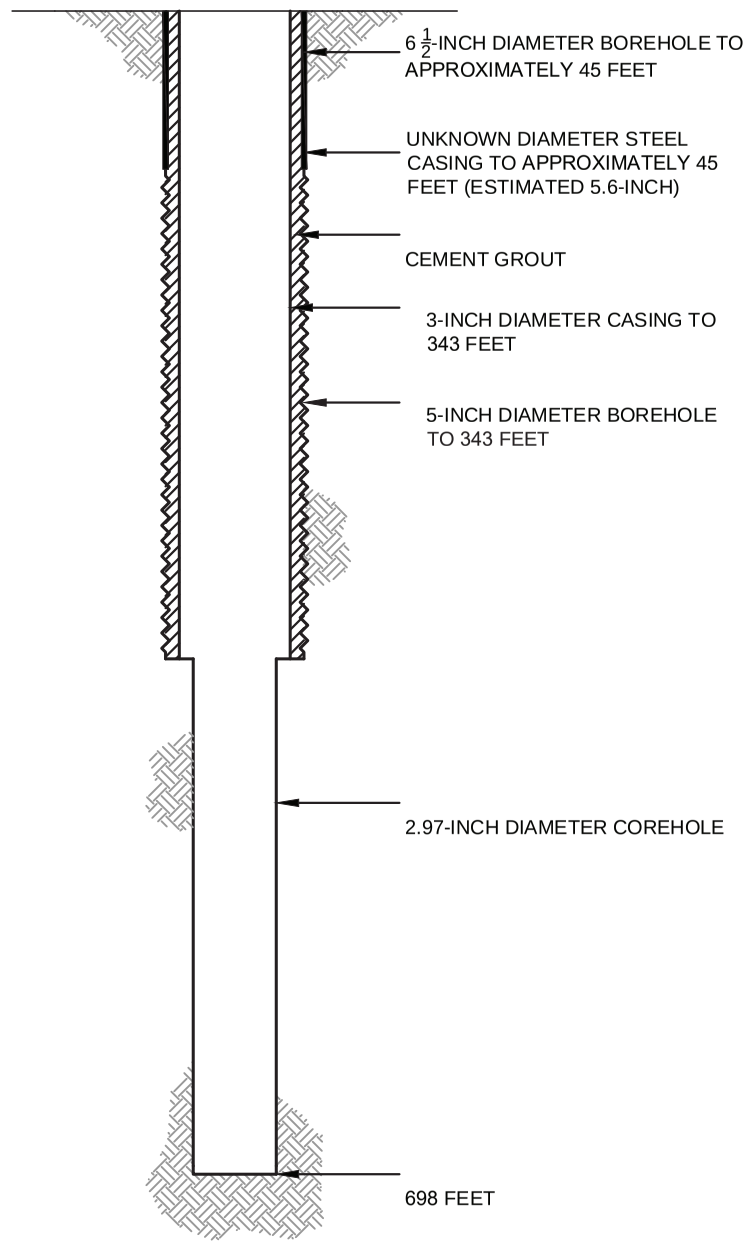

PROPOSED PLUGGING AND ABANDONMENT COREHOLE 331S

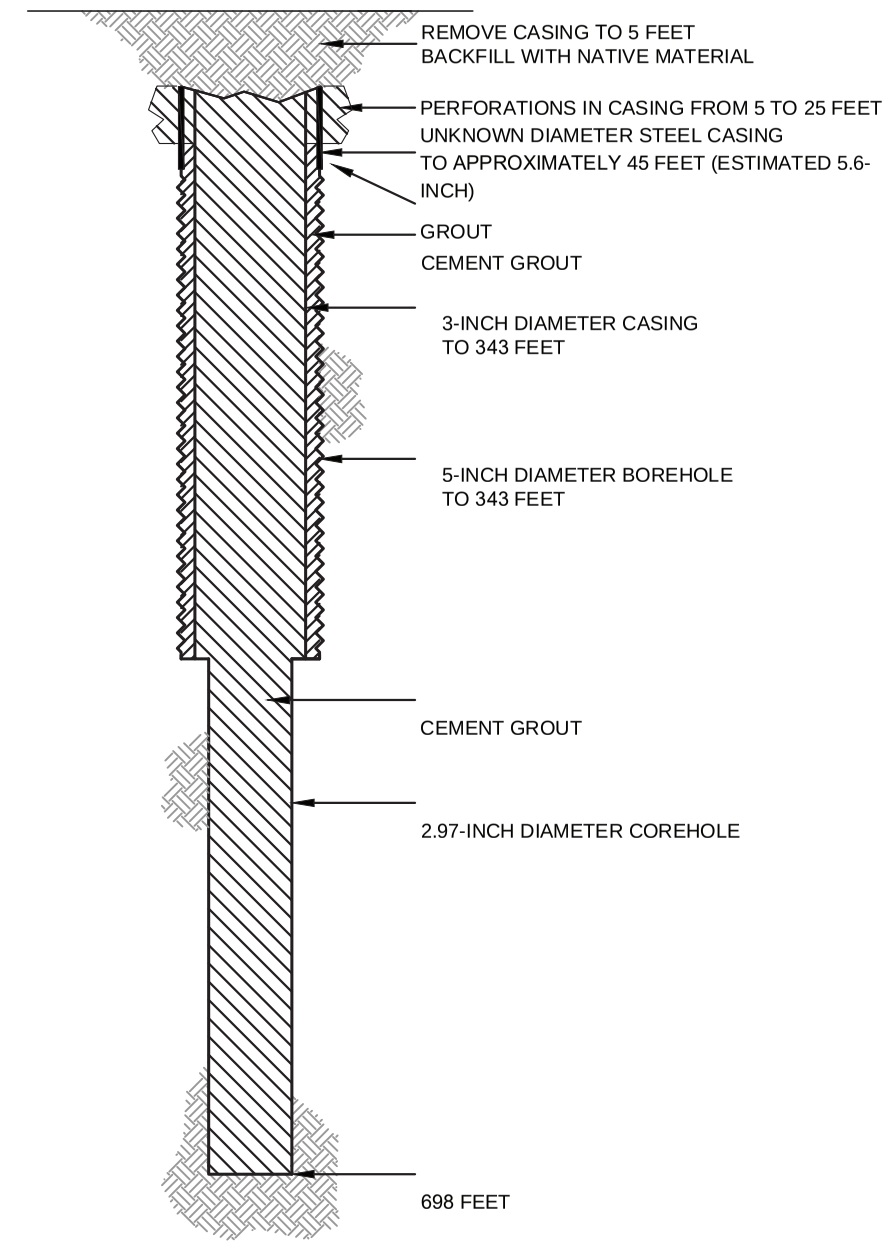

HALEY ALDRICH

FLORENCE COPPER, INC.
FLORENCE, ARIZONA

COREHOLE 331S DIAGRAM

FLORENCE COPPER INC.

NOT TO SCALE
SEPTEMBER 2019

FIGURE 1

MOBINI, GITA Printed: 4/21/2017 12:00 PM Layout: ABANDON (2)
G:\PROJECTS\CURIS RESOURCES\38706-CURIS FEASIBILITY\DRAWINGS\EPA\WELL ABANDON\415S_ABANDON.DWG

OMB No. 2040-0042 Approval Expires 4/30/2022

United States Environmental Protection Agency

WELL REWORK RECORD, PLUGGING AND ABANDONMENT PLAN, OR PLUGGING AND ABANDONMENT AFFIDAVIT

Name and Address, Phone Number and/or Email of Permittee

Florence Copper Project
1575 W Hunt Hwy,
Florence, AZ 85132

Permit or EPA ID Number	API Number	Full Well Name
R9UIC-AZ3-FY11-1		333S

State	County
Arizona	Pinal

Locate well in two directions from nearest lines of quarter section and drilling unit

Latitude 33.05032504

Surface Location

NE **1/4 of** SE **1/4 of Section** 28 **Township** 4S **Range** 9E

Longitude -111.4244423

_____ **ft. from (N/S)** _____ **Line of quarter section**

_____ **ft. from (E/W)** _____ **Line of quarter section.**

Well Class	Timing of Action (pick one)	Type of Action (pick one)
☐ Class I ☐ Class II ☑ Class III ☐ Class V	☑ Notice Prior to Work Date Expected to Commence March 2021 ☐ Report After Work Date Work Ended	☐ Well Rework ☑ Plugging and Abandonment ☐ Conversion to a Non-Injection Well

Provide a narrative description of the work planned to be performed, or that was performed. Use additional pages as necessary. See instructions.

A workover rig capable of performing the required abandonment operations at the required depths will be moved in and set up over the core hole. The core hole will be inspected to determine the depth to which the hole remains open and if any obstructions are present in the core hole; the presence and condition of any existing collar will also be documented. If necessary, the core hole will be cleaned out to a depth of at least 100 feet below the bedrock-LBFU contact to enable placement of cement seals.

If collar is present, an attempt will be made to remove it. If removal of the collar is not feasible, it will be left in the hole and perforated as needed to allow an annular seal to be placed to a depth of at least 25 feet bgs. In areas of agricultural use, the surface casing will be cut at least 5 feet bgs and removed.

If the collar cannot be removed, it will be perforated from at least 20 feet below the bedrock-LBFU contact to at least 20 feet above the contact; from at least 20 feet below the base of the MFGU to at least 20 feet above the top of the MFGU; and from at least 25 feet bgs to 5 feet bgs.

A tremie pipe will be used to place Type V cement in the open core hole from the bottom of the core hole to the top of the core hole. Cement retainers, as described above, will be used to force cement grout into the annulus and behind perforated intervals, as necessary.

If the hole has been obstructed, as much cement as possible will be placed from 100 feet below the LBFU-bedrock contact to the top of the core hole.

The volume of Type V cement will be recorded and will not be less than the estimated volume of material required to fill each interval. All cement grout will consist of Type V cement, or equivalent approved in accordance with the UIC Permit.

Certification

I certify under the penalty of law that I have personally examined and am familiar with the information submitted in this document and all attachments and that, based on my inquiry of those individuals immediately responsible for obtaining the information, I believe that the information is true, accurate, and complete. I am aware that there are significant penalties for submitting false information, including the possibliity of fine and imprisonment. (Ref. 40 CFR § 144.32)

Name and Official Title *(Please type or print)*	Signature	Date Signed
Dan Johnson, VP - General Manager		10/3/2019

INSTRUCTIONS FOR FORM 7520-19

This form replaces forms 7520-12 and 7520-14. Use this form only when work is planned or has occurred that affects the well's construction or operation as an injection well, including work on the casing, tubing or packer (or for shallow Class V wells, the subsurface fluid emplacement network). Use one form per injection well. While reports or other information developed by contractors or service companies may be attached, this form must be signed by a responsible entity as described at 40 CFR 144.32. Note: operators closing Class V wells should use Form 7520-17.

NAME, ADDRESS, PHONE AND/OR EMAIL OF PERMITTEE: Enter the name and street address, city/town, state, and ZIP code of the permittee. Also provide an email address (if available) and/or a phone number.

PERMIT OR EPA ID NUMBER: Enter the well identification number or permit number assigned to the well by the EPA or the permitting authority.

API NUMBER: Enter the number assigned by the local jurisdiction (usually a State Oil and Gas Agency) using the American Petroleum Institute standard numbering system.

FULL WELL NAME: Enter the full name of the well or project.

Enter the **STATE** and **COUNTY** where the well is located. For States that do not have counties, use the name of that State's equivalent jurisdiction at a more local level.

WELL LOCATION: Fill in the complete township, range, and section to the nearest quarter-quarter section. A township is north or south of the baseline, and a range is east or west of the principal meridian (e.g., T12N, R34W). Also include the distance, in feet, from the nearest north or south line and nearest east or west line of the quarter-section. Also, enter the **latitude** and **longitude** of the well in decimal degrees, to five or six places if possible; be sure to include a negative sign for the longitude of a well in the Western Hemisphere and a negative sign for the latitude of a well in the Southern Hemisphere.

Enter the **WELL CLASS,** i.e., the class of injection well as defined in 40 CFR 144.6.

TIMING OF THE ACTION: Check ***Notice prior to work*** if the activity has not yet occurred (i.e., is planned). Check ***Report after work*** if the activity described has already occurred. As appropriate, include the date the activity is expected to start or the date the activity was completed. (Note this may not be available, e.g., for a plugging plan submitted with a permit application.)

TYPE OF ACTION: Check the appropriate box to describe the kind of activity being reported. Check ***Well Rework*** for work that was/will be performed on the well after it has already been in operation as an injection well. Check ***Plugging and Abandonment*** to report on plans for or descriptions of final closure/plugging after use as an injection well. Check ***Conversion to a Non-Injection Well*** if the well is to be converted to something other than an injection well.

Provide a **NARRATIVE DESCRIPTION** of the work planned to be performed, or that was performed. The narrative should include a description of the main procedures planned or that occurred during the work activity. A service company report, daily report, or similar document may be attached if it includes all the requested information and is clear and legible.

For well reworks, include the following information: The reason for the well rework; depths of activity; type of activity; changes to injection well configuration, well casing, or cement behind casing; any plug added to the well and its depth; any newly drilled interval and its depth; method(s) to demonstrate that the well has mechanical integrity (as applicable); and any deviations from the approved rework plan (as applicable).

For a well plugging plan, include the following information: Reason for the well plugging; number of plugs placed, and their depths; materials used as plugs (e.g., cast iron bridge plug, cement, cement retainer); method to set plugs; and wait-on-cement times, if any. Also provide one or more cost estimates from an independent firm in the business of plugging and abandoning wells to plug the well as described in the plan.

For well plugging affidavit, include the following information: Reason for the well plugging; number of plugs placed, and their depths; materials used as plugs (e.g., cast iron bridge plug, cement, cement retainer); method to set plugs; wait-on-cement times, if any; and any deviations from the approved plugging plan (if applicable).

For conversion to a non-injection well, include the following information: Depths of activity; type of activity; changes to injection well configuration, well casing, or cement behind casing; any plug added to the well and its depth; any newly drilled interval and its depth; depths of new perforations; and method(s) to demonstrate that the well has mechanical integrity (as applicable).

For all of the above activities, include a well sketch depicting the work, results of well tests/logging performed, service company tickets, and any other available information demonstrating how the work was/is to be performed. Also, specify whether depths are below ground surface, relative to Kelly bushing, etc.

CERTIFICATION: This form must be signed and dated by either: a responsible corporate officer for a corporation, by a general partner for a partnership, by the proprietor of a sole proprietorship, or by a principal executive or ranking elected official for a public agency.

PAPERWORK REDUCTION ACT NOTICE: The public reporting and recordkeeping burden for this collection of information is estimated to average between 6.0 and 7.9 hours per response, depending on the injection well class. Burden means the total time, effort, or financial resource expended by persons to generate, maintain, retain, or disclose or provide information to or for a Federal Agency. This includes the time needed to review instructions; develop, acquire, install, and utilize technology and systems for the purposes of collecting, validating, and verifying information, processing and maintaining information, and disclosing and providing information; adjust the existing ways to comply with any previously applicable instructions and requirements; train personnel to be able to respond to the collection of information; search data sources; complete and review the collection of information; and, transmit or otherwise disclose the information. An agency may not conduct or sponsor, and a person is not required to respond to, a collection of information unless it displays a currently valid OMB control number. Send comments on the Agency's need for this information, the accuracy of the provided burden estimates, and any suggested methods for minimizing respondent burden, including the use of automated collection techniques to Director, Collection Strategies Division, U.S. Environmental Protection Agency (2822), 1200 Pennsylvania Ave., NW., Washington, D.C. 20460. Include the OMB control number in any correspondence. Do not send the completed forms to this address.

AS-BUILT COREHOLE 333S

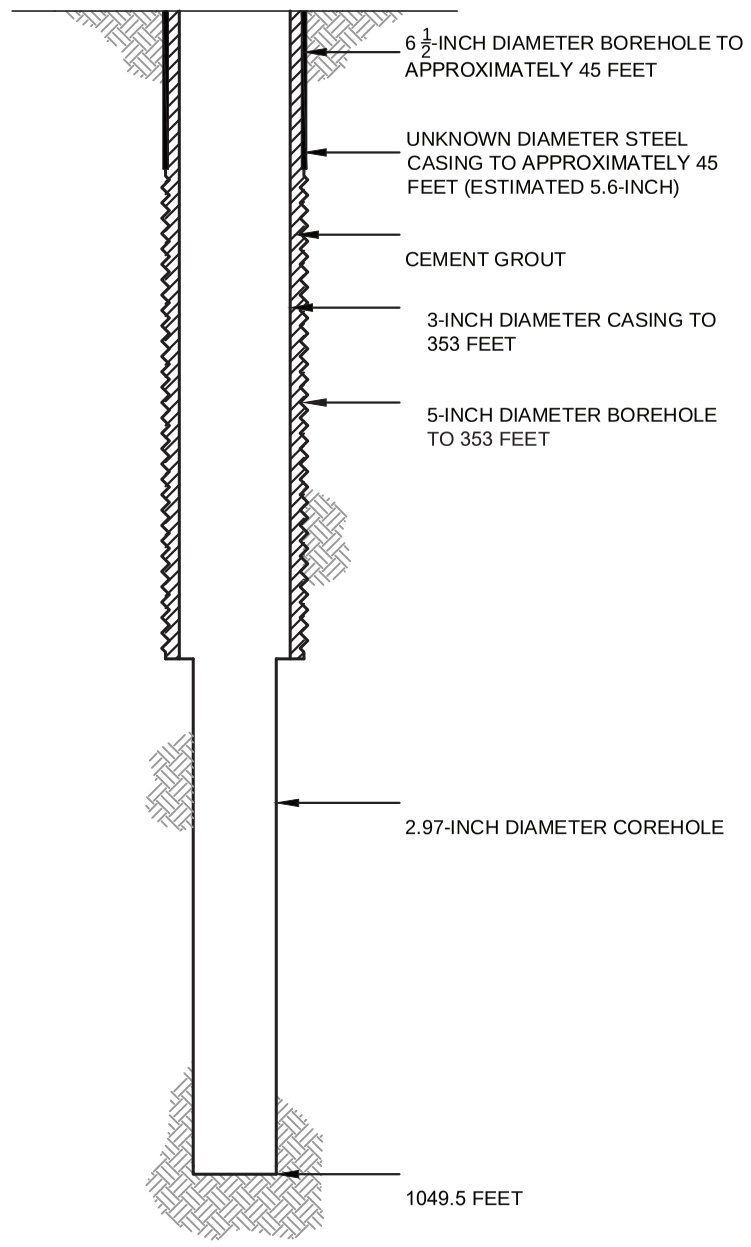

PROPOSED PLUGGING AND ABANDONMENT COREHOLE 333S

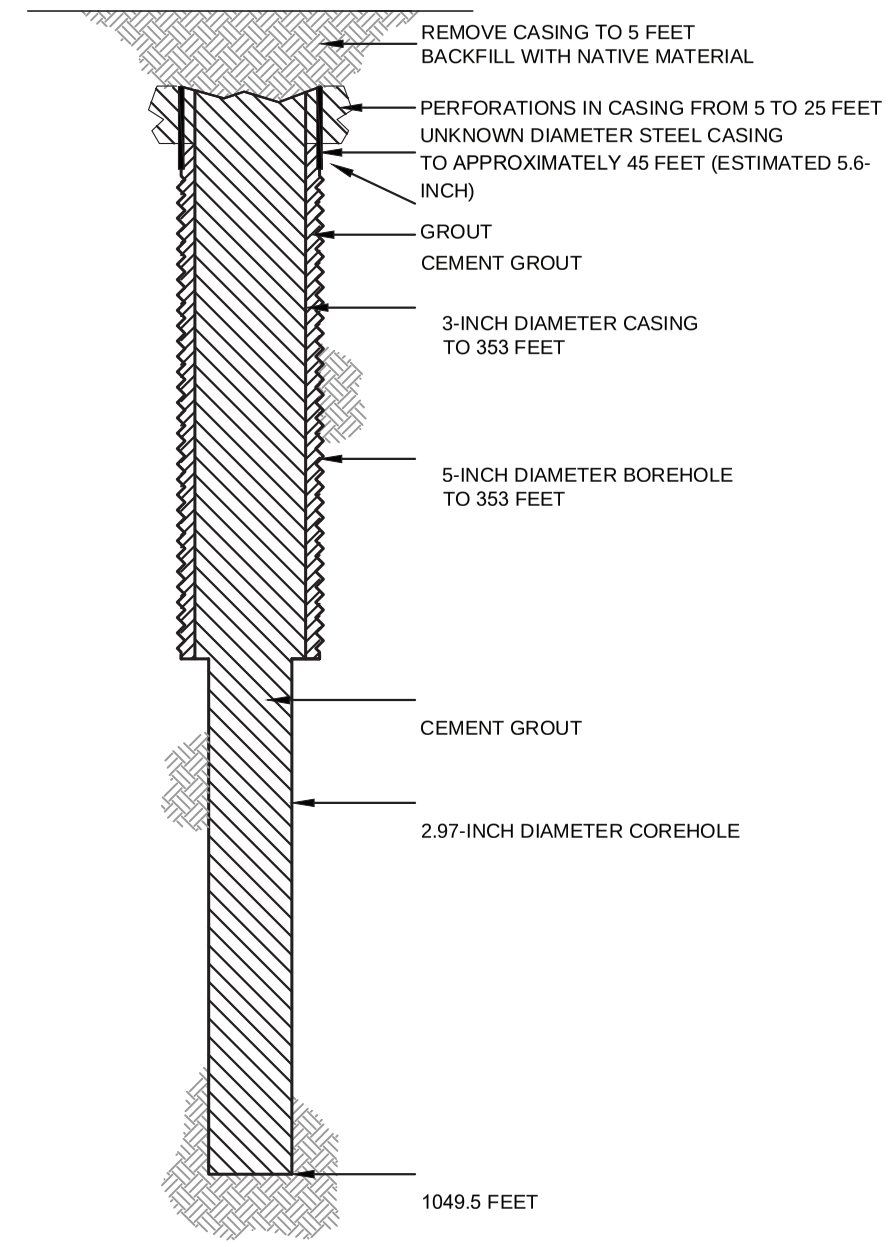

HALEY ALDRICH

FLORENCE COPPER, INC.
FLORENCE, ARIZONA

COREHOLE 333S DIAGRAM

FLORENCE COPPER INC.

NOT TO SCALE
SEPTEMBER 2019

FIGURE 1

MOBINI, GITA Printed: 4/21/2017 12:00 PM Layout: ABANDON (2)
G:\PROJECTS\CURIS RESOURCES\38706-CURIS FEASIBILITY\DRAWINGS\EPA\WELL ABANDON\415S_ABANDON.DWG

OMB No. 2040-0042 Approval Expires 4/30/2022

United States Environmental Protection Agency

EPA

WELL REWORK RECORD, PLUGGING AND ABANDONMENT PLAN, OR PLUGGING AND ABANDONMENT AFFIDAVIT

Name and Address, Phone Number and/or Email of Permittee

Florence Copper Project
1575 W Hunt Hwy,
Florence, AZ 85132

Permit or EPA ID Number	API Number	Full Well Name
R9UIC-AZ3-FY11-1		334S

State	County
Arizona	Pinal

Locate well in two directions from nearest lines of quarter section and drilling unit

Latitude 33.05032182

Longitude -111.4236265

Surface Location

NE **1/4 of** SE **1/4 of Section** 28 **Township** 4S **Range** 9E

_____ **ft. from (N/S)** _____ **Line of quarter section**

_____ **ft. from (E/W)** _____ **Line of quarter section.**

Well Class	Timing of Action (pick one)	Type of Action (pick one)
☐ Class I ☐ Class II ☑ Class III ☐ Class V	☑ Notice Prior to Work Date Expected to Commence March 2021 ☐ Report After Work Date Work Ended	☐ Well Rework ☑ Plugging and Abandonment ☐ Conversion to a Non-Injection Well

Provide a narrative description of the work planned to be performed, or that was performed. Use additional pages as necessary. See instructions.

A workover rig capable of performing the required abandonment operations at the required depths will be moved in and set up over the core hole. The core hole will be inspected to determine the depth to which the hole remains open and if any obstructions are present in the core hole; the presence and condition of any existing collar will also be documented. If necessary, the core hole will be cleaned out to a depth of at least 100 feet below the bedrock-LBFU contact to enable placement of cement seals.

If collar is present, an attempt will be made to remove it. If removal of the collar is not feasible, it will be left in the hole and perforated as needed to allow an annular seal to be placed to a depth of at least 25 feet bgs. In areas of agricultural use, the surface casing will be cut at least 5 feet bgs and removed.

If the collar cannot be removed, it will be perforated from at least 20 feet below the bedrock-LBFU contact to at least 20 feet above the contact; from at least 20 feet below the base of the MFGU to at least 20 feet above the top of the MFGU; and from at least 25 feet bgs to 5 feet bgs.

A tremie pipe will be used to place Type V cement in the open core hole from the bottom of the core hole to the top of the core hole. Cement retainers, as described above, will be used to force cement grout into the annulus and behind perforated intervals, as necessary.

If the hole has been obstructed, as much cement as possible will be placed from 100 feet below the LBFU-bedrock contact to the top of the core hole.

The volume of Type V cement will be recorded and will not be less than the estimated volume of material required to fill each interval. All cement grout will consist of Type V cement, or equivalent approved in accordance with the UIC Permit.

Certification

I certify under the penalty of law that I have personally examined and am familiar with the information submitted in this document and all attachments and that, based on my inquiry of those individuals immediately responsible for obtaining the information, I believe that the information is true, accurate, and complete. I am aware that there are significant penalties for submitting false information, including the possibliity of fine and imprisonment. (Ref. 40 CFR § 144.32)

Name and Official Title *(Please type or print)*	Signature	Date Signed
Dan Johnson, VP - General Manager		10/3/2019

INSTRUCTIONS FOR FORM 7520-19

This form replaces forms 7520-12 and 7520-14. Use this form only when work is planned or has occurred that affects the well's construction or operation as an injection well, including work on the casing, tubing or packer (or for shallow Class V wells, the subsurface fluid emplacement network). Use one form per injection well. While reports or other information developed by contractors or service companies may be attached, this form must be signed by a responsible entity as described at 40 CFR 144.32. Note: operators closing Class V wells should use Form 7520-17.

NAME, ADDRESS, PHONE AND/OR EMAIL OF PERMITTEE: Enter the name and street address, city/town, state, and ZIP code of the permittee. Also provide an email address (if available) and/or a phone number.

PERMIT OR EPA ID NUMBER: Enter the well identification number or permit number assigned to the well by the EPA or the permitting authority.

API NUMBER: Enter the number assigned by the local jurisdiction (usually a State Oil and Gas Agency) using the American Petroleum Institute standard numbering system.

FULL WELL NAME: Enter the full name of the well or project.

Enter the **STATE** and **COUNTY** where the well is located. For States that do not have counties, use the name of that State's equivalent jurisdiction at a more local level.

WELL LOCATION: Fill in the complete township, range, and section to the nearest quarter-quarter section. A township is north or south of the baseline, and a range is east or west of the principal meridian (e.g., T12N, R34W). Also include the distance, in feet, from the nearest north or south line and nearest east or west line of the quarter-section. Also, enter the **latitude** and **longitude** of the well in decimal degrees, to five or six places if possible; be sure to include a negative sign for the longitude of a well in the Western Hemisphere and a negative sign for the latitude of a well in the Southern Hemisphere.

Enter the **WELL CLASS,** i.e., the class of injection well as defined in 40 CFR 144.6.

TIMING OF THE ACTION: Check ***Notice prior to work*** if the activity has not yet occurred (i.e., is planned). Check ***Report after work*** if the activity described has already occurred. As appropriate, include the date the activity is expected to start or the date the activity was completed. (Note this may not be available, e.g., for a plugging plan submitted with a permit application.)

TYPE OF ACTION: Check the appropriate box to describe the kind of activity being reported. Check ***Well Rework*** for work that was/will be performed on the well after it has already been in operation as an injection well. Check ***Plugging and Abandonment*** to report on plans for or descriptions of final closure/plugging after use as an injection well. Check ***Conversion to a Non-Injection Well*** if the well is to be converted to something other than an injection well.

Provide a **NARRATIVE DESCRIPTION** of the work planned to be performed, or that was performed. The narrative should include a description of the main procedures planned or that occurred during the work activity. A service company report, daily report, or similar document may be attached if it includes all the requested information and is clear and legible.

For well reworks, include the following information: The reason for the well rework; depths of activity; type of activity; changes to injection well configuration, well casing, or cement behind casing; any plug added to the well and its depth; any newly drilled interval and its depth; method(s) to demonstrate that the well has mechanical integrity (as applicable); and any deviations from the approved rework plan (as applicable).

For a well plugging plan, include the following information: Reason for the well plugging; number of plugs placed, and their depths; materials used as plugs (e.g., cast iron bridge plug, cement, cement retainer); method to set plugs; and wait-on-cement times, if any. Also provide one or more cost estimates from an independent firm in the business of plugging and abandoning wells to plug the well as described in the plan.

For well plugging affidavit, include the following information: Reason for the well plugging; number of plugs placed, and their depths; materials used as plugs (e.g., cast iron bridge plug, cement, cement retainer); method to set plugs; wait-on-cement times, if any; and any deviations from the approved plugging plan (if applicable).

For conversion to a non-injection well, include the following information: Depths of activity; type of activity; changes to injection well configuration, well casing, or cement behind casing; any plug added to the well and its depth; any newly drilled interval and its depth; depths of new perforations; and method(s) to demonstrate that the well has mechanical integrity (as applicable).

For all of the above activities, include a well sketch depicting the work, results of well tests/logging performed, service company tickets, and any other available information demonstrating how the work was/is to be performed. Also, specify whether depths are below ground surface, relative to Kelly bushing, etc.

CERTIFICATION: This form must be signed and dated by either: a responsible corporate officer for a corporation, by a general partner for a partnership, by the proprietor of a sole proprietorship, or by a principal executive or ranking elected official for a public agency.

PAPERWORK REDUCTION ACT NOTICE: The public reporting and recordkeeping burden for this collection of information is estimated to average between 6.0 and 7.9 hours per response, depending on the injection well class. Burden means the total time, effort, or financial resource expended by persons to generate, maintain, retain, or disclose or provide information to or for a Federal Agency. This includes the time needed to review instructions; develop, acquire, install, and utilize technology and systems for the purposes of collecting, validating, and verifying information, processing and maintaining information, and disclosing and providing information; adjust the existing ways to comply with any previously applicable instructions and requirements; train personnel to be able to respond to the collection of information; search data sources; complete and review the collection of information; and, transmit or otherwise disclose the information. An agency may not conduct or sponsor, and a person is not required to respond to, a collection of information unless it displays a currently valid OMB control number. Send comments on the Agency's need for this information, the accuracy of the provided burden estimates, and any suggested methods for minimizing respondent burden, including the use of automated collection techniques to Director, Collection Strategies Division, U.S. Environmental Protection Agency (2822), 1200 Pennsylvania Ave., NW., Washington, D.C. 20460. Include the OMB control number in any correspondence. Do not send the completed forms to this address.

AS-BUILT COREHOLE 344S

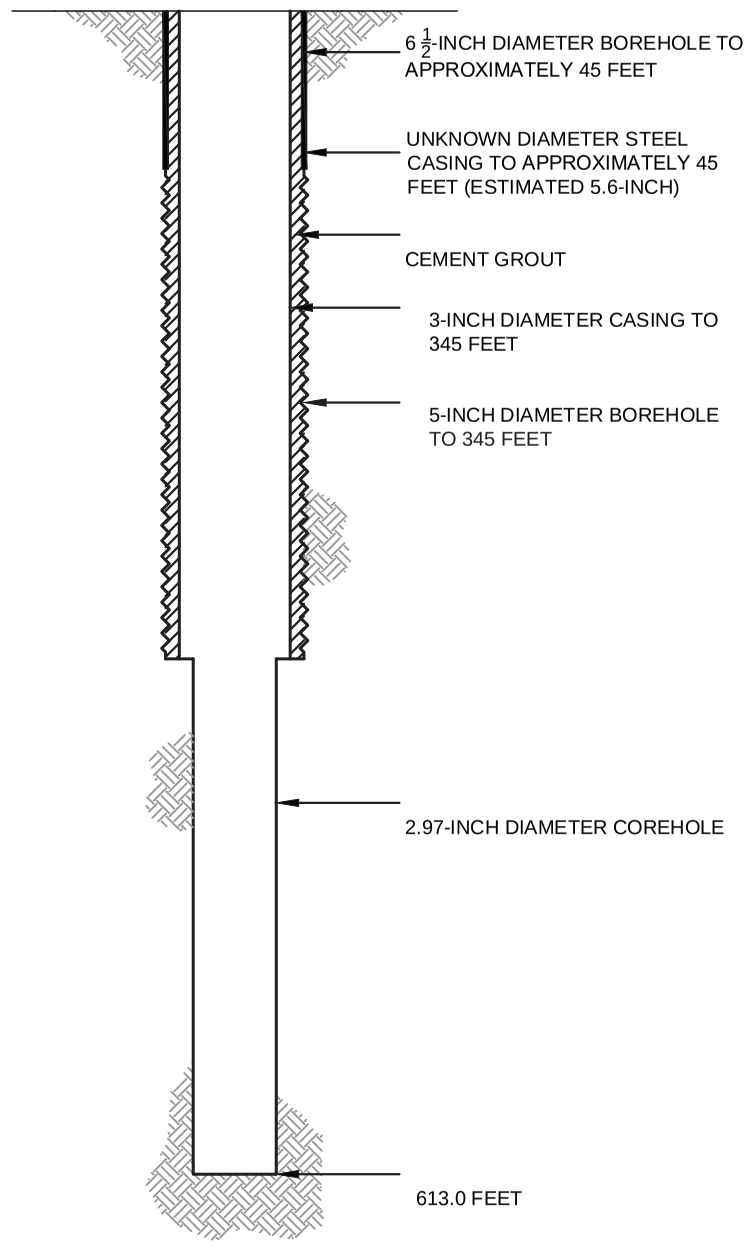

PROPOSED PLUGGING AND ABANDONMENT COREHOLE 344S

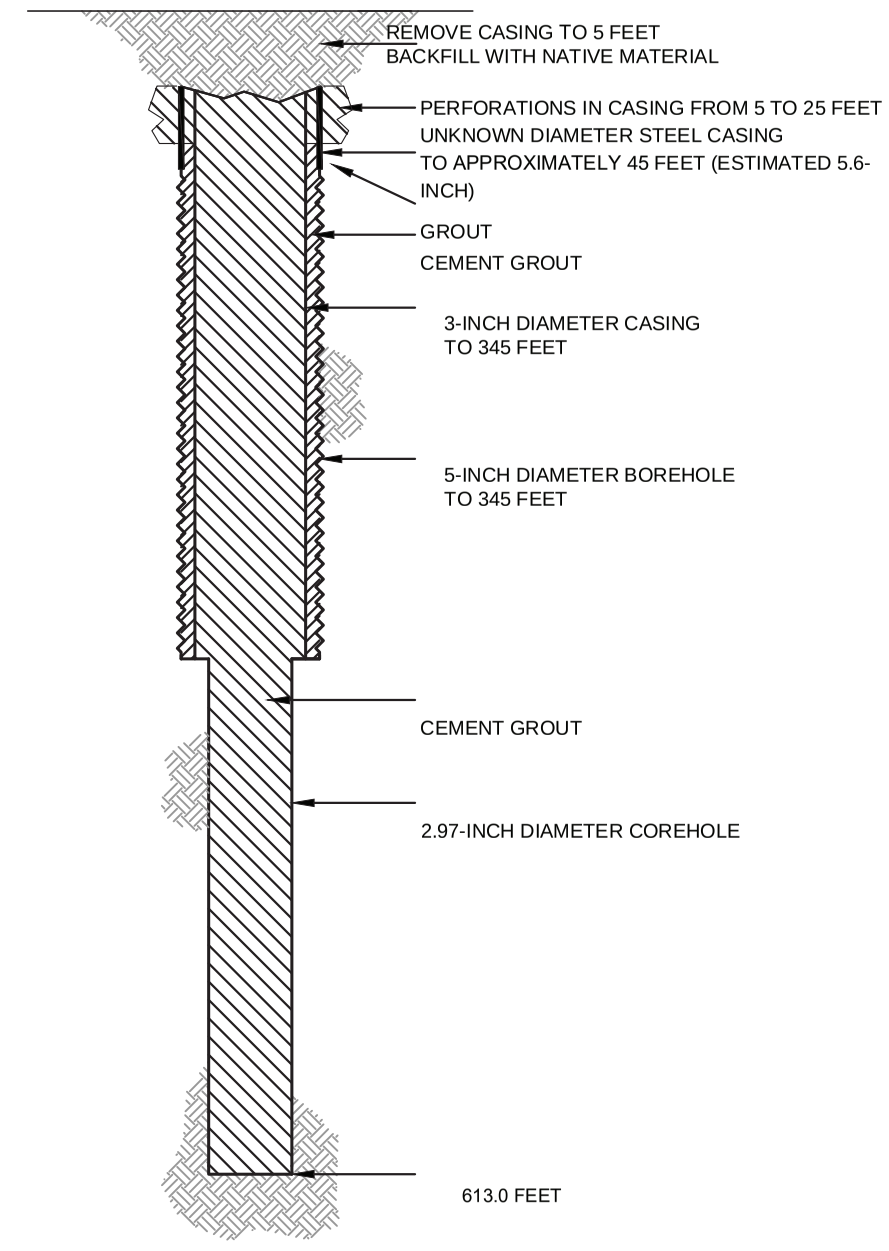

HALEY ALDRICH

FLORENCE COPPER, INC.
FLORENCE, ARIZONA

COREHOLE 344S DIAGRAM

FLORENCE COPPER INC.

NOT TO SCALE
SEPTEMBER 2019

FIGURE 1

MOBINI, GITA Printed: 4/21/2017 12:00 PM Layout: ABANDON (2)
G:\PROJECTS\CURIS RESOURCES\38706-CURIS FEASIBILITY\DRAWINGS\EPA\WELL ABANDON\415S_ABANDON.DWG

OMB No. 2040-0042 Approval Expires 4/30/2022

United States Environmental Protection Agency

WELL REWORK RECORD, PLUGGING AND ABANDONMENT PLAN, OR PLUGGING AND ABANDONMENT AFFIDAVIT

Name and Address, Phone Number and/or Email of Permittee

Florence Copper Project
1575 W Hunt Hwy,
Florence, AZ 85132

Permit or EPA ID Number	API Number	Full Well Name
R9UIC-AZ3-FY11-1		335S

State	County
Arizona	Pinal

Locate well in two directions from nearest lines of quarter section and drilling unit

Latitude 33.05210539

Longitude -111.4232086

Surface Location

NE **1/4 of** SE **1/4 of Section** 28 **Township** 4S **Range** 9E

_____ **ft. from (N/S)** _____ **Line of quarter section**

_____ **ft. from (E/W)** _____ **Line of quarter section.**

Well Class	Timing of Action (pick one)	Type of Action (pick one)
☐ Class I ☐ Class II ☑ Class III ☐ Class V	☑ Notice Prior to Work Date Expected to Commence March 2021 ☐ Report After Work Date Work Ended	☐ Well Rework ☑ Plugging and Abandonment ☐ Conversion to a Non-Injection Well

Provide a narrative description of the work planned to be performed, or that was performed. Use additional pages as necessary. See instructions.

A workover rig capable of performing the required abandonment operations at the required depths will be moved in and set up over the core hole. The core hole will be inspected to determine the depth to which the hole remains open and if any obstructions are present in the core hole; the presence and condition of any existing collar will also be documented. If necessary, the core hole will be cleaned out to a depth of at least 100 feet below the bedrock-LBFU contact to enable placement of cement seals.

If collar is present, an attempt will be made to remove it. If removal of the collar is not feasible, it will be left in the hole and perforated as needed to allow an annular seal to be placed to a depth of at least 25 feet bgs. In areas of agricultural use, the surface casing will be cut at least 5 feet bgs and removed.

If the collar cannot be removed, it will be perforated from at least 20 feet below the bedrock-LBFU contact to at least 20 feet above the contact; from at least 20 feet below the base of the MFGU to at least 20 feet above the top of the MFGU; and from at least 25 feet bgs to 5 feet bgs.

A tremie pipe will be used to place Type V cement in the open core hole from the bottom of the core hole to the top of the core hole. Cement retainers, as described above, will be used to force cement grout into the annulus and behind perforated intervals, as necessary.

If the hole has been obstructed, as much cement as possible will be placed from 100 feet below the LBFU-bedrock contact to the top of the core hole.

The volume of Type V cement will be recorded and will not be less than the estimated volume of material required to fill each interval. All cement grout will consist of Type V cement, or equivalent approved in accordance with the UIC Permit.

Certification

I certify under the penalty of law that I have personally examined and am familiar with the information submitted in this document and all attachments and that, based on my inquiry of those individuals immediately responsible for obtaining the information, I believe that the information is true, accurate, and complete. I am aware that there are significant penalties for submitting false information, including the possibliity of fine and imprisonment. (Ref. 40 CFR § 144.32)

Name and Official Title *(Please type or print)*	Signature	Date Signed
Dan Johnson, VP - General Manager		10/3/2019

INSTRUCTIONS FOR FORM 7520-19

This form replaces forms 7520-12 and 7520-14. Use this form only when work is planned or has occurred that affects the well's construction or operation as an injection well, including work on the casing, tubing or packer (or for shallow Class V wells, the subsurface fluid emplacement network). Use one form per injection well. While reports or other information developed by contractors or service companies may be attached, this form must be signed by a responsible entity as described at 40 CFR 144.32. Note: operators closing Class V wells should use Form 7520-17.

NAME, ADDRESS, PHONE AND/OR EMAIL OF PERMITTEE: Enter the name and street address, city/town, state, and ZIP code of the permittee. Also provide an email address (if available) and/or a phone number.

PERMIT OR EPA ID NUMBER: Enter the well identification number or permit number assigned to the well by the EPA or the permitting authority.

API NUMBER: Enter the number assigned by the local jurisdiction (usually a State Oil and Gas Agency) using the American Petroleum Institute standard numbering system.

FULL WELL NAME: Enter the full name of the well or project.

Enter the **STATE** and **COUNTY** where the well is located. For States that do not have counties, use the name of that State's equivalent jurisdiction at a more local level.

WELL LOCATION: Fill in the complete township, range, and section to the nearest quarter-quarter section. A township is north or south of the baseline, and a range is east or west of the principal meridian (e.g., T12N, R34W). Also include the distance, in feet, from the nearest north or south line and nearest east or west line of the quarter-section. Also, enter the **latitude** and **longitude** of the well in decimal degrees, to five or six places if possible; be sure to include a negative sign for the longitude of a well in the Western Hemisphere and a negative sign for the latitude of a well in the Southern Hemisphere.

Enter the **WELL CLASS,** i.e., the class of injection well as defined in 40 CFR 144.6.

TIMING OF THE ACTION: Check ***Notice prior to work*** if the activity has not yet occurred (i.e., is planned). Check ***Report after work*** if the activity described has already occurred. As appropriate, include the date the activity is expected to start or the date the activity was completed. (Note this may not be available, e.g., for a plugging plan submitted with a permit application.)

TYPE OF ACTION: Check the appropriate box to describe the kind of activity being reported. Check ***Well Rework*** for work that was/will be performed on the well after it has already been in operation as an injection well. Check ***Plugging and Abandonment*** to report on plans for or descriptions of final closure/plugging after use as an injection well. Check ***Conversion to a Non-Injection Well*** if the well is to be converted to something other than an injection well.

Provide a **NARRATIVE DESCRIPTION** of the work planned to be performed, or that was performed. The narrative should include a description of the main procedures planned or that occurred during the work activity. A service company report, daily report, or similar document may be attached if it includes all the requested information and is clear and legible.

For well reworks, include the following information: The reason for the well rework; depths of activity; type of activity; changes to injection well configuration, well casing, or cement behind casing; any plug added to the well and its depth; any newly drilled interval and its depth; method(s) to demonstrate that the well has mechanical integrity (as applicable); and any deviations from the approved rework plan (as applicable).

For a well plugging plan, include the following information: Reason for the well plugging; number of plugs placed, and their depths; materials used as plugs (e.g., cast iron bridge plug, cement, cement retainer); method to set plugs; and wait-on-cement times, if any. Also provide one or more cost estimates from an independent firm in the business of plugging and abandoning wells to plug the well as described in the plan.

For well plugging affidavit, include the following information: Reason for the well plugging; number of plugs placed, and their depths; materials used as plugs (e.g., cast iron bridge plug, cement, cement retainer); method to set plugs; wait-on-cement times, if any; and any deviations from the approved plugging plan (if applicable).

For conversion to a non-injection well, include the following information: Depths of activity; type of activity; changes to injection well configuration, well casing, or cement behind casing; any plug added to the well and its depth; any newly drilled interval and its depth; depths of new perforations; and method(s) to demonstrate that the well has mechanical integrity (as applicable).

For all of the above activities, include a well sketch depicting the work, results of well tests/logging performed, service company tickets, and any other available information demonstrating how the work was/is to be performed. Also, specify whether depths are below ground surface, relative to Kelly bushing, etc.

CERTIFICATION: This form must be signed and dated by either: a responsible corporate officer for a corporation, by a general partner for a partnership, by the proprietor of a sole proprietorship, or by a principal executive or ranking elected official for a public agency.

PAPERWORK REDUCTION ACT NOTICE: The public reporting and recordkeeping burden for this collection of information is estimated to average between 6.0 and 7.9 hours per response, depending on the injection well class. Burden means the total time, effort, or financial resource expended by persons to generate, maintain, retain, or disclose or provide information to or for a Federal Agency. This includes the time needed to review instructions; develop, acquire, install, and utilize technology and systems for the purposes of collecting, validating, and verifying information, processing and maintaining information, and disclosing and providing information; adjust the existing ways to comply with any previously applicable instructions and requirements; train personnel to be able to respond to the collection of information; search data sources; complete and review the collection of information; and, transmit or otherwise disclose the information. An agency may not conduct or sponsor, and a person is not required to respond to, a collection of information unless it displays a currently valid OMB control number. Send comments on the Agency's need for this information, the accuracy of the provided burden estimates, and any suggested methods for minimizing respondent burden, including the use of automated collection techniques to Director, Collection Strategies Division, U.S. Environmental Protection Agency (2822), 1200 Pennsylvania Ave., NW., Washington, D.C. 20460. Include the OMB control number in any correspondence. Do not send the completed forms to this address.

AS-BUILT COREHOLE 335S

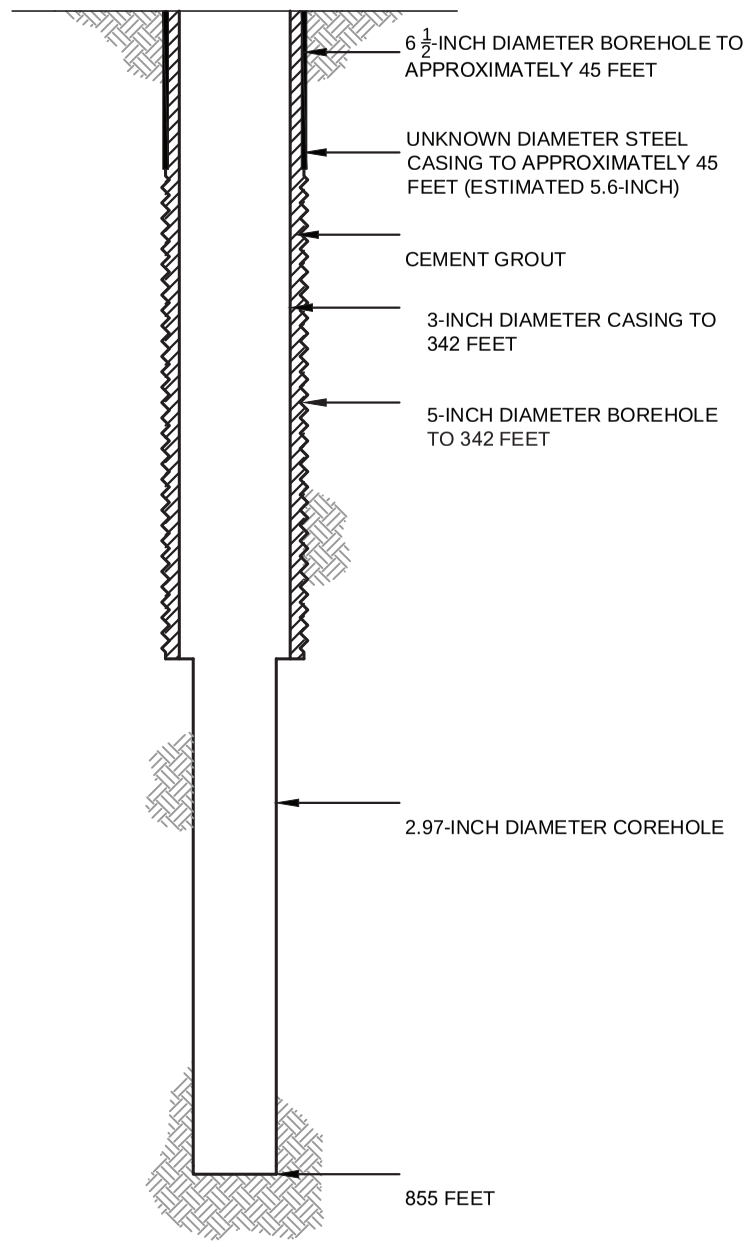

PROPOSED PLUGGING AND ABANDONMENT COREHOLE 335S

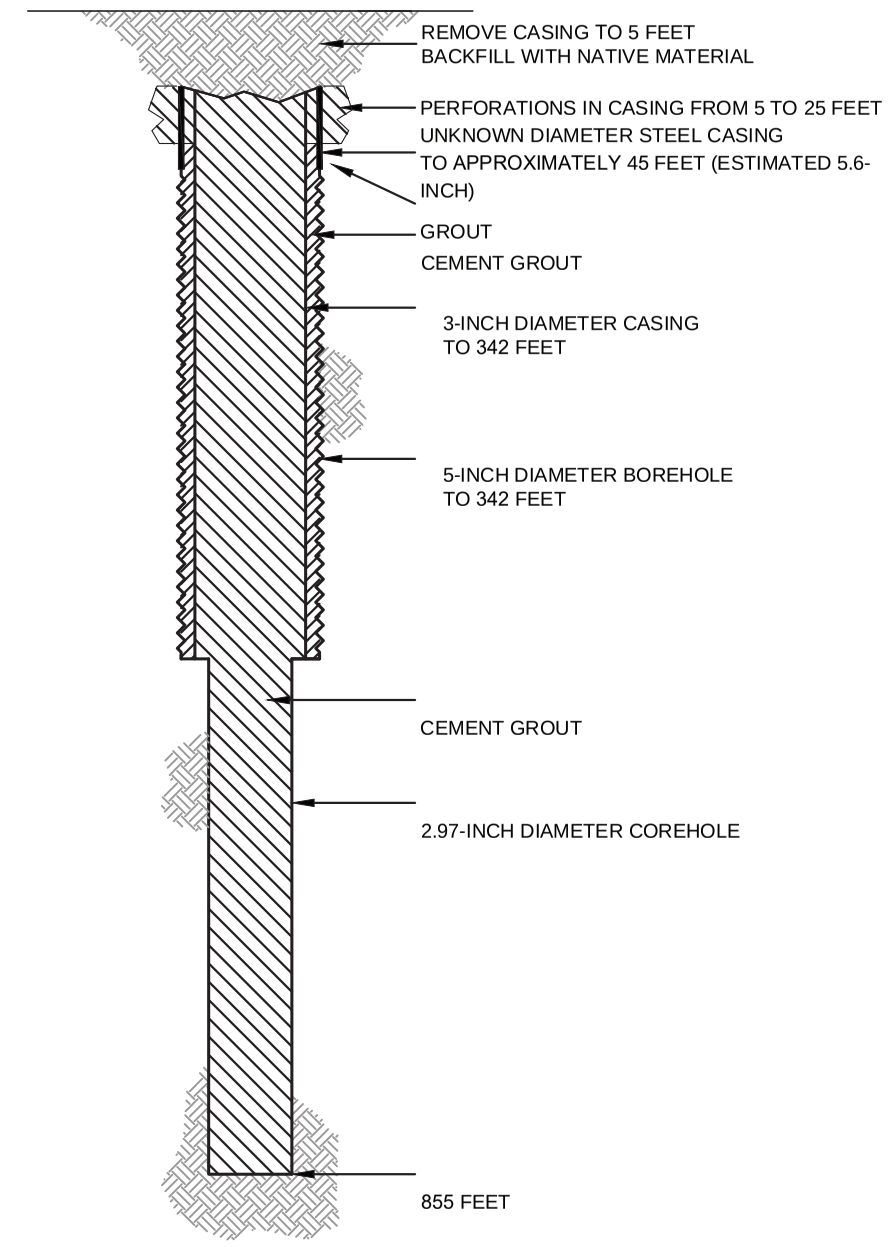

HALEY ALDRICH

FLORENCE COPPER, INC.
FLORENCE, ARIZONA

COREHOLE 335S DIAGRAM

FLORENCE COPPER INC.

NOT TO SCALE
SEPTEMBER 2019

FIGURE 1

MOBINI, GITA Printed: 4/21/2017 12:00 PM Layout: ABANDON (2)
G:\PROJECTS\CURIS RESOURCES\38706-CURIS FEASIBILITY\DRAWINGS\EPA\WELL ABANDON\415S_ABANDON.DWG

OMB No. 2040-0042 Approval Expires 4/30/2022

United States Environmental Protection Agency

WELL REWORK RECORD, PLUGGING AND ABANDONMENT PLAN, OR PLUGGING AND ABANDONMENT AFFIDAVIT

Name and Address, Phone Number and/or Email of Permittee

Florence Copper Project
1575 W Hunt Hwy,
Florence, AZ 85132

Permit or EPA ID Number	API Number	Full Well Name
R9UIC-AZ3-FY11-1		336S

State	County
Arizona	Pinal

Locate well in two directions from nearest lines of quarter section and drilling unit

Latitude 33.05151194

Longitude -111.4236198

Surface Location

NE **1/4 of** SE **1/4 of Section** 28 **Township** 4S **Range** 9E

_____ **ft. from (N/S)** _____ **Line of quarter section**

_____ **ft. from (E/W)** _____ **Line of quarter section.**

Well Class	Timing of Action (pick one)	Type of Action (pick one)
☐ Class I ☐ Class II ☑ Class III ☐ Class V	☑ Notice Prior to Work Date Expected to Commence March 2021 ☐ Report After Work Date Work Ended	☐ Well Rework ☑ Plugging and Abandonment ☐ Conversion to a Non-Injection Well

Provide a narrative description of the work planned to be performed, or that was performed. Use additional pages as necessary. See instructions.

A workover rig capable of performing the required abandonment operations at the required depths will be moved in and set up over the core hole. The core hole will be inspected to determine the depth to which the hole remains open and if any obstructions are present in the core hole; the presence and condition of any existing collar will also be documented. If necessary, the core hole will be cleaned out to a depth of at least 100 feet below the bedrock-LBFU contact to enable placement of cement seals.

If collar is present, an attempt will be made to remove it. If removal of the collar is not feasible, it will be left in the hole and perforated as needed to allow an annular seal to be placed to a depth of at least 25 feet bgs. In areas of agricultural use, the surface casing will be cut at least 5 feet bgs and removed.

If the collar cannot be removed, it will be perforated from at least 20 feet below the bedrock-LBFU contact to at least 20 feet above the contact; from at least 20 feet below the base of the MFGU to at least 20 feet above the top of the MFGU; and from at least 25 feet bgs to 5 feet bgs.

A tremie pipe will be used to place Type V cement in the open core hole from the bottom of the core hole to the top of the core hole. Cement retainers, as described above, will be used to force cement grout into the annulus and behind perforated intervals, as necessary.

If the hole has been obstructed, as much cement as possible will be placed from 100 feet below the LBFU-bedrock contact to the top of the core hole.

The volume of Type V cement will be recorded and will not be less than the estimated volume of material required to fill each interval. All cement grout will consist of Type V cement, or equivalent approved in accordance with the UIC Permit.

Certification

I certify under the penalty of law that I have personally examined and am familiar with the information submitted in this document and all attachments and that, based on my inquiry of those individuals immediately responsible for obtaining the information, I believe that the information is true, accurate, and complete. I am aware that there are significant penalties for submitting false information, including the possibliity of fine and imprisonment. (Ref. 40 CFR § 144.32)

Name and Official Title *(Please type or print)*	Signature	Date Signed
Dan Johnson, VP - General Manager		10/3/2019

INSTRUCTIONS FOR FORM 7520-19

This form replaces forms 7520-12 and 7520-14. Use this form only when work is planned or has occurred that affects the well's construction or operation as an injection well, including work on the casing, tubing or packer (or for shallow Class V wells, the subsurface fluid emplacement network). Use one form per injection well. While reports or other information developed by contractors or service companies may be attached, this form must be signed by a responsible entity as described at 40 CFR 144.32. Note: operators closing Class V wells should use Form 7520-17.

NAME, ADDRESS, PHONE AND/OR EMAIL OF PERMITTEE: Enter the name and street address, city/town, state, and ZIP code of the permittee. Also provide an email address (if available) and/or a phone number.

PERMIT OR EPA ID NUMBER: Enter the well identification number or permit number assigned to the well by the EPA or the permitting authority.

API NUMBER: Enter the number assigned by the local jurisdiction (usually a State Oil and Gas Agency) using the American Petroleum Institute standard numbering system.

FULL WELL NAME: Enter the full name of the well or project.

Enter the **STATE** and **COUNTY** where the well is located. For States that do not have counties, use the name of that State's equivalent jurisdiction at a more local level.

WELL LOCATION: Fill in the complete township, range, and section to the nearest quarter-quarter section. A township is north or south of the baseline, and a range is east or west of the principal meridian (e.g., T12N, R34W). Also include the distance, in feet, from the nearest north or south line and nearest east or west line of the quarter-section. Also, enter the **latitude** and **longitude** of the well in decimal degrees, to five or six places if possible; be sure to include a negative sign for the longitude of a well in the Western Hemisphere and a negative sign for the latitude of a well in the Southern Hemisphere.

Enter the **WELL CLASS,** i.e., the class of injection well as defined in 40 CFR 144.6.

TIMING OF THE ACTION: Check ***Notice prior to work*** if the activity has not yet occurred (i.e., is planned). Check ***Report after work*** if the activity described has already occurred. As appropriate, include the date the activity is expected to start or the date the activity was completed. (Note this may not be available, e.g., for a plugging plan submitted with a permit application.)

TYPE OF ACTION: Check the appropriate box to describe the kind of activity being reported. Check ***Well Rework*** for work that was/will be performed on the well after it has already been in operation as an injection well. Check ***Plugging and Abandonment*** to report on plans for or descriptions of final closure/plugging after use as an injection well. Check ***Conversion to a Non-Injection Well*** if the well is to be converted to something other than an injection well.

Provide a **NARRATIVE DESCRIPTION** of the work planned to be performed, or that was performed. The narrative should include a description of the main procedures planned or that occurred during the work activity. A service company report, daily report, or similar document may be attached if it includes all the requested information and is clear and legible.

For well reworks, include the following information: The reason for the well rework; depths of activity; type of activity; changes to injection well configuration, well casing, or cement behind casing; any plug added to the well and its depth; any newly drilled interval and its depth; method(s) to demonstrate that the well has mechanical integrity (as applicable); and any deviations from the approved rework plan (as applicable).

For a well plugging plan, include the following information: Reason for the well plugging; number of plugs placed, and their depths; materials used as plugs (e.g., cast iron bridge plug, cement, cement retainer); method to set plugs; and wait-on-cement times, if any. Also provide one or more cost estimates from an independent firm in the business of plugging and abandoning wells to plug the well as described in the plan.

For well plugging affidavit, include the following information: Reason for the well plugging; number of plugs placed, and their depths; materials used as plugs (e.g., cast iron bridge plug, cement, cement retainer); method to set plugs; wait-on-cement times, if any; and any deviations from the approved plugging plan (if applicable).

For conversion to a non-injection well, include the following information: Depths of activity; type of activity; changes to injection well configuration, well casing, or cement behind casing; any plug added to the well and its depth; any newly drilled interval and its depth; depths of new perforations; and method(s) to demonstrate that the well has mechanical integrity (as applicable).

For all of the above activities, include a well sketch depicting the work, results of well tests/logging performed, service company tickets, and any other available information demonstrating how the work was/is to be performed. Also, specify whether depths are below ground surface, relative to Kelly bushing, etc.

CERTIFICATION: This form must be signed and dated by either: a responsible corporate officer for a corporation, by a general partner for a partnership, by the proprietor of a sole proprietorship, or by a principal executive or ranking elected official for a public agency.

PAPERWORK REDUCTION ACT NOTICE: The public reporting and recordkeeping burden for this collection of information is estimated to average between 6.0 and 7.9 hours per response, depending on the injection well class. Burden means the total time, effort, or financial resource expended by persons to generate, maintain, retain, or disclose or provide information to or for a Federal Agency. This includes the time needed to review instructions; develop, acquire, install, and utilize technology and systems for the purposes of collecting, validating, and verifying information, processing and maintaining information, and disclosing and providing information; adjust the existing ways to comply with any previously applicable instructions and requirements; train personnel to be able to respond to the collection of information; search data sources; complete and review the collection of information; and, transmit or otherwise disclose the information. An agency may not conduct or sponsor, and a person is not required to respond to, a collection of information unless it displays a currently valid OMB control number. Send comments on the Agency's need for this information, the accuracy of the provided burden estimates, and any suggested methods for minimizing respondent burden, including the use of automated collection techniques to Director, Collection Strategies Division, U.S. Environmental Protection Agency (2822), 1200 Pennsylvania Ave., NW., Washington, D.C. 20460. Include the OMB control number in any correspondence. Do not send the completed forms to this address.

AS-BUILT COREHOLE 336S

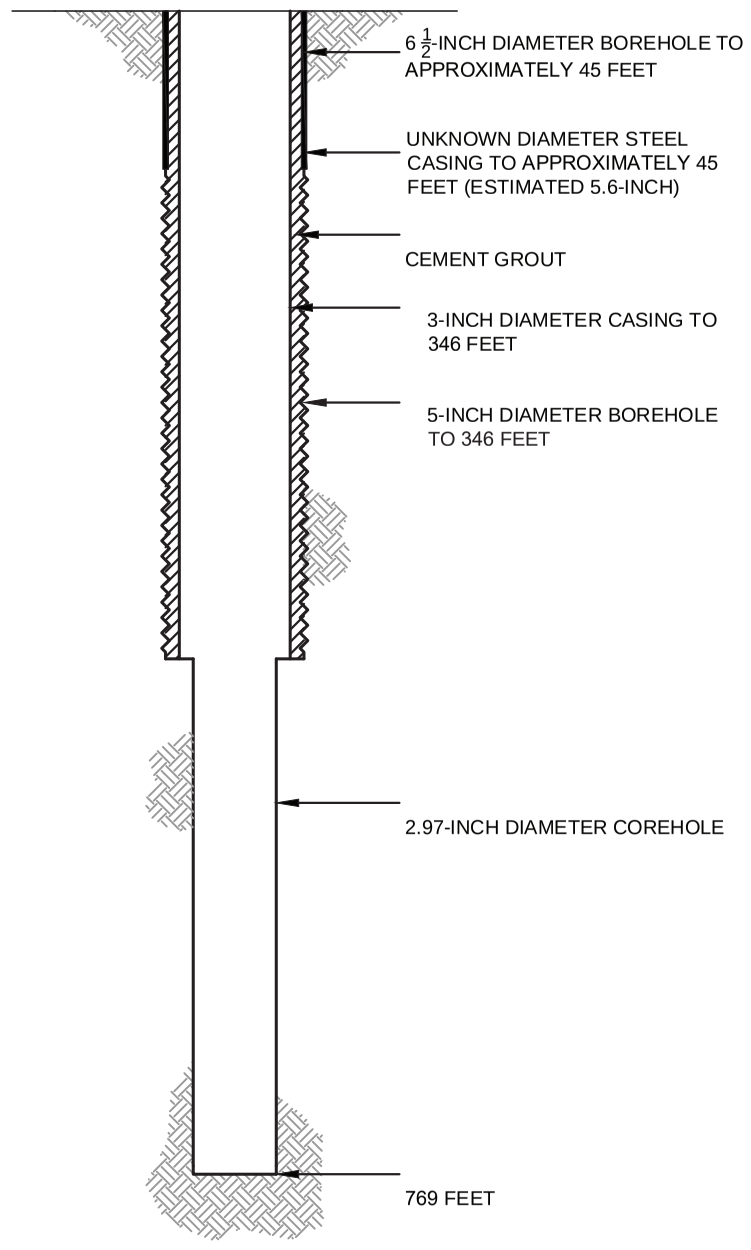

PROPOSED PLUGGING AND ABANDONMENT COREHOLE 336S

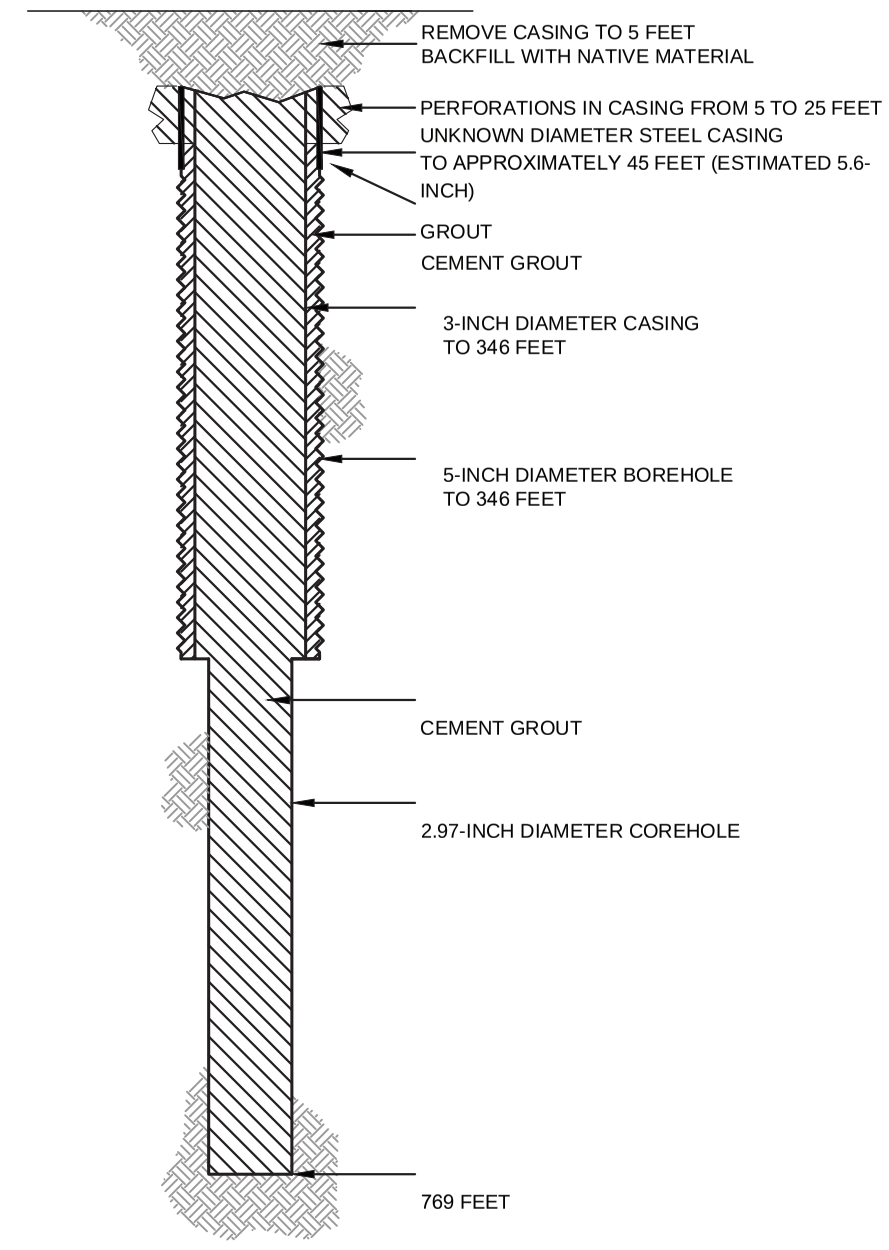

HALEY ALDRICH

FLORENCE COPPER, INC.
FLORENCE, ARIZONA

COREHOLE 336S DIAGRAM

FLORENCE COPPER INC.

NOT TO SCALE
SEPTEMBER 2019

FIGURE 1

MOBINI, GITA Printed: 4/21/2017 12:00 PM Layout: ABANDON (2)
G:\PROJECTS\CURIS RESOURCES\38706-CURIS FEASIBILITY\DRAWINGS\EPA\WELL ABANDON\415S_ABANDON.DWG

OMB No. 2040-0042 Approval Expires 4/30/2022

United States Environmental Protection Agency

EPA

WELL REWORK RECORD, PLUGGING AND ABANDONMENT PLAN, OR PLUGGING AND ABANDONMENT AFFIDAVIT

Name and Address, Phone Number and/or Email of Permittee

Florence Copper Project
1575 W Hunt Hwy,
Florence, AZ 85132

Permit or EPA ID Number	API Number	Full Well Name
R9UIC-AZ3-FY11-1		339S

State	County
Arizona	Pinal

Locate well in two directions from nearest lines of quarter section and drilling unit

Surface Location

NE 1/4 of SE 1/4 of Section 28 Township 4S Range 9E

Latitude 33.05270206

Longitude -111.4236132

ft. from (N/S) Line of quarter section

ft. from (E/W) Line of quarter section.

Well Class	Timing of Action (pick one)	Type of Action (pick one)
☐ Class I ☐ Class II ☑ Class III ☐ Class V	☑ Notice Prior to Work Date Expected to Commence March 2021 ☐ Report After Work Date Work Ended	☐ Well Rework ☑ Plugging and Abandonment ☐ Conversion to a Non-Injection Well

Provide a narrative description of the work planned to be performed, or that was performed. Use additional pages as necessary. See instructions.

A workover rig capable of performing the required abandonment operations at the required depths will be moved in and set up over the core hole. The core hole will be inspected to determine the depth to which the hole remains open and if any obstructions are present in the core hole; the presence and condition of any existing collar will also be documented. If necessary, the core hole will be cleaned out to a depth of at least 100 feet below the bedrock-LBFU contact to enable placement of cement seals.

If collar is present, an attempt will be made to remove it. If removal of the collar is not feasible, it will be left in the hole and perforated as needed to allow an annular seal to be placed to a depth of at least 25 feet bgs. In areas of agricultural use, the surface casing will be cut at least 5 feet bgs and removed.

If the collar cannot be removed, it will be perforated from at least 20 feet below the bedrock-LBFU contact to at least 20 feet above the contact; from at least 20 feet below the base of the MFGU to at least 20 feet above the top of the MFGU; and from at least 25 feet bgs to 5 feet bgs.

A tremie pipe will be used to place Type V cement in the open core hole from the bottom of the core hole to the top of the core hole. Cement retainers, as described above, will be used to force cement grout into the annulus and behind perforated intervals, as necessary.

If the hole has been obstructed, as much cement as possible will be placed from 100 feet below the LBFU-bedrock contact to the top of the core hole.

The volume of Type V cement will be recorded and will not be less than the estimated volume of material required to fill each interval. All cement grout will consist of Type V cement, or equivalent approved in accordance with the UIC Permit.

Certification

I certify under the penalty of law that I have personally examined and am familiar with the information submitted in this document and all attachments and that, based on my inquiry of those individuals immediately responsible for obtaining the information, I believe that the information is true, accurate, and complete. I am aware that there are significant penalties for submitting false information, including the possibliity of fine and imprisonment. (Ref. 40 CFR § 144.32)

Name and Official Title *(Please type or print)*	Signature	Date Signed
Dan Johnson, VP - General Manager		10/3/2019

INSTRUCTIONS FOR FORM 7520-19

This form replaces forms 7520-12 and 7520-14. Use this form only when work is planned or has occurred that affects the well's construction or operation as an injection well, including work on the casing, tubing or packer (or for shallow Class V wells, the subsurface fluid emplacement network). Use one form per injection well. While reports or other information developed by contractors or service companies may be attached, this form must be signed by a responsible entity as described at 40 CFR 144.32. Note: operators closing Class V wells should use Form 7520-17.

NAME, ADDRESS, PHONE AND/OR EMAIL OF PERMITTEE: Enter the name and street address, city/town, state, and ZIP code of the permittee. Also provide an email address (if available) and/or a phone number.

PERMIT OR EPA ID NUMBER: Enter the well identification number or permit number assigned to the well by the EPA or the permitting authority.

API NUMBER: Enter the number assigned by the local jurisdiction (usually a State Oil and Gas Agency) using the American Petroleum Institute standard numbering system.

FULL WELL NAME: Enter the full name of the well or project.

Enter the **STATE** and **COUNTY** where the well is located. For States that do not have counties, use the name of that State's equivalent jurisdiction at a more local level.

WELL LOCATION: Fill in the complete township, range, and section to the nearest quarter-quarter section. A township is north or south of the baseline, and a range is east or west of the principal meridian (e.g., T12N, R34W). Also include the distance, in feet, from the nearest north or south line and nearest east or west line of the quarter-section. Also, enter the **latitude** and **longitude** of the well in decimal degrees, to five or six places if possible; be sure to include a negative sign for the longitude of a well in the Western Hemisphere and a negative sign for the latitude of a well in the Southern Hemisphere.

Enter the **WELL CLASS,** i.e., the class of injection well as defined in 40 CFR 144.6.

TIMING OF THE ACTION: Check ***Notice prior to work*** if the activity has not yet occurred (i.e., is planned). Check ***Report after work*** if the activity described has already occurred. As appropriate, include the date the activity is expected to start or the date the activity was completed. (Note this may not be available, e.g., for a plugging plan submitted with a permit application.)

TYPE OF ACTION: Check the appropriate box to describe the kind of activity being reported. Check ***Well Rework*** for work that was/will be performed on the well after it has already been in operation as an injection well. Check ***Plugging and Abandonment*** to report on plans for or descriptions of final closure/plugging after use as an injection well. Check ***Conversion to a Non-Injection Well*** if the well is to be converted to something other than an injection well.

Provide a **NARRATIVE DESCRIPTION** of the work planned to be performed, or that was performed. The narrative should include a description of the main procedures planned or that occurred during the work activity. A service company report, daily report, or similar document may be attached if it includes all the requested information and is clear and legible.

For well reworks, include the following information: The reason for the well rework; depths of activity; type of activity; changes to injection well configuration, well casing, or cement behind casing; any plug added to the well and its depth; any newly drilled interval and its depth; method(s) to demonstrate that the well has mechanical integrity (as applicable); and any deviations from the approved rework plan (as applicable).

For a well plugging plan, include the following information: Reason for the well plugging; number of plugs placed, and their depths; materials used as plugs (e.g., cast iron bridge plug, cement, cement retainer); method to set plugs; and wait-on-cement times, if any. Also provide one or more cost estimates from an independent firm in the business of plugging and abandoning wells to plug the well as described in the plan.

For well plugging affidavit, include the following information: Reason for the well plugging; number of plugs placed, and their depths; materials used as plugs (e.g., cast iron bridge plug, cement, cement retainer); method to set plugs; wait-on-cement times, if any; and any deviations from the approved plugging plan (if applicable).

For conversion to a non-injection well, include the following information: Depths of activity; type of activity; changes to injection well configuration, well casing, or cement behind casing; any plug added to the well and its depth; any newly drilled interval and its depth; depths of new perforations; and method(s) to demonstrate that the well has mechanical integrity (as applicable).

For all of the above activities, include a well sketch depicting the work, results of well tests/logging performed, service company tickets, and any other available information demonstrating how the work was/is to be performed. Also, specify whether depths are below ground surface, relative to Kelly bushing, etc.

CERTIFICATION: This form must be signed and dated by either: a responsible corporate officer for a corporation, by a general partner for a partnership, by the proprietor of a sole proprietorship, or by a principal executive or ranking elected official for a public agency.

PAPERWORK REDUCTION ACT NOTICE: The public reporting and recordkeeping burden for this collection of information is estimated to average between 6.0 and 7.9 hours per response, depending on the injection well class. Burden means the total time, effort, or financial resource expended by persons to generate, maintain, retain, or disclose or provide information to or for a Federal Agency. This includes the time needed to review instructions; develop, acquire, install, and utilize technology and systems for the purposes of collecting, validating, and verifying information, processing and maintaining information, and disclosing and providing information; adjust the existing ways to comply with any previously applicable instructions and requirements; train personnel to be able to respond to the collection of information; search data sources; complete and review the collection of information; and, transmit or otherwise disclose the information. An agency may not conduct or sponsor, and a person is not required to respond to, a collection of information unless it displays a currently valid OMB control number. Send comments on the Agency's need for this information, the accuracy of the provided burden estimates, and any suggested methods for minimizing respondent burden, including the use of automated collection techniques to Director, Collection Strategies Division, U.S. Environmental Protection Agency (2822), 1200 Pennsylvania Ave., NW., Washington, D.C. 20460. Include the OMB control number in any correspondence. Do not send the completed forms to this address.

AS-BUILT COREHOLE 339S

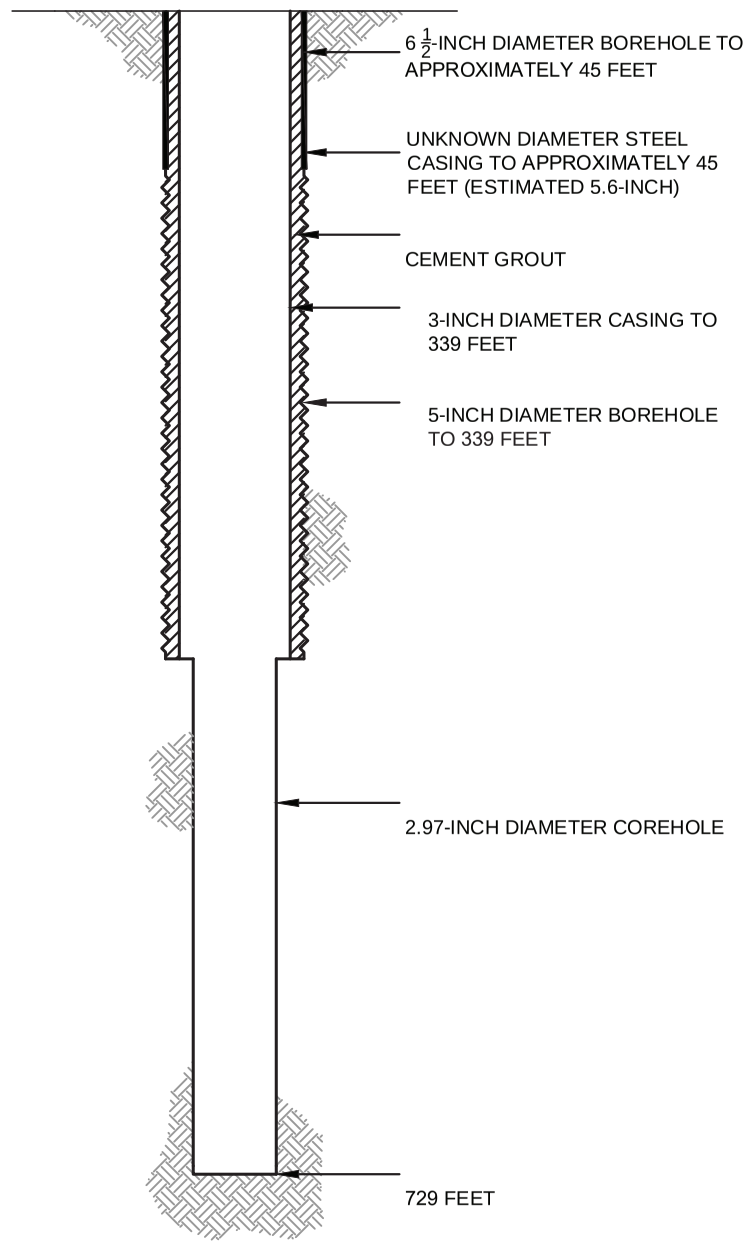

PROPOSED PLUGGING AND ABANDONMENT COREHOLE 339S

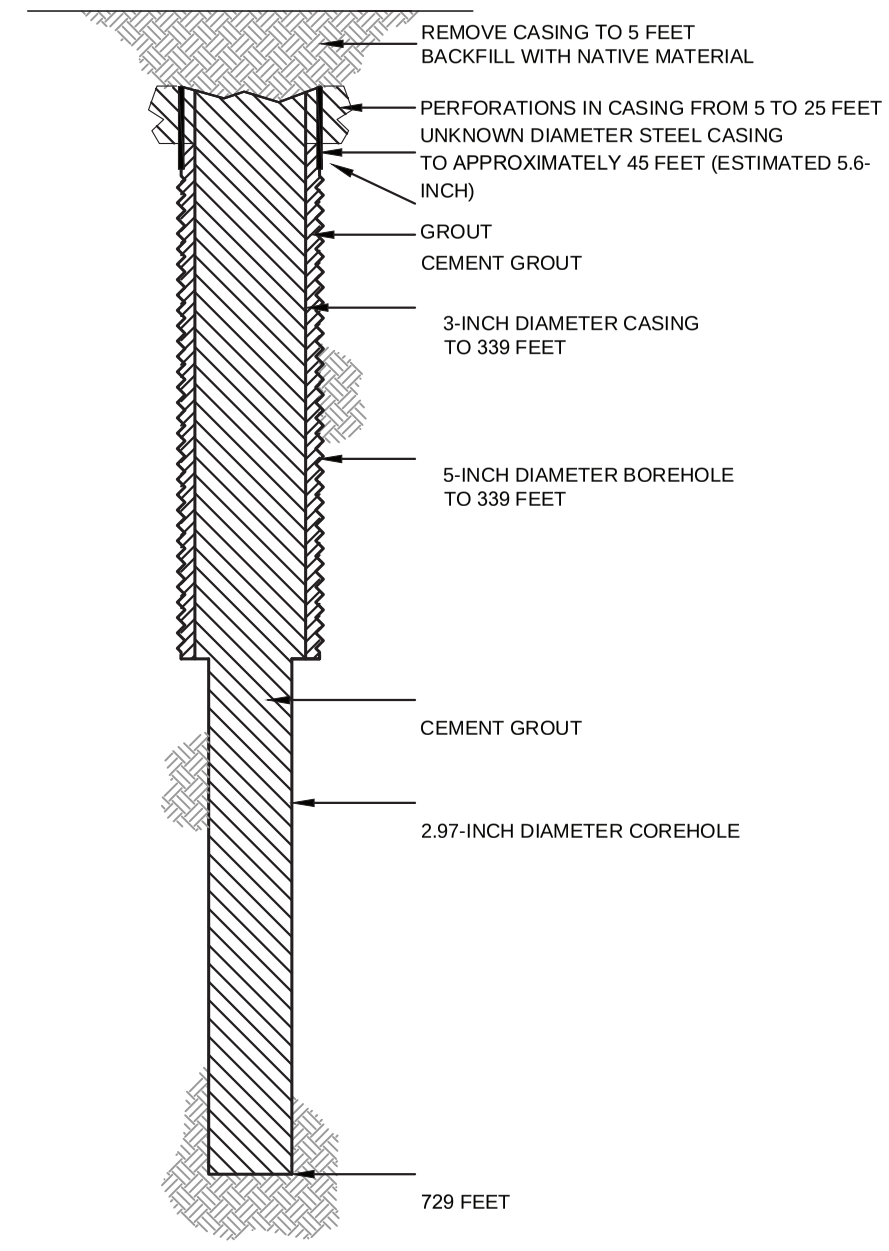

HALEY ALDRICH

FLORENCE COPPER, INC.
FLORENCE, ARIZONA

COREHOLE 339S DIAGRAM

FLORENCE COPPER INC.

NOT TO SCALE
SEPTEMBER 2019

FIGURE 1

MOBINI, GITA Printed: 4/21/2017 12:00 PM Layout: ABANDON (2)
G:\PROJECTS\CURIS RESOURCES\38706-CURIS FEASIBILITY\DRAWINGS\EPA\WELL ABANDON\415S_ABANDON.DWG

OMB No. 2040-0042 Approval Expires 4/30/2022

United States Environmental Protection Agency

WELL REWORK RECORD, PLUGGING AND ABANDONMENT PLAN, OR PLUGGING AND ABANDONMENT AFFIDAVIT

Name and Address, Phone Number and/or Email of Permittee

Florence Copper Project
1575 W Hunt Hwy,
Florence, AZ 85132

Permit or EPA ID Number	API Number	Full Well Name
R9UIC-AZ3-FY11-1		340S

State	County
Arizona	Pinal

Locate well in two directions from nearest lines of quarter section and drilling unit

Latitude 33.05270528

Longitude -111.4244291

Surface Location

NE **1/4 of** SE **1/4 of Section** 28 **Township** 4S **Range** 9E

_____ **ft. from (N/S)** _____ **Line of quarter section**

_____ **ft. from (E/W)** _____ **Line of quarter section.**

Well Class	Timing of Action (pick one)	Type of Action (pick one)
☐ Class I ☐ Class II ☑ Class III ☐ Class V	☑ Notice Prior to Work Date Expected to Commence March 2021 ☐ Report After Work Date Work Ended	☐ Well Rework ☑ Plugging and Abandonment ☐ Conversion to a Non-Injection Well

Provide a narrative description of the work planned to be performed, or that was performed. Use additional pages as necessary. See instructions.

A workover rig capable of performing the required abandonment operations at the required depths will be moved in and set up over the core hole. The core hole will be inspected to determine the depth to which the hole remains open and if any obstructions are present in the core hole; the presence and condition of any existing collar will also be documented. If necessary, the core hole will be cleaned out to a depth of at least 100 feet below the bedrock-LBFU contact to enable placement of cement seals.

If collar is present, an attempt will be made to remove it. If removal of the collar is not feasible, it will be left in the hole and perforated as needed to allow an annular seal to be placed to a depth of at least 25 feet bgs. In areas of agricultural use, the surface casing will be cut at least 5 feet bgs and removed.

If the collar cannot be removed, it will be perforated from at least 20 feet below the bedrock-LBFU contact to at least 20 feet above the contact; from at least 20 feet below the base of the MFGU to at least 20 feet above the top of the MFGU; and from at least 25 feet bgs to 5 feet bgs.

A tremie pipe will be used to place Type V cement in the open core hole from the bottom of the core hole to the top of the core hole. Cement retainers, as described above, will be used to force cement grout into the annulus and behind perforated intervals, as necessary.

If the hole has been obstructed, as much cement as possible will be placed from 100 feet below the LBFU-bedrock contact to the top of the core hole.

The volume of Type V cement will be recorded and will not be less than the estimated volume of material required to fill each interval. All cement grout will consist of Type V cement, or equivalent approved in accordance with the UIC Permit.

Certification

I certify under the penalty of law that I have personally examined and am familiar with the information submitted in this document and all attachments and that, based on my inquiry of those individuals immediately responsible for obtaining the information, I believe that the information is true, accurate, and complete. I am aware that there are significant penalties for submitting false information, including the possibliity of fine and imprisonment. (Ref. 40 CFR § 144.32)

Name and Official Title *(Please type or print)*	Signature	Date Signed
Dan Johnson, VP - General Manager		10/3/2019

INSTRUCTIONS FOR FORM 7520-19

This form replaces forms 7520-12 and 7520-14. Use this form only when work is planned or has occurred that affects the well's construction or operation as an injection well, including work on the casing, tubing or packer (or for shallow Class V wells, the subsurface fluid emplacement network). Use one form per injection well. While reports or other information developed by contractors or service companies may be attached, this form must be signed by a responsible entity as described at 40 CFR 144.32. Note: operators closing Class V wells should use Form 7520-17.

NAME, ADDRESS, PHONE AND/OR EMAIL OF PERMITTEE: Enter the name and street address, city/town, state, and ZIP code of the permittee. Also provide an email address (if available) and/or a phone number.

PERMIT OR EPA ID NUMBER: Enter the well identification number or permit number assigned to the well by the EPA or the permitting authority.

API NUMBER: Enter the number assigned by the local jurisdiction (usually a State Oil and Gas Agency) using the American Petroleum Institute standard numbering system.

FULL WELL NAME: Enter the full name of the well or project.

Enter the **STATE** and **COUNTY** where the well is located. For States that do not have counties, use the name of that State's equivalent jurisdiction at a more local level.

WELL LOCATION: Fill in the complete township, range, and section to the nearest quarter-quarter section. A township is north or south of the baseline, and a range is east or west of the principal meridian (e.g., T12N, R34W). Also include the distance, in feet, from the nearest north or south line and nearest east or west line of the quarter-section. Also, enter the **latitude** and **longitude** of the well in decimal degrees, to five or six places if possible; be sure to include a negative sign for the longitude of a well in the Western Hemisphere and a negative sign for the latitude of a well in the Southern Hemisphere.

Enter the **WELL CLASS,** i.e., the class of injection well as defined in 40 CFR 144.6.

TIMING OF THE ACTION: Check ***Notice prior to work*** if the activity has not yet occurred (i.e., is planned). Check ***Report after work*** if the activity described has already occurred. As appropriate, include the date the activity is expected to start or the date the activity was completed. (Note this may not be available, e.g., for a plugging plan submitted with a permit application.)

TYPE OF ACTION: Check the appropriate box to describe the kind of activity being reported. Check ***Well Rework*** for work that was/will be performed on the well after it has already been in operation as an injection well. Check ***Plugging and Abandonment*** to report on plans for or descriptions of final closure/plugging after use as an injection well. Check ***Conversion to a Non-Injection Well*** if the well is to be converted to something other than an injection well.

Provide a **NARRATIVE DESCRIPTION** of the work planned to be performed, or that was performed. The narrative should include a description of the main procedures planned or that occurred during the work activity. A service company report, daily report, or similar document may be attached if it includes all the requested information and is clear and legible.

For well reworks, include the following information: The reason for the well rework; depths of activity; type of activity; changes to injection well configuration, well casing, or cement behind casing; any plug added to the well and its depth; any newly drilled interval and its depth; method(s) to demonstrate that the well has mechanical integrity (as applicable); and any deviations from the approved rework plan (as applicable).

For a well plugging plan, include the following information: Reason for the well plugging; number of plugs placed, and their depths; materials used as plugs (e.g., cast iron bridge plug, cement, cement retainer); method to set plugs; and wait-on-cement times, if any. Also provide one or more cost estimates from an independent firm in the business of plugging and abandoning wells to plug the well as described in the plan.

For well plugging affidavit, include the following information: Reason for the well plugging; number of plugs placed, and their depths; materials used as plugs (e.g., cast iron bridge plug, cement, cement retainer); method to set plugs; wait-on-cement times, if any; and any deviations from the approved plugging plan (if applicable).

For conversion to a non-injection well, include the following information: Depths of activity; type of activity; changes to injection well configuration, well casing, or cement behind casing; any plug added to the well and its depth; any newly drilled interval and its depth; depths of new perforations; and method(s) to demonstrate that the well has mechanical integrity (as applicable).

For all of the above activities, include a well sketch depicting the work, results of well tests/logging performed, service company tickets, and any other available information demonstrating how the work was/is to be performed. Also, specify whether depths are below ground surface, relative to Kelly bushing, etc.

CERTIFICATION: This form must be signed and dated by either: a responsible corporate officer for a corporation, by a general partner for a partnership, by the proprietor of a sole proprietorship, or by a principal executive or ranking elected official for a public agency.

PAPERWORK REDUCTION ACT NOTICE: The public reporting and recordkeeping burden for this collection of information is estimated to average between 6.0 and 7.9 hours per response, depending on the injection well class. Burden means the total time, effort, or financial resource expended by persons to generate, maintain, retain, or disclose or provide information to or for a Federal Agency. This includes the time needed to review instructions; develop, acquire, install, and utilize technology and systems for the purposes of collecting, validating, and verifying information, processing and maintaining information, and disclosing and providing information; adjust the existing ways to comply with any previously applicable instructions and requirements; train personnel to be able to respond to the collection of information; search data sources; complete and review the collection of information; and, transmit or otherwise disclose the information. An agency may not conduct or sponsor, and a person is not required to respond to, a collection of information unless it displays a currently valid OMB control number. Send comments on the Agency's need for this information, the accuracy of the provided burden estimates, and any suggested methods for minimizing respondent burden, including the use of automated collection techniques to Director, Collection Strategies Division, U.S. Environmental Protection Agency (2822), 1200 Pennsylvania Ave., NW., Washington, D.C. 20460. Include the OMB control number in any correspondence. Do not send the completed forms to this address.

AS-BUILT COREHOLE 340S

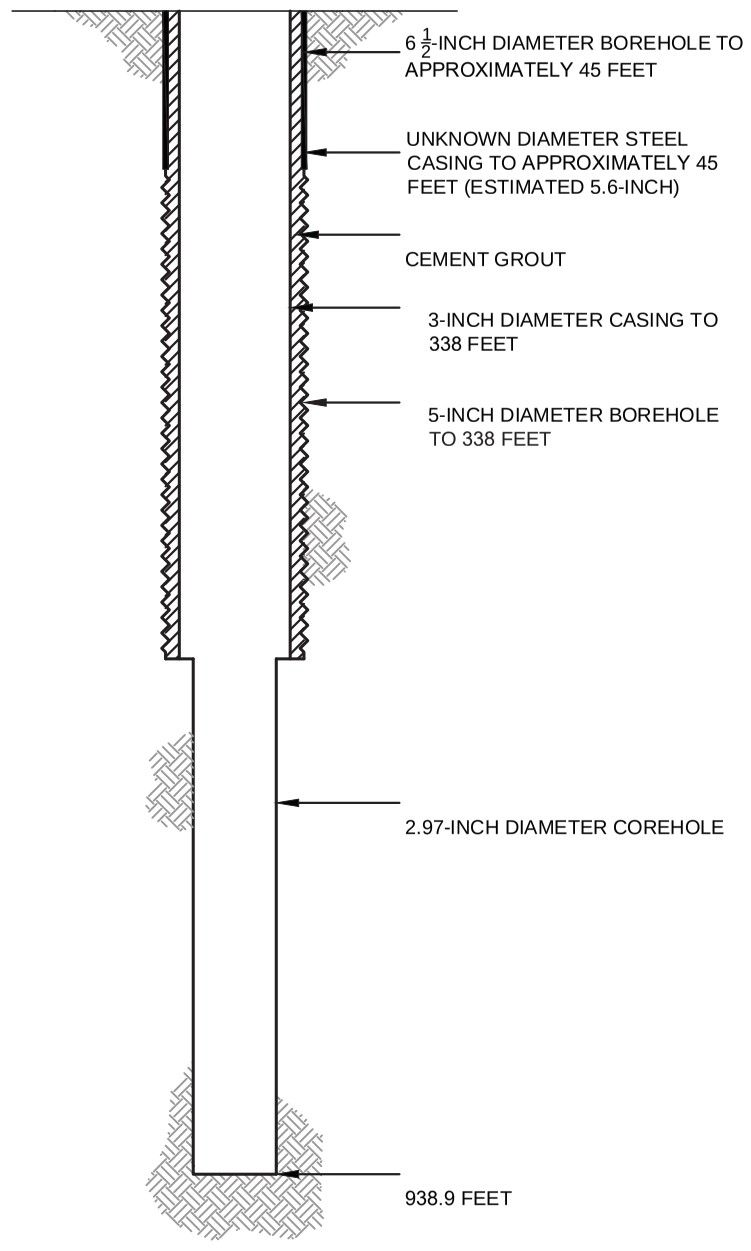

PROPOSED PLUGGING AND ABANDONMENT COREHOLE 340S

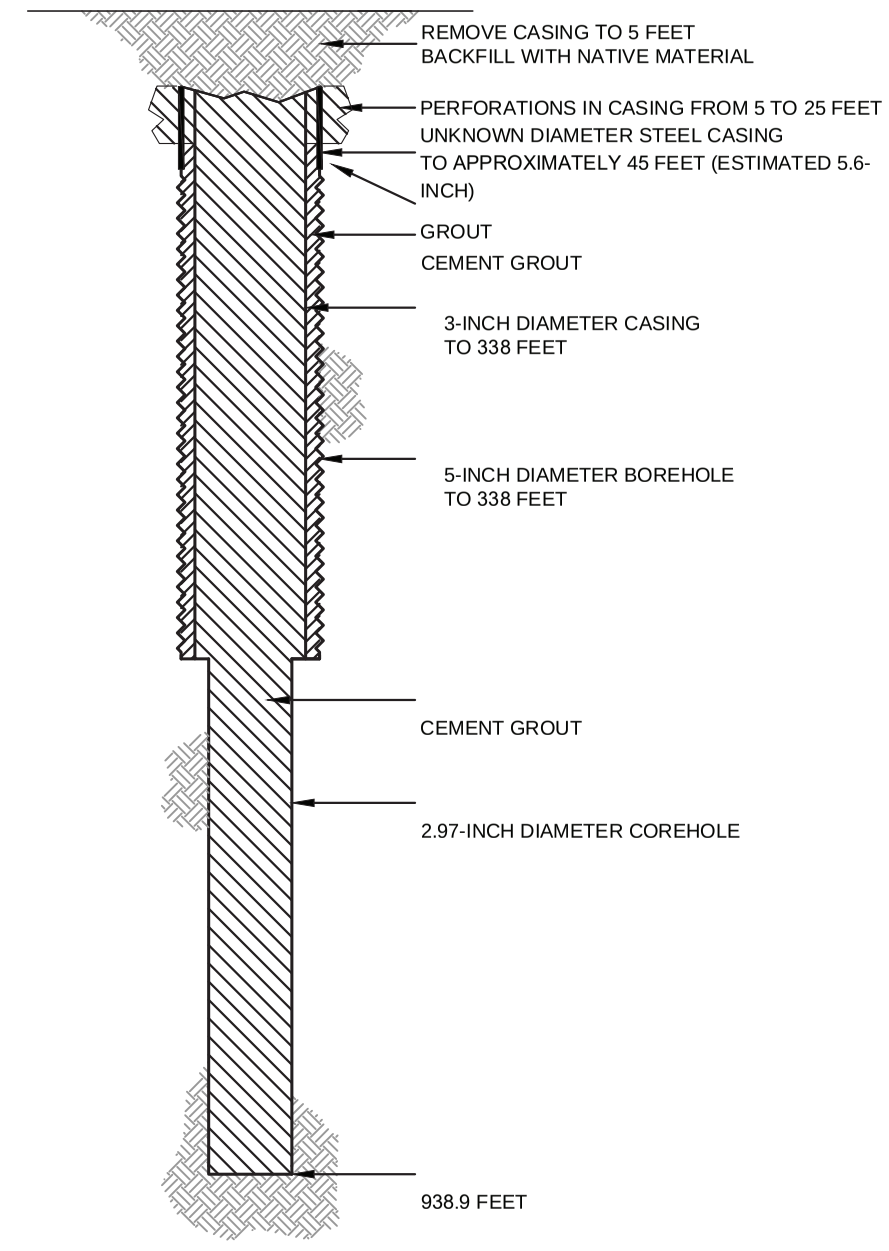

HALEY ALDRICH

FLORENCE COPPER, INC.
FLORENCE, ARIZONA

COREHOLE 340S DIAGRAM

FLORENCE COPPER INC.

NOT TO SCALE
SEPTEMBER 2019

FIGURE 1

MOBINI, GITA Printed: 4/21/2017 12:00 PM Layout: ABANDON (2)
G:\PROJECTS\CURIS RESOURCES\38706-CURIS FEASIBILITY\DRAWINGS\EPA\WELL ABANDON\415S_ABANDON.DWG

OMB No. 2040-0042 Approval Expires 4/30/2022

United States Environmental Protection Agency

WELL REWORK RECORD, PLUGGING AND ABANDONMENT PLAN, OR PLUGGING AND ABANDONMENT AFFIDAVIT

Name and Address, Phone Number and/or Email of Permittee

Florence Copper Project
1575 W Hunt Hwy,
Florence, AZ 85132

Permit or EPA ID Number	API Number	Full Well Name
R9UIC-AZ3-FY11-1		341S

State	County
Arizona	Pinal

Locate well in two directions from nearest lines of quarter section and drilling unit

Latitude 33.0527085

Longitude -111.425245

Surface Location

NE **1/4 of** SE **1/4 of Section** 28 **Township** 4S **Range** 9E

_____ **ft. from (N/S)** _____ **Line of quarter section**

_____ **ft. from (E/W)** _____ **Line of quarter section.**

Well Class	Timing of Action (pick one)	Type of Action (pick one)
☐ Class I ☐ Class II ☑ Class III ☐ Class V	☑ Notice Prior to Work Date Expected to Commence March 2021 ☐ Report After Work Date Work Ended	☐ Well Rework ☑ Plugging and Abandonment ☐ Conversion to a Non-Injection Well

Provide a narrative description of the work planned to be performed, or that was performed. Use additional pages as necessary. See instructions.

A workover rig capable of performing the required abandonment operations at the required depths will be moved in and set up over the core hole. The core hole will be inspected to determine the depth to which the hole remains open and if any obstructions are present in the core hole; the presence and condition of any existing collar will also be documented. If necessary, the core hole will be cleaned out to a depth of at least 100 feet below the bedrock-LBFU contact to enable placement of cement seals.

If collar is present, an attempt will be made to remove it. If removal of the collar is not feasible, it will be left in the hole and perforated as needed to allow an annular seal to be placed to a depth of at least 25 feet bgs. In areas of agricultural use, the surface casing will be cut at least 5 feet bgs and removed.

If the collar cannot be removed, it will be perforated from at least 20 feet below the bedrock-LBFU contact to at least 20 feet above the contact; from at least 20 feet below the base of the MFGU to at least 20 feet above the top of the MFGU; and from at least 25 feet bgs to 5 feet bgs.

A tremie pipe will be used to place Type V cement in the open core hole from the bottom of the core hole to the top of the core hole. Cement retainers, as described above, will be used to force cement grout into the annulus and behind perforated intervals, as necessary.

If the hole has been obstructed, as much cement as possible will be placed from 100 feet below the LBFU-bedrock contact to the top of the core hole.

The volume of Type V cement will be recorded and will not be less than the estimated volume of material required to fill each interval. All cement grout will consist of Type V cement, or equivalent approved in accordance with the UIC Permit.

Certification

I certify under the penalty of law that I have personally examined and am familiar with the information submitted in this document and all attachments and that, based on my inquiry of those individuals immediately responsible for obtaining the information, I believe that the information is true, accurate, and complete. I am aware that there are significant penalties for submitting false information, including the possibliity of fine and imprisonment. (Ref. 40 CFR § 144.32)

Name and Official Title *(Please type or print)*	Signature	Date Signed
Dan Johnson, VP - General Manager		10/3/2019

INSTRUCTIONS FOR FORM 7520-19

This form replaces forms 7520-12 and 7520-14. Use this form only when work is planned or has occurred that affects the well's construction or operation as an injection well, including work on the casing, tubing or packer (or for shallow Class V wells, the subsurface fluid emplacement network). Use one form per injection well. While reports or other information developed by contractors or service companies may be attached, this form must be signed by a responsible entity as described at 40 CFR 144.32. Note: operators closing Class V wells should use Form 7520-17.

NAME, ADDRESS, PHONE AND/OR EMAIL OF PERMITTEE: Enter the name and street address, city/town, state, and ZIP code of the permittee. Also provide an email address (if available) and/or a phone number.

PERMIT OR EPA ID NUMBER: Enter the well identification number or permit number assigned to the well by the EPA or the permitting authority.

API NUMBER: Enter the number assigned by the local jurisdiction (usually a State Oil and Gas Agency) using the American Petroleum Institute standard numbering system.

FULL WELL NAME: Enter the full name of the well or project.

Enter the **STATE** and **COUNTY** where the well is located. For States that do not have counties, use the name of that State's equivalent jurisdiction at a more local level.

WELL LOCATION: Fill in the complete township, range, and section to the nearest quarter-quarter section. A township is north or south of the baseline, and a range is east or west of the principal meridian (e.g., T12N, R34W). Also include the distance, in feet, from the nearest north or south line and nearest east or west line of the quarter-section. Also, enter the **latitude** and **longitude** of the well in decimal degrees, to five or six places if possible; be sure to include a negative sign for the longitude of a well in the Western Hemisphere and a negative sign for the latitude of a well in the Southern Hemisphere.

Enter the **WELL CLASS,** i.e., the class of injection well as defined in 40 CFR 144.6.

TIMING OF THE ACTION: Check ***Notice prior to work*** if the activity has not yet occurred (i.e., is planned). Check ***Report after work*** if the activity described has already occurred. As appropriate, include the date the activity is expected to start or the date the activity was completed. (Note this may not be available, e.g., for a plugging plan submitted with a permit application.)

TYPE OF ACTION: Check the appropriate box to describe the kind of activity being reported. Check ***Well Rework*** for work that was/will be performed on the well after it has already been in operation as an injection well. Check ***Plugging and Abandonment*** to report on plans for or descriptions of final closure/plugging after use as an injection well. Check ***Conversion to a Non-Injection Well*** if the well is to be converted to something other than an injection well.

Provide a **NARRATIVE DESCRIPTION** of the work planned to be performed, or that was performed. The narrative should include a description of the main procedures planned or that occurred during the work activity. A service company report, daily report, or similar document may be attached if it includes all the requested information and is clear and legible.

For well reworks, include the following information: The reason for the well rework; depths of activity; type of activity; changes to injection well configuration, well casing, or cement behind casing; any plug added to the well and its depth; any newly drilled interval and its depth; method(s) to demonstrate that the well has mechanical integrity (as applicable); and any deviations from the approved rework plan (as applicable).

For a well plugging plan, include the following information: Reason for the well plugging; number of plugs placed, and their depths; materials used as plugs (e.g., cast iron bridge plug, cement, cement retainer); method to set plugs; and wait-on-cement times, if any. Also provide one or more cost estimates from an independent firm in the business of plugging and abandoning wells to plug the well as described in the plan.

For well plugging affidavit, include the following information: Reason for the well plugging; number of plugs placed, and their depths; materials used as plugs (e.g., cast iron bridge plug, cement, cement retainer); method to set plugs; wait-on-cement times, if any; and any deviations from the approved plugging plan (if applicable).

For conversion to a non-injection well, include the following information: Depths of activity; type of activity; changes to injection well configuration, well casing, or cement behind casing; any plug added to the well and its depth; any newly drilled interval and its depth; depths of new perforations; and method(s) to demonstrate that the well has mechanical integrity (as applicable).

For all of the above activities, include a well sketch depicting the work, results of well tests/logging performed, service company tickets, and any other available information demonstrating how the work was/is to be performed. Also, specify whether depths are below ground surface, relative to Kelly bushing, etc.

CERTIFICATION: This form must be signed and dated by either: a responsible corporate officer for a corporation, by a general partner for a partnership, by the proprietor of a sole proprietorship, or by a principal executive or ranking elected official for a public agency.

PAPERWORK REDUCTION ACT NOTICE: The public reporting and recordkeeping burden for this collection of information is estimated to average between 6.0 and 7.9 hours per response, depending on the injection well class. Burden means the total time, effort, or financial resource expended by persons to generate, maintain, retain, or disclose or provide information to or for a Federal Agency. This includes the time needed to review instructions; develop, acquire, install, and utilize technology and systems for the purposes of collecting, validating, and verifying information, processing and maintaining information, and disclosing and providing information; adjust the existing ways to comply with any previously applicable instructions and requirements; train personnel to be able to respond to the collection of information; search data sources; complete and review the collection of information; and, transmit or otherwise disclose the information. An agency may not conduct or sponsor, and a person is not required to respond to, a collection of information unless it displays a currently valid OMB control number. Send comments on the Agency's need for this information, the accuracy of the provided burden estimates, and any suggested methods for minimizing respondent burden, including the use of automated collection techniques to Director, Collection Strategies Division, U.S. Environmental Protection Agency (2822), 1200 Pennsylvania Ave., NW., Washington, D.C. 20460. Include the OMB control number in any correspondence. Do not send the completed forms to this address.

AS-BUILT COREHOLE 341S

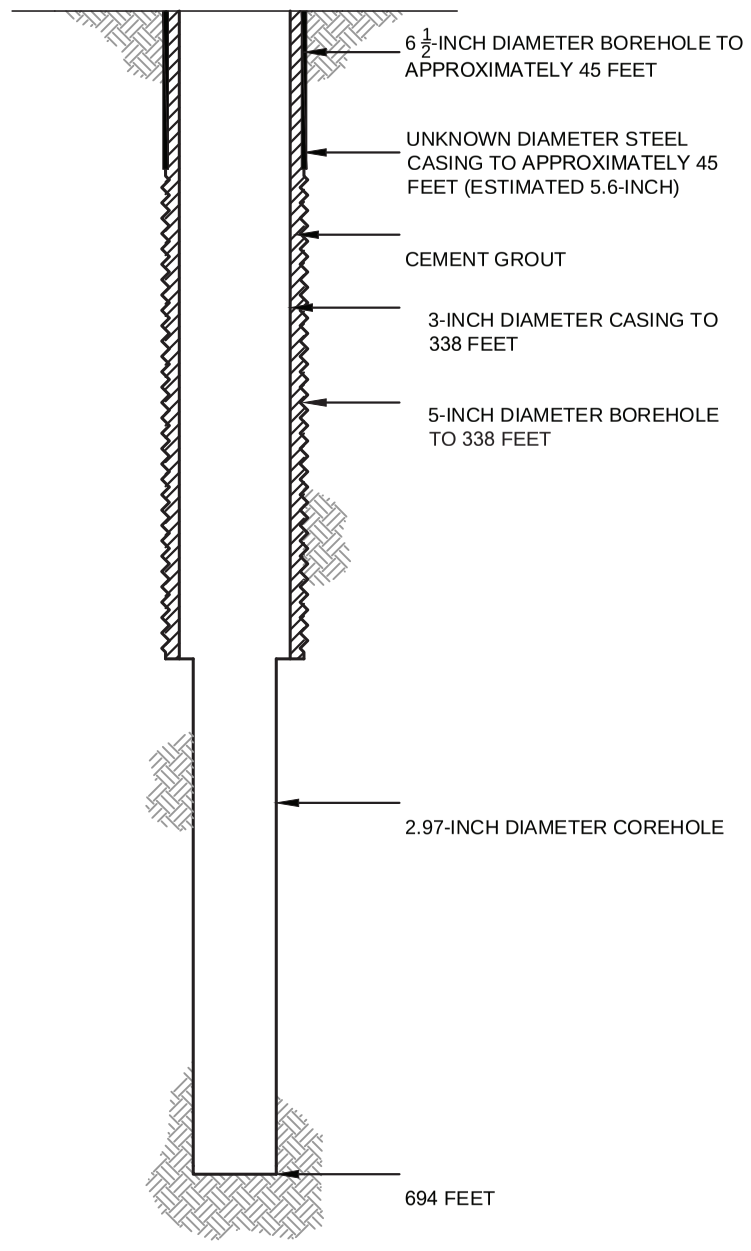

PROPOSED PLUGGING AND ABANDONMENT COREHOLE 341S

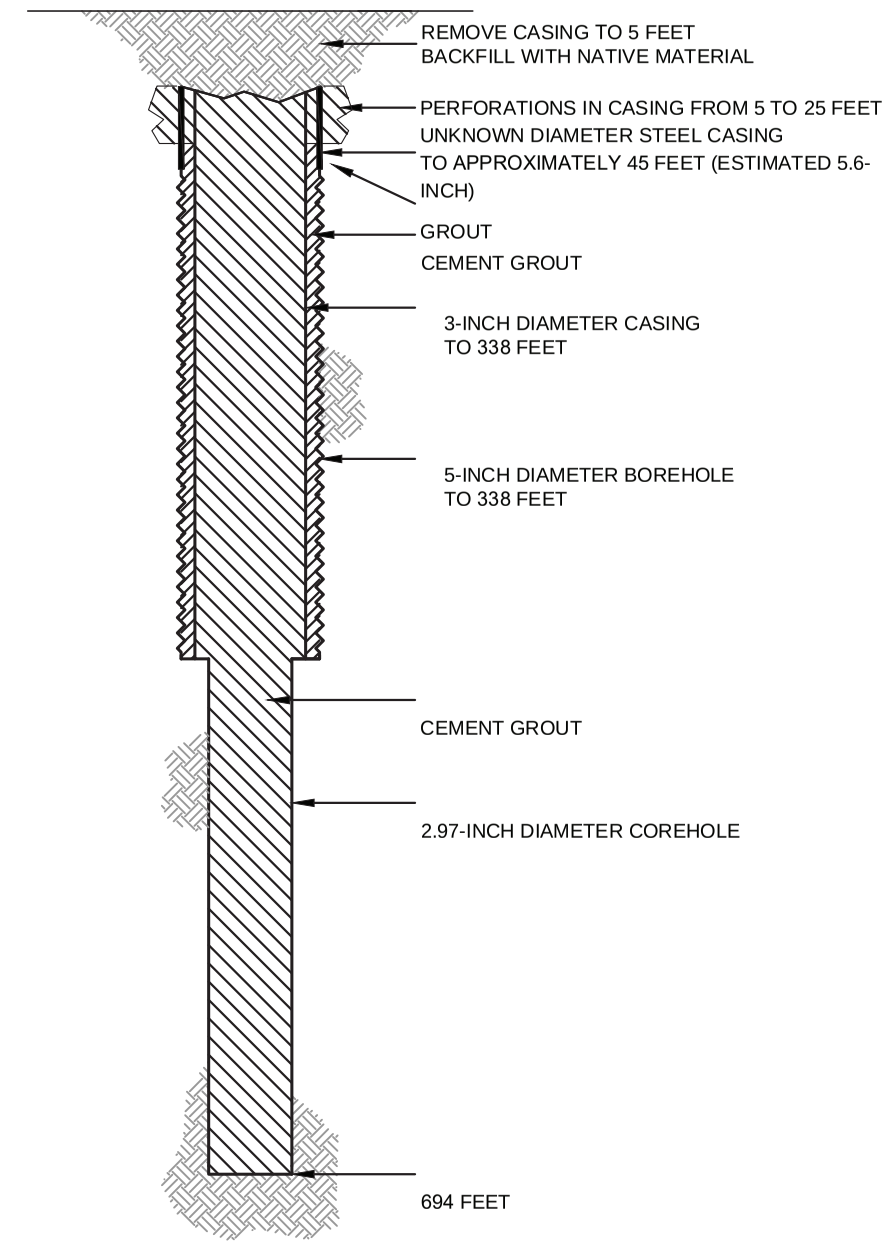

HALEY ALDRICH

FLORENCE COPPER, INC.
FLORENCE, ARIZONA

COREHOLE 341S DIAGRAM

FLORENCE COPPER INC.

NOT TO SCALE
SEPTEMBER 2019

FIGURE 1

MOBINI, GITA Printed: 4/21/2017 12:00 PM Layout: ABANDON (2)
G:\PROJECTS\CURIS RESOURCES\38706-CURIS FEASIBILITY\DRAWINGS\EPA\WELL ABANDON\415S_ABANDON.DWG

OMB No. 2040-0042 Approval Expires 4/30/2022

United States Environmental Protection Agency

WELL REWORK RECORD, PLUGGING AND ABANDONMENT PLAN, OR PLUGGING AND ABANDONMENT AFFIDAVIT

Name and Address, Phone Number and/or Email of Permittee

Florence Copper Project
1575 W Hunt Hwy,
Florence, AZ 85132

Permit or EPA ID Number	API Number	Full Well Name
R9UIC-AZ3-FY11-1		342S

State	County
Arizona	Pinal

Locate well in two directions from nearest lines of quarter section and drilling unit

Latitude 33.05271171

Longitude -111.4260609

Surface Location

NW **1/4 of** SE **1/4 of Section** 28 **Township** 4S **Range** 9E

_____ **ft. from (N/S)** _____ **Line of quarter section**

_____ **ft. from (E/W)** _____ **Line of quarter section.**

Well Class	Timing of Action (pick one)	Type of Action (pick one)
☐ Class I ☐ Class II ☑ Class III ☐ Class V	☑ Notice Prior to Work Date Expected to Commence March 2021 ☐ Report After Work Date Work Ended	☐ Well Rework ☑ Plugging and Abandonment ☐ Conversion to a Non-Injection Well

Provide a narrative description of the work planned to be performed, or that was performed. Use additional pages as necessary. See instructions.

A workover rig capable of performing the required abandonment operations at the required depths will be moved in and set up over the core hole. The core hole will be inspected to determine the depth to which the hole remains open and if any obstructions are present in the core hole; the presence and condition of any existing collar will also be documented. If necessary, the core hole will be cleaned out to a depth of at least 100 feet below the bedrock-LBFU contact to enable placement of cement seals.

If collar is present, an attempt will be made to remove it. If removal of the collar is not feasible, it will be left in the hole and perforated as needed to allow an annular seal to be placed to a depth of at least 25 feet bgs. In areas of agricultural use, the surface casing will be cut at least 5 feet bgs and removed.

If the collar cannot be removed, it will be perforated from at least 20 feet below the bedrock-LBFU contact to at least 20 feet above the contact; from at least 20 feet below the base of the MFGU to at least 20 feet above the top of the MFGU; and from at least 25 feet bgs to 5 feet bgs.

A tremie pipe will be used to place Type V cement in the open core hole from the bottom of the core hole to the top of the core hole. Cement retainers, as described above, will be used to force cement grout into the annulus and behind perforated intervals, as necessary.

If the hole has been obstructed, as much cement as possible will be placed from 100 feet below the LBFU-bedrock contact to the top of the core hole.

The volume of Type V cement will be recorded and will not be less than the estimated volume of material required to fill each interval. All cement grout will consist of Type V cement, or equivalent approved in accordance with the UIC Permit.

Certification

I certify under the penalty of law that I have personally examined and am familiar with the information submitted in this document and all attachments and that, based on my inquiry of those individuals immediately responsible for obtaining the information, I believe that the information is true, accurate, and complete. I am aware that there are significant penalties for submitting false information, including the possibliity of fine and imprisonment. (Ref. 40 CFR § 144.32)

Name and Official Title *(Please type or print)*	Signature	Date Signed
Dan Johnson, VP - General Manager		10/3/2019

INSTRUCTIONS FOR FORM 7520-19

This form replaces forms 7520-12 and 7520-14. Use this form only when work is planned or has occurred that affects the well's construction or operation as an injection well, including work on the casing, tubing or packer (or for shallow Class V wells, the subsurface fluid emplacement network). Use one form per injection well. While reports or other information developed by contractors or service companies may be attached, this form must be signed by a responsible entity as described at 40 CFR 144.32. Note: operators closing Class V wells should use Form 7520-17.

NAME, ADDRESS, PHONE AND/OR EMAIL OF PERMITTEE: Enter the name and street address, city/town, state, and ZIP code of the permittee. Also provide an email address (if available) and/or a phone number.

PERMIT OR EPA ID NUMBER: Enter the well identification number or permit number assigned to the well by the EPA or the permitting authority.

API NUMBER: Enter the number assigned by the local jurisdiction (usually a State Oil and Gas Agency) using the American Petroleum Institute standard numbering system.

FULL WELL NAME: Enter the full name of the well or project.

Enter the **STATE** and **COUNTY** where the well is located. For States that do not have counties, use the name of that State's equivalent jurisdiction at a more local level.

WELL LOCATION: Fill in the complete township, range, and section to the nearest quarter-quarter section. A township is north or south of the baseline, and a range is east or west of the principal meridian (e.g., T12N, R34W). Also include the distance, in feet, from the nearest north or south line and nearest east or west line of the quarter-section. Also, enter the **latitude** and **longitude** of the well in decimal degrees, to five or six places if possible; be sure to include a negative sign for the longitude of a well in the Western Hemisphere and a negative sign for the latitude of a well in the Southern Hemisphere.

Enter the **WELL CLASS,** i.e., the class of injection well as defined in 40 CFR 144.6.

TIMING OF THE ACTION: Check ***Notice prior to work*** if the activity has not yet occurred (i.e., is planned). Check ***Report after work*** if the activity described has already occurred. As appropriate, include the date the activity is expected to start or the date the activity was completed. (Note this may not be available, e.g., for a plugging plan submitted with a permit application.)

TYPE OF ACTION: Check the appropriate box to describe the kind of activity being reported. Check ***Well Rework*** for work that was/will be performed on the well after it has already been in operation as an injection well. Check ***Plugging and Abandonment*** to report on plans for or descriptions of final closure/plugging after use as an injection well. Check ***Conversion to a Non-Injection Well*** if the well is to be converted to something other than an injection well.

Provide a **NARRATIVE DESCRIPTION** of the work planned to be performed, or that was performed. The narrative should include a description of the main procedures planned or that occurred during the work activity. A service company report, daily report, or similar document may be attached if it includes all the requested information and is clear and legible.

For well reworks, include the following information: The reason for the well rework; depths of activity; type of activity; changes to injection well configuration, well casing, or cement behind casing; any plug added to the well and its depth; any newly drilled interval and its depth; method(s) to demonstrate that the well has mechanical integrity (as applicable); and any deviations from the approved rework plan (as applicable).

For a well plugging plan, include the following information: Reason for the well plugging; number of plugs placed, and their depths; materials used as plugs (e.g., cast iron bridge plug, cement, cement retainer); method to set plugs; and wait-on-cement times, if any. Also provide one or more cost estimates from an independent firm in the business of plugging and abandoning wells to plug the well as described in the plan.

For well plugging affidavit, include the following information: Reason for the well plugging; number of plugs placed, and their depths; materials used as plugs (e.g., cast iron bridge plug, cement, cement retainer); method to set plugs; wait-on-cement times, if any; and any deviations from the approved plugging plan (if applicable).

For conversion to a non-injection well, include the following information: Depths of activity; type of activity; changes to injection well configuration, well casing, or cement behind casing; any plug added to the well and its depth; any newly drilled interval and its depth; depths of new perforations; and method(s) to demonstrate that the well has mechanical integrity (as applicable).

For all of the above activities, include a well sketch depicting the work, results of well tests/logging performed, service company tickets, and any other available information demonstrating how the work was/is to be performed. Also, specify whether depths are below ground surface, relative to Kelly bushing, etc.

CERTIFICATION: This form must be signed and dated by either: a responsible corporate officer for a corporation, by a general partner for a partnership, by the proprietor of a sole proprietorship, or by a principal executive or ranking elected official for a public agency.

PAPERWORK REDUCTION ACT NOTICE: The public reporting and recordkeeping burden for this collection of information is estimated to average between 6.0 and 7.9 hours per response, depending on the injection well class. Burden means the total time, effort, or financial resource expended by persons to generate, maintain, retain, or disclose or provide information to or for a Federal Agency. This includes the time needed to review instructions; develop, acquire, install, and utilize technology and systems for the purposes of collecting, validating, and verifying information, processing and maintaining information, and disclosing and providing information; adjust the existing ways to comply with any previously applicable instructions and requirements; train personnel to be able to respond to the collection of information; search data sources; complete and review the collection of information; and, transmit or otherwise disclose the information. An agency may not conduct or sponsor, and a person is not required to respond to, a collection of information unless it displays a currently valid OMB control number. Send comments on the Agency's need for this information, the accuracy of the provided burden estimates, and any suggested methods for minimizing respondent burden, including the use of automated collection techniques to Director, Collection Strategies Division, U.S. Environmental Protection Agency (2822), 1200 Pennsylvania Ave., NW., Washington, D.C. 20460. Include the OMB control number in any correspondence. Do not send the completed forms to this address.

AS-BUILT COREHOLE 342S

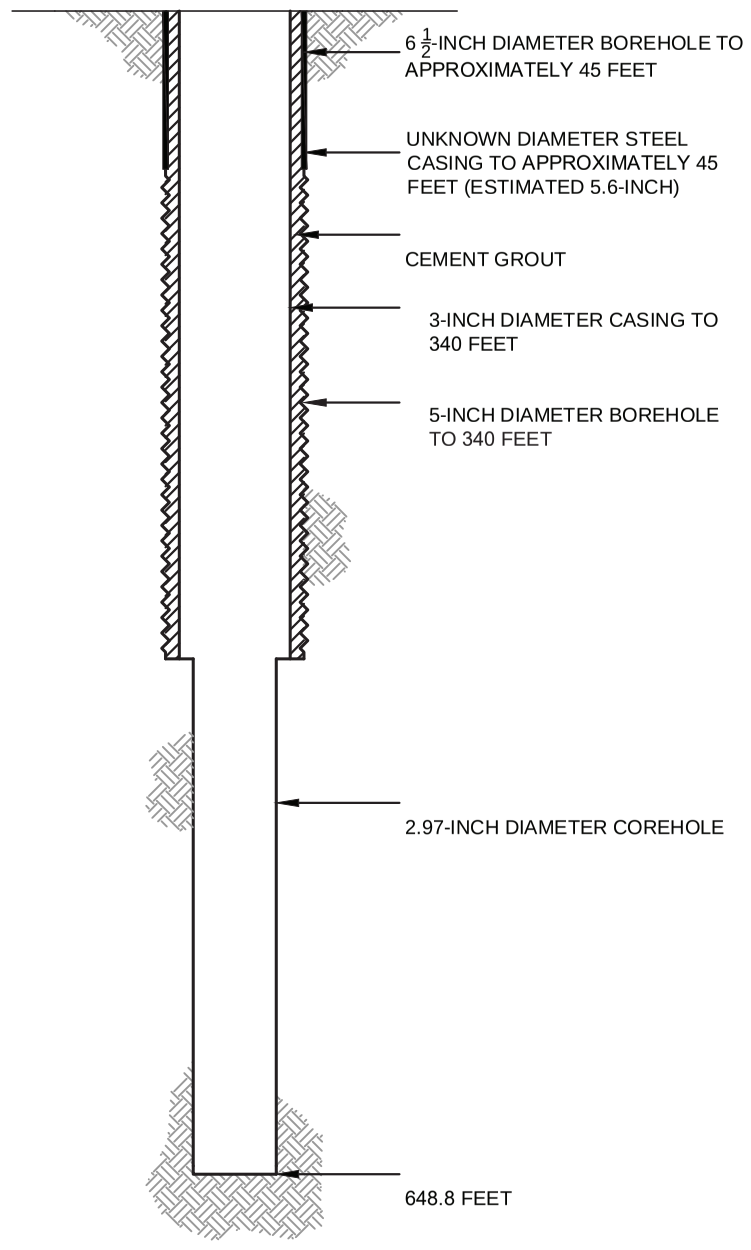

PROPOSED PLUGGING AND ABANDONMENT COREHOLE 342S

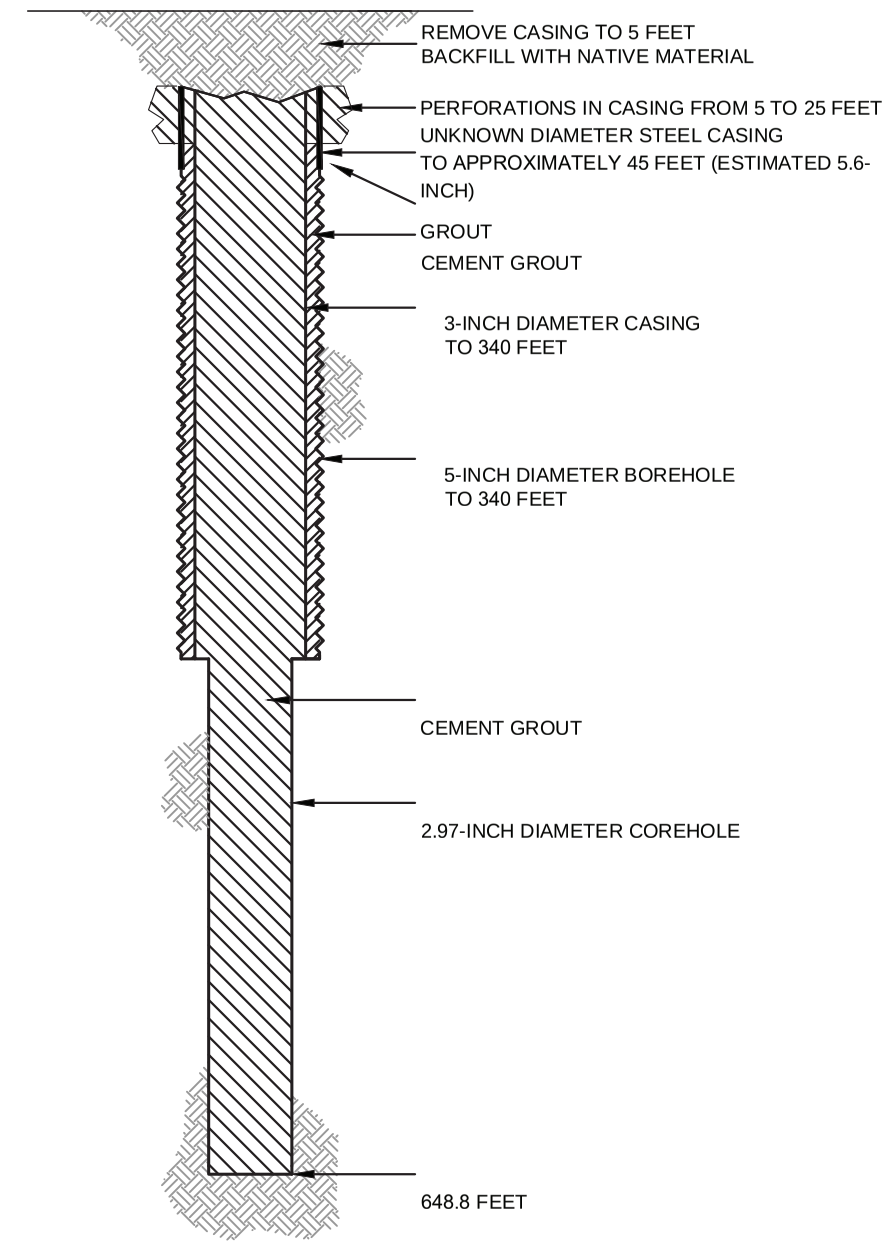

HALEY ALDRICH

FLORENCE COPPER, INC.
FLORENCE, ARIZONA

COREHOLE 342S DIAGRAM

FLORENCE COPPER INC.

NOT TO SCALE
SEPTEMBER 2019

FIGURE 1

MOBINI, GITA Printed: 4/21/2017 12:00 PM Layout: ABANDON (2)
G:\PROJECTS\CURIS RESOURCES\38706-CURIS FEASIBILITY\DRAWINGS\EPA\WELL ABANDON\415S_ABANDON.DWG

OMB No. 2040-0042 Approval Expires 4/30/2022

United States Environmental Protection Agency

WELL REWORK RECORD, PLUGGING AND ABANDONMENT PLAN, OR PLUGGING AND ABANDONMENT AFFIDAVIT

Name and Address, Phone Number and/or Email of Permittee

Florence Copper Project
1575 W Hunt Hwy,
Florence, AZ 85132

Permit or EPA ID Number	API Number	Full Well Name
R9UIC-AZ3-FY11-1		343S

State	County
Arizona	Pinal

Locate well in two directions from nearest lines of quarter section and drilling unit

Latitude 33.05271492

Surface Location

NW **1/4 of** SE **1/4 of Section** 28 **Township** 4S **Range** 9E

Longitude -111.4268768

_____ **ft. from (N/S)** _____ **Line of quarter section**

_____ **ft. from (E/W)** _____ **Line of quarter section.**

Well Class	Timing of Action (pick one)	Type of Action (pick one)
☐ Class I ☐ Class II ☑ Class III ☐ Class V	☑ Notice Prior to Work Date Expected to Commence March 2021 ☐ Report After Work Date Work Ended	☐ Well Rework ☑ Plugging and Abandonment ☐ Conversion to a Non-Injection Well

Provide a narrative description of the work planned to be performed, or that was performed. Use additional pages as necessary. See instructions.

A workover rig capable of performing the required abandonment operations at the required depths will be moved in and set up over the core hole. The core hole will be inspected to determine the depth to which the hole remains open and if any obstructions are present in the core hole; the presence and condition of any existing collar will also be documented. If necessary, the core hole will be cleaned out to a depth of at least 100 feet below the bedrock-LBFU contact to enable placement of cement seals.

If collar is present, an attempt will be made to remove it. If removal of the collar is not feasible, it will be left in the hole and perforated as needed to allow an annular seal to be placed to a depth of at least 25 feet bgs. In areas of agricultural use, the surface casing will be cut at least 5 feet bgs and removed.

If the collar cannot be removed, it will be perforated from at least 20 feet below the bedrock-LBFU contact to at least 20 feet above the contact; from at least 20 feet below the base of the MFGU to at least 20 feet above the top of the MFGU; and from at least 25 feet bgs to 5 feet bgs.

A tremie pipe will be used to place Type V cement in the open core hole from the bottom of the core hole to the top of the core hole. Cement retainers, as described above, will be used to force cement grout into the annulus and behind perforated intervals, as necessary.

If the hole has been obstructed, as much cement as possible will be placed from 100 feet below the LBFU-bedrock contact to the top of the core hole.

The volume of Type V cement will be recorded and will not be less than the estimated volume of material required to fill each interval. All cement grout will consist of Type V cement, or equivalent approved in accordance with the UIC Permit.

Certification

I certify under the penalty of law that I have personally examined and am familiar with the information submitted in this document and all attachments and that, based on my inquiry of those individuals immediately responsible for obtaining the information, I believe that the information is true, accurate, and complete. I am aware that there are significant penalties for submitting false information, including the possibliity of fine and imprisonment. (Ref. 40 CFR § 144.32)

Name and Official Title *(Please type or print)*	Signature	Date Signed
Dan Johnson, VP - General Manager		10/3/2019

INSTRUCTIONS FOR FORM 7520-19

This form replaces forms 7520-12 and 7520-14. Use this form only when work is planned or has occurred that affects the well's construction or operation as an injection well, including work on the casing, tubing or packer (or for shallow Class V wells, the subsurface fluid emplacement network). Use one form per injection well. While reports or other information developed by contractors or service companies may be attached, this form must be signed by a responsible entity as described at 40 CFR 144.32. Note: operators closing Class V wells should use Form 7520-17.

NAME, ADDRESS, PHONE AND/OR EMAIL OF PERMITTEE: Enter the name and street address, city/town, state, and ZIP code of the permittee. Also provide an email address (if available) and/or a phone number.

PERMIT OR EPA ID NUMBER: Enter the well identification number or permit number assigned to the well by the EPA or the permitting authority.

API NUMBER: Enter the number assigned by the local jurisdiction (usually a State Oil and Gas Agency) using the American Petroleum Institute standard numbering system.

FULL WELL NAME: Enter the full name of the well or project.

Enter the **STATE** and **COUNTY** where the well is located. For States that do not have counties, use the name of that State's equivalent jurisdiction at a more local level.

WELL LOCATION: Fill in the complete township, range, and section to the nearest quarter-quarter section. A township is north or south of the baseline, and a range is east or west of the principal meridian (e.g., T12N, R34W). Also include the distance, in feet, from the nearest north or south line and nearest east or west line of the quarter-section. Also, enter the **latitude** and **longitude** of the well in decimal degrees, to five or six places if possible; be sure to include a negative sign for the longitude of a well in the Western Hemisphere and a negative sign for the latitude of a well in the Southern Hemisphere.

Enter the **WELL CLASS,** i.e., the class of injection well as defined in 40 CFR 144.6.

TIMING OF THE ACTION: Check ***Notice prior to work*** if the activity has not yet occurred (i.e., is planned). Check ***Report after work*** if the activity described has already occurred. As appropriate, include the date the activity is expected to start or the date the activity was completed. (Note this may not be available, e.g., for a plugging plan submitted with a permit application.)

TYPE OF ACTION: Check the appropriate box to describe the kind of activity being reported. Check ***Well Rework*** for work that was/will be performed on the well after it has already been in operation as an injection well. Check ***Plugging and Abandonment*** to report on plans for or descriptions of final closure/plugging after use as an injection well. Check ***Conversion to a Non-Injection Well*** if the well is to be converted to something other than an injection well.

Provide a **NARRATIVE DESCRIPTION** of the work planned to be performed, or that was performed. The narrative should include a description of the main procedures planned or that occurred during the work activity. A service company report, daily report, or similar document may be attached if it includes all the requested information and is clear and legible.

For well reworks, include the following information: The reason for the well rework; depths of activity; type of activity; changes to injection well configuration, well casing, or cement behind casing; any plug added to the well and its depth; any newly drilled interval and its depth; method(s) to demonstrate that the well has mechanical integrity (as applicable); and any deviations from the approved rework plan (as applicable).

For a well plugging plan, include the following information: Reason for the well plugging; number of plugs placed, and their depths; materials used as plugs (e.g., cast iron bridge plug, cement, cement retainer); method to set plugs; and wait-on-cement times, if any. Also provide one or more cost estimates from an independent firm in the business of plugging and abandoning wells to plug the well as described in the plan.

For well plugging affidavit, include the following information: Reason for the well plugging; number of plugs placed, and their depths; materials used as plugs (e.g., cast iron bridge plug, cement, cement retainer); method to set plugs; wait-on-cement times, if any; and any deviations from the approved plugging plan (if applicable).

For conversion to a non-injection well, include the following information: Depths of activity; type of activity; changes to injection well configuration, well casing, or cement behind casing; any plug added to the well and its depth; any newly drilled interval and its depth; depths of new perforations; and method(s) to demonstrate that the well has mechanical integrity (as applicable).

For all of the above activities, include a well sketch depicting the work, results of well tests/logging performed, service company tickets, and any other available information demonstrating how the work was/is to be performed. Also, specify whether depths are below ground surface, relative to Kelly bushing, etc.

CERTIFICATION: This form must be signed and dated by either: a responsible corporate officer for a corporation, by a general partner for a partnership, by the proprietor of a sole proprietorship, or by a principal executive or ranking elected official for a public agency.

PAPERWORK REDUCTION ACT NOTICE: The public reporting and recordkeeping burden for this collection of information is estimated to average between 6.0 and 7.9 hours per response, depending on the injection well class. Burden means the total time, effort, or financial resource expended by persons to generate, maintain, retain, or disclose or provide information to or for a Federal Agency. This includes the time needed to review instructions; develop, acquire, install, and utilize technology and systems for the purposes of collecting, validating, and verifying information, processing and maintaining information, and disclosing and providing information; adjust the existing ways to comply with any previously applicable instructions and requirements; train personnel to be able to respond to the collection of information; search data sources; complete and review the collection of information; and, transmit or otherwise disclose the information. An agency may not conduct or sponsor, and a person is not required to respond to, a collection of information unless it displays a currently valid OMB control number. Send comments on the Agency's need for this information, the accuracy of the provided burden estimates, and any suggested methods for minimizing respondent burden, including the use of automated collection techniques to Director, Collection Strategies Division, U.S. Environmental Protection Agency (2822), 1200 Pennsylvania Ave., NW., Washington, D.C. 20460. Include the OMB control number in any correspondence. Do not send the completed forms to this address.

AS-BUILT COREHOLE 343S

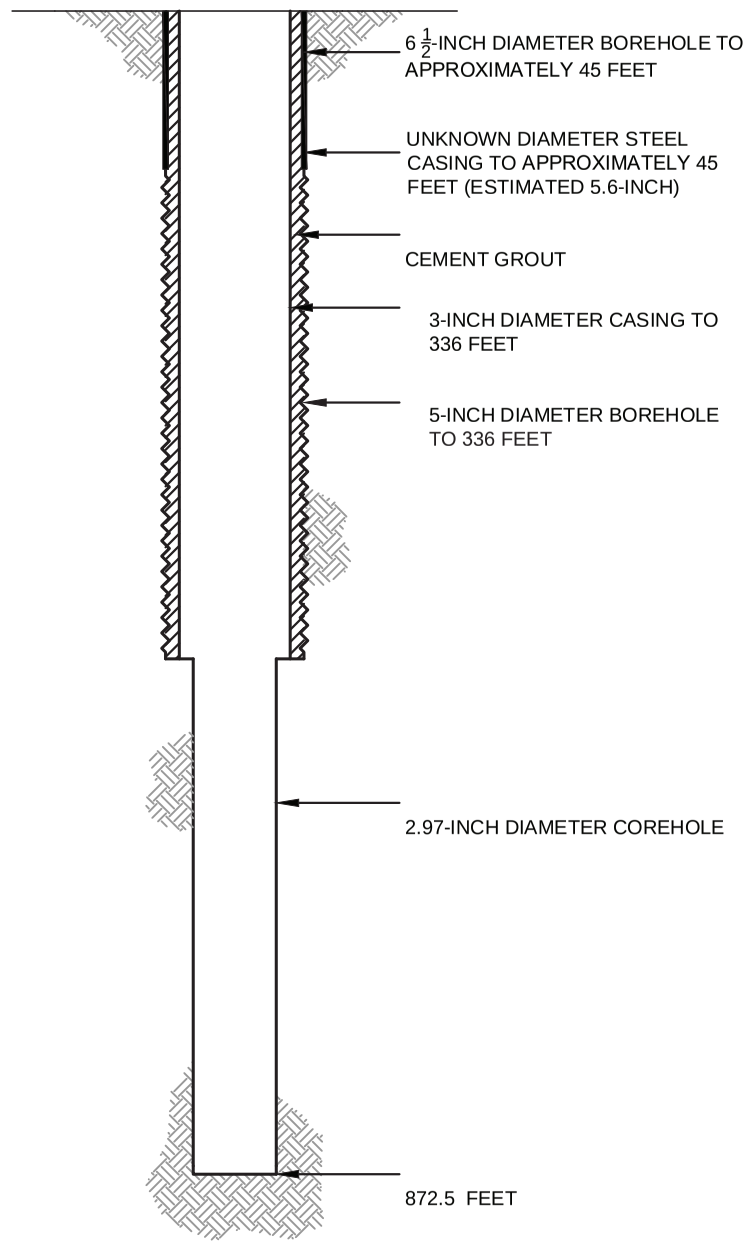

PROPOSED PLUGGING AND ABANDONMENT COREHOLE 343S

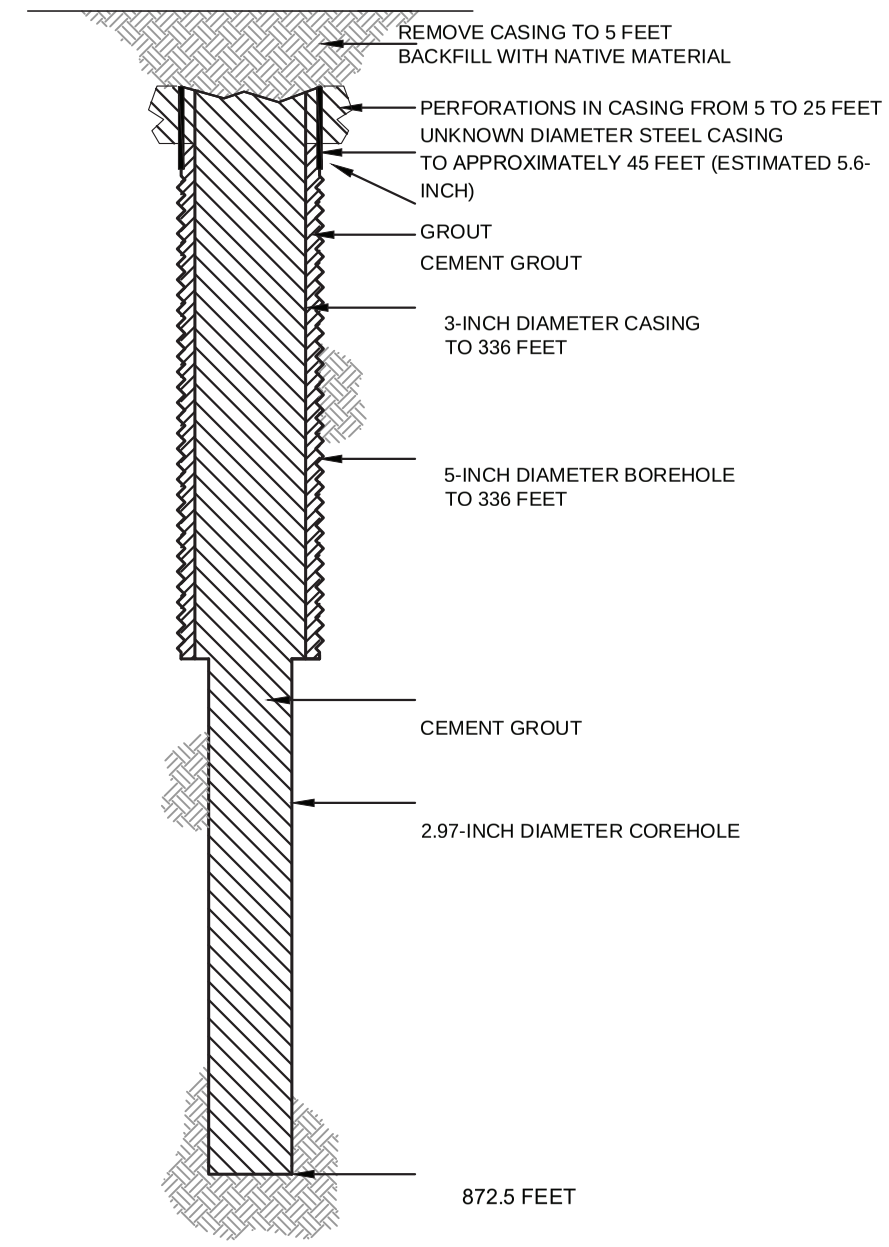

HALEY ALDRICH

FLORENCE COPPER, INC.
FLORENCE, ARIZONA

COREHOLE 343S DIAGRAM

FLORENCE COPPER INC.

NOT TO SCALE
SEPTEMBER 2019

FIGURE 1

MOBINI, GITA Printed: 4/21/2017 12:00 PM Layout: ABANDON (2)
G:\PROJECTS\CURIS RESOURCES\38706-CURIS FEASIBILITY\DRAWINGS\EPA\WELL ABANDON\415S_ABANDON.DWG

OMB No. 2040-0042 Approval Expires 4/30/2022

United States Environmental Protection Agency

WELL REWORK RECORD, PLUGGING AND ABANDONMENT PLAN, OR PLUGGING AND ABANDONMENT AFFIDAVIT

Name and Address, Phone Number and/or Email of Permittee

Florence Copper Project
1575 W Hunt Hwy,
Florence, AZ 85132

Permit or EPA ID Number	API Number	Full Well Name
R9UIC-AZ3-FY11-1		344S

State	County
Arizona	Pinal

Locate well in two directions from nearest lines of quarter section and drilling unit

Latitude 33.05211183

Surface Location

NE **1/4 of** SE **1/4 of Section** 28 **Township** 4S **Range** 9E

Longitude -111.4248404

_____ **ft. from (N/S)** _____ **Line of quarter section**

_____ **ft. from (E/W)** _____ **Line of quarter section.**

Well Class	Timing of Action (pick one)	Type of Action (pick one)
☐ Class I ☐ Class II ☑ Class III ☐ Class V	☑ Notice Prior to Work Date Expected to Commence March 2021 ☐ Report After Work Date Work Ended	☐ Well Rework ☑ Plugging and Abandonment ☐ Conversion to a Non-Injection Well

Provide a narrative description of the work planned to be performed, or that was performed. Use additional pages as necessary. See instructions.

A workover rig capable of performing the required abandonment operations at the required depths will be moved in and set up over the core hole. The core hole will be inspected to determine the depth to which the hole remains open and if any obstructions are present in the core hole; the presence and condition of any existing collar will also be documented. If necessary, the core hole will be cleaned out to a depth of at least 100 feet below the bedrock-LBFU contact to enable placement of cement seals.

If collar is present, an attempt will be made to remove it. If removal of the collar is not feasible, it will be left in the hole and perforated as needed to allow an annular seal to be placed to a depth of at least 25 feet bgs. In areas of agricultural use, the surface casing will be cut at least 5 feet bgs and removed.

If the collar cannot be removed, it will be perforated from at least 20 feet below the bedrock-LBFU contact to at least 20 feet above the contact; from at least 20 feet below the base of the MFGU to at least 20 feet above the top of the MFGU; and from at least 25 feet bgs to 5 feet bgs.

A tremie pipe will be used to place Type V cement in the open core hole from the bottom of the core hole to the top of the core hole. Cement retainers, as described above, will be used to force cement grout into the annulus and behind perforated intervals, as necessary.

If the hole has been obstructed, as much cement as possible will be placed from 100 feet below the LBFU-bedrock contact to the top of the core hole.

The volume of Type V cement will be recorded and will not be less than the estimated volume of material required to fill each interval. All cement grout will consist of Type V cement, or equivalent approved in accordance with the UIC Permit.

Certification

I certify under the penalty of law that I have personally examined and am familiar with the information submitted in this document and all attachments and that, based on my inquiry of those individuals immediately responsible for obtaining the information, I believe that the information is true, accurate, and complete. I am aware that there are significant penalties for submitting false information, including the possibliity of fine and imprisonment. (Ref. 40 CFR § 144.32)

Name and Official Title *(Please type or print)*	Signature	Date Signed
Dan Johnson, VP - General Manager		10/3/2019

INSTRUCTIONS FOR FORM 7520-19

This form replaces forms 7520-12 and 7520-14. Use this form only when work is planned or has occurred that affects the well's construction or operation as an injection well, including work on the casing, tubing or packer (or for shallow Class V wells, the subsurface fluid emplacement network). Use one form per injection well. While reports or other information developed by contractors or service companies may be attached, this form must be signed by a responsible entity as described at 40 CFR 144.32. Note: operators closing Class V wells should use Form 7520-17.

NAME, ADDRESS, PHONE AND/OR EMAIL OF PERMITTEE: Enter the name and street address, city/town, state, and ZIP code of the permittee. Also provide an email address (if available) and/or a phone number.

PERMIT OR EPA ID NUMBER: Enter the well identification number or permit number assigned to the well by the EPA or the permitting authority.

API NUMBER: Enter the number assigned by the local jurisdiction (usually a State Oil and Gas Agency) using the American Petroleum Institute standard numbering system.

FULL WELL NAME: Enter the full name of the well or project.

Enter the **STATE** and **COUNTY** where the well is located. For States that do not have counties, use the name of that State's equivalent jurisdiction at a more local level.

WELL LOCATION: Fill in the complete township, range, and section to the nearest quarter-quarter section. A township is north or south of the baseline, and a range is east or west of the principal meridian (e.g., T12N, R34W). Also include the distance, in feet, from the nearest north or south line and nearest east or west line of the quarter-section. Also, enter the **latitude** and **longitude** of the well in decimal degrees, to five or six places if possible; be sure to include a negative sign for the longitude of a well in the Western Hemisphere and a negative sign for the latitude of a well in the Southern Hemisphere.

Enter the **WELL CLASS,** i.e., the class of injection well as defined in 40 CFR 144.6.

TIMING OF THE ACTION: Check ***Notice prior to work*** if the activity has not yet occurred (i.e., is planned). Check ***Report after work*** if the activity described has already occurred. As appropriate, include the date the activity is expected to start or the date the activity was completed. (Note this may not be available, e.g., for a plugging plan submitted with a permit application.)

TYPE OF ACTION: Check the appropriate box to describe the kind of activity being reported. Check ***Well Rework*** for work that was/will be performed on the well after it has already been in operation as an injection well. Check ***Plugging and Abandonment*** to report on plans for or descriptions of final closure/plugging after use as an injection well. Check ***Conversion to a Non-Injection Well*** if the well is to be converted to something other than an injection well.

Provide a **NARRATIVE DESCRIPTION** of the work planned to be performed, or that was performed. The narrative should include a description of the main procedures planned or that occurred during the work activity. A service company report, daily report, or similar document may be attached if it includes all the requested information and is clear and legible.

For well reworks, include the following information: The reason for the well rework; depths of activity; type of activity; changes to injection well configuration, well casing, or cement behind casing; any plug added to the well and its depth; any newly drilled interval and its depth; method(s) to demonstrate that the well has mechanical integrity (as applicable); and any deviations from the approved rework plan (as applicable).

For a well plugging plan, include the following information: Reason for the well plugging; number of plugs placed, and their depths; materials used as plugs (e.g., cast iron bridge plug, cement, cement retainer); method to set plugs; and wait-on-cement times, if any. Also provide one or more cost estimates from an independent firm in the business of plugging and abandoning wells to plug the well as described in the plan.

For well plugging affidavit, include the following information: Reason for the well plugging; number of plugs placed, and their depths; materials used as plugs (e.g., cast iron bridge plug, cement, cement retainer); method to set plugs; wait-on-cement times, if any; and any deviations from the approved plugging plan (if applicable).

For conversion to a non-injection well, include the following information: Depths of activity; type of activity; changes to injection well configuration, well casing, or cement behind casing; any plug added to the well and its depth; any newly drilled interval and its depth; depths of new perforations; and method(s) to demonstrate that the well has mechanical integrity (as applicable).

For all of the above activities, include a well sketch depicting the work, results of well tests/logging performed, service company tickets, and any other available information demonstrating how the work was/is to be performed. Also, specify whether depths are below ground surface, relative to Kelly bushing, etc.

CERTIFICATION: This form must be signed and dated by either: a responsible corporate officer for a corporation, by a general partner for a partnership, by the proprietor of a sole proprietorship, or by a principal executive or ranking elected official for a public agency.

PAPERWORK REDUCTION ACT NOTICE: The public reporting and recordkeeping burden for this collection of information is estimated to average between 6.0 and 7.9 hours per response, depending on the injection well class. Burden means the total time, effort, or financial resource expended by persons to generate, maintain, retain, or disclose or provide information to or for a Federal Agency. This includes the time needed to review instructions; develop, acquire, install, and utilize technology and systems for the purposes of collecting, validating, and verifying information, processing and maintaining information, and disclosing and providing information; adjust the existing ways to comply with any previously applicable instructions and requirements; train personnel to be able to respond to the collection of information; search data sources; complete and review the collection of information; and, transmit or otherwise disclose the information. An agency may not conduct or sponsor, and a person is not required to respond to, a collection of information unless it displays a currently valid OMB control number. Send comments on the Agency's need for this information, the accuracy of the provided burden estimates, and any suggested methods for minimizing respondent burden, including the use of automated collection techniques to Director, Collection Strategies Division, U.S. Environmental Protection Agency (2822), 1200 Pennsylvania Ave., NW., Washington, D.C. 20460. Include the OMB control number in any correspondence. Do not send the completed forms to this address.

AS-BUILT COREHOLE 344S

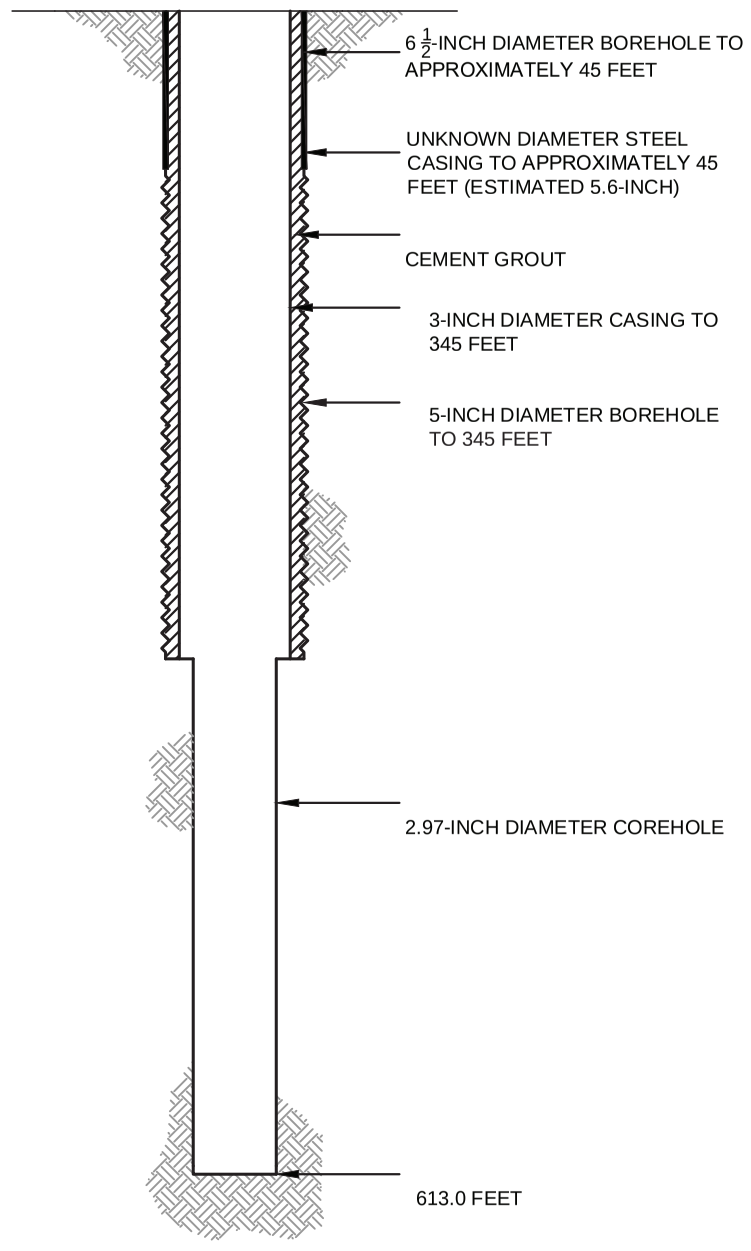

PROPOSED PLUGGING AND ABANDONMENT COREHOLE 344S

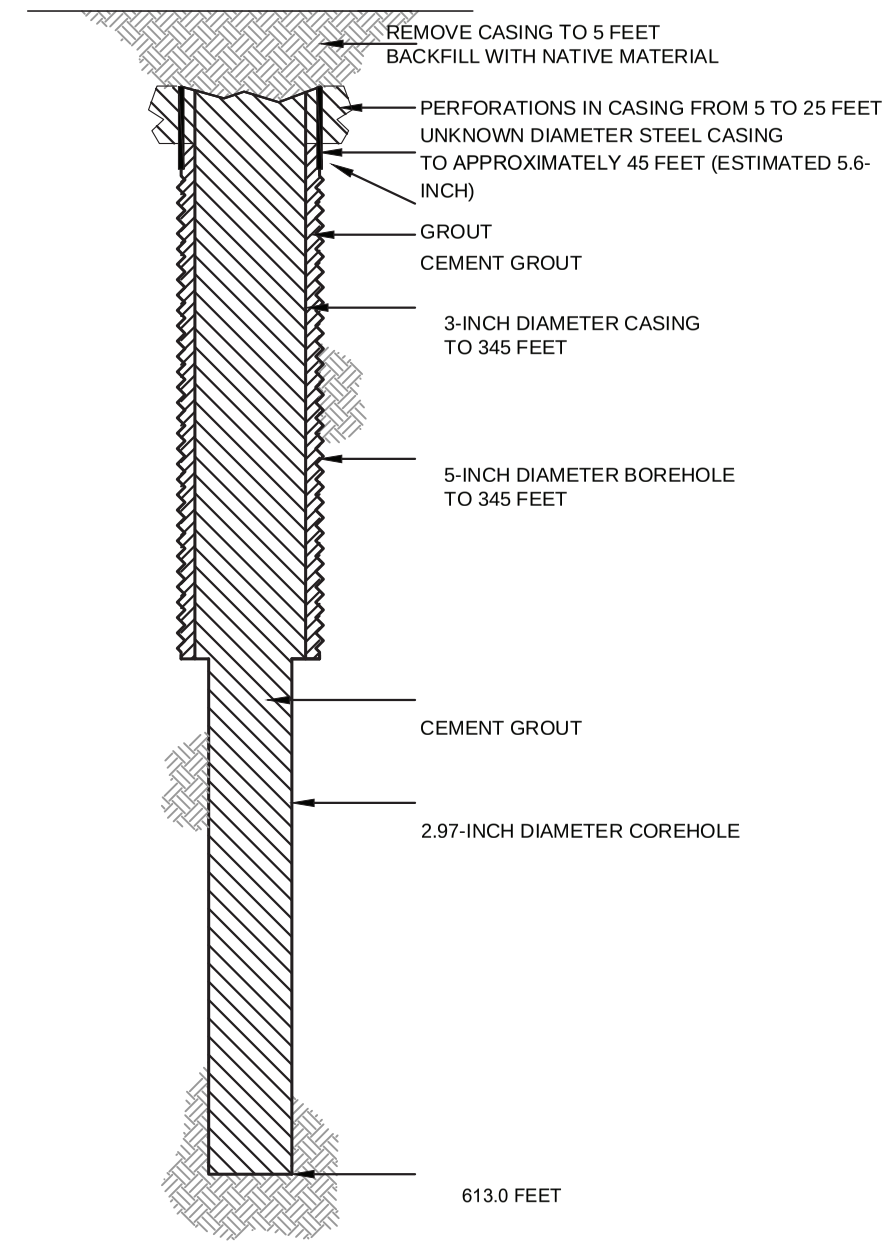

HALEY ALDRICH

FLORENCE COPPER, INC.
FLORENCE, ARIZONA

COREHOLE 344S DIAGRAM

FLORENCE COPPER INC.

NOT TO SCALE
SEPTEMBER 2019

FIGURE 1

MOBINI, GITA Printed: 4/21/2017 12:00 PM Layout: ABANDON (2)
G:\PROJECTS\CURIS RESOURCES\38706-CURIS FEASIBILITY\DRAWINGS\EPA\WELL ABANDON\415S_ABANDON.DWG

OMB No. 2040-0042 Approval Expires 4/30/2022

United States Environmental Protection Agency

WELL REWORK RECORD, PLUGGING AND ABANDONMENT PLAN, OR PLUGGING AND ABANDONMENT AFFIDAVIT

Name and Address, Phone Number and/or Email of Permittee

Florence Copper Project
1575 W Hunt Hwy,
Florence, AZ 85132

Permit or EPA ID Number	API Number	Full Well Name
R9UIC-AZ3-FY11-1		345S

State	County
Arizona	Pinal

Locate well in two directions from nearest lines of quarter section and drilling unit

Latitude 33.05271812

Longitude -111.4276927

Surface Location

NW **1/4 of** SE **1/4 of Section** 28 **Township** 4S **Range** 9E

_____ **ft. from (N/S)** _____ **Line of quarter section**

_____ **ft. from (E/W)** _____ **Line of quarter section.**

Well Class	Timing of Action (pick one)	Type of Action (pick one)
☐ Class I ☐ Class II ☑ Class III ☐ Class V	☑ Notice Prior to Work Date Expected to Commence March 2021 ☐ Report After Work Date Work Ended	☐ Well Rework ☑ Plugging and Abandonment ☐ Conversion to a Non-Injection Well

Provide a narrative description of the work planned to be performed, or that was performed. Use additional pages as necessary. See instructions.

A workover rig capable of performing the required abandonment operations at the required depths will be moved in and set up over the core hole. The core hole will be inspected to determine the depth to which the hole remains open and if any obstructions are present in the core hole; the presence and condition of any existing collar will also be documented. If necessary, the core hole will be cleaned out to a depth of at least 100 feet below the bedrock-LBFU contact to enable placement of cement seals.

If collar is present, an attempt will be made to remove it. If removal of the collar is not feasible, it will be left in the hole and perforated as needed to allow an annular seal to be placed to a depth of at least 25 feet bgs. In areas of agricultural use, the surface casing will be cut at least 5 feet bgs and removed.

If the collar cannot be removed, it will be perforated from at least 20 feet below the bedrock-LBFU contact to at least 20 feet above the contact; from at least 20 feet below the base of the MFGU to at least 20 feet above the top of the MFGU; and from at least 25 feet bgs to 5 feet bgs.

A tremie pipe will be used to place Type V cement in the open core hole from the bottom of the core hole to the top of the core hole. Cement retainers, as described above, will be used to force cement grout into the annulus and behind perforated intervals, as necessary.

If the hole has been obstructed, as much cement as possible will be placed from 100 feet below the LBFU-bedrock contact to the top of the core hole.

The volume of Type V cement will be recorded and will not be less than the estimated volume of material required to fill each interval. All cement grout will consist of Type V cement, or equivalent approved in accordance with the UIC Permit.

Certification

I certify under the penalty of law that I have personally examined and am familiar with the information submitted in this document and all attachments and that, based on my inquiry of those individuals immediately responsible for obtaining the information, I believe that the information is true, accurate, and complete. I am aware that there are significant penalties for submitting false information, including the possibliity of fine and imprisonment. (Ref. 40 CFR § 144.32)

Name and Official Title *(Please type or print)*	Signature	Date Signed
Dan Johnson, VP - General Manager		10/3/2019

INSTRUCTIONS FOR FORM 7520-19

This form replaces forms 7520-12 and 7520-14. Use this form only when work is planned or has occurred that affects the well's construction or operation as an injection well, including work on the casing, tubing or packer (or for shallow Class V wells, the subsurface fluid emplacement network). Use one form per injection well. While reports or other information developed by contractors or service companies may be attached, this form must be signed by a responsible entity as described at 40 CFR 144.32. Note: operators closing Class V wells should use Form 7520-17.

NAME, ADDRESS, PHONE AND/OR EMAIL OF PERMITTEE: Enter the name and street address, city/town, state, and ZIP code of the permittee. Also provide an email address (if available) and/or a phone number.

PERMIT OR EPA ID NUMBER: Enter the well identification number or permit number assigned to the well by the EPA or the permitting authority.

API NUMBER: Enter the number assigned by the local jurisdiction (usually a State Oil and Gas Agency) using the American Petroleum Institute standard numbering system.

FULL WELL NAME: Enter the full name of the well or project.

Enter the **STATE** and **COUNTY** where the well is located. For States that do not have counties, use the name of that State's equivalent jurisdiction at a more local level.

WELL LOCATION: Fill in the complete township, range, and section to the nearest quarter-quarter section. A township is north or south of the baseline, and a range is east or west of the principal meridian (e.g., T12N, R34W). Also include the distance, in feet, from the nearest north or south line and nearest east or west line of the quarter-section. Also, enter the **latitude** and **longitude** of the well in decimal degrees, to five or six places if possible; be sure to include a negative sign for the longitude of a well in the Western Hemisphere and a negative sign for the latitude of a well in the Southern Hemisphere.

Enter the **WELL CLASS,** i.e., the class of injection well as defined in 40 CFR 144.6.

TIMING OF THE ACTION: Check ***Notice prior to work*** if the activity has not yet occurred (i.e., is planned). Check ***Report after work*** if the activity described has already occurred. As appropriate, include the date the activity is expected to start or the date the activity was completed. (Note this may not be available, e.g., for a plugging plan submitted with a permit application.)

TYPE OF ACTION: Check the appropriate box to describe the kind of activity being reported. Check ***Well Rework*** for work that was/will be performed on the well after it has already been in operation as an injection well. Check ***Plugging and Abandonment*** to report on plans for or descriptions of final closure/plugging after use as an injection well. Check ***Conversion to a Non-Injection Well*** if the well is to be converted to something other than an injection well.

Provide a **NARRATIVE DESCRIPTION** of the work planned to be performed, or that was performed. The narrative should include a description of the main procedures planned or that occurred during the work activity. A service company report, daily report, or similar document may be attached if it includes all the requested information and is clear and legible.

For well reworks, include the following information: The reason for the well rework; depths of activity; type of activity; changes to injection well configuration, well casing, or cement behind casing; any plug added to the well and its depth; any newly drilled interval and its depth; method(s) to demonstrate that the well has mechanical integrity (as applicable); and any deviations from the approved rework plan (as applicable).

For a well plugging plan, include the following information: Reason for the well plugging; number of plugs placed, and their depths; materials used as plugs (e.g., cast iron bridge plug, cement, cement retainer); method to set plugs; and wait-on-cement times, if any. Also provide one or more cost estimates from an independent firm in the business of plugging and abandoning wells to plug the well as described in the plan.

For well plugging affidavit, include the following information: Reason for the well plugging; number of plugs placed, and their depths; materials used as plugs (e.g., cast iron bridge plug, cement, cement retainer); method to set plugs; wait-on-cement times, if any; and any deviations from the approved plugging plan (if applicable).

For conversion to a non-injection well, include the following information: Depths of activity; type of activity; changes to injection well configuration, well casing, or cement behind casing; any plug added to the well and its depth; any newly drilled interval and its depth; depths of new perforations; and method(s) to demonstrate that the well has mechanical integrity (as applicable).

For all of the above activities, include a well sketch depicting the work, results of well tests/logging performed, service company tickets, and any other available information demonstrating how the work was/is to be performed. Also, specify whether depths are below ground surface, relative to Kelly bushing, etc.

CERTIFICATION: This form must be signed and dated by either: a responsible corporate officer for a corporation, by a general partner for a partnership, by the proprietor of a sole proprietorship, or by a principal executive or ranking elected official for a public agency.

PAPERWORK REDUCTION ACT NOTICE: The public reporting and recordkeeping burden for this collection of information is estimated to average between 6.0 and 7.9 hours per response, depending on the injection well class. Burden means the total time, effort, or financial resource expended by persons to generate, maintain, retain, or disclose or provide information to or for a Federal Agency. This includes the time needed to review instructions; develop, acquire, install, and utilize technology and systems for the purposes of collecting, validating, and verifying information, processing and maintaining information, and disclosing and providing information; adjust the existing ways to comply with any previously applicable instructions and requirements; train personnel to be able to respond to the collection of information; search data sources; complete and review the collection of information; and, transmit or otherwise disclose the information. An agency may not conduct or sponsor, and a person is not required to respond to, a collection of information unless it displays a currently valid OMB control number. Send comments on the Agency's need for this information, the accuracy of the provided burden estimates, and any suggested methods for minimizing respondent burden, including the use of automated collection techniques to Director, Collection Strategies Division, U.S. Environmental Protection Agency (2822), 1200 Pennsylvania Ave., NW., Washington, D.C. 20460. Include the OMB control number in any correspondence. Do not send the completed forms to this address.

AS-BUILT COREHOLE 345S

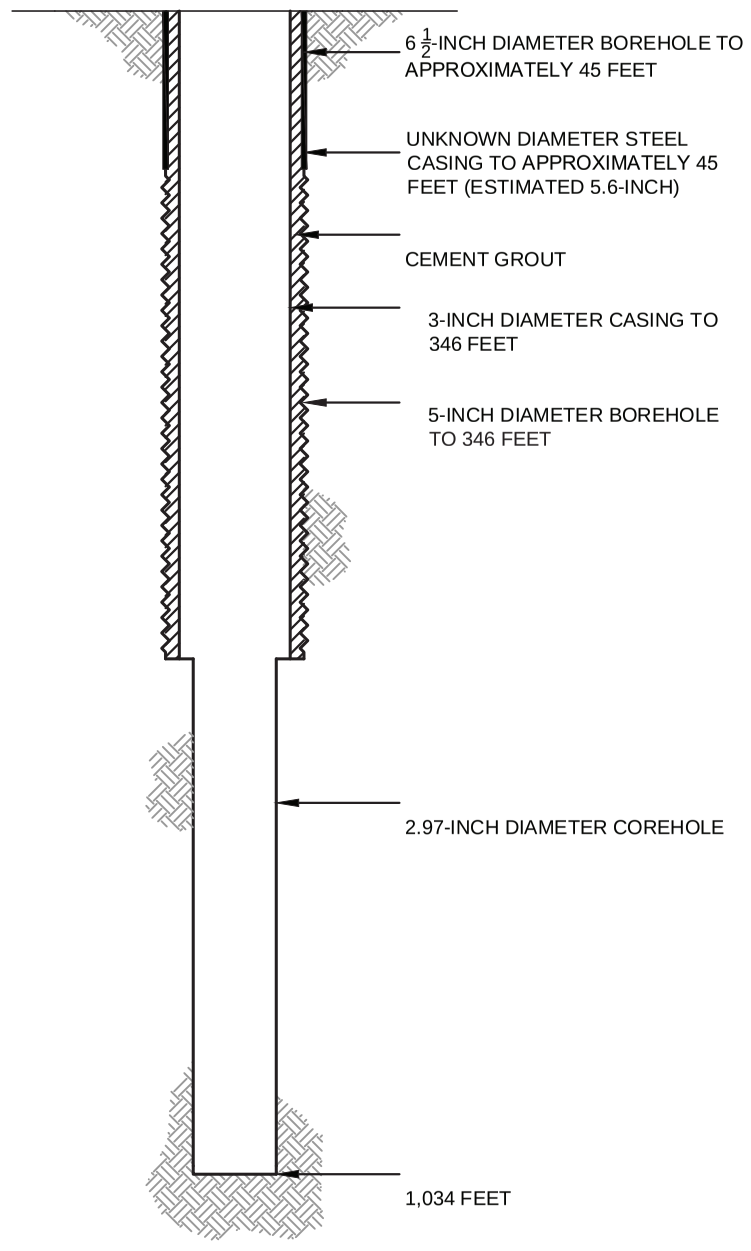

PROPOSED PLUGGING AND ABANDONMENT COREHOLE 345S

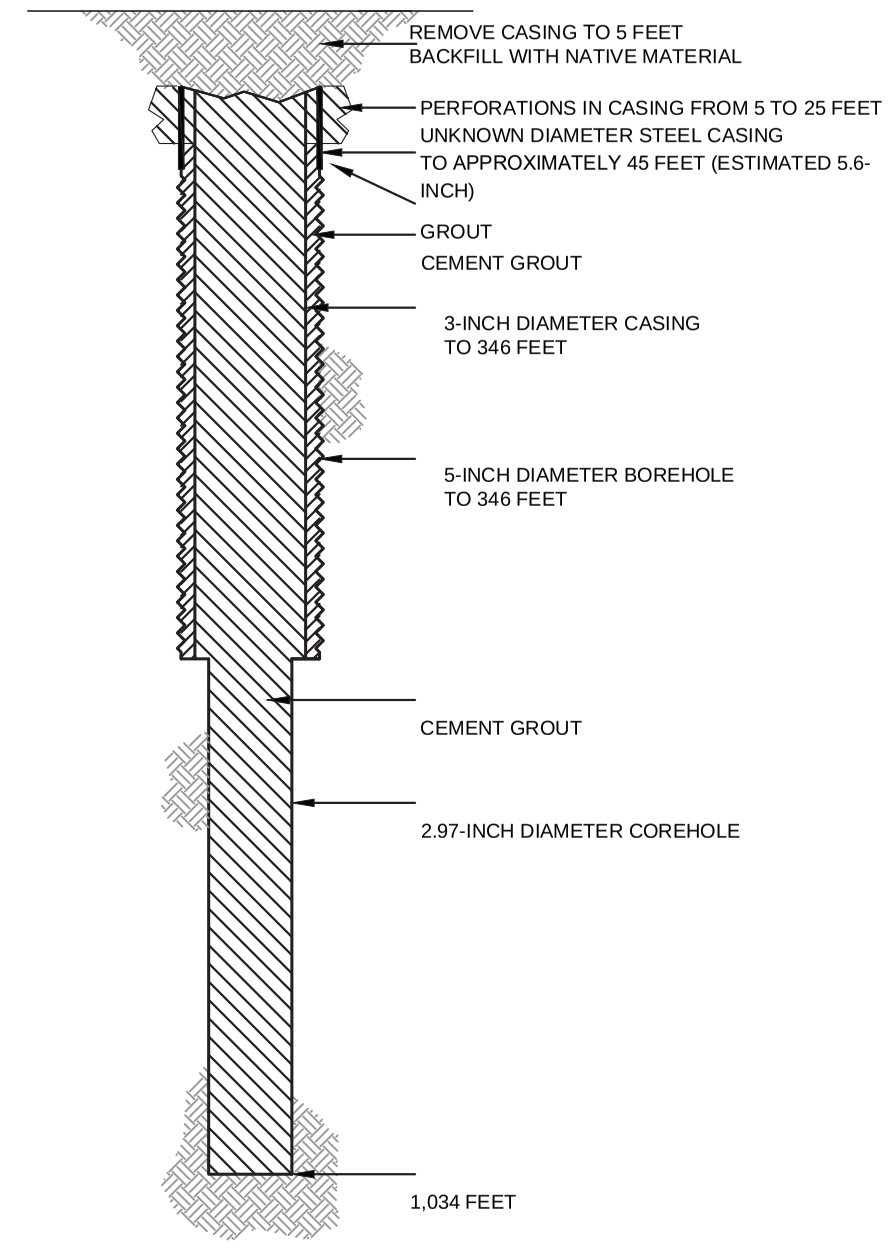

HALEY ALDRICH

FLORENCE COPPER, INC.
FLORENCE, ARIZONA

COREHOLE 345S DIAGRAM

FLORENCE COPPER INC.

NOT TO SCALE
SEPTEMBER 2019

FIGURE 1

MOBINI, GITA Printed: 4/21/2017 12:00 PM Layout: ABANDON (2)
\PROJECTS\CURIS RESOURCES38706-CURIS FEASIBILITY\DRAWINGS\EPA\WELL ABANDON\415S_ABANDON.DWG

OMB No. 2040-0042 Approval Expires 4/30/2022

United States Environmental Protection Agency

WELL REWORK RECORD, PLUGGING AND ABANDONMENT PLAN, OR PLUGGING AND ABANDONMENT AFFIDAVIT

Name and Address, Phone Number and/or Email of Permittee

Florence Copper Project
1575 W Hunt Hwy,
Florence, AZ 85132

Permit or EPA ID Number	API Number	Full Well Name
R9UIC-AZ3-FY11-1		346S

State	County
Arizona	Pinal

Locate well in two directions from nearest lines of quarter section and drilling unit

Latitude 33.05272132

Longitude -111.4285086

Surface Location

NW **1/4 of** SE **1/4 of Section** 28 **Township** 4S **Range** 9E

_____ **ft. from (N/S)** _____ **Line of quarter section**

_____ **ft. from (E/W)** _____ **Line of quarter section.**

Well Class	Timing of Action (pick one)	Type of Action (pick one)
☐ Class I ☐ Class II ☑ Class III ☐ Class V	☑ Notice Prior to Work Date Expected to Commence March 2021 ☐ Report After Work Date Work Ended	☐ Well Rework ☑ Plugging and Abandonment ☐ Conversion to a Non-Injection Well

Provide a narrative description of the work planned to be performed, or that was performed. Use additional pages as necessary. See instructions.

A workover rig capable of performing the required abandonment operations at the required depths will be moved in and set up over the core hole. The core hole will be inspected to determine the depth to which the hole remains open and if any obstructions are present in the core hole; the presence and condition of any existing collar will also be documented. If necessary, the core hole will be cleaned out to a depth of at least 100 feet below the bedrock-LBFU contact to enable placement of cement seals.

If collar is present, an attempt will be made to remove it. If removal of the collar is not feasible, it will be left in the hole and perforated as needed to allow an annular seal to be placed to a depth of at least 25 feet bgs. In areas of agricultural use, the surface casing will be cut at least 5 feet bgs and removed.

If the collar cannot be removed, it will be perforated from at least 20 feet below the bedrock-LBFU contact to at least 20 feet above the contact; from at least 20 feet below the base of the MFGU to at least 20 feet above the top of the MFGU; and from at least 25 feet bgs to 5 feet bgs.

A tremie pipe will be used to place Type V cement in the open core hole from the bottom of the core hole to the top of the core hole. Cement retainers, as described above, will be used to force cement grout into the annulus and behind perforated intervals, as necessary.

If the hole has been obstructed, as much cement as possible will be placed from 100 feet below the LBFU-bedrock contact to the top of the core hole.

The volume of Type V cement will be recorded and will not be less than the estimated volume of material required to fill each interval. All cement grout will consist of Type V cement, or equivalent approved in accordance with the UIC Permit.

Certification

I certify under the penalty of law that I have personally examined and am familiar with the information submitted in this document and all attachments and that, based on my inquiry of those individuals immediately responsible for obtaining the information, I believe that the information is true, accurate, and complete. I am aware that there are significant penalties for submitting false information, including the possibliity of fine and imprisonment. (Ref. 40 CFR § 144.32)

Name and Official Title *(Please type or print)*	Signature	Date Signed
Dan Johnson, VP - General Manager		10/3/2019

INSTRUCTIONS FOR FORM 7520-19

This form replaces forms 7520-12 and 7520-14. Use this form only when work is planned or has occurred that affects the well's construction or operation as an injection well, including work on the casing, tubing or packer (or for shallow Class V wells, the subsurface fluid emplacement network). Use one form per injection well. While reports or other information developed by contractors or service companies may be attached, this form must be signed by a responsible entity as described at 40 CFR 144.32. Note: operators closing Class V wells should use Form 7520-17.

NAME, ADDRESS, PHONE AND/OR EMAIL OF PERMITTEE: Enter the name and street address, city/town, state, and ZIP code of the permittee. Also provide an email address (if available) and/or a phone number.

PERMIT OR EPA ID NUMBER: Enter the well identification number or permit number assigned to the well by the EPA or the permitting authority.

API NUMBER: Enter the number assigned by the local jurisdiction (usually a State Oil and Gas Agency) using the American Petroleum Institute standard numbering system.

FULL WELL NAME: Enter the full name of the well or project.

Enter the **STATE** and **COUNTY** where the well is located. For States that do not have counties, use the name of that State's equivalent jurisdiction at a more local level.

WELL LOCATION: Fill in the complete township, range, and section to the nearest quarter-quarter section. A township is north or south of the baseline, and a range is east or west of the principal meridian (e.g., T12N, R34W). Also include the distance, in feet, from the nearest north or south line and nearest east or west line of the quarter-section. Also, enter the **latitude** and **longitude** of the well in decimal degrees, to five or six places if possible; be sure to include a negative sign for the longitude of a well in the Western Hemisphere and a negative sign for the latitude of a well in the Southern Hemisphere.

Enter the **WELL CLASS,** i.e., the class of injection well as defined in 40 CFR 144.6.

TIMING OF THE ACTION: Check ***Notice prior to work*** if the activity has not yet occurred (i.e., is planned). Check ***Report after work*** if the activity described has already occurred. As appropriate, include the date the activity is expected to start or the date the activity was completed. (Note this may not be available, e.g., for a plugging plan submitted with a permit application.)

TYPE OF ACTION: Check the appropriate box to describe the kind of activity being reported. Check ***Well Rework*** for work that was/will be performed on the well after it has already been in operation as an injection well. Check ***Plugging and Abandonment*** to report on plans for or descriptions of final closure/plugging after use as an injection well. Check ***Conversion to a Non-Injection Well*** if the well is to be converted to something other than an injection well.

Provide a **NARRATIVE DESCRIPTION** of the work planned to be performed, or that was performed. The narrative should include a description of the main procedures planned or that occurred during the work activity. A service company report, daily report, or similar document may be attached if it includes all the requested information and is clear and legible.

For well reworks, include the following information: The reason for the well rework; depths of activity; type of activity; changes to injection well configuration, well casing, or cement behind casing; any plug added to the well and its depth; any newly drilled interval and its depth; method(s) to demonstrate that the well has mechanical integrity (as applicable); and any deviations from the approved rework plan (as applicable).

For a well plugging plan, include the following information: Reason for the well plugging; number of plugs placed, and their depths; materials used as plugs (e.g., cast iron bridge plug, cement, cement retainer); method to set plugs; and wait-on-cement times, if any. Also provide one or more cost estimates from an independent firm in the business of plugging and abandoning wells to plug the well as described in the plan.

For well plugging affidavit, include the following information: Reason for the well plugging; number of plugs placed, and their depths; materials used as plugs (e.g., cast iron bridge plug, cement, cement retainer); method to set plugs; wait-on-cement times, if any; and any deviations from the approved plugging plan (if applicable).

For conversion to a non-injection well, include the following information: Depths of activity; type of activity; changes to injection well configuration, well casing, or cement behind casing; any plug added to the well and its depth; any newly drilled interval and its depth; depths of new perforations; and method(s) to demonstrate that the well has mechanical integrity (as applicable).

For all of the above activities, include a well sketch depicting the work, results of well tests/logging performed, service company tickets, and any other available information demonstrating how the work was/is to be performed. Also, specify whether depths are below ground surface, relative to Kelly bushing, etc.

CERTIFICATION: This form must be signed and dated by either: a responsible corporate officer for a corporation, by a general partner for a partnership, by the proprietor of a sole proprietorship, or by a principal executive or ranking elected official for a public agency.

PAPERWORK REDUCTION ACT NOTICE: The public reporting and recordkeeping burden for this collection of information is estimated to average between 6.0 and 7.9 hours per response, depending on the injection well class. Burden means the total time, effort, or financial resource expended by persons to generate, maintain, retain, or disclose or provide information to or for a Federal Agency. This includes the time needed to review instructions; develop, acquire, install, and utilize technology and systems for the purposes of collecting, validating, and verifying information, processing and maintaining information, and disclosing and providing information; adjust the existing ways to comply with any previously applicable instructions and requirements; train personnel to be able to respond to the collection of information; search data sources; complete and review the collection of information; and, transmit or otherwise disclose the information. An agency may not conduct or sponsor, and a person is not required to respond to, a collection of information unless it displays a currently valid OMB control number. Send comments on the Agency's need for this information, the accuracy of the provided burden estimates, and any suggested methods for minimizing respondent burden, including the use of automated collection techniques to Director, Collection Strategies Division, U.S. Environmental Protection Agency (2822), 1200 Pennsylvania Ave., NW., Washington, D.C. 20460. Include the OMB control number in any correspondence. Do not send the completed forms to this address.

AS-BUILT COREHOLE 346S

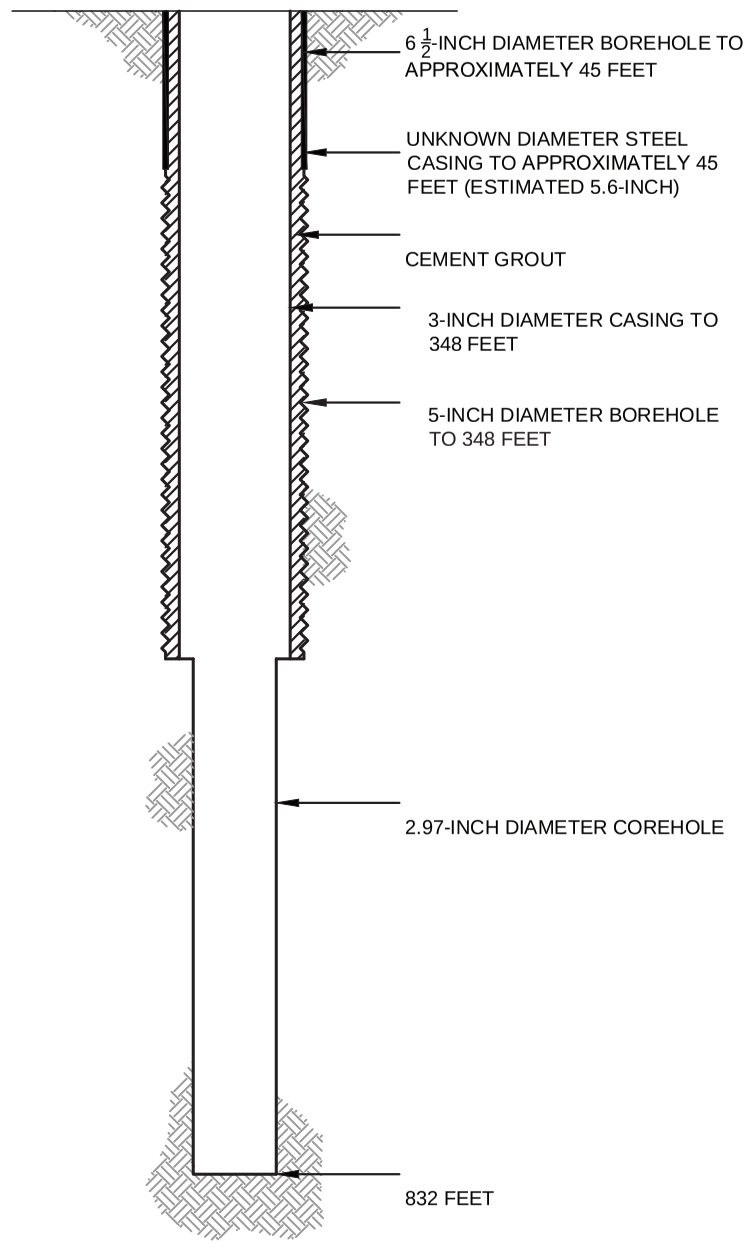

PROPOSED PLUGGING AND ABANDONMENT COREHOLE 346S

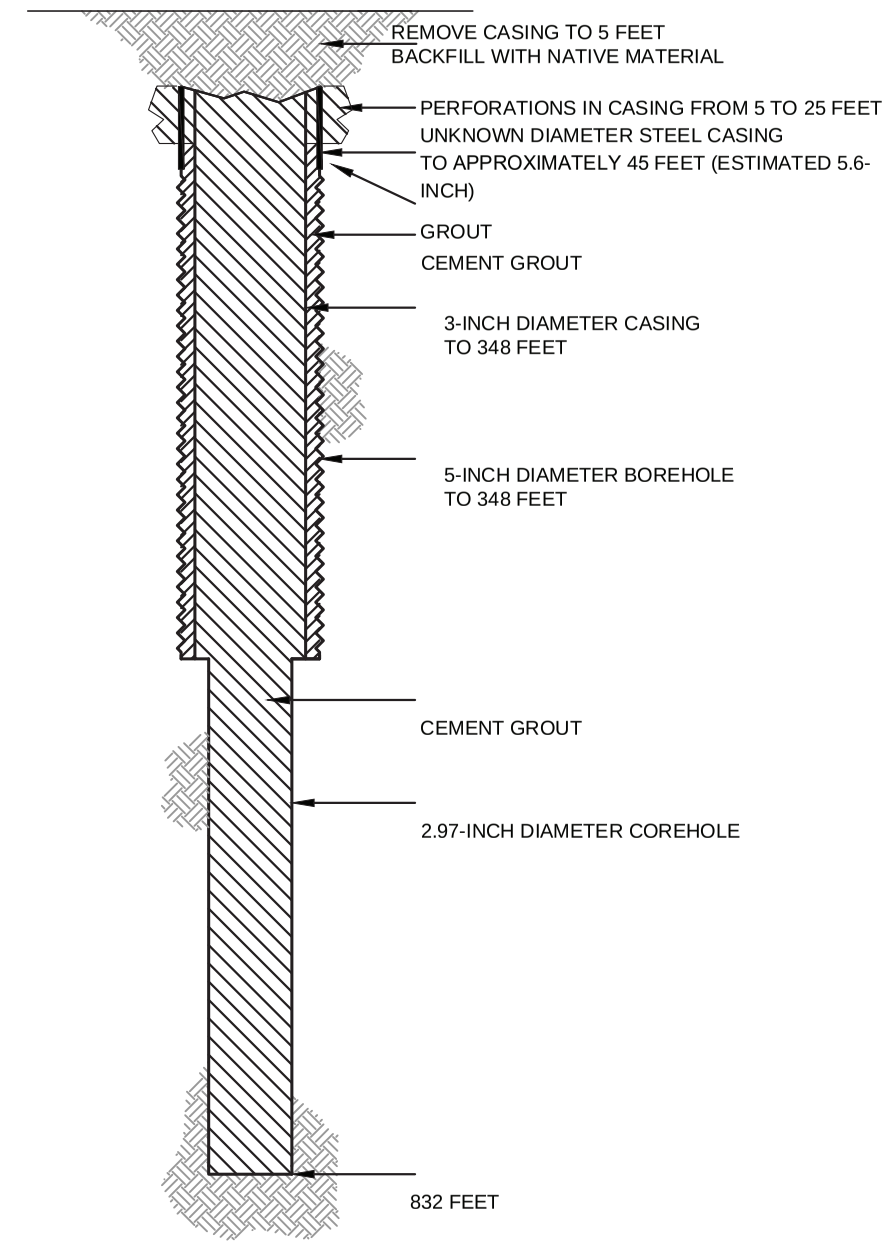

HALEY ALDRICH

FLORENCE COPPER, INC.
FLORENCE, ARIZONA

COREHOLE 346S DIAGRAM

FLORENCE COPPER INC.

NOT TO SCALE
SEPTEMBER 2019

FIGURE 1

MOBINI, GITA Printed: 4/21/2017 12:00 PM Layout: ABANDON (2)
\PROJECTS\CURIS RESOURCES38706-CURIS FEASIBILITY\DRAWINGS\EPA\WELL ABANDON\415S_ABANDON.DWG

OMB No. 2040-0042 Approval Expires 4/30/2022

United States Environmental Protection Agency

WELL REWORK RECORD, PLUGGING AND ABANDONMENT PLAN, OR PLUGGING AND ABANDONMENT AFFIDAVIT

Name and Address, Phone Number and/or Email of Permittee

Florence Copper Project
1575 W Hunt Hwy,
Florence, AZ 85132

Permit or EPA ID Number	API Number	Full Well Name
R9UIC-AZ3-FY11-1		347S

State	County
Arizona	Pinal

Locate well in two directions from nearest lines of quarter section and drilling unit

Latitude 33.05272451

Longitude -111.4293245

Surface Location

NW **1/4 of** SE **1/4 of Section** 28 **Township** 4S **Range** 9E

_____ **ft. from (N/S)** _____ **Line of quarter section**

_____ **ft. from (E/W)** _____ **Line of quarter section.**

Well Class	Timing of Action (pick one)	Type of Action (pick one)
☐ Class I ☐ Class II ☑ Class III ☐ Class V	☑ Notice Prior to Work Date Expected to Commence March 2021 ☐ Report After Work Date Work Ended	☐ Well Rework ☑ Plugging and Abandonment ☐ Conversion to a Non-Injection Well

Provide a narrative description of the work planned to be performed, or that was performed. Use additional pages as necessary. See instructions.

A workover rig capable of performing the required abandonment operations at the required depths will be moved in and set up over the core hole. The core hole will be inspected to determine the depth to which the hole remains open and if any obstructions are present in the core hole; the presence and condition of any existing collar will also be documented. If necessary, the core hole will be cleaned out to a depth of at least 100 feet below the bedrock-LBFU contact to enable placement of cement seals.

If collar is present, an attempt will be made to remove it. If removal of the collar is not feasible, it will be left in the hole and perforated as needed to allow an annular seal to be placed to a depth of at least 25 feet bgs. In areas of agricultural use, the surface casing will be cut at least 5 feet bgs and removed.

If the collar cannot be removed, it will be perforated from at least 20 feet below the bedrock-LBFU contact to at least 20 feet above the contact; from at least 20 feet below the base of the MFGU to at least 20 feet above the top of the MFGU; and from at least 25 feet bgs to 5 feet bgs.

A tremie pipe will be used to place Type V cement in the open core hole from the bottom of the core hole to the top of the core hole. Cement retainers, as described above, will be used to force cement grout into the annulus and behind perforated intervals, as necessary.

If the hole has been obstructed, as much cement as possible will be placed from 100 feet below the LBFU-bedrock contact to the top of the core hole.

The volume of Type V cement will be recorded and will not be less than the estimated volume of material required to fill each interval. All cement grout will consist of Type V cement, or equivalent approved in accordance with the UIC Permit.

Certification

I certify under the penalty of law that I have personally examined and am familiar with the information submitted in this document and all attachments and that, based on my inquiry of those individuals immediately responsible for obtaining the information, I believe that the information is true, accurate, and complete. I am aware that there are significant penalties for submitting false information, including the possibliity of fine and imprisonment. (Ref. 40 CFR § 144.32)

Name and Official Title *(Please type or print)*	Signature	Date Signed
Dan Johnson, VP - General Manager		10/3/2019

INSTRUCTIONS FOR FORM 7520-19

This form replaces forms 7520-12 and 7520-14. Use this form only when work is planned or has occurred that affects the well's construction or operation as an injection well, including work on the casing, tubing or packer (or for shallow Class V wells, the subsurface fluid emplacement network). Use one form per injection well. While reports or other information developed by contractors or service companies may be attached, this form must be signed by a responsible entity as described at 40 CFR 144.32. Note: operators closing Class V wells should use Form 7520-17.

NAME, ADDRESS, PHONE AND/OR EMAIL OF PERMITTEE: Enter the name and street address, city/town, state, and ZIP code of the permittee. Also provide an email address (if available) and/or a phone number.

PERMIT OR EPA ID NUMBER: Enter the well identification number or permit number assigned to the well by the EPA or the permitting authority.

API NUMBER: Enter the number assigned by the local jurisdiction (usually a State Oil and Gas Agency) using the American Petroleum Institute standard numbering system.

FULL WELL NAME: Enter the full name of the well or project.

Enter the **STATE** and **COUNTY** where the well is located. For States that do not have counties, use the name of that State's equivalent jurisdiction at a more local level.

WELL LOCATION: Fill in the complete township, range, and section to the nearest quarter-quarter section. A township is north or south of the baseline, and a range is east or west of the principal meridian (e.g., T12N, R34W). Also include the distance, in feet, from the nearest north or south line and nearest east or west line of the quarter-section. Also, enter the **latitude** and **longitude** of the well in decimal degrees, to five or six places if possible; be sure to include a negative sign for the longitude of a well in the Western Hemisphere and a negative sign for the latitude of a well in the Southern Hemisphere.

Enter the **WELL CLASS,** i.e., the class of injection well as defined in 40 CFR 144.6.

TIMING OF THE ACTION: Check ***Notice prior to work*** if the activity has not yet occurred (i.e., is planned). Check ***Report after work*** if the activity described has already occurred. As appropriate, include the date the activity is expected to start or the date the activity was completed. (Note this may not be available, e.g., for a plugging plan submitted with a permit application.)

TYPE OF ACTION: Check the appropriate box to describe the kind of activity being reported. Check ***Well Rework*** for work that was/will be performed on the well after it has already been in operation as an injection well. Check ***Plugging and Abandonment*** to report on plans for or descriptions of final closure/plugging after use as an injection well. Check ***Conversion to a Non-Injection Well*** if the well is to be converted to something other than an injection well.

Provide a **NARRATIVE DESCRIPTION** of the work planned to be performed, or that was performed. The narrative should include a description of the main procedures planned or that occurred during the work activity. A service company report, daily report, or similar document may be attached if it includes all the requested information and is clear and legible.

For well reworks, include the following information: The reason for the well rework; depths of activity; type of activity; changes to injection well configuration, well casing, or cement behind casing; any plug added to the well and its depth; any newly drilled interval and its depth; method(s) to demonstrate that the well has mechanical integrity (as applicable); and any deviations from the approved rework plan (as applicable).

For a well plugging plan, include the following information: Reason for the well plugging; number of plugs placed, and their depths; materials used as plugs (e.g., cast iron bridge plug, cement, cement retainer); method to set plugs; and wait-on-cement times, if any. Also provide one or more cost estimates from an independent firm in the business of plugging and abandoning wells to plug the well as described in the plan.

For well plugging affidavit, include the following information: Reason for the well plugging; number of plugs placed, and their depths; materials used as plugs (e.g., cast iron bridge plug, cement, cement retainer); method to set plugs; wait-on-cement times, if any; and any deviations from the approved plugging plan (if applicable).

For conversion to a non-injection well, include the following information: Depths of activity; type of activity; changes to injection well configuration, well casing, or cement behind casing; any plug added to the well and its depth; any newly drilled interval and its depth; depths of new perforations; and method(s) to demonstrate that the well has mechanical integrity (as applicable).

For all of the above activities, include a well sketch depicting the work, results of well tests/logging performed, service company tickets, and any other available information demonstrating how the work was/is to be performed. Also, specify whether depths are below ground surface, relative to Kelly bushing, etc.

CERTIFICATION: This form must be signed and dated by either: a responsible corporate officer for a corporation, by a general partner for a partnership, by the proprietor of a sole proprietorship, or by a principal executive or ranking elected official for a public agency.

PAPERWORK REDUCTION ACT NOTICE: The public reporting and recordkeeping burden for this collection of information is estimated to average between 6.0 and 7.9 hours per response, depending on the injection well class. Burden means the total time, effort, or financial resource expended by persons to generate, maintain, retain, or disclose or provide information to or for a Federal Agency. This includes the time needed to review instructions; develop, acquire, install, and utilize technology and systems for the purposes of collecting, validating, and verifying information, processing and maintaining information, and disclosing and providing information; adjust the existing ways to comply with any previously applicable instructions and requirements; train personnel to be able to respond to the collection of information; search data sources; complete and review the collection of information; and, transmit or otherwise disclose the information. An agency may not conduct or sponsor, and a person is not required to respond to, a collection of information unless it displays a currently valid OMB control number. Send comments on the Agency's need for this information, the accuracy of the provided burden estimates, and any suggested methods for minimizing respondent burden, including the use of automated collection techniques to Director, Collection Strategies Division, U.S. Environmental Protection Agency (2822), 1200 Pennsylvania Ave., NW., Washington, D.C. 20460. Include the OMB control number in any correspondence. Do not send the completed forms to this address.

AS-BUILT COREHOLE 347S

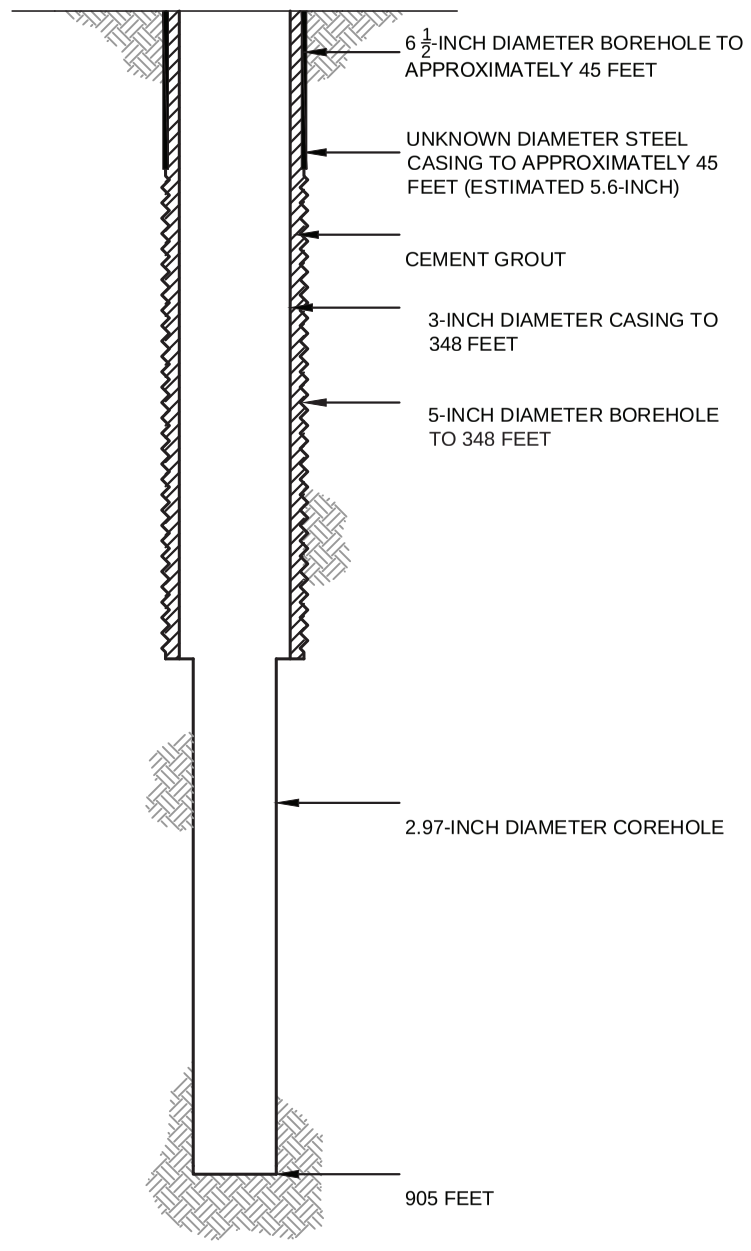

PROPOSED PLUGGING AND ABANDONMENT COREHOLE 347S

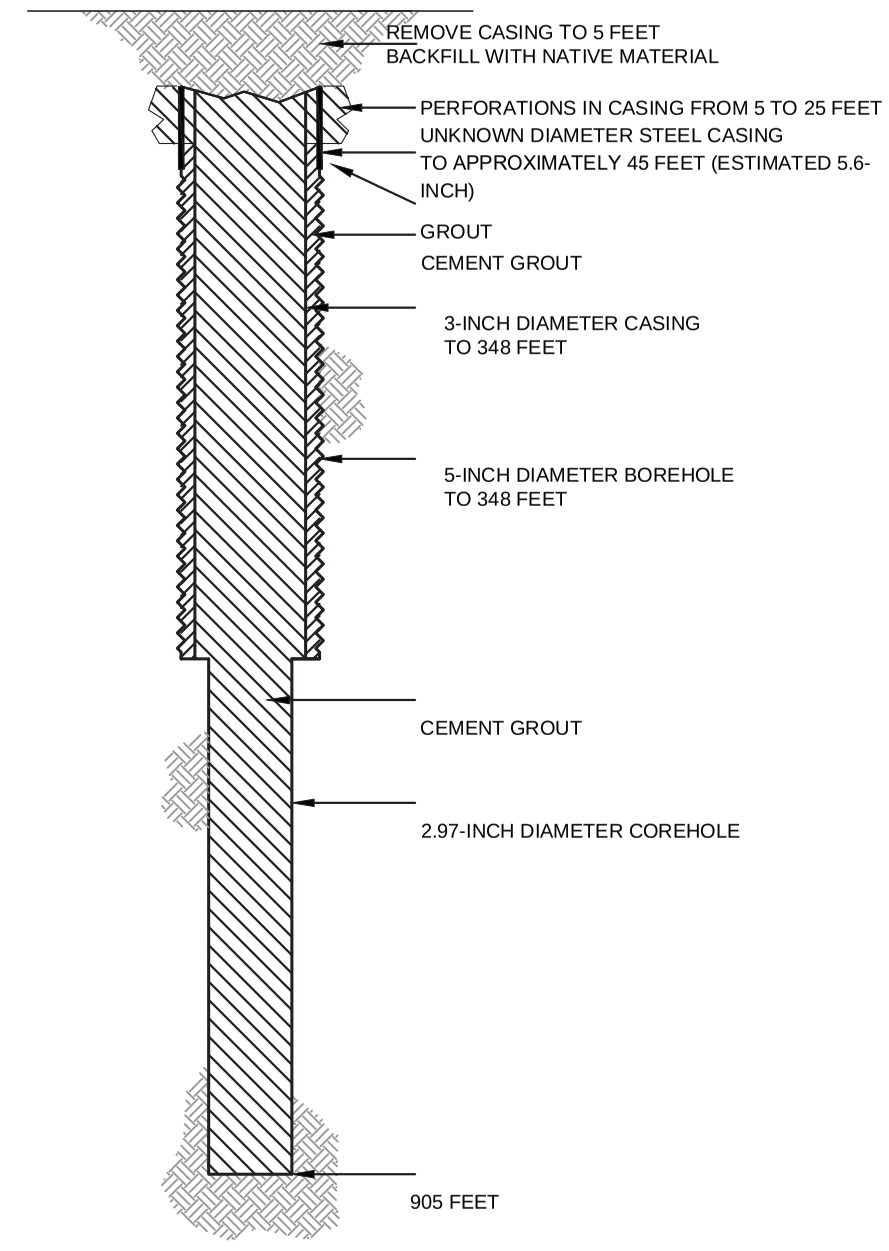

HALEY ALDRICH

FLORENCE COPPER, INC.
FLORENCE, ARIZONA

COREHOLE 347S DIAGRAM

FLORENCE COPPER INC.

NOT TO SCALE
SEPTEMBER 2019

FIGURE 1

MOBINI, GITA Printed: 4/21/2017 12:00 PM Layout: ABANDON (2)
\PROJECTS\CURIS RESOURCES38706-CURIS FEASIBILITY\DRAWINGS\EPA\WELL ABANDON\415S_ABANDON.DWG

OMB No. 2040-0042 Approval Expires 4/30/2022

United States Environmental Protection Agency

WELL REWORK RECORD, PLUGGING AND ABANDONMENT PLAN, OR PLUGGING AND ABANDONMENT AFFIDAVIT

Name and Address, Phone Number and/or Email of Permittee

Florence Copper Project
1575 W Hunt Hwy,
Florence, AZ 85132

Permit or EPA ID Number	API Number	Full Well Name
R9UIC-AZ3-FY11-1		348S

State	County
Arizona	Pinal

Locate well in two directions from nearest lines of quarter section and drilling unit

Latitude 33.05272769

Longitude -111.4301404

Surface Location

NE **1/4 of** SW **1/4 of Section** 28 **Township** 4S **Range** 9E

_____ **ft. from (N/S)** _____ **Line of quarter section**

_____ **ft. from (E/W)** _____ **Line of quarter section.**

Well Class	Timing of Action (pick one)	Type of Action (pick one)
☐ Class I ☐ Class II ☑ Class III ☐ Class V	☑ Notice Prior to Work Date Expected to Commence March 2021 ☐ Report After Work Date Work Ended	☐ Well Rework ☑ Plugging and Abandonment ☐ Conversion to a Non-Injection Well

Provide a narrative description of the work planned to be performed, or that was performed. Use additional pages as necessary. See instructions.

A workover rig capable of performing the required abandonment operations at the required depths will be moved in and set up over the core hole. The core hole will be inspected to determine the depth to which the hole remains open and if any obstructions are present in the core hole; the presence and condition of any existing collar will also be documented. If necessary, the core hole will be cleaned out to a depth of at least 100 feet below the bedrock-LBFU contact to enable placement of cement seals.

If collar is present, an attempt will be made to remove it. If removal of the collar is not feasible, it will be left in the hole and perforated as needed to allow an annular seal to be placed to a depth of at least 25 feet bgs. In areas of agricultural use, the surface casing will be cut at least 5 feet bgs and removed.

If the collar cannot be removed, it will be perforated from at least 20 feet below the bedrock-LBFU contact to at least 20 feet above the contact; from at least 20 feet below the base of the MFGU to at least 20 feet above the top of the MFGU; and from at least 25 feet bgs to 5 feet bgs.

A tremie pipe will be used to place Type V cement in the open core hole from the bottom of the core hole to the top of the core hole. Cement retainers, as described above, will be used to force cement grout into the annulus and behind perforated intervals, as necessary.

If the hole has been obstructed, as much cement as possible will be placed from 100 feet below the LBFU-bedrock contact to the top of the core hole.

The volume of Type V cement will be recorded and will not be less than the estimated volume of material required to fill each interval. All cement grout will consist of Type V cement, or equivalent approved in accordance with the UIC Permit.

Certification

I certify under the penalty of law that I have personally examined and am familiar with the information submitted in this document and all attachments and that, based on my inquiry of those individuals immediately responsible for obtaining the information, I believe that the information is true, accurate, and complete. I am aware that there are significant penalties for submitting false information, including the possibliity of fine and imprisonment. (Ref. 40 CFR § 144.32)

Name and Official Title *(Please type or print)*	Signature	Date Signed
Dan Johnson, VP - General Manager		10/3/2019

INSTRUCTIONS FOR FORM 7520-19

This form replaces forms 7520-12 and 7520-14. Use this form only when work is planned or has occurred that affects the well's construction or operation as an injection well, including work on the casing, tubing or packer (or for shallow Class V wells, the subsurface fluid emplacement network). Use one form per injection well. While reports or other information developed by contractors or service companies may be attached, this form must be signed by a responsible entity as described at 40 CFR 144.32. Note: operators closing Class V wells should use Form 7520-17.

NAME, ADDRESS, PHONE AND/OR EMAIL OF PERMITTEE: Enter the name and street address, city/town, state, and ZIP code of the permittee. Also provide an email address (if available) and/or a phone number.

PERMIT OR EPA ID NUMBER: Enter the well identification number or permit number assigned to the well by the EPA or the permitting authority.

API NUMBER: Enter the number assigned by the local jurisdiction (usually a State Oil and Gas Agency) using the American Petroleum Institute standard numbering system.

FULL WELL NAME: Enter the full name of the well or project.

Enter the **STATE** and **COUNTY** where the well is located. For States that do not have counties, use the name of that State's equivalent jurisdiction at a more local level.

WELL LOCATION: Fill in the complete township, range, and section to the nearest quarter-quarter section. A township is north or south of the baseline, and a range is east or west of the principal meridian (e.g., T12N, R34W). Also include the distance, in feet, from the nearest north or south line and nearest east or west line of the quarter-section. Also, enter the **latitude** and **longitude** of the well in decimal degrees, to five or six places if possible; be sure to include a negative sign for the longitude of a well in the Western Hemisphere and a negative sign for the latitude of a well in the Southern Hemisphere.

Enter the **WELL CLASS,** i.e., the class of injection well as defined in 40 CFR 144.6.

TIMING OF THE ACTION: Check ***Notice prior to work*** if the activity has not yet occurred (i.e., is planned). Check ***Report after work*** if the activity described has already occurred. As appropriate, include the date the activity is expected to start or the date the activity was completed. (Note this may not be available, e.g., for a plugging plan submitted with a permit application.)

TYPE OF ACTION: Check the appropriate box to describe the kind of activity being reported. Check ***Well Rework*** for work that was/will be performed on the well after it has already been in operation as an injection well. Check ***Plugging and Abandonment*** to report on plans for or descriptions of final closure/plugging after use as an injection well. Check ***Conversion to a Non-Injection Well*** if the well is to be converted to something other than an injection well.

Provide a **NARRATIVE DESCRIPTION** of the work planned to be performed, or that was performed. The narrative should include a description of the main procedures planned or that occurred during the work activity. A service company report, daily report, or similar document may be attached if it includes all the requested information and is clear and legible.

For well reworks, include the following information: The reason for the well rework; depths of activity; type of activity; changes to injection well configuration, well casing, or cement behind casing; any plug added to the well and its depth; any newly drilled interval and its depth; method(s) to demonstrate that the well has mechanical integrity (as applicable); and any deviations from the approved rework plan (as applicable).

For a well plugging plan, include the following information: Reason for the well plugging; number of plugs placed, and their depths; materials used as plugs (e.g., cast iron bridge plug, cement, cement retainer); method to set plugs; and wait-on-cement times, if any. Also provide one or more cost estimates from an independent firm in the business of plugging and abandoning wells to plug the well as described in the plan.

For well plugging affidavit, include the following information: Reason for the well plugging; number of plugs placed, and their depths; materials used as plugs (e.g., cast iron bridge plug, cement, cement retainer); method to set plugs; wait-on-cement times, if any; and any deviations from the approved plugging plan (if applicable).

For conversion to a non-injection well, include the following information: Depths of activity; type of activity; changes to injection well configuration, well casing, or cement behind casing; any plug added to the well and its depth; any newly drilled interval and its depth; depths of new perforations; and method(s) to demonstrate that the well has mechanical integrity (as applicable).

For all of the above activities, include a well sketch depicting the work, results of well tests/logging performed, service company tickets, and any other available information demonstrating how the work was/is to be performed. Also, specify whether depths are below ground surface, relative to Kelly bushing, etc.

CERTIFICATION: This form must be signed and dated by either: a responsible corporate officer for a corporation, by a general partner for a partnership, by the proprietor of a sole proprietorship, or by a principal executive or ranking elected official for a public agency.

PAPERWORK REDUCTION ACT NOTICE: The public reporting and recordkeeping burden for this collection of information is estimated to average between 6.0 and 7.9 hours per response, depending on the injection well class. Burden means the total time, effort, or financial resource expended by persons to generate, maintain, retain, or disclose or provide information to or for a Federal Agency. This includes the time needed to review instructions; develop, acquire, install, and utilize technology and systems for the purposes of collecting, validating, and verifying information, processing and maintaining information, and disclosing and providing information; adjust the existing ways to comply with any previously applicable instructions and requirements; train personnel to be able to respond to the collection of information; search data sources; complete and review the collection of information; and, transmit or otherwise disclose the information. An agency may not conduct or sponsor, and a person is not required to respond to, a collection of information unless it displays a currently valid OMB control number. Send comments on the Agency's need for this information, the accuracy of the provided burden estimates, and any suggested methods for minimizing respondent burden, including the use of automated collection techniques to Director, Collection Strategies Division, U.S. Environmental Protection Agency (2822), 1200 Pennsylvania Ave., NW., Washington, D.C. 20460. Include the OMB control number in any correspondence. Do not send the completed forms to this address.

AS-BUILT COREHOLE 348S

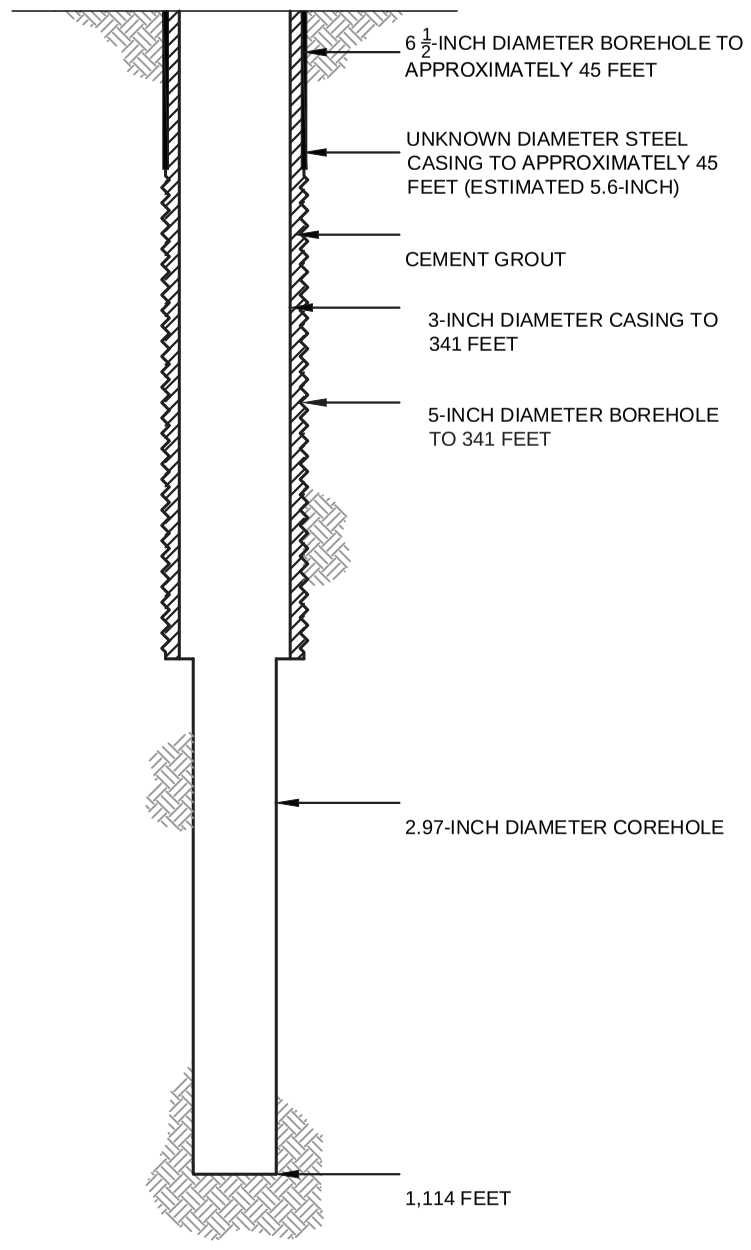

PROPOSED PLUGGING AND ABANDONMENT COREHOLE 348S

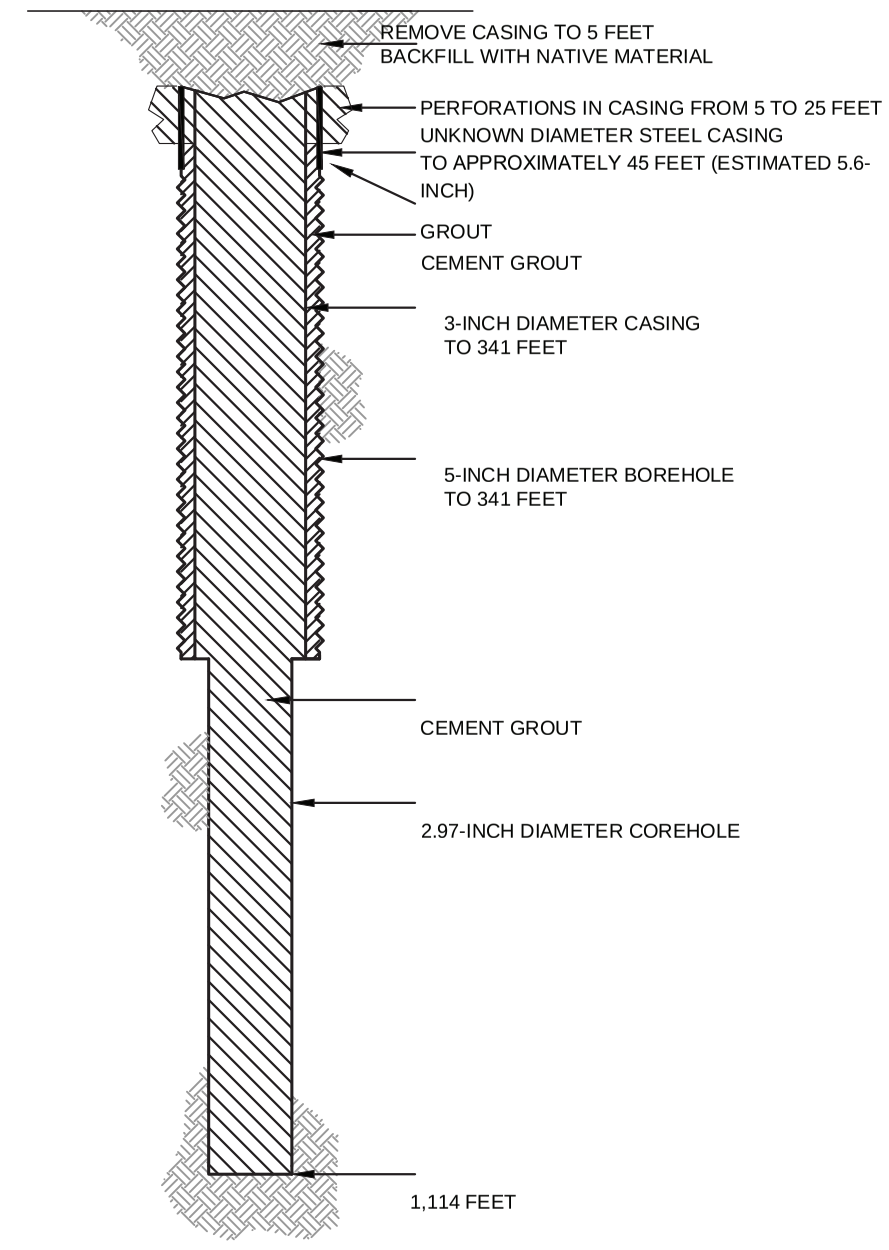

HALEY ALDRICH

FLORENCE COPPER, INC.
FLORENCE, ARIZONA

COREHOLE 348S DIAGRAM

FLORENCE COPPER INC.

NOT TO SCALE
SEPTEMBER 2019

FIGURE 1

MOBINI, GITA Printed: 4/21/2017 12:00 PM Layout: ABANDON (2)
\PROJECTS\CURIS RESOURCES38706-CURIS FEASIBILITY\DRAWINGS\EPA\WELL ABANDON\415S_ABANDON.DWG

OMB No. 2040-0042 Approval Expires 4/30/2022

United States Environmental Protection Agency

WELL REWORK RECORD, PLUGGING AND ABANDONMENT PLAN, OR PLUGGING AND ABANDONMENT AFFIDAVIT

Name and Address, Phone Number and/or Email of Permittee

Florence Copper Project
1575 W Hunt Hwy,
Florence, AZ 85132

Permit or EPA ID Number	API Number	Full Well Name
R9UIC-AZ3-FY11-1		349S

State	County
Arizona	Pinal

Locate well in two directions from nearest lines of quarter section and drilling unit

Latitude 33.05213104

Longitude -111.4297357

Surface Location

NW **1/4 of** SE **1/4 of Section** 28 **Township** 4S **Range** 9E

_____ **ft. from (N/S)** _____ **Line of quarter section**

_____ **ft. from (E/W)** _____ **Line of quarter section.**

Well Class	Timing of Action (pick one)	Type of Action (pick one)
☐ Class I ☐ Class II ☑ Class III ☐ Class V	☑ Notice Prior to Work Date Expected to Commence March 2021 ☐ Report After Work Date Work Ended	☐ Well Rework ☑ Plugging and Abandonment ☐ Conversion to a Non-Injection Well

Provide a narrative description of the work planned to be performed, or that was performed. Use additional pages as necessary. See instructions.

A workover rig capable of performing the required abandonment operations at the required depths will be moved in and set up over the core hole. The core hole will be inspected to determine the depth to which the hole remains open and if any obstructions are present in the core hole; the presence and condition of any existing collar will also be documented. If necessary, the core hole will be cleaned out to a depth of at least 100 feet below the bedrock-LBFU contact to enable placement of cement seals.

If collar is present, an attempt will be made to remove it. If removal of the collar is not feasible, it will be left in the hole and perforated as needed to allow an annular seal to be placed to a depth of at least 25 feet bgs. In areas of agricultural use, the surface casing will be cut at least 5 feet bgs and removed.

If the collar cannot be removed, it will be perforated from at least 20 feet below the bedrock-LBFU contact to at least 20 feet above the contact; from at least 20 feet below the base of the MFGU to at least 20 feet above the top of the MFGU; and from at least 25 feet bgs to 5 feet bgs.

A tremie pipe will be used to place Type V cement in the open core hole from the bottom of the core hole to the top of the core hole. Cement retainers, as described above, will be used to force cement grout into the annulus and behind perforated intervals, as necessary.

If the hole has been obstructed, as much cement as possible will be placed from 100 feet below the LBFU-bedrock contact to the top of the core hole.

The volume of Type V cement will be recorded and will not be less than the estimated volume of material required to fill each interval. All cement grout will consist of Type V cement, or equivalent approved in accordance with the UIC Permit.

Certification

I certify under the penalty of law that I have personally examined and am familiar with the information submitted in this document and all attachments and that, based on my inquiry of those individuals immediately responsible for obtaining the information, I believe that the information is true, accurate, and complete. I am aware that there are significant penalties for submitting false information, including the possibliity of fine and imprisonment. (Ref. 40 CFR § 144.32)

Name and Official Title *(Please type or print)*	Signature	Date Signed
Dan Johnson, VP - General Manager		10/3/2019

INSTRUCTIONS FOR FORM 7520-19

This form replaces forms 7520-12 and 7520-14. Use this form only when work is planned or has occurred that affects the well's construction or operation as an injection well, including work on the casing, tubing or packer (or for shallow Class V wells, the subsurface fluid emplacement network). Use one form per injection well. While reports or other information developed by contractors or service companies may be attached, this form must be signed by a responsible entity as described at 40 CFR 144.32. Note: operators closing Class V wells should use Form 7520-17.

NAME, ADDRESS, PHONE AND/OR EMAIL OF PERMITTEE: Enter the name and street address, city/town, state, and ZIP code of the permittee. Also provide an email address (if available) and/or a phone number.

PERMIT OR EPA ID NUMBER: Enter the well identification number or permit number assigned to the well by the EPA or the permitting authority.

API NUMBER: Enter the number assigned by the local jurisdiction (usually a State Oil and Gas Agency) using the American Petroleum Institute standard numbering system.

FULL WELL NAME: Enter the full name of the well or project.

Enter the **STATE** and **COUNTY** where the well is located. For States that do not have counties, use the name of that State's equivalent jurisdiction at a more local level.

WELL LOCATION: Fill in the complete township, range, and section to the nearest quarter-quarter section. A township is north or south of the baseline, and a range is east or west of the principal meridian (e.g., T12N, R34W). Also include the distance, in feet, from the nearest north or south line and nearest east or west line of the quarter-section. Also, enter the **latitude** and **longitude** of the well in decimal degrees, to five or six places if possible; be sure to include a negative sign for the longitude of a well in the Western Hemisphere and a negative sign for the latitude of a well in the Southern Hemisphere.

Enter the **WELL CLASS,** i.e., the class of injection well as defined in 40 CFR 144.6.

TIMING OF THE ACTION: Check ***Notice prior to work*** if the activity has not yet occurred (i.e., is planned). Check ***Report after work*** if the activity described has already occurred. As appropriate, include the date the activity is expected to start or the date the activity was completed. (Note this may not be available, e.g., for a plugging plan submitted with a permit application.)

TYPE OF ACTION: Check the appropriate box to describe the kind of activity being reported. Check ***Well Rework*** for work that was/will be performed on the well after it has already been in operation as an injection well. Check ***Plugging and Abandonment*** to report on plans for or descriptions of final closure/plugging after use as an injection well. Check ***Conversion to a Non-Injection Well*** if the well is to be converted to something other than an injection well.

Provide a **NARRATIVE DESCRIPTION** of the work planned to be performed, or that was performed. The narrative should include a description of the main procedures planned or that occurred during the work activity. A service company report, daily report, or similar document may be attached if it includes all the requested information and is clear and legible.

For well reworks, include the following information: The reason for the well rework; depths of activity; type of activity; changes to injection well configuration, well casing, or cement behind casing; any plug added to the well and its depth; any newly drilled interval and its depth; method(s) to demonstrate that the well has mechanical integrity (as applicable); and any deviations from the approved rework plan (as applicable).

For a well plugging plan, include the following information: Reason for the well plugging; number of plugs placed, and their depths; materials used as plugs (e.g., cast iron bridge plug, cement, cement retainer); method to set plugs; and wait-on-cement times, if any. Also provide one or more cost estimates from an independent firm in the business of plugging and abandoning wells to plug the well as described in the plan.

For well plugging affidavit, include the following information: Reason for the well plugging; number of plugs placed, and their depths; materials used as plugs (e.g., cast iron bridge plug, cement, cement retainer); method to set plugs; wait-on-cement times, if any; and any deviations from the approved plugging plan (if applicable).

For conversion to a non-injection well, include the following information: Depths of activity; type of activity; changes to injection well configuration, well casing, or cement behind casing; any plug added to the well and its depth; any newly drilled interval and its depth; depths of new perforations; and method(s) to demonstrate that the well has mechanical integrity (as applicable).

For all of the above activities, include a well sketch depicting the work, results of well tests/logging performed, service company tickets, and any other available information demonstrating how the work was/is to be performed. Also, specify whether depths are below ground surface, relative to Kelly bushing, etc.

CERTIFICATION: This form must be signed and dated by either: a responsible corporate officer for a corporation, by a general partner for a partnership, by the proprietor of a sole proprietorship, or by a principal executive or ranking elected official for a public agency.

PAPERWORK REDUCTION ACT NOTICE: The public reporting and recordkeeping burden for this collection of information is estimated to average between 6.0 and 7.9 hours per response, depending on the injection well class. Burden means the total time, effort, or financial resource expended by persons to generate, maintain, retain, or disclose or provide information to or for a Federal Agency. This includes the time needed to review instructions; develop, acquire, install, and utilize technology and systems for the purposes of collecting, validating, and verifying information, processing and maintaining information, and disclosing and providing information; adjust the existing ways to comply with any previously applicable instructions and requirements; train personnel to be able to respond to the collection of information; search data sources; complete and review the collection of information; and, transmit or otherwise disclose the information. An agency may not conduct or sponsor, and a person is not required to respond to, a collection of information unless it displays a currently valid OMB control number. Send comments on the Agency's need for this information, the accuracy of the provided burden estimates, and any suggested methods for minimizing respondent burden, including the use of automated collection techniques to Director, Collection Strategies Division, U.S. Environmental Protection Agency (2822), 1200 Pennsylvania Ave., NW., Washington, D.C. 20460. Include the OMB control number in any correspondence. Do not send the completed forms to this address.

AS-BUILT COREHOLE 349S

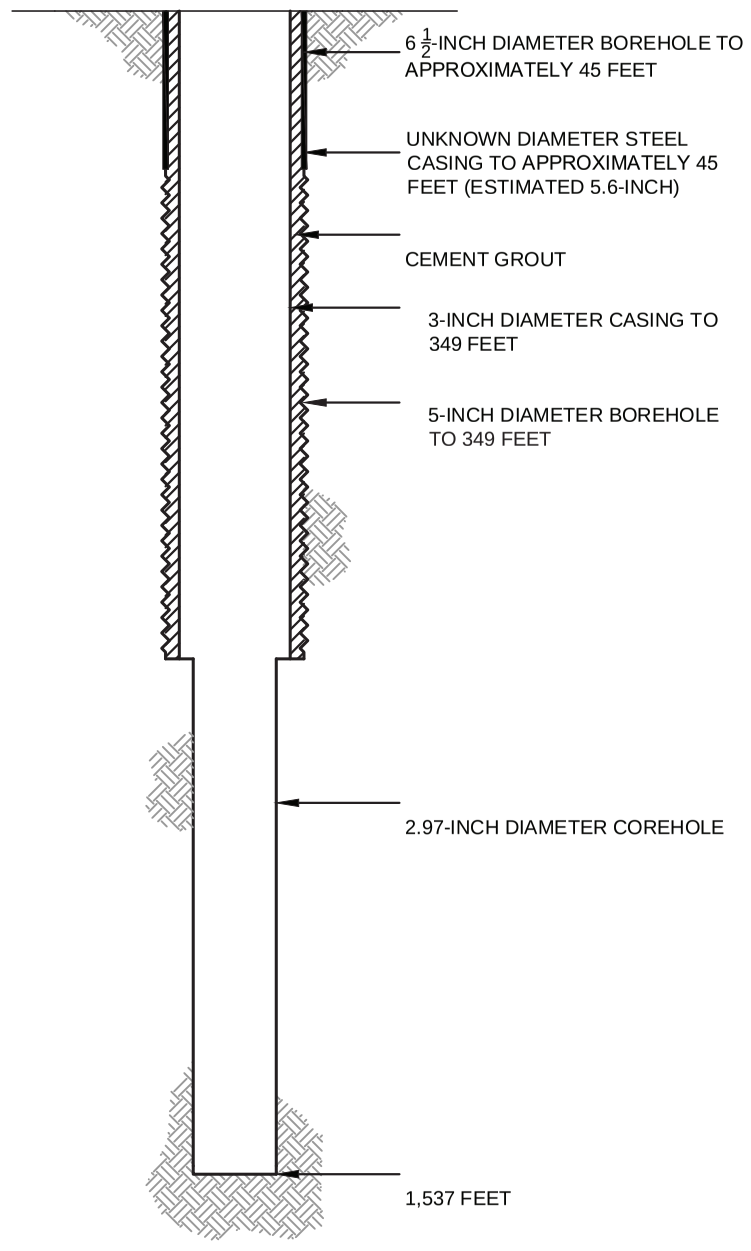

PROPOSED PLUGGING AND ABANDONMENT COREHOLE 349S

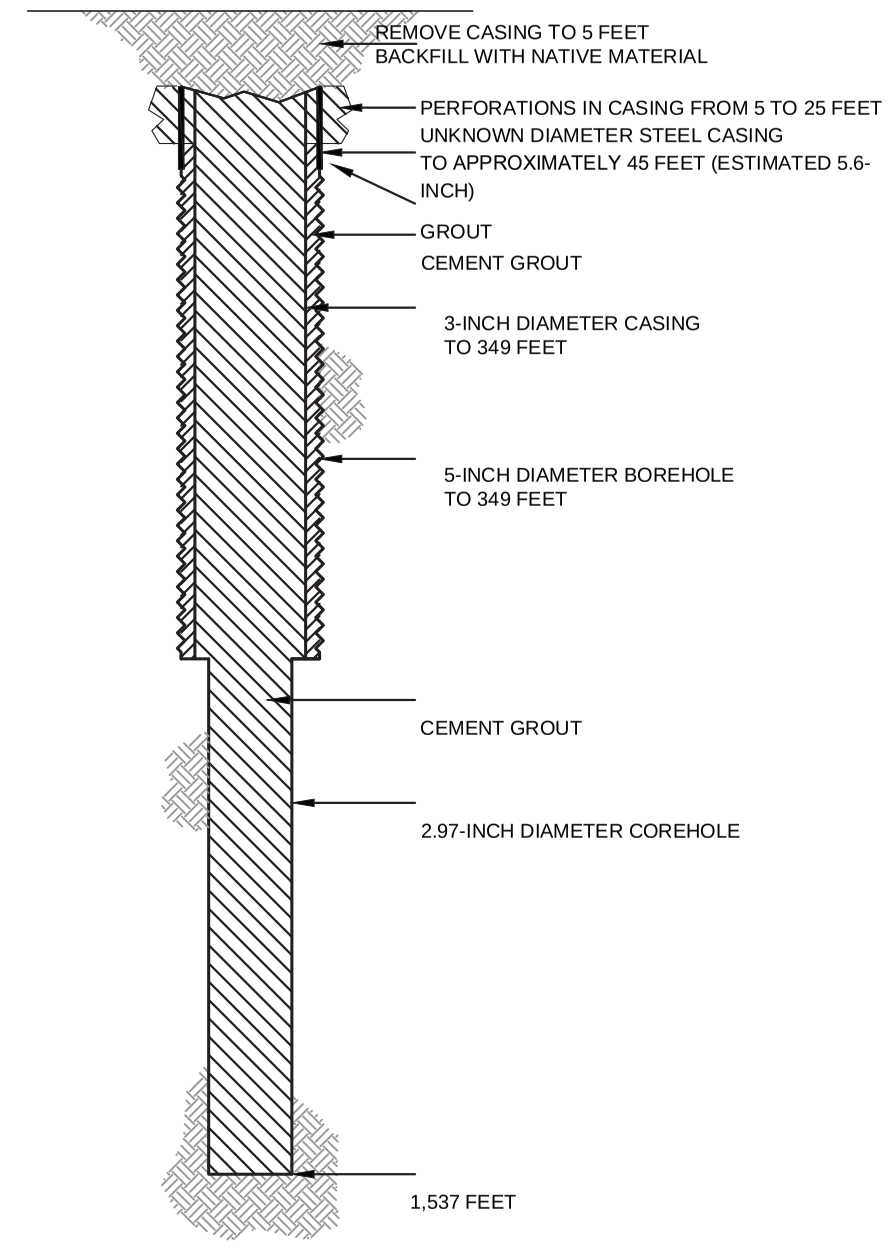

HALEY ALDRICH

FLORENCE COPPER, INC.
FLORENCE, ARIZONA

COREHOLE 349S DIAGRAM

FLORENCE COPPER INC.

NOT TO SCALE
SEPTEMBER 2019

FIGURE 1

MOBINI, GITA Printed: 4/21/2017 12:00 PM Layout: ABANDON (2)
\PROJECTS\CURIS RESOURCES38706-CURIS FEASIBILITY\DRAWINGS\EPA\WELL ABANDON\415S_ABANDON.DWG

OMB No. 2040-0042 Approval Expires 4/30/2022

United States Environmental Protection Agency

WELL REWORK RECORD, PLUGGING AND ABANDONMENT PLAN, OR PLUGGING AND ABANDONMENT AFFIDAVIT

Name and Address, Phone Number and/or Email of Permittee

Florence Copper Project
1575 W Hunt Hwy,
Florence, AZ 85132

Permit or EPA ID Number	API Number	Full Well Name
R9UIC-AZ3-FY11-1		350S

State	County
Arizona	Pinal

Locate well in two directions from nearest lines of quarter section and drilling unit

Latitude 33.05153757

Longitude -111.430147

Surface Location

NE **1/4 of** SW **1/4 of Section** 28 **Township** 4S **Range** 9E

_____ **ft. from (N/S)** _____ **Line of quarter section**

_____ **ft. from (E/W)** _____ **Line of quarter section.**

Well Class	Timing of Action (pick one)	Type of Action (pick one)
☐ Class I ☐ Class II ☑ Class III ☐ Class V	☑ Notice Prior to Work Date Expected to Commence March 2021 ☐ Report After Work Date Work Ended	☐ Well Rework ☑ Plugging and Abandonment ☐ Conversion to a Non-Injection Well

Provide a narrative description of the work planned to be performed, or that was performed. Use additional pages as necessary. See instructions.

A workover rig capable of performing the required abandonment operations at the required depths will be moved in and set up over the core hole. The core hole will be inspected to determine the depth to which the hole remains open and if any obstructions are present in the core hole; the presence and condition of any existing collar will also be documented. If necessary, the core hole will be cleaned out to a depth of at least 100 feet below the bedrock-LBFU contact to enable placement of cement seals.

If collar is present, an attempt will be made to remove it. If removal of the collar is not feasible, it will be left in the hole and perforated as needed to allow an annular seal to be placed to a depth of at least 25 feet bgs. In areas of agricultural use, the surface casing will be cut at least 5 feet bgs and removed.

If the collar cannot be removed, it will be perforated from at least 20 feet below the bedrock-LBFU contact to at least 20 feet above the contact; from at least 20 feet below the base of the MFGU to at least 20 feet above the top of the MFGU; and from at least 25 feet bgs to 5 feet bgs.

A tremie pipe will be used to place Type V cement in the open core hole from the bottom of the core hole to the top of the core hole. Cement retainers, as described above, will be used to force cement grout into the annulus and behind perforated intervals, as necessary.

If the hole has been obstructed, as much cement as possible will be placed from 100 feet below the LBFU-bedrock contact to the top of the core hole.

The volume of Type V cement will be recorded and will not be less than the estimated volume of material required to fill each interval. All cement grout will consist of Type V cement, or equivalent approved in accordance with the UIC Permit.

Certification

I certify under the penalty of law that I have personally examined and am familiar with the information submitted in this document and all attachments and that, based on my inquiry of those individuals immediately responsible for obtaining the information, I believe that the information is true, accurate, and complete. I am aware that there are significant penalties for submitting false information, including the possibliity of fine and imprisonment. (Ref. 40 CFR § 144.32)

Name and Official Title *(Please type or print)*	Signature	Date Signed
Dan Johnson, VP - General Manager		10/3/2019

INSTRUCTIONS FOR FORM 7520-19

This form replaces forms 7520-12 and 7520-14. Use this form only when work is planned or has occurred that affects the well's construction or operation as an injection well, including work on the casing, tubing or packer (or for shallow Class V wells, the subsurface fluid emplacement network). Use one form per injection well. While reports or other information developed by contractors or service companies may be attached, this form must be signed by a responsible entity as described at 40 CFR 144.32. Note: operators closing Class V wells should use Form 7520-17.

NAME, ADDRESS, PHONE AND/OR EMAIL OF PERMITTEE: Enter the name and street address, city/town, state, and ZIP code of the permittee. Also provide an email address (if available) and/or a phone number.

PERMIT OR EPA ID NUMBER: Enter the well identification number or permit number assigned to the well by the EPA or the permitting authority.

API NUMBER: Enter the number assigned by the local jurisdiction (usually a State Oil and Gas Agency) using the American Petroleum Institute standard numbering system.

FULL WELL NAME: Enter the full name of the well or project.

Enter the **STATE** and **COUNTY** where the well is located. For States that do not have counties, use the name of that State's equivalent jurisdiction at a more local level.

WELL LOCATION: Fill in the complete township, range, and section to the nearest quarter-quarter section. A township is north or south of the baseline, and a range is east or west of the principal meridian (e.g., T12N, R34W). Also include the distance, in feet, from the nearest north or south line and nearest east or west line of the quarter-section. Also, enter the **latitude** and **longitude** of the well in decimal degrees, to five or six places if possible; be sure to include a negative sign for the longitude of a well in the Western Hemisphere and a negative sign for the latitude of a well in the Southern Hemisphere.

Enter the **WELL CLASS,** i.e., the class of injection well as defined in 40 CFR 144.6.

TIMING OF THE ACTION: Check ***Notice prior to work*** if the activity has not yet occurred (i.e., is planned). Check ***Report after work*** if the activity described has already occurred. As appropriate, include the date the activity is expected to start or the date the activity was completed. (Note this may not be available, e.g., for a plugging plan submitted with a permit application.)

TYPE OF ACTION: Check the appropriate box to describe the kind of activity being reported. Check ***Well Rework*** for work that was/will be performed on the well after it has already been in operation as an injection well. Check ***Plugging and Abandonment*** to report on plans for or descriptions of final closure/plugging after use as an injection well. Check ***Conversion to a Non-Injection Well*** if the well is to be converted to something other than an injection well.

Provide a **NARRATIVE DESCRIPTION** of the work planned to be performed, or that was performed. The narrative should include a description of the main procedures planned or that occurred during the work activity. A service company report, daily report, or similar document may be attached if it includes all the requested information and is clear and legible.

For well reworks, include the following information: The reason for the well rework; depths of activity; type of activity; changes to injection well configuration, well casing, or cement behind casing; any plug added to the well and its depth; any newly drilled interval and its depth; method(s) to demonstrate that the well has mechanical integrity (as applicable); and any deviations from the approved rework plan (as applicable).

For a well plugging plan, include the following information: Reason for the well plugging; number of plugs placed, and their depths; materials used as plugs (e.g., cast iron bridge plug, cement, cement retainer); method to set plugs; and wait-on-cement times, if any. Also provide one or more cost estimates from an independent firm in the business of plugging and abandoning wells to plug the well as described in the plan.

For well plugging affidavit, include the following information: Reason for the well plugging; number of plugs placed, and their depths; materials used as plugs (e.g., cast iron bridge plug, cement, cement retainer); method to set plugs; wait-on-cement times, if any; and any deviations from the approved plugging plan (if applicable).

For conversion to a non-injection well, include the following information: Depths of activity; type of activity; changes to injection well configuration, well casing, or cement behind casing; any plug added to the well and its depth; any newly drilled interval and its depth; depths of new perforations; and method(s) to demonstrate that the well has mechanical integrity (as applicable).

For all of the above activities, include a well sketch depicting the work, results of well tests/logging performed, service company tickets, and any other available information demonstrating how the work was/is to be performed. Also, specify whether depths are below ground surface, relative to Kelly bushing, etc.

CERTIFICATION: This form must be signed and dated by either: a responsible corporate officer for a corporation, by a general partner for a partnership, by the proprietor of a sole proprietorship, or by a principal executive or ranking elected official for a public agency.

PAPERWORK REDUCTION ACT NOTICE: The public reporting and recordkeeping burden for this collection of information is estimated to average between 6.0 and 7.9 hours per response, depending on the injection well class. Burden means the total time, effort, or financial resource expended by persons to generate, maintain, retain, or disclose or provide information to or for a Federal Agency. This includes the time needed to review instructions; develop, acquire, install, and utilize technology and systems for the purposes of collecting, validating, and verifying information, processing and maintaining information, and disclosing and providing information; adjust the existing ways to comply with any previously applicable instructions and requirements; train personnel to be able to respond to the collection of information; search data sources; complete and review the collection of information; and, transmit or otherwise disclose the information. An agency may not conduct or sponsor, and a person is not required to respond to, a collection of information unless it displays a currently valid OMB control number. Send comments on the Agency's need for this information, the accuracy of the provided burden estimates, and any suggested methods for minimizing respondent burden, including the use of automated collection techniques to Director, Collection Strategies Division, U.S. Environmental Protection Agency (2822), 1200 Pennsylvania Ave., NW., Washington, D.C. 20460. Include the OMB control number in any correspondence. Do not send the completed forms to this address.

AS-BUILT COREHOLE 350S

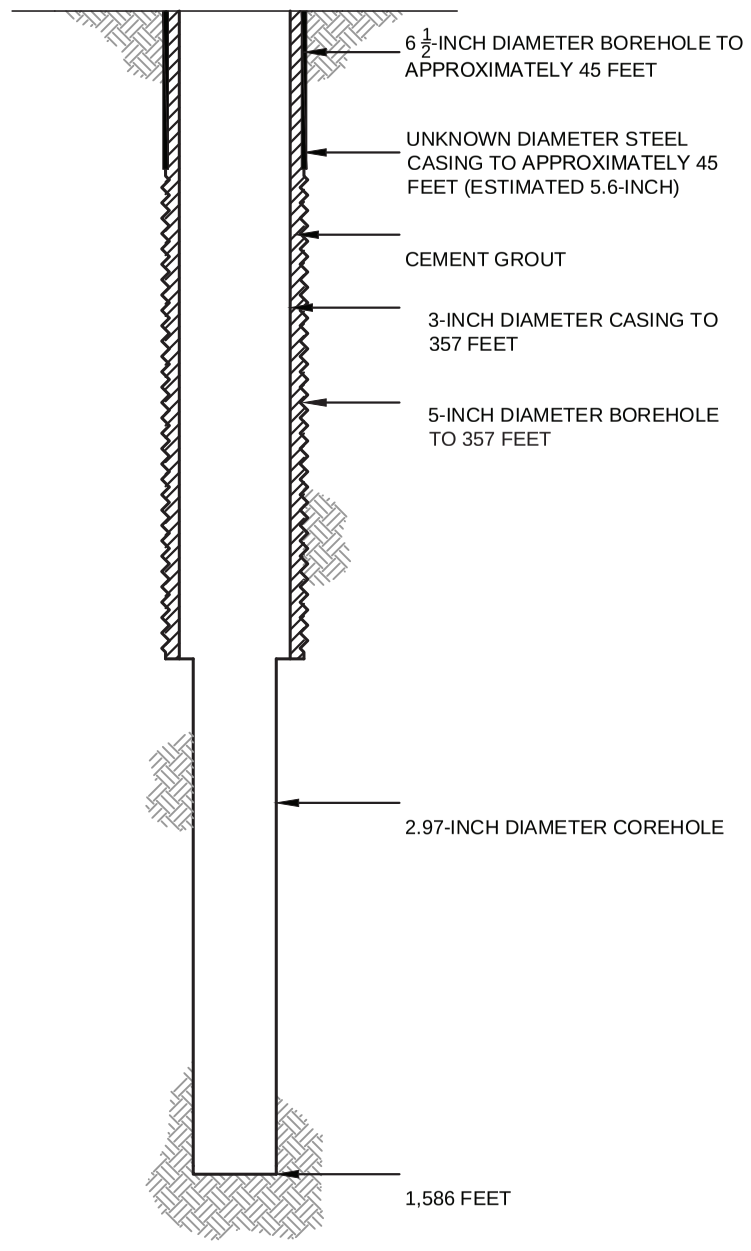

PROPOSED PLUGGING AND ABANDONMENT COREHOLE 350S

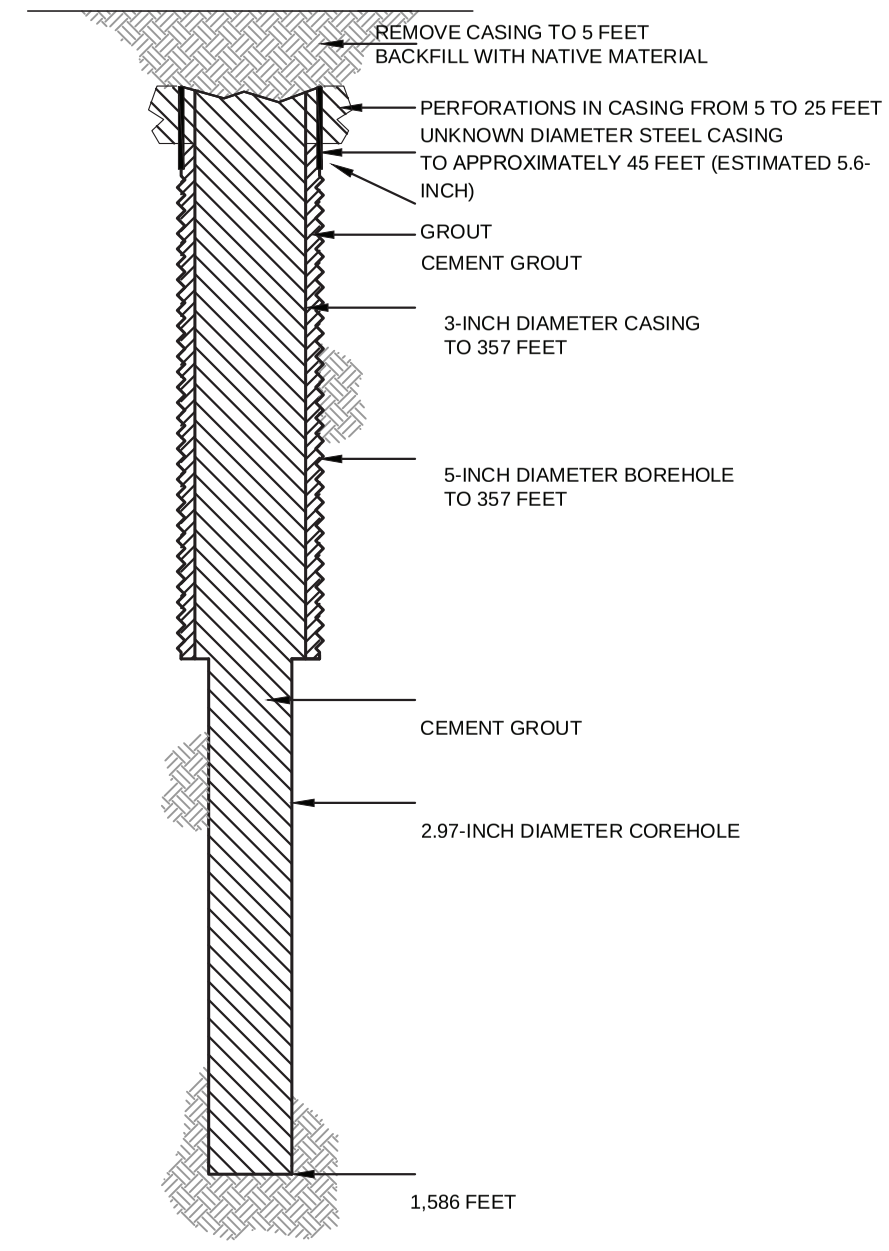

HALEY ALDRICH

FLORENCE COPPER, INC.
FLORENCE, ARIZONA

COREHOLE 350S DIAGRAM

FLORENCE COPPER INC.

NOT TO SCALE
SEPTEMBER 2019

FIGURE 1

MOBINI, GITA Printed: 4/21/2017 12:00 PM Layout: ABANDON (2)
\PROJECTS\CURIS RESOURCES38706-CURIS FEASIBILITY\DRAWINGS\EPA\WELL ABANDON\415S_ABANDON.DWG

OMB No. 2040-0042 Approval Expires 4/30/2022

United States Environmental Protection Agency

WELL REWORK RECORD, PLUGGING AND ABANDONMENT PLAN, OR PLUGGING AND ABANDONMENT AFFIDAVIT

Name and Address, Phone Number and/or Email of Permittee

Florence Copper Project
1575 W Hunt Hwy,
Florence, AZ 85132

Permit or EPA ID Number	API Number	Full Well Name
R9UIC-AZ3-FY11-1		351S

State	County
Arizona	Pinal

Locate well in two directions from nearest lines of quarter section and drilling unit

Latitude 33.05273087

Surface Location

NE **1/4 of** SW **1/4 of Section** 28 **Township** 4S **Range** 9E

Longitude -111.4309563

_____ **ft. from (N/S)** _____ **Line of quarter section**

_____ **ft. from (E/W)** _____ **Line of quarter section.**

Well Class	Timing of Action (pick one)	Type of Action (pick one)
☐ Class I ☐ Class II ☑ Class III ☐ Class V	☑ Notice Prior to Work Date Expected to Commence March 2021 ☐ Report After Work Date Work Ended	☐ Well Rework ☑ Plugging and Abandonment ☐ Conversion to a Non-Injection Well

Provide a narrative description of the work planned to be performed, or that was performed. Use additional pages as necessary. See instructions.

A workover rig capable of performing the required abandonment operations at the required depths will be moved in and set up over the core hole. The core hole will be inspected to determine the depth to which the hole remains open and if any obstructions are present in the core hole; the presence and condition of any existing collar will also be documented. If necessary, the core hole will be cleaned out to a depth of at least 100 feet below the bedrock-LBFU contact to enable placement of cement seals.

If collar is present, an attempt will be made to remove it. If removal of the collar is not feasible, it will be left in the hole and perforated as needed to allow an annular seal to be placed to a depth of at least 25 feet bgs. In areas of agricultural use, the surface casing will be cut at least 5 feet bgs and removed.

If the collar cannot be removed, it will be perforated from at least 20 feet below the bedrock-LBFU contact to at least 20 feet above the contact; from at least 20 feet below the base of the MFGU to at least 20 feet above the top of the MFGU; and from at least 25 feet bgs to 5 feet bgs.

A tremie pipe will be used to place Type V cement in the open core hole from the bottom of the core hole to the top of the core hole. Cement retainers, as described above, will be used to force cement grout into the annulus and behind perforated intervals, as necessary.

If the hole has been obstructed, as much cement as possible will be placed from 100 feet below the LBFU-bedrock contact to the top of the core hole.

The volume of Type V cement will be recorded and will not be less than the estimated volume of material required to fill each interval. All cement grout will consist of Type V cement, or equivalent approved in accordance with the UIC Permit.

Certification

I certify under the penalty of law that I have personally examined and am familiar with the information submitted in this document and all attachments and that, based on my inquiry of those individuals immediately responsible for obtaining the information, I believe that the information is true, accurate, and complete. I am aware that there are significant penalties for submitting false information, including the possibliity of fine and imprisonment. (Ref. 40 CFR § 144.32)

Name and Official Title *(Please type or print)*	Signature	Date Signed
Dan Johnson, VP - General Manager		10/3/2019

INSTRUCTIONS FOR FORM 7520-19

This form replaces forms 7520-12 and 7520-14. Use this form only when work is planned or has occurred that affects the well's construction or operation as an injection well, including work on the casing, tubing or packer (or for shallow Class V wells, the subsurface fluid emplacement network). Use one form per injection well. While reports or other information developed by contractors or service companies may be attached, this form must be signed by a responsible entity as described at 40 CFR 144.32. Note: operators closing Class V wells should use Form 7520-17.

NAME, ADDRESS, PHONE AND/OR EMAIL OF PERMITTEE: Enter the name and street address, city/town, state, and ZIP code of the permittee. Also provide an email address (if available) and/or a phone number.

PERMIT OR EPA ID NUMBER: Enter the well identification number or permit number assigned to the well by the EPA or the permitting authority.

API NUMBER: Enter the number assigned by the local jurisdiction (usually a State Oil and Gas Agency) using the American Petroleum Institute standard numbering system.

FULL WELL NAME: Enter the full name of the well or project.

Enter the **STATE** and **COUNTY** where the well is located. For States that do not have counties, use the name of that State's equivalent jurisdiction at a more local level.

WELL LOCATION: Fill in the complete township, range, and section to the nearest quarter-quarter section. A township is north or south of the baseline, and a range is east or west of the principal meridian (e.g., T12N, R34W). Also include the distance, in feet, from the nearest north or south line and nearest east or west line of the quarter-section. Also, enter the **latitude** and **longitude** of the well in decimal degrees, to five or six places if possible; be sure to include a negative sign for the longitude of a well in the Western Hemisphere and a negative sign for the latitude of a well in the Southern Hemisphere.

Enter the **WELL CLASS,** i.e., the class of injection well as defined in 40 CFR 144.6.

TIMING OF THE ACTION: Check ***Notice prior to work*** if the activity has not yet occurred (i.e., is planned). Check ***Report after work*** if the activity described has already occurred. As appropriate, include the date the activity is expected to start or the date the activity was completed. (Note this may not be available, e.g., for a plugging plan submitted with a permit application.)

TYPE OF ACTION: Check the appropriate box to describe the kind of activity being reported. Check ***Well Rework*** for work that was/will be performed on the well after it has already been in operation as an injection well. Check ***Plugging and Abandonment*** to report on plans for or descriptions of final closure/plugging after use as an injection well. Check ***Conversion to a Non-Injection Well*** if the well is to be converted to something other than an injection well.

Provide a **NARRATIVE DESCRIPTION** of the work planned to be performed, or that was performed. The narrative should include a description of the main procedures planned or that occurred during the work activity. A service company report, daily report, or similar document may be attached if it includes all the requested information and is clear and legible.

For well reworks, include the following information: The reason for the well rework; depths of activity; type of activity; changes to injection well configuration, well casing, or cement behind casing; any plug added to the well and its depth; any newly drilled interval and its depth; method(s) to demonstrate that the well has mechanical integrity (as applicable); and any deviations from the approved rework plan (as applicable).

For a well plugging plan, include the following information: Reason for the well plugging; number of plugs placed, and their depths; materials used as plugs (e.g., cast iron bridge plug, cement, cement retainer); method to set plugs; and wait-on-cement times, if any. Also provide one or more cost estimates from an independent firm in the business of plugging and abandoning wells to plug the well as described in the plan.

For well plugging affidavit, include the following information: Reason for the well plugging; number of plugs placed, and their depths; materials used as plugs (e.g., cast iron bridge plug, cement, cement retainer); method to set plugs; wait-on-cement times, if any; and any deviations from the approved plugging plan (if applicable).

For conversion to a non-injection well, include the following information: Depths of activity; type of activity; changes to injection well configuration, well casing, or cement behind casing; any plug added to the well and its depth; any newly drilled interval and its depth; depths of new perforations; and method(s) to demonstrate that the well has mechanical integrity (as applicable).

For all of the above activities, include a well sketch depicting the work, results of well tests/logging performed, service company tickets, and any other available information demonstrating how the work was/is to be performed. Also, specify whether depths are below ground surface, relative to Kelly bushing, etc.

CERTIFICATION: This form must be signed and dated by either: a responsible corporate officer for a corporation, by a general partner for a partnership, by the proprietor of a sole proprietorship, or by a principal executive or ranking elected official for a public agency.

PAPERWORK REDUCTION ACT NOTICE: The public reporting and recordkeeping burden for this collection of information is estimated to average between 6.0 and 7.9 hours per response, depending on the injection well class. Burden means the total time, effort, or financial resource expended by persons to generate, maintain, retain, or disclose or provide information to or for a Federal Agency. This includes the time needed to review instructions; develop, acquire, install, and utilize technology and systems for the purposes of collecting, validating, and verifying information, processing and maintaining information, and disclosing and providing information; adjust the existing ways to comply with any previously applicable instructions and requirements; train personnel to be able to respond to the collection of information; search data sources; complete and review the collection of information; and, transmit or otherwise disclose the information. An agency may not conduct or sponsor, and a person is not required to respond to, a collection of information unless it displays a currently valid OMB control number. Send comments on the Agency's need for this information, the accuracy of the provided burden estimates, and any suggested methods for minimizing respondent burden, including the use of automated collection techniques to Director, Collection Strategies Division, U.S. Environmental Protection Agency (2822), 1200 Pennsylvania Ave., NW., Washington, D.C. 20460. Include the OMB control number in any correspondence. Do not send the completed forms to this address.

AS-BUILT COREHOLE 351S

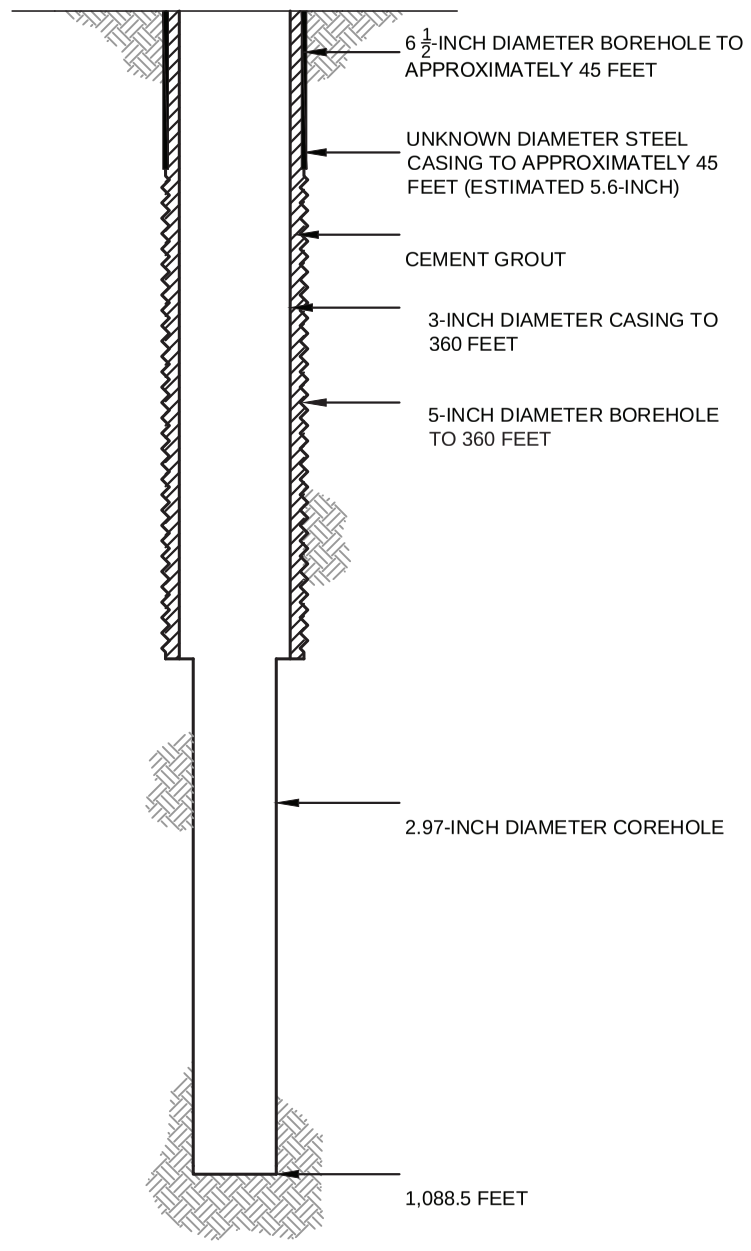

PROPOSED PLUGGING AND ABANDONMENT COREHOLE 351S

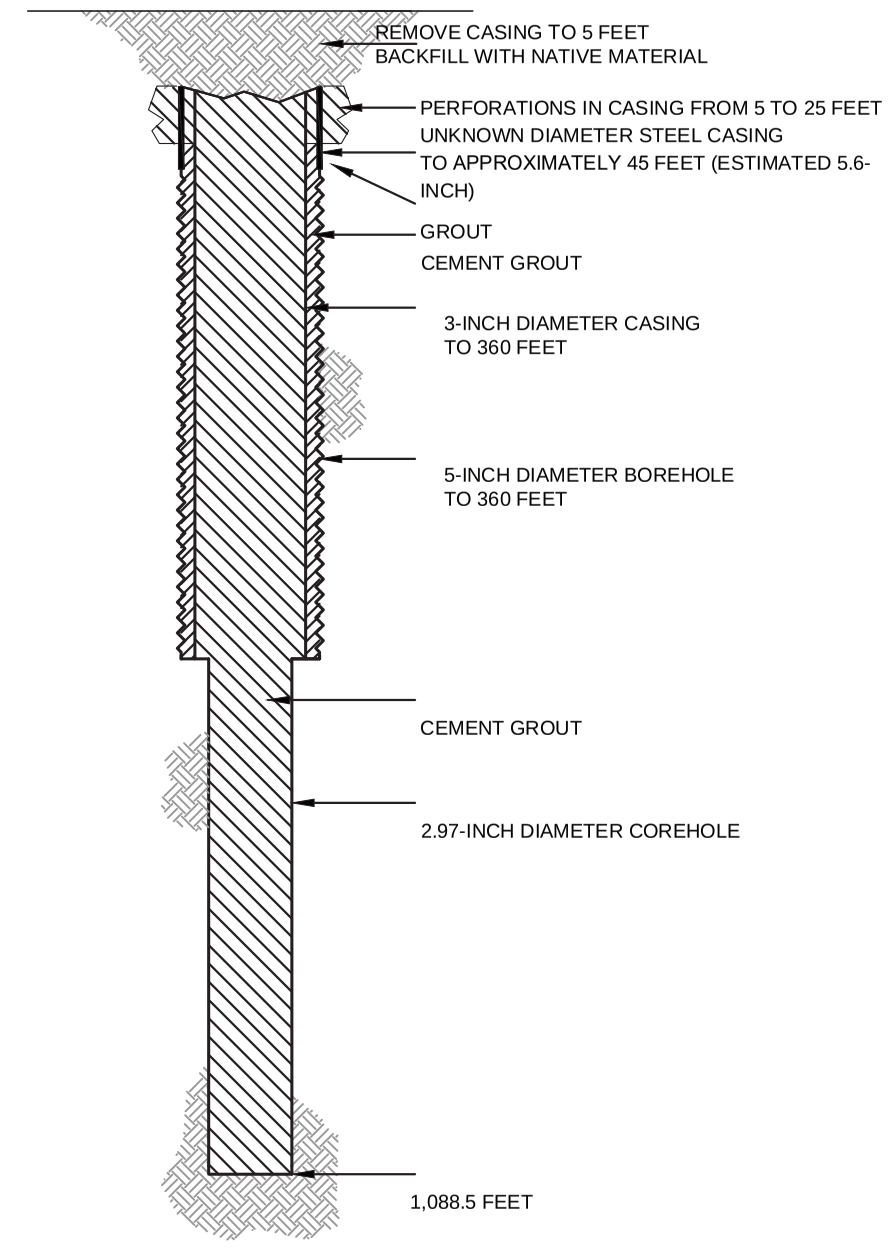

HALEY ALDRICH

FLORENCE COPPER, INC.
FLORENCE, ARIZONA

COREHOLE 351S DIAGRAM

FLORENCE COPPER INC.

NOT TO SCALE
SEPTEMBER 2019

FIGURE 1

MOBINI, GITA Printed: 4/21/2017 12:00 PM Layout: ABANDON (2)
\PROJECTS\CURIS RESOURCES38706-CURIS FEASIBILITY\DRAWINGS\EPA\WELL ABANDON\415S_ABANDON.DWG

OMB No. 2040-0042 Approval Expires 4/30/2022

United States Environmental Protection Agency

WELL REWORK RECORD, PLUGGING AND ABANDONMENT PLAN, OR PLUGGING AND ABANDONMENT AFFIDAVIT

Name and Address, Phone Number and/or Email of Permittee

Florence Copper Project
1575 W Hunt Hwy,
Florence, AZ 85132

Permit or EPA ID Number	API Number	Full Well Name
R9UIC-AZ3-FY11-1		352S

State	County
Arizona	Pinal

Locate well in two directions from nearest lines of quarter section and drilling unit

Latitude 33.05154075

Surface Location

NE **1/4 of** SW **1/4 of Section** 28 **Township** 4S **Range** 9E

Longitude -111.4309629

_____ **ft. from (N/S)** _____ **Line of quarter section**

_____ **ft. from (E/W)** _____ **Line of quarter section.**

Well Class	Timing of Action (pick one)	Type of Action (pick one)
☐ Class I ☐ Class II ☑ Class III ☐ Class V	☑ Notice Prior to Work Date Expected to Commence March 2021 ☐ Report After Work Date Work Ended	☐ Well Rework ☑ Plugging and Abandonment ☐ Conversion to a Non-Injection Well

Provide a narrative description of the work planned to be performed, or that was performed. Use additional pages as necessary. See instructions.

A workover rig capable of performing the required abandonment operations at the required depths will be moved in and set up over the core hole. The core hole will be inspected to determine the depth to which the hole remains open and if any obstructions are present in the core hole; the presence and condition of any existing collar will also be documented. If necessary, the core hole will be cleaned out to a depth of at least 100 feet below the bedrock-LBFU contact to enable placement of cement seals.

If collar is present, an attempt will be made to remove it. If removal of the collar is not feasible, it will be left in the hole and perforated as needed to allow an annular seal to be placed to a depth of at least 25 feet bgs. In areas of agricultural use, the surface casing will be cut at least 5 feet bgs and removed.

If the collar cannot be removed, it will be perforated from at least 20 feet below the bedrock-LBFU contact to at least 20 feet above the contact; from at least 20 feet below the base of the MFGU to at least 20 feet above the top of the MFGU; and from at least 25 feet bgs to 5 feet bgs.

A tremie pipe will be used to place Type V cement in the open core hole from the bottom of the core hole to the top of the core hole. Cement retainers, as described above, will be used to force cement grout into the annulus and behind perforated intervals, as necessary.

If the hole has been obstructed, as much cement as possible will be placed from 100 feet below the LBFU-bedrock contact to the top of the core hole.

The volume of Type V cement will be recorded and will not be less than the estimated volume of material required to fill each interval. All cement grout will consist of Type V cement, or equivalent approved in accordance with the UIC Permit.

Certification

I certify under the penalty of law that I have personally examined and am familiar with the information submitted in this document and all attachments and that, based on my inquiry of those individuals immediately responsible for obtaining the information, I believe that the information is true, accurate, and complete. I am aware that there are significant penalties for submitting false information, including the possibliity of fine and imprisonment. (Ref. 40 CFR § 144.32)

Name and Official Title *(Please type or print)*	Signature	Date Signed
Dan Johnson, VP - General Manager		10/3/2019

INSTRUCTIONS FOR FORM 7520-19

This form replaces forms 7520-12 and 7520-14. Use this form only when work is planned or has occurred that affects the well's construction or operation as an injection well, including work on the casing, tubing or packer (or for shallow Class V wells, the subsurface fluid emplacement network). Use one form per injection well. While reports or other information developed by contractors or service companies may be attached, this form must be signed by a responsible entity as described at 40 CFR 144.32. Note: operators closing Class V wells should use Form 7520-17.

NAME, ADDRESS, PHONE AND/OR EMAIL OF PERMITTEE: Enter the name and street address, city/town, state, and ZIP code of the permittee. Also provide an email address (if available) and/or a phone number.

PERMIT OR EPA ID NUMBER: Enter the well identification number or permit number assigned to the well by the EPA or the permitting authority.

API NUMBER: Enter the number assigned by the local jurisdiction (usually a State Oil and Gas Agency) using the American Petroleum Institute standard numbering system.

FULL WELL NAME: Enter the full name of the well or project.

Enter the **STATE** and **COUNTY** where the well is located. For States that do not have counties, use the name of that State's equivalent jurisdiction at a more local level.

WELL LOCATION: Fill in the complete township, range, and section to the nearest quarter-quarter section. A township is north or south of the baseline, and a range is east or west of the principal meridian (e.g., T12N, R34W). Also include the distance, in feet, from the nearest north or south line and nearest east or west line of the quarter-section. Also, enter the **latitude** and **longitude** of the well in decimal degrees, to five or six places if possible; be sure to include a negative sign for the longitude of a well in the Western Hemisphere and a negative sign for the latitude of a well in the Southern Hemisphere.

Enter the **WELL CLASS,** i.e., the class of injection well as defined in 40 CFR 144.6.

TIMING OF THE ACTION: Check ***Notice prior to work*** if the activity has not yet occurred (i.e., is planned). Check ***Report after work*** if the activity described has already occurred. As appropriate, include the date the activity is expected to start or the date the activity was completed. (Note this may not be available, e.g., for a plugging plan submitted with a permit application.)

TYPE OF ACTION: Check the appropriate box to describe the kind of activity being reported. Check ***Well Rework*** for work that was/will be performed on the well after it has already been in operation as an injection well. Check ***Plugging and Abandonment*** to report on plans for or descriptions of final closure/plugging after use as an injection well. Check ***Conversion to a Non-Injection Well*** if the well is to be converted to something other than an injection well.

Provide a **NARRATIVE DESCRIPTION** of the work planned to be performed, or that was performed. The narrative should include a description of the main procedures planned or that occurred during the work activity. A service company report, daily report, or similar document may be attached if it includes all the requested information and is clear and legible.

For well reworks, include the following information: The reason for the well rework; depths of activity; type of activity; changes to injection well configuration, well casing, or cement behind casing; any plug added to the well and its depth; any newly drilled interval and its depth; method(s) to demonstrate that the well has mechanical integrity (as applicable); and any deviations from the approved rework plan (as applicable).

For a well plugging plan, include the following information: Reason for the well plugging; number of plugs placed, and their depths; materials used as plugs (e.g., cast iron bridge plug, cement, cement retainer); method to set plugs; and wait-on-cement times, if any. Also provide one or more cost estimates from an independent firm in the business of plugging and abandoning wells to plug the well as described in the plan.

For well plugging affidavit, include the following information: Reason for the well plugging; number of plugs placed, and their depths; materials used as plugs (e.g., cast iron bridge plug, cement, cement retainer); method to set plugs; wait-on-cement times, if any; and any deviations from the approved plugging plan (if applicable).

For conversion to a non-injection well, include the following information: Depths of activity; type of activity; changes to injection well configuration, well casing, or cement behind casing; any plug added to the well and its depth; any newly drilled interval and its depth; depths of new perforations; and method(s) to demonstrate that the well has mechanical integrity (as applicable).

For all of the above activities, include a well sketch depicting the work, results of well tests/logging performed, service company tickets, and any other available information demonstrating how the work was/is to be performed. Also, specify whether depths are below ground surface, relative to Kelly bushing, etc.

CERTIFICATION: This form must be signed and dated by either: a responsible corporate officer for a corporation, by a general partner for a partnership, by the proprietor of a sole proprietorship, or by a principal executive or ranking elected official for a public agency.

PAPERWORK REDUCTION ACT NOTICE: The public reporting and recordkeeping burden for this collection of information is estimated to average between 6.0 and 7.9 hours per response, depending on the injection well class. Burden means the total time, effort, or financial resource expended by persons to generate, maintain, retain, or disclose or provide information to or for a Federal Agency. This includes the time needed to review instructions; develop, acquire, install, and utilize technology and systems for the purposes of collecting, validating, and verifying information, processing and maintaining information, and disclosing and providing information; adjust the existing ways to comply with any previously applicable instructions and requirements; train personnel to be able to respond to the collection of information; search data sources; complete and review the collection of information; and, transmit or otherwise disclose the information. An agency may not conduct or sponsor, and a person is not required to respond to, a collection of information unless it displays a currently valid OMB control number. Send comments on the Agency's need for this information, the accuracy of the provided burden estimates, and any suggested methods for minimizing respondent burden, including the use of automated collection techniques to Director, Collection Strategies Division, U.S. Environmental Protection Agency (2822), 1200 Pennsylvania Ave., NW., Washington, D.C. 20460. Include the OMB control number in any correspondence. Do not send the completed forms to this address.

AS-BUILT COREHOLE 352S

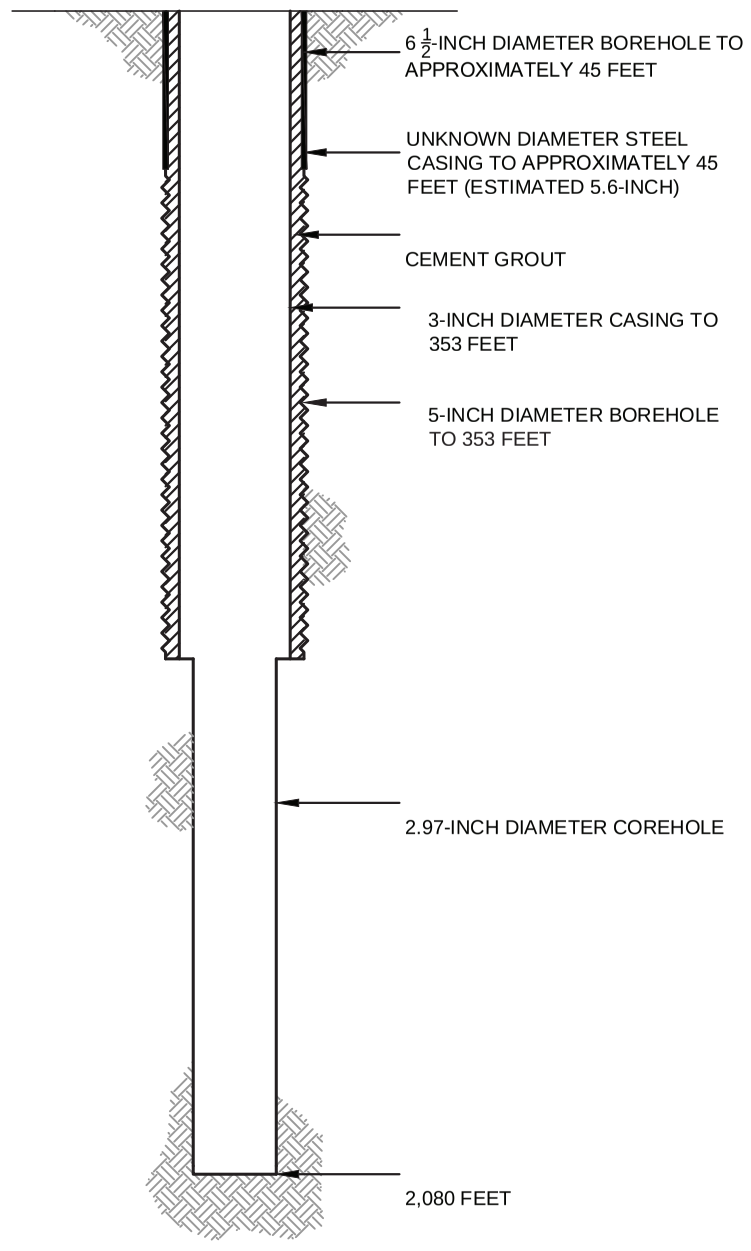

PROPOSED PLUGGING AND ABANDONMENT COREHOLE 352S

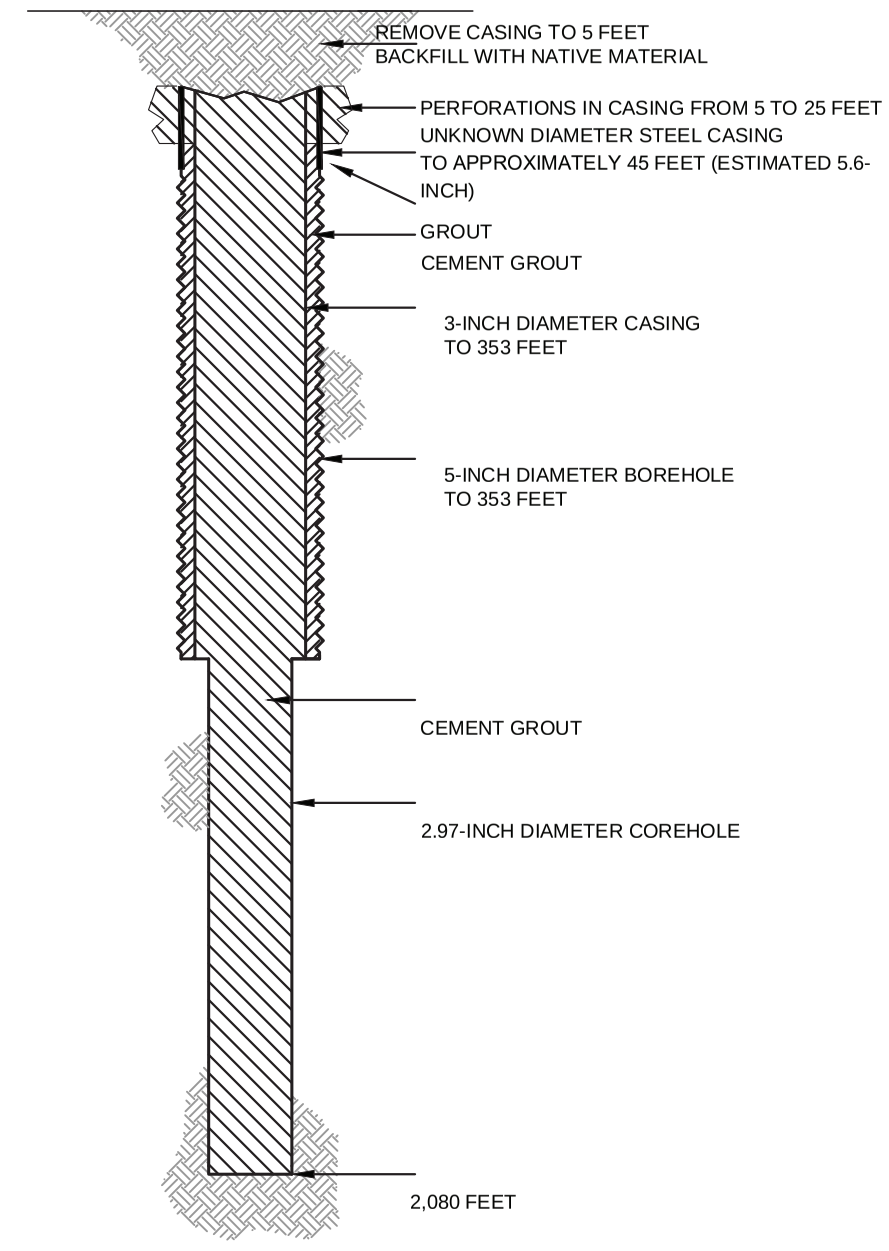

HALEY ALDRICH

FLORENCE COPPER, INC.
FLORENCE, ARIZONA

COREHOLE 352S DIAGRAM

FLORENCE COPPER INC.

NOT TO SCALE
SEPTEMBER 2019

FIGURE 1

MOBINI, GITA Printed: 4/21/2017 12:00 PM Layout: ABANDON (2)
\PROJECTS\CURIS RESOURCES38706-CURIS FEASIBILITY\DRAWINGS\EPA\WELL ABANDON\415S_ABANDON.DWG

OMB No. 2040-0042 Approval Expires 4/30/2022

United States Environmental Protection Agency

WELL REWORK RECORD, PLUGGING AND ABANDONMENT PLAN, OR PLUGGING AND ABANDONMENT AFFIDAVIT

Name and Address, Phone Number and/or Email of Permittee

Florence Copper Project
1575 W Hunt Hwy,
Florence, AZ 85132

Permit or EPA ID Number	API Number	Full Well Name
R9UIC-AZ3-FY11-1		353S

State	County
Arizona	Pinal

Locate well in two directions from nearest lines of quarter section and drilling unit

Latitude 33.05270684

Surface Location

NE **1/4 of** SW **1/4 of Section** 28 **Township** 4S **Range** 9E

Longitude -111.4317724

_____ **ft. from (N/S)** _____ **Line of quarter section**

_____ **ft. from (E/W)** _____ **Line of quarter section.**

Well Class	Timing of Action (pick one)	Type of Action (pick one)
☐ Class I ☐ Class II ☑ Class III ☐ Class V	☑ Notice Prior to Work Date Expected to Commence March 2021 ☐ Report After Work Date Work Ended	☐ Well Rework ☑ Plugging and Abandonment ☐ Conversion to a Non-Injection Well

Provide a narrative description of the work planned to be performed, or that was performed. Use additional pages as necessary. See instructions.

A workover rig capable of performing the required abandonment operations at the required depths will be moved in and set up over the core hole. The core hole will be inspected to determine the depth to which the hole remains open and if any obstructions are present in the core hole; the presence and condition of any existing collar will also be documented. If necessary, the core hole will be cleaned out to a depth of at least 100 feet below the bedrock-LBFU contact to enable placement of cement seals.

If collar is present, an attempt will be made to remove it. If removal of the collar is not feasible, it will be left in the hole and perforated as needed to allow an annular seal to be placed to a depth of at least 25 feet bgs. In areas of agricultural use, the surface casing will be cut at least 5 feet bgs and removed.

If the collar cannot be removed, it will be perforated from at least 20 feet below the bedrock-LBFU contact to at least 20 feet above the contact; from at least 20 feet below the base of the MFGU to at least 20 feet above the top of the MFGU; and from at least 25 feet bgs to 5 feet bgs.

A tremie pipe will be used to place Type V cement in the open core hole from the bottom of the core hole to the top of the core hole. Cement retainers, as described above, will be used to force cement grout into the annulus and behind perforated intervals, as necessary.

If the hole has been obstructed, as much cement as possible will be placed from 100 feet below the LBFU-bedrock contact to the top of the core hole.

The volume of Type V cement will be recorded and will not be less than the estimated volume of material required to fill each interval. All cement grout will consist of Type V cement, or equivalent approved in accordance with the UIC Permit.

Certification

I certify under the penalty of law that I have personally examined and am familiar with the information submitted in this document and all attachments and that, based on my inquiry of those individuals immediately responsible for obtaining the information, I believe that the information is true, accurate, and complete. I am aware that there are significant penalties for submitting false information, including the possibliity of fine and imprisonment. (Ref. 40 CFR § 144.32)

Name and Official Title *(Please type or print)*	Signature	Date Signed
Dan Johnson, VP - General Manager		10/3/2019

INSTRUCTIONS FOR FORM 7520-19

This form replaces forms 7520-12 and 7520-14. Use this form only when work is planned or has occurred that affects the well's construction or operation as an injection well, including work on the casing, tubing or packer (or for shallow Class V wells, the subsurface fluid emplacement network). Use one form per injection well. While reports or other information developed by contractors or service companies may be attached, this form must be signed by a responsible entity as described at 40 CFR 144.32. Note: operators closing Class V wells should use Form 7520-17.

NAME, ADDRESS, PHONE AND/OR EMAIL OF PERMITTEE: Enter the name and street address, city/town, state, and ZIP code of the permittee. Also provide an email address (if available) and/or a phone number.

PERMIT OR EPA ID NUMBER: Enter the well identification number or permit number assigned to the well by the EPA or the permitting authority.

API NUMBER: Enter the number assigned by the local jurisdiction (usually a State Oil and Gas Agency) using the American Petroleum Institute standard numbering system.

FULL WELL NAME: Enter the full name of the well or project.

Enter the **STATE** and **COUNTY** where the well is located. For States that do not have counties, use the name of that State's equivalent jurisdiction at a more local level.

WELL LOCATION: Fill in the complete township, range, and section to the nearest quarter-quarter section. A township is north or south of the baseline, and a range is east or west of the principal meridian (e.g., T12N, R34W). Also include the distance, in feet, from the nearest north or south line and nearest east or west line of the quarter-section. Also, enter the **latitude** and **longitude** of the well in decimal degrees, to five or six places if possible; be sure to include a negative sign for the longitude of a well in the Western Hemisphere and a negative sign for the latitude of a well in the Southern Hemisphere.

Enter the **WELL CLASS,** i.e., the class of injection well as defined in 40 CFR 144.6.

TIMING OF THE ACTION: Check ***Notice prior to work*** if the activity has not yet occurred (i.e., is planned). Check ***Report after work*** if the activity described has already occurred. As appropriate, include the date the activity is expected to start or the date the activity was completed. (Note this may not be available, e.g., for a plugging plan submitted with a permit application.)

TYPE OF ACTION: Check the appropriate box to describe the kind of activity being reported. Check ***Well Rework*** for work that was/will be performed on the well after it has already been in operation as an injection well. Check ***Plugging and Abandonment*** to report on plans for or descriptions of final closure/plugging after use as an injection well. Check ***Conversion to a Non-Injection Well*** if the well is to be converted to something other than an injection well.

Provide a **NARRATIVE DESCRIPTION** of the work planned to be performed, or that was performed. The narrative should include a description of the main procedures planned or that occurred during the work activity. A service company report, daily report, or similar document may be attached if it includes all the requested information and is clear and legible.

For well reworks, include the following information: The reason for the well rework; depths of activity; type of activity; changes to injection well configuration, well casing, or cement behind casing; any plug added to the well and its depth; any newly drilled interval and its depth; method(s) to demonstrate that the well has mechanical integrity (as applicable); and any deviations from the approved rework plan (as applicable).

For a well plugging plan, include the following information: Reason for the well plugging; number of plugs placed, and their depths; materials used as plugs (e.g., cast iron bridge plug, cement, cement retainer); method to set plugs; and wait-on-cement times, if any. Also provide one or more cost estimates from an independent firm in the business of plugging and abandoning wells to plug the well as described in the plan.

For well plugging affidavit, include the following information: Reason for the well plugging; number of plugs placed, and their depths; materials used as plugs (e.g., cast iron bridge plug, cement, cement retainer); method to set plugs; wait-on-cement times, if any; and any deviations from the approved plugging plan (if applicable).

For conversion to a non-injection well, include the following information: Depths of activity; type of activity; changes to injection well configuration, well casing, or cement behind casing; any plug added to the well and its depth; any newly drilled interval and its depth; depths of new perforations; and method(s) to demonstrate that the well has mechanical integrity (as applicable).

For all of the above activities, include a well sketch depicting the work, results of well tests/logging performed, service company tickets, and any other available information demonstrating how the work was/is to be performed. Also, specify whether depths are below ground surface, relative to Kelly bushing, etc.

CERTIFICATION: This form must be signed and dated by either: a responsible corporate officer for a corporation, by a general partner for a partnership, by the proprietor of a sole proprietorship, or by a principal executive or ranking elected official for a public agency.

PAPERWORK REDUCTION ACT NOTICE: The public reporting and recordkeeping burden for this collection of information is estimated to average between 6.0 and 7.9 hours per response, depending on the injection well class. Burden means the total time, effort, or financial resource expended by persons to generate, maintain, retain, or disclose or provide information to or for a Federal Agency. This includes the time needed to review instructions; develop, acquire, install, and utilize technology and systems for the purposes of collecting, validating, and verifying information, processing and maintaining information, and disclosing and providing information; adjust the existing ways to comply with any previously applicable instructions and requirements; train personnel to be able to respond to the collection of information; search data sources; complete and review the collection of information; and, transmit or otherwise disclose the information. An agency may not conduct or sponsor, and a person is not required to respond to, a collection of information unless it displays a currently valid OMB control number. Send comments on the Agency's need for this information, the accuracy of the provided burden estimates, and any suggested methods for minimizing respondent burden, including the use of automated collection techniques to Director, Collection Strategies Division, U.S. Environmental Protection Agency (2822), 1200 Pennsylvania Ave., NW., Washington, D.C. 20460. Include the OMB control number in any correspondence. Do not send the completed forms to this address.

AS-BUILT COREHOLE 353S

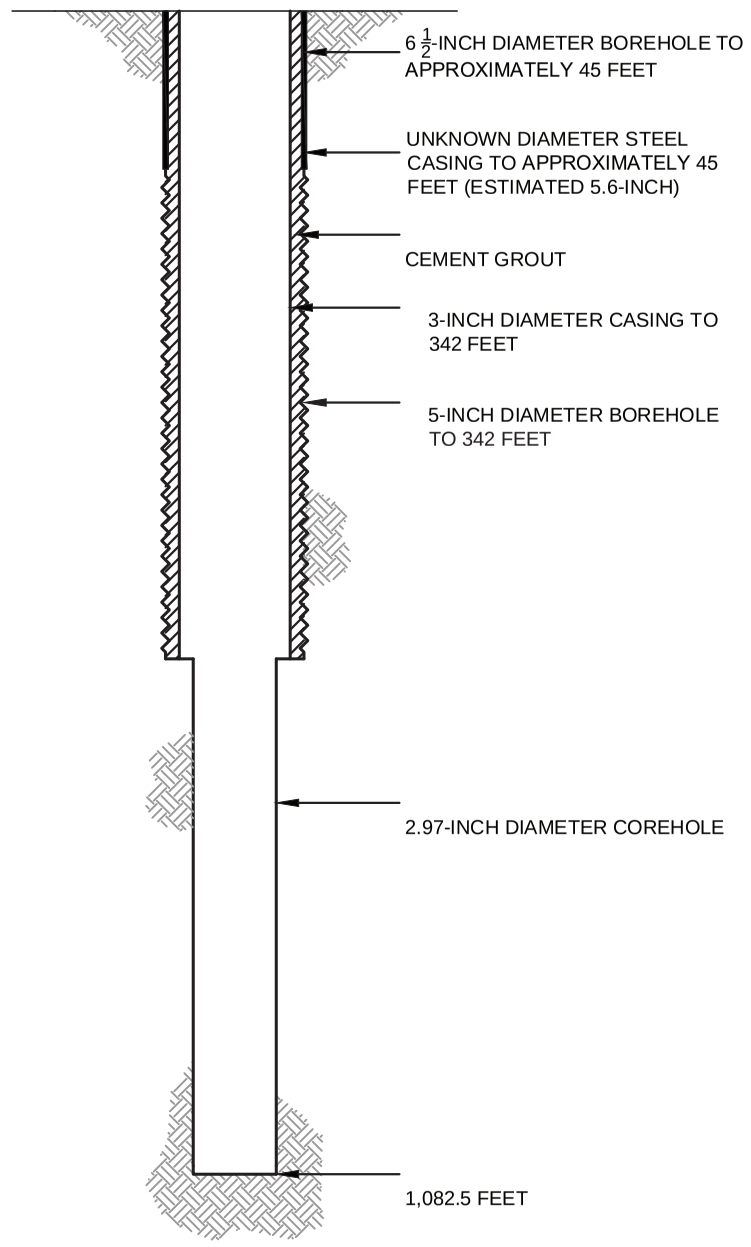

PROPOSED PLUGGING AND ABANDONMENT COREHOLE 353S

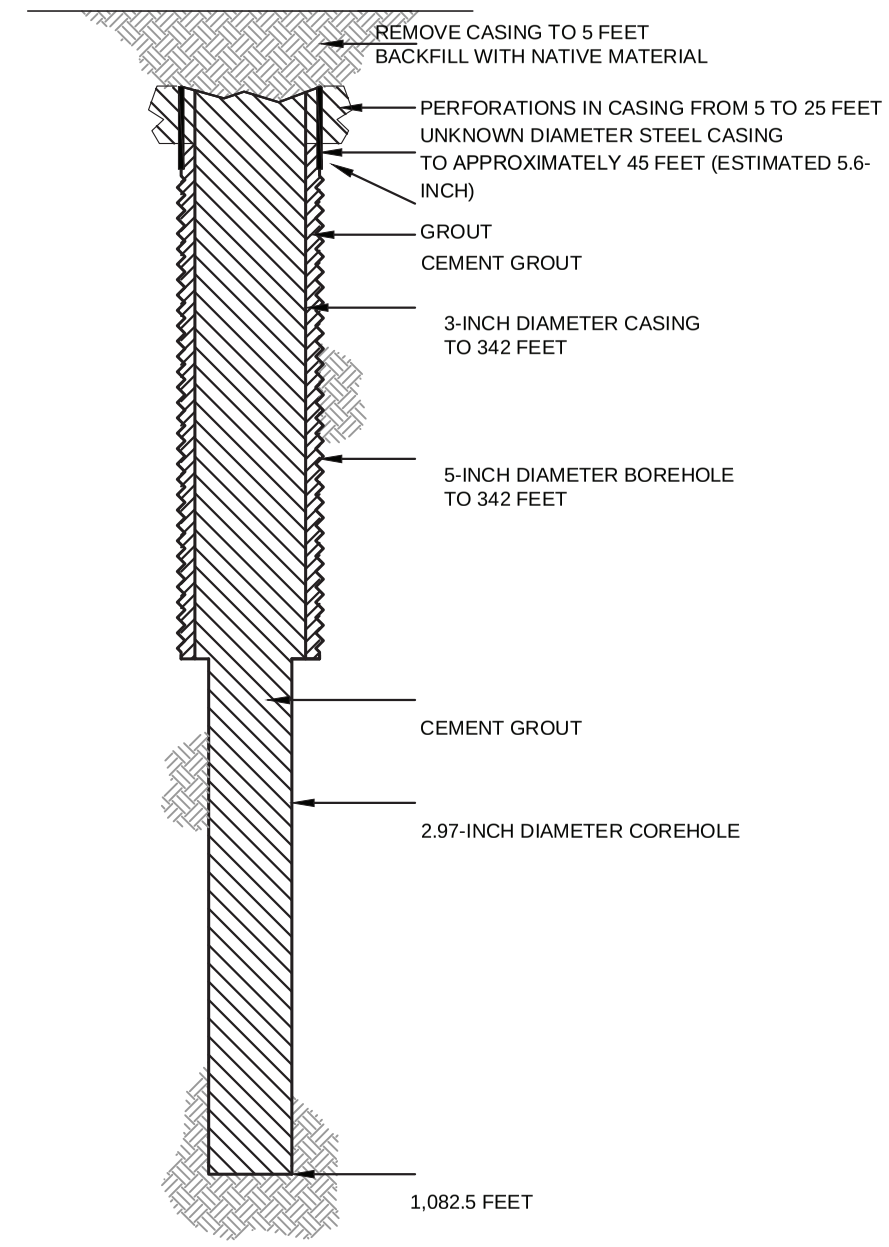

HALEY ALDRICH

FLORENCE COPPER, INC.
FLORENCE, ARIZONA

COREHOLE 353S DIAGRAM

FLORENCE COPPER INC.

NOT TO SCALE
SEPTEMBER 2019

FIGURE 1

MOBINI, GITA Printed: 4/21/2017 12:00 PM Layout: ABANDON (2)
\PROJECTS\CURIS RESOURCES38706-CURIS FEASIBILITY\DRAWINGS\EPA\WELL ABANDON\415S_ABANDON.DWG

OMB No. 2040-0042 Approval Expires 4/30/2022

United States Environmental Protection Agency

WELL REWORK RECORD, PLUGGING AND ABANDONMENT PLAN, OR PLUGGING AND ABANDONMENT AFFIDAVIT

Name and Address, Phone Number and/or Email of Permittee

Florence Copper Project
1575 W Hunt Hwy,
Florence, AZ 85132

Permit or EPA ID Number	API Number	Full Well Name
R9UIC-AZ3-FY11-1		354S

State	County
Arizona	Pinal

Locate well in two directions from nearest lines of quarter section and drilling unit

Latitude 33.05273722

Longitude -111.4325881

Surface Location

NE **1/4 of** SW **1/4 of Section** 28 **Township** 4S **Range** 9E

_____ **ft. from (N/S)** _____ **Line of quarter section**

_____ **ft. from (E/W)** _____ **Line of quarter section.**

Well Class	Timing of Action (pick one)	Type of Action (pick one)
☐ Class I ☐ Class II ☑ Class III ☐ Class V	☑ Notice Prior to Work Date Expected to Commence March 2021 ☐ Report After Work Date Work Ended	☐ Well Rework ☑ Plugging and Abandonment ☐ Conversion to a Non-Injection Well

Provide a narrative description of the work planned to be performed, or that was performed. Use additional pages as necessary. See instructions.

A workover rig capable of performing the required abandonment operations at the required depths will be moved in and set up over the core hole. The core hole will be inspected to determine the depth to which the hole remains open and if any obstructions are present in the core hole; the presence and condition of any existing collar will also be documented. If necessary, the core hole will be cleaned out to a depth of at least 100 feet below the bedrock-LBFU contact to enable placement of cement seals.

If collar is present, an attempt will be made to remove it. If removal of the collar is not feasible, it will be left in the hole and perforated as needed to allow an annular seal to be placed to a depth of at least 25 feet bgs. In areas of agricultural use, the surface casing will be cut at least 5 feet bgs and removed.

If the collar cannot be removed, it will be perforated from at least 20 feet below the bedrock-LBFU contact to at least 20 feet above the contact; from at least 20 feet below the base of the MFGU to at least 20 feet above the top of the MFGU; and from at least 25 feet bgs to 5 feet bgs.

A tremie pipe will be used to place Type V cement in the open core hole from the bottom of the core hole to the top of the core hole. Cement retainers, as described above, will be used to force cement grout into the annulus and behind perforated intervals, as necessary.

If the hole has been obstructed, as much cement as possible will be placed from 100 feet below the LBFU-bedrock contact to the top of the core hole.

The volume of Type V cement will be recorded and will not be less than the estimated volume of material required to fill each interval. All cement grout will consist of Type V cement, or equivalent approved in accordance with the UIC Permit.

Certification

I certify under the penalty of law that I have personally examined and am familiar with the information submitted in this document and all attachments and that, based on my inquiry of those individuals immediately responsible for obtaining the information, I believe that the information is true, accurate, and complete. I am aware that there are significant penalties for submitting false information, including the possibliity of fine and imprisonment. (Ref. 40 CFR § 144.32)

Name and Official Title *(Please type or print)*	Signature	Date Signed
Dan Johnson, VP - General Manager		10/3/2019

INSTRUCTIONS FOR FORM 7520-19

This form replaces forms 7520-12 and 7520-14. Use this form only when work is planned or has occurred that affects the well's construction or operation as an injection well, including work on the casing, tubing or packer (or for shallow Class V wells, the subsurface fluid emplacement network). Use one form per injection well. While reports or other information developed by contractors or service companies may be attached, this form must be signed by a responsible entity as described at 40 CFR 144.32. Note: operators closing Class V wells should use Form 7520-17.

NAME, ADDRESS, PHONE AND/OR EMAIL OF PERMITTEE: Enter the name and street address, city/town, state, and ZIP code of the permittee. Also provide an email address (if available) and/or a phone number.

PERMIT OR EPA ID NUMBER: Enter the well identification number or permit number assigned to the well by the EPA or the permitting authority.

API NUMBER: Enter the number assigned by the local jurisdiction (usually a State Oil and Gas Agency) using the American Petroleum Institute standard numbering system.

FULL WELL NAME: Enter the full name of the well or project.

Enter the **STATE** and **COUNTY** where the well is located. For States that do not have counties, use the name of that State's equivalent jurisdiction at a more local level.

WELL LOCATION: Fill in the complete township, range, and section to the nearest quarter-quarter section. A township is north or south of the baseline, and a range is east or west of the principal meridian (e.g., T12N, R34W). Also include the distance, in feet, from the nearest north or south line and nearest east or west line of the quarter-section. Also, enter the **latitude** and **longitude** of the well in decimal degrees, to five or six places if possible; be sure to include a negative sign for the longitude of a well in the Western Hemisphere and a negative sign for the latitude of a well in the Southern Hemisphere.

Enter the **WELL CLASS,** i.e., the class of injection well as defined in 40 CFR 144.6.

TIMING OF THE ACTION: Check ***Notice prior to work*** if the activity has not yet occurred (i.e., is planned). Check ***Report after work*** if the activity described has already occurred. As appropriate, include the date the activity is expected to start or the date the activity was completed. (Note this may not be available, e.g., for a plugging plan submitted with a permit application.)

TYPE OF ACTION: Check the appropriate box to describe the kind of activity being reported. Check ***Well Rework*** for work that was/will be performed on the well after it has already been in operation as an injection well. Check ***Plugging and Abandonment*** to report on plans for or descriptions of final closure/plugging after use as an injection well. Check ***Conversion to a Non-Injection Well*** if the well is to be converted to something other than an injection well.

Provide a **NARRATIVE DESCRIPTION** of the work planned to be performed, or that was performed. The narrative should include a description of the main procedures planned or that occurred during the work activity. A service company report, daily report, or similar document may be attached if it includes all the requested information and is clear and legible.

For well reworks, include the following information: The reason for the well rework; depths of activity; type of activity; changes to injection well configuration, well casing, or cement behind casing; any plug added to the well and its depth; any newly drilled interval and its depth; method(s) to demonstrate that the well has mechanical integrity (as applicable); and any deviations from the approved rework plan (as applicable).

For a well plugging plan, include the following information: Reason for the well plugging; number of plugs placed, and their depths; materials used as plugs (e.g., cast iron bridge plug, cement, cement retainer); method to set plugs; and wait-on-cement times, if any. Also provide one or more cost estimates from an independent firm in the business of plugging and abandoning wells to plug the well as described in the plan.

For well plugging affidavit, include the following information: Reason for the well plugging; number of plugs placed, and their depths; materials used as plugs (e.g., cast iron bridge plug, cement, cement retainer); method to set plugs; wait-on-cement times, if any; and any deviations from the approved plugging plan (if applicable).

For conversion to a non-injection well, include the following information: Depths of activity; type of activity; changes to injection well configuration, well casing, or cement behind casing; any plug added to the well and its depth; any newly drilled interval and its depth; depths of new perforations; and method(s) to demonstrate that the well has mechanical integrity (as applicable).

For all of the above activities, include a well sketch depicting the work, results of well tests/logging performed, service company tickets, and any other available information demonstrating how the work was/is to be performed. Also, specify whether depths are below ground surface, relative to Kelly bushing, etc.

CERTIFICATION: This form must be signed and dated by either: a responsible corporate officer for a corporation, by a general partner for a partnership, by the proprietor of a sole proprietorship, or by a principal executive or ranking elected official for a public agency.

PAPERWORK REDUCTION ACT NOTICE: The public reporting and recordkeeping burden for this collection of information is estimated to average between 6.0 and 7.9 hours per response, depending on the injection well class. Burden means the total time, effort, or financial resource expended by persons to generate, maintain, retain, or disclose or provide information to or for a Federal Agency. This includes the time needed to review instructions; develop, acquire, install, and utilize technology and systems for the purposes of collecting, validating, and verifying information, processing and maintaining information, and disclosing and providing information; adjust the existing ways to comply with any previously applicable instructions and requirements; train personnel to be able to respond to the collection of information; search data sources; complete and review the collection of information; and, transmit or otherwise disclose the information. An agency may not conduct or sponsor, and a person is not required to respond to, a collection of information unless it displays a currently valid OMB control number. Send comments on the Agency's need for this information, the accuracy of the provided burden estimates, and any suggested methods for minimizing respondent burden, including the use of automated collection techniques to Director, Collection Strategies Division, U.S. Environmental Protection Agency (2822), 1200 Pennsylvania Ave., NW., Washington, D.C. 20460. Include the OMB control number in any correspondence. Do not send the completed forms to this address.

AS-BUILT COREHOLE 354S

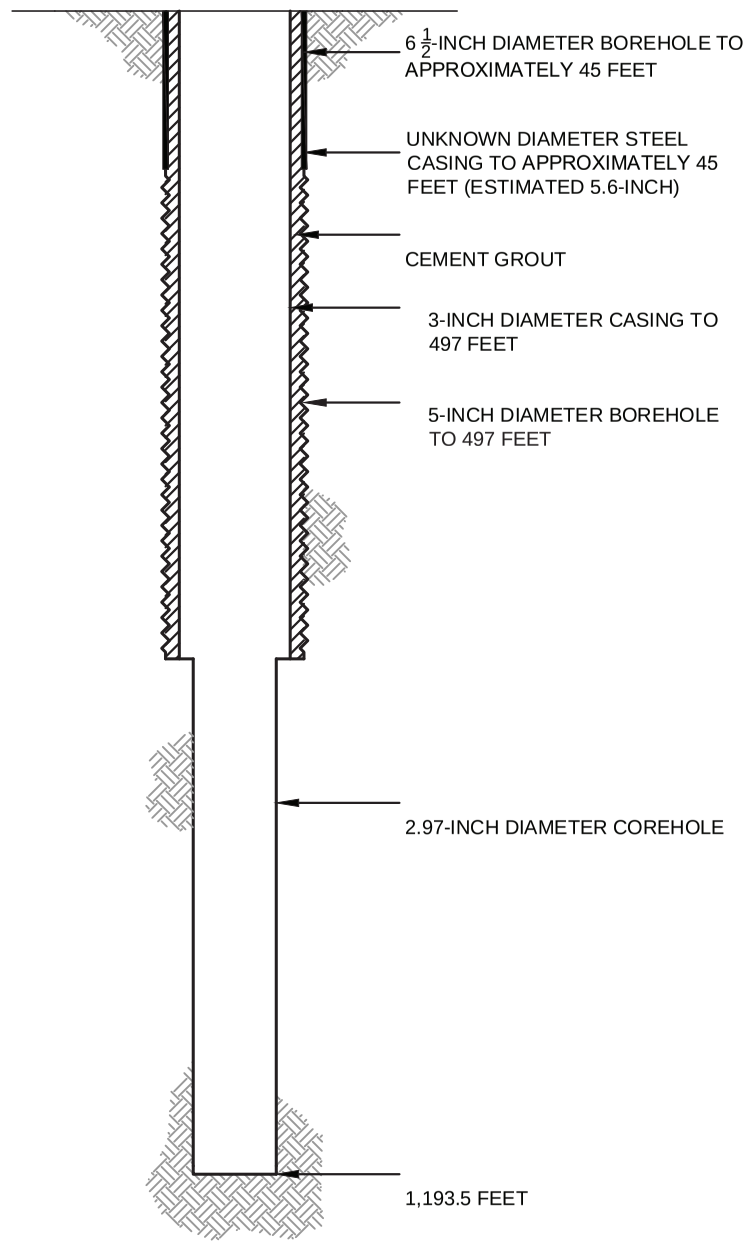

PROPOSED PLUGGING AND ABANDONMENT COREHOLE 354S

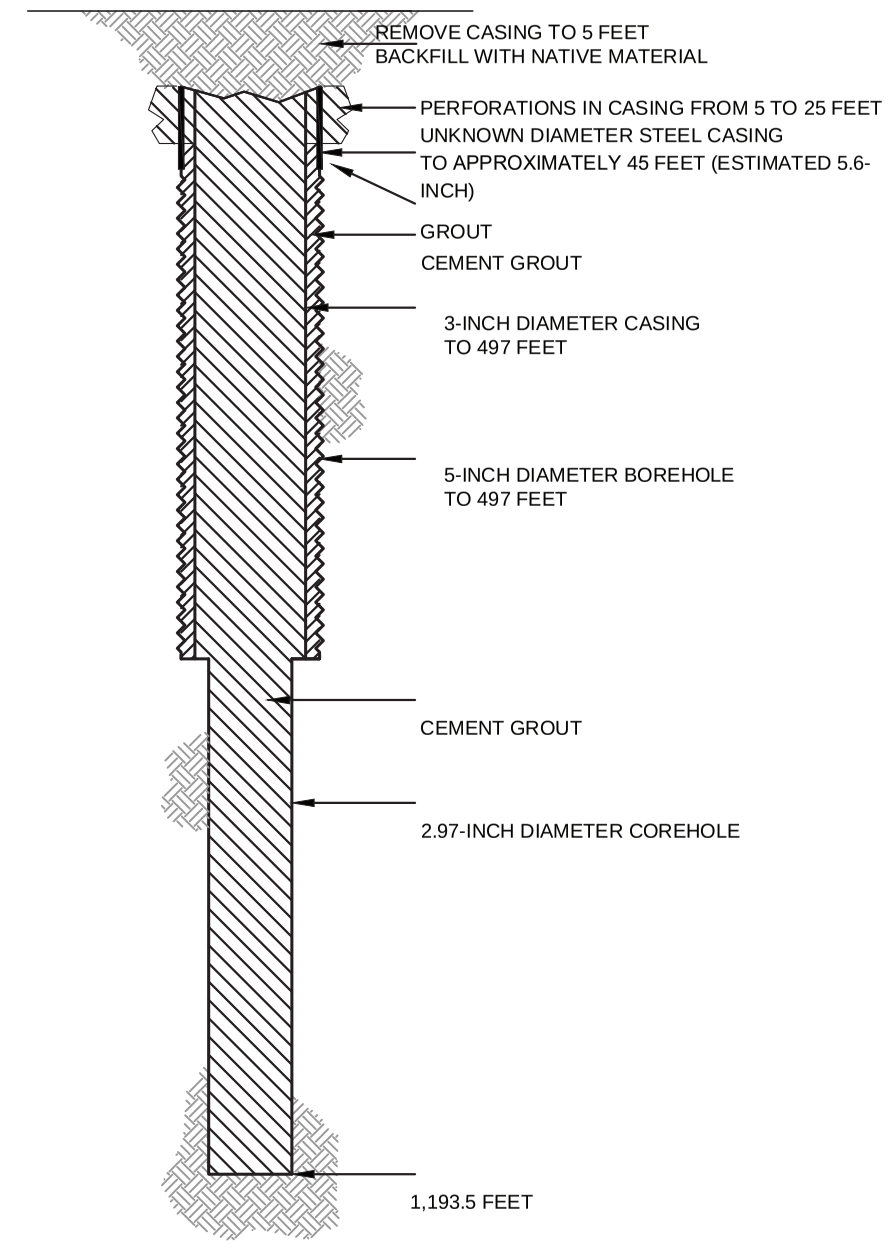

HALEY ALDRICH

FLORENCE COPPER, INC.
FLORENCE, ARIZONA

COREHOLE 354S DIAGRAM

FLORENCE COPPER INC.

NOT TO SCALE
SEPTEMBER 2019

FIGURE 1

MOBINI, GITA Printed: 4/21/2017 12:00 PM Layout: ABANDON (2)
\PROJECTS\CURIS RESOURCES38706-CURIS FEASIBILITY\DRAWINGS\EPA\WELL ABANDON\415S_ABANDON.DWG

OMB No. 2040-0042 Approval Expires 4/30/2022

United States Environmental Protection Agency

WELL REWORK RECORD, PLUGGING AND ABANDONMENT PLAN, OR PLUGGING AND ABANDONMENT AFFIDAVIT

Name and Address, Phone Number and/or Email of Permittee

Florence Copper Project
1575 W Hunt Hwy,
Florence, AZ 85132

Permit or EPA ID Number	API Number	Full Well Name
R9UIC-AZ3-FY11-1		355S

State	County
Arizona	Pinal

Locate well in two directions from nearest lines of quarter section and drilling unit

Latitude 33.05214374

Surface Location

NE **1/4 of** SW **1/4 of Section** 28 **Township** 4S **Range** 9E

Longitude -111.4329993

_____ **ft. from (N/S)** _____ **Line of quarter section**

_____ **ft. from (E/W)** _____ **Line of quarter section.**

Well Class	Timing of Action (pick one)	Type of Action (pick one)
☐ Class I ☐ Class II ☑ Class III ☐ Class V	☑ Notice Prior to Work Date Expected to Commence March 2021 ☐ Report After Work Date Work Ended	☐ Well Rework ☑ Plugging and Abandonment ☐ Conversion to a Non-Injection Well

Provide a narrative description of the work planned to be performed, or that was performed. Use additional pages as necessary. See instructions.

A workover rig capable of performing the required abandonment operations at the required depths will be moved in and set up over the core hole. The core hole will be inspected to determine the depth to which the hole remains open and if any obstructions are present in the core hole; the presence and condition of any existing collar will also be documented. If necessary, the core hole will be cleaned out to a depth of at least 100 feet below the bedrock-LBFU contact to enable placement of cement seals.

If collar is present, an attempt will be made to remove it. If removal of the collar is not feasible, it will be left in the hole and perforated as needed to allow an annular seal to be placed to a depth of at least 25 feet bgs. In areas of agricultural use, the surface casing will be cut at least 5 feet bgs and removed.

If the collar cannot be removed, it will be perforated from at least 20 feet below the bedrock-LBFU contact to at least 20 feet above the contact; from at least 20 feet below the base of the MFGU to at least 20 feet above the top of the MFGU; and from at least 25 feet bgs to 5 feet bgs.

A tremie pipe will be used to place Type V cement in the open core hole from the bottom of the core hole to the top of the core hole. Cement retainers, as described above, will be used to force cement grout into the annulus and behind perforated intervals, as necessary.

If the hole has been obstructed, as much cement as possible will be placed from 100 feet below the LBFU-bedrock contact to the top of the core hole.

The volume of Type V cement will be recorded and will not be less than the estimated volume of material required to fill each interval. All cement grout will consist of Type V cement, or equivalent approved in accordance with the UIC Permit.

Certification

I certify under the penalty of law that I have personally examined and am familiar with the information submitted in this document and all attachments and that, based on my inquiry of those individuals immediately responsible for obtaining the information, I believe that the information is true, accurate, and complete. I am aware that there are significant penalties for submitting false information, including the possibliity of fine and imprisonment. (Ref. 40 CFR § 144.32)

Name and Official Title *(Please type or print)*	Signature	Date Signed
Dan Johnson, VP - General Manager		10/3/2019

INSTRUCTIONS FOR FORM 7520-19

This form replaces forms 7520-12 and 7520-14. Use this form only when work is planned or has occurred that affects the well's construction or operation as an injection well, including work on the casing, tubing or packer (or for shallow Class V wells, the subsurface fluid emplacement network). Use one form per injection well. While reports or other information developed by contractors or service companies may be attached, this form must be signed by a responsible entity as described at 40 CFR 144.32. Note: operators closing Class V wells should use Form 7520-17.

NAME, ADDRESS, PHONE AND/OR EMAIL OF PERMITTEE: Enter the name and street address, city/town, state, and ZIP code of the permittee. Also provide an email address (if available) and/or a phone number.

PERMIT OR EPA ID NUMBER: Enter the well identification number or permit number assigned to the well by the EPA or the permitting authority.

API NUMBER: Enter the number assigned by the local jurisdiction (usually a State Oil and Gas Agency) using the American Petroleum Institute standard numbering system.

FULL WELL NAME: Enter the full name of the well or project.

Enter the **STATE** and **COUNTY** where the well is located. For States that do not have counties, use the name of that State's equivalent jurisdiction at a more local level.

WELL LOCATION: Fill in the complete township, range, and section to the nearest quarter-quarter section. A township is north or south of the baseline, and a range is east or west of the principal meridian (e.g., T12N, R34W). Also include the distance, in feet, from the nearest north or south line and nearest east or west line of the quarter-section. Also, enter the **latitude** and **longitude** of the well in decimal degrees, to five or six places if possible; be sure to include a negative sign for the longitude of a well in the Western Hemisphere and a negative sign for the latitude of a well in the Southern Hemisphere.

Enter the **WELL CLASS,** i.e., the class of injection well as defined in 40 CFR 144.6.

TIMING OF THE ACTION: Check ***Notice prior to work*** if the activity has not yet occurred (i.e., is planned). Check ***Report after work*** if the activity described has already occurred. As appropriate, include the date the activity is expected to start or the date the activity was completed. (Note this may not be available, e.g., for a plugging plan submitted with a permit application.)

TYPE OF ACTION: Check the appropriate box to describe the kind of activity being reported. Check ***Well Rework*** for work that was/will be performed on the well after it has already been in operation as an injection well. Check ***Plugging and Abandonment*** to report on plans for or descriptions of final closure/plugging after use as an injection well. Check ***Conversion to a Non-Injection Well*** if the well is to be converted to something other than an injection well.

Provide a **NARRATIVE DESCRIPTION** of the work planned to be performed, or that was performed. The narrative should include a description of the main procedures planned or that occurred during the work activity. A service company report, daily report, or similar document may be attached if it includes all the requested information and is clear and legible.

For well reworks, include the following information: The reason for the well rework; depths of activity; type of activity; changes to injection well configuration, well casing, or cement behind casing; any plug added to the well and its depth; any newly drilled interval and its depth; method(s) to demonstrate that the well has mechanical integrity (as applicable); and any deviations from the approved rework plan (as applicable).

For a well plugging plan, include the following information: Reason for the well plugging; number of plugs placed, and their depths; materials used as plugs (e.g., cast iron bridge plug, cement, cement retainer); method to set plugs; and wait-on-cement times, if any. Also provide one or more cost estimates from an independent firm in the business of plugging and abandoning wells to plug the well as described in the plan.

For well plugging affidavit, include the following information: Reason for the well plugging; number of plugs placed, and their depths; materials used as plugs (e.g., cast iron bridge plug, cement, cement retainer); method to set plugs; wait-on-cement times, if any; and any deviations from the approved plugging plan (if applicable).

For conversion to a non-injection well, include the following information: Depths of activity; type of activity; changes to injection well configuration, well casing, or cement behind casing; any plug added to the well and its depth; any newly drilled interval and its depth; depths of new perforations; and method(s) to demonstrate that the well has mechanical integrity (as applicable).

For all of the above activities, include a well sketch depicting the work, results of well tests/logging performed, service company tickets, and any other available information demonstrating how the work was/is to be performed. Also, specify whether depths are below ground surface, relative to Kelly bushing, etc.

CERTIFICATION: This form must be signed and dated by either: a responsible corporate officer for a corporation, by a general partner for a partnership, by the proprietor of a sole proprietorship, or by a principal executive or ranking elected official for a public agency.

PAPERWORK REDUCTION ACT NOTICE: The public reporting and recordkeeping burden for this collection of information is estimated to average between 6.0 and 7.9 hours per response, depending on the injection well class. Burden means the total time, effort, or financial resource expended by persons to generate, maintain, retain, or disclose or provide information to or for a Federal Agency. This includes the time needed to review instructions; develop, acquire, install, and utilize technology and systems for the purposes of collecting, validating, and verifying information, processing and maintaining information, and disclosing and providing information; adjust the existing ways to comply with any previously applicable instructions and requirements; train personnel to be able to respond to the collection of information; search data sources; complete and review the collection of information; and, transmit or otherwise disclose the information. An agency may not conduct or sponsor, and a person is not required to respond to, a collection of information unless it displays a currently valid OMB control number. Send comments on the Agency's need for this information, the accuracy of the provided burden estimates, and any suggested methods for minimizing respondent burden, including the use of automated collection techniques to Director, Collection Strategies Division, U.S. Environmental Protection Agency (2822), 1200 Pennsylvania Ave., NW., Washington, D.C. 20460. Include the OMB control number in any correspondence. Do not send the completed forms to this address.

AS-BUILT COREHOLE 355S

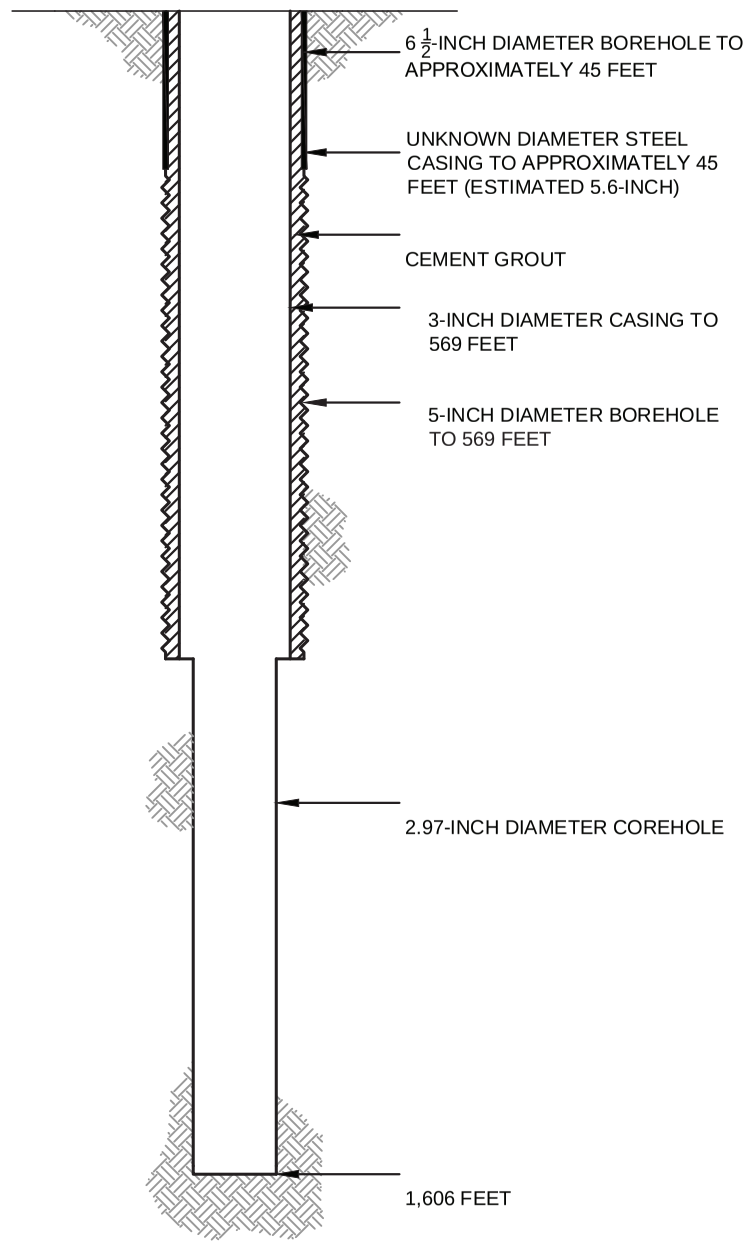

PROPOSED PLUGGING AND ABANDONMENT COREHOLE 355S

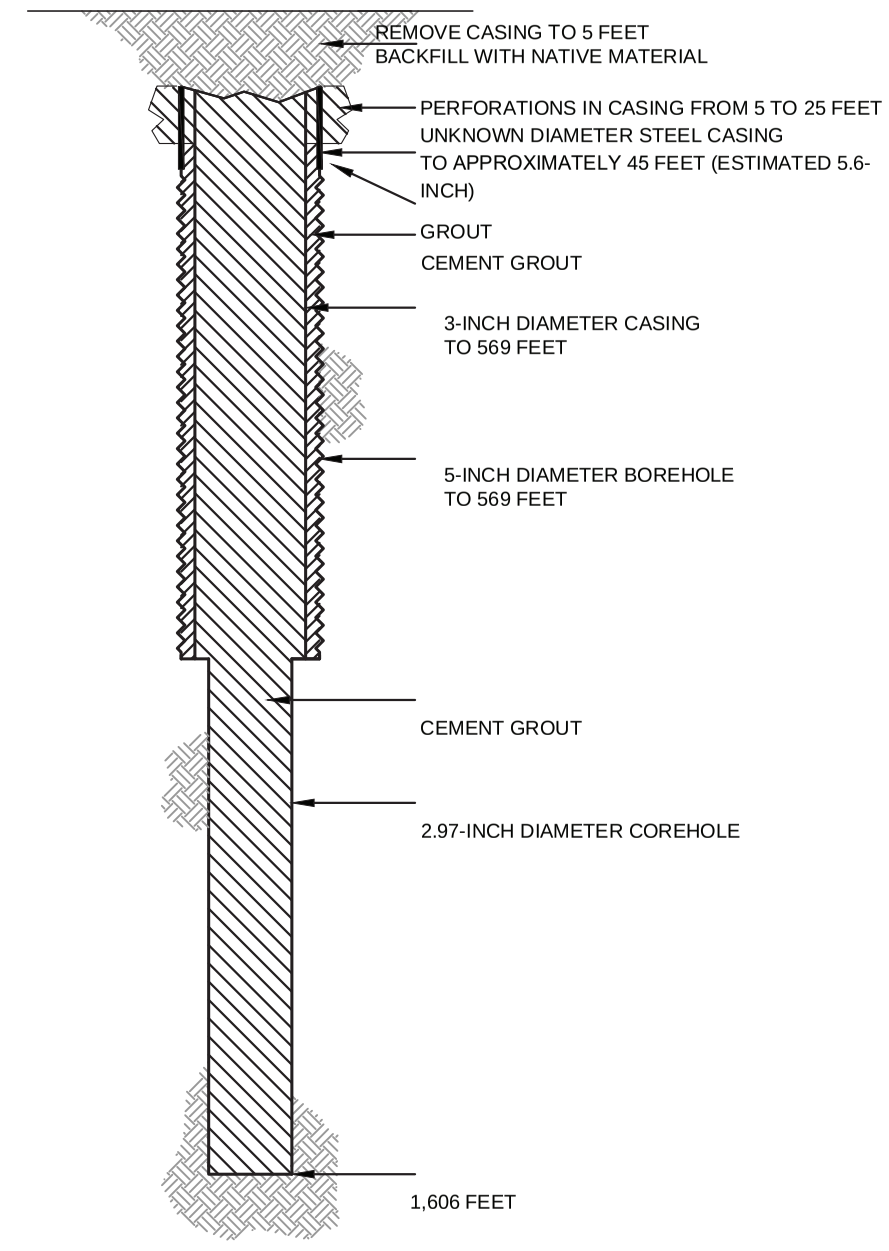

HALEY ALDRICH

FLORENCE COPPER, INC.
FLORENCE, ARIZONA

COREHOLE 355S DIAGRAM

FLORENCE COPPER INC.

NOT TO SCALE
SEPTEMBER 2019

FIGURE 1

MOBINI, GITA Printed: 4/21/2017 12:00 PM Layout: ABANDON (2)
\PROJECTS\CURIS RESOURCES38706-CURIS FEASIBILITY\DRAWINGS\EPA\WELL ABANDON\415S_ABANDON.DWG

OMB No. 2040-0042 Approval Expires 4/30/2022

United States Environmental Protection Agency

EPA

WELL REWORK RECORD, PLUGGING AND ABANDONMENT PLAN, OR PLUGGING AND ABANDONMENT AFFIDAVIT

Name and Address, Phone Number and/or Email of Permittee

Florence Copper Project
1575 W Hunt Hwy,
Florence, AZ 85132

Permit or EPA ID Number	API Number	Full Well Name
R9UIC-AZ3-FY11-1		358S

State	County
Arizona	Pinal

Locate well in two directions from nearest lines of quarter section and drilling unit

Latitude 33.0503538

Surface Location

NE **1/4 of** SW **1/4 of Section** 28 **Township** 4S **Range** 9E

Longitude -111.4317853

_____ **ft. from (N/S)** _____ **Line of quarter section**

_____ **ft. from (E/W)** _____ **Line of quarter section.**

Well Class	Timing of Action (pick one)	Type of Action (pick one)
☐ Class I ☐ Class II ☑ Class III ☐ Class V	☑ Notice Prior to Work Date Expected to Commence March 2021 ☐ Report After Work Date Work Ended	☐ Well Rework ☑ Plugging and Abandonment ☐ Conversion to a Non-Injection Well

Provide a narrative description of the work planned to be performed, or that was performed. Use additional pages as necessary. See instructions.

A workover rig capable of performing the required abandonment operations at the required depths will be moved in and set up over the core hole. The core hole will be inspected to determine the depth to which the hole remains open and if any obstructions are present in the core hole; the presence and condition of any existing collar will also be documented. If necessary, the core hole will be cleaned out to a depth of at least 100 feet below the bedrock-LBFU contact to enable placement of cement seals.

If collar is present, an attempt will be made to remove it. If removal of the collar is not feasible, it will be left in the hole and perforated as needed to allow an annular seal to be placed to a depth of at least 25 feet bgs. In areas of agricultural use, the surface casing will be cut at least 5 feet bgs and removed.

If the collar cannot be removed, it will be perforated from at least 20 feet below the bedrock-LBFU contact to at least 20 feet above the contact; from at least 20 feet below the base of the MFGU to at least 20 feet above the top of the MFGU; and from at least 25 feet bgs to 5 feet bgs.

A tremie pipe will be used to place Type V cement in the open core hole from the bottom of the core hole to the top of the core hole. Cement retainers, as described above, will be used to force cement grout into the annulus and behind perforated intervals, as necessary.

If the hole has been obstructed, as much cement as possible will be placed from 100 feet below the LBFU-bedrock contact to the top of the core hole.

The volume of Type V cement will be recorded and will not be less than the estimated volume of material required to fill each interval. All cement grout will consist of Type V cement, or equivalent approved in accordance with the UIC Permit.

Certification

I certify under the penalty of law that I have personally examined and am familiar with the information submitted in this document and all attachments and that, based on my inquiry of those individuals immediately responsible for obtaining the information, I believe that the information is true, accurate, and complete. I am aware that there are significant penalties for submitting false information, including the possibliity of fine and imprisonment. (Ref. 40 CFR § 144.32)

Name and Official Title *(Please type or print)*	Signature	Date Signed
Dan Johnson, VP - General Manager		10/3/2019

INSTRUCTIONS FOR FORM 7520-19

This form replaces forms 7520-12 and 7520-14. Use this form only when work is planned or has occurred that affects the well's construction or operation as an injection well, including work on the casing, tubing or packer (or for shallow Class V wells, the subsurface fluid emplacement network). Use one form per injection well. While reports or other information developed by contractors or service companies may be attached, this form must be signed by a responsible entity as described at 40 CFR 144.32. Note: operators closing Class V wells should use Form 7520-17.

NAME, ADDRESS, PHONE AND/OR EMAIL OF PERMITTEE: Enter the name and street address, city/town, state, and ZIP code of the permittee. Also provide an email address (if available) and/or a phone number.

PERMIT OR EPA ID NUMBER: Enter the well identification number or permit number assigned to the well by the EPA or the permitting authority.

API NUMBER: Enter the number assigned by the local jurisdiction (usually a State Oil and Gas Agency) using the American Petroleum Institute standard numbering system.

FULL WELL NAME: Enter the full name of the well or project.

Enter the **STATE** and **COUNTY** where the well is located. For States that do not have counties, use the name of that State's equivalent jurisdiction at a more local level.

WELL LOCATION: Fill in the complete township, range, and section to the nearest quarter-quarter section. A township is north or south of the baseline, and a range is east or west of the principal meridian (e.g., T12N, R34W). Also include the distance, in feet, from the nearest north or south line and nearest east or west line of the quarter-section. Also, enter the **latitude** and **longitude** of the well in decimal degrees, to five or six places if possible; be sure to include a negative sign for the longitude of a well in the Western Hemisphere and a negative sign for the latitude of a well in the Southern Hemisphere.

Enter the **WELL CLASS,** i.e., the class of injection well as defined in 40 CFR 144.6.

TIMING OF THE ACTION: Check ***Notice prior to work*** if the activity has not yet occurred (i.e., is planned). Check ***Report after work*** if the activity described has already occurred. As appropriate, include the date the activity is expected to start or the date the activity was completed. (Note this may not be available, e.g., for a plugging plan submitted with a permit application.)

TYPE OF ACTION: Check the appropriate box to describe the kind of activity being reported. Check ***Well Rework*** for work that was/will be performed on the well after it has already been in operation as an injection well. Check ***Plugging and Abandonment*** to report on plans for or descriptions of final closure/plugging after use as an injection well. Check ***Conversion to a Non-Injection Well*** if the well is to be converted to something other than an injection well.

Provide a **NARRATIVE DESCRIPTION** of the work planned to be performed, or that was performed. The narrative should include a description of the main procedures planned or that occurred during the work activity. A service company report, daily report, or similar document may be attached if it includes all the requested information and is clear and legible.

For well reworks, include the following information: The reason for the well rework; depths of activity; type of activity; changes to injection well configuration, well casing, or cement behind casing; any plug added to the well and its depth; any newly drilled interval and its depth; method(s) to demonstrate that the well has mechanical integrity (as applicable); and any deviations from the approved rework plan (as applicable).

For a well plugging plan, include the following information: Reason for the well plugging; number of plugs placed, and their depths; materials used as plugs (e.g., cast iron bridge plug, cement, cement retainer); method to set plugs; and wait-on-cement times, if any. Also provide one or more cost estimates from an independent firm in the business of plugging and abandoning wells to plug the well as described in the plan.

For well plugging affidavit, include the following information: Reason for the well plugging; number of plugs placed, and their depths; materials used as plugs (e.g., cast iron bridge plug, cement, cement retainer); method to set plugs; wait-on-cement times, if any; and any deviations from the approved plugging plan (if applicable).

For conversion to a non-injection well, include the following information: Depths of activity; type of activity; changes to injection well configuration, well casing, or cement behind casing; any plug added to the well and its depth; any newly drilled interval and its depth; depths of new perforations; and method(s) to demonstrate that the well has mechanical integrity (as applicable).

For all of the above activities, include a well sketch depicting the work, results of well tests/logging performed, service company tickets, and any other available information demonstrating how the work was/is to be performed. Also, specify whether depths are below ground surface, relative to Kelly bushing, etc.

CERTIFICATION: This form must be signed and dated by either: a responsible corporate officer for a corporation, by a general partner for a partnership, by the proprietor of a sole proprietorship, or by a principal executive or ranking elected official for a public agency.

PAPERWORK REDUCTION ACT NOTICE: The public reporting and recordkeeping burden for this collection of information is estimated to average between 6.0 and 7.9 hours per response, depending on the injection well class. Burden means the total time, effort, or financial resource expended by persons to generate, maintain, retain, or disclose or provide information to or for a Federal Agency. This includes the time needed to review instructions; develop, acquire, install, and utilize technology and systems for the purposes of collecting, validating, and verifying information, processing and maintaining information, and disclosing and providing information; adjust the existing ways to comply with any previously applicable instructions and requirements; train personnel to be able to respond to the collection of information; search data sources; complete and review the collection of information; and, transmit or otherwise disclose the information. An agency may not conduct or sponsor, and a person is not required to respond to, a collection of information unless it displays a currently valid OMB control number. Send comments on the Agency's need for this information, the accuracy of the provided burden estimates, and any suggested methods for minimizing respondent burden, including the use of automated collection techniques to Director, Collection Strategies Division, U.S. Environmental Protection Agency (2822), 1200 Pennsylvania Ave., NW., Washington, D.C. 20460. Include the OMB control number in any correspondence. Do not send the completed forms to this address.

AS-BUILT COREHOLE 358S

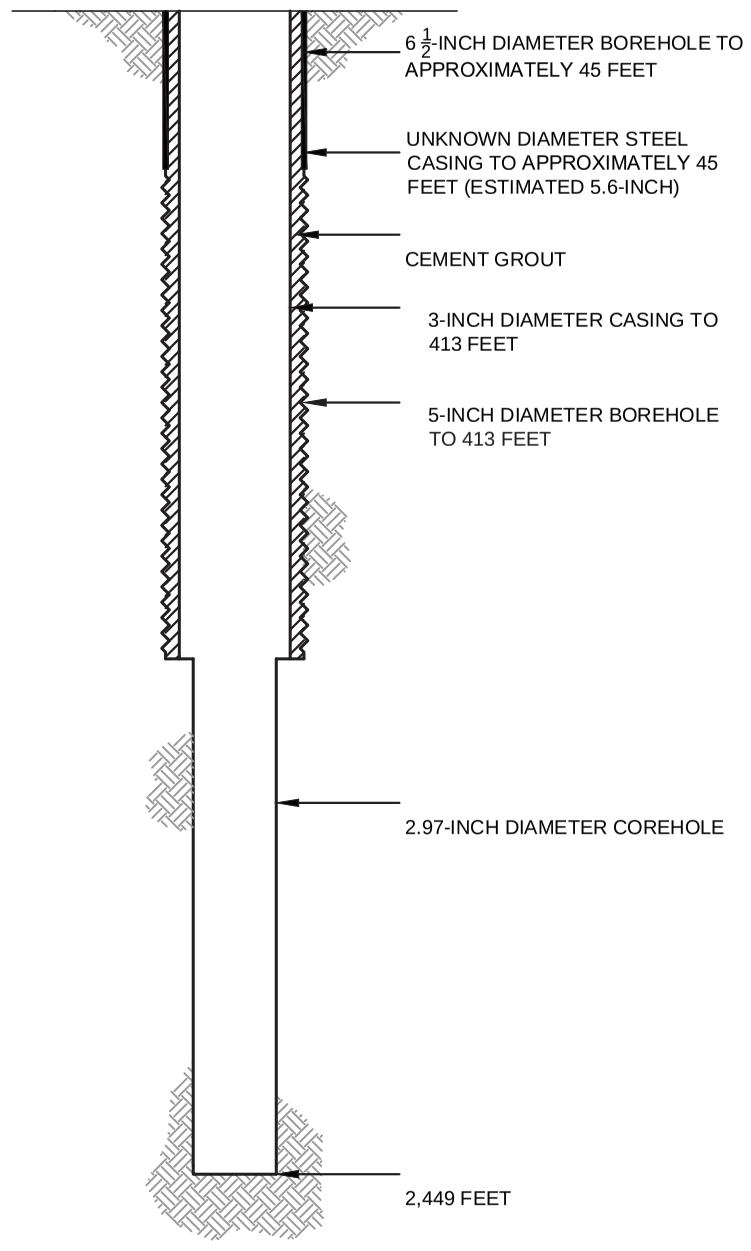

PROPOSED PLUGGING AND ABANDONMENT COREHOLE 358S

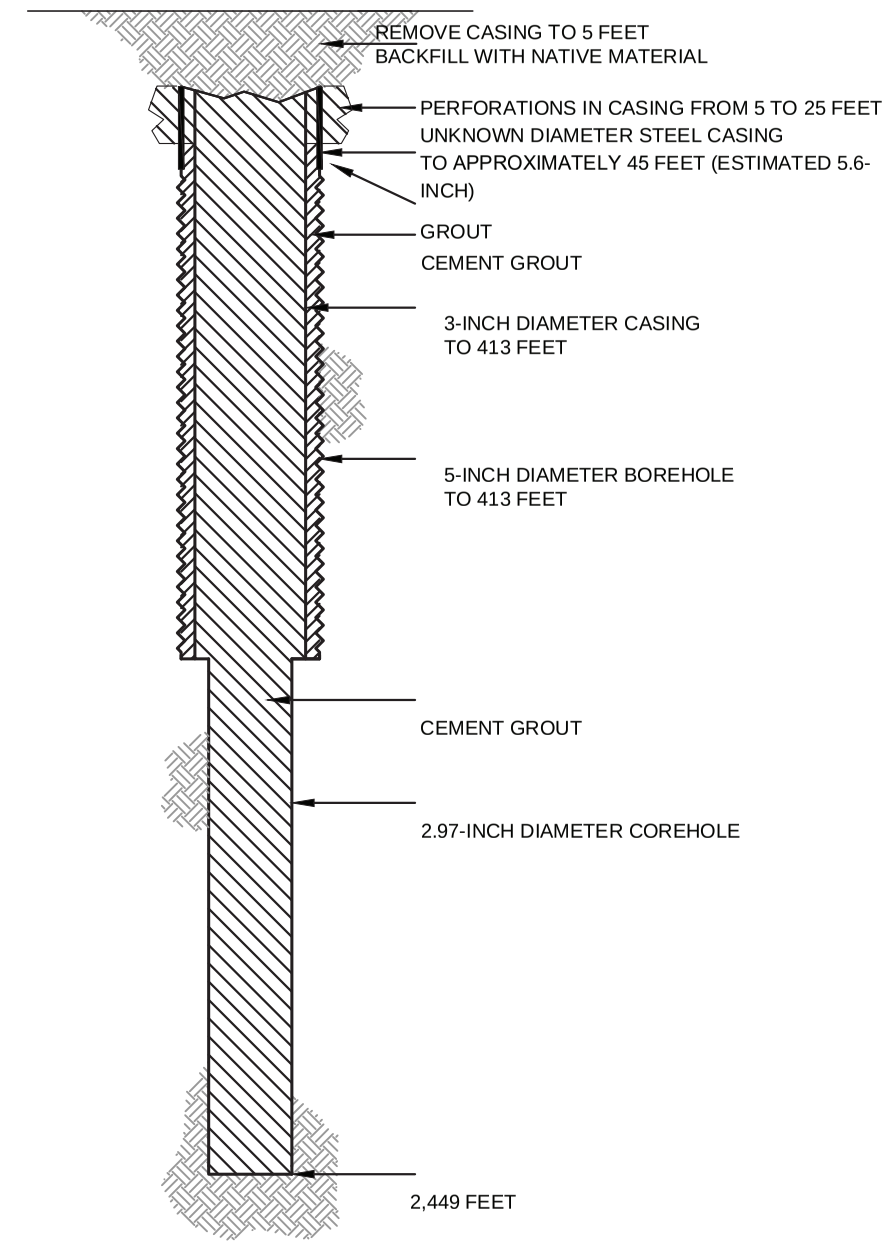

HALEY ALDRICH

FLORENCE COPPER, INC.
FLORENCE, ARIZONA

COREHOLE 358S DIAGRAM

FLORENCE COPPER INC.

NOT TO SCALE
SEPTEMBER 2019

FIGURE 1

MOBINI, GITA Printed: 4/21/2017 12:00 PM Layout: ABANDON (2)
\PROJECTS\CURIS RESOURCES38706-CURIS FEASIBILITY\DRAWINGS\EPA\WELL ABANDON\415S_ABANDON.DWG

OMB No. 2040-0042 Approval Expires 4/30/2022

United States Environmental Protection Agency

WELL REWORK RECORD, PLUGGING AND ABANDONMENT PLAN, OR PLUGGING AND ABANDONMENT AFFIDAVIT

Name and Address, Phone Number and/or Email of Permittee

Florence Copper Project
1575 W Hunt Hwy,
Florence, AZ 85132

Permit or EPA ID Number	API Number	Full Well Name
R9UIC-AZ3-FY11-1		359S

State	County
Arizona	Pinal

Locate well in two directions from nearest lines of quarter section and drilling unit

Latitude 33.04975715

Longitude -111.4313806

Surface Location

NE **1/4 of** SW **1/4 of Section** 28 **Township** 4S **Range** 9E

_____ **ft. from (N/S)** _____ **Line of quarter section**

_____ **ft. from (E/W)** _____ **Line of quarter section.**

Well Class	Timing of Action (pick one)	Type of Action (pick one)
☐ Class I ☐ Class II ☑ Class III ☐ Class V	☑ Notice Prior to Work Date Expected to Commence March 2021 ☐ Report After Work Date Work Ended	☐ Well Rework ☑ Plugging and Abandonment ☐ Conversion to a Non-Injection Well

Provide a narrative description of the work planned to be performed, or that was performed. Use additional pages as necessary. See instructions.

A workover rig capable of performing the required abandonment operations at the required depths will be moved in and set up over the core hole. The core hole will be inspected to determine the depth to which the hole remains open and if any obstructions are present in the core hole; the presence and condition of any existing collar will also be documented. If necessary, the core hole will be cleaned out to a depth of at least 100 feet below the bedrock-LBFU contact to enable placement of cement seals.

If collar is present, an attempt will be made to remove it. If removal of the collar is not feasible, it will be left in the hole and perforated as needed to allow an annular seal to be placed to a depth of at least 25 feet bgs. In areas of agricultural use, the surface casing will be cut at least 5 feet bgs and removed.

If the collar cannot be removed, it will be perforated from at least 20 feet below the bedrock-LBFU contact to at least 20 feet above the contact; from at least 20 feet below the base of the MFGU to at least 20 feet above the top of the MFGU; and from at least 25 feet bgs to 5 feet bgs.

A tremie pipe will be used to place Type V cement in the open core hole from the bottom of the core hole to the top of the core hole. Cement retainers, as described above, will be used to force cement grout into the annulus and behind perforated intervals, as necessary.

If the hole has been obstructed, as much cement as possible will be placed from 100 feet below the LBFU-bedrock contact to the top of the core hole.

The volume of Type V cement will be recorded and will not be less than the estimated volume of material required to fill each interval. All cement grout will consist of Type V cement, or equivalent approved in accordance with the UIC Permit.

Certification

I certify under the penalty of law that I have personally examined and am familiar with the information submitted in this document and all attachments and that, based on my inquiry of those individuals immediately responsible for obtaining the information, I believe that the information is true, accurate, and complete. I am aware that there are significant penalties for submitting false information, including the possibliity of fine and imprisonment. (Ref. 40 CFR § 144.32)

Name and Official Title *(Please type or print)*	Signature	Date Signed
Dan Johnson, VP - General Manager		10/3/2019

INSTRUCTIONS FOR FORM 7520-19

This form replaces forms 7520-12 and 7520-14. Use this form only when work is planned or has occurred that affects the well's construction or operation as an injection well, including work on the casing, tubing or packer (or for shallow Class V wells, the subsurface fluid emplacement network). Use one form per injection well. While reports or other information developed by contractors or service companies may be attached, this form must be signed by a responsible entity as described at 40 CFR 144.32. Note: operators closing Class V wells should use Form 7520-17.

NAME, ADDRESS, PHONE AND/OR EMAIL OF PERMITTEE: Enter the name and street address, city/town, state, and ZIP code of the permittee. Also provide an email address (if available) and/or a phone number.

PERMIT OR EPA ID NUMBER: Enter the well identification number or permit number assigned to the well by the EPA or the permitting authority.

API NUMBER: Enter the number assigned by the local jurisdiction (usually a State Oil and Gas Agency) using the American Petroleum Institute standard numbering system.

FULL WELL NAME: Enter the full name of the well or project.

Enter the **STATE** and **COUNTY** where the well is located. For States that do not have counties, use the name of that State's equivalent jurisdiction at a more local level.

WELL LOCATION: Fill in the complete township, range, and section to the nearest quarter-quarter section. A township is north or south of the baseline, and a range is east or west of the principal meridian (e.g., T12N, R34W). Also include the distance, in feet, from the nearest north or south line and nearest east or west line of the quarter-section. Also, enter the **latitude** and **longitude** of the well in decimal degrees, to five or six places if possible; be sure to include a negative sign for the longitude of a well in the Western Hemisphere and a negative sign for the latitude of a well in the Southern Hemisphere.

Enter the **WELL CLASS,** i.e., the class of injection well as defined in 40 CFR 144.6.

TIMING OF THE ACTION: Check ***Notice prior to work*** if the activity has not yet occurred (i.e., is planned). Check ***Report after work*** if the activity described has already occurred. As appropriate, include the date the activity is expected to start or the date the activity was completed. (Note this may not be available, e.g., for a plugging plan submitted with a permit application.)

TYPE OF ACTION: Check the appropriate box to describe the kind of activity being reported. Check ***Well Rework*** for work that was/will be performed on the well after it has already been in operation as an injection well. Check ***Plugging and Abandonment*** to report on plans for or descriptions of final closure/plugging after use as an injection well. Check ***Conversion to a Non-Injection Well*** if the well is to be converted to something other than an injection well.

Provide a **NARRATIVE DESCRIPTION** of the work planned to be performed, or that was performed. The narrative should include a description of the main procedures planned or that occurred during the work activity. A service company report, daily report, or similar document may be attached if it includes all the requested information and is clear and legible.

For well reworks, include the following information: The reason for the well rework; depths of activity; type of activity; changes to injection well configuration, well casing, or cement behind casing; any plug added to the well and its depth; any newly drilled interval and its depth; method(s) to demonstrate that the well has mechanical integrity (as applicable); and any deviations from the approved rework plan (as applicable).

For a well plugging plan, include the following information: Reason for the well plugging; number of plugs placed, and their depths; materials used as plugs (e.g., cast iron bridge plug, cement, cement retainer); method to set plugs; and wait-on-cement times, if any. Also provide one or more cost estimates from an independent firm in the business of plugging and abandoning wells to plug the well as described in the plan.

For well plugging affidavit, include the following information: Reason for the well plugging; number of plugs placed, and their depths; materials used as plugs (e.g., cast iron bridge plug, cement, cement retainer); method to set plugs; wait-on-cement times, if any; and any deviations from the approved plugging plan (if applicable).

For conversion to a non-injection well, include the following information: Depths of activity; type of activity; changes to injection well configuration, well casing, or cement behind casing; any plug added to the well and its depth; any newly drilled interval and its depth; depths of new perforations; and method(s) to demonstrate that the well has mechanical integrity (as applicable).

For all of the above activities, include a well sketch depicting the work, results of well tests/logging performed, service company tickets, and any other available information demonstrating how the work was/is to be performed. Also, specify whether depths are below ground surface, relative to Kelly bushing, etc.

CERTIFICATION: This form must be signed and dated by either: a responsible corporate officer for a corporation, by a general partner for a partnership, by the proprietor of a sole proprietorship, or by a principal executive or ranking elected official for a public agency.

PAPERWORK REDUCTION ACT NOTICE: The public reporting and recordkeeping burden for this collection of information is estimated to average between 6.0 and 7.9 hours per response, depending on the injection well class. Burden means the total time, effort, or financial resource expended by persons to generate, maintain, retain, or disclose or provide information to or for a Federal Agency. This includes the time needed to review instructions; develop, acquire, install, and utilize technology and systems for the purposes of collecting, validating, and verifying information, processing and maintaining information, and disclosing and providing information; adjust the existing ways to comply with any previously applicable instructions and requirements; train personnel to be able to respond to the collection of information; search data sources; complete and review the collection of information; and, transmit or otherwise disclose the information. An agency may not conduct or sponsor, and a person is not required to respond to, a collection of information unless it displays a currently valid OMB control number. Send comments on the Agency's need for this information, the accuracy of the provided burden estimates, and any suggested methods for minimizing respondent burden, including the use of automated collection techniques to Director, Collection Strategies Division, U.S. Environmental Protection Agency (2822), 1200 Pennsylvania Ave., NW., Washington, D.C. 20460. Include the OMB control number in any correspondence. Do not send the completed forms to this address.

AS-BUILT COREHOLE 359S

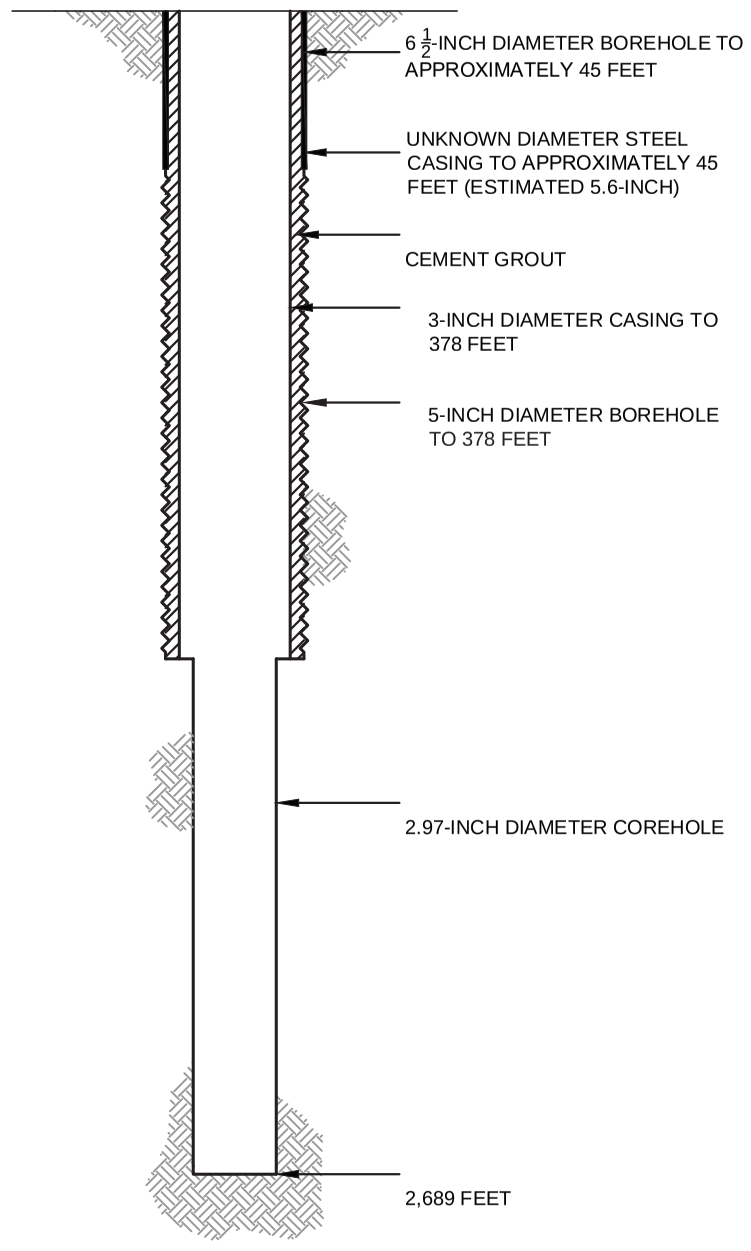

PROPOSED PLUGGING AND ABANDONMENT COREHOLE 359S

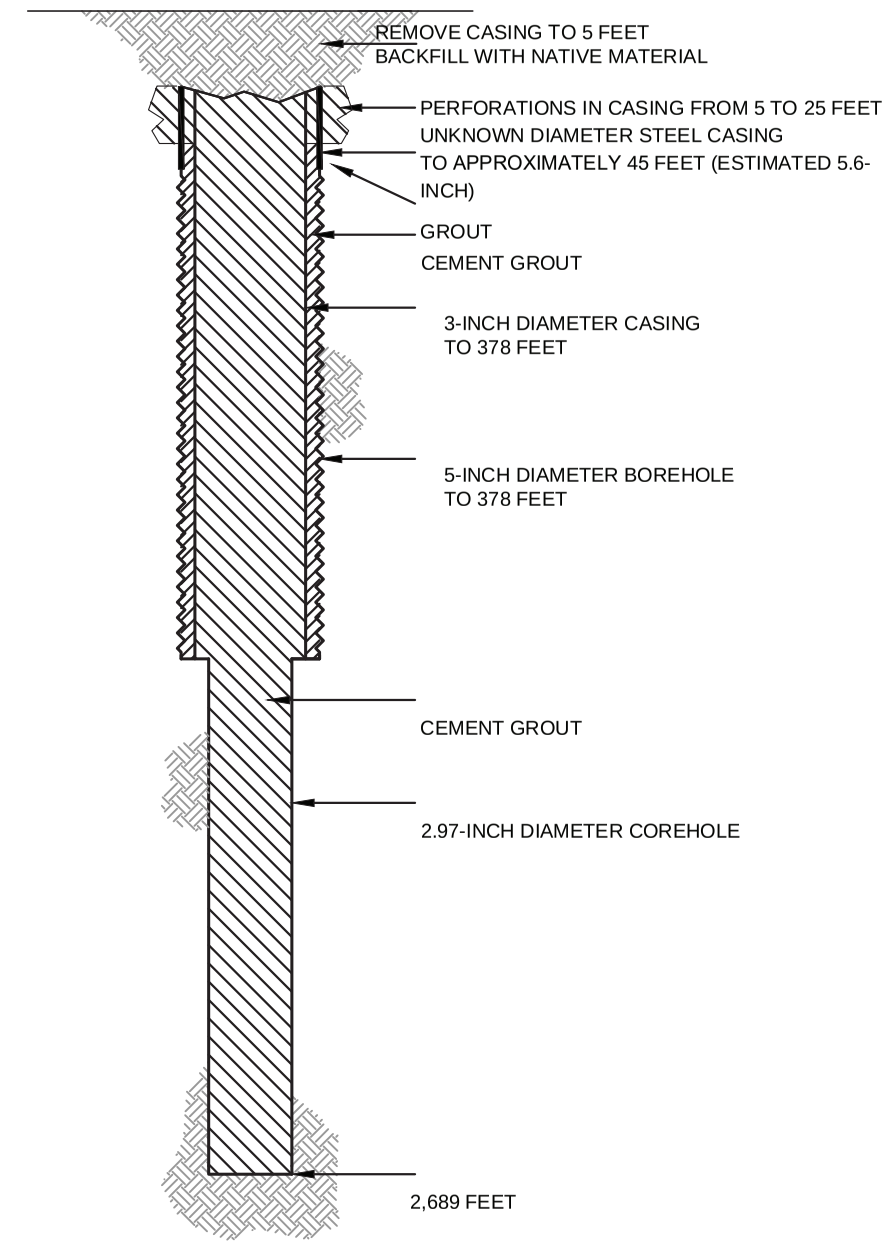

HALEY ALDRICH

FLORENCE COPPER, INC.
FLORENCE, ARIZONA

COREHOLE 359S DIAGRAM

FLORENCE COPPER INC.

NOT TO SCALE
SEPTEMBER 2019

FIGURE 1

MOBINI, GITA Printed: 4/21/2017 12:00 PM Layout: ABANDON (2)
\PROJECTS\CURIS RESOURCES38706-CURIS FEASIBILITY\DRAWINGS\EPA\WELL ABANDON\415S_ABANDON.DWG

OMB No. 2040-0042 Approval Expires 4/30/2022

United States Environmental Protection Agency

WELL REWORK RECORD, PLUGGING AND ABANDONMENT PLAN, OR PLUGGING AND ABANDONMENT AFFIDAVIT

Name and Address, Phone Number and/or Email of Permittee

Florence Copper Project
1575 W Hunt Hwy,
Florence, AZ 85132

Permit or EPA ID Number	API Number	Full Well Name
R9UIC-AZ3-FY11-1		360S

State	County
Arizona	Pinal

Locate well in two directions from nearest lines of quarter section and drilling unit

Latitude 33.05035062

Longitude -111.4309694

Surface Location

NE **1/4 of** SW **1/4 of Section** 28 **Township** 4S **Range** 9E

_____ **ft. from (N/S)** _____ **Line of quarter section**

_____ **ft. from (E/W)** _____ **Line of quarter section.**

Well Class	Timing of Action (pick one)	Type of Action (pick one)
☐ Class I ☐ Class II ☑ Class III ☐ Class V	☑ Notice Prior to Work Date Expected to Commence March 2021 ☐ Report After Work Date Work Ended	☐ Well Rework ☑ Plugging and Abandonment ☐ Conversion to a Non-Injection Well

Provide a narrative description of the work planned to be performed, or that was performed. Use additional pages as necessary. See instructions.

A workover rig capable of performing the required abandonment operations at the required depths will be moved in and set up over the core hole. The core hole will be inspected to determine the depth to which the hole remains open and if any obstructions are present in the core hole; the presence and condition of any existing collar will also be documented. If necessary, the core hole will be cleaned out to a depth of at least 100 feet below the bedrock-LBFU contact to enable placement of cement seals.

If collar is present, an attempt will be made to remove it. If removal of the collar is not feasible, it will be left in the hole and perforated as needed to allow an annular seal to be placed to a depth of at least 25 feet bgs. In areas of agricultural use, the surface casing will be cut at least 5 feet bgs and removed.

If the collar cannot be removed, it will be perforated from at least 20 feet below the bedrock-LBFU contact to at least 20 feet above the contact; from at least 20 feet below the base of the MFGU to at least 20 feet above the top of the MFGU; and from at least 25 feet bgs to 5 feet bgs.

A tremie pipe will be used to place Type V cement in the open core hole from the bottom of the core hole to the top of the core hole. Cement retainers, as described above, will be used to force cement grout into the annulus and behind perforated intervals, as necessary.

If the hole has been obstructed, as much cement as possible will be placed from 100 feet below the LBFU-bedrock contact to the top of the core hole.

The volume of Type V cement will be recorded and will not be less than the estimated volume of material required to fill each interval. All cement grout will consist of Type V cement, or equivalent approved in accordance with the UIC Permit.

Certification

I certify under the penalty of law that I have personally examined and am familiar with the information submitted in this document and all attachments and that, based on my inquiry of those individuals immediately responsible for obtaining the information, I believe that the information is true, accurate, and complete. I am aware that there are significant penalties for submitting false information, including the possibliity of fine and imprisonment. (Ref. 40 CFR § 144.32)

Name and Official Title *(Please type or print)*	Signature	Date Signed
Dan Johnson, VP - General Manager		10/3/2019

INSTRUCTIONS FOR FORM 7520-19

This form replaces forms 7520-12 and 7520-14. Use this form only when work is planned or has occurred that affects the well's construction or operation as an injection well, including work on the casing, tubing or packer (or for shallow Class V wells, the subsurface fluid emplacement network). Use one form per injection well. While reports or other information developed by contractors or service companies may be attached, this form must be signed by a responsible entity as described at 40 CFR 144.32. Note: operators closing Class V wells should use Form 7520-17.

NAME, ADDRESS, PHONE AND/OR EMAIL OF PERMITTEE: Enter the name and street address, city/town, state, and ZIP code of the permittee. Also provide an email address (if available) and/or a phone number.

PERMIT OR EPA ID NUMBER: Enter the well identification number or permit number assigned to the well by the EPA or the permitting authority.

API NUMBER: Enter the number assigned by the local jurisdiction (usually a State Oil and Gas Agency) using the American Petroleum Institute standard numbering system.

FULL WELL NAME: Enter the full name of the well or project.

Enter the **STATE** and **COUNTY** where the well is located. For States that do not have counties, use the name of that State's equivalent jurisdiction at a more local level.

WELL LOCATION: Fill in the complete township, range, and section to the nearest quarter-quarter section. A township is north or south of the baseline, and a range is east or west of the principal meridian (e.g., T12N, R34W). Also include the distance, in feet, from the nearest north or south line and nearest east or west line of the quarter-section. Also, enter the **latitude** and **longitude** of the well in decimal degrees, to five or six places if possible; be sure to include a negative sign for the longitude of a well in the Western Hemisphere and a negative sign for the latitude of a well in the Southern Hemisphere.

Enter the **WELL CLASS,** i.e., the class of injection well as defined in 40 CFR 144.6.

TIMING OF THE ACTION: Check ***Notice prior to work*** if the activity has not yet occurred (i.e., is planned). Check ***Report after work*** if the activity described has already occurred. As appropriate, include the date the activity is expected to start or the date the activity was completed. (Note this may not be available, e.g., for a plugging plan submitted with a permit application.)

TYPE OF ACTION: Check the appropriate box to describe the kind of activity being reported. Check ***Well Rework*** for work that was/will be performed on the well after it has already been in operation as an injection well. Check ***Plugging and Abandonment*** to report on plans for or descriptions of final closure/plugging after use as an injection well. Check ***Conversion to a Non-Injection Well*** if the well is to be converted to something other than an injection well.

Provide a **NARRATIVE DESCRIPTION** of the work planned to be performed, or that was performed. The narrative should include a description of the main procedures planned or that occurred during the work activity. A service company report, daily report, or similar document may be attached if it includes all the requested information and is clear and legible.

For well reworks, include the following information: The reason for the well rework; depths of activity; type of activity; changes to injection well configuration, well casing, or cement behind casing; any plug added to the well and its depth; any newly drilled interval and its depth; method(s) to demonstrate that the well has mechanical integrity (as applicable); and any deviations from the approved rework plan (as applicable).

For a well plugging plan, include the following information: Reason for the well plugging; number of plugs placed, and their depths; materials used as plugs (e.g., cast iron bridge plug, cement, cement retainer); method to set plugs; and wait-on-cement times, if any. Also provide one or more cost estimates from an independent firm in the business of plugging and abandoning wells to plug the well as described in the plan.

For well plugging affidavit, include the following information: Reason for the well plugging; number of plugs placed, and their depths; materials used as plugs (e.g., cast iron bridge plug, cement, cement retainer); method to set plugs; wait-on-cement times, if any; and any deviations from the approved plugging plan (if applicable).

For conversion to a non-injection well, include the following information: Depths of activity; type of activity; changes to injection well configuration, well casing, or cement behind casing; any plug added to the well and its depth; any newly drilled interval and its depth; depths of new perforations; and method(s) to demonstrate that the well has mechanical integrity (as applicable).

For all of the above activities, include a well sketch depicting the work, results of well tests/logging performed, service company tickets, and any other available information demonstrating how the work was/is to be performed. Also, specify whether depths are below ground surface, relative to Kelly bushing, etc.

CERTIFICATION: This form must be signed and dated by either: a responsible corporate officer for a corporation, by a general partner for a partnership, by the proprietor of a sole proprietorship, or by a principal executive or ranking elected official for a public agency.

PAPERWORK REDUCTION ACT NOTICE: The public reporting and recordkeeping burden for this collection of information is estimated to average between 6.0 and 7.9 hours per response, depending on the injection well class. Burden means the total time, effort, or financial resource expended by persons to generate, maintain, retain, or disclose or provide information to or for a Federal Agency. This includes the time needed to review instructions; develop, acquire, install, and utilize technology and systems for the purposes of collecting, validating, and verifying information, processing and maintaining information, and disclosing and providing information; adjust the existing ways to comply with any previously applicable instructions and requirements; train personnel to be able to respond to the collection of information; search data sources; complete and review the collection of information; and, transmit or otherwise disclose the information. An agency may not conduct or sponsor, and a person is not required to respond to, a collection of information unless it displays a currently valid OMB control number. Send comments on the Agency's need for this information, the accuracy of the provided burden estimates, and any suggested methods for minimizing respondent burden, including the use of automated collection techniques to Director, Collection Strategies Division, U.S. Environmental Protection Agency (2822), 1200 Pennsylvania Ave., NW., Washington, D.C. 20460. Include the OMB control number in any correspondence. Do not send the completed forms to this address.

AS-BUILT COREHOLE 360S

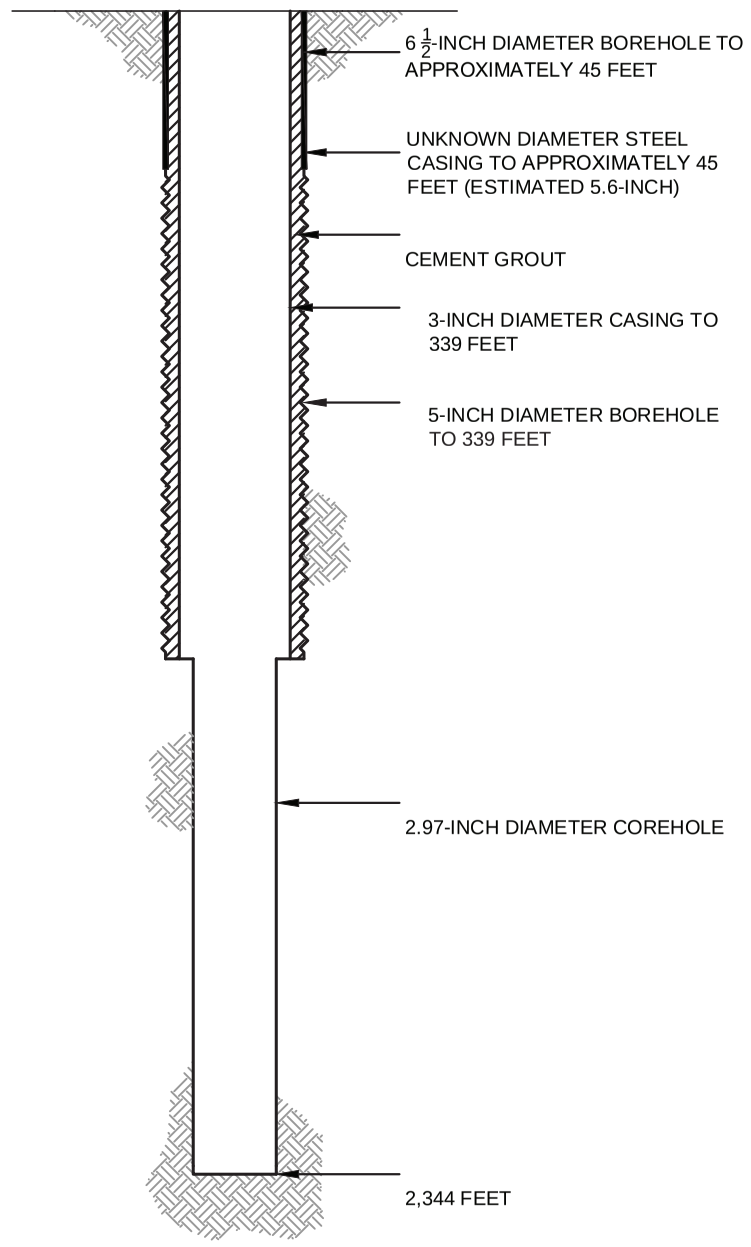

PROPOSED PLUGGING AND ABANDONMENT COREHOLE 360S

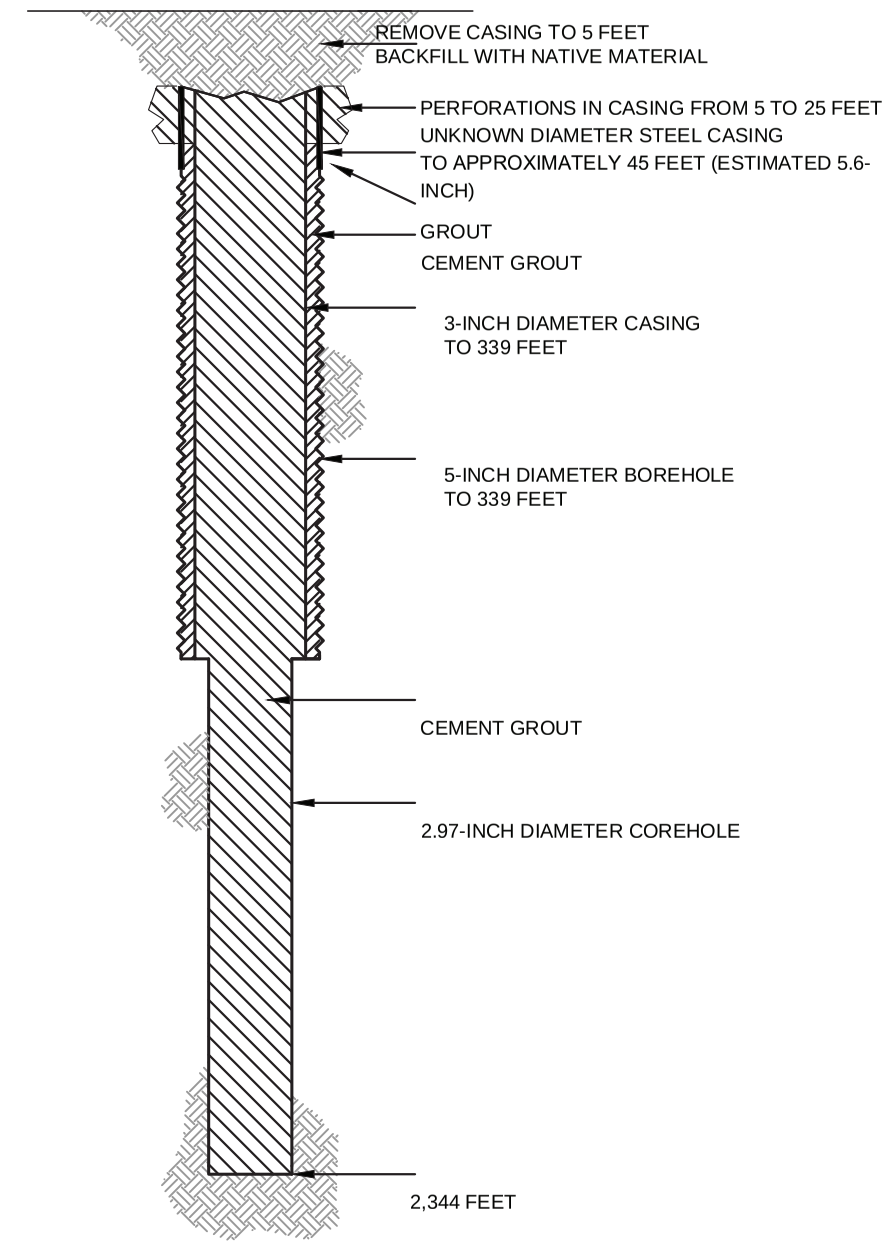

HALEY ALDRICH

FLORENCE COPPER, INC.
FLORENCE, ARIZONA

COREHOLE 360S DIAGRAM

FLORENCE COPPER INC.

NOT TO SCALE
SEPTEMBER 2019

FIGURE 1

MOBINI, GITA Printed: 4/21/2017 12:00 PM Layout: ABANDON (2)
\PROJECTS\CURIS RESOURCES38706-CURIS FEASIBILITY\DRAWINGS\EPA\WELL ABANDON\415S_ABANDON.DWG

OMB No. 2040-0042 Approval Expires 4/30/2022

United States Environmental Protection Agency

WELL REWORK RECORD, PLUGGING AND ABANDONMENT PLAN, OR PLUGGING AND ABANDONMENT AFFIDAVIT

Name and Address, Phone Number and/or Email of Permittee

Florence Copper Project
1575 W Hunt Hwy,
Florence, AZ 85132

Permit or EPA ID Number	API Number	Full Well Name
R9UIC-AZ3-FY11-1		361S

State	County
Arizona	Pinal

Locate well in two directions from nearest lines of quarter section and drilling unit

Latitude 33.0509441

Longitude -111.4305582

Surface Location

NE **1/4 of** SW **1/4 of Section** 28 **Township** 4S **Range** 9E

_____ **ft. from (N/S)** _____ **Line of quarter section**

_____ **ft. from (E/W)** _____ **Line of quarter section.**

Well Class	Timing of Action (pick one)	Type of Action (pick one)
☐ Class I ☐ Class II ☑ Class III ☐ Class V	☑ Notice Prior to Work Date Expected to Commence March 2021 ☐ Report After Work Date Work Ended	☐ Well Rework ☑ Plugging and Abandonment ☐ Conversion to a Non-Injection Well

Provide a narrative description of the work planned to be performed, or that was performed. Use additional pages as necessary. See instructions.

A workover rig capable of performing the required abandonment operations at the required depths will be moved in and set up over the core hole. The core hole will be inspected to determine the depth to which the hole remains open and if any obstructions are present in the core hole; the presence and condition of any existing collar will also be documented. If necessary, the core hole will be cleaned out to a depth of at least 100 feet below the bedrock-LBFU contact to enable placement of cement seals.

If collar is present, an attempt will be made to remove it. If removal of the collar is not feasible, it will be left in the hole and perforated as needed to allow an annular seal to be placed to a depth of at least 25 feet bgs. In areas of agricultural use, the surface casing will be cut at least 5 feet bgs and removed.

If the collar cannot be removed, it will be perforated from at least 20 feet below the bedrock-LBFU contact to at least 20 feet above the contact; from at least 20 feet below the base of the MFGU to at least 20 feet above the top of the MFGU; and from at least 25 feet bgs to 5 feet bgs.

A tremie pipe will be used to place Type V cement in the open core hole from the bottom of the core hole to the top of the core hole. Cement retainers, as described above, will be used to force cement grout into the annulus and behind perforated intervals, as necessary.

If the hole has been obstructed, as much cement as possible will be placed from 100 feet below the LBFU-bedrock contact to the top of the core hole.

The volume of Type V cement will be recorded and will not be less than the estimated volume of material required to fill each interval. All cement grout will consist of Type V cement, or equivalent approved in accordance with the UIC Permit.

Certification

I certify under the penalty of law that I have personally examined and am familiar with the information submitted in this document and all attachments and that, based on my inquiry of those individuals immediately responsible for obtaining the information, I believe that the information is true, accurate, and complete. I am aware that there are significant penalties for submitting false information, including the possibliity of fine and imprisonment. (Ref. 40 CFR § 144.32)

Name and Official Title *(Please type or print)*	Signature	Date Signed
Dan Johnson, VP - General Manager		10/3/2019

INSTRUCTIONS FOR FORM 7520-19

This form replaces forms 7520-12 and 7520-14. Use this form only when work is planned or has occurred that affects the well's construction or operation as an injection well, including work on the casing, tubing or packer (or for shallow Class V wells, the subsurface fluid emplacement network). Use one form per injection well. While reports or other information developed by contractors or service companies may be attached, this form must be signed by a responsible entity as described at 40 CFR 144.32. Note: operators closing Class V wells should use Form 7520-17.

NAME, ADDRESS, PHONE AND/OR EMAIL OF PERMITTEE: Enter the name and street address, city/town, state, and ZIP code of the permittee. Also provide an email address (if available) and/or a phone number.

PERMIT OR EPA ID NUMBER: Enter the well identification number or permit number assigned to the well by the EPA or the permitting authority.

API NUMBER: Enter the number assigned by the local jurisdiction (usually a State Oil and Gas Agency) using the American Petroleum Institute standard numbering system.

FULL WELL NAME: Enter the full name of the well or project.

Enter the **STATE** and **COUNTY** where the well is located. For States that do not have counties, use the name of that State's equivalent jurisdiction at a more local level.

WELL LOCATION: Fill in the complete township, range, and section to the nearest quarter-quarter section. A township is north or south of the baseline, and a range is east or west of the principal meridian (e.g., T12N, R34W). Also include the distance, in feet, from the nearest north or south line and nearest east or west line of the quarter-section. Also, enter the **latitude** and **longitude** of the well in decimal degrees, to five or six places if possible; be sure to include a negative sign for the longitude of a well in the Western Hemisphere and a negative sign for the latitude of a well in the Southern Hemisphere.

Enter the **WELL CLASS,** i.e., the class of injection well as defined in 40 CFR 144.6.

TIMING OF THE ACTION: Check ***Notice prior to work*** if the activity has not yet occurred (i.e., is planned). Check ***Report after work*** if the activity described has already occurred. As appropriate, include the date the activity is expected to start or the date the activity was completed. (Note this may not be available, e.g., for a plugging plan submitted with a permit application.)

TYPE OF ACTION: Check the appropriate box to describe the kind of activity being reported. Check ***Well Rework*** for work that was/will be performed on the well after it has already been in operation as an injection well. Check ***Plugging and Abandonment*** to report on plans for or descriptions of final closure/plugging after use as an injection well. Check ***Conversion to a Non-Injection Well*** if the well is to be converted to something other than an injection well.

Provide a **NARRATIVE DESCRIPTION** of the work planned to be performed, or that was performed. The narrative should include a description of the main procedures planned or that occurred during the work activity. A service company report, daily report, or similar document may be attached if it includes all the requested information and is clear and legible.

For well reworks, include the following information: The reason for the well rework; depths of activity; type of activity; changes to injection well configuration, well casing, or cement behind casing; any plug added to the well and its depth; any newly drilled interval and its depth; method(s) to demonstrate that the well has mechanical integrity (as applicable); and any deviations from the approved rework plan (as applicable).

For a well plugging plan, include the following information: Reason for the well plugging; number of plugs placed, and their depths; materials used as plugs (e.g., cast iron bridge plug, cement, cement retainer); method to set plugs; and wait-on-cement times, if any. Also provide one or more cost estimates from an independent firm in the business of plugging and abandoning wells to plug the well as described in the plan.

For well plugging affidavit, include the following information: Reason for the well plugging; number of plugs placed, and their depths; materials used as plugs (e.g., cast iron bridge plug, cement, cement retainer); method to set plugs; wait-on-cement times, if any; and any deviations from the approved plugging plan (if applicable).

For conversion to a non-injection well, include the following information: Depths of activity; type of activity; changes to injection well configuration, well casing, or cement behind casing; any plug added to the well and its depth; any newly drilled interval and its depth; depths of new perforations; and method(s) to demonstrate that the well has mechanical integrity (as applicable).

For all of the above activities, include a well sketch depicting the work, results of well tests/logging performed, service company tickets, and any other available information demonstrating how the work was/is to be performed. Also, specify whether depths are below ground surface, relative to Kelly bushing, etc.

CERTIFICATION: This form must be signed and dated by either: a responsible corporate officer for a corporation, by a general partner for a partnership, by the proprietor of a sole proprietorship, or by a principal executive or ranking elected official for a public agency.

PAPERWORK REDUCTION ACT NOTICE: The public reporting and recordkeeping burden for this collection of information is estimated to average between 6.0 and 7.9 hours per response, depending on the injection well class. Burden means the total time, effort, or financial resource expended by persons to generate, maintain, retain, or disclose or provide information to or for a Federal Agency. This includes the time needed to review instructions; develop, acquire, install, and utilize technology and systems for the purposes of collecting, validating, and verifying information, processing and maintaining information, and disclosing and providing information; adjust the existing ways to comply with any previously applicable instructions and requirements; train personnel to be able to respond to the collection of information; search data sources; complete and review the collection of information; and, transmit or otherwise disclose the information. An agency may not conduct or sponsor, and a person is not required to respond to, a collection of information unless it displays a currently valid OMB control number. Send comments on the Agency's need for this information, the accuracy of the provided burden estimates, and any suggested methods for minimizing respondent burden, including the use of automated collection techniques to Director, Collection Strategies Division, U.S. Environmental Protection Agency (2822), 1200 Pennsylvania Ave., NW., Washington, D.C. 20460. Include the OMB control number in any correspondence. Do not send the completed forms to this address.

AS-BUILT COREHOLE 361S

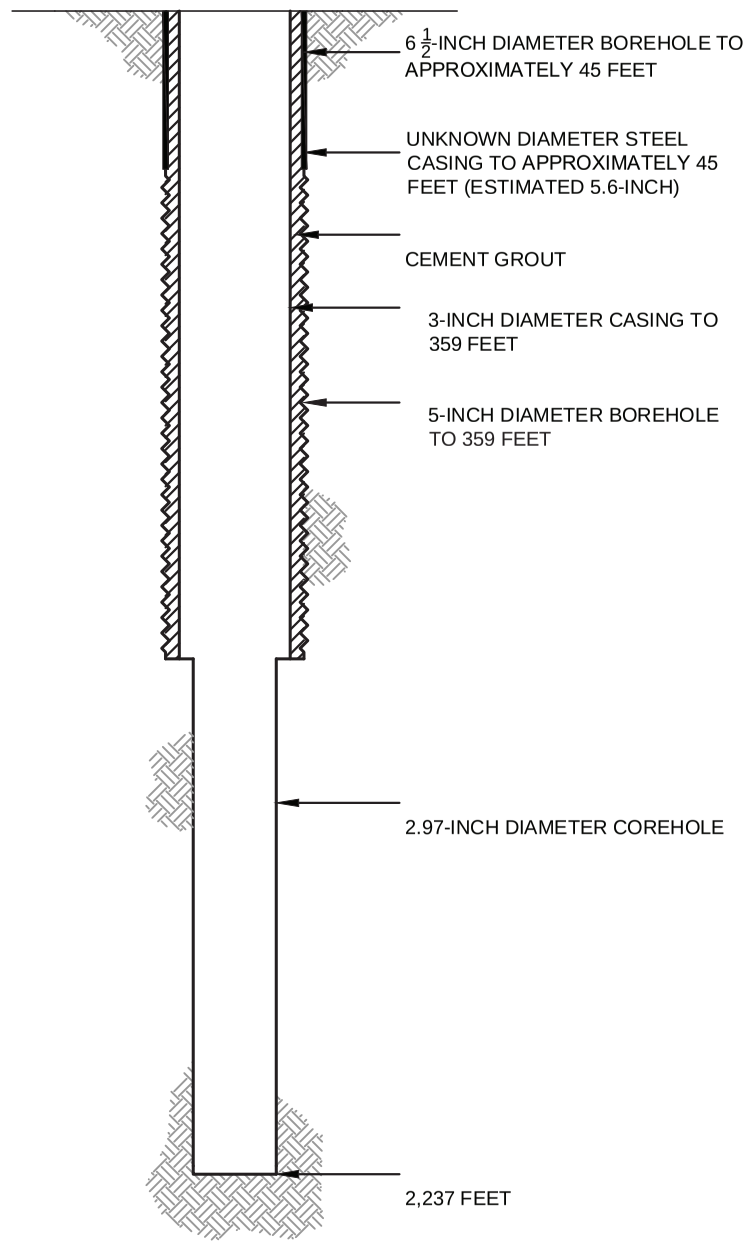

PROPOSED PLUGGING AND ABANDONMENT COREHOLE 361S

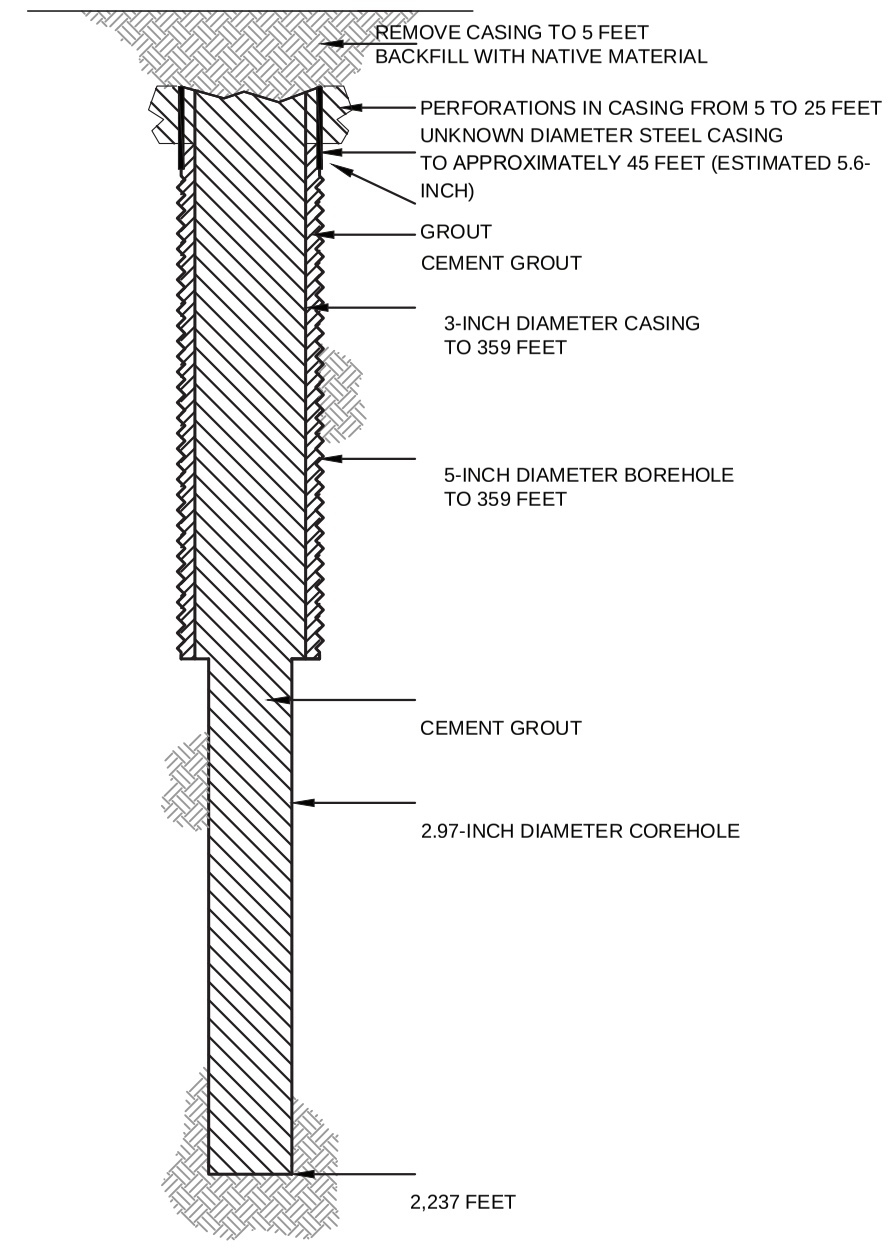

HALEY ALDRICH

FLORENCE COPPER, INC.
FLORENCE, ARIZONA

COREHOLE 361S DIAGRAM

FLORENCE COPPER INC.

NOT TO SCALE
SEPTEMBER 2019

FIGURE 1

MOBINI, GITA Printed: 4/21/2017 12:00 PM Layout: ABANDON (2)
\PROJECTS\CURIS RESOURCES38706-CURIS FEASIBILITY\DRAWINGS\EPA\WELL ABANDON\415S_ABANDON.DWG

OMB No. 2040-0042 Approval Expires 4/30/2022

United States Environmental Protection Agency

WELL REWORK RECORD, PLUGGING AND ABANDONMENT PLAN, OR PLUGGING AND ABANDONMENT AFFIDAVIT

Name and Address, Phone Number and/or Email of Permittee

Florence Copper Project
1575 W Hunt Hwy,
Florence, AZ 85132

Permit or EPA ID Number	API Number	Full Well Name
R9UIC-AZ3-FY11-1		362

State	County
Arizona	Pinal

Locate well in two directions from nearest lines of quarter section and drilling unit

Latitude 33.05331797

Longitude -111.4289133

Surface Location

SW **1/4 of** NE **1/4 of Section** 28 **Township** 4S **Range** 9E

_____ **ft. from (N/S)** _____ **Line of quarter section**

_____ **ft. from (E/W)** _____ **Line of quarter section.**

Well Class	Timing of Action (pick one)	Type of Action (pick one)
☐ Class I ☐ Class II ☑ Class III ☐ Class V	☑ Notice Prior to Work Date Expected to Commence March 2021 ☐ Report After Work Date Work Ended	☐ Well Rework ☑ Plugging and Abandonment ☐ Conversion to a Non-Injection Well

Provide a narrative description of the work planned to be performed, or that was performed. Use additional pages as necessary. See instructions.

A workover rig capable of performing the required abandonment operations at the required depths will be moved in and set up over the core hole. The core hole will be inspected to determine the depth to which the hole remains open and if any obstructions are present in the core hole; the presence and condition of any existing collar will also be documented. If necessary, the core hole will be cleaned out to a depth of at least 100 feet below the bedrock-LBFU contact to enable placement of cement seals.

If collar is present, an attempt will be made to remove it. If removal of the collar is not feasible, it will be left in the hole and perforated as needed to allow an annular seal to be placed to a depth of at least 25 feet bgs. In areas of agricultural use, the surface casing will be cut at least 5 feet bgs and removed.

If the collar cannot be removed, it will be perforated from at least 20 feet below the bedrock-LBFU contact to at least 20 feet above the contact; from at least 20 feet below the base of the MFGU to at least 20 feet above the top of the MFGU; and from at least 25 feet bgs to 5 feet bgs.

A tremie pipe will be used to place Type V cement in the open core hole from the bottom of the core hole to the top of the core hole. Cement retainers, as described above, will be used to force cement grout into the annulus and behind perforated intervals, as necessary.

If the hole has been obstructed, as much cement as possible will be placed from 100 feet below the LBFU-bedrock contact to the top of the core hole.

The volume of Type V cement will be recorded and will not be less than the estimated volume of material required to fill each interval. All cement grout will consist of Type V cement, or equivalent approved in accordance with the UIC Permit.

Certification

I certify under the penalty of law that I have personally examined and am familiar with the information submitted in this document and all attachments and that, based on my inquiry of those individuals immediately responsible for obtaining the information, I believe that the information is true, accurate, and complete. I am aware that there are significant penalties for submitting false information, including the possibliity of fine and imprisonment. (Ref. 40 CFR § 144.32)

Name and Official Title *(Please type or print)*	Signature	Date Signed
Dan Johnson, VP - General Manager		10/3/2019

INSTRUCTIONS FOR FORM 7520-19

This form replaces forms 7520-12 and 7520-14. Use this form only when work is planned or has occurred that affects the well's construction or operation as an injection well, including work on the casing, tubing or packer (or for shallow Class V wells, the subsurface fluid emplacement network). Use one form per injection well. While reports or other information developed by contractors or service companies may be attached, this form must be signed by a responsible entity as described at 40 CFR 144.32. Note: operators closing Class V wells should use Form 7520-17.

NAME, ADDRESS, PHONE AND/OR EMAIL OF PERMITTEE: Enter the name and street address, city/town, state, and ZIP code of the permittee. Also provide an email address (if available) and/or a phone number.

PERMIT OR EPA ID NUMBER: Enter the well identification number or permit number assigned to the well by the EPA or the permitting authority.

API NUMBER: Enter the number assigned by the local jurisdiction (usually a State Oil and Gas Agency) using the American Petroleum Institute standard numbering system.

FULL WELL NAME: Enter the full name of the well or project.

Enter the **STATE** and **COUNTY** where the well is located. For States that do not have counties, use the name of that State's equivalent jurisdiction at a more local level.

WELL LOCATION: Fill in the complete township, range, and section to the nearest quarter-quarter section. A township is north or south of the baseline, and a range is east or west of the principal meridian (e.g., T12N, R34W). Also include the distance, in feet, from the nearest north or south line and nearest east or west line of the quarter-section. Also, enter the **latitude** and **longitude** of the well in decimal degrees, to five or six places if possible; be sure to include a negative sign for the longitude of a well in the Western Hemisphere and a negative sign for the latitude of a well in the Southern Hemisphere.

Enter the **WELL CLASS,** i.e., the class of injection well as defined in 40 CFR 144.6.

TIMING OF THE ACTION: Check ***Notice prior to work*** if the activity has not yet occurred (i.e., is planned). Check ***Report after work*** if the activity described has already occurred. As appropriate, include the date the activity is expected to start or the date the activity was completed. (Note this may not be available, e.g., for a plugging plan submitted with a permit application.)

TYPE OF ACTION: Check the appropriate box to describe the kind of activity being reported. Check ***Well Rework*** for work that was/will be performed on the well after it has already been in operation as an injection well. Check ***Plugging and Abandonment*** to report on plans for or descriptions of final closure/plugging after use as an injection well. Check ***Conversion to a Non-Injection Well*** if the well is to be converted to something other than an injection well.

Provide a **NARRATIVE DESCRIPTION** of the work planned to be performed, or that was performed. The narrative should include a description of the main procedures planned or that occurred during the work activity. A service company report, daily report, or similar document may be attached if it includes all the requested information and is clear and legible.

For well reworks, include the following information: The reason for the well rework; depths of activity; type of activity; changes to injection well configuration, well casing, or cement behind casing; any plug added to the well and its depth; any newly drilled interval and its depth; method(s) to demonstrate that the well has mechanical integrity (as applicable); and any deviations from the approved rework plan (as applicable).

For a well plugging plan, include the following information: Reason for the well plugging; number of plugs placed, and their depths; materials used as plugs (e.g., cast iron bridge plug, cement, cement retainer); method to set plugs; and wait-on-cement times, if any. Also provide one or more cost estimates from an independent firm in the business of plugging and abandoning wells to plug the well as described in the plan.

For well plugging affidavit, include the following information: Reason for the well plugging; number of plugs placed, and their depths; materials used as plugs (e.g., cast iron bridge plug, cement, cement retainer); method to set plugs; wait-on-cement times, if any; and any deviations from the approved plugging plan (if applicable).

For conversion to a non-injection well, include the following information: Depths of activity; type of activity; changes to injection well configuration, well casing, or cement behind casing; any plug added to the well and its depth; any newly drilled interval and its depth; depths of new perforations; and method(s) to demonstrate that the well has mechanical integrity (as applicable).

For all of the above activities, include a well sketch depicting the work, results of well tests/logging performed, service company tickets, and any other available information demonstrating how the work was/is to be performed. Also, specify whether depths are below ground surface, relative to Kelly bushing, etc.

CERTIFICATION: This form must be signed and dated by either: a responsible corporate officer for a corporation, by a general partner for a partnership, by the proprietor of a sole proprietorship, or by a principal executive or ranking elected official for a public agency.

PAPERWORK REDUCTION ACT NOTICE: The public reporting and recordkeeping burden for this collection of information is estimated to average between 6.0 and 7.9 hours per response, depending on the injection well class. Burden means the total time, effort, or financial resource expended by persons to generate, maintain, retain, or disclose or provide information to or for a Federal Agency. This includes the time needed to review instructions; develop, acquire, install, and utilize technology and systems for the purposes of collecting, validating, and verifying information, processing and maintaining information, and disclosing and providing information; adjust the existing ways to comply with any previously applicable instructions and requirements; train personnel to be able to respond to the collection of information; search data sources; complete and review the collection of information; and, transmit or otherwise disclose the information. An agency may not conduct or sponsor, and a person is not required to respond to, a collection of information unless it displays a currently valid OMB control number. Send comments on the Agency's need for this information, the accuracy of the provided burden estimates, and any suggested methods for minimizing respondent burden, including the use of automated collection techniques to Director, Collection Strategies Division, U.S. Environmental Protection Agency (2822), 1200 Pennsylvania Ave., NW., Washington, D.C. 20460. Include the OMB control number in any correspondence. Do not send the completed forms to this address.

AS-BUILT COREHOLE 362

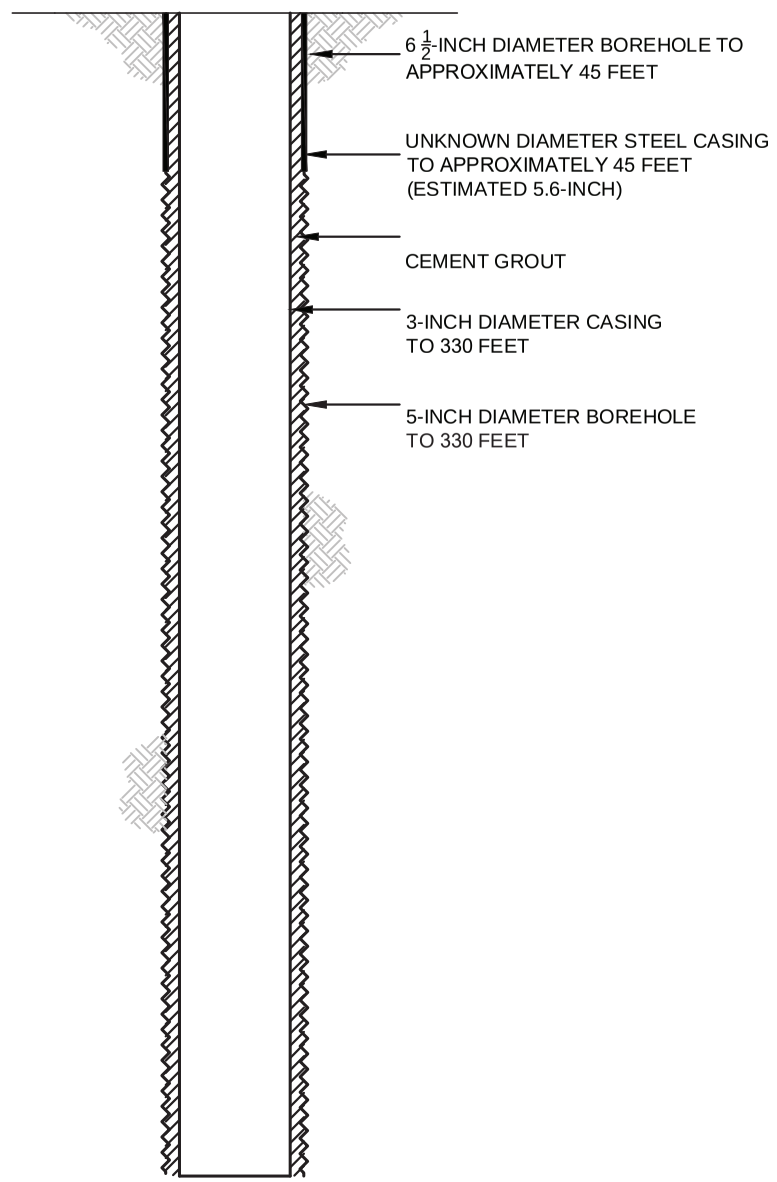

PROPOSED PLUGGING AND ABANDONMENT COREHOLE 362

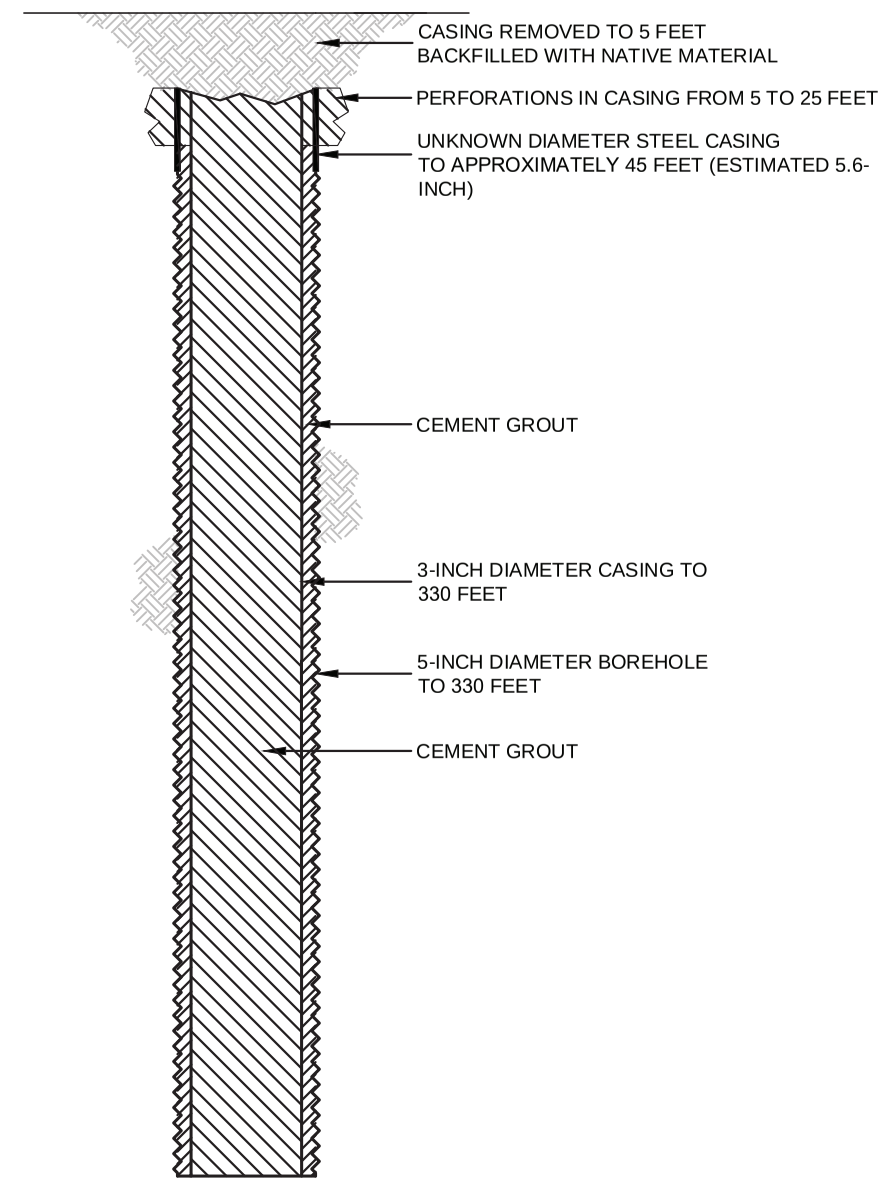

HALEY ALDRICH

FLORENCE COPPER, INC.
FLORENCE, ARIZONA

COREHOLE 362 DIAGRAM

FLORENCE COPPER INC.

NOT TO SCALE
SEPTEMBER 2019

FIGURE 1

MOBINI, GITA Printed: 4/21/2017 12:13 PM Layout: ABANDON (2)
G:\PROJECTS\CURIS RESOURCES\38706-CURIS FEASIBILITY\DRAWINGS\EPA\WELL\ABANDON\448S_ABANDON.DWG

OMB No. 2040-0042 Approval Expires 4/30/2022

United States Environmental Protection Agency

WELL REWORK RECORD, PLUGGING AND ABANDONMENT PLAN, OR PLUGGING AND ABANDONMENT AFFIDAVIT

Name and Address, Phone Number and/or Email of Permittee

Florence Copper Project
1575 W Hunt Hwy,
Florence, AZ 85132

Permit or EPA ID Number	API Number	Full Well Name
R9UIC-AZ3-FY11-1		363

State	County
Arizona	Pinal

Locate well in two directions from nearest lines of quarter section and drilling unit

Surface Location

SW 1/4 of NE 1/4 of Section 28 Township 4S Range 9E

Latitude 33.05391144

Longitude -111.428502

ft. from (N/S) Line of quarter section

ft. from (E/W) Line of quarter section.

Well Class	Timing of Action (pick one)	Type of Action (pick one)
☐ Class I ☐ Class II ☑ Class III ☐ Class V	☑ Notice Prior to Work Date Expected to Commence March 2021 ☐ Report After Work Date Work Ended	☐ Well Rework ☑ Plugging and Abandonment ☐ Conversion to a Non-Injection Well

Provide a narrative description of the work planned to be performed, or that was performed. Use additional pages as necessary. See instructions.

A workover rig capable of performing the required abandonment operations at the required depths will be moved in and set up over the core hole. The core hole will be inspected to determine the depth to which the hole remains open and if any obstructions are present in the core hole; the presence and condition of any existing collar will also be documented. If necessary, the core hole will be cleaned out to a depth of at least 100 feet below the bedrock-LBFU contact to enable placement of cement seals.

If collar is present, an attempt will be made to remove it. If removal of the collar is not feasible, it will be left in the hole and perforated as needed to allow an annular seal to be placed to a depth of at least 25 feet bgs. In areas of agricultural use, the surface casing will be cut at least 5 feet bgs and removed.

If the collar cannot be removed, it will be perforated from at least 20 feet below the bedrock-LBFU contact to at least 20 feet above the contact; from at least 20 feet below the base of the MFGU to at least 20 feet above the top of the MFGU; and from at least 25 feet bgs to 5 feet bgs.

A tremie pipe will be used to place Type V cement in the open core hole from the bottom of the core hole to the top of the core hole. Cement retainers, as described above, will be used to force cement grout into the annulus and behind perforated intervals, as necessary.

If the hole has been obstructed, as much cement as possible will be placed from 100 feet below the LBFU-bedrock contact to the top of the core hole.

The volume of Type V cement will be recorded and will not be less than the estimated volume of material required to fill each interval. All cement grout will consist of Type V cement, or equivalent approved in accordance with the UIC Permit.

Certification

I certify under the penalty of law that I have personally examined and am familiar with the information submitted in this document and all attachments and that, based on my inquiry of those individuals immediately responsible for obtaining the information, I believe that the information is true, accurate, and complete. I am aware that there are significant penalties for submitting false information, including the possibliity of fine and imprisonment. (Ref. 40 CFR § 144.32)

Name and Official Title *(Please type or print)*	Signature	Date Signed
Dan Johnson, VP - General Manager		10/3/2019

INSTRUCTIONS FOR FORM 7520-19

This form replaces forms 7520-12 and 7520-14. Use this form only when work is planned or has occurred that affects the well's construction or operation as an injection well, including work on the casing, tubing or packer (or for shallow Class V wells, the subsurface fluid emplacement network). Use one form per injection well. While reports or other information developed by contractors or service companies may be attached, this form must be signed by a responsible entity as described at 40 CFR 144.32. Note: operators closing Class V wells should use Form 7520-17.

NAME, ADDRESS, PHONE AND/OR EMAIL OF PERMITTEE: Enter the name and street address, city/town, state, and ZIP code of the permittee. Also provide an email address (if available) and/or a phone number.

PERMIT OR EPA ID NUMBER: Enter the well identification number or permit number assigned to the well by the EPA or the permitting authority.

API NUMBER: Enter the number assigned by the local jurisdiction (usually a State Oil and Gas Agency) using the American Petroleum Institute standard numbering system.

FULL WELL NAME: Enter the full name of the well or project.

Enter the **STATE** and **COUNTY** where the well is located. For States that do not have counties, use the name of that State's equivalent jurisdiction at a more local level.

WELL LOCATION: Fill in the complete township, range, and section to the nearest quarter-quarter section. A township is north or south of the baseline, and a range is east or west of the principal meridian (e.g., T12N, R34W). Also include the distance, in feet, from the nearest north or south line and nearest east or west line of the quarter-section. Also, enter the **latitude** and **longitude** of the well in decimal degrees, to five or six places if possible; be sure to include a negative sign for the longitude of a well in the Western Hemisphere and a negative sign for the latitude of a well in the Southern Hemisphere.

Enter the **WELL CLASS,** i.e., the class of injection well as defined in 40 CFR 144.6.

TIMING OF THE ACTION: Check ***Notice prior to work*** if the activity has not yet occurred (i.e., is planned). Check ***Report after work*** if the activity described has already occurred. As appropriate, include the date the activity is expected to start or the date the activity was completed. (Note this may not be available, e.g., for a plugging plan submitted with a permit application.)

TYPE OF ACTION: Check the appropriate box to describe the kind of activity being reported. Check ***Well Rework*** for work that was/will be performed on the well after it has already been in operation as an injection well. Check ***Plugging and Abandonment*** to report on plans for or descriptions of final closure/plugging after use as an injection well. Check ***Conversion to a Non-Injection Well*** if the well is to be converted to something other than an injection well.

Provide a **NARRATIVE DESCRIPTION** of the work planned to be performed, or that was performed. The narrative should include a description of the main procedures planned or that occurred during the work activity. A service company report, daily report, or similar document may be attached if it includes all the requested information and is clear and legible.

For well reworks, include the following information: The reason for the well rework; depths of activity; type of activity; changes to injection well configuration, well casing, or cement behind casing; any plug added to the well and its depth; any newly drilled interval and its depth; method(s) to demonstrate that the well has mechanical integrity (as applicable); and any deviations from the approved rework plan (as applicable).

For a well plugging plan, include the following information: Reason for the well plugging; number of plugs placed, and their depths; materials used as plugs (e.g., cast iron bridge plug, cement, cement retainer); method to set plugs; and wait-on-cement times, if any. Also provide one or more cost estimates from an independent firm in the business of plugging and abandoning wells to plug the well as described in the plan.

For well plugging affidavit, include the following information: Reason for the well plugging; number of plugs placed, and their depths; materials used as plugs (e.g., cast iron bridge plug, cement, cement retainer); method to set plugs; wait-on-cement times, if any; and any deviations from the approved plugging plan (if applicable).

For conversion to a non-injection well, include the following information: Depths of activity; type of activity; changes to injection well configuration, well casing, or cement behind casing; any plug added to the well and its depth; any newly drilled interval and its depth; depths of new perforations; and method(s) to demonstrate that the well has mechanical integrity (as applicable).

For all of the above activities, include a well sketch depicting the work, results of well tests/logging performed, service company tickets, and any other available information demonstrating how the work was/is to be performed. Also, specify whether depths are below ground surface, relative to Kelly bushing, etc.

CERTIFICATION: This form must be signed and dated by either: a responsible corporate officer for a corporation, by a general partner for a partnership, by the proprietor of a sole proprietorship, or by a principal executive or ranking elected official for a public agency.

PAPERWORK REDUCTION ACT NOTICE: The public reporting and recordkeeping burden for this collection of information is estimated to average between 6.0 and 7.9 hours per response, depending on the injection well class. Burden means the total time, effort, or financial resource expended by persons to generate, maintain, retain, or disclose or provide information to or for a Federal Agency. This includes the time needed to review instructions; develop, acquire, install, and utilize technology and systems for the purposes of collecting, validating, and verifying information, processing and maintaining information, and disclosing and providing information; adjust the existing ways to comply with any previously applicable instructions and requirements; train personnel to be able to respond to the collection of information; search data sources; complete and review the collection of information; and, transmit or otherwise disclose the information. An agency may not conduct or sponsor, and a person is not required to respond to, a collection of information unless it displays a currently valid OMB control number. Send comments on the Agency's need for this information, the accuracy of the provided burden estimates, and any suggested methods for minimizing respondent burden, including the use of automated collection techniques to Director, Collection Strategies Division, U.S. Environmental Protection Agency (2822), 1200 Pennsylvania Ave., NW., Washington, D.C. 20460. Include the OMB control number in any correspondence. Do not send the completed forms to this address.

AS-BUILT COREHOLE 363

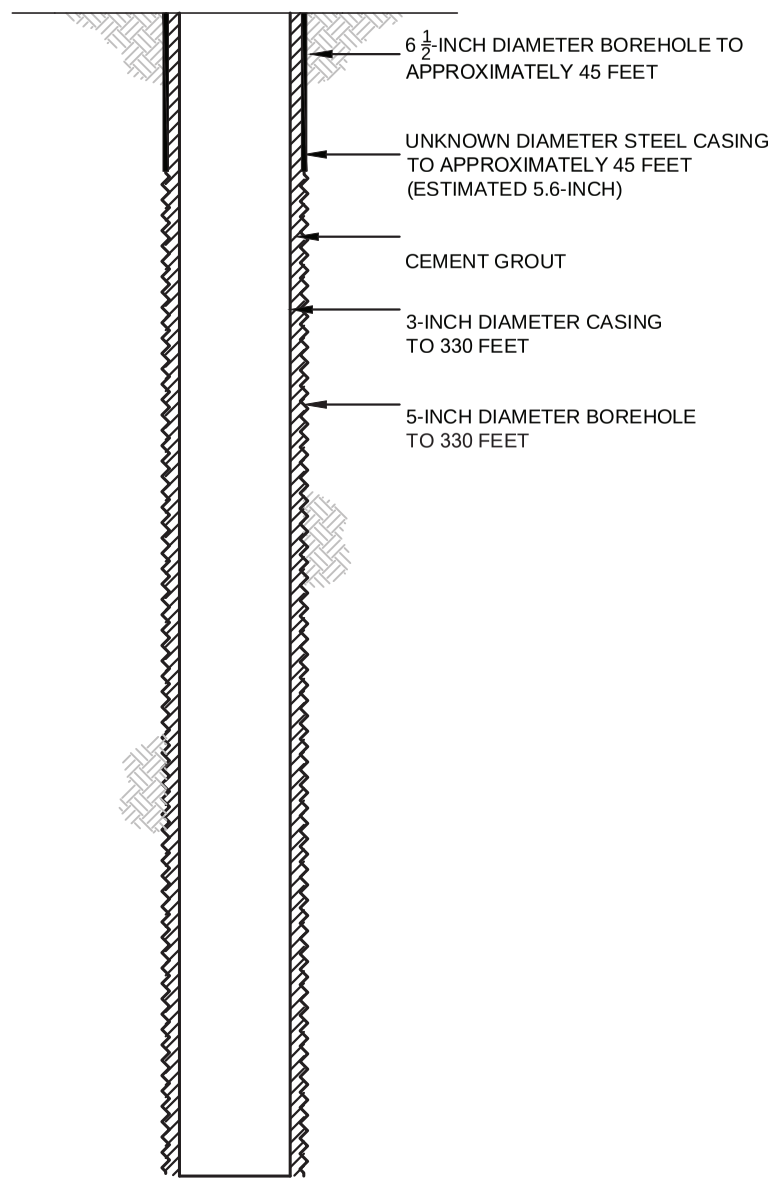

PROPOSED PLUGGING AND ABANDONMENT COREHOLE 363

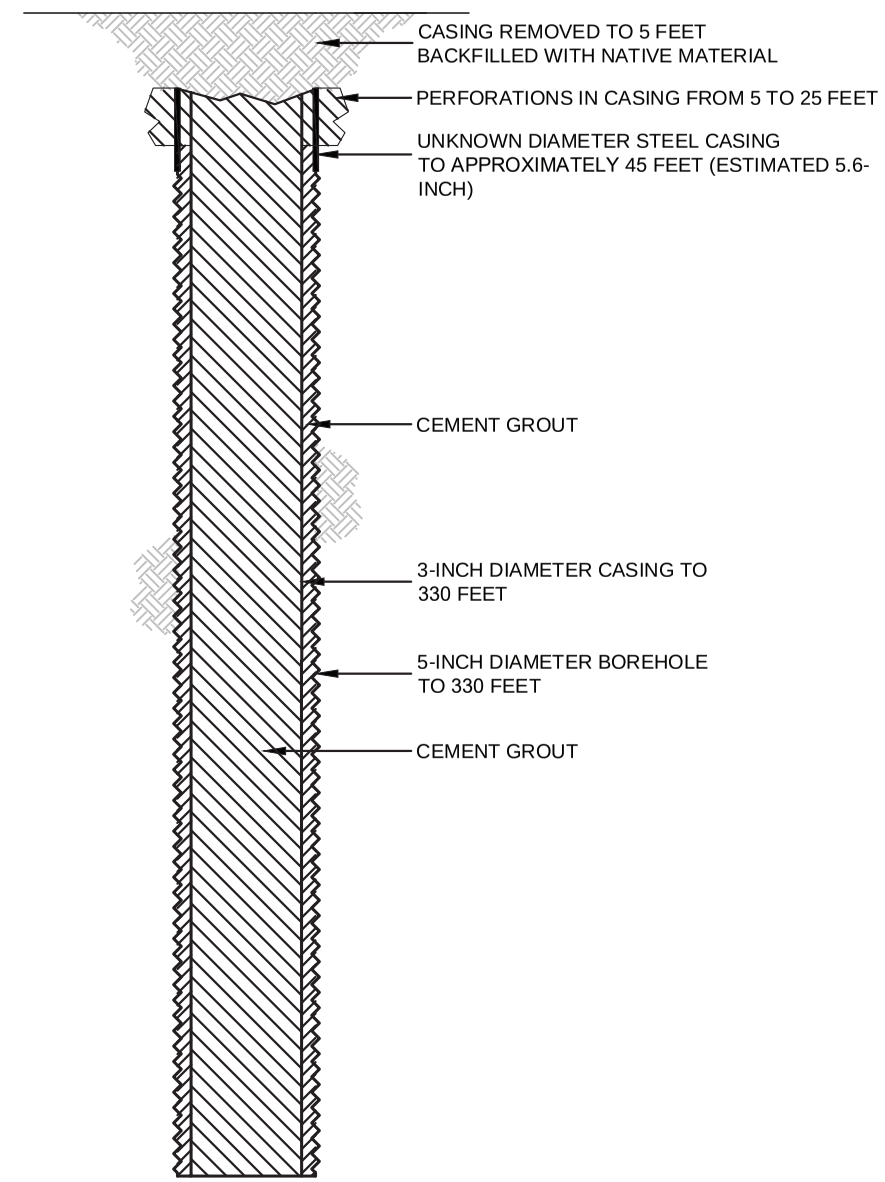

HALEY ALDRICH

FLORENCE COPPER, INC.
FLORENCE, ARIZONA

COREHOLE 363 DIAGRAM

FLORENCE COPPER INC.

NOT TO SCALE
SEPTEMBER 2019

FIGURE 1

MOBINI, GITA Printed: 4/21/2017 12:13 PM Layout: ABANDON (2)
G:\PROJECTS\CURIS RESOURCES\38706-CURIS FEASIBILITY\DRAWINGS\EPA\WELL\ABANDON\448S_ABANDON.DWG

OMB No. 2040-0042 Approval Expires 4/30/2022

United States Environmental Protection Agency

WELL REWORK RECORD, PLUGGING AND ABANDONMENT PLAN, OR PLUGGING AND ABANDONMENT AFFIDAVIT

Name and Address, Phone Number and/or Email of Permittee

Florence Copper Project
1575 W Hunt Hwy,
Florence, AZ 85132

Permit or EPA ID Number	API Number	Full Well Name
R9UIC-AZ3-FY11-1		364

State	County
Arizona	Pinal

Locate well in two directions from nearest lines of quarter section and drilling unit

Latitude 33.05331158

Longitude -111.4272815

Surface Location

SW **1/4 of** NE **1/4 of Section** 28 **Township** 4S **Range** 9E

_____ **ft. from (N/S)** _____ **Line of quarter section**

_____ **ft. from (E/W)** _____ **Line of quarter section.**

Well Class	Timing of Action (pick one)	Type of Action (pick one)
☐ Class I ☐ Class II ☑ Class III ☐ Class V	☑ Notice Prior to Work Date Expected to Commence March 2021 ☐ Report After Work Date Work Ended	☐ Well Rework ☑ Plugging and Abandonment ☐ Conversion to a Non-Injection Well

Provide a narrative description of the work planned to be performed, or that was performed. Use additional pages as necessary. See instructions.

A workover rig capable of performing the required abandonment operations at the required depths will be moved in and set up over the core hole. The core hole will be inspected to determine the depth to which the hole remains open and if any obstructions are present in the core hole; the presence and condition of any existing collar will also be documented. If necessary, the core hole will be cleaned out to a depth of at least 100 feet below the bedrock-LBFU contact to enable placement of cement seals.

If collar is present, an attempt will be made to remove it. If removal of the collar is not feasible, it will be left in the hole and perforated as needed to allow an annular seal to be placed to a depth of at least 25 feet bgs. In areas of agricultural use, the surface casing will be cut at least 5 feet bgs and removed.

If the collar cannot be removed, it will be perforated from at least 20 feet below the bedrock-LBFU contact to at least 20 feet above the contact; from at least 20 feet below the base of the MFGU to at least 20 feet above the top of the MFGU; and from at least 25 feet bgs to 5 feet bgs.

A tremie pipe will be used to place Type V cement in the open core hole from the bottom of the core hole to the top of the core hole. Cement retainers, as described above, will be used to force cement grout into the annulus and behind perforated intervals, as necessary.

If the hole has been obstructed, as much cement as possible will be placed from 100 feet below the LBFU-bedrock contact to the top of the core hole.

The volume of Type V cement will be recorded and will not be less than the estimated volume of material required to fill each interval. All cement grout will consist of Type V cement, or equivalent approved in accordance with the UIC Permit.

Certification

I certify under the penalty of law that I have personally examined and am familiar with the information submitted in this document and all attachments and that, based on my inquiry of those individuals immediately responsible for obtaining the information, I believe that the information is true, accurate, and complete. I am aware that there are significant penalties for submitting false information, including the possibliity of fine and imprisonment. (Ref. 40 CFR § 144.32)

Name and Official Title *(Please type or print)*	Signature	Date Signed
Dan Johnson, VP - General Manager		10/3/2019

INSTRUCTIONS FOR FORM 7520-19

This form replaces forms 7520-12 and 7520-14. Use this form only when work is planned or has occurred that affects the well's construction or operation as an injection well, including work on the casing, tubing or packer (or for shallow Class V wells, the subsurface fluid emplacement network). Use one form per injection well. While reports or other information developed by contractors or service companies may be attached, this form must be signed by a responsible entity as described at 40 CFR 144.32. Note: operators closing Class V wells should use Form 7520-17.

NAME, ADDRESS, PHONE AND/OR EMAIL OF PERMITTEE: Enter the name and street address, city/town, state, and ZIP code of the permittee. Also provide an email address (if available) and/or a phone number.

PERMIT OR EPA ID NUMBER: Enter the well identification number or permit number assigned to the well by the EPA or the permitting authority.

API NUMBER: Enter the number assigned by the local jurisdiction (usually a State Oil and Gas Agency) using the American Petroleum Institute standard numbering system.

FULL WELL NAME: Enter the full name of the well or project.

Enter the **STATE** and **COUNTY** where the well is located. For States that do not have counties, use the name of that State's equivalent jurisdiction at a more local level.

WELL LOCATION: Fill in the complete township, range, and section to the nearest quarter-quarter section. A township is north or south of the baseline, and a range is east or west of the principal meridian (e.g., T12N, R34W). Also include the distance, in feet, from the nearest north or south line and nearest east or west line of the quarter-section. Also, enter the **latitude** and **longitude** of the well in decimal degrees, to five or six places if possible; be sure to include a negative sign for the longitude of a well in the Western Hemisphere and a negative sign for the latitude of a well in the Southern Hemisphere.

Enter the **WELL CLASS,** i.e., the class of injection well as defined in 40 CFR 144.6.

TIMING OF THE ACTION: Check ***Notice prior to work*** if the activity has not yet occurred (i.e., is planned). Check ***Report after work*** if the activity described has already occurred. As appropriate, include the date the activity is expected to start or the date the activity was completed. (Note this may not be available, e.g., for a plugging plan submitted with a permit application.)

TYPE OF ACTION: Check the appropriate box to describe the kind of activity being reported. Check ***Well Rework*** for work that was/will be performed on the well after it has already been in operation as an injection well. Check ***Plugging and Abandonment*** to report on plans for or descriptions of final closure/plugging after use as an injection well. Check ***Conversion to a Non-Injection Well*** if the well is to be converted to something other than an injection well.

Provide a **NARRATIVE DESCRIPTION** of the work planned to be performed, or that was performed. The narrative should include a description of the main procedures planned or that occurred during the work activity. A service company report, daily report, or similar document may be attached if it includes all the requested information and is clear and legible.

For well reworks, include the following information: The reason for the well rework; depths of activity; type of activity; changes to injection well configuration, well casing, or cement behind casing; any plug added to the well and its depth; any newly drilled interval and its depth; method(s) to demonstrate that the well has mechanical integrity (as applicable); and any deviations from the approved rework plan (as applicable).

For a well plugging plan, include the following information: Reason for the well plugging; number of plugs placed, and their depths; materials used as plugs (e.g., cast iron bridge plug, cement, cement retainer); method to set plugs; and wait-on-cement times, if any. Also provide one or more cost estimates from an independent firm in the business of plugging and abandoning wells to plug the well as described in the plan.

For well plugging affidavit, include the following information: Reason for the well plugging; number of plugs placed, and their depths; materials used as plugs (e.g., cast iron bridge plug, cement, cement retainer); method to set plugs; wait-on-cement times, if any; and any deviations from the approved plugging plan (if applicable).

For conversion to a non-injection well, include the following information: Depths of activity; type of activity; changes to injection well configuration, well casing, or cement behind casing; any plug added to the well and its depth; any newly drilled interval and its depth; depths of new perforations; and method(s) to demonstrate that the well has mechanical integrity (as applicable).

For all of the above activities, include a well sketch depicting the work, results of well tests/logging performed, service company tickets, and any other available information demonstrating how the work was/is to be performed. Also, specify whether depths are below ground surface, relative to Kelly bushing, etc.

CERTIFICATION: This form must be signed and dated by either: a responsible corporate officer for a corporation, by a general partner for a partnership, by the proprietor of a sole proprietorship, or by a principal executive or ranking elected official for a public agency.

PAPERWORK REDUCTION ACT NOTICE: The public reporting and recordkeeping burden for this collection of information is estimated to average between 6.0 and 7.9 hours per response, depending on the injection well class. Burden means the total time, effort, or financial resource expended by persons to generate, maintain, retain, or disclose or provide information to or for a Federal Agency. This includes the time needed to review instructions; develop, acquire, install, and utilize technology and systems for the purposes of collecting, validating, and verifying information, processing and maintaining information, and disclosing and providing information; adjust the existing ways to comply with any previously applicable instructions and requirements; train personnel to be able to respond to the collection of information; search data sources; complete and review the collection of information; and, transmit or otherwise disclose the information. An agency may not conduct or sponsor, and a person is not required to respond to, a collection of information unless it displays a currently valid OMB control number. Send comments on the Agency's need for this information, the accuracy of the provided burden estimates, and any suggested methods for minimizing respondent burden, including the use of automated collection techniques to Director, Collection Strategies Division, U.S. Environmental Protection Agency (2822), 1200 Pennsylvania Ave., NW., Washington, D.C. 20460. Include the OMB control number in any correspondence. Do not send the completed forms to this address.

AS-BUILT COREHOLE 364

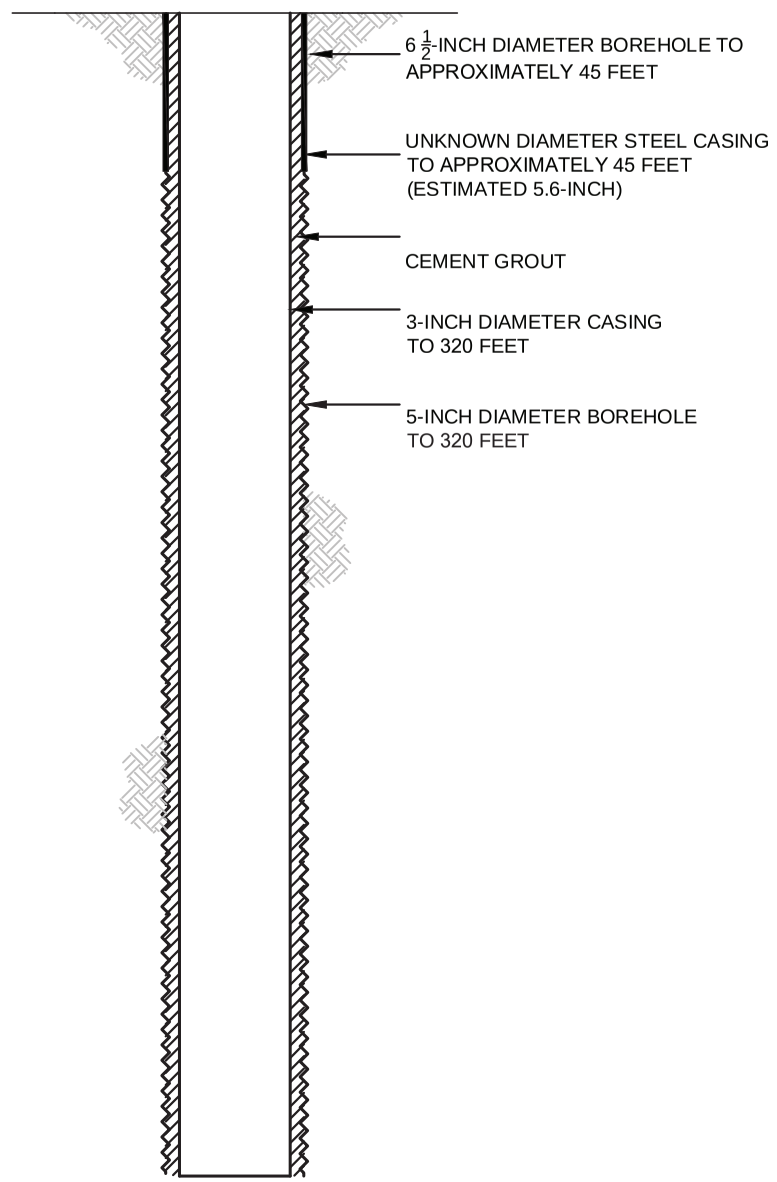

PROPOSED PLUGGING AND ABANDONMENT COREHOLE 364

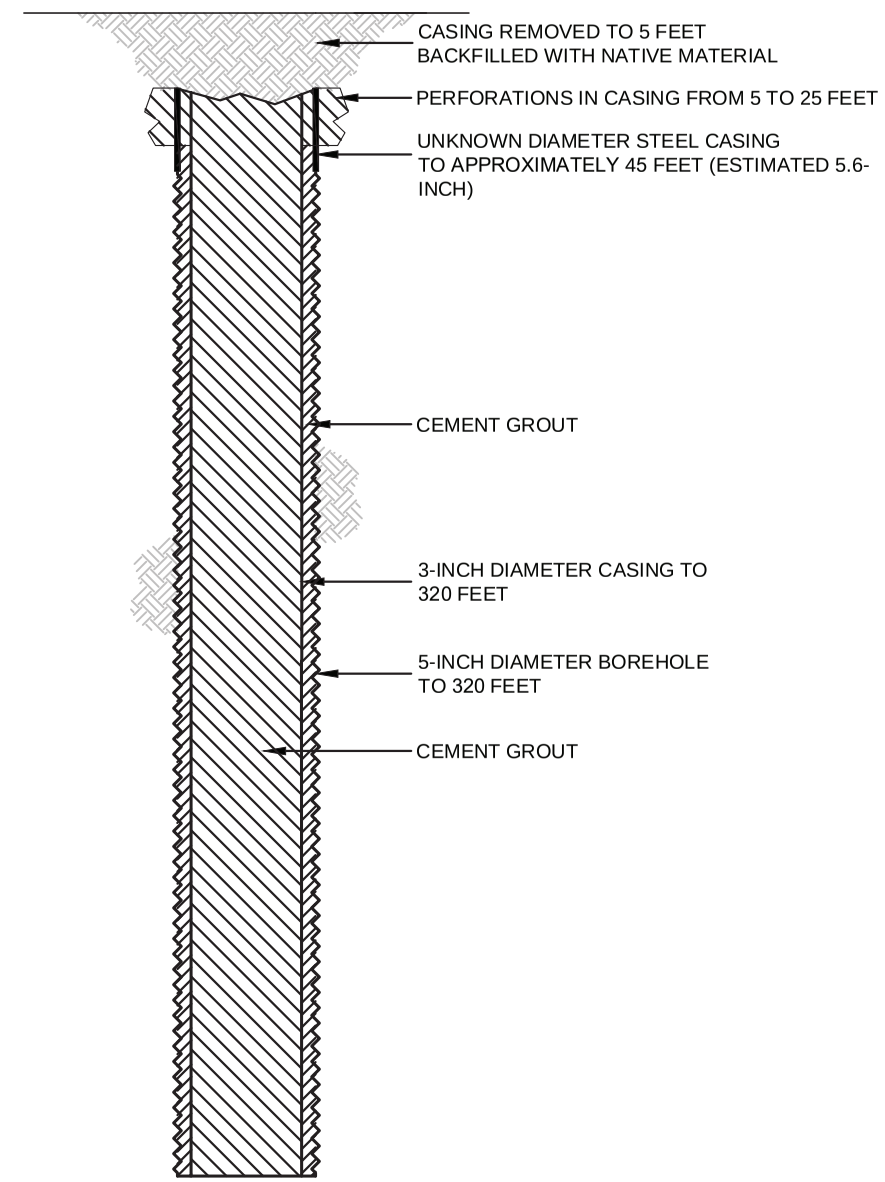

HALEY ALDRICH

FLORENCE COPPER, INC.
FLORENCE, ARIZONA

COREHOLE 364 DIAGRAM

FLORENCE COPPER INC.

NOT TO SCALE
SEPTEMBER 2019

FIGURE 1

MOBINI, GITA Printed: 4/21/2017 12:13 PM Layout: ABANDON (2)
G:\PROJECTS\CURIS RESOURCES\38706-CURIS FEASIBILITY\DRAWINGS\EPA\WELL\ABANDON\448S_ABANDON.DWG

OMB No. 2040-0042 Approval Expires 4/30/2022

United States Environmental Protection Agency

WELL REWORK RECORD, PLUGGING AND ABANDONMENT PLAN, OR PLUGGING AND ABANDONMENT AFFIDAVIT

Name and Address, Phone Number and/or Email of Permittee

Florence Copper Project
1575 W Hunt Hwy,
Florence, AZ 85132

Permit or EPA ID Number	API Number	Full Well Name
R9UIC-AZ3-FY11-1		365S

State	County
Arizona	Pinal

Locate well in two directions from nearest lines of quarter section and drilling unit

Latitude 33.05152159

Longitude -111.4260675

Surface Location

NW **1/4 of** SE **1/4 of Section** 28 **Township** 4S **Range** 9E

_____ **ft. from (N/S)** _____ **Line of quarter section**

_____ **ft. from (E/W)** _____ **Line of quarter section.**

Well Class	Timing of Action (pick one)	Type of Action (pick one)
☐ Class I ☐ Class II ☑ Class III ☐ Class V	☑ Notice Prior to Work Date Expected to Commence March 2021 ☐ Report After Work Date Work Ended	☐ Well Rework ☑ Plugging and Abandonment ☐ Conversion to a Non-Injection Well

Provide a narrative description of the work planned to be performed, or that was performed. Use additional pages as necessary. See instructions.

A workover rig capable of performing the required abandonment operations at the required depths will be moved in and set up over the core hole. The core hole will be inspected to determine the depth to which the hole remains open and if any obstructions are present in the core hole; the presence and condition of any existing collar will also be documented. If necessary, the core hole will be cleaned out to a depth of at least 100 feet below the bedrock-LBFU contact to enable placement of cement seals.

If collar is present, an attempt will be made to remove it. If removal of the collar is not feasible, it will be left in the hole and perforated as needed to allow an annular seal to be placed to a depth of at least 25 feet bgs. In areas of agricultural use, the surface casing will be cut at least 5 feet bgs and removed.

If the collar cannot be removed, it will be perforated from at least 20 feet below the bedrock-LBFU contact to at least 20 feet above the contact; from at least 20 feet below the base of the MFGU to at least 20 feet above the top of the MFGU; and from at least 25 feet bgs to 5 feet bgs.

A tremie pipe will be used to place Type V cement in the open core hole from the bottom of the core hole to the top of the core hole. Cement retainers, as described above, will be used to force cement grout into the annulus and behind perforated intervals, as necessary.

If the hole has been obstructed, as much cement as possible will be placed from 100 feet below the LBFU-bedrock contact to the top of the core hole.

The volume of Type V cement will be recorded and will not be less than the estimated volume of material required to fill each interval. All cement grout will consist of Type V cement, or equivalent approved in accordance with the UIC Permit.

Certification

I certify under the penalty of law that I have personally examined and am familiar with the information submitted in this document and all attachments and that, based on my inquiry of those individuals immediately responsible for obtaining the information, I believe that the information is true, accurate, and complete. I am aware that there are significant penalties for submitting false information, including the possibliity of fine and imprisonment. (Ref. 40 CFR § 144.32)

Name and Official Title *(Please type or print)*	Signature	Date Signed
Dan Johnson, VP - General Manager		10/3/2019

INSTRUCTIONS FOR FORM 7520-19

This form replaces forms 7520-12 and 7520-14. Use this form only when work is planned or has occurred that affects the well's construction or operation as an injection well, including work on the casing, tubing or packer (or for shallow Class V wells, the subsurface fluid emplacement network). Use one form per injection well. While reports or other information developed by contractors or service companies may be attached, this form must be signed by a responsible entity as described at 40 CFR 144.32. Note: operators closing Class V wells should use Form 7520-17.

NAME, ADDRESS, PHONE AND/OR EMAIL OF PERMITTEE: Enter the name and street address, city/town, state, and ZIP code of the permittee. Also provide an email address (if available) and/or a phone number.

PERMIT OR EPA ID NUMBER: Enter the well identification number or permit number assigned to the well by the EPA or the permitting authority.

API NUMBER: Enter the number assigned by the local jurisdiction (usually a State Oil and Gas Agency) using the American Petroleum Institute standard numbering system.

FULL WELL NAME: Enter the full name of the well or project.

Enter the **STATE** and **COUNTY** where the well is located. For States that do not have counties, use the name of that State's equivalent jurisdiction at a more local level.

WELL LOCATION: Fill in the complete township, range, and section to the nearest quarter-quarter section. A township is north or south of the baseline, and a range is east or west of the principal meridian (e.g., T12N, R34W). Also include the distance, in feet, from the nearest north or south line and nearest east or west line of the quarter-section. Also, enter the **latitude** and **longitude** of the well in decimal degrees, to five or six places if possible; be sure to include a negative sign for the longitude of a well in the Western Hemisphere and a negative sign for the latitude of a well in the Southern Hemisphere.

Enter the **WELL CLASS,** i.e., the class of injection well as defined in 40 CFR 144.6.

TIMING OF THE ACTION: Check ***Notice prior to work*** if the activity has not yet occurred (i.e., is planned). Check ***Report after work*** if the activity described has already occurred. As appropriate, include the date the activity is expected to start or the date the activity was completed. (Note this may not be available, e.g., for a plugging plan submitted with a permit application.)

TYPE OF ACTION: Check the appropriate box to describe the kind of activity being reported. Check ***Well Rework*** for work that was/will be performed on the well after it has already been in operation as an injection well. Check ***Plugging and Abandonment*** to report on plans for or descriptions of final closure/plugging after use as an injection well. Check ***Conversion to a Non-Injection Well*** if the well is to be converted to something other than an injection well.

Provide a **NARRATIVE DESCRIPTION** of the work planned to be performed, or that was performed. The narrative should include a description of the main procedures planned or that occurred during the work activity. A service company report, daily report, or similar document may be attached if it includes all the requested information and is clear and legible.

For well reworks, include the following information: The reason for the well rework; depths of activity; type of activity; changes to injection well configuration, well casing, or cement behind casing; any plug added to the well and its depth; any newly drilled interval and its depth; method(s) to demonstrate that the well has mechanical integrity (as applicable); and any deviations from the approved rework plan (as applicable).

For a well plugging plan, include the following information: Reason for the well plugging; number of plugs placed, and their depths; materials used as plugs (e.g., cast iron bridge plug, cement, cement retainer); method to set plugs; and wait-on-cement times, if any. Also provide one or more cost estimates from an independent firm in the business of plugging and abandoning wells to plug the well as described in the plan.

For well plugging affidavit, include the following information: Reason for the well plugging; number of plugs placed, and their depths; materials used as plugs (e.g., cast iron bridge plug, cement, cement retainer); method to set plugs; wait-on-cement times, if any; and any deviations from the approved plugging plan (if applicable).

For conversion to a non-injection well, include the following information: Depths of activity; type of activity; changes to injection well configuration, well casing, or cement behind casing; any plug added to the well and its depth; any newly drilled interval and its depth; depths of new perforations; and method(s) to demonstrate that the well has mechanical integrity (as applicable).

For all of the above activities, include a well sketch depicting the work, results of well tests/logging performed, service company tickets, and any other available information demonstrating how the work was/is to be performed. Also, specify whether depths are below ground surface, relative to Kelly bushing, etc.

CERTIFICATION: This form must be signed and dated by either: a responsible corporate officer for a corporation, by a general partner for a partnership, by the proprietor of a sole proprietorship, or by a principal executive or ranking elected official for a public agency.

PAPERWORK REDUCTION ACT NOTICE: The public reporting and recordkeeping burden for this collection of information is estimated to average between 6.0 and 7.9 hours per response, depending on the injection well class. Burden means the total time, effort, or financial resource expended by persons to generate, maintain, retain, or disclose or provide information to or for a Federal Agency. This includes the time needed to review instructions; develop, acquire, install, and utilize technology and systems for the purposes of collecting, validating, and verifying information, processing and maintaining information, and disclosing and providing information; adjust the existing ways to comply with any previously applicable instructions and requirements; train personnel to be able to respond to the collection of information; search data sources; complete and review the collection of information; and, transmit or otherwise disclose the information. An agency may not conduct or sponsor, and a person is not required to respond to, a collection of information unless it displays a currently valid OMB control number. Send comments on the Agency's need for this information, the accuracy of the provided burden estimates, and any suggested methods for minimizing respondent burden, including the use of automated collection techniques to Director, Collection Strategies Division, U.S. Environmental Protection Agency (2822), 1200 Pennsylvania Ave., NW., Washington, D.C. 20460. Include the OMB control number in any correspondence. Do not send the completed forms to this address.

AS-BUILT COREHOLE 365S

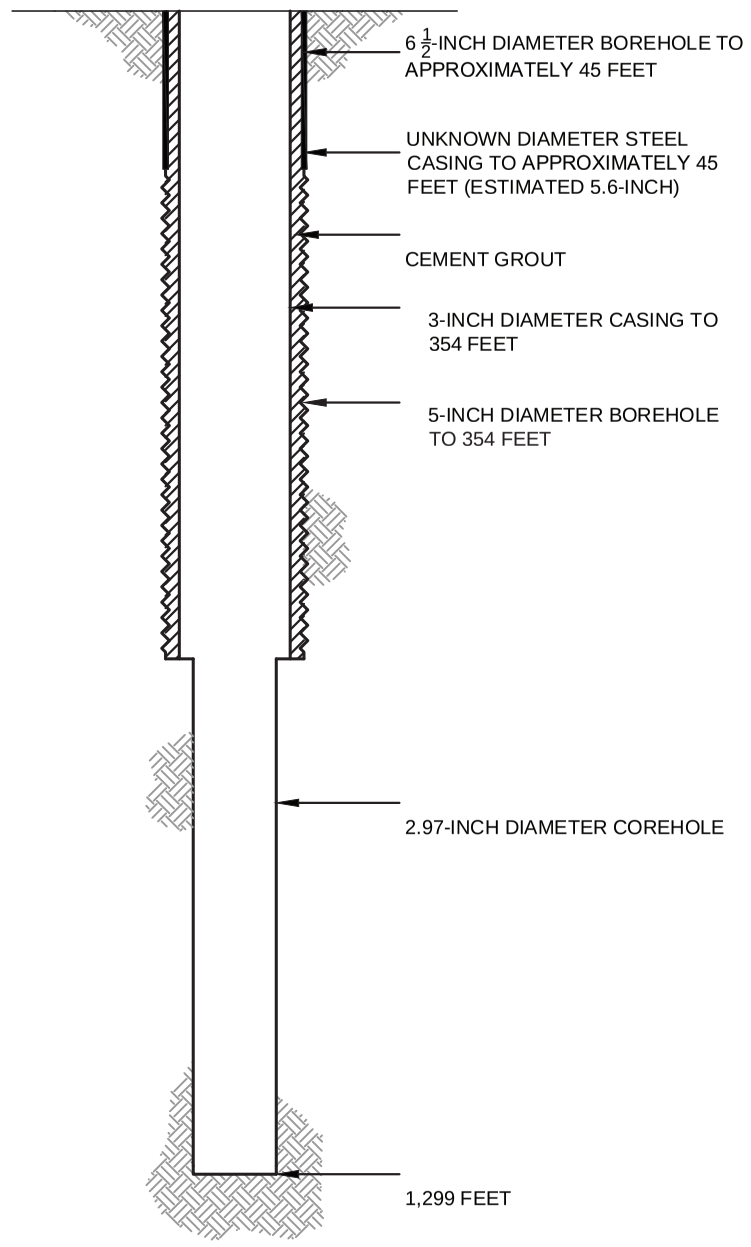

PROPOSED PLUGGING AND ABANDONMENT COREHOLE 365S

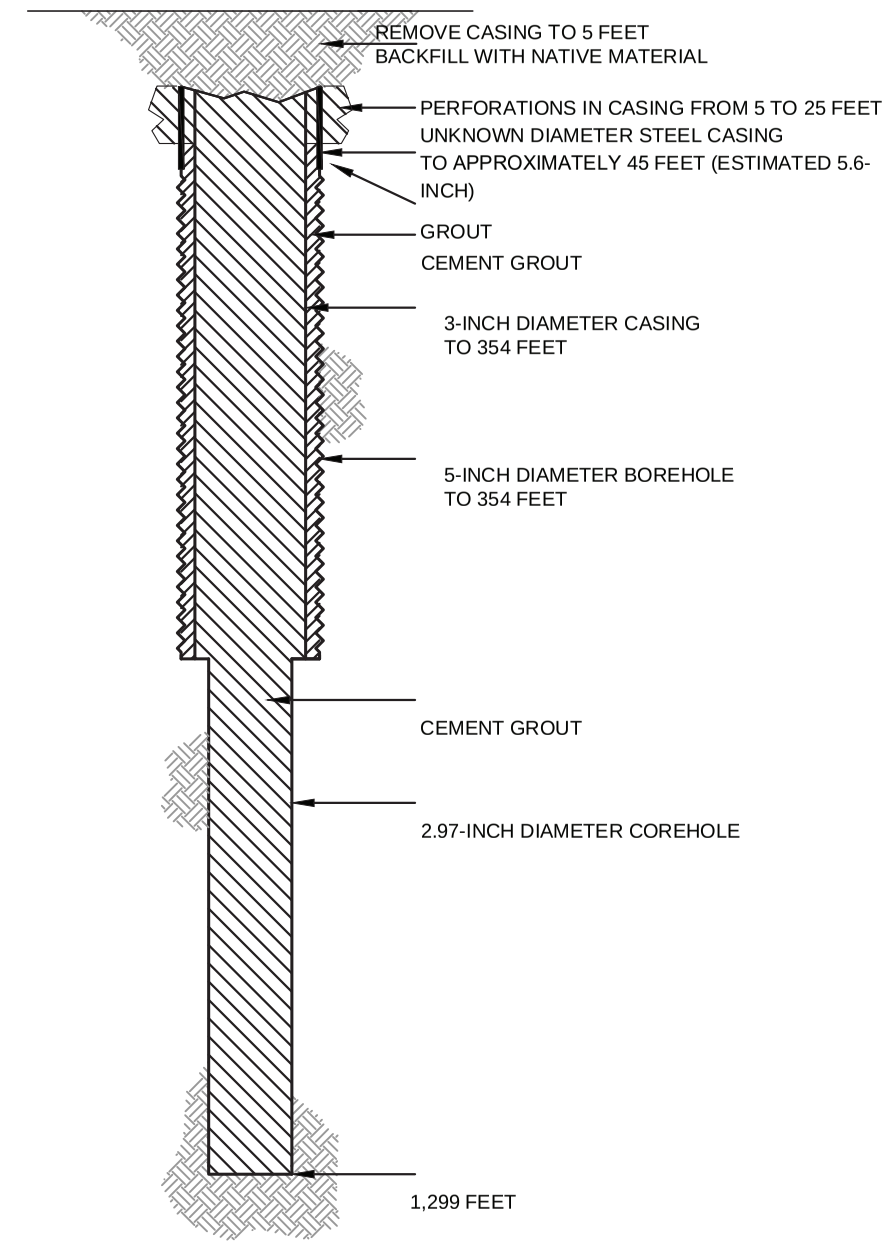

HALEY ALDRICH

FLORENCE COPPER, INC.
FLORENCE, ARIZONA

COREHOLE 365S DIAGRAM

FLORENCE COPPER INC.

NOT TO SCALE
SEPTEMBER 2019

FIGURE 1

MOBINI, GITA Printed: 4/21/2017 12:00 PM Layout: ABANDON (2)
\PROJECTS\CURIS RESOURCES38706-CURIS FEASIBILITY\DRAWINGS\EPA\WELL ABANDON\415S_ABANDON.DWG

OMB No. 2040-0042 Approval Expires 4/30/2022

United States Environmental Protection Agency

EPA

WELL REWORK RECORD, PLUGGING AND ABANDONMENT PLAN, OR PLUGGING AND ABANDONMENT AFFIDAVIT

Name and Address, Phone Number and/or Email of Permittee

Florence Copper Project
1575 W Hunt Hwy,
Florence, AZ 85132

Permit or EPA ID Number	API Number	Full Well Name
R9UIC-AZ3-FY11-1		370S

State	County
Arizona	Pinal

Locate well in two directions from nearest lines of quarter section and drilling unit

Latitude 33.05034744

Longitude -111.4301535

Surface Location

NE **1/4 of** SW **1/4 of Section** 28 **Township** 4S **Range** 9E

_____ **ft. from (N/S)** _____ **Line of quarter section**

_____ **ft. from (E/W)** _____ **Line of quarter section.**

Well Class	Timing of Action (pick one)	Type of Action (pick one)
☐ Class I ☐ Class II ☑ Class III ☐ Class V	☑ Notice Prior to Work Date Expected to Commence March 2021 ☐ Report After Work Date Work Ended	☐ Well Rework ☑ Plugging and Abandonment ☐ Conversion to a Non-Injection Well

Provide a narrative description of the work planned to be performed, or that was performed. Use additional pages as necessary. See instructions.

A workover rig capable of performing the required abandonment operations at the required depths will be moved in and set up over the core hole. The core hole will be inspected to determine the depth to which the hole remains open and if any obstructions are present in the core hole; the presence and condition of any existing collar will also be documented. If necessary, the core hole will be cleaned out to a depth of at least 100 feet below the bedrock-LBFU contact to enable placement of cement seals.

If collar is present, an attempt will be made to remove it. If removal of the collar is not feasible, it will be left in the hole and perforated as needed to allow an annular seal to be placed to a depth of at least 25 feet bgs. In areas of agricultural use, the surface casing will be cut at least 5 feet bgs and removed.

If the collar cannot be removed, it will be perforated from at least 20 feet below the bedrock-LBFU contact to at least 20 feet above the contact; from at least 20 feet below the base of the MFGU to at least 20 feet above the top of the MFGU; and from at least 25 feet bgs to 5 feet bgs.

A tremie pipe will be used to place Type V cement in the open core hole from the bottom of the core hole to the top of the core hole. Cement retainers, as described above, will be used to force cement grout into the annulus and behind perforated intervals, as necessary.

If the hole has been obstructed, as much cement as possible will be placed from 100 feet below the LBFU-bedrock contact to the top of the core hole.

The volume of Type V cement will be recorded and will not be less than the estimated volume of material required to fill each interval. All cement grout will consist of Type V cement, or equivalent approved in accordance with the UIC Permit.

Certification

I certify under the penalty of law that I have personally examined and am familiar with the information submitted in this document and all attachments and that, based on my inquiry of those individuals immediately responsible for obtaining the information, I believe that the information is true, accurate, and complete. I am aware that there are significant penalties for submitting false information, including the possibliity of fine and imprisonment. (Ref. 40 CFR § 144.32)

Name and Official Title *(Please type or print)*	Signature	Date Signed
Dan Johnson, VP - General Manager		10/3/2019

INSTRUCTIONS FOR FORM 7520-19

This form replaces forms 7520-12 and 7520-14. Use this form only when work is planned or has occurred that affects the well's construction or operation as an injection well, including work on the casing, tubing or packer (or for shallow Class V wells, the subsurface fluid emplacement network). Use one form per injection well. While reports or other information developed by contractors or service companies may be attached, this form must be signed by a responsible entity as described at 40 CFR 144.32. Note: operators closing Class V wells should use Form 7520-17.

NAME, ADDRESS, PHONE AND/OR EMAIL OF PERMITTEE: Enter the name and street address, city/town, state, and ZIP code of the permittee. Also provide an email address (if available) and/or a phone number.

PERMIT OR EPA ID NUMBER: Enter the well identification number or permit number assigned to the well by the EPA or the permitting authority.

API NUMBER: Enter the number assigned by the local jurisdiction (usually a State Oil and Gas Agency) using the American Petroleum Institute standard numbering system.

FULL WELL NAME: Enter the full name of the well or project.

Enter the **STATE** and **COUNTY** where the well is located. For States that do not have counties, use the name of that State's equivalent jurisdiction at a more local level.

WELL LOCATION: Fill in the complete township, range, and section to the nearest quarter-quarter section. A township is north or south of the baseline, and a range is east or west of the principal meridian (e.g., T12N, R34W). Also include the distance, in feet, from the nearest north or south line and nearest east or west line of the quarter-section. Also, enter the **latitude** and **longitude** of the well in decimal degrees, to five or six places if possible; be sure to include a negative sign for the longitude of a well in the Western Hemisphere and a negative sign for the latitude of a well in the Southern Hemisphere.

Enter the **WELL CLASS,** i.e., the class of injection well as defined in 40 CFR 144.6.

TIMING OF THE ACTION: Check ***Notice prior to work*** if the activity has not yet occurred (i.e., is planned). Check ***Report after work*** if the activity described has already occurred. As appropriate, include the date the activity is expected to start or the date the activity was completed. (Note this may not be available, e.g., for a plugging plan submitted with a permit application.)

TYPE OF ACTION: Check the appropriate box to describe the kind of activity being reported. Check ***Well Rework*** for work that was/will be performed on the well after it has already been in operation as an injection well. Check ***Plugging and Abandonment*** to report on plans for or descriptions of final closure/plugging after use as an injection well. Check ***Conversion to a Non-Injection Well*** if the well is to be converted to something other than an injection well.

Provide a **NARRATIVE DESCRIPTION** of the work planned to be performed, or that was performed. The narrative should include a description of the main procedures planned or that occurred during the work activity. A service company report, daily report, or similar document may be attached if it includes all the requested information and is clear and legible.

For well reworks, include the following information: The reason for the well rework; depths of activity; type of activity; changes to injection well configuration, well casing, or cement behind casing; any plug added to the well and its depth; any newly drilled interval and its depth; method(s) to demonstrate that the well has mechanical integrity (as applicable); and any deviations from the approved rework plan (as applicable).

For a well plugging plan, include the following information: Reason for the well plugging; number of plugs placed, and their depths; materials used as plugs (e.g., cast iron bridge plug, cement, cement retainer); method to set plugs; and wait-on-cement times, if any. Also provide one or more cost estimates from an independent firm in the business of plugging and abandoning wells to plug the well as described in the plan.

For well plugging affidavit, include the following information: Reason for the well plugging; number of plugs placed, and their depths; materials used as plugs (e.g., cast iron bridge plug, cement, cement retainer); method to set plugs; wait-on-cement times, if any; and any deviations from the approved plugging plan (if applicable).

For conversion to a non-injection well, include the following information: Depths of activity; type of activity; changes to injection well configuration, well casing, or cement behind casing; any plug added to the well and its depth; any newly drilled interval and its depth; depths of new perforations; and method(s) to demonstrate that the well has mechanical integrity (as applicable).

For all of the above activities, include a well sketch depicting the work, results of well tests/logging performed, service company tickets, and any other available information demonstrating how the work was/is to be performed. Also, specify whether depths are below ground surface, relative to Kelly bushing, etc.

CERTIFICATION: This form must be signed and dated by either: a responsible corporate officer for a corporation, by a general partner for a partnership, by the proprietor of a sole proprietorship, or by a principal executive or ranking elected official for a public agency.

PAPERWORK REDUCTION ACT NOTICE: The public reporting and recordkeeping burden for this collection of information is estimated to average between 6.0 and 7.9 hours per response, depending on the injection well class. Burden means the total time, effort, or financial resource expended by persons to generate, maintain, retain, or disclose or provide information to or for a Federal Agency. This includes the time needed to review instructions; develop, acquire, install, and utilize technology and systems for the purposes of collecting, validating, and verifying information, processing and maintaining information, and disclosing and providing information; adjust the existing ways to comply with any previously applicable instructions and requirements; train personnel to be able to respond to the collection of information; search data sources; complete and review the collection of information; and, transmit or otherwise disclose the information. An agency may not conduct or sponsor, and a person is not required to respond to, a collection of information unless it displays a currently valid OMB control number. Send comments on the Agency's need for this information, the accuracy of the provided burden estimates, and any suggested methods for minimizing respondent burden, including the use of automated collection techniques to Director, Collection Strategies Division, U.S. Environmental Protection Agency (2822), 1200 Pennsylvania Ave., NW., Washington, D.C. 20460. Include the OMB control number in any correspondence. Do not send the completed forms to this address.

AS-BUILT COREHOLE 370S

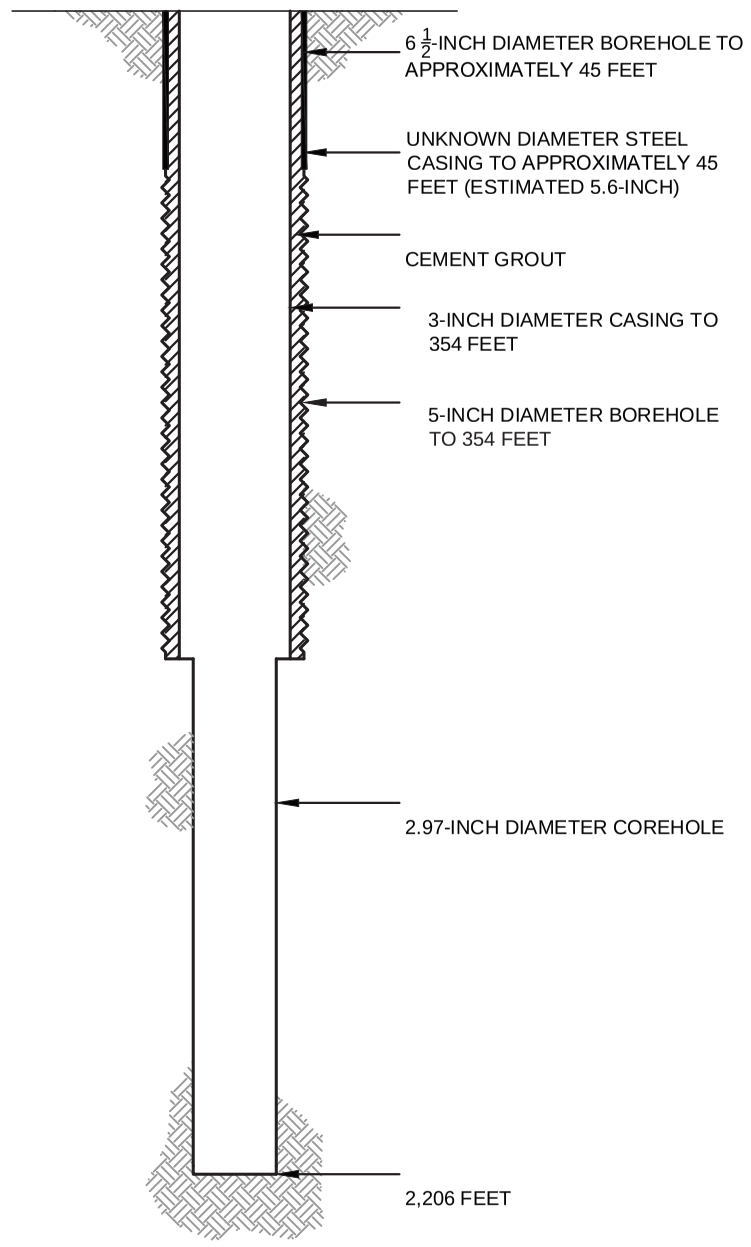

PROPOSED PLUGGING AND ABANDONMENT COREHOLE 370S

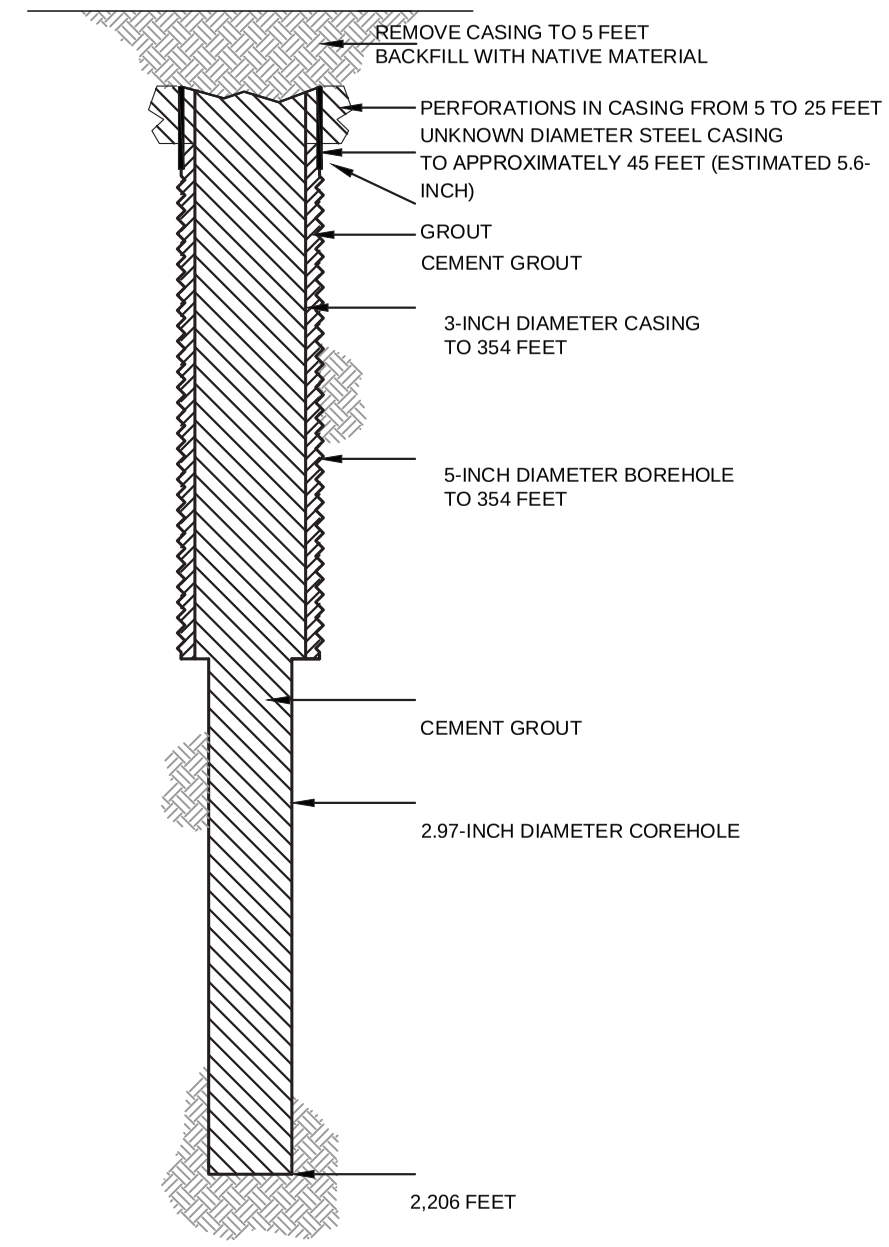

HALEY ALDRICH

FLORENCE COPPER, INC.
FLORENCE, ARIZONA

COREHOLE 370S DIAGRAM

FLORENCE COPPER INC.

NOT TO SCALE
SEPTEMBER 2019

FIGURE 1

MOBINI, GITA Printed: 4/21/2017 12:00 PM Layout: ABANDON (2)
\PROJECTS\CURIS RESOURCES38706-CURIS FEASIBILITY\DRAWINGS\EPA\WELL ABANDON\415S_ABANDON.DWG

OMB No. 2040-0042 Approval Expires 4/30/2022

United States Environmental Protection Agency

WELL REWORK RECORD, PLUGGING AND ABANDONMENT PLAN, OR PLUGGING AND ABANDONMENT AFFIDAVIT

Name and Address, Phone Number and/or Email of Permittee

Florence Copper Project
1575 W Hunt Hwy,
Florence, AZ 85132

Permit or EPA ID Number	API Number	Full Well Name
R9UIC-AZ3-FY11-1		371S

State	County
Arizona	Pinal

Locate well in two directions from nearest lines of quarter section and drilling unit

Latitude 33.04975079

Longitude -111.4297488

Surface Location

NW **1/4 of** SE **1/4 of Section** 28 **Township** 4S **Range** 9E

_____ **ft. from (N/S)** _____ **Line of quarter section**

_____ **ft. from (E/W)** _____ **Line of quarter section.**

Well Class	Timing of Action (pick one)	Type of Action (pick one)
☐ Class I ☐ Class II ☑ Class III ☐ Class V	☑ Notice Prior to Work Date Expected to Commence March 2021 ☐ Report After Work Date Work Ended	☐ Well Rework ☑ Plugging and Abandonment ☐ Conversion to a Non-Injection Well

Provide a narrative description of the work planned to be performed, or that was performed. Use additional pages as necessary. See instructions.

A workover rig capable of performing the required abandonment operations at the required depths will be moved in and set up over the core hole. The core hole will be inspected to determine the depth to which the hole remains open and if any obstructions are present in the core hole; the presence and condition of any existing collar will also be documented. If necessary, the core hole will be cleaned out to a depth of at least 100 feet below the bedrock-LBFU contact to enable placement of cement seals.

If collar is present, an attempt will be made to remove it. If removal of the collar is not feasible, it will be left in the hole and perforated as needed to allow an annular seal to be placed to a depth of at least 25 feet bgs. In areas of agricultural use, the surface casing will be cut at least 5 feet bgs and removed.

If the collar cannot be removed, it will be perforated from at least 20 feet below the bedrock-LBFU contact to at least 20 feet above the contact; from at least 20 feet below the base of the MFGU to at least 20 feet above the top of the MFGU; and from at least 25 feet bgs to 5 feet bgs.

A tremie pipe will be used to place Type V cement in the open core hole from the bottom of the core hole to the top of the core hole. Cement retainers, as described above, will be used to force cement grout into the annulus and behind perforated intervals, as necessary.

If the hole has been obstructed, as much cement as possible will be placed from 100 feet below the LBFU-bedrock contact to the top of the core hole.

The volume of Type V cement will be recorded and will not be less than the estimated volume of material required to fill each interval. All cement grout will consist of Type V cement, or equivalent approved in accordance with the UIC Permit.

Certification

I certify under the penalty of law that I have personally examined and am familiar with the information submitted in this document and all attachments and that, based on my inquiry of those individuals immediately responsible for obtaining the information, I believe that the information is true, accurate, and complete. I am aware that there are significant penalties for submitting false information, including the possibliity of fine and imprisonment. (Ref. 40 CFR § 144.32)

Name and Official Title *(Please type or print)*	Signature	Date Signed
Dan Johnson, VP - General Manager		10/3/2019

INSTRUCTIONS FOR FORM 7520-19

This form replaces forms 7520-12 and 7520-14. Use this form only when work is planned or has occurred that affects the well's construction or operation as an injection well, including work on the casing, tubing or packer (or for shallow Class V wells, the subsurface fluid emplacement network). Use one form per injection well. While reports or other information developed by contractors or service companies may be attached, this form must be signed by a responsible entity as described at 40 CFR 144.32. Note: operators closing Class V wells should use Form 7520-17.

NAME, ADDRESS, PHONE AND/OR EMAIL OF PERMITTEE: Enter the name and street address, city/town, state, and ZIP code of the permittee. Also provide an email address (if available) and/or a phone number.

PERMIT OR EPA ID NUMBER: Enter the well identification number or permit number assigned to the well by the EPA or the permitting authority.

API NUMBER: Enter the number assigned by the local jurisdiction (usually a State Oil and Gas Agency) using the American Petroleum Institute standard numbering system.

FULL WELL NAME: Enter the full name of the well or project.

Enter the **STATE** and **COUNTY** where the well is located. For States that do not have counties, use the name of that State's equivalent jurisdiction at a more local level.

WELL LOCATION: Fill in the complete township, range, and section to the nearest quarter-quarter section. A township is north or south of the baseline, and a range is east or west of the principal meridian (e.g., T12N, R34W). Also include the distance, in feet, from the nearest north or south line and nearest east or west line of the quarter-section. Also, enter the **latitude** and **longitude** of the well in decimal degrees, to five or six places if possible; be sure to include a negative sign for the longitude of a well in the Western Hemisphere and a negative sign for the latitude of a well in the Southern Hemisphere.

Enter the **WELL CLASS,** i.e., the class of injection well as defined in 40 CFR 144.6.

TIMING OF THE ACTION: Check ***Notice prior to work*** if the activity has not yet occurred (i.e., is planned). Check ***Report after work*** if the activity described has already occurred. As appropriate, include the date the activity is expected to start or the date the activity was completed. (Note this may not be available, e.g., for a plugging plan submitted with a permit application.)

TYPE OF ACTION: Check the appropriate box to describe the kind of activity being reported. Check ***Well Rework*** for work that was/will be performed on the well after it has already been in operation as an injection well. Check ***Plugging and Abandonment*** to report on plans for or descriptions of final closure/plugging after use as an injection well. Check ***Conversion to a Non-Injection Well*** if the well is to be converted to something other than an injection well.

Provide a **NARRATIVE DESCRIPTION** of the work planned to be performed, or that was performed. The narrative should include a description of the main procedures planned or that occurred during the work activity. A service company report, daily report, or similar document may be attached if it includes all the requested information and is clear and legible.

For well reworks, include the following information: The reason for the well rework; depths of activity; type of activity; changes to injection well configuration, well casing, or cement behind casing; any plug added to the well and its depth; any newly drilled interval and its depth; method(s) to demonstrate that the well has mechanical integrity (as applicable); and any deviations from the approved rework plan (as applicable).

For a well plugging plan, include the following information: Reason for the well plugging; number of plugs placed, and their depths; materials used as plugs (e.g., cast iron bridge plug, cement, cement retainer); method to set plugs; and wait-on-cement times, if any. Also provide one or more cost estimates from an independent firm in the business of plugging and abandoning wells to plug the well as described in the plan.

For well plugging affidavit, include the following information: Reason for the well plugging; number of plugs placed, and their depths; materials used as plugs (e.g., cast iron bridge plug, cement, cement retainer); method to set plugs; wait-on-cement times, if any; and any deviations from the approved plugging plan (if applicable).

For conversion to a non-injection well, include the following information: Depths of activity; type of activity; changes to injection well configuration, well casing, or cement behind casing; any plug added to the well and its depth; any newly drilled interval and its depth; depths of new perforations; and method(s) to demonstrate that the well has mechanical integrity (as applicable).

For all of the above activities, include a well sketch depicting the work, results of well tests/logging performed, service company tickets, and any other available information demonstrating how the work was/is to be performed. Also, specify whether depths are below ground surface, relative to Kelly bushing, etc.

CERTIFICATION: This form must be signed and dated by either: a responsible corporate officer for a corporation, by a general partner for a partnership, by the proprietor of a sole proprietorship, or by a principal executive or ranking elected official for a public agency.

PAPERWORK REDUCTION ACT NOTICE: The public reporting and recordkeeping burden for this collection of information is estimated to average between 6.0 and 7.9 hours per response, depending on the injection well class. Burden means the total time, effort, or financial resource expended by persons to generate, maintain, retain, or disclose or provide information to or for a Federal Agency. This includes the time needed to review instructions; develop, acquire, install, and utilize technology and systems for the purposes of collecting, validating, and verifying information, processing and maintaining information, and disclosing and providing information; adjust the existing ways to comply with any previously applicable instructions and requirements; train personnel to be able to respond to the collection of information; search data sources; complete and review the collection of information; and, transmit or otherwise disclose the information. An agency may not conduct or sponsor, and a person is not required to respond to, a collection of information unless it displays a currently valid OMB control number. Send comments on the Agency's need for this information, the accuracy of the provided burden estimates, and any suggested methods for minimizing respondent burden, including the use of automated collection techniques to Director, Collection Strategies Division, U.S. Environmental Protection Agency (2822), 1200 Pennsylvania Ave., NW., Washington, D.C. 20460. Include the OMB control number in any correspondence. Do not send the completed forms to this address.

AS-BUILT COREHOLE 371S

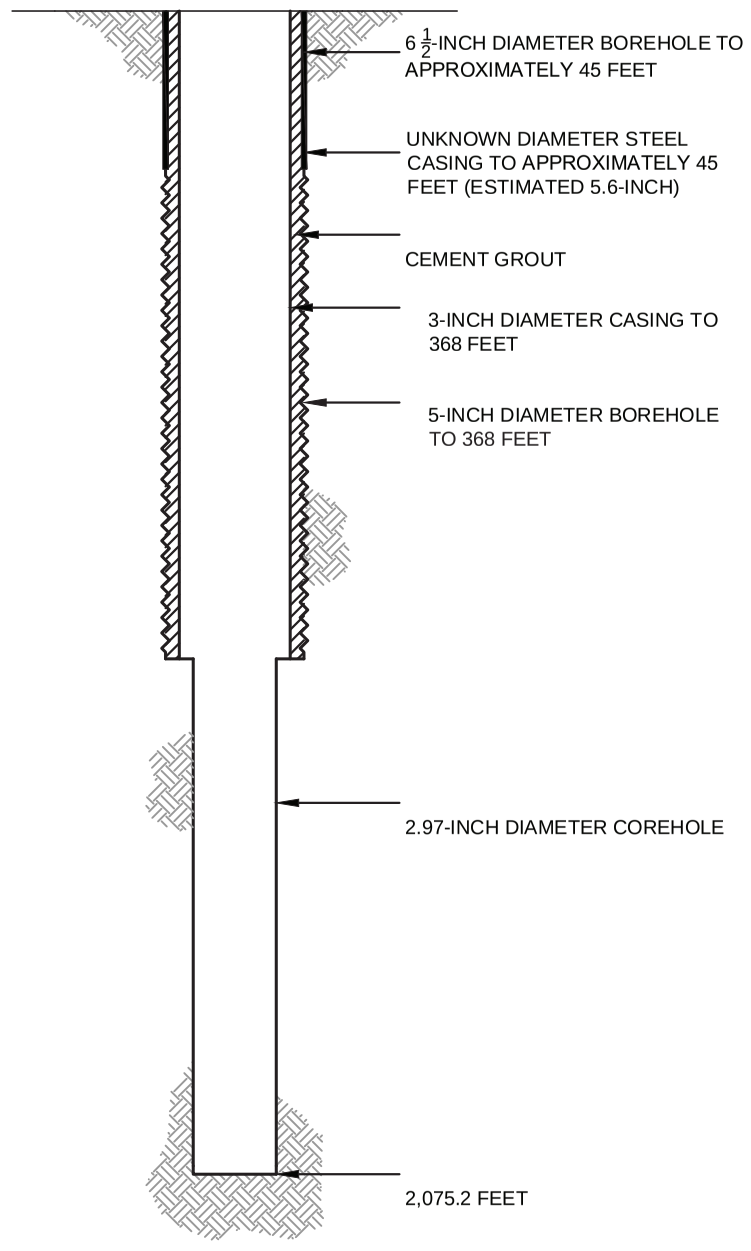

PROPOSED PLUGGING AND ABANDONMENT COREHOLE 371S

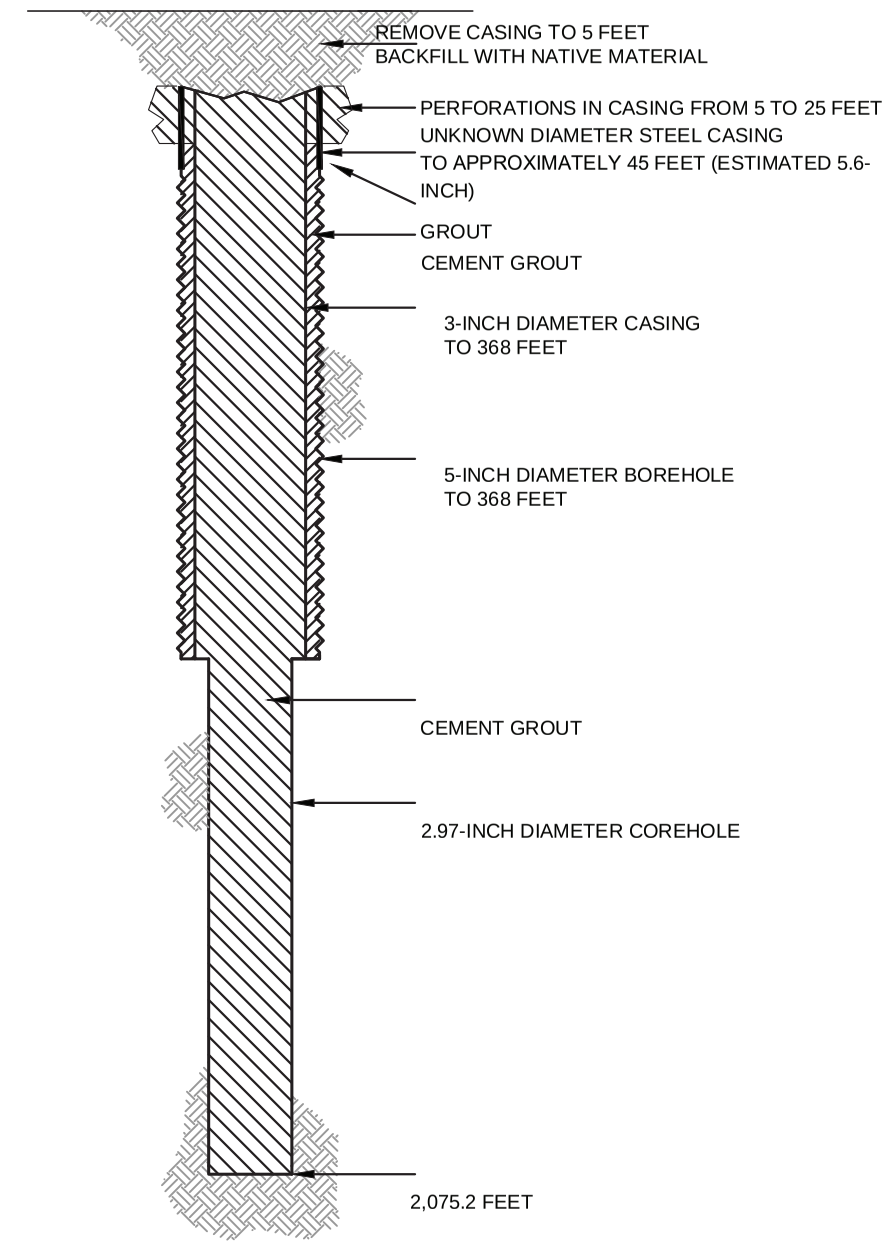

HALEY ALDRICH

FLORENCE COPPER, INC.
FLORENCE, ARIZONA

COREHOLE 371S DIAGRAM

FLORENCE COPPER INC.

NOT TO SCALE
SEPTEMBER 2019

FIGURE 1

MOBINI, GITA Printed: 4/21/2017 12:00 PM Layout: ABANDON (2)
\PROJECTS\CURIS RESOURCES38706-CURIS FEASIBILITY\DRAWINGS\EPA\WELL ABANDON\415S_ABANDON.DWG

OMB No. 2040-0042 Approval Expires 4/30/2022

United States Environmental Protection Agency

WELL REWORK RECORD, PLUGGING AND ABANDONMENT PLAN, OR PLUGGING AND ABANDONMENT AFFIDAVIT

Name and Address, Phone Number and/or Email of Permittee

Florence Copper Project
1575 W Hunt Hwy,
Florence, AZ 85132

Permit or EPA ID Number	API Number	Full Well Name
R9UIC-AZ3-FY11-1		372S

State	County
Arizona	Pinal

Locate well in two directions from nearest lines of quarter section and drilling unit

Latitude 33.0504533

Longitude -111.4261619

Surface Location

NW **1/4 of** SE **1/4 of Section** 28 **Township** 4S **Range** 9E

_____ **ft. from (N/S)** _____ **Line of quarter section**

_____ **ft. from (E/W)** _____ **Line of quarter section.**

Well Class	Timing of Action (pick one)	Type of Action (pick one)
☐ Class I ☐ Class II ☑ Class III ☐ Class V	☑ Notice Prior to Work Date Expected to Commence March 2021 ☐ Report After Work Date Work Ended	☐ Well Rework ☑ Plugging and Abandonment ☐ Conversion to a Non-Injection Well

Provide a narrative description of the work planned to be performed, or that was performed. Use additional pages as necessary. See instructions.

A workover rig capable of performing the required abandonment operations at the required depths will be moved in and set up over the core hole. The core hole will be inspected to determine the depth to which the hole remains open and if any obstructions are present in the core hole; the presence and condition of any existing collar will also be documented. If necessary, the core hole will be cleaned out to a depth of at least 100 feet below the bedrock-LBFU contact to enable placement of cement seals.

If collar is present, an attempt will be made to remove it. If removal of the collar is not feasible, it will be left in the hole and perforated as needed to allow an annular seal to be placed to a depth of at least 25 feet bgs. In areas of agricultural use, the surface casing will be cut at least 5 feet bgs and removed.

If the collar cannot be removed, it will be perforated from at least 20 feet below the bedrock-LBFU contact to at least 20 feet above the contact; from at least 20 feet below the base of the MFGU to at least 20 feet above the top of the MFGU; and from at least 25 feet bgs to 5 feet bgs.

A tremie pipe will be used to place Type V cement in the open core hole from the bottom of the core hole to the top of the core hole. Cement retainers, as described above, will be used to force cement grout into the annulus and behind perforated intervals, as necessary.

If the hole has been obstructed, as much cement as possible will be placed from 100 feet below the LBFU-bedrock contact to the top of the core hole.

The volume of Type V cement will be recorded and will not be less than the estimated volume of material required to fill each interval. All cement grout will consist of Type V cement, or equivalent approved in accordance with the UIC Permit.

Certification

I certify under the penalty of law that I have personally examined and am familiar with the information submitted in this document and all attachments and that, based on my inquiry of those individuals immediately responsible for obtaining the information, I believe that the information is true, accurate, and complete. I am aware that there are significant penalties for submitting false information, including the possibliity of fine and imprisonment. (Ref. 40 CFR § 144.32)

Name and Official Title *(Please type or print)*	Signature	Date Signed
Dan Johnson, VP - General Manager		10/3/2019

INSTRUCTIONS FOR FORM 7520-19

This form replaces forms 7520-12 and 7520-14. Use this form only when work is planned or has occurred that affects the well's construction or operation as an injection well, including work on the casing, tubing or packer (or for shallow Class V wells, the subsurface fluid emplacement network). Use one form per injection well. While reports or other information developed by contractors or service companies may be attached, this form must be signed by a responsible entity as described at 40 CFR 144.32. Note: operators closing Class V wells should use Form 7520-17.

NAME, ADDRESS, PHONE AND/OR EMAIL OF PERMITTEE: Enter the name and street address, city/town, state, and ZIP code of the permittee. Also provide an email address (if available) and/or a phone number.

PERMIT OR EPA ID NUMBER: Enter the well identification number or permit number assigned to the well by the EPA or the permitting authority.

API NUMBER: Enter the number assigned by the local jurisdiction (usually a State Oil and Gas Agency) using the American Petroleum Institute standard numbering system.

FULL WELL NAME: Enter the full name of the well or project.

Enter the **STATE** and **COUNTY** where the well is located. For States that do not have counties, use the name of that State's equivalent jurisdiction at a more local level.

WELL LOCATION: Fill in the complete township, range, and section to the nearest quarter-quarter section. A township is north or south of the baseline, and a range is east or west of the principal meridian (e.g., T12N, R34W). Also include the distance, in feet, from the nearest north or south line and nearest east or west line of the quarter-section. Also, enter the **latitude** and **longitude** of the well in decimal degrees, to five or six places if possible; be sure to include a negative sign for the longitude of a well in the Western Hemisphere and a negative sign for the latitude of a well in the Southern Hemisphere.

Enter the **WELL CLASS,** i.e., the class of injection well as defined in 40 CFR 144.6.

TIMING OF THE ACTION: Check ***Notice prior to work*** if the activity has not yet occurred (i.e., is planned). Check ***Report after work*** if the activity described has already occurred. As appropriate, include the date the activity is expected to start or the date the activity was completed. (Note this may not be available, e.g., for a plugging plan submitted with a permit application.)

TYPE OF ACTION: Check the appropriate box to describe the kind of activity being reported. Check ***Well Rework*** for work that was/will be performed on the well after it has already been in operation as an injection well. Check ***Plugging and Abandonment*** to report on plans for or descriptions of final closure/plugging after use as an injection well. Check ***Conversion to a Non-Injection Well*** if the well is to be converted to something other than an injection well.

Provide a **NARRATIVE DESCRIPTION** of the work planned to be performed, or that was performed. The narrative should include a description of the main procedures planned or that occurred during the work activity. A service company report, daily report, or similar document may be attached if it includes all the requested information and is clear and legible.

For well reworks, include the following information: The reason for the well rework; depths of activity; type of activity; changes to injection well configuration, well casing, or cement behind casing; any plug added to the well and its depth; any newly drilled interval and its depth; method(s) to demonstrate that the well has mechanical integrity (as applicable); and any deviations from the approved rework plan (as applicable).

For a well plugging plan, include the following information: Reason for the well plugging; number of plugs placed, and their depths; materials used as plugs (e.g., cast iron bridge plug, cement, cement retainer); method to set plugs; and wait-on-cement times, if any. Also provide one or more cost estimates from an independent firm in the business of plugging and abandoning wells to plug the well as described in the plan.

For well plugging affidavit, include the following information: Reason for the well plugging; number of plugs placed, and their depths; materials used as plugs (e.g., cast iron bridge plug, cement, cement retainer); method to set plugs; wait-on-cement times, if any; and any deviations from the approved plugging plan (if applicable).

For conversion to a non-injection well, include the following information: Depths of activity; type of activity; changes to injection well configuration, well casing, or cement behind casing; any plug added to the well and its depth; any newly drilled interval and its depth; depths of new perforations; and method(s) to demonstrate that the well has mechanical integrity (as applicable).

For all of the above activities, include a well sketch depicting the work, results of well tests/logging performed, service company tickets, and any other available information demonstrating how the work was/is to be performed. Also, specify whether depths are below ground surface, relative to Kelly bushing, etc.

CERTIFICATION: This form must be signed and dated by either: a responsible corporate officer for a corporation, by a general partner for a partnership, by the proprietor of a sole proprietorship, or by a principal executive or ranking elected official for a public agency.

PAPERWORK REDUCTION ACT NOTICE: The public reporting and recordkeeping burden for this collection of information is estimated to average between 6.0 and 7.9 hours per response, depending on the injection well class. Burden means the total time, effort, or financial resource expended by persons to generate, maintain, retain, or disclose or provide information to or for a Federal Agency. This includes the time needed to review instructions; develop, acquire, install, and utilize technology and systems for the purposes of collecting, validating, and verifying information, processing and maintaining information, and disclosing and providing information; adjust the existing ways to comply with any previously applicable instructions and requirements; train personnel to be able to respond to the collection of information; search data sources; complete and review the collection of information; and, transmit or otherwise disclose the information. An agency may not conduct or sponsor, and a person is not required to respond to, a collection of information unless it displays a currently valid OMB control number. Send comments on the Agency's need for this information, the accuracy of the provided burden estimates, and any suggested methods for minimizing respondent burden, including the use of automated collection techniques to Director, Collection Strategies Division, U.S. Environmental Protection Agency (2822), 1200 Pennsylvania Ave., NW., Washington, D.C. 20460. Include the OMB control number in any correspondence. Do not send the completed forms to this address.

AS-BUILT COREHOLE 372S

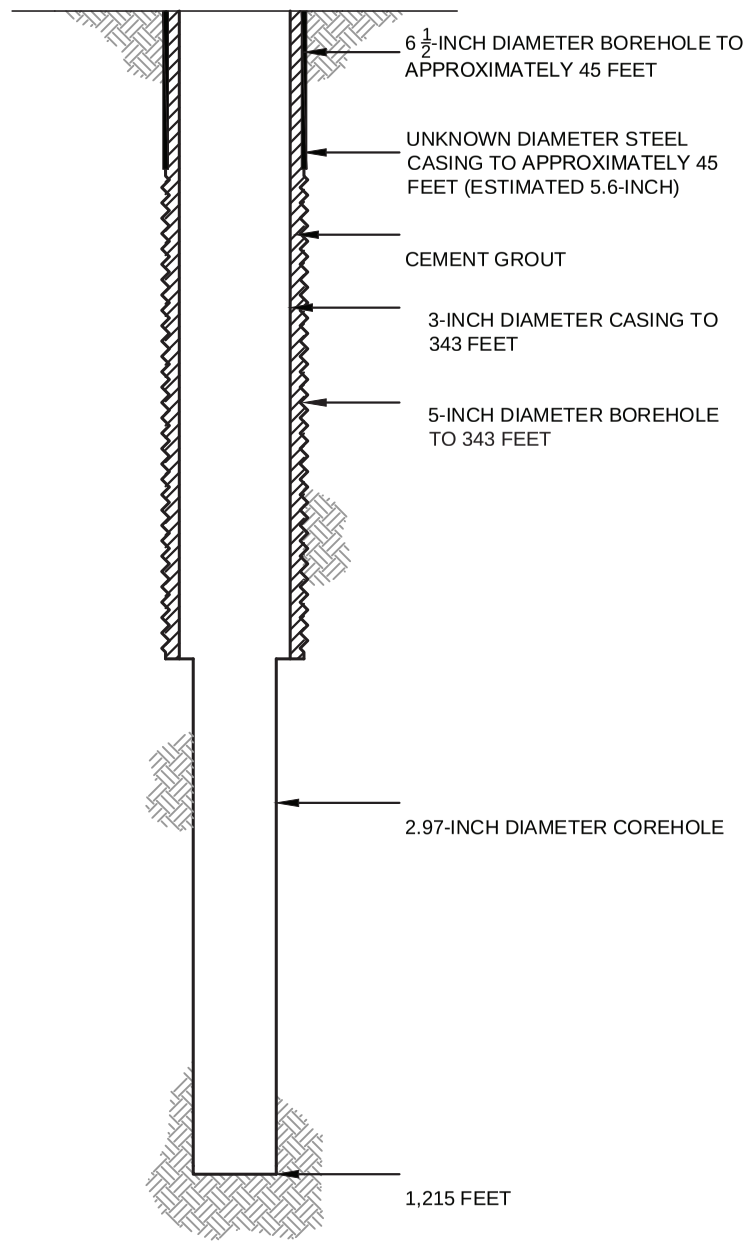

PROPOSED PLUGGING AND ABANDONMENT COREHOLE 372S

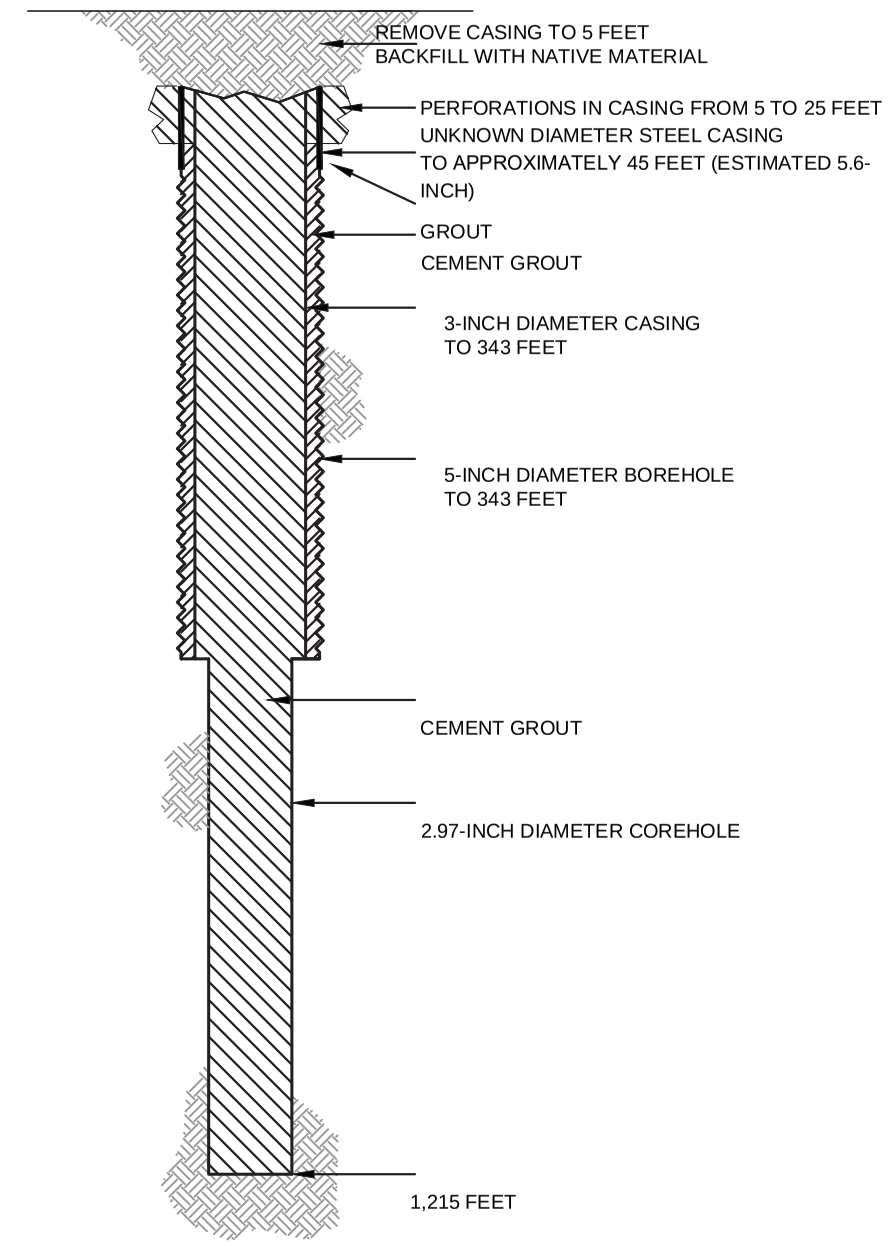

HALEY ALDRICH

FLORENCE COPPER, INC.
FLORENCE, ARIZONA

COREHOLE 372S DIAGRAM

FLORENCE COPPER INC.

NOT TO SCALE
SEPTEMBER 2019

FIGURE 1

MOBINI, GITA Printed: 4/21/2017 12:00 PM Layout: ABANDON (2)
\PROJECTS\CURIS RESOURCES38706-CURIS FEASIBILITY\DRAWINGS\EPA\WELL ABANDON\415S_ABANDON.DWG

OMB No. 2040-0042 Approval Expires 4/30/2022

United States Environmental Protection Agency

WELL REWORK RECORD, PLUGGING AND ABANDONMENT PLAN, OR PLUGGING AND ABANDONMENT AFFIDAVIT

Name and Address, Phone Number and/or Email of Permittee

Florence Copper Project
1575 W Hunt Hwy,
Florence, AZ 85132

Permit or EPA ID Number	API Number	Full Well Name
R9UIC-AZ3-FY11-1		373MF

State	County
Arizona	Pinal

Locate well in two directions from nearest lines of quarter section and drilling unit

Latitude 33.04915094

Longitude -111.4285283

Surface Location

SW **1/4 of** SE **1/4 of Section** 28 **Township** 4S **Range** 9E

_____ **ft. from (N/S)** _____ **Line of quarter section**

_____ **ft. from (E/W)** _____ **Line of quarter section.**

Well Class	Timing of Action (pick one)	Type of Action (pick one)
☐ Class I ☐ Class II ☑ Class III ☐ Class V	☑ Notice Prior to Work Date Expected to Commence March 2021 ☐ Report After Work Date Work Ended	☐ Well Rework ☑ Plugging and Abandonment ☐ Conversion to a Non-Injection Well

Provide a narrative description of the work planned to be performed, or that was performed. Use additional pages as necessary. See instructions.

A workover rig capable of performing the required abandonment operations at the required depths will be moved in and set up over the core hole. The core hole will be inspected to determine the depth to which the hole remains open and if any obstructions are present in the core hole; the presence and condition of any existing collar will also be documented. If necessary, the core hole will be cleaned out to a depth of at least 100 feet below the bedrock-LBFU contact to enable placement of cement seals.

If collar is present, an attempt will be made to remove it. If removal of the collar is not feasible, it will be left in the hole and perforated as needed to allow an annular seal to be placed to a depth of at least 25 feet bgs. In areas of agricultural use, the surface casing will be cut at least 5 feet bgs and removed.

If the collar cannot be removed, it will be perforated from at least 20 feet below the bedrock-LBFU contact to at least 20 feet above the contact; from at least 20 feet below the base of the MFGU to at least 20 feet above the top of the MFGU; and from at least 25 feet bgs to 5 feet bgs.

A tremie pipe will be used to place Type V cement in the open core hole from the bottom of the core hole to the top of the core hole. Cement retainers, as described above, will be used to force cement grout into the annulus and behind perforated intervals, as necessary.

If the hole has been obstructed, as much cement as possible will be placed from 100 feet below the LBFU-bedrock contact to the top of the core hole.

The volume of Type V cement will be recorded and will not be less than the estimated volume of material required to fill each interval. All cement grout will consist of Type V cement, or equivalent approved in accordance with the UIC Permit.

Certification

I certify under the penalty of law that I have personally examined and am familiar with the information submitted in this document and all attachments and that, based on my inquiry of those individuals immediately responsible for obtaining the information, I believe that the information is true, accurate, and complete. I am aware that there are significant penalties for submitting false information, including the possibliity of fine and imprisonment. (Ref. 40 CFR § 144.32)

Name and Official Title *(Please type or print)*	Signature	Date Signed
Dan Johnson, VP - General Manager		10/3/2019

INSTRUCTIONS FOR FORM 7520-19

This form replaces forms 7520-12 and 7520-14. Use this form only when work is planned or has occurred that affects the well's construction or operation as an injection well, including work on the casing, tubing or packer (or for shallow Class V wells, the subsurface fluid emplacement network). Use one form per injection well. While reports or other information developed by contractors or service companies may be attached, this form must be signed by a responsible entity as described at 40 CFR 144.32. Note: operators closing Class V wells should use Form 7520-17.

NAME, ADDRESS, PHONE AND/OR EMAIL OF PERMITTEE: Enter the name and street address, city/town, state, and ZIP code of the permittee. Also provide an email address (if available) and/or a phone number.

PERMIT OR EPA ID NUMBER: Enter the well identification number or permit number assigned to the well by the EPA or the permitting authority.

API NUMBER: Enter the number assigned by the local jurisdiction (usually a State Oil and Gas Agency) using the American Petroleum Institute standard numbering system.

FULL WELL NAME: Enter the full name of the well or project.

Enter the **STATE** and **COUNTY** where the well is located. For States that do not have counties, use the name of that State's equivalent jurisdiction at a more local level.

WELL LOCATION: Fill in the complete township, range, and section to the nearest quarter-quarter section. A township is north or south of the baseline, and a range is east or west of the principal meridian (e.g., T12N, R34W). Also include the distance, in feet, from the nearest north or south line and nearest east or west line of the quarter-section. Also, enter the **latitude** and **longitude** of the well in decimal degrees, to five or six places if possible; be sure to include a negative sign for the longitude of a well in the Western Hemisphere and a negative sign for the latitude of a well in the Southern Hemisphere.

Enter the **WELL CLASS,** i.e., the class of injection well as defined in 40 CFR 144.6.

TIMING OF THE ACTION: Check ***Notice prior to work*** if the activity has not yet occurred (i.e., is planned). Check ***Report after work*** if the activity described has already occurred. As appropriate, include the date the activity is expected to start or the date the activity was completed. (Note this may not be available, e.g., for a plugging plan submitted with a permit application.)

TYPE OF ACTION: Check the appropriate box to describe the kind of activity being reported. Check ***Well Rework*** for work that was/will be performed on the well after it has already been in operation as an injection well. Check ***Plugging and Abandonment*** to report on plans for or descriptions of final closure/plugging after use as an injection well. Check ***Conversion to a Non-Injection Well*** if the well is to be converted to something other than an injection well.

Provide a **NARRATIVE DESCRIPTION** of the work planned to be performed, or that was performed. The narrative should include a description of the main procedures planned or that occurred during the work activity. A service company report, daily report, or similar document may be attached if it includes all the requested information and is clear and legible.

For well reworks, include the following information: The reason for the well rework; depths of activity; type of activity; changes to injection well configuration, well casing, or cement behind casing; any plug added to the well and its depth; any newly drilled interval and its depth; method(s) to demonstrate that the well has mechanical integrity (as applicable); and any deviations from the approved rework plan (as applicable).

For a well plugging plan, include the following information: Reason for the well plugging; number of plugs placed, and their depths; materials used as plugs (e.g., cast iron bridge plug, cement, cement retainer); method to set plugs; and wait-on-cement times, if any. Also provide one or more cost estimates from an independent firm in the business of plugging and abandoning wells to plug the well as described in the plan.

For well plugging affidavit, include the following information: Reason for the well plugging; number of plugs placed, and their depths; materials used as plugs (e.g., cast iron bridge plug, cement, cement retainer); method to set plugs; wait-on-cement times, if any; and any deviations from the approved plugging plan (if applicable).

For conversion to a non-injection well, include the following information: Depths of activity; type of activity; changes to injection well configuration, well casing, or cement behind casing; any plug added to the well and its depth; any newly drilled interval and its depth; depths of new perforations; and method(s) to demonstrate that the well has mechanical integrity (as applicable).

For all of the above activities, include a well sketch depicting the work, results of well tests/logging performed, service company tickets, and any other available information demonstrating how the work was/is to be performed. Also, specify whether depths are below ground surface, relative to Kelly bushing, etc.

CERTIFICATION: This form must be signed and dated by either: a responsible corporate officer for a corporation, by a general partner for a partnership, by the proprietor of a sole proprietorship, or by a principal executive or ranking elected official for a public agency.

PAPERWORK REDUCTION ACT NOTICE: The public reporting and recordkeeping burden for this collection of information is estimated to average between 6.0 and 7.9 hours per response, depending on the injection well class. Burden means the total time, effort, or financial resource expended by persons to generate, maintain, retain, or disclose or provide information to or for a Federal Agency. This includes the time needed to review instructions; develop, acquire, install, and utilize technology and systems for the purposes of collecting, validating, and verifying information, processing and maintaining information, and disclosing and providing information; adjust the existing ways to comply with any previously applicable instructions and requirements; train personnel to be able to respond to the collection of information; search data sources; complete and review the collection of information; and, transmit or otherwise disclose the information. An agency may not conduct or sponsor, and a person is not required to respond to, a collection of information unless it displays a currently valid OMB control number. Send comments on the Agency's need for this information, the accuracy of the provided burden estimates, and any suggested methods for minimizing respondent burden, including the use of automated collection techniques to Director, Collection Strategies Division, U.S. Environmental Protection Agency (2822), 1200 Pennsylvania Ave., NW., Washington, D.C. 20460. Include the OMB control number in any correspondence. Do not send the completed forms to this address.

AS-BUILT COREHOLE 373MF

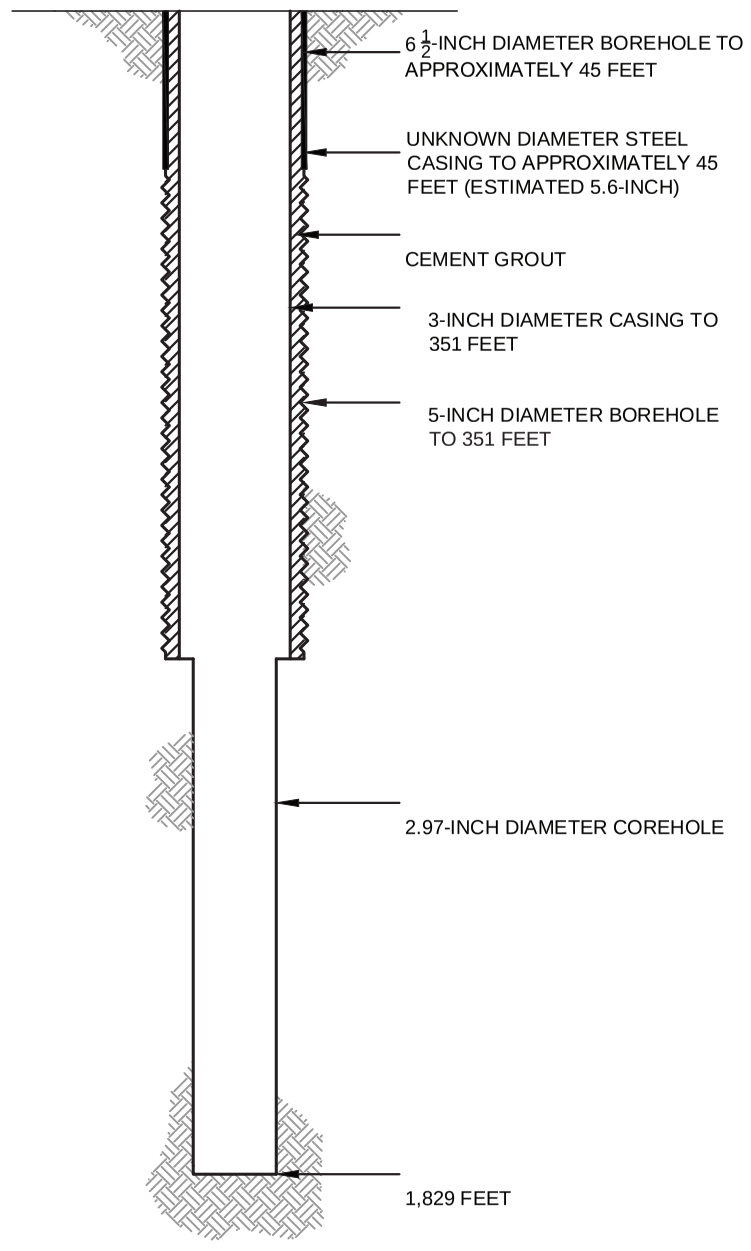

PROPOSED PLUGGING AND ABANDONMENT COREHOLE 373MF

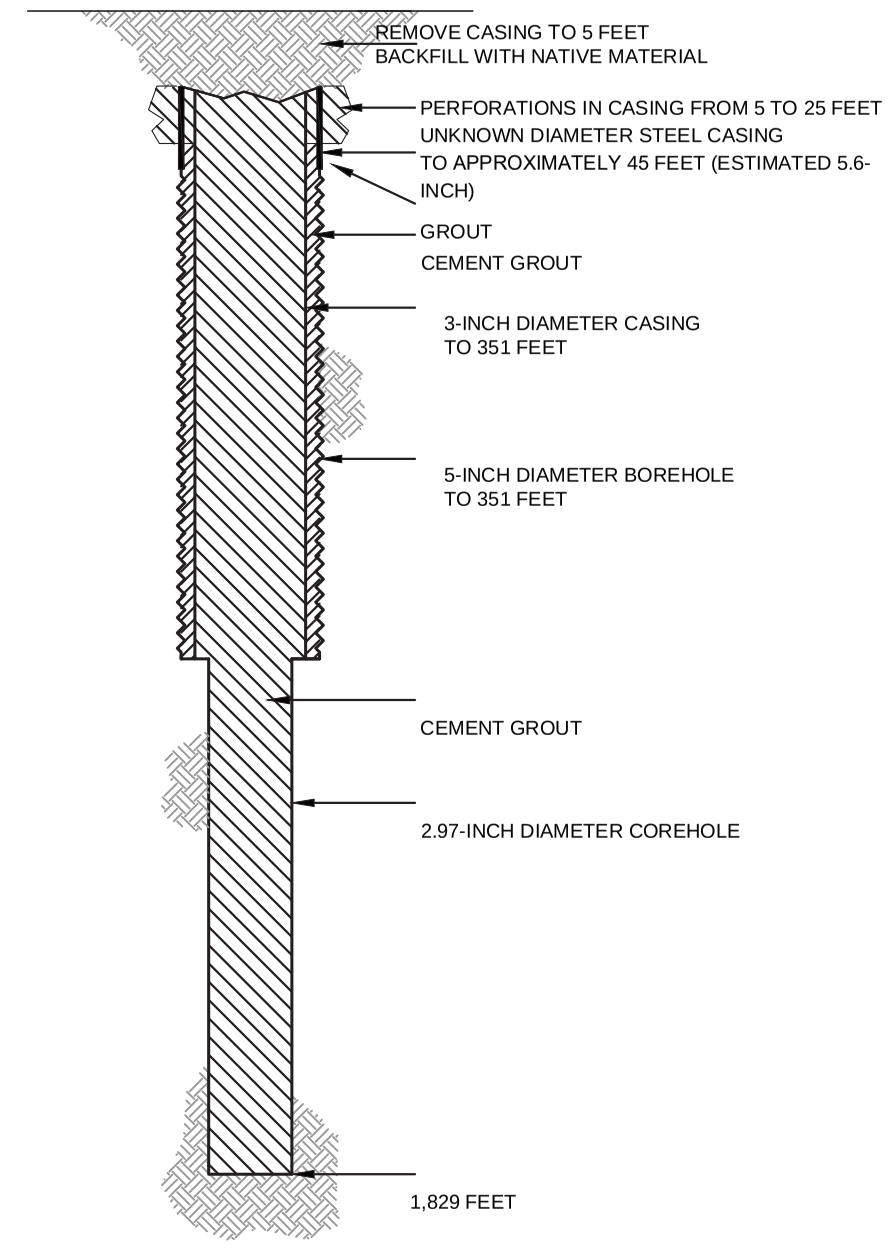

HALEY ALDRICH

FLORENCE COPPER, INC.
FLORENCE, ARIZONA

COREHOLE 373MF DIAGRAM

FLORENCE COPPER INC.

NOT TO SCALE
SEPTEMBER 2019

FIGURE 1

MOBINI, GITA Printed: 4/21/2017 12:00 PM Layout: ABANDON (2)
\PROJECTS\CURIS RESOURCES38706-CURIS FEASIBILITY\DRAWINGS\EPA\WELL ABANDON\415S_ABANDON.DWG

OMB No. 2040-0042 Approval Expires 4/30/2022

United States Environmental Protection Agency

WELL REWORK RECORD, PLUGGING AND ABANDONMENT PLAN, OR PLUGGING AND ABANDONMENT AFFIDAVIT

Name and Address, Phone Number and/or Email of Permittee

Florence Copper Project
1575 W Hunt Hwy,
Florence, AZ 85132

Permit or EPA ID Number	API Number	Full Well Name
R9UIC-AZ3-FY11-1		379MF

State	County
Arizona	Pinal

Locate well in two directions from nearest lines of quarter section and drilling unit

Latitude 33.04675467

Longitude -111.4244622

Surface Location

SE **1/4 of** SE **1/4 of Section** 28 **Township** 4S **Range** 9E

_____ **ft. from (N/S)** _____ **Line of quarter section**

_____ **ft. from (E/W)** _____ **Line of quarter section.**

Well Class	Timing of Action (pick one)	Type of Action (pick one)
☐ Class I ☐ Class II ☑ Class III ☐ Class V	☑ Notice Prior to Work Date Expected to Commence March 2021 ☐ Report After Work Date Work Ended	☐ Well Rework ☑ Plugging and Abandonment ☐ Conversion to a Non-Injection Well

Provide a narrative description of the work planned to be performed, or that was performed. Use additional pages as necessary. See instructions.

A workover rig capable of performing the required abandonment operations at the required depths will be moved in and set up over the core hole. The core hole will be inspected to determine the depth to which the hole remains open and if any obstructions are present in the core hole; the presence and condition of any existing collar will also be documented. If necessary, the core hole will be cleaned out to a depth of at least 100 feet below the bedrock-LBFU contact to enable placement of cement seals.

If collar is present, an attempt will be made to remove it. If removal of the collar is not feasible, it will be left in the hole and perforated as needed to allow an annular seal to be placed to a depth of at least 25 feet bgs. In areas of agricultural use, the surface casing will be cut at least 5 feet bgs and removed.

If the collar cannot be removed, it will be perforated from at least 20 feet below the bedrock-LBFU contact to at least 20 feet above the contact; from at least 20 feet below the base of the MFGU to at least 20 feet above the top of the MFGU; and from at least 25 feet bgs to 5 feet bgs.

A tremie pipe will be used to place Type V cement in the open core hole from the bottom of the core hole to the top of the core hole. Cement retainers, as described above, will be used to force cement grout into the annulus and behind perforated intervals, as necessary.

If the hole has been obstructed, as much cement as possible will be placed from 100 feet below the LBFU-bedrock contact to the top of the core hole.

The volume of Type V cement will be recorded and will not be less than the estimated volume of material required to fill each interval. All cement grout will consist of Type V cement, or equivalent approved in accordance with the UIC Permit.

Certification

I certify under the penalty of law that I have personally examined and am familiar with the information submitted in this document and all attachments and that, based on my inquiry of those individuals immediately responsible for obtaining the information, I believe that the information is true, accurate, and complete. I am aware that there are significant penalties for submitting false information, including the possibliity of fine and imprisonment. (Ref. 40 CFR § 144.32)

Name and Official Title *(Please type or print)*	Signature	Date Signed
Dan Johnson, VP - General Manager		10/3/2019

INSTRUCTIONS FOR FORM 7520-19

This form replaces forms 7520-12 and 7520-14. Use this form only when work is planned or has occurred that affects the well's construction or operation as an injection well, including work on the casing, tubing or packer (or for shallow Class V wells, the subsurface fluid emplacement network). Use one form per injection well. While reports or other information developed by contractors or service companies may be attached, this form must be signed by a responsible entity as described at 40 CFR 144.32. Note: operators closing Class V wells should use Form 7520-17.

NAME, ADDRESS, PHONE AND/OR EMAIL OF PERMITTEE: Enter the name and street address, city/town, state, and ZIP code of the permittee. Also provide an email address (if available) and/or a phone number.

PERMIT OR EPA ID NUMBER: Enter the well identification number or permit number assigned to the well by the EPA or the permitting authority.

API NUMBER: Enter the number assigned by the local jurisdiction (usually a State Oil and Gas Agency) using the American Petroleum Institute standard numbering system.

FULL WELL NAME: Enter the full name of the well or project.

Enter the **STATE** and **COUNTY** where the well is located. For States that do not have counties, use the name of that State's equivalent jurisdiction at a more local level.

WELL LOCATION: Fill in the complete township, range, and section to the nearest quarter-quarter section. A township is north or south of the baseline, and a range is east or west of the principal meridian (e.g., T12N, R34W). Also include the distance, in feet, from the nearest north or south line and nearest east or west line of the quarter-section. Also, enter the **latitude** and **longitude** of the well in decimal degrees, to five or six places if possible; be sure to include a negative sign for the longitude of a well in the Western Hemisphere and a negative sign for the latitude of a well in the Southern Hemisphere.

Enter the **WELL CLASS,** i.e., the class of injection well as defined in 40 CFR 144.6.

TIMING OF THE ACTION: Check ***Notice prior to work*** if the activity has not yet occurred (i.e., is planned). Check ***Report after work*** if the activity described has already occurred. As appropriate, include the date the activity is expected to start or the date the activity was completed. (Note this may not be available, e.g., for a plugging plan submitted with a permit application.)

TYPE OF ACTION: Check the appropriate box to describe the kind of activity being reported. Check ***Well Rework*** for work that was/will be performed on the well after it has already been in operation as an injection well. Check ***Plugging and Abandonment*** to report on plans for or descriptions of final closure/plugging after use as an injection well. Check ***Conversion to a Non-Injection Well*** if the well is to be converted to something other than an injection well.

Provide a **NARRATIVE DESCRIPTION** of the work planned to be performed, or that was performed. The narrative should include a description of the main procedures planned or that occurred during the work activity. A service company report, daily report, or similar document may be attached if it includes all the requested information and is clear and legible.

For well reworks, include the following information: The reason for the well rework; depths of activity; type of activity; changes to injection well configuration, well casing, or cement behind casing; any plug added to the well and its depth; any newly drilled interval and its depth; method(s) to demonstrate that the well has mechanical integrity (as applicable); and any deviations from the approved rework plan (as applicable).

For a well plugging plan, include the following information: Reason for the well plugging; number of plugs placed, and their depths; materials used as plugs (e.g., cast iron bridge plug, cement, cement retainer); method to set plugs; and wait-on-cement times, if any. Also provide one or more cost estimates from an independent firm in the business of plugging and abandoning wells to plug the well as described in the plan.

For well plugging affidavit, include the following information: Reason for the well plugging; number of plugs placed, and their depths; materials used as plugs (e.g., cast iron bridge plug, cement, cement retainer); method to set plugs; wait-on-cement times, if any; and any deviations from the approved plugging plan (if applicable).

For conversion to a non-injection well, include the following information: Depths of activity; type of activity; changes to injection well configuration, well casing, or cement behind casing; any plug added to the well and its depth; any newly drilled interval and its depth; depths of new perforations; and method(s) to demonstrate that the well has mechanical integrity (as applicable).

For all of the above activities, include a well sketch depicting the work, results of well tests/logging performed, service company tickets, and any other available information demonstrating how the work was/is to be performed. Also, specify whether depths are below ground surface, relative to Kelly bushing, etc.

CERTIFICATION: This form must be signed and dated by either: a responsible corporate officer for a corporation, by a general partner for a partnership, by the proprietor of a sole proprietorship, or by a principal executive or ranking elected official for a public agency.

PAPERWORK REDUCTION ACT NOTICE: The public reporting and recordkeeping burden for this collection of information is estimated to average between 6.0 and 7.9 hours per response, depending on the injection well class. Burden means the total time, effort, or financial resource expended by persons to generate, maintain, retain, or disclose or provide information to or for a Federal Agency. This includes the time needed to review instructions; develop, acquire, install, and utilize technology and systems for the purposes of collecting, validating, and verifying information, processing and maintaining information, and disclosing and providing information; adjust the existing ways to comply with any previously applicable instructions and requirements; train personnel to be able to respond to the collection of information; search data sources; complete and review the collection of information; and, transmit or otherwise disclose the information. An agency may not conduct or sponsor, and a person is not required to respond to, a collection of information unless it displays a currently valid OMB control number. Send comments on the Agency's need for this information, the accuracy of the provided burden estimates, and any suggested methods for minimizing respondent burden, including the use of automated collection techniques to Director, Collection Strategies Division, U.S. Environmental Protection Agency (2822), 1200 Pennsylvania Ave., NW., Washington, D.C. 20460. Include the OMB control number in any correspondence. Do not send the completed forms to this address.

AS-BUILT COREHOLE 379MF

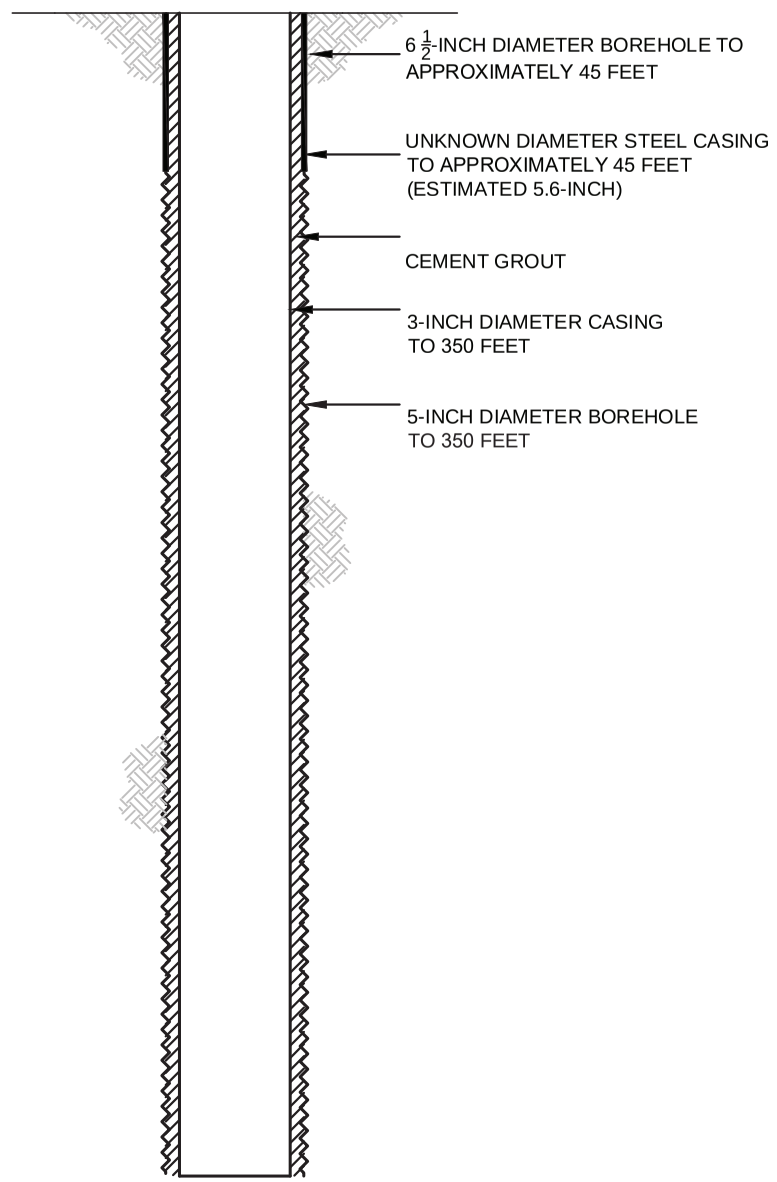

PROPOSED PLUGGING AND ABANDONMENT COREHOLE 379MF

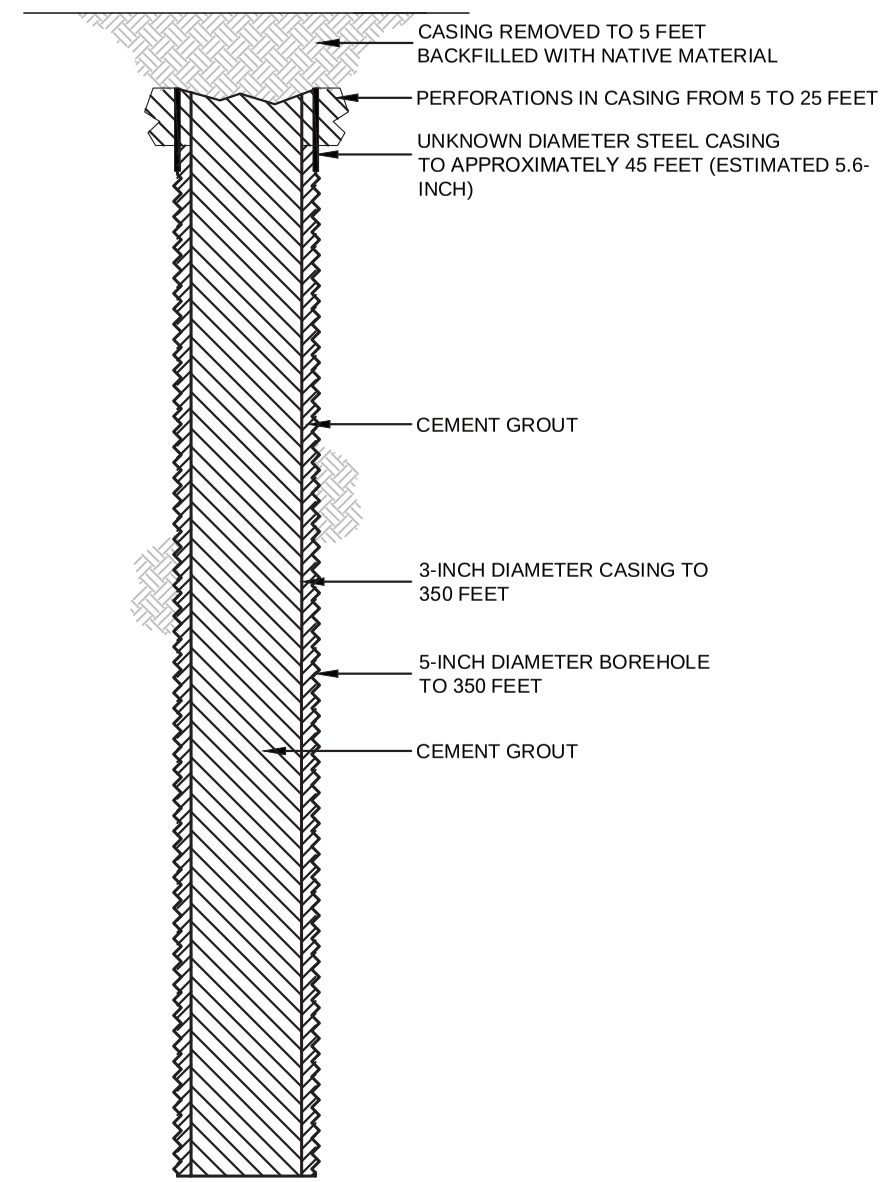

HALEY ALDRICH

FLORENCE COPPER, INC.
FLORENCE, ARIZONA

COREHOLE 379MF DIAGRAM

FLORENCE COPPER INC.

NOT TO SCALE
SEPTEMBER 2019

FIGURE 1

MOBINI, GITA Printed: 4/21/2017 12:13 PM Layout: ABANDON (2)
G:\PROJECTS\CURIS RESOURCES\38706-CURIS FEASIBILITY\DRAWINGS\EPA\WELL\ABANDON\448S_ABANDON.DWG

OMB No. 2040-0042 Approval Expires 4/30/2022

United States Environmental Protection Agency

EPA

WELL REWORK RECORD, PLUGGING AND ABANDONMENT PLAN, OR PLUGGING AND ABANDONMENT AFFIDAVIT

Name and Address, Phone Number and/or Email of Permittee

Florence Copper Project
1575 W Hunt Hwy,
Florence, AZ 85132

Permit or EPA ID Number	API Number	Full Well Name
R9UIC-AZ3-FY11-1		380MF

State	County
Arizona	Pinal

Locate well in two directions from nearest lines of quarter section and drilling unit

Surface Location

SE 1/4 of SE 1/4 of Section 28 Township 4S Range 9E

Latitude 33.04675788

Longitude -111.4252781

ft. from (N/S) Line of quarter section

ft. from (E/W) Line of quarter section.

Well Class	Timing of Action (pick one)	Type of Action (pick one)
☐ Class I ☐ Class II ☑ Class III ☐ Class V	☑ Notice Prior to Work Date Expected to Commence March 2021 ☐ Report After Work Date Work Ended	☐ Well Rework ☑ Plugging and Abandonment ☐ Conversion to a Non-Injection Well

Provide a narrative description of the work planned to be performed, or that was performed. Use additional pages as necessary. See instructions.

A workover rig capable of performing the required abandonment operations at the required depths will be moved in and set up over the core hole. The core hole will be inspected to determine the depth to which the hole remains open and if any obstructions are present in the core hole; the presence and condition of any existing collar will also be documented. If necessary, the core hole will be cleaned out to a depth of at least 100 feet below the bedrock-LBFU contact to enable placement of cement seals.

If collar is present, an attempt will be made to remove it. If removal of the collar is not feasible, it will be left in the hole and perforated as needed to allow an annular seal to be placed to a depth of at least 25 feet bgs. In areas of agricultural use, the surface casing will be cut at least 5 feet bgs and removed.

If the collar cannot be removed, it will be perforated from at least 20 feet below the bedrock-LBFU contact to at least 20 feet above the contact; from at least 20 feet below the base of the MFGU to at least 20 feet above the top of the MFGU; and from at least 25 feet bgs to 5 feet bgs.

A tremie pipe will be used to place Type V cement in the open core hole from the bottom of the core hole to the top of the core hole. Cement retainers, as described above, will be used to force cement grout into the annulus and behind perforated intervals, as necessary.

If the hole has been obstructed, as much cement as possible will be placed from 100 feet below the LBFU-bedrock contact to the top of the core hole.

The volume of Type V cement will be recorded and will not be less than the estimated volume of material required to fill each interval. All cement grout will consist of Type V cement, or equivalent approved in accordance with the UIC Permit.

Certification

I certify under the penalty of law that I have personally examined and am familiar with the information submitted in this document and all attachments and that, based on my inquiry of those individuals immediately responsible for obtaining the information, I believe that the information is true, accurate, and complete. I am aware that there are significant penalties for submitting false information, including the possibliity of fine and imprisonment. (Ref. 40 CFR § 144.32)

Name and Official Title *(Please type or print)*	Signature	Date Signed
Dan Johnson, VP - General Manager		10/3/2019

INSTRUCTIONS FOR FORM 7520-19

This form replaces forms 7520-12 and 7520-14. Use this form only when work is planned or has occurred that affects the well's construction or operation as an injection well, including work on the casing, tubing or packer (or for shallow Class V wells, the subsurface fluid emplacement network). Use one form per injection well. While reports or other information developed by contractors or service companies may be attached, this form must be signed by a responsible entity as described at 40 CFR 144.32. Note: operators closing Class V wells should use Form 7520-17.

NAME, ADDRESS, PHONE AND/OR EMAIL OF PERMITTEE: Enter the name and street address, city/town, state, and ZIP code of the permittee. Also provide an email address (if available) and/or a phone number.

PERMIT OR EPA ID NUMBER: Enter the well identification number or permit number assigned to the well by the EPA or the permitting authority.

API NUMBER: Enter the number assigned by the local jurisdiction (usually a State Oil and Gas Agency) using the American Petroleum Institute standard numbering system.

FULL WELL NAME: Enter the full name of the well or project.

Enter the **STATE** and **COUNTY** where the well is located. For States that do not have counties, use the name of that State's equivalent jurisdiction at a more local level.

WELL LOCATION: Fill in the complete township, range, and section to the nearest quarter-quarter section. A township is north or south of the baseline, and a range is east or west of the principal meridian (e.g., T12N, R34W). Also include the distance, in feet, from the nearest north or south line and nearest east or west line of the quarter-section. Also, enter the **latitude** and **longitude** of the well in decimal degrees, to five or six places if possible; be sure to include a negative sign for the longitude of a well in the Western Hemisphere and a negative sign for the latitude of a well in the Southern Hemisphere.

Enter the **WELL CLASS,** i.e., the class of injection well as defined in 40 CFR 144.6.

TIMING OF THE ACTION: Check ***Notice prior to work*** if the activity has not yet occurred (i.e., is planned). Check ***Report after work*** if the activity described has already occurred. As appropriate, include the date the activity is expected to start or the date the activity was completed. (Note this may not be available, e.g., for a plugging plan submitted with a permit application.)

TYPE OF ACTION: Check the appropriate box to describe the kind of activity being reported. Check ***Well Rework*** for work that was/will be performed on the well after it has already been in operation as an injection well. Check ***Plugging and Abandonment*** to report on plans for or descriptions of final closure/plugging after use as an injection well. Check ***Conversion to a Non-Injection Well*** if the well is to be converted to something other than an injection well.

Provide a **NARRATIVE DESCRIPTION** of the work planned to be performed, or that was performed. The narrative should include a description of the main procedures planned or that occurred during the work activity. A service company report, daily report, or similar document may be attached if it includes all the requested information and is clear and legible.

For well reworks, include the following information: The reason for the well rework; depths of activity; type of activity; changes to injection well configuration, well casing, or cement behind casing; any plug added to the well and its depth; any newly drilled interval and its depth; method(s) to demonstrate that the well has mechanical integrity (as applicable); and any deviations from the approved rework plan (as applicable).

For a well plugging plan, include the following information: Reason for the well plugging; number of plugs placed, and their depths; materials used as plugs (e.g., cast iron bridge plug, cement, cement retainer); method to set plugs; and wait-on-cement times, if any. Also provide one or more cost estimates from an independent firm in the business of plugging and abandoning wells to plug the well as described in the plan.

For well plugging affidavit, include the following information: Reason for the well plugging; number of plugs placed, and their depths; materials used as plugs (e.g., cast iron bridge plug, cement, cement retainer); method to set plugs; wait-on-cement times, if any; and any deviations from the approved plugging plan (if applicable).

For conversion to a non-injection well, include the following information: Depths of activity; type of activity; changes to injection well configuration, well casing, or cement behind casing; any plug added to the well and its depth; any newly drilled interval and its depth; depths of new perforations; and method(s) to demonstrate that the well has mechanical integrity (as applicable).

For all of the above activities, include a well sketch depicting the work, results of well tests/logging performed, service company tickets, and any other available information demonstrating how the work was/is to be performed. Also, specify whether depths are below ground surface, relative to Kelly bushing, etc.

CERTIFICATION: This form must be signed and dated by either: a responsible corporate officer for a corporation, by a general partner for a partnership, by the proprietor of a sole proprietorship, or by a principal executive or ranking elected official for a public agency.

PAPERWORK REDUCTION ACT NOTICE: The public reporting and recordkeeping burden for this collection of information is estimated to average between 6.0 and 7.9 hours per response, depending on the injection well class. Burden means the total time, effort, or financial resource expended by persons to generate, maintain, retain, or disclose or provide information to or for a Federal Agency. This includes the time needed to review instructions; develop, acquire, install, and utilize technology and systems for the purposes of collecting, validating, and verifying information, processing and maintaining information, and disclosing and providing information; adjust the existing ways to comply with any previously applicable instructions and requirements; train personnel to be able to respond to the collection of information; search data sources; complete and review the collection of information; and, transmit or otherwise disclose the information. An agency may not conduct or sponsor, and a person is not required to respond to, a collection of information unless it displays a currently valid OMB control number. Send comments on the Agency's need for this information, the accuracy of the provided burden estimates, and any suggested methods for minimizing respondent burden, including the use of automated collection techniques to Director, Collection Strategies Division, U.S. Environmental Protection Agency (2822), 1200 Pennsylvania Ave., NW., Washington, D.C. 20460. Include the OMB control number in any correspondence. Do not send the completed forms to this address.

AS-BUILT COREHOLE 380MF

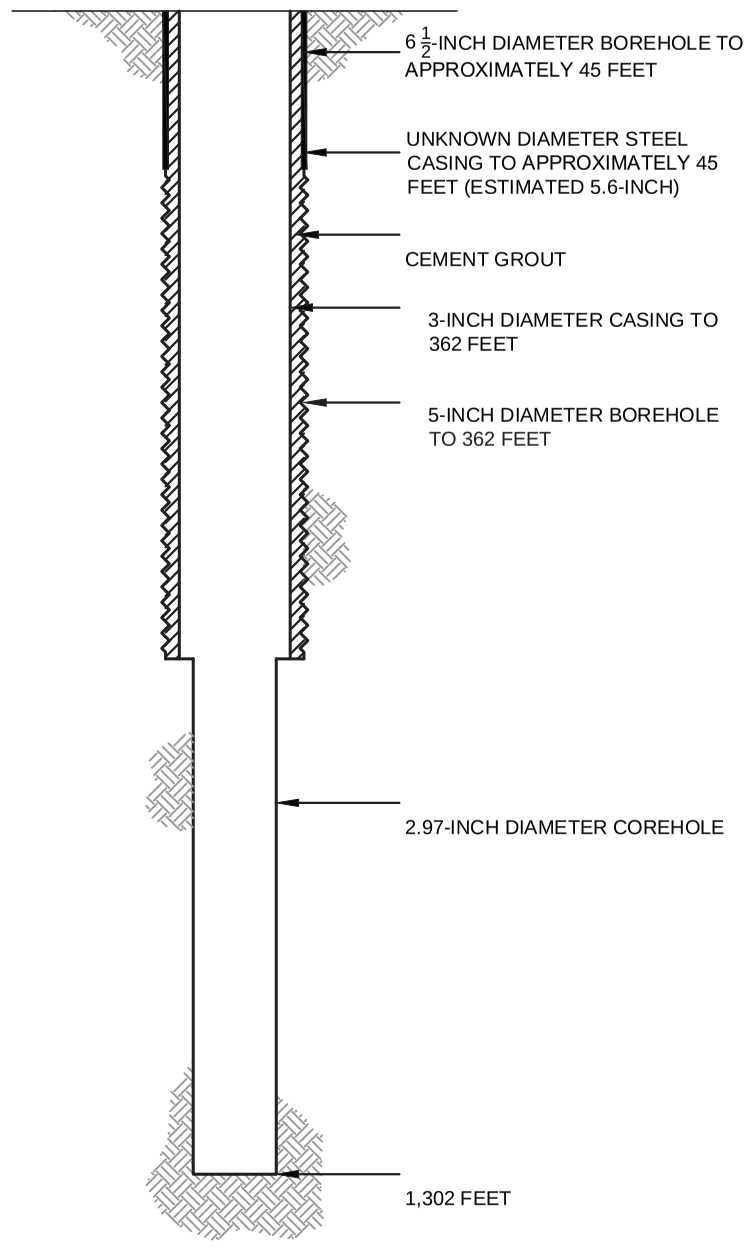

PROPOSED PLUGGING AND ABANDONMENT COREHOLE 380MF

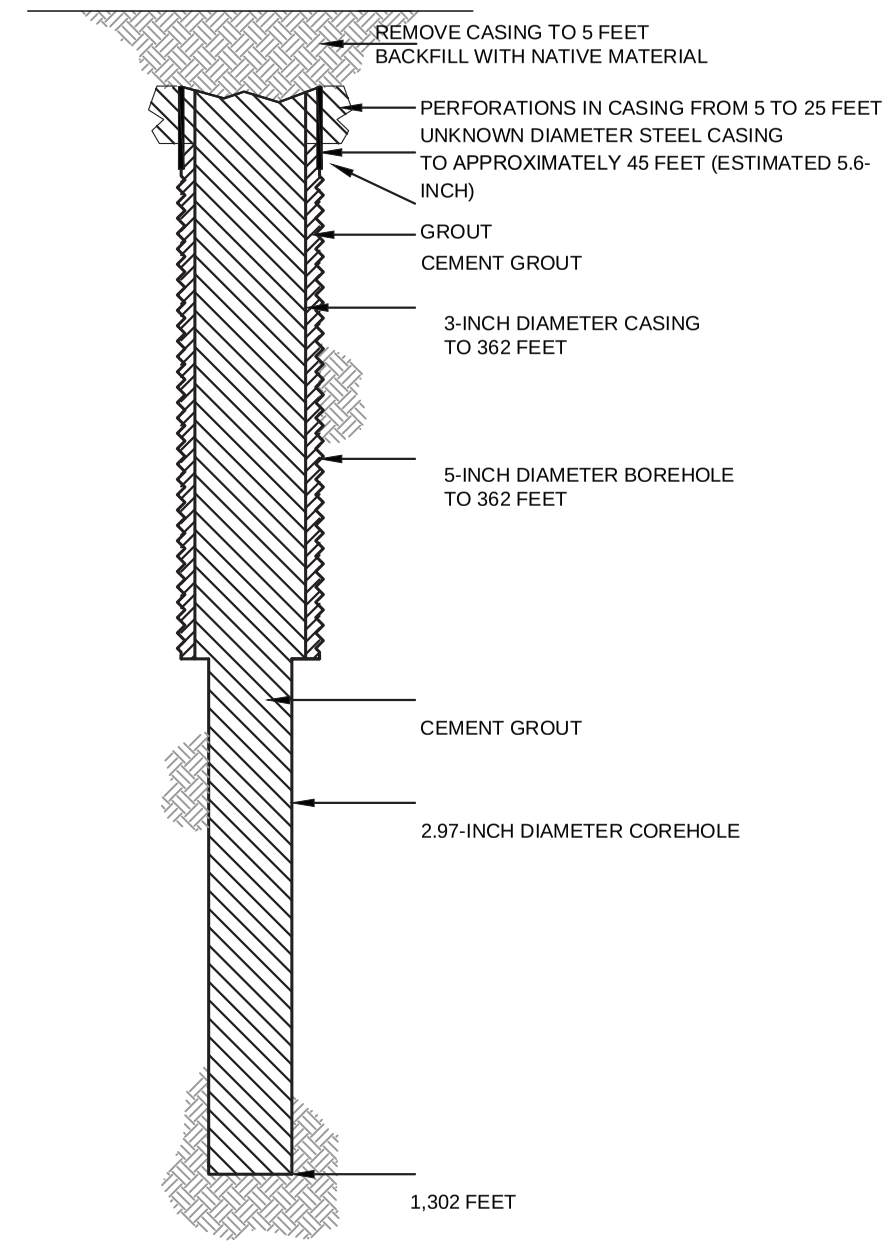

HALEY ALDRICH

FLORENCE COPPER, INC.
FLORENCE, ARIZONA

COREHOLE 380MF DIAGRAM

FLORENCE COPPER INC.

NOT TO SCALE
SEPTEMBER 2019

FIGURE 1

MOBINI, GITA Printed: 4/21/2017 12:00 PM Layout: ABANDON (2)
\PROJECTS\CURIS RESOURCES38706-CURIS FEASIBILITY\DRAWINGS\EPA\WELL ABANDON\415S_ABANDON.DWG

OMB No. 2040-0042 Approval Expires 4/30/2022

United States Environmental Protection Agency

WELL REWORK RECORD, PLUGGING AND ABANDONMENT PLAN, OR PLUGGING AND ABANDONMENT AFFIDAVIT

Name and Address, Phone Number and/or Email of Permittee

Florence Copper Project
1575 W Hunt Hwy,
Florence, AZ 85132

Permit or EPA ID Number	API Number	Full Well Name
R9UIC-AZ3-FY11-1		381MF

State	County
Arizona	Pinal

Locate well in two directions from nearest lines of quarter section and drilling unit

Latitude 33.04676109

Longitude -111.4260939

Surface Location

SW **1/4 of** SE **1/4 of Section** 28 **Township** 4S **Range** 9E

_____ **ft. from (N/S)** _____ **Line of quarter section**

_____ **ft. from (E/W)** _____ **Line of quarter section.**

Well Class	Timing of Action (pick one)	Type of Action (pick one)
☐ Class I ☐ Class II ☑ Class III ☐ Class V	☑ Notice Prior to Work Date Expected to Commence March 2021 ☐ Report After Work Date Work Ended	☐ Well Rework ☑ Plugging and Abandonment ☐ Conversion to a Non-Injection Well

Provide a narrative description of the work planned to be performed, or that was performed. Use additional pages as necessary. See instructions.

A workover rig capable of performing the required abandonment operations at the required depths will be moved in and set up over the core hole. The core hole will be inspected to determine the depth to which the hole remains open and if any obstructions are present in the core hole; the presence and condition of any existing collar will also be documented. If necessary, the core hole will be cleaned out to a depth of at least 100 feet below the bedrock-LBFU contact to enable placement of cement seals.

If collar is present, an attempt will be made to remove it. If removal of the collar is not feasible, it will be left in the hole and perforated as needed to allow an annular seal to be placed to a depth of at least 25 feet bgs. In areas of agricultural use, the surface casing will be cut at least 5 feet bgs and removed.

If the collar cannot be removed, it will be perforated from at least 20 feet below the bedrock-LBFU contact to at least 20 feet above the contact; from at least 20 feet below the base of the MFGU to at least 20 feet above the top of the MFGU; and from at least 25 feet bgs to 5 feet bgs.

A tremie pipe will be used to place Type V cement in the open core hole from the bottom of the core hole to the top of the core hole. Cement retainers, as described above, will be used to force cement grout into the annulus and behind perforated intervals, as necessary.

If the hole has been obstructed, as much cement as possible will be placed from 100 feet below the LBFU-bedrock contact to the top of the core hole.

The volume of Type V cement will be recorded and will not be less than the estimated volume of material required to fill each interval. All cement grout will consist of Type V cement, or equivalent approved in accordance with the UIC Permit.

Certification

I certify under the penalty of law that I have personally examined and am familiar with the information submitted in this document and all attachments and that, based on my inquiry of those individuals immediately responsible for obtaining the information, I believe that the information is true, accurate, and complete. I am aware that there are significant penalties for submitting false information, including the possibliity of fine and imprisonment. (Ref. 40 CFR § 144.32)

Name and Official Title *(Please type or print)*	Signature	Date Signed
Dan Johnson, VP - General Manager		10/3/2019

INSTRUCTIONS FOR FORM 7520-19

This form replaces forms 7520-12 and 7520-14. Use this form only when work is planned or has occurred that affects the well's construction or operation as an injection well, including work on the casing, tubing or packer (or for shallow Class V wells, the subsurface fluid emplacement network). Use one form per injection well. While reports or other information developed by contractors or service companies may be attached, this form must be signed by a responsible entity as described at 40 CFR 144.32. Note: operators closing Class V wells should use Form 7520-17.

NAME, ADDRESS, PHONE AND/OR EMAIL OF PERMITTEE: Enter the name and street address, city/town, state, and ZIP code of the permittee. Also provide an email address (if available) and/or a phone number.

PERMIT OR EPA ID NUMBER: Enter the well identification number or permit number assigned to the well by the EPA or the permitting authority.

API NUMBER: Enter the number assigned by the local jurisdiction (usually a State Oil and Gas Agency) using the American Petroleum Institute standard numbering system.

FULL WELL NAME: Enter the full name of the well or project.

Enter the **STATE** and **COUNTY** where the well is located. For States that do not have counties, use the name of that State's equivalent jurisdiction at a more local level.

WELL LOCATION: Fill in the complete township, range, and section to the nearest quarter-quarter section. A township is north or south of the baseline, and a range is east or west of the principal meridian (e.g., T12N, R34W). Also include the distance, in feet, from the nearest north or south line and nearest east or west line of the quarter-section. Also, enter the **latitude** and **longitude** of the well in decimal degrees, to five or six places if possible; be sure to include a negative sign for the longitude of a well in the Western Hemisphere and a negative sign for the latitude of a well in the Southern Hemisphere.

Enter the **WELL CLASS,** i.e., the class of injection well as defined in 40 CFR 144.6.

TIMING OF THE ACTION: Check ***Notice prior to work*** if the activity has not yet occurred (i.e., is planned). Check ***Report after work*** if the activity described has already occurred. As appropriate, include the date the activity is expected to start or the date the activity was completed. (Note this may not be available, e.g., for a plugging plan submitted with a permit application.)

TYPE OF ACTION: Check the appropriate box to describe the kind of activity being reported. Check ***Well Rework*** for work that was/will be performed on the well after it has already been in operation as an injection well. Check ***Plugging and Abandonment*** to report on plans for or descriptions of final closure/plugging after use as an injection well. Check ***Conversion to a Non-Injection Well*** if the well is to be converted to something other than an injection well.

Provide a **NARRATIVE DESCRIPTION** of the work planned to be performed, or that was performed. The narrative should include a description of the main procedures planned or that occurred during the work activity. A service company report, daily report, or similar document may be attached if it includes all the requested information and is clear and legible.

For well reworks, include the following information: The reason for the well rework; depths of activity; type of activity; changes to injection well configuration, well casing, or cement behind casing; any plug added to the well and its depth; any newly drilled interval and its depth; method(s) to demonstrate that the well has mechanical integrity (as applicable); and any deviations from the approved rework plan (as applicable).

For a well plugging plan, include the following information: Reason for the well plugging; number of plugs placed, and their depths; materials used as plugs (e.g., cast iron bridge plug, cement, cement retainer); method to set plugs; and wait-on-cement times, if any. Also provide one or more cost estimates from an independent firm in the business of plugging and abandoning wells to plug the well as described in the plan.

For well plugging affidavit, include the following information: Reason for the well plugging; number of plugs placed, and their depths; materials used as plugs (e.g., cast iron bridge plug, cement, cement retainer); method to set plugs; wait-on-cement times, if any; and any deviations from the approved plugging plan (if applicable).

For conversion to a non-injection well, include the following information: Depths of activity; type of activity; changes to injection well configuration, well casing, or cement behind casing; any plug added to the well and its depth; any newly drilled interval and its depth; depths of new perforations; and method(s) to demonstrate that the well has mechanical integrity (as applicable).

For all of the above activities, include a well sketch depicting the work, results of well tests/logging performed, service company tickets, and any other available information demonstrating how the work was/is to be performed. Also, specify whether depths are below ground surface, relative to Kelly bushing, etc.

CERTIFICATION: This form must be signed and dated by either: a responsible corporate officer for a corporation, by a general partner for a partnership, by the proprietor of a sole proprietorship, or by a principal executive or ranking elected official for a public agency.

PAPERWORK REDUCTION ACT NOTICE: The public reporting and recordkeeping burden for this collection of information is estimated to average between 6.0 and 7.9 hours per response, depending on the injection well class. Burden means the total time, effort, or financial resource expended by persons to generate, maintain, retain, or disclose or provide information to or for a Federal Agency. This includes the time needed to review instructions; develop, acquire, install, and utilize technology and systems for the purposes of collecting, validating, and verifying information, processing and maintaining information, and disclosing and providing information; adjust the existing ways to comply with any previously applicable instructions and requirements; train personnel to be able to respond to the collection of information; search data sources; complete and review the collection of information; and, transmit or otherwise disclose the information. An agency may not conduct or sponsor, and a person is not required to respond to, a collection of information unless it displays a currently valid OMB control number. Send comments on the Agency's need for this information, the accuracy of the provided burden estimates, and any suggested methods for minimizing respondent burden, including the use of automated collection techniques to Director, Collection Strategies Division, U.S. Environmental Protection Agency (2822), 1200 Pennsylvania Ave., NW., Washington, D.C. 20460. Include the OMB control number in any correspondence. Do not send the completed forms to this address.

AS-BUILT COREHOLE 381MF

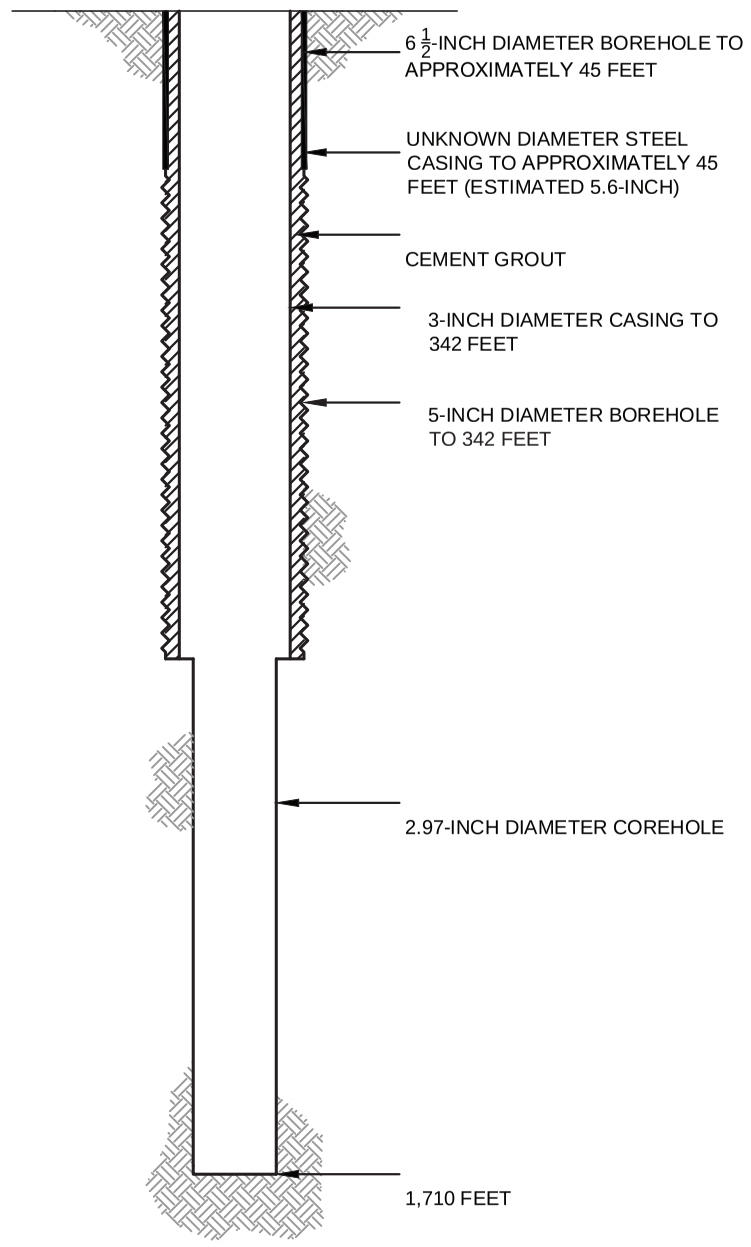

PROPOSED PLUGGING AND ABANDONMENT COREHOLE 381MF

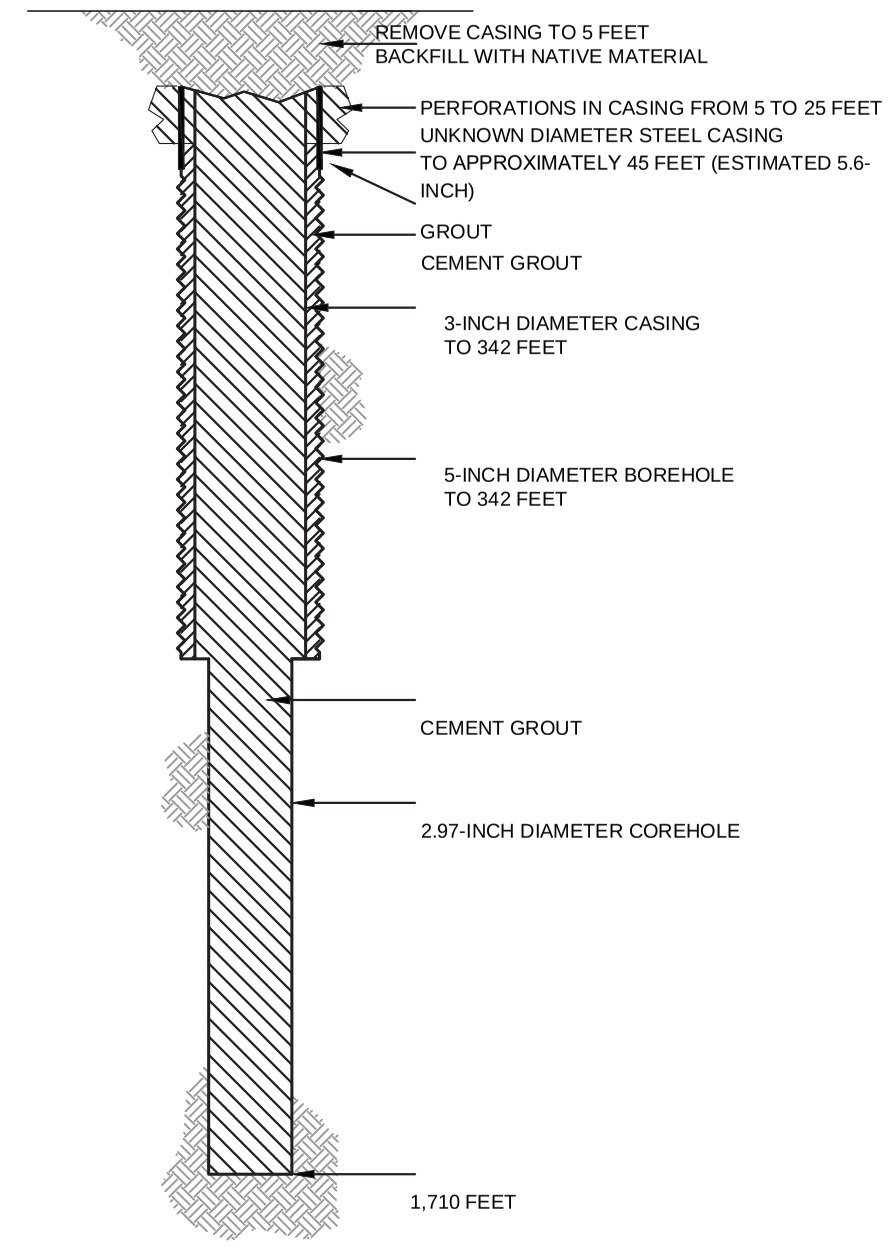

HALEY ALDRICH

FLORENCE COPPER, INC.
FLORENCE, ARIZONA

COREHOLE 381MF DIAGRAM

FLORENCE COPPER INC.

NOT TO SCALE
SEPTEMBER 2019

FIGURE 1

MOBINI, GITA Printed: 4/21/2017 12:00 PM Layout: ABANDON (2)
\PROJECTS\CURIS RESOURCES38706-CURIS FEASIBILITY\DRAWINGS\EPA\WELL ABANDON\415S_ABANDON.DWG

OMB No. 2040-0042 Approval Expires 4/30/2022

United States Environmental Protection Agency

WELL REWORK RECORD, PLUGGING AND ABANDONMENT PLAN, OR PLUGGING AND ABANDONMENT AFFIDAVIT

Name and Address, Phone Number and/or Email of Permittee

Florence Copper Project
1575 W Hunt Hwy,
Florence, AZ 85132

Permit or EPA ID Number	API Number	Full Well Name
R9UIC-AZ3-FY11-1		382MF

State	County
Arizona	Pinal

Locate well in two directions from nearest lines of quarter section and drilling unit

Latitude 33.0467643

Longitude -111.4269098

Surface Location

SW **1/4 of** SE **1/4 of Section** 28 **Township** 4S **Range** 9E

_____ **ft. from (N/S)** _____ **Line of quarter section**

_____ **ft. from (E/W)** _____ **Line of quarter section.**

Well Class	Timing of Action (pick one)	Type of Action (pick one)
☐ Class I ☐ Class II ☑ Class III ☐ Class V	☑ Notice Prior to Work Date Expected to Commence March 2021 ☐ Report After Work Date Work Ended	☐ Well Rework ☑ Plugging and Abandonment ☐ Conversion to a Non-Injection Well

Provide a narrative description of the work planned to be performed, or that was performed. Use additional pages as necessary. See instructions.

A workover rig capable of performing the required abandonment operations at the required depths will be moved in and set up over the core hole. The core hole will be inspected to determine the depth to which the hole remains open and if any obstructions are present in the core hole; the presence and condition of any existing collar will also be documented. If necessary, the core hole will be cleaned out to a depth of at least 100 feet below the bedrock-LBFU contact to enable placement of cement seals.

If collar is present, an attempt will be made to remove it. If removal of the collar is not feasible, it will be left in the hole and perforated as needed to allow an annular seal to be placed to a depth of at least 25 feet bgs. In areas of agricultural use, the surface casing will be cut at least 5 feet bgs and removed.

If the collar cannot be removed, it will be perforated from at least 20 feet below the bedrock-LBFU contact to at least 20 feet above the contact; from at least 20 feet below the base of the MFGU to at least 20 feet above the top of the MFGU; and from at least 25 feet bgs to 5 feet bgs.

A tremie pipe will be used to place Type V cement in the open core hole from the bottom of the core hole to the top of the core hole. Cement retainers, as described above, will be used to force cement grout into the annulus and behind perforated intervals, as necessary.

If the hole has been obstructed, as much cement as possible will be placed from 100 feet below the LBFU-bedrock contact to the top of the core hole.

The volume of Type V cement will be recorded and will not be less than the estimated volume of material required to fill each interval. All cement grout will consist of Type V cement, or equivalent approved in accordance with the UIC Permit.

Certification

I certify under the penalty of law that I have personally examined and am familiar with the information submitted in this document and all attachments and that, based on my inquiry of those individuals immediately responsible for obtaining the information, I believe that the information is true, accurate, and complete. I am aware that there are significant penalties for submitting false information, including the possibliity of fine and imprisonment. (Ref. 40 CFR § 144.32)

Name and Official Title *(Please type or print)*	Signature	Date Signed
Dan Johnson, VP - General Manager		10/3/2019

INSTRUCTIONS FOR FORM 7520-19

This form replaces forms 7520-12 and 7520-14. Use this form only when work is planned or has occurred that affects the well's construction or operation as an injection well, including work on the casing, tubing or packer (or for shallow Class V wells, the subsurface fluid emplacement network). Use one form per injection well. While reports or other information developed by contractors or service companies may be attached, this form must be signed by a responsible entity as described at 40 CFR 144.32. Note: operators closing Class V wells should use Form 7520-17.

NAME, ADDRESS, PHONE AND/OR EMAIL OF PERMITTEE: Enter the name and street address, city/town, state, and ZIP code of the permittee. Also provide an email address (if available) and/or a phone number.

PERMIT OR EPA ID NUMBER: Enter the well identification number or permit number assigned to the well by the EPA or the permitting authority.

API NUMBER: Enter the number assigned by the local jurisdiction (usually a State Oil and Gas Agency) using the American Petroleum Institute standard numbering system.

FULL WELL NAME: Enter the full name of the well or project.

Enter the **STATE** and **COUNTY** where the well is located. For States that do not have counties, use the name of that State's equivalent jurisdiction at a more local level.

WELL LOCATION: Fill in the complete township, range, and section to the nearest quarter-quarter section. A township is north or south of the baseline, and a range is east or west of the principal meridian (e.g., T12N, R34W). Also include the distance, in feet, from the nearest north or south line and nearest east or west line of the quarter-section. Also, enter the **latitude** and **longitude** of the well in decimal degrees, to five or six places if possible; be sure to include a negative sign for the longitude of a well in the Western Hemisphere and a negative sign for the latitude of a well in the Southern Hemisphere.

Enter the **WELL CLASS,** i.e., the class of injection well as defined in 40 CFR 144.6.

TIMING OF THE ACTION: Check ***Notice prior to work*** if the activity has not yet occurred (i.e., is planned). Check ***Report after work*** if the activity described has already occurred. As appropriate, include the date the activity is expected to start or the date the activity was completed. (Note this may not be available, e.g., for a plugging plan submitted with a permit application.)

TYPE OF ACTION: Check the appropriate box to describe the kind of activity being reported. Check ***Well Rework*** for work that was/will be performed on the well after it has already been in operation as an injection well. Check ***Plugging and Abandonment*** to report on plans for or descriptions of final closure/plugging after use as an injection well. Check ***Conversion to a Non-Injection Well*** if the well is to be converted to something other than an injection well.

Provide a **NARRATIVE DESCRIPTION** of the work planned to be performed, or that was performed. The narrative should include a description of the main procedures planned or that occurred during the work activity. A service company report, daily report, or similar document may be attached if it includes all the requested information and is clear and legible.

For well reworks, include the following information: The reason for the well rework; depths of activity; type of activity; changes to injection well configuration, well casing, or cement behind casing; any plug added to the well and its depth; any newly drilled interval and its depth; method(s) to demonstrate that the well has mechanical integrity (as applicable); and any deviations from the approved rework plan (as applicable).

For a well plugging plan, include the following information: Reason for the well plugging; number of plugs placed, and their depths; materials used as plugs (e.g., cast iron bridge plug, cement, cement retainer); method to set plugs; and wait-on-cement times, if any. Also provide one or more cost estimates from an independent firm in the business of plugging and abandoning wells to plug the well as described in the plan.

For well plugging affidavit, include the following information: Reason for the well plugging; number of plugs placed, and their depths; materials used as plugs (e.g., cast iron bridge plug, cement, cement retainer); method to set plugs; wait-on-cement times, if any; and any deviations from the approved plugging plan (if applicable).

For conversion to a non-injection well, include the following information: Depths of activity; type of activity; changes to injection well configuration, well casing, or cement behind casing; any plug added to the well and its depth; any newly drilled interval and its depth; depths of new perforations; and method(s) to demonstrate that the well has mechanical integrity (as applicable).

For all of the above activities, include a well sketch depicting the work, results of well tests/logging performed, service company tickets, and any other available information demonstrating how the work was/is to be performed. Also, specify whether depths are below ground surface, relative to Kelly bushing, etc.

CERTIFICATION: This form must be signed and dated by either: a responsible corporate officer for a corporation, by a general partner for a partnership, by the proprietor of a sole proprietorship, or by a principal executive or ranking elected official for a public agency.

PAPERWORK REDUCTION ACT NOTICE: The public reporting and recordkeeping burden for this collection of information is estimated to average between 6.0 and 7.9 hours per response, depending on the injection well class. Burden means the total time, effort, or financial resource expended by persons to generate, maintain, retain, or disclose or provide information to or for a Federal Agency. This includes the time needed to review instructions; develop, acquire, install, and utilize technology and systems for the purposes of collecting, validating, and verifying information, processing and maintaining information, and disclosing and providing information; adjust the existing ways to comply with any previously applicable instructions and requirements; train personnel to be able to respond to the collection of information; search data sources; complete and review the collection of information; and, transmit or otherwise disclose the information. An agency may not conduct or sponsor, and a person is not required to respond to, a collection of information unless it displays a currently valid OMB control number. Send comments on the Agency's need for this information, the accuracy of the provided burden estimates, and any suggested methods for minimizing respondent burden, including the use of automated collection techniques to Director, Collection Strategies Division, U.S. Environmental Protection Agency (2822), 1200 Pennsylvania Ave., NW., Washington, D.C. 20460. Include the OMB control number in any correspondence. Do not send the completed forms to this address.

AS-BUILT COREHOLE 382MF

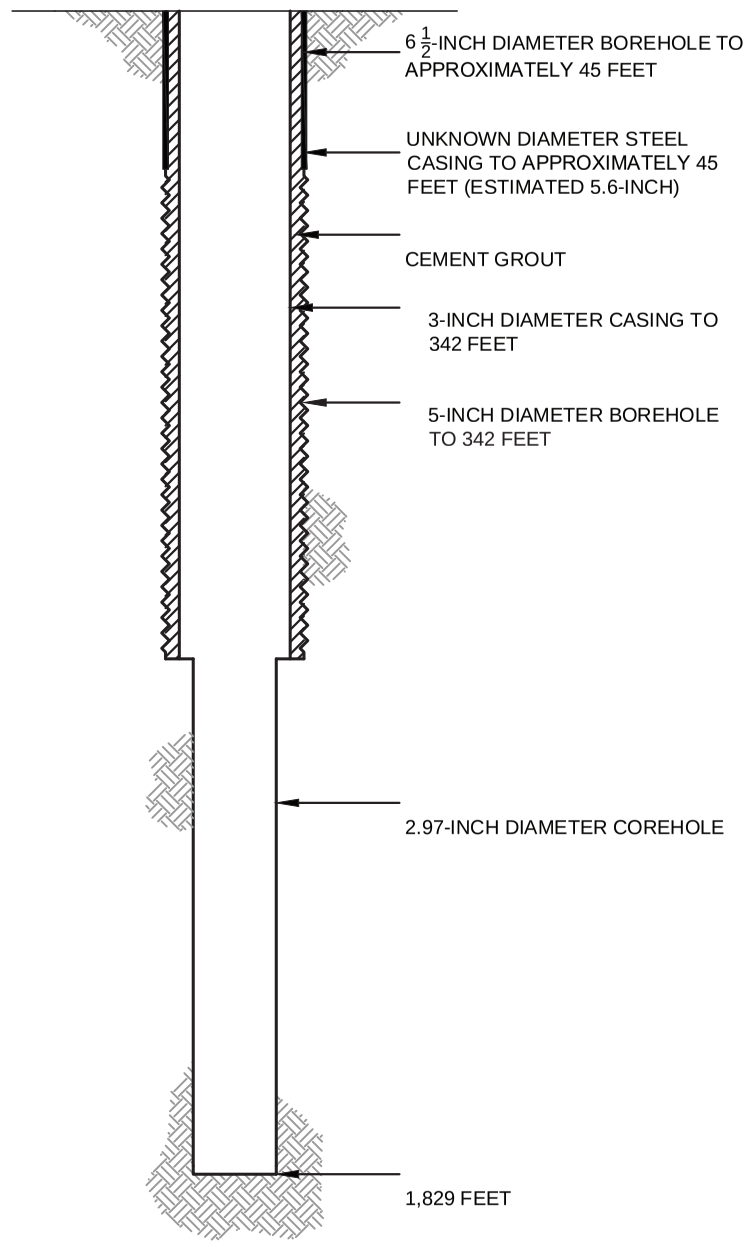

PROPOSED PLUGGING AND ABANDONMENT COREHOLE 382MF

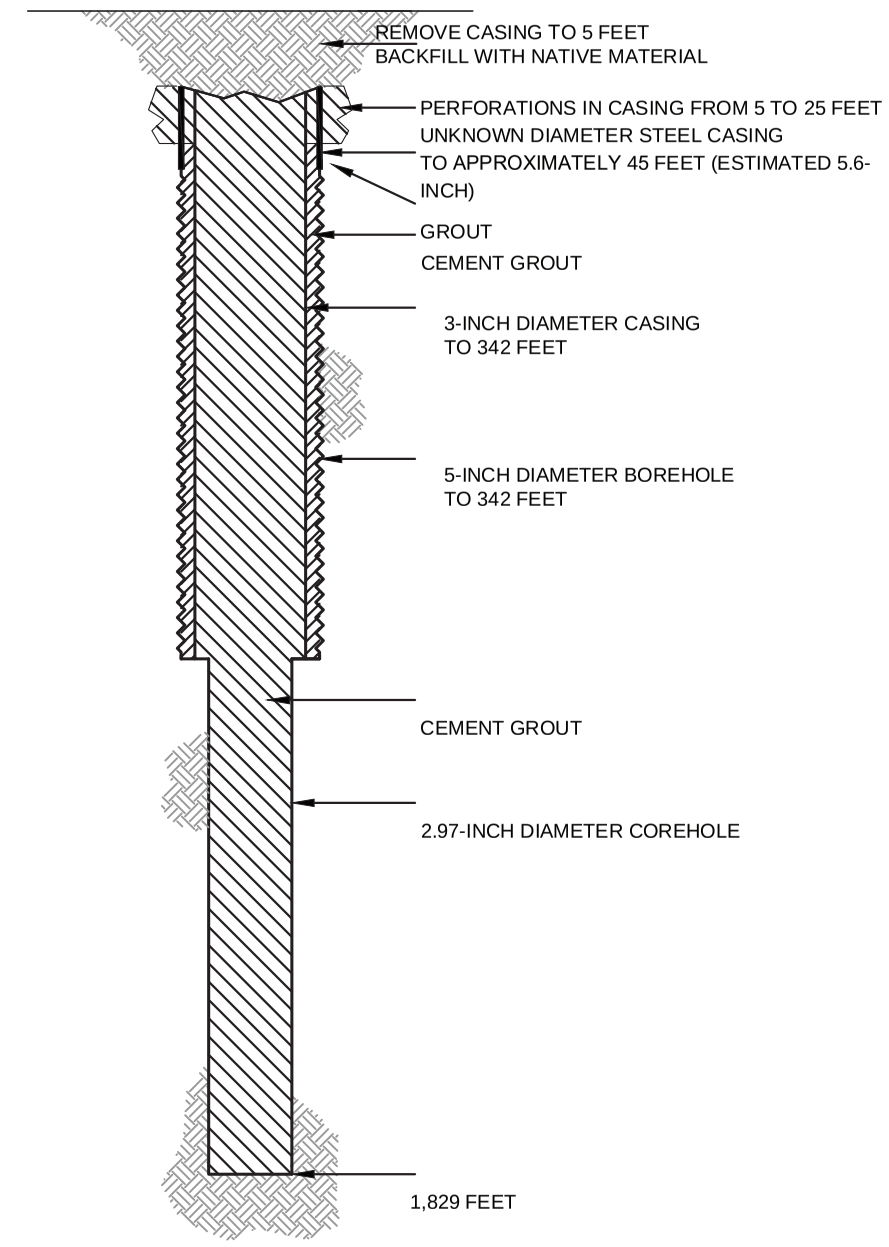

HALEY ALDRICH

FLORENCE COPPER, INC.
FLORENCE, ARIZONA

COREHOLE 382MF DIAGRAM

FLORENCE COPPER INC.

NOT TO SCALE
SEPTEMBER 2019

FIGURE 1

MOBINI, GITA Printed: 4/21/2017 12:00 PM Layout: ABANDON (2)
\PROJECTS\CURIS RESOURCES38706-CURIS FEASIBILITY\DRAWINGS\EPA\WELL ABANDON\415S_ABANDON.DWG

OMB No. 2040-0042 Approval Expires 4/30/2022

United States Environmental Protection Agency

WELL REWORK RECORD, PLUGGING AND ABANDONMENT PLAN, OR PLUGGING AND ABANDONMENT AFFIDAVIT

Name and Address, Phone Number and/or Email of Permittee

Florence Copper Project
1575 W Hunt Hwy,
Florence, AZ 85132

Permit or EPA ID Number	API Number	Full Well Name
R9UIC-AZ3-FY11-1		383MF

State	County
Arizona	Pinal

Locate well in two directions from nearest lines of quarter section and drilling unit

Latitude 33.04795122

Longitude -111.4260873

Surface Location

SW **1/4 of** SE **1/4 of Section** 28 **Township** 4S **Range** 9E

_____ **ft. from (N/S)** _____ **Line of quarter section**

_____ **ft. from (E/W)** _____ **Line of quarter section.**

Well Class	Timing of Action (pick one)	Type of Action (pick one)
☐ Class I ☐ Class II ☑ Class III ☐ Class V	☑ Notice Prior to Work Date Expected to Commence March 2021 ☐ Report After Work Date Work Ended	☐ Well Rework ☑ Plugging and Abandonment ☐ Conversion to a Non-Injection Well

Provide a narrative description of the work planned to be performed, or that was performed. Use additional pages as necessary. See instructions.

A workover rig capable of performing the required abandonment operations at the required depths will be moved in and set up over the core hole. The core hole will be inspected to determine the depth to which the hole remains open and if any obstructions are present in the core hole; the presence and condition of any existing collar will also be documented. If necessary, the core hole will be cleaned out to a depth of at least 100 feet below the bedrock-LBFU contact to enable placement of cement seals.

If collar is present, an attempt will be made to remove it. If removal of the collar is not feasible, it will be left in the hole and perforated as needed to allow an annular seal to be placed to a depth of at least 25 feet bgs. In areas of agricultural use, the surface casing will be cut at least 5 feet bgs and removed.

If the collar cannot be removed, it will be perforated from at least 20 feet below the bedrock-LBFU contact to at least 20 feet above the contact; from at least 20 feet below the base of the MFGU to at least 20 feet above the top of the MFGU; and from at least 25 feet bgs to 5 feet bgs.

A tremie pipe will be used to place Type V cement in the open core hole from the bottom of the core hole to the top of the core hole. Cement retainers, as described above, will be used to force cement grout into the annulus and behind perforated intervals, as necessary.

If the hole has been obstructed, as much cement as possible will be placed from 100 feet below the LBFU-bedrock contact to the top of the core hole.

The volume of Type V cement will be recorded and will not be less than the estimated volume of material required to fill each interval. All cement grout will consist of Type V cement, or equivalent approved in accordance with the UIC Permit.

Certification

I certify under the penalty of law that I have personally examined and am familiar with the information submitted in this document and all attachments and that, based on my inquiry of those individuals immediately responsible for obtaining the information, I believe that the information is true, accurate, and complete. I am aware that there are significant penalties for submitting false information, including the possibliity of fine and imprisonment. (Ref. 40 CFR § 144.32)

Name and Official Title *(Please type or print)*	Signature	Date Signed
Dan Johnson, VP - General Manager		10/3/2019

INSTRUCTIONS FOR FORM 7520-19

This form replaces forms 7520-12 and 7520-14. Use this form only when work is planned or has occurred that affects the well's construction or operation as an injection well, including work on the casing, tubing or packer (or for shallow Class V wells, the subsurface fluid emplacement network). Use one form per injection well. While reports or other information developed by contractors or service companies may be attached, this form must be signed by a responsible entity as described at 40 CFR 144.32. Note: operators closing Class V wells should use Form 7520-17.

NAME, ADDRESS, PHONE AND/OR EMAIL OF PERMITTEE: Enter the name and street address, city/town, state, and ZIP code of the permittee. Also provide an email address (if available) and/or a phone number.

PERMIT OR EPA ID NUMBER: Enter the well identification number or permit number assigned to the well by the EPA or the permitting authority.

API NUMBER: Enter the number assigned by the local jurisdiction (usually a State Oil and Gas Agency) using the American Petroleum Institute standard numbering system.

FULL WELL NAME: Enter the full name of the well or project.

Enter the **STATE** and **COUNTY** where the well is located. For States that do not have counties, use the name of that State's equivalent jurisdiction at a more local level.

WELL LOCATION: Fill in the complete township, range, and section to the nearest quarter-quarter section. A township is north or south of the baseline, and a range is east or west of the principal meridian (e.g., T12N, R34W). Also include the distance, in feet, from the nearest north or south line and nearest east or west line of the quarter-section. Also, enter the **latitude** and **longitude** of the well in decimal degrees, to five or six places if possible; be sure to include a negative sign for the longitude of a well in the Western Hemisphere and a negative sign for the latitude of a well in the Southern Hemisphere.

Enter the **WELL CLASS,** i.e., the class of injection well as defined in 40 CFR 144.6.

TIMING OF THE ACTION: Check ***Notice prior to work*** if the activity has not yet occurred (i.e., is planned). Check ***Report after work*** if the activity described has already occurred. As appropriate, include the date the activity is expected to start or the date the activity was completed. (Note this may not be available, e.g., for a plugging plan submitted with a permit application.)

TYPE OF ACTION: Check the appropriate box to describe the kind of activity being reported. Check ***Well Rework*** for work that was/will be performed on the well after it has already been in operation as an injection well. Check ***Plugging and Abandonment*** to report on plans for or descriptions of final closure/plugging after use as an injection well. Check ***Conversion to a Non-Injection Well*** if the well is to be converted to something other than an injection well.

Provide a **NARRATIVE DESCRIPTION** of the work planned to be performed, or that was performed. The narrative should include a description of the main procedures planned or that occurred during the work activity. A service company report, daily report, or similar document may be attached if it includes all the requested information and is clear and legible.

For well reworks, include the following information: The reason for the well rework; depths of activity; type of activity; changes to injection well configuration, well casing, or cement behind casing; any plug added to the well and its depth; any newly drilled interval and its depth; method(s) to demonstrate that the well has mechanical integrity (as applicable); and any deviations from the approved rework plan (as applicable).

For a well plugging plan, include the following information: Reason for the well plugging; number of plugs placed, and their depths; materials used as plugs (e.g., cast iron bridge plug, cement, cement retainer); method to set plugs; and wait-on-cement times, if any. Also provide one or more cost estimates from an independent firm in the business of plugging and abandoning wells to plug the well as described in the plan.

For well plugging affidavit, include the following information: Reason for the well plugging; number of plugs placed, and their depths; materials used as plugs (e.g., cast iron bridge plug, cement, cement retainer); method to set plugs; wait-on-cement times, if any; and any deviations from the approved plugging plan (if applicable).

For conversion to a non-injection well, include the following information: Depths of activity; type of activity; changes to injection well configuration, well casing, or cement behind casing; any plug added to the well and its depth; any newly drilled interval and its depth; depths of new perforations; and method(s) to demonstrate that the well has mechanical integrity (as applicable).

For all of the above activities, include a well sketch depicting the work, results of well tests/logging performed, service company tickets, and any other available information demonstrating how the work was/is to be performed. Also, specify whether depths are below ground surface, relative to Kelly bushing, etc.

CERTIFICATION: This form must be signed and dated by either: a responsible corporate officer for a corporation, by a general partner for a partnership, by the proprietor of a sole proprietorship, or by a principal executive or ranking elected official for a public agency.

PAPERWORK REDUCTION ACT NOTICE: The public reporting and recordkeeping burden for this collection of information is estimated to average between 6.0 and 7.9 hours per response, depending on the injection well class. Burden means the total time, effort, or financial resource expended by persons to generate, maintain, retain, or disclose or provide information to or for a Federal Agency. This includes the time needed to review instructions; develop, acquire, install, and utilize technology and systems for the purposes of collecting, validating, and verifying information, processing and maintaining information, and disclosing and providing information; adjust the existing ways to comply with any previously applicable instructions and requirements; train personnel to be able to respond to the collection of information; search data sources; complete and review the collection of information; and, transmit or otherwise disclose the information. An agency may not conduct or sponsor, and a person is not required to respond to, a collection of information unless it displays a currently valid OMB control number. Send comments on the Agency's need for this information, the accuracy of the provided burden estimates, and any suggested methods for minimizing respondent burden, including the use of automated collection techniques to Director, Collection Strategies Division, U.S. Environmental Protection Agency (2822), 1200 Pennsylvania Ave., NW., Washington, D.C. 20460. Include the OMB control number in any correspondence. Do not send the completed forms to this address.

AS-BUILT COREHOLE 383MF

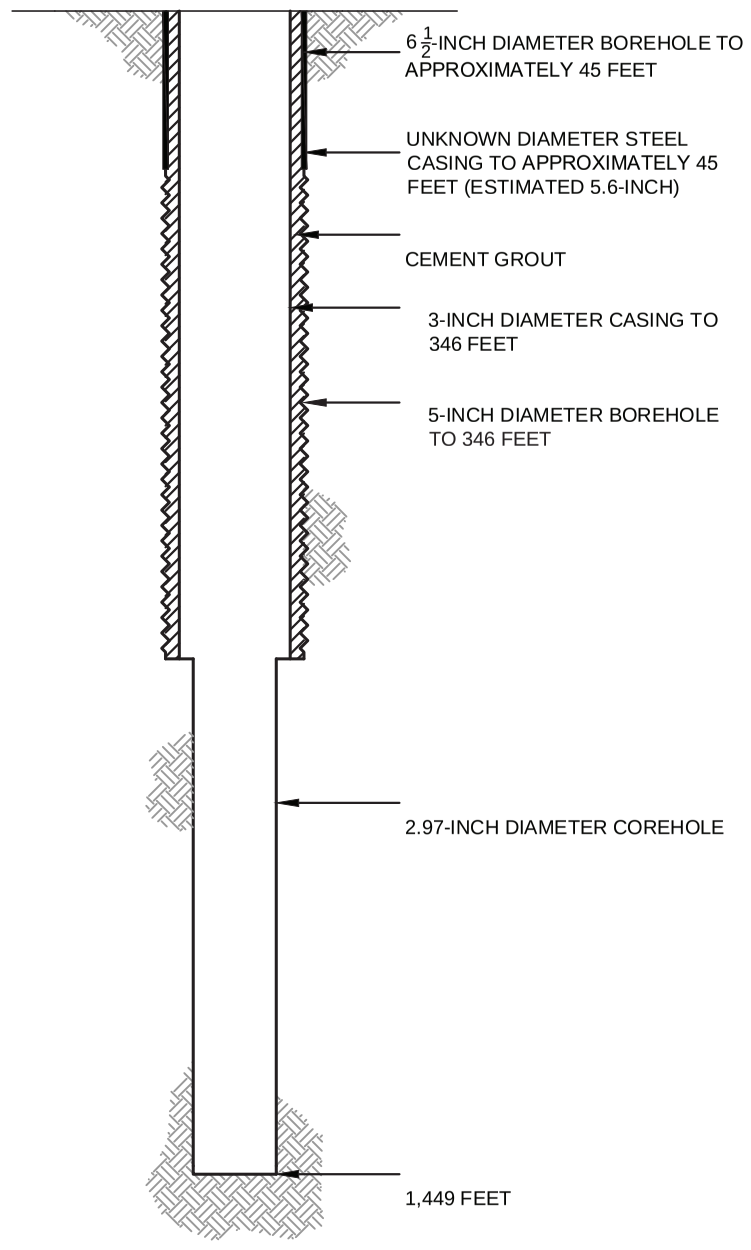

PROPOSED PLUGGING AND ABANDONMENT COREHOLE 383MF

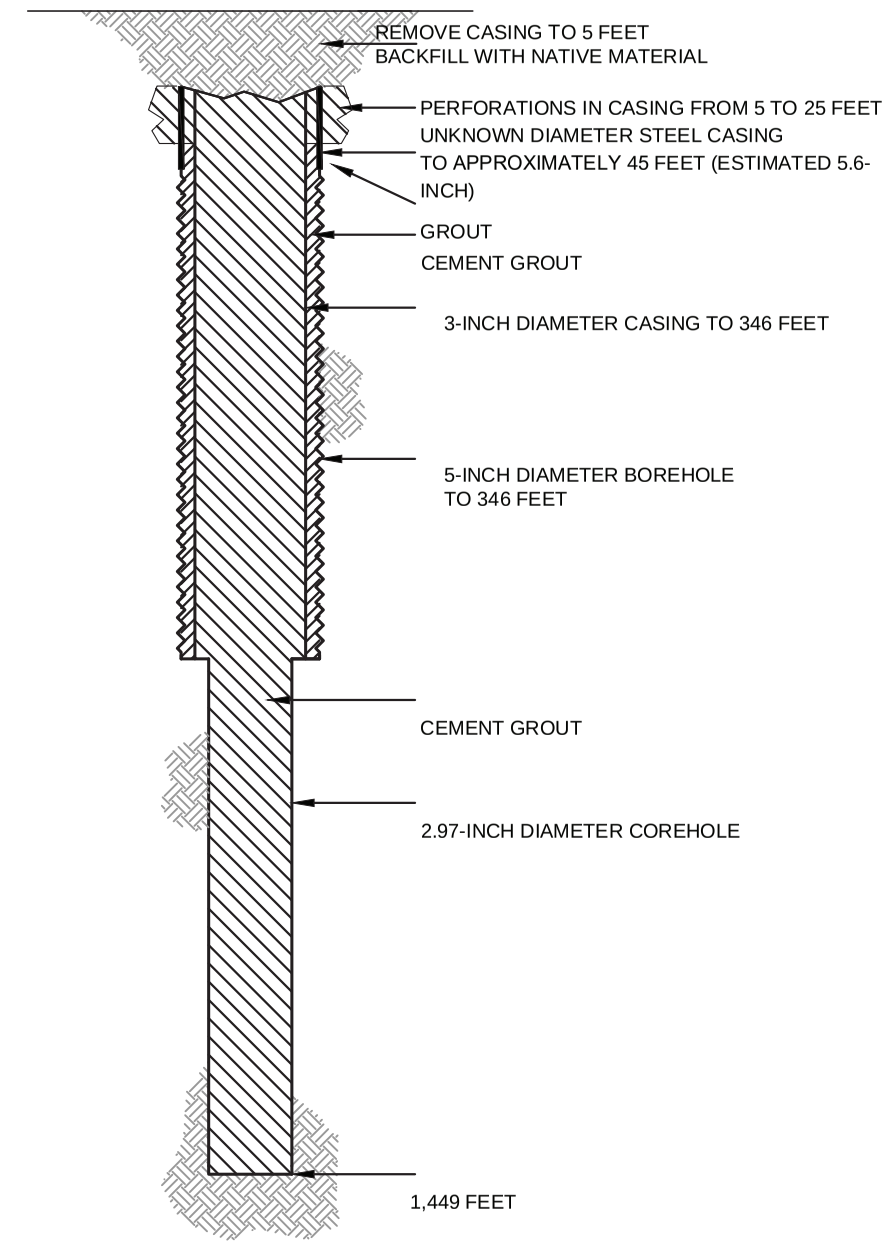

HALEY ALDRICH

FLORENCE COPPER, INC.
FLORENCE, ARIZONA

COREHOLE 383MF DIAGRAM

FLORENCE COPPER INC.

NOT TO SCALE
SEPTEMBER 2019

FIGURE 1

MOBINI, GITA Printed: 4/21/2017 12:00 PM Layout: ABANDON (2)
\PROJECTS\CURIS RESOURCES38706-CURIS FEASIBILITY\DRAWINGS\EPA\WELL ABANDON\415S_ABANDON.DWG

OMB No. 2040-0042 Approval Expires 4/30/2022

United States Environmental Protection Agency

WELL REWORK RECORD, PLUGGING AND ABANDONMENT PLAN, OR PLUGGING AND ABANDONMENT AFFIDAVIT

Name and Address, Phone Number and/or Email of Permittee

Florence Copper Project
1575 W Hunt Hwy,
Florence, AZ 85132

Permit or EPA ID Number	API Number	Full Well Name
R9UIC-AZ3-FY11-1		384MF

State	County
Arizona	Pinal

Locate well in two directions from nearest lines of quarter section and drilling unit

Surface Location

SE 1/4 of SE 1/4 of Section 28 Township 4S Range 9E

Latitude 33.04794801

Longitude -111.4252714

_____ ft. from (N/S) _____ Line of quarter section

_____ ft. from (E/W) _____ Line of quarter section.

Well Class	Timing of Action (pick one)	Type of Action (pick one)
☐ Class I ☐ Class II ☑ Class III ☐ Class V	☑ Notice Prior to Work Date Expected to Commence March 2021 ☐ Report After Work Date Work Ended	☐ Well Rework ☑ Plugging and Abandonment ☐ Conversion to a Non-Injection Well

Provide a narrative description of the work planned to be performed, or that was performed. Use additional pages as necessary. See instructions.

A workover rig capable of performing the required abandonment operations at the required depths will be moved in and set up over the core hole. The core hole will be inspected to determine the depth to which the hole remains open and if any obstructions are present in the core hole; the presence and condition of any existing collar will also be documented. If necessary, the core hole will be cleaned out to a depth of at least 100 feet below the bedrock-LBFU contact to enable placement of cement seals.

If collar is present, an attempt will be made to remove it. If removal of the collar is not feasible, it will be left in the hole and perforated as needed to allow an annular seal to be placed to a depth of at least 25 feet bgs. In areas of agricultural use, the surface casing will be cut at least 5 feet bgs and removed.

If the collar cannot be removed, it will be perforated from at least 20 feet below the bedrock-LBFU contact to at least 20 feet above the contact; from at least 20 feet below the base of the MFGU to at least 20 feet above the top of the MFGU; and from at least 25 feet bgs to 5 feet bgs.

A tremie pipe will be used to place Type V cement in the open core hole from the bottom of the core hole to the top of the core hole. Cement retainers, as described above, will be used to force cement grout into the annulus and behind perforated intervals, as necessary.

If the hole has been obstructed, as much cement as possible will be placed from 100 feet below the LBFU-bedrock contact to the top of the core hole.

The volume of Type V cement will be recorded and will not be less than the estimated volume of material required to fill each interval. All cement grout will consist of Type V cement, or equivalent approved in accordance with the UIC Permit.

Certification

I certify under the penalty of law that I have personally examined and am familiar with the information submitted in this document and all attachments and that, based on my inquiry of those individuals immediately responsible for obtaining the information, I believe that the information is true, accurate, and complete. I am aware that there are significant penalties for submitting false information, including the possibliity of fine and imprisonment. (Ref. 40 CFR § 144.32)

Name and Official Title *(Please type or print)*	Signature	Date Signed
Dan Johnson, VP - General Manager		10/3/2019

INSTRUCTIONS FOR FORM 7520-19

This form replaces forms 7520-12 and 7520-14. Use this form only when work is planned or has occurred that affects the well's construction or operation as an injection well, including work on the casing, tubing or packer (or for shallow Class V wells, the subsurface fluid emplacement network). Use one form per injection well. While reports or other information developed by contractors or service companies may be attached, this form must be signed by a responsible entity as described at 40 CFR 144.32. Note: operators closing Class V wells should use Form 7520-17.

NAME, ADDRESS, PHONE AND/OR EMAIL OF PERMITTEE: Enter the name and street address, city/town, state, and ZIP code of the permittee. Also provide an email address (if available) and/or a phone number.

PERMIT OR EPA ID NUMBER: Enter the well identification number or permit number assigned to the well by the EPA or the permitting authority.

API NUMBER: Enter the number assigned by the local jurisdiction (usually a State Oil and Gas Agency) using the American Petroleum Institute standard numbering system.

FULL WELL NAME: Enter the full name of the well or project.

Enter the **STATE** and **COUNTY** where the well is located. For States that do not have counties, use the name of that State's equivalent jurisdiction at a more local level.

WELL LOCATION: Fill in the complete township, range, and section to the nearest quarter-quarter section. A township is north or south of the baseline, and a range is east or west of the principal meridian (e.g., T12N, R34W). Also include the distance, in feet, from the nearest north or south line and nearest east or west line of the quarter-section. Also, enter the **latitude** and **longitude** of the well in decimal degrees, to five or six places if possible; be sure to include a negative sign for the longitude of a well in the Western Hemisphere and a negative sign for the latitude of a well in the Southern Hemisphere.

Enter the **WELL CLASS,** i.e., the class of injection well as defined in 40 CFR 144.6.

TIMING OF THE ACTION: Check ***Notice prior to work*** if the activity has not yet occurred (i.e., is planned). Check ***Report after work*** if the activity described has already occurred. As appropriate, include the date the activity is expected to start or the date the activity was completed. (Note this may not be available, e.g., for a plugging plan submitted with a permit application.)

TYPE OF ACTION: Check the appropriate box to describe the kind of activity being reported. Check ***Well Rework*** for work that was/will be performed on the well after it has already been in operation as an injection well. Check ***Plugging and Abandonment*** to report on plans for or descriptions of final closure/plugging after use as an injection well. Check ***Conversion to a Non-Injection Well*** if the well is to be converted to something other than an injection well.

Provide a **NARRATIVE DESCRIPTION** of the work planned to be performed, or that was performed. The narrative should include a description of the main procedures planned or that occurred during the work activity. A service company report, daily report, or similar document may be attached if it includes all the requested information and is clear and legible.

For well reworks, include the following information: The reason for the well rework; depths of activity; type of activity; changes to injection well configuration, well casing, or cement behind casing; any plug added to the well and its depth; any newly drilled interval and its depth; method(s) to demonstrate that the well has mechanical integrity (as applicable); and any deviations from the approved rework plan (as applicable).

For a well plugging plan, include the following information: Reason for the well plugging; number of plugs placed, and their depths; materials used as plugs (e.g., cast iron bridge plug, cement, cement retainer); method to set plugs; and wait-on-cement times, if any. Also provide one or more cost estimates from an independent firm in the business of plugging and abandoning wells to plug the well as described in the plan.

For well plugging affidavit, include the following information: Reason for the well plugging; number of plugs placed, and their depths; materials used as plugs (e.g., cast iron bridge plug, cement, cement retainer); method to set plugs; wait-on-cement times, if any; and any deviations from the approved plugging plan (if applicable).

For conversion to a non-injection well, include the following information: Depths of activity; type of activity; changes to injection well configuration, well casing, or cement behind casing; any plug added to the well and its depth; any newly drilled interval and its depth; depths of new perforations; and method(s) to demonstrate that the well has mechanical integrity (as applicable).

For all of the above activities, include a well sketch depicting the work, results of well tests/logging performed, service company tickets, and any other available information demonstrating how the work was/is to be performed. Also, specify whether depths are below ground surface, relative to Kelly bushing, etc.

CERTIFICATION: This form must be signed and dated by either: a responsible corporate officer for a corporation, by a general partner for a partnership, by the proprietor of a sole proprietorship, or by a principal executive or ranking elected official for a public agency.

PAPERWORK REDUCTION ACT NOTICE: The public reporting and recordkeeping burden for this collection of information is estimated to average between 6.0 and 7.9 hours per response, depending on the injection well class. Burden means the total time, effort, or financial resource expended by persons to generate, maintain, retain, or disclose or provide information to or for a Federal Agency. This includes the time needed to review instructions; develop, acquire, install, and utilize technology and systems for the purposes of collecting, validating, and verifying information, processing and maintaining information, and disclosing and providing information; adjust the existing ways to comply with any previously applicable instructions and requirements; train personnel to be able to respond to the collection of information; search data sources; complete and review the collection of information; and, transmit or otherwise disclose the information. An agency may not conduct or sponsor, and a person is not required to respond to, a collection of information unless it displays a currently valid OMB control number. Send comments on the Agency's need for this information, the accuracy of the provided burden estimates, and any suggested methods for minimizing respondent burden, including the use of automated collection techniques to Director, Collection Strategies Division, U.S. Environmental Protection Agency (2822), 1200 Pennsylvania Ave., NW., Washington, D.C. 20460. Include the OMB control number in any correspondence. Do not send the completed forms to this address.

AS-BUILT COREHOLE 384MF

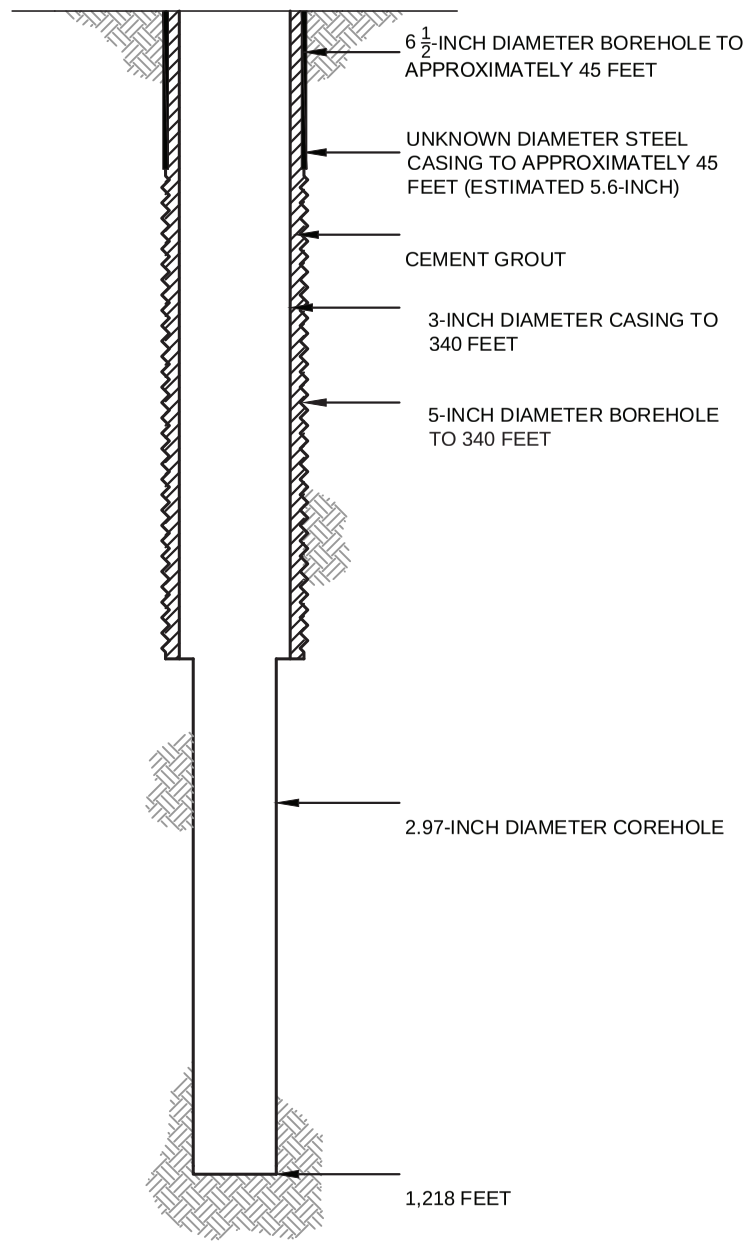

PROPOSED PLUGGING AND ABANDONMENT COREHOLE 384MF

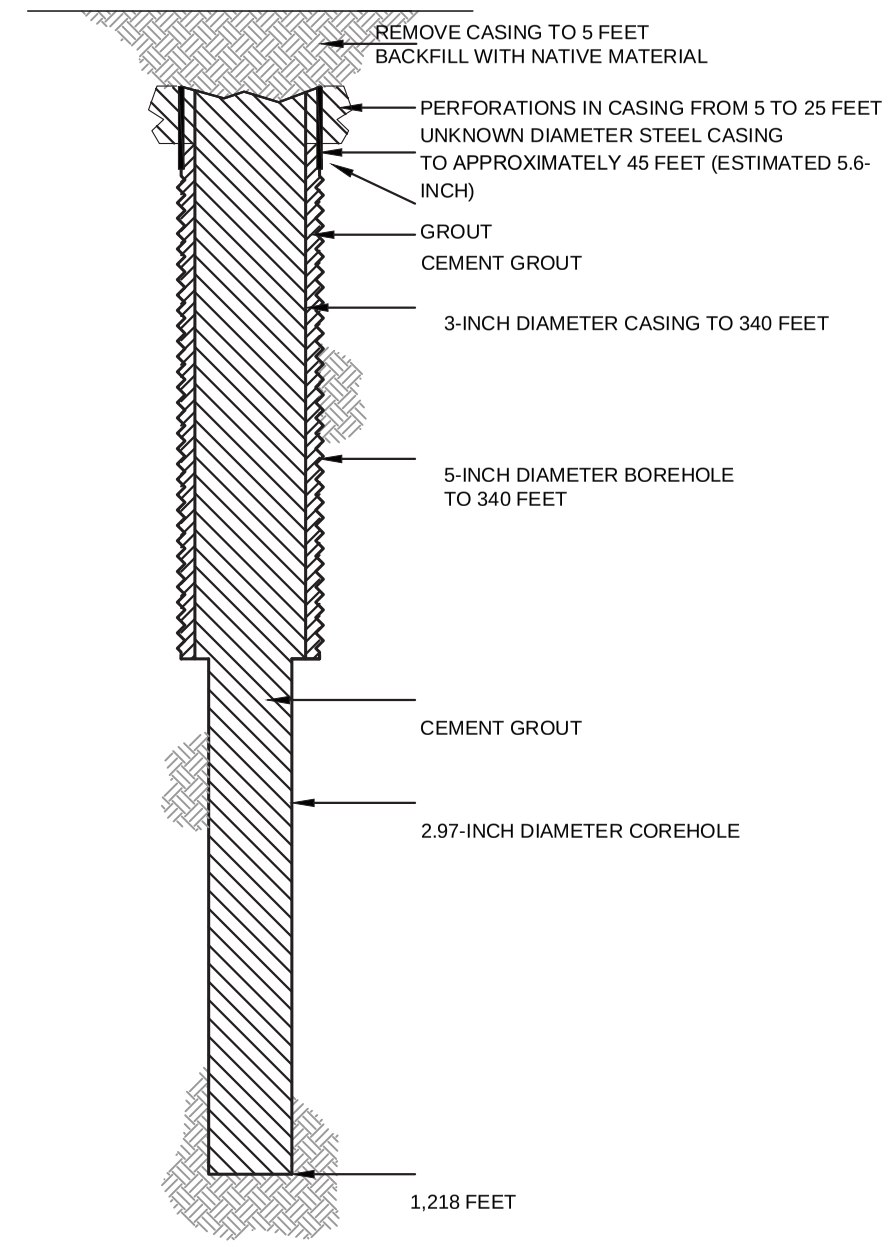

HALEY ALDRICH

FLORENCE COPPER, INC.
FLORENCE, ARIZONA

COREHOLE 384MF DIAGRAM

FLORENCE COPPER INC.

NOT TO SCALE
SEPTEMBER 2019

FIGURE 1

MOBINI, GITA Printed: 4/21/2017 12:00 PM Layout: ABANDON (2)
\PROJECTS\CURIS RESOURCES38706-CURIS FEASIBILITY\DRAWINGS\EPA\WELL ABANDON\415S_ABANDON.DWG

OMB No. 2040-0042 Approval Expires 4/30/2022

United States Environmental Protection Agency

EPA

WELL REWORK RECORD, PLUGGING AND ABANDONMENT PLAN, OR PLUGGING AND ABANDONMENT AFFIDAVIT

Name and Address, Phone Number and/or Email of Permittee

Florence Copper Project
1575 W Hunt Hwy,
Florence, AZ 85132

Permit or EPA ID Number	API Number	Full Well Name
R9UIC-AZ3-FY11-1		385MF

State	County
Arizona	Pinal

Locate well in two directions from nearest lines of quarter section and drilling unit

Latitude 33.04794479

Longitude -111.4244556

Surface Location

SE **1/4 of** SE **1/4 of Section** 28 **Township** 4S **Range** 9E

_____ **ft. from (N/S)** _____ **Line of quarter section**

_____ **ft. from (E/W)** _____ **Line of quarter section.**

Well Class	Timing of Action (pick one)	Type of Action (pick one)
☐ Class I ☐ Class II ☑ Class III ☐ Class V	☑ Notice Prior to Work Date Expected to Commence March 2021 ☐ Report After Work Date Work Ended	☐ Well Rework ☑ Plugging and Abandonment ☐ Conversion to a Non-Injection Well

Provide a narrative description of the work planned to be performed, or that was performed. Use additional pages as necessary. See instructions.

A workover rig capable of performing the required abandonment operations at the required depths will be moved in and set up over the core hole. The core hole will be inspected to determine the depth to which the hole remains open and if any obstructions are present in the core hole; the presence and condition of any existing collar will also be documented. If necessary, the core hole will be cleaned out to a depth of at least 100 feet below the bedrock-LBFU contact to enable placement of cement seals.

If collar is present, an attempt will be made to remove it. If removal of the collar is not feasible, it will be left in the hole and perforated as needed to allow an annular seal to be placed to a depth of at least 25 feet bgs. In areas of agricultural use, the surface casing will be cut at least 5 feet bgs and removed.

If the collar cannot be removed, it will be perforated from at least 20 feet below the bedrock-LBFU contact to at least 20 feet above the contact; from at least 20 feet below the base of the MFGU to at least 20 feet above the top of the MFGU; and from at least 25 feet bgs to 5 feet bgs.

A tremie pipe will be used to place Type V cement in the open core hole from the bottom of the core hole to the top of the core hole. Cement retainers, as described above, will be used to force cement grout into the annulus and behind perforated intervals, as necessary.

If the hole has been obstructed, as much cement as possible will be placed from 100 feet below the LBFU-bedrock contact to the top of the core hole.

The volume of Type V cement will be recorded and will not be less than the estimated volume of material required to fill each interval. All cement grout will consist of Type V cement, or equivalent approved in accordance with the UIC Permit.

Certification

I certify under the penalty of law that I have personally examined and am familiar with the information submitted in this document and all attachments and that, based on my inquiry of those individuals immediately responsible for obtaining the information, I believe that the information is true, accurate, and complete. I am aware that there are significant penalties for submitting false information, including the possibliity of fine and imprisonment. (Ref. 40 CFR § 144.32)

Name and Official Title *(Please type or print)*	Signature	Date Signed
Dan Johnson, VP - General Manager		10/3/2019

INSTRUCTIONS FOR FORM 7520-19

This form replaces forms 7520-12 and 7520-14. Use this form only when work is planned or has occurred that affects the well's construction or operation as an injection well, including work on the casing, tubing or packer (or for shallow Class V wells, the subsurface fluid emplacement network). Use one form per injection well. While reports or other information developed by contractors or service companies may be attached, this form must be signed by a responsible entity as described at 40 CFR 144.32. Note: operators closing Class V wells should use Form 7520-17.

NAME, ADDRESS, PHONE AND/OR EMAIL OF PERMITTEE: Enter the name and street address, city/town, state, and ZIP code of the permittee. Also provide an email address (if available) and/or a phone number.

PERMIT OR EPA ID NUMBER: Enter the well identification number or permit number assigned to the well by the EPA or the permitting authority.

API NUMBER: Enter the number assigned by the local jurisdiction (usually a State Oil and Gas Agency) using the American Petroleum Institute standard numbering system.

FULL WELL NAME: Enter the full name of the well or project.

Enter the **STATE** and **COUNTY** where the well is located. For States that do not have counties, use the name of that State's equivalent jurisdiction at a more local level.

WELL LOCATION: Fill in the complete township, range, and section to the nearest quarter-quarter section. A township is north or south of the baseline, and a range is east or west of the principal meridian (e.g., T12N, R34W). Also include the distance, in feet, from the nearest north or south line and nearest east or west line of the quarter-section. Also, enter the **latitude** and **longitude** of the well in decimal degrees, to five or six places if possible; be sure to include a negative sign for the longitude of a well in the Western Hemisphere and a negative sign for the latitude of a well in the Southern Hemisphere.

Enter the **WELL CLASS,** i.e., the class of injection well as defined in 40 CFR 144.6.

TIMING OF THE ACTION: Check ***Notice prior to work*** if the activity has not yet occurred (i.e., is planned). Check ***Report after work*** if the activity described has already occurred. As appropriate, include the date the activity is expected to start or the date the activity was completed. (Note this may not be available, e.g., for a plugging plan submitted with a permit application.)

TYPE OF ACTION: Check the appropriate box to describe the kind of activity being reported. Check ***Well Rework*** for work that was/will be performed on the well after it has already been in operation as an injection well. Check ***Plugging and Abandonment*** to report on plans for or descriptions of final closure/plugging after use as an injection well. Check ***Conversion to a Non-Injection Well*** if the well is to be converted to something other than an injection well.

Provide a **NARRATIVE DESCRIPTION** of the work planned to be performed, or that was performed. The narrative should include a description of the main procedures planned or that occurred during the work activity. A service company report, daily report, or similar document may be attached if it includes all the requested information and is clear and legible.

For well reworks, include the following information: The reason for the well rework; depths of activity; type of activity; changes to injection well configuration, well casing, or cement behind casing; any plug added to the well and its depth; any newly drilled interval and its depth; method(s) to demonstrate that the well has mechanical integrity (as applicable); and any deviations from the approved rework plan (as applicable).

For a well plugging plan, include the following information: Reason for the well plugging; number of plugs placed, and their depths; materials used as plugs (e.g., cast iron bridge plug, cement, cement retainer); method to set plugs; and wait-on-cement times, if any. Also provide one or more cost estimates from an independent firm in the business of plugging and abandoning wells to plug the well as described in the plan.

For well plugging affidavit, include the following information: Reason for the well plugging; number of plugs placed, and their depths; materials used as plugs (e.g., cast iron bridge plug, cement, cement retainer); method to set plugs; wait-on-cement times, if any; and any deviations from the approved plugging plan (if applicable).

For conversion to a non-injection well, include the following information: Depths of activity; type of activity; changes to injection well configuration, well casing, or cement behind casing; any plug added to the well and its depth; any newly drilled interval and its depth; depths of new perforations; and method(s) to demonstrate that the well has mechanical integrity (as applicable).

For all of the above activities, include a well sketch depicting the work, results of well tests/logging performed, service company tickets, and any other available information demonstrating how the work was/is to be performed. Also, specify whether depths are below ground surface, relative to Kelly bushing, etc.

CERTIFICATION: This form must be signed and dated by either: a responsible corporate officer for a corporation, by a general partner for a partnership, by the proprietor of a sole proprietorship, or by a principal executive or ranking elected official for a public agency.

PAPERWORK REDUCTION ACT NOTICE: The public reporting and recordkeeping burden for this collection of information is estimated to average between 6.0 and 7.9 hours per response, depending on the injection well class. Burden means the total time, effort, or financial resource expended by persons to generate, maintain, retain, or disclose or provide information to or for a Federal Agency. This includes the time needed to review instructions; develop, acquire, install, and utilize technology and systems for the purposes of collecting, validating, and verifying information, processing and maintaining information, and disclosing and providing information; adjust the existing ways to comply with any previously applicable instructions and requirements; train personnel to be able to respond to the collection of information; search data sources; complete and review the collection of information; and, transmit or otherwise disclose the information. An agency may not conduct or sponsor, and a person is not required to respond to, a collection of information unless it displays a currently valid OMB control number. Send comments on the Agency's need for this information, the accuracy of the provided burden estimates, and any suggested methods for minimizing respondent burden, including the use of automated collection techniques to Director, Collection Strategies Division, U.S. Environmental Protection Agency (2822), 1200 Pennsylvania Ave., NW., Washington, D.C. 20460. Include the OMB control number in any correspondence. Do not send the completed forms to this address.

AS-BUILT COREHOLE 385MF

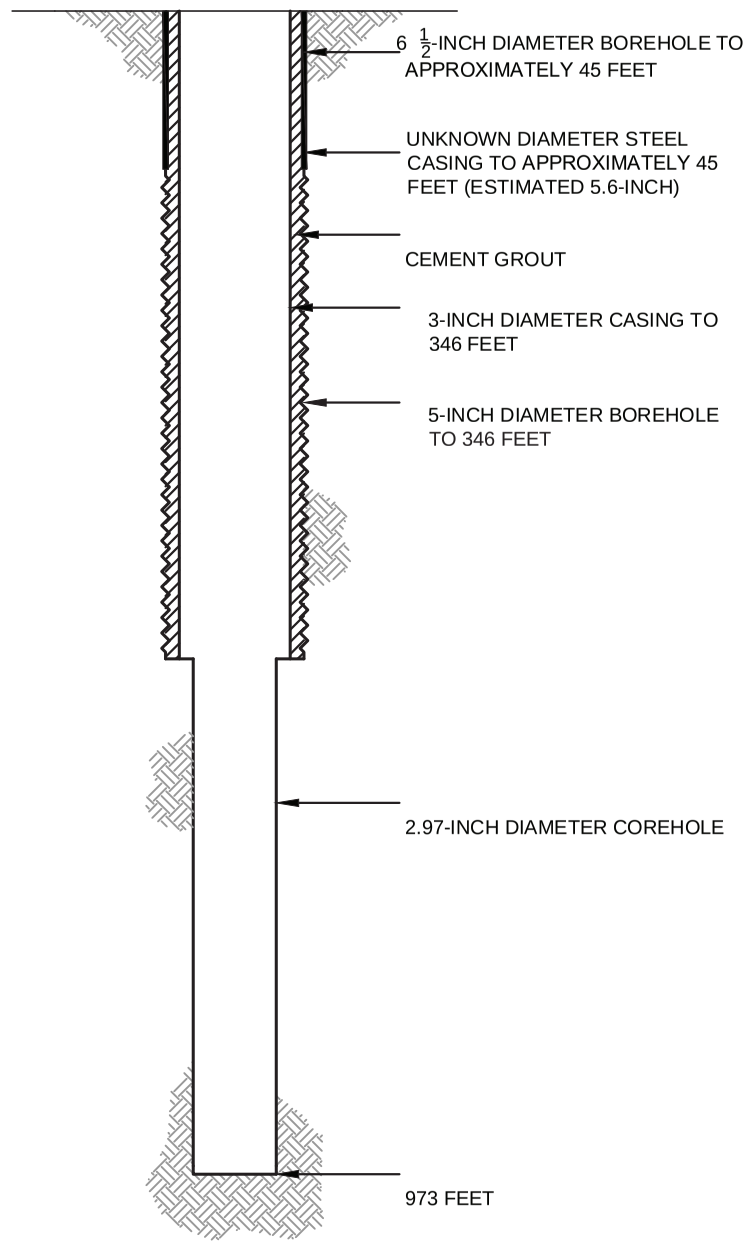

PROPOSED PLUGGING AND ABANDONMENT COREHOLE 385MF

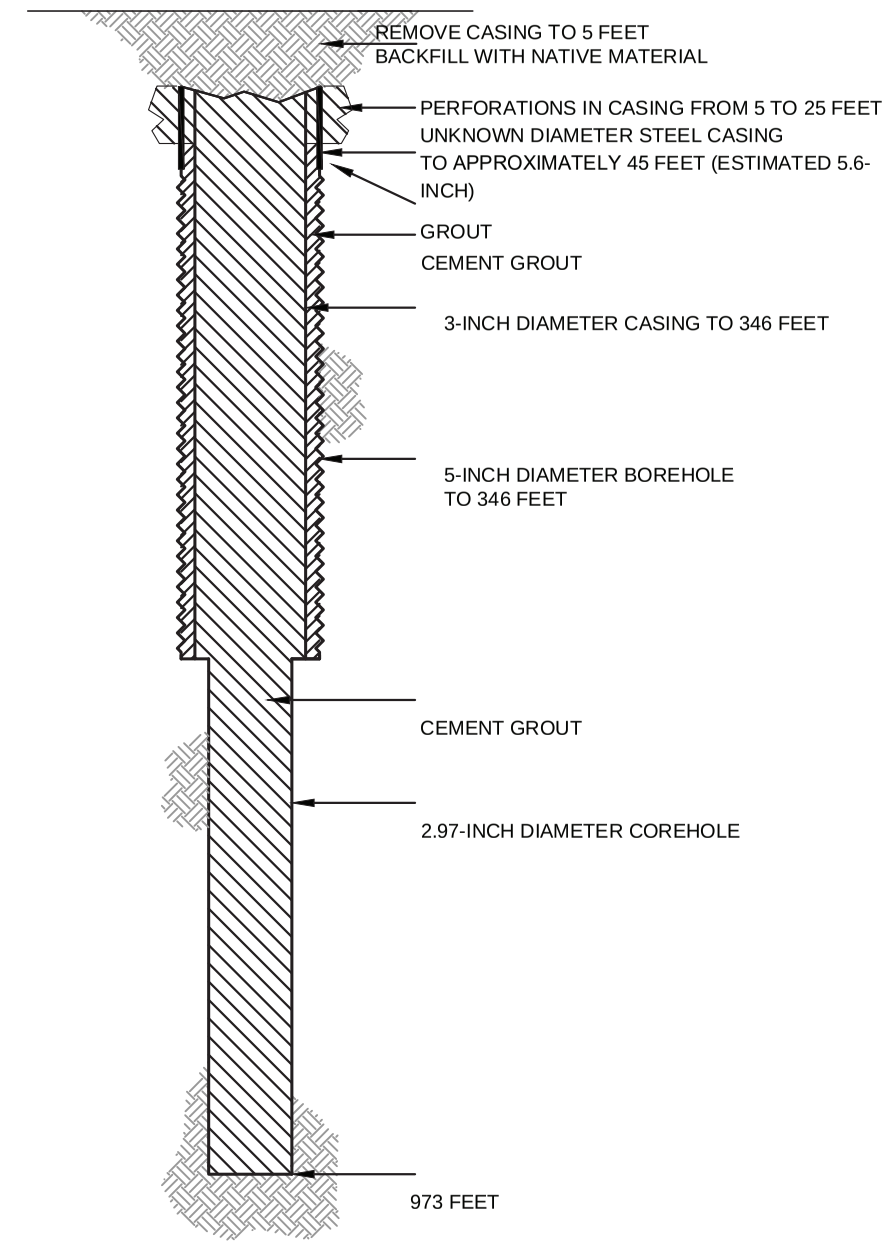

HALEY ALDRICH

FLORENCE COPPER, INC.
FLORENCE, ARIZONA

COREHOLE 385MF DIAGRAM

FLORENCE COPPER INC.

NOT TO SCALE
SEPTEMBER 2019

FIGURE 1

MOBINI, GITA Printed: 4/21/2017 12:00 PM Layout: ABANDON (2)
\PROJECTS\CURIS RESOURCES38706-CURIS FEASIBILITY\DRAWINGS\EPA\WELL ABANDON\415S_ABANDON.DWG

OMB No. 2040-0042 Approval Expires 4/30/2022

United States Environmental Protection Agency

WELL REWORK RECORD, PLUGGING AND ABANDONMENT PLAN, OR PLUGGING AND ABANDONMENT AFFIDAVIT

Name and Address, Phone Number and/or Email of Permittee

Florence Copper Project
1575 W Hunt Hwy,
Florence, AZ 85132

Permit or EPA ID Number	API Number	Full Well Name
R9UIC-AZ3-FY11-1		387MF

State	County
Arizona	Pinal

Locate well in two directions from nearest lines of quarter section and drilling unit

Latitude 33.04853824

Longitude -111.4240443

Surface Location

SE **1/4 of** SE **1/4 of Section** 28 **Township** 4S **Range** 9E

_____ **ft. from (N/S)** _____ **Line of quarter section**

_____ **ft. from (E/W)** _____ **Line of quarter section.**

Well Class	Timing of Action (pick one)	Type of Action (pick one)
☐ Class I ☐ Class II ☑ Class III ☐ Class V	☑ Notice Prior to Work Date Expected to Commence March 2021 ☐ Report After Work Date Work Ended	☐ Well Rework ☑ Plugging and Abandonment ☐ Conversion to a Non-Injection Well

Provide a narrative description of the work planned to be performed, or that was performed. Use additional pages as necessary. See instructions.

A workover rig capable of performing the required abandonment operations at the required depths will be moved in and set up over the core hole. The core hole will be inspected to determine the depth to which the hole remains open and if any obstructions are present in the core hole; the presence and condition of any existing collar will also be documented. If necessary, the core hole will be cleaned out to a depth of at least 100 feet below the bedrock-LBFU contact to enable placement of cement seals.

If collar is present, an attempt will be made to remove it. If removal of the collar is not feasible, it will be left in the hole and perforated as needed to allow an annular seal to be placed to a depth of at least 25 feet bgs. In areas of agricultural use, the surface casing will be cut at least 5 feet bgs and removed.

If the collar cannot be removed, it will be perforated from at least 20 feet below the bedrock-LBFU contact to at least 20 feet above the contact; from at least 20 feet below the base of the MFGU to at least 20 feet above the top of the MFGU; and from at least 25 feet bgs to 5 feet bgs.

A tremie pipe will be used to place Type V cement in the open core hole from the bottom of the core hole to the top of the core hole. Cement retainers, as described above, will be used to force cement grout into the annulus and behind perforated intervals, as necessary.

If the hole has been obstructed, as much cement as possible will be placed from 100 feet below the LBFU-bedrock contact to the top of the core hole.

The volume of Type V cement will be recorded and will not be less than the estimated volume of material required to fill each interval. All cement grout will consist of Type V cement, or equivalent approved in accordance with the UIC Permit.

Certification

I certify under the penalty of law that I have personally examined and am familiar with the information submitted in this document and all attachments and that, based on my inquiry of those individuals immediately responsible for obtaining the information, I believe that the information is true, accurate, and complete. I am aware that there are significant penalties for submitting false information, including the possibliity of fine and imprisonment. (Ref. 40 CFR § 144.32)

Name and Official Title *(Please type or print)*	Signature	Date Signed
Dan Johnson, VP - General Manager		10/3/2019

INSTRUCTIONS FOR FORM 7520-19

This form replaces forms 7520-12 and 7520-14. Use this form only when work is planned or has occurred that affects the well's construction or operation as an injection well, including work on the casing, tubing or packer (or for shallow Class V wells, the subsurface fluid emplacement network). Use one form per injection well. While reports or other information developed by contractors or service companies may be attached, this form must be signed by a responsible entity as described at 40 CFR 144.32. Note: operators closing Class V wells should use Form 7520-17.

NAME, ADDRESS, PHONE AND/OR EMAIL OF PERMITTEE: Enter the name and street address, city/town, state, and ZIP code of the permittee. Also provide an email address (if available) and/or a phone number.

PERMIT OR EPA ID NUMBER: Enter the well identification number or permit number assigned to the well by the EPA or the permitting authority.

API NUMBER: Enter the number assigned by the local jurisdiction (usually a State Oil and Gas Agency) using the American Petroleum Institute standard numbering system.

FULL WELL NAME: Enter the full name of the well or project.

Enter the **STATE** and **COUNTY** where the well is located. For States that do not have counties, use the name of that State's equivalent jurisdiction at a more local level.

WELL LOCATION: Fill in the complete township, range, and section to the nearest quarter-quarter section. A township is north or south of the baseline, and a range is east or west of the principal meridian (e.g., T12N, R34W). Also include the distance, in feet, from the nearest north or south line and nearest east or west line of the quarter-section. Also, enter the **latitude** and **longitude** of the well in decimal degrees, to five or six places if possible; be sure to include a negative sign for the longitude of a well in the Western Hemisphere and a negative sign for the latitude of a well in the Southern Hemisphere.

Enter the **WELL CLASS,** i.e., the class of injection well as defined in 40 CFR 144.6.

TIMING OF THE ACTION: Check ***Notice prior to work*** if the activity has not yet occurred (i.e., is planned). Check ***Report after work*** if the activity described has already occurred. As appropriate, include the date the activity is expected to start or the date the activity was completed. (Note this may not be available, e.g., for a plugging plan submitted with a permit application.)

TYPE OF ACTION: Check the appropriate box to describe the kind of activity being reported. Check ***Well Rework*** for work that was/will be performed on the well after it has already been in operation as an injection well. Check ***Plugging and Abandonment*** to report on plans for or descriptions of final closure/plugging after use as an injection well. Check ***Conversion to a Non-Injection Well*** if the well is to be converted to something other than an injection well.

Provide a **NARRATIVE DESCRIPTION** of the work planned to be performed, or that was performed. The narrative should include a description of the main procedures planned or that occurred during the work activity. A service company report, daily report, or similar document may be attached if it includes all the requested information and is clear and legible.

For well reworks, include the following information: The reason for the well rework; depths of activity; type of activity; changes to injection well configuration, well casing, or cement behind casing; any plug added to the well and its depth; any newly drilled interval and its depth; method(s) to demonstrate that the well has mechanical integrity (as applicable); and any deviations from the approved rework plan (as applicable).

For a well plugging plan, include the following information: Reason for the well plugging; number of plugs placed, and their depths; materials used as plugs (e.g., cast iron bridge plug, cement, cement retainer); method to set plugs; and wait-on-cement times, if any. Also provide one or more cost estimates from an independent firm in the business of plugging and abandoning wells to plug the well as described in the plan.

For well plugging affidavit, include the following information: Reason for the well plugging; number of plugs placed, and their depths; materials used as plugs (e.g., cast iron bridge plug, cement, cement retainer); method to set plugs; wait-on-cement times, if any; and any deviations from the approved plugging plan (if applicable).

For conversion to a non-injection well, include the following information: Depths of activity; type of activity; changes to injection well configuration, well casing, or cement behind casing; any plug added to the well and its depth; any newly drilled interval and its depth; depths of new perforations; and method(s) to demonstrate that the well has mechanical integrity (as applicable).

For all of the above activities, include a well sketch depicting the work, results of well tests/logging performed, service company tickets, and any other available information demonstrating how the work was/is to be performed. Also, specify whether depths are below ground surface, relative to Kelly bushing, etc.

CERTIFICATION: This form must be signed and dated by either: a responsible corporate officer for a corporation, by a general partner for a partnership, by the proprietor of a sole proprietorship, or by a principal executive or ranking elected official for a public agency.

PAPERWORK REDUCTION ACT NOTICE: The public reporting and recordkeeping burden for this collection of information is estimated to average between 6.0 and 7.9 hours per response, depending on the injection well class. Burden means the total time, effort, or financial resource expended by persons to generate, maintain, retain, or disclose or provide information to or for a Federal Agency. This includes the time needed to review instructions; develop, acquire, install, and utilize technology and systems for the purposes of collecting, validating, and verifying information, processing and maintaining information, and disclosing and providing information; adjust the existing ways to comply with any previously applicable instructions and requirements; train personnel to be able to respond to the collection of information; search data sources; complete and review the collection of information; and, transmit or otherwise disclose the information. An agency may not conduct or sponsor, and a person is not required to respond to, a collection of information unless it displays a currently valid OMB control number. Send comments on the Agency's need for this information, the accuracy of the provided burden estimates, and any suggested methods for minimizing respondent burden, including the use of automated collection techniques to Director, Collection Strategies Division, U.S. Environmental Protection Agency (2822), 1200 Pennsylvania Ave., NW., Washington, D.C. 20460. Include the OMB control number in any correspondence. Do not send the completed forms to this address.

AS-BUILT COREHOLE 387MF

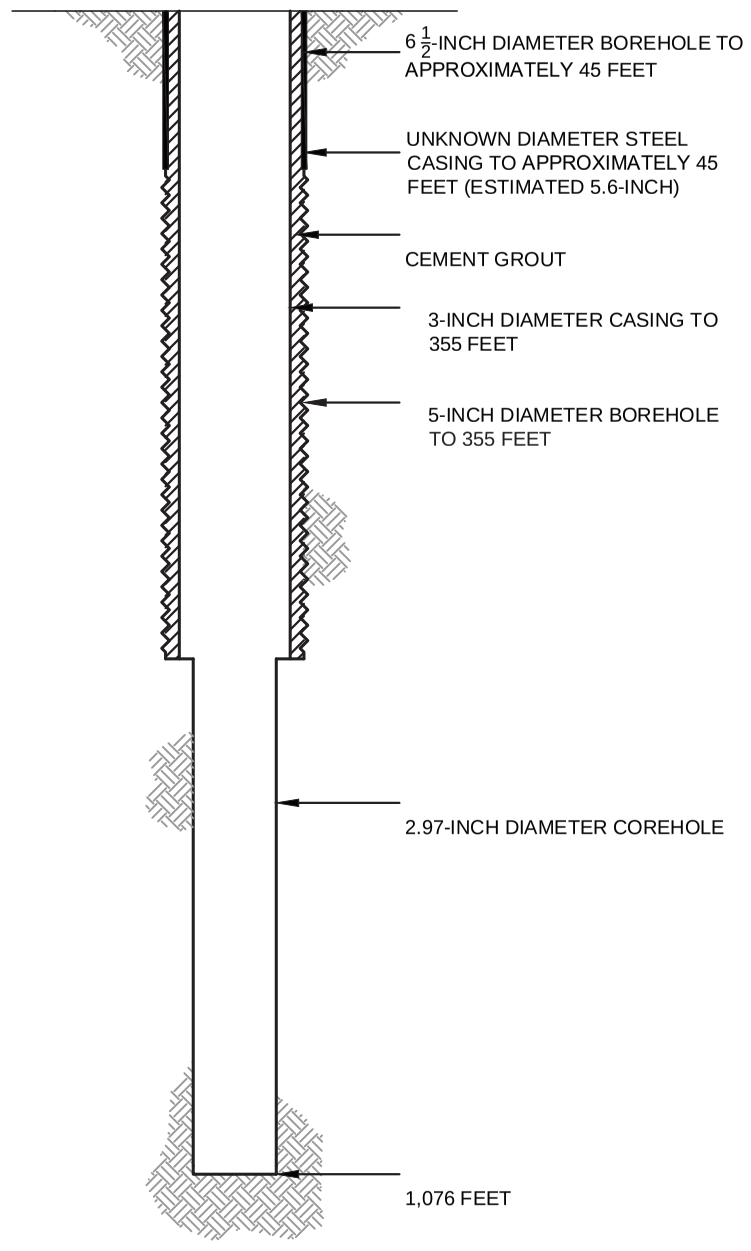

PROPOSED PLUGGING AND ABANDONMENT COREHOLE 387MF

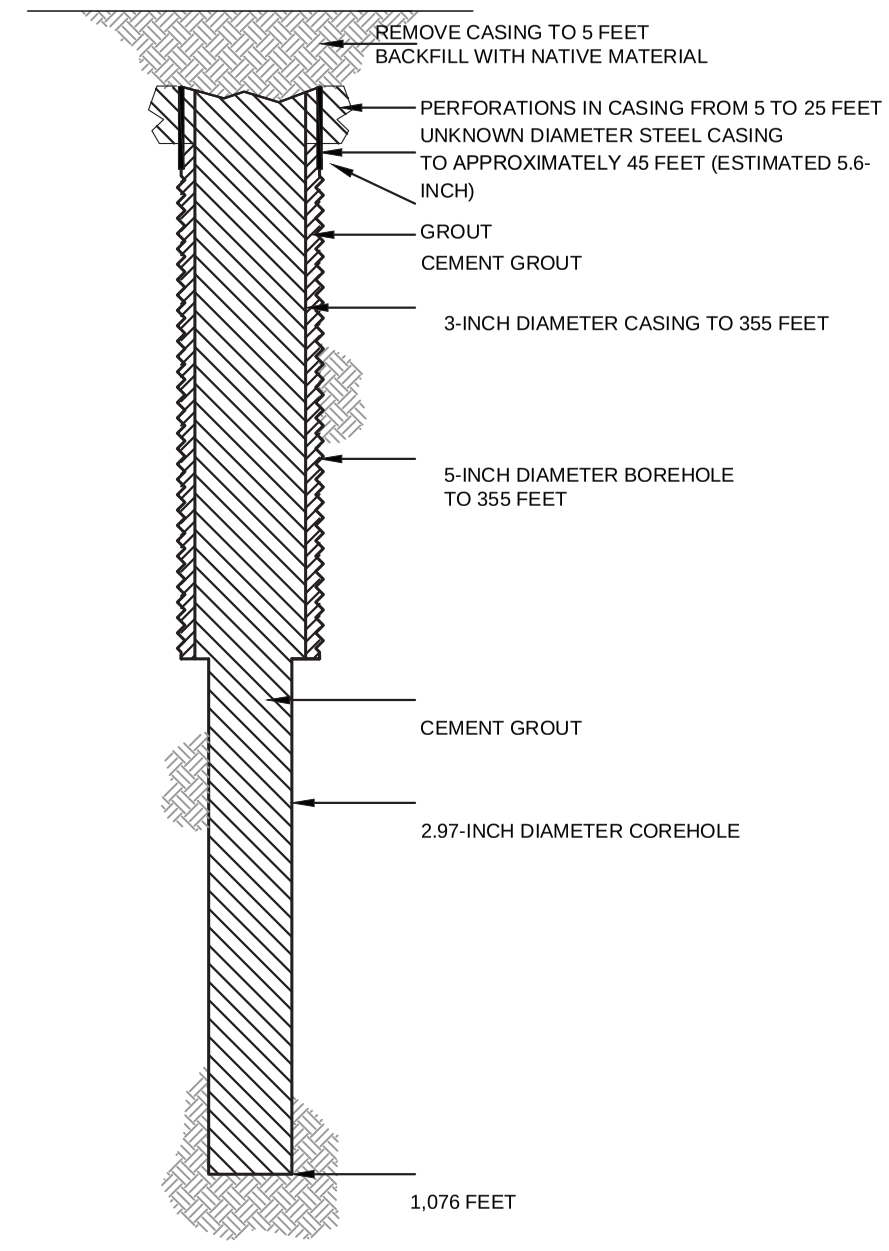

HALEY ALDRICH

FLORENCE COPPER, INC.
FLORENCE, ARIZONA

COREHOLE 387MF DIAGRAM

FLORENCE COPPER INC.

NOT TO SCALE
SEPTEMBER 2019

FIGURE 1

MOBINI, GITA Printed: 4/21/2017 12:00 PM Layout: ABANDON (2)
\PROJECTS\CURIS RESOURCES38706-CURIS FEASIBILITY\DRAWINGS\EPA\WELL ABANDON\415S_ABANDON.DWG

OMB No. 2040-0042 Approval Expires 4/30/2022

United States Environmental Protection Agency

WELL REWORK RECORD, PLUGGING AND ABANDONMENT PLAN, OR PLUGGING AND ABANDONMENT AFFIDAVIT

Name and Address, Phone Number and/or Email of Permittee

Florence Copper Project
1575 W Hunt Hwy,
Florence, AZ 85132

Permit or EPA ID Number	API Number	Full Well Name
R9UIC-AZ3-FY11-1		388MF

State	County
Arizona	Pinal

Locate well in two directions from nearest lines of quarter section and drilling unit

Surface Location

SE 1/4 of SE 1/4 of Section 28 Township 4S Range 9E

Latitude 33.04899426

Longitude -111.4236339

ft. from (N/S) Line of quarter section

ft. from (E/W) Line of quarter section.

Well Class	Timing of Action (pick one)	Type of Action (pick one)
☐ Class I ☐ Class II ☑ Class III ☐ Class V	☑ Notice Prior to Work Date Expected to Commence March 2021 ☐ Report After Work Date Work Ended	☐ Well Rework ☑ Plugging and Abandonment ☐ Conversion to a Non-Injection Well

Provide a narrative description of the work planned to be performed, or that was performed. Use additional pages as necessary. See instructions.

A workover rig capable of performing the required abandonment operations at the required depths will be moved in and set up over the core hole. The core hole will be inspected to determine the depth to which the hole remains open and if any obstructions are present in the core hole; the presence and condition of any existing collar will also be documented. If necessary, the core hole will be cleaned out to a depth of at least 100 feet below the bedrock-LBFU contact to enable placement of cement seals.

If collar is present, an attempt will be made to remove it. If removal of the collar is not feasible, it will be left in the hole and perforated as needed to allow an annular seal to be placed to a depth of at least 25 feet bgs. In areas of agricultural use, the surface casing will be cut at least 5 feet bgs and removed.

If the collar cannot be removed, it will be perforated from at least 20 feet below the bedrock-LBFU contact to at least 20 feet above the contact; from at least 20 feet below the base of the MFGU to at least 20 feet above the top of the MFGU; and from at least 25 feet bgs to 5 feet bgs.

A tremie pipe will be used to place Type V cement in the open core hole from the bottom of the core hole to the top of the core hole. Cement retainers, as described above, will be used to force cement grout into the annulus and behind perforated intervals, as necessary.

If the hole has been obstructed, as much cement as possible will be placed from 100 feet below the LBFU-bedrock contact to the top of the core hole.

The volume of Type V cement will be recorded and will not be less than the estimated volume of material required to fill each interval. All cement grout will consist of Type V cement, or equivalent approved in accordance with the UIC Permit.

Certification

I certify under the penalty of law that I have personally examined and am familiar with the information submitted in this document and all attachments and that, based on my inquiry of those individuals immediately responsible for obtaining the information, I believe that the information is true, accurate, and complete. I am aware that there are significant penalties for submitting false information, including the possibliity of fine and imprisonment. (Ref. 40 CFR § 144.32)

Name and Official Title *(Please type or print)*	Signature	Date Signed
Dan Johnson, VP - General Manager		10/3/2019

INSTRUCTIONS FOR FORM 7520-19

This form replaces forms 7520-12 and 7520-14. Use this form only when work is planned or has occurred that affects the well's construction or operation as an injection well, including work on the casing, tubing or packer (or for shallow Class V wells, the subsurface fluid emplacement network). Use one form per injection well. While reports or other information developed by contractors or service companies may be attached, this form must be signed by a responsible entity as described at 40 CFR 144.32. Note: operators closing Class V wells should use Form 7520-17.

NAME, ADDRESS, PHONE AND/OR EMAIL OF PERMITTEE: Enter the name and street address, city/town, state, and ZIP code of the permittee. Also provide an email address (if available) and/or a phone number.

PERMIT OR EPA ID NUMBER: Enter the well identification number or permit number assigned to the well by the EPA or the permitting authority.

API NUMBER: Enter the number assigned by the local jurisdiction (usually a State Oil and Gas Agency) using the American Petroleum Institute standard numbering system.

FULL WELL NAME: Enter the full name of the well or project.

Enter the **STATE** and **COUNTY** where the well is located. For States that do not have counties, use the name of that State's equivalent jurisdiction at a more local level.

WELL LOCATION: Fill in the complete township, range, and section to the nearest quarter-quarter section. A township is north or south of the baseline, and a range is east or west of the principal meridian (e.g., T12N, R34W). Also include the distance, in feet, from the nearest north or south line and nearest east or west line of the quarter-section. Also, enter the **latitude** and **longitude** of the well in decimal degrees, to five or six places if possible; be sure to include a negative sign for the longitude of a well in the Western Hemisphere and a negative sign for the latitude of a well in the Southern Hemisphere.

Enter the **WELL CLASS,** i.e., the class of injection well as defined in 40 CFR 144.6.

TIMING OF THE ACTION: Check ***Notice prior to work*** if the activity has not yet occurred (i.e., is planned). Check ***Report after work*** if the activity described has already occurred. As appropriate, include the date the activity is expected to start or the date the activity was completed. (Note this may not be available, e.g., for a plugging plan submitted with a permit application.)

TYPE OF ACTION: Check the appropriate box to describe the kind of activity being reported. Check ***Well Rework*** for work that was/will be performed on the well after it has already been in operation as an injection well. Check ***Plugging and Abandonment*** to report on plans for or descriptions of final closure/plugging after use as an injection well. Check ***Conversion to a Non-Injection Well*** if the well is to be converted to something other than an injection well.

Provide a **NARRATIVE DESCRIPTION** of the work planned to be performed, or that was performed. The narrative should include a description of the main procedures planned or that occurred during the work activity. A service company report, daily report, or similar document may be attached if it includes all the requested information and is clear and legible.

For well reworks, include the following information: The reason for the well rework; depths of activity; type of activity; changes to injection well configuration, well casing, or cement behind casing; any plug added to the well and its depth; any newly drilled interval and its depth; method(s) to demonstrate that the well has mechanical integrity (as applicable); and any deviations from the approved rework plan (as applicable).

For a well plugging plan, include the following information: Reason for the well plugging; number of plugs placed, and their depths; materials used as plugs (e.g., cast iron bridge plug, cement, cement retainer); method to set plugs; and wait-on-cement times, if any. Also provide one or more cost estimates from an independent firm in the business of plugging and abandoning wells to plug the well as described in the plan.

For well plugging affidavit, include the following information: Reason for the well plugging; number of plugs placed, and their depths; materials used as plugs (e.g., cast iron bridge plug, cement, cement retainer); method to set plugs; wait-on-cement times, if any; and any deviations from the approved plugging plan (if applicable).

For conversion to a non-injection well, include the following information: Depths of activity; type of activity; changes to injection well configuration, well casing, or cement behind casing; any plug added to the well and its depth; any newly drilled interval and its depth; depths of new perforations; and method(s) to demonstrate that the well has mechanical integrity (as applicable).

For all of the above activities, include a well sketch depicting the work, results of well tests/logging performed, service company tickets, and any other available information demonstrating how the work was/is to be performed. Also, specify whether depths are below ground surface, relative to Kelly bushing, etc.

CERTIFICATION: This form must be signed and dated by either: a responsible corporate officer for a corporation, by a general partner for a partnership, by the proprietor of a sole proprietorship, or by a principal executive or ranking elected official for a public agency.

PAPERWORK REDUCTION ACT NOTICE: The public reporting and recordkeeping burden for this collection of information is estimated to average between 6.0 and 7.9 hours per response, depending on the injection well class. Burden means the total time, effort, or financial resource expended by persons to generate, maintain, retain, or disclose or provide information to or for a Federal Agency. This includes the time needed to review instructions; develop, acquire, install, and utilize technology and systems for the purposes of collecting, validating, and verifying information, processing and maintaining information, and disclosing and providing information; adjust the existing ways to comply with any previously applicable instructions and requirements; train personnel to be able to respond to the collection of information; search data sources; complete and review the collection of information; and, transmit or otherwise disclose the information. An agency may not conduct or sponsor, and a person is not required to respond to, a collection of information unless it displays a currently valid OMB control number. Send comments on the Agency's need for this information, the accuracy of the provided burden estimates, and any suggested methods for minimizing respondent burden, including the use of automated collection techniques to Director, Collection Strategies Division, U.S. Environmental Protection Agency (2822), 1200 Pennsylvania Ave., NW., Washington, D.C. 20460. Include the OMB control number in any correspondence. Do not send the completed forms to this address.

AS-BUILT COREHOLE 388MF

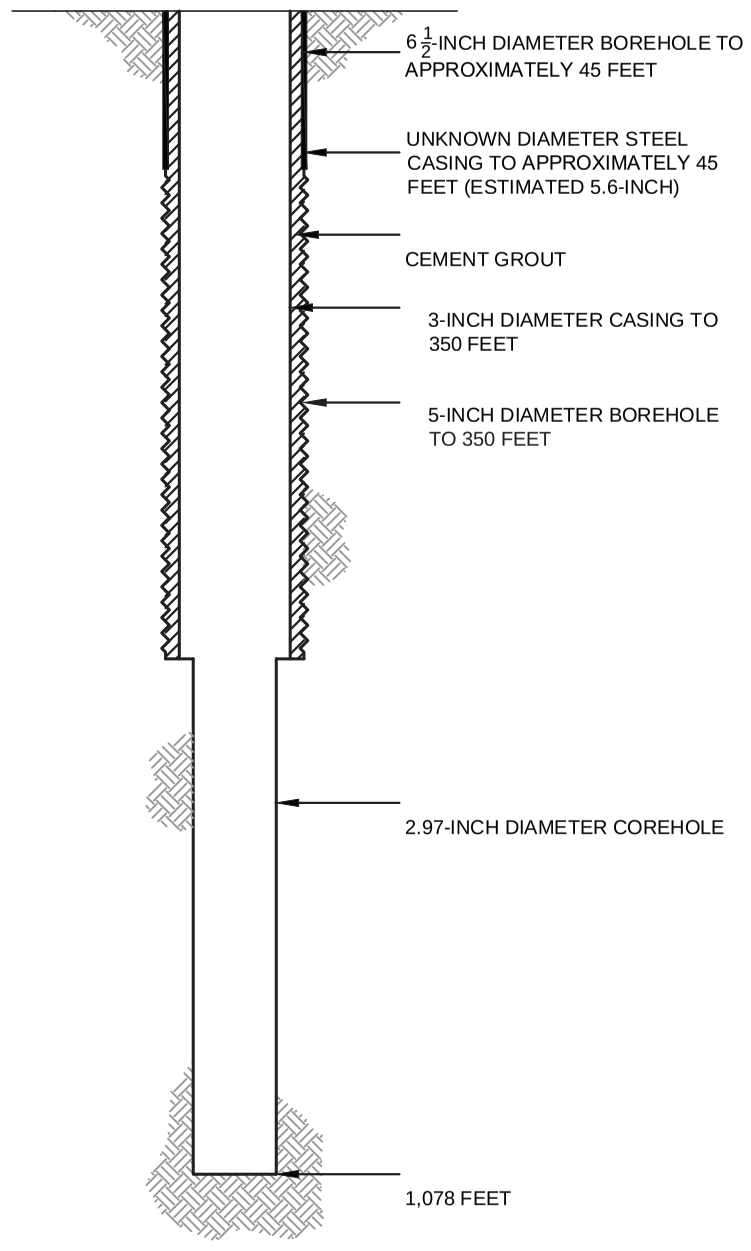

PROPOSED PLUGGING AND ABANDONMENT COREHOLE 388MF

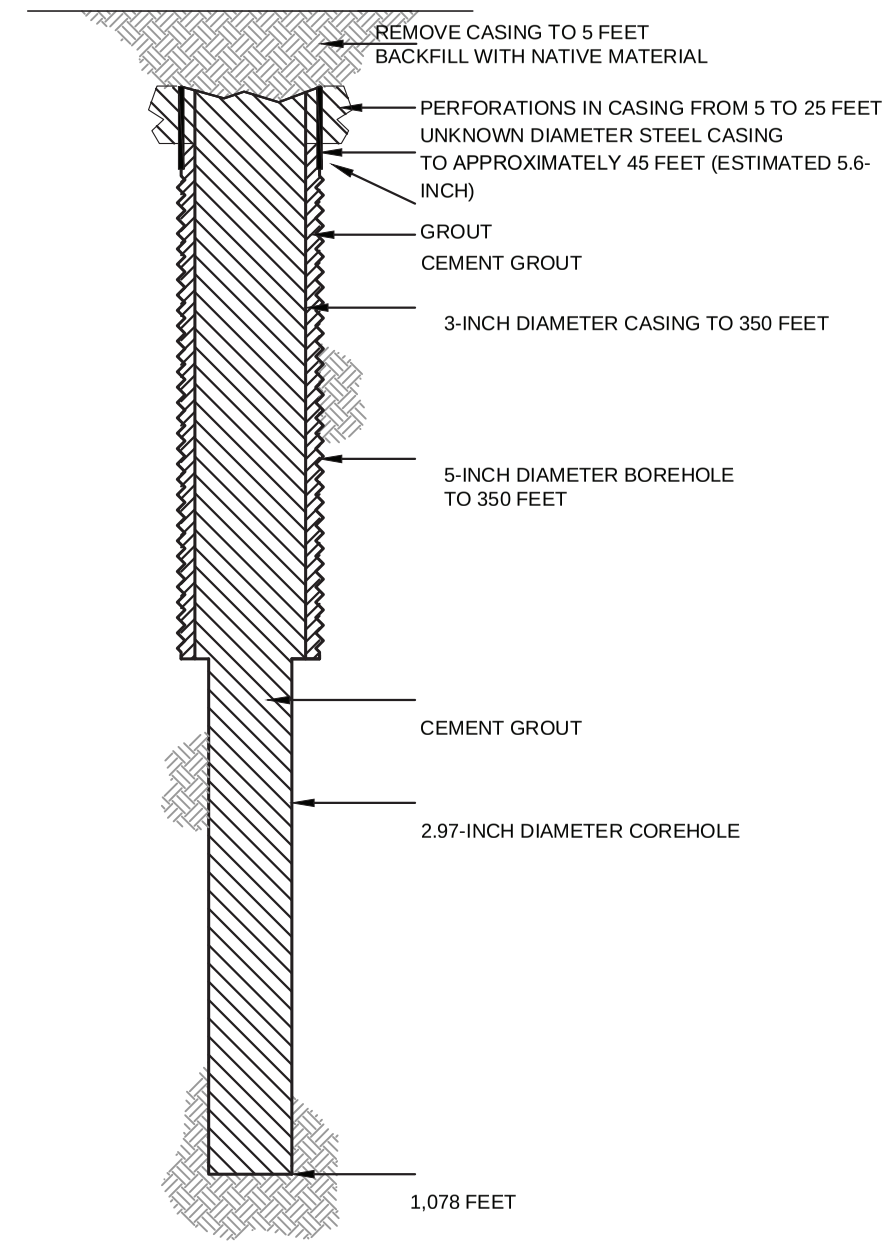

HALEY ALDRICH

FLORENCE COPPER, INC.
FLORENCE, ARIZONA

COREHOLE 388MF DIAGRAM

FLORENCE COPPER INC.

NOT TO SCALE
SEPTEMBER 2019

FIGURE 1

MOBINI, GITA Printed: 4/21/2017 12:00 PM Layout: ABANDON (2)
\PROJECTS\CURIS RESOURCES38706-CURIS FEASIBILITY\DRAWINGS\EPA\WELL ABANDON\415S_ABANDON.DWG

OMB No. 2040-0042 Approval Expires 4/30/2022

United States Environmental Protection Agency

WELL REWORK RECORD, PLUGGING AND ABANDONMENT PLAN, OR PLUGGING AND ABANDONMENT AFFIDAVIT

Name and Address, Phone Number and/or Email of Permittee

Florence Copper Project
1575 W Hunt Hwy,
Florence, AZ 85132

Permit or EPA ID Number	API Number	Full Well Name
R9UIC-AZ3-FY11-1		394MF

State	County
Arizona	Pinal

Locate well in two directions from nearest lines of quarter section and drilling unit

Latitude 33.04616443

Longitude -111.4256893

Surface Location

SW **1/4 of** SE **1/4 of Section** 28 **Township** 4S **Range** 9E

_____ **ft. from (N/S)** _____ **Line of quarter section**

_____ **ft. from (E/W)** _____ **Line of quarter section.**

Well Class	Timing of Action (pick one)	Type of Action (pick one)
☐ Class I ☐ Class II ☑ Class III ☐ Class V	☑ Notice Prior to Work Date Expected to Commence March 2021 ☐ Report After Work Date Work Ended	☐ Well Rework ☑ Plugging and Abandonment ☐ Conversion to a Non-Injection Well

Provide a narrative description of the work planned to be performed, or that was performed. Use additional pages as necessary. See instructions.

A workover rig capable of performing the required abandonment operations at the required depths will be moved in and set up over the core hole. The core hole will be inspected to determine the depth to which the hole remains open and if any obstructions are present in the core hole; the presence and condition of any existing collar will also be documented. If necessary, the core hole will be cleaned out to a depth of at least 100 feet below the bedrock-LBFU contact to enable placement of cement seals.

If collar is present, an attempt will be made to remove it. If removal of the collar is not feasible, it will be left in the hole and perforated as needed to allow an annular seal to be placed to a depth of at least 25 feet bgs. In areas of agricultural use, the surface casing will be cut at least 5 feet bgs and removed.

If the collar cannot be removed, it will be perforated from at least 20 feet below the bedrock-LBFU contact to at least 20 feet above the contact; from at least 20 feet below the base of the MFGU to at least 20 feet above the top of the MFGU; and from at least 25 feet bgs to 5 feet bgs.

A tremie pipe will be used to place Type V cement in the open core hole from the bottom of the core hole to the top of the core hole. Cement retainers, as described above, will be used to force cement grout into the annulus and behind perforated intervals, as necessary.

If the hole has been obstructed, as much cement as possible will be placed from 100 feet below the LBFU-bedrock contact to the top of the core hole.

The volume of Type V cement will be recorded and will not be less than the estimated volume of material required to fill each interval. All cement grout will consist of Type V cement, or equivalent approved in accordance with the UIC Permit.

Certification

I certify under the penalty of law that I have personally examined and am familiar with the information submitted in this document and all attachments and that, based on my inquiry of those individuals immediately responsible for obtaining the information, I believe that the information is true, accurate, and complete. I am aware that there are significant penalties for submitting false information, including the possibliity of fine and imprisonment. (Ref. 40 CFR § 144.32)

Name and Official Title *(Please type or print)*	Signature	Date Signed
Dan Johnson, VP - General Manager		10/3/2019

INSTRUCTIONS FOR FORM 7520-19

This form replaces forms 7520-12 and 7520-14. Use this form only when work is planned or has occurred that affects the well's construction or operation as an injection well, including work on the casing, tubing or packer (or for shallow Class V wells, the subsurface fluid emplacement network). Use one form per injection well. While reports or other information developed by contractors or service companies may be attached, this form must be signed by a responsible entity as described at 40 CFR 144.32. Note: operators closing Class V wells should use Form 7520-17.

NAME, ADDRESS, PHONE AND/OR EMAIL OF PERMITTEE: Enter the name and street address, city/town, state, and ZIP code of the permittee. Also provide an email address (if available) and/or a phone number.

PERMIT OR EPA ID NUMBER: Enter the well identification number or permit number assigned to the well by the EPA or the permitting authority.

API NUMBER: Enter the number assigned by the local jurisdiction (usually a State Oil and Gas Agency) using the American Petroleum Institute standard numbering system.

FULL WELL NAME: Enter the full name of the well or project.

Enter the **STATE** and **COUNTY** where the well is located. For States that do not have counties, use the name of that State's equivalent jurisdiction at a more local level.

WELL LOCATION: Fill in the complete township, range, and section to the nearest quarter-quarter section. A township is north or south of the baseline, and a range is east or west of the principal meridian (e.g., T12N, R34W). Also include the distance, in feet, from the nearest north or south line and nearest east or west line of the quarter-section. Also, enter the **latitude** and **longitude** of the well in decimal degrees, to five or six places if possible; be sure to include a negative sign for the longitude of a well in the Western Hemisphere and a negative sign for the latitude of a well in the Southern Hemisphere.

Enter the **WELL CLASS,** i.e., the class of injection well as defined in 40 CFR 144.6.

TIMING OF THE ACTION: Check ***Notice prior to work*** if the activity has not yet occurred (i.e., is planned). Check ***Report after work*** if the activity described has already occurred. As appropriate, include the date the activity is expected to start or the date the activity was completed. (Note this may not be available, e.g., for a plugging plan submitted with a permit application.)

TYPE OF ACTION: Check the appropriate box to describe the kind of activity being reported. Check ***Well Rework*** for work that was/will be performed on the well after it has already been in operation as an injection well. Check ***Plugging and Abandonment*** to report on plans for or descriptions of final closure/plugging after use as an injection well. Check ***Conversion to a Non-Injection Well*** if the well is to be converted to something other than an injection well.

Provide a **NARRATIVE DESCRIPTION** of the work planned to be performed, or that was performed. The narrative should include a description of the main procedures planned or that occurred during the work activity. A service company report, daily report, or similar document may be attached if it includes all the requested information and is clear and legible.

For well reworks, include the following information: The reason for the well rework; depths of activity; type of activity; changes to injection well configuration, well casing, or cement behind casing; any plug added to the well and its depth; any newly drilled interval and its depth; method(s) to demonstrate that the well has mechanical integrity (as applicable); and any deviations from the approved rework plan (as applicable).

For a well plugging plan, include the following information: Reason for the well plugging; number of plugs placed, and their depths; materials used as plugs (e.g., cast iron bridge plug, cement, cement retainer); method to set plugs; and wait-on-cement times, if any. Also provide one or more cost estimates from an independent firm in the business of plugging and abandoning wells to plug the well as described in the plan.

For well plugging affidavit, include the following information: Reason for the well plugging; number of plugs placed, and their depths; materials used as plugs (e.g., cast iron bridge plug, cement, cement retainer); method to set plugs; wait-on-cement times, if any; and any deviations from the approved plugging plan (if applicable).

For conversion to a non-injection well, include the following information: Depths of activity; type of activity; changes to injection well configuration, well casing, or cement behind casing; any plug added to the well and its depth; any newly drilled interval and its depth; depths of new perforations; and method(s) to demonstrate that the well has mechanical integrity (as applicable).

For all of the above activities, include a well sketch depicting the work, results of well tests/logging performed, service company tickets, and any other available information demonstrating how the work was/is to be performed. Also, specify whether depths are below ground surface, relative to Kelly bushing, etc.

CERTIFICATION: This form must be signed and dated by either: a responsible corporate officer for a corporation, by a general partner for a partnership, by the proprietor of a sole proprietorship, or by a principal executive or ranking elected official for a public agency.

PAPERWORK REDUCTION ACT NOTICE: The public reporting and recordkeeping burden for this collection of information is estimated to average between 6.0 and 7.9 hours per response, depending on the injection well class. Burden means the total time, effort, or financial resource expended by persons to generate, maintain, retain, or disclose or provide information to or for a Federal Agency. This includes the time needed to review instructions; develop, acquire, install, and utilize technology and systems for the purposes of collecting, validating, and verifying information, processing and maintaining information, and disclosing and providing information; adjust the existing ways to comply with any previously applicable instructions and requirements; train personnel to be able to respond to the collection of information; search data sources; complete and review the collection of information; and, transmit or otherwise disclose the information. An agency may not conduct or sponsor, and a person is not required to respond to, a collection of information unless it displays a currently valid OMB control number. Send comments on the Agency's need for this information, the accuracy of the provided burden estimates, and any suggested methods for minimizing respondent burden, including the use of automated collection techniques to Director, Collection Strategies Division, U.S. Environmental Protection Agency (2822), 1200 Pennsylvania Ave., NW., Washington, D.C. 20460. Include the OMB control number in any correspondence. Do not send the completed forms to this address.

AS-BUILT COREHOLE 394MF

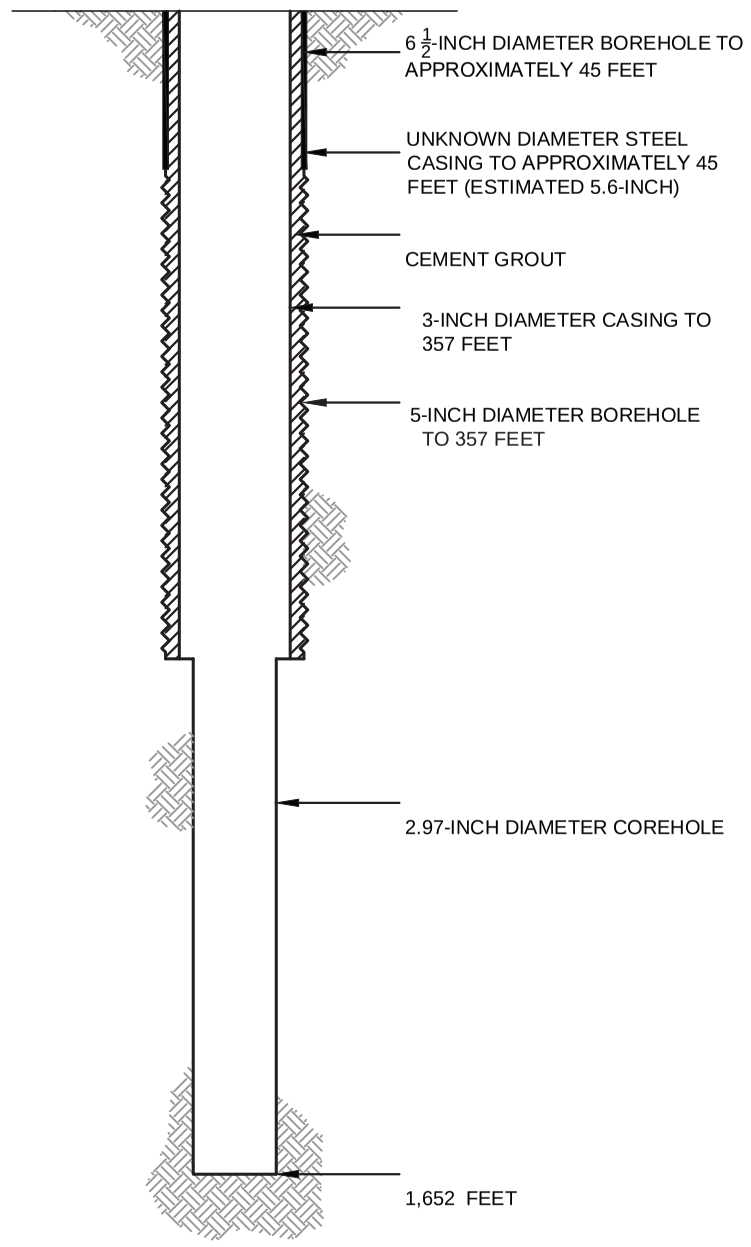

PROPOSED PLUGGING AND ABANDONMENT COREHOLE 394MF

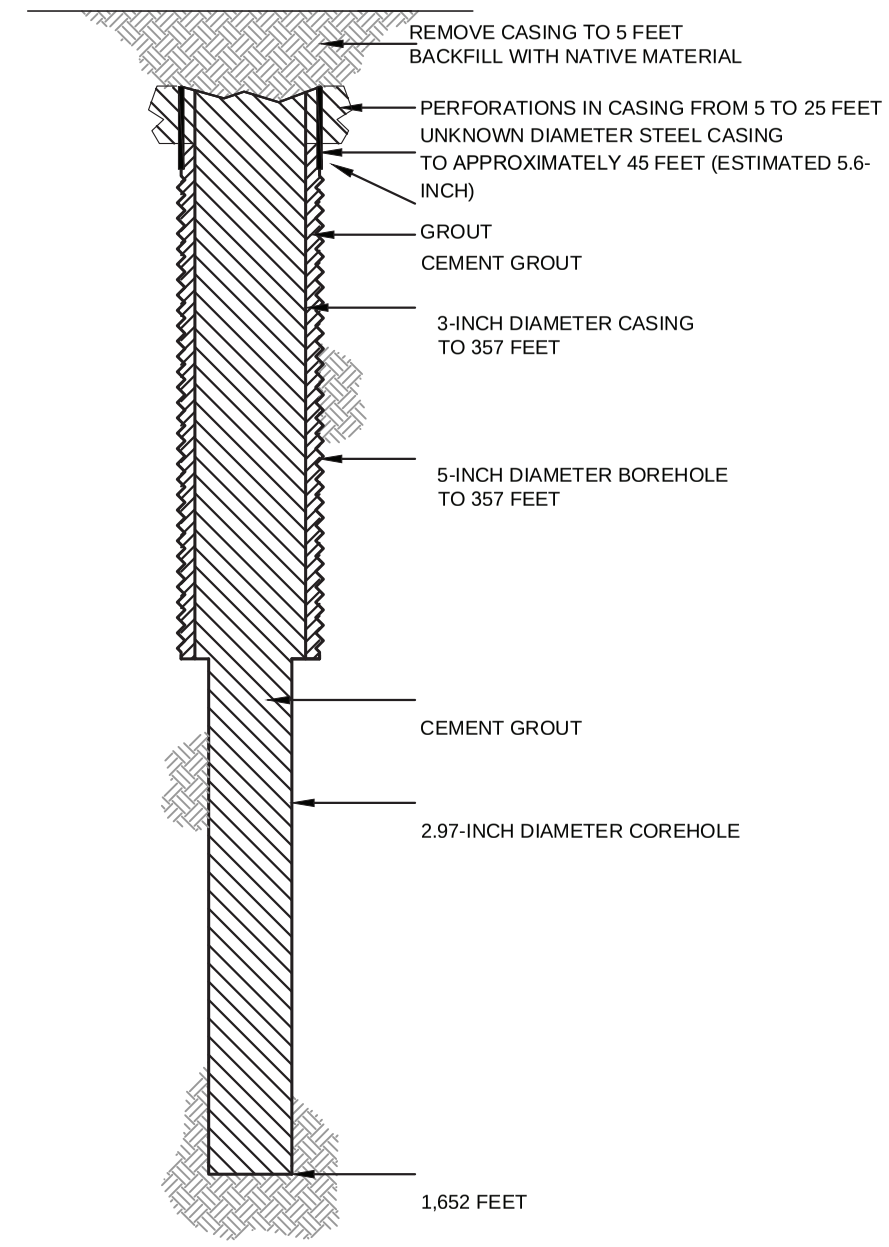

HALEY ALDRICH

FLORENCE COPPER, INC.
FLORENCE, ARIZONA

COREHOLE 394MF DIAGRAM

FLORENCE COPPER INC.

NOT TO SCALE
SEPTEMBER 2019

FIGURE 1

MOBINI, GITA Printed: 4/21/2017 12:00 PM Layout: ABANDON (2)
G:\PROJECTS\CURIS RESOURCES\38706-CURIS FEASIBILITY\DRAWINGS\EPA\WELL ABANDON\415S_ABANDON.DWG

OMB No. 2040-0042 Approval Expires 4/30/2022

United States Environmental Protection Agency

WELL REWORK RECORD, PLUGGING AND ABANDONMENT PLAN, OR PLUGGING AND ABANDONMENT AFFIDAVIT

Name and Address, Phone Number and/or Email of Permittee

Florence Copper Project
1575 W Hunt Hwy,
Florence, AZ 85132

Permit or EPA ID Number	API Number	Full Well Name
R9UIC-AZ3-FY11-1		395MF

State	County
Arizona	Pinal

Locate well in two directions from nearest lines of quarter section and drilling unit

Latitude 33.04735134

Longitude -111.4248668

Surface Location

SE **1/4 of** SE **1/4 of Section** 28 **Township** 4S **Range** 9E

_____ **ft. from (N/S)** _____ **Line of quarter section**

_____ **ft. from (E/W)** _____ **Line of quarter section.**

Well Class	Timing of Action (pick one)	Type of Action (pick one)
☐ Class I ☐ Class II ☑ Class III ☐ Class V	☑ Notice Prior to Work Date Expected to Commence March 2021 ☐ Report After Work Date Work Ended	☐ Well Rework ☑ Plugging and Abandonment ☐ Conversion to a Non-Injection Well

Provide a narrative description of the work planned to be performed, or that was performed. Use additional pages as necessary. See instructions.

A workover rig capable of performing the required abandonment operations at the required depths will be moved in and set up over the core hole. The core hole will be inspected to determine the depth to which the hole remains open and if any obstructions are present in the core hole; the presence and condition of any existing collar will also be documented. If necessary, the core hole will be cleaned out to a depth of at least 100 feet below the bedrock-LBFU contact to enable placement of cement seals.

If collar is present, an attempt will be made to remove it. If removal of the collar is not feasible, it will be left in the hole and perforated as needed to allow an annular seal to be placed to a depth of at least 25 feet bgs. In areas of agricultural use, the surface casing will be cut at least 5 feet bgs and removed.

If the collar cannot be removed, it will be perforated from at least 20 feet below the bedrock-LBFU contact to at least 20 feet above the contact; from at least 20 feet below the base of the MFGU to at least 20 feet above the top of the MFGU; and from at least 25 feet bgs to 5 feet bgs.

A tremie pipe will be used to place Type V cement in the open core hole from the bottom of the core hole to the top of the core hole. Cement retainers, as described above, will be used to force cement grout into the annulus and behind perforated intervals, as necessary.

If the hole has been obstructed, as much cement as possible will be placed from 100 feet below the LBFU-bedrock contact to the top of the core hole.

The volume of Type V cement will be recorded and will not be less than the estimated volume of material required to fill each interval. All cement grout will consist of Type V cement, or equivalent approved in accordance with the UIC Permit.

Certification

I certify under the penalty of law that I have personally examined and am familiar with the information submitted in this document and all attachments and that, based on my inquiry of those individuals immediately responsible for obtaining the information, I believe that the information is true, accurate, and complete. I am aware that there are significant penalties for submitting false information, including the possibliity of fine and imprisonment. (Ref. 40 CFR § 144.32)

Name and Official Title *(Please type or print)*	Signature	Date Signed
Dan Johnson, VP - General Manager		10/3/2019

INSTRUCTIONS FOR FORM 7520-19

This form replaces forms 7520-12 and 7520-14. Use this form only when work is planned or has occurred that affects the well's construction or operation as an injection well, including work on the casing, tubing or packer (or for shallow Class V wells, the subsurface fluid emplacement network). Use one form per injection well. While reports or other information developed by contractors or service companies may be attached, this form must be signed by a responsible entity as described at 40 CFR 144.32. Note: operators closing Class V wells should use Form 7520-17.

NAME, ADDRESS, PHONE AND/OR EMAIL OF PERMITTEE: Enter the name and street address, city/town, state, and ZIP code of the permittee. Also provide an email address (if available) and/or a phone number.

PERMIT OR EPA ID NUMBER: Enter the well identification number or permit number assigned to the well by the EPA or the permitting authority.

API NUMBER: Enter the number assigned by the local jurisdiction (usually a State Oil and Gas Agency) using the American Petroleum Institute standard numbering system.

FULL WELL NAME: Enter the full name of the well or project.

Enter the **STATE** and **COUNTY** where the well is located. For States that do not have counties, use the name of that State's equivalent jurisdiction at a more local level.

WELL LOCATION: Fill in the complete township, range, and section to the nearest quarter-quarter section. A township is north or south of the baseline, and a range is east or west of the principal meridian (e.g., T12N, R34W). Also include the distance, in feet, from the nearest north or south line and nearest east or west line of the quarter-section. Also, enter the **latitude** and **longitude** of the well in decimal degrees, to five or six places if possible; be sure to include a negative sign for the longitude of a well in the Western Hemisphere and a negative sign for the latitude of a well in the Southern Hemisphere.

Enter the **WELL CLASS,** i.e., the class of injection well as defined in 40 CFR 144.6.

TIMING OF THE ACTION: Check ***Notice prior to work*** if the activity has not yet occurred (i.e., is planned). Check ***Report after work*** if the activity described has already occurred. As appropriate, include the date the activity is expected to start or the date the activity was completed. (Note this may not be available, e.g., for a plugging plan submitted with a permit application.)

TYPE OF ACTION: Check the appropriate box to describe the kind of activity being reported. Check ***Well Rework*** for work that was/will be performed on the well after it has already been in operation as an injection well. Check ***Plugging and Abandonment*** to report on plans for or descriptions of final closure/plugging after use as an injection well. Check ***Conversion to a Non-Injection Well*** if the well is to be converted to something other than an injection well.

Provide a **NARRATIVE DESCRIPTION** of the work planned to be performed, or that was performed. The narrative should include a description of the main procedures planned or that occurred during the work activity. A service company report, daily report, or similar document may be attached if it includes all the requested information and is clear and legible.

For well reworks, include the following information: The reason for the well rework; depths of activity; type of activity; changes to injection well configuration, well casing, or cement behind casing; any plug added to the well and its depth; any newly drilled interval and its depth; method(s) to demonstrate that the well has mechanical integrity (as applicable); and any deviations from the approved rework plan (as applicable).

For a well plugging plan, include the following information: Reason for the well plugging; number of plugs placed, and their depths; materials used as plugs (e.g., cast iron bridge plug, cement, cement retainer); method to set plugs; and wait-on-cement times, if any. Also provide one or more cost estimates from an independent firm in the business of plugging and abandoning wells to plug the well as described in the plan.

For well plugging affidavit, include the following information: Reason for the well plugging; number of plugs placed, and their depths; materials used as plugs (e.g., cast iron bridge plug, cement, cement retainer); method to set plugs; wait-on-cement times, if any; and any deviations from the approved plugging plan (if applicable).

For conversion to a non-injection well, include the following information: Depths of activity; type of activity; changes to injection well configuration, well casing, or cement behind casing; any plug added to the well and its depth; any newly drilled interval and its depth; depths of new perforations; and method(s) to demonstrate that the well has mechanical integrity (as applicable).

For all of the above activities, include a well sketch depicting the work, results of well tests/logging performed, service company tickets, and any other available information demonstrating how the work was/is to be performed. Also, specify whether depths are below ground surface, relative to Kelly bushing, etc.

CERTIFICATION: This form must be signed and dated by either: a responsible corporate officer for a corporation, by a general partner for a partnership, by the proprietor of a sole proprietorship, or by a principal executive or ranking elected official for a public agency.

PAPERWORK REDUCTION ACT NOTICE: The public reporting and recordkeeping burden for this collection of information is estimated to average between 6.0 and 7.9 hours per response, depending on the injection well class. Burden means the total time, effort, or financial resource expended by persons to generate, maintain, retain, or disclose or provide information to or for a Federal Agency. This includes the time needed to review instructions; develop, acquire, install, and utilize technology and systems for the purposes of collecting, validating, and verifying information, processing and maintaining information, and disclosing and providing information; adjust the existing ways to comply with any previously applicable instructions and requirements; train personnel to be able to respond to the collection of information; search data sources; complete and review the collection of information; and, transmit or otherwise disclose the information. An agency may not conduct or sponsor, and a person is not required to respond to, a collection of information unless it displays a currently valid OMB control number. Send comments on the Agency's need for this information, the accuracy of the provided burden estimates, and any suggested methods for minimizing respondent burden, including the use of automated collection techniques to Director, Collection Strategies Division, U.S. Environmental Protection Agency (2822), 1200 Pennsylvania Ave., NW., Washington, D.C. 20460. Include the OMB control number in any correspondence. Do not send the completed forms to this address.

AS-BUILT COREHOLE 395MF

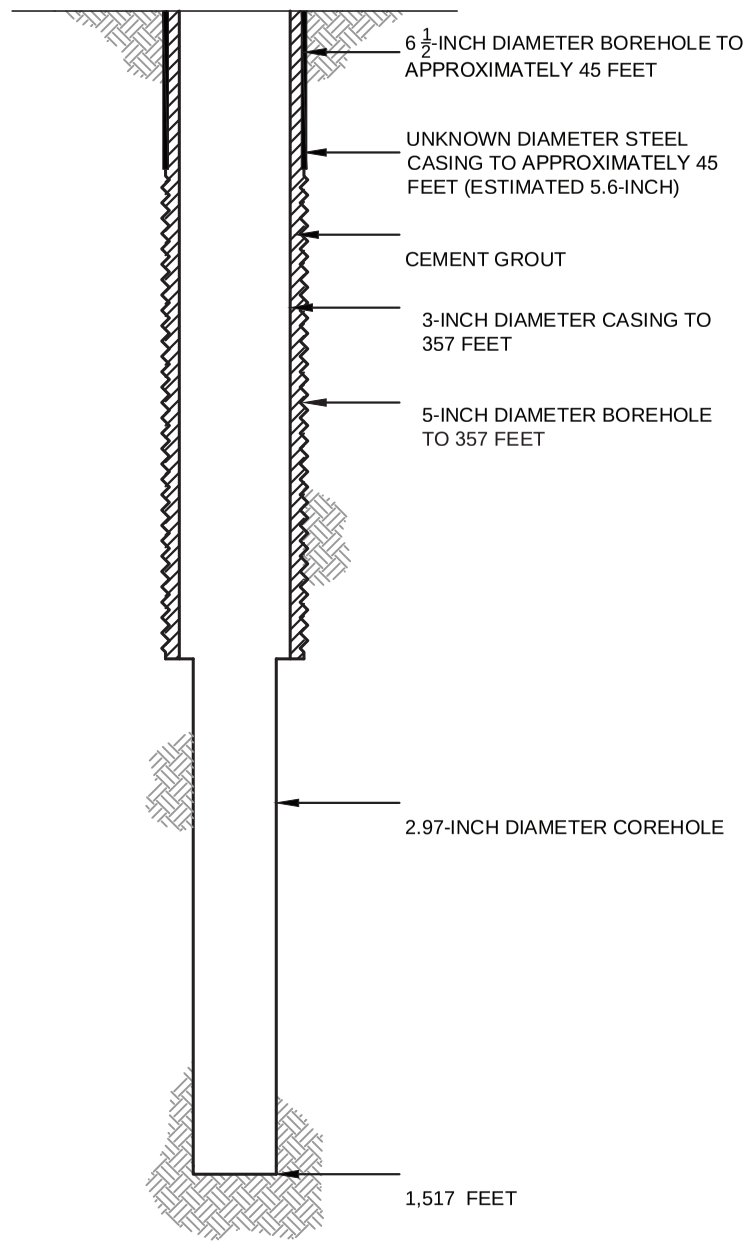

PROPOSED PLUGGING AND ABANDONMENT COREHOLE 395MF

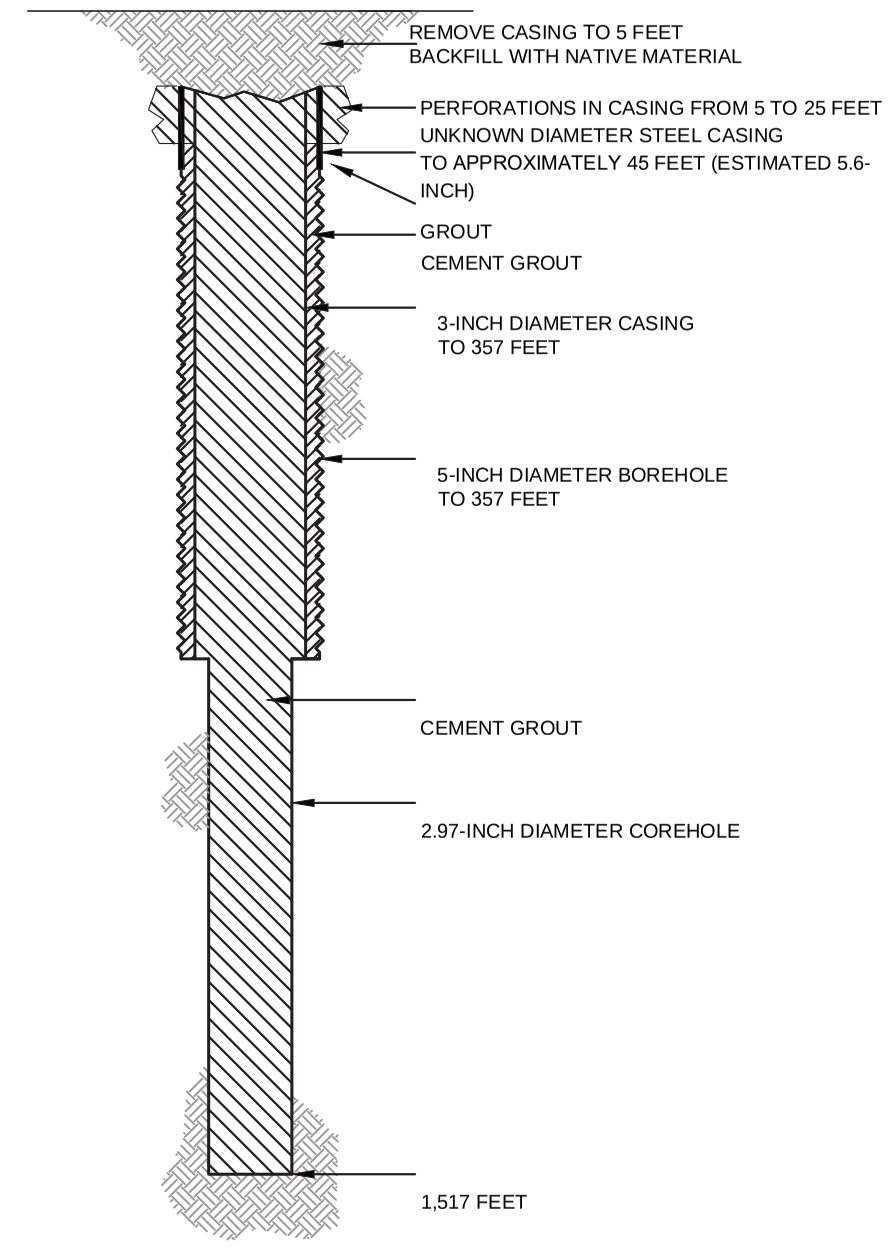

HALEY ALDRICH

FLORENCE COPPER, INC.
FLORENCE, ARIZONA

COREHOLE 395MF DIAGRAM

FLORENCE COPPER INC.

NOT TO SCALE
SEPTEMBER 2019

FIGURE 1

MOBINI, GITA Printed: 4/21/2017 12:00 PM Layout: ABANDON (2)
G:\PROJECTS\CURIS RESOURCES\38706-CURIS FEASIBILITY\DRAWINGS\EPA\WELL ABANDON\415S_ABANDON.DWG

OMB No. 2040-0042 Approval Expires 4/30/2022

United States Environmental Protection Agency

WELL REWORK RECORD, PLUGGING AND ABANDONMENT PLAN, OR PLUGGING AND ABANDONMENT AFFIDAVIT

Name and Address, Phone Number and/or Email of Permittee

Florence Copper Project
1575 W Hunt Hwy,
Florence, AZ 85132

Permit or EPA ID Number	API Number	Full Well Name
R9UIC-AZ3-FY11-1		396MF

State	County
Arizona	Pinal

Locate well in two directions from nearest lines of quarter section and drilling unit

Surface Location

SE 1/4 of SE 1/4 of Section 28 Township 4S Range 9E

Latitude 33.04899104

Longitude -111.422818

_____ ft. from (N/S) _____ Line of quarter section

_____ ft. from (E/W) _____ Line of quarter section.

Well Class	Timing of Action (pick one)	Type of Action (pick one)
☐ Class I ☐ Class II ☑ Class III ☐ Class V	☑ Notice Prior to Work Date Expected to Commence March 2021 ☐ Report After Work Date Work Ended	☐ Well Rework ☑ Plugging and Abandonment ☐ Conversion to a Non-Injection Well

Provide a narrative description of the work planned to be performed, or that was performed. Use additional pages as necessary. See instructions.

A workover rig capable of performing the required abandonment operations at the required depths will be moved in and set up over the core hole. The core hole will be inspected to determine the depth to which the hole remains open and if any obstructions are present in the core hole; the presence and condition of any existing collar will also be documented. If necessary, the core hole will be cleaned out to a depth of at least 100 feet below the bedrock-LBFU contact to enable placement of cement seals.

If collar is present, an attempt will be made to remove it. If removal of the collar is not feasible, it will be left in the hole and perforated as needed to allow an annular seal to be placed to a depth of at least 25 feet bgs. In areas of agricultural use, the surface casing will be cut at least 5 feet bgs and removed.

If the collar cannot be removed, it will be perforated from at least 20 feet below the bedrock-LBFU contact to at least 20 feet above the contact; from at least 20 feet below the base of the MFGU to at least 20 feet above the top of the MFGU; and from at least 25 feet bgs to 5 feet bgs.

A tremie pipe will be used to place Type V cement in the open core hole from the bottom of the core hole to the top of the core hole. Cement retainers, as described above, will be used to force cement grout into the annulus and behind perforated intervals, as necessary.

If the hole has been obstructed, as much cement as possible will be placed from 100 feet below the LBFU-bedrock contact to the top of the core hole.

The volume of Type V cement will be recorded and will not be less than the estimated volume of material required to fill each interval. All cement grout will consist of Type V cement, or equivalent approved in accordance with the UIC Permit.

Certification

I certify under the penalty of law that I have personally examined and am familiar with the information submitted in this document and all attachments and that, based on my inquiry of those individuals immediately responsible for obtaining the information, I believe that the information is true, accurate, and complete. I am aware that there are significant penalties for submitting false information, including the possibliity of fine and imprisonment. (Ref. 40 CFR § 144.32)

Name and Official Title *(Please type or print)*	Signature	Date Signed
Dan Johnson, VP - General Manager		10/3/2019

INSTRUCTIONS FOR FORM 7520-19

This form replaces forms 7520-12 and 7520-14. Use this form only when work is planned or has occurred that affects the well's construction or operation as an injection well, including work on the casing, tubing or packer (or for shallow Class V wells, the subsurface fluid emplacement network). Use one form per injection well. While reports or other information developed by contractors or service companies may be attached, this form must be signed by a responsible entity as described at 40 CFR 144.32. Note: operators closing Class V wells should use Form 7520-17.

NAME, ADDRESS, PHONE AND/OR EMAIL OF PERMITTEE: Enter the name and street address, city/town, state, and ZIP code of the permittee. Also provide an email address (if available) and/or a phone number.

PERMIT OR EPA ID NUMBER: Enter the well identification number or permit number assigned to the well by the EPA or the permitting authority.

API NUMBER: Enter the number assigned by the local jurisdiction (usually a State Oil and Gas Agency) using the American Petroleum Institute standard numbering system.

FULL WELL NAME: Enter the full name of the well or project.

Enter the **STATE** and **COUNTY** where the well is located. For States that do not have counties, use the name of that State's equivalent jurisdiction at a more local level.

WELL LOCATION: Fill in the complete township, range, and section to the nearest quarter-quarter section. A township is north or south of the baseline, and a range is east or west of the principal meridian (e.g., T12N, R34W). Also include the distance, in feet, from the nearest north or south line and nearest east or west line of the quarter-section. Also, enter the **latitude** and **longitude** of the well in decimal degrees, to five or six places if possible; be sure to include a negative sign for the longitude of a well in the Western Hemisphere and a negative sign for the latitude of a well in the Southern Hemisphere.

Enter the **WELL CLASS,** i.e., the class of injection well as defined in 40 CFR 144.6.

TIMING OF THE ACTION: Check ***Notice prior to work*** if the activity has not yet occurred (i.e., is planned). Check ***Report after work*** if the activity described has already occurred. As appropriate, include the date the activity is expected to start or the date the activity was completed. (Note this may not be available, e.g., for a plugging plan submitted with a permit application.)

TYPE OF ACTION: Check the appropriate box to describe the kind of activity being reported. Check ***Well Rework*** for work that was/will be performed on the well after it has already been in operation as an injection well. Check ***Plugging and Abandonment*** to report on plans for or descriptions of final closure/plugging after use as an injection well. Check ***Conversion to a Non-Injection Well*** if the well is to be converted to something other than an injection well.

Provide a **NARRATIVE DESCRIPTION** of the work planned to be performed, or that was performed. The narrative should include a description of the main procedures planned or that occurred during the work activity. A service company report, daily report, or similar document may be attached if it includes all the requested information and is clear and legible.

For well reworks, include the following information: The reason for the well rework; depths of activity; type of activity; changes to injection well configuration, well casing, or cement behind casing; any plug added to the well and its depth; any newly drilled interval and its depth; method(s) to demonstrate that the well has mechanical integrity (as applicable); and any deviations from the approved rework plan (as applicable).

For a well plugging plan, include the following information: Reason for the well plugging; number of plugs placed, and their depths; materials used as plugs (e.g., cast iron bridge plug, cement, cement retainer); method to set plugs; and wait-on-cement times, if any. Also provide one or more cost estimates from an independent firm in the business of plugging and abandoning wells to plug the well as described in the plan.

For well plugging affidavit, include the following information: Reason for the well plugging; number of plugs placed, and their depths; materials used as plugs (e.g., cast iron bridge plug, cement, cement retainer); method to set plugs; wait-on-cement times, if any; and any deviations from the approved plugging plan (if applicable).

For conversion to a non-injection well, include the following information: Depths of activity; type of activity; changes to injection well configuration, well casing, or cement behind casing; any plug added to the well and its depth; any newly drilled interval and its depth; depths of new perforations; and method(s) to demonstrate that the well has mechanical integrity (as applicable).

For all of the above activities, include a well sketch depicting the work, results of well tests/logging performed, service company tickets, and any other available information demonstrating how the work was/is to be performed. Also, specify whether depths are below ground surface, relative to Kelly bushing, etc.

CERTIFICATION: This form must be signed and dated by either: a responsible corporate officer for a corporation, by a general partner for a partnership, by the proprietor of a sole proprietorship, or by a principal executive or ranking elected official for a public agency.

PAPERWORK REDUCTION ACT NOTICE: The public reporting and recordkeeping burden for this collection of information is estimated to average between 6.0 and 7.9 hours per response, depending on the injection well class. Burden means the total time, effort, or financial resource expended by persons to generate, maintain, retain, or disclose or provide information to or for a Federal Agency. This includes the time needed to review instructions; develop, acquire, install, and utilize technology and systems for the purposes of collecting, validating, and verifying information, processing and maintaining information, and disclosing and providing information; adjust the existing ways to comply with any previously applicable instructions and requirements; train personnel to be able to respond to the collection of information; search data sources; complete and review the collection of information; and, transmit or otherwise disclose the information. An agency may not conduct or sponsor, and a person is not required to respond to, a collection of information unless it displays a currently valid OMB control number. Send comments on the Agency's need for this information, the accuracy of the provided burden estimates, and any suggested methods for minimizing respondent burden, including the use of automated collection techniques to Director, Collection Strategies Division, U.S. Environmental Protection Agency (2822), 1200 Pennsylvania Ave., NW., Washington, D.C. 20460. Include the OMB control number in any correspondence. Do not send the completed forms to this address.

AS-BUILT COREHOLE 396MF

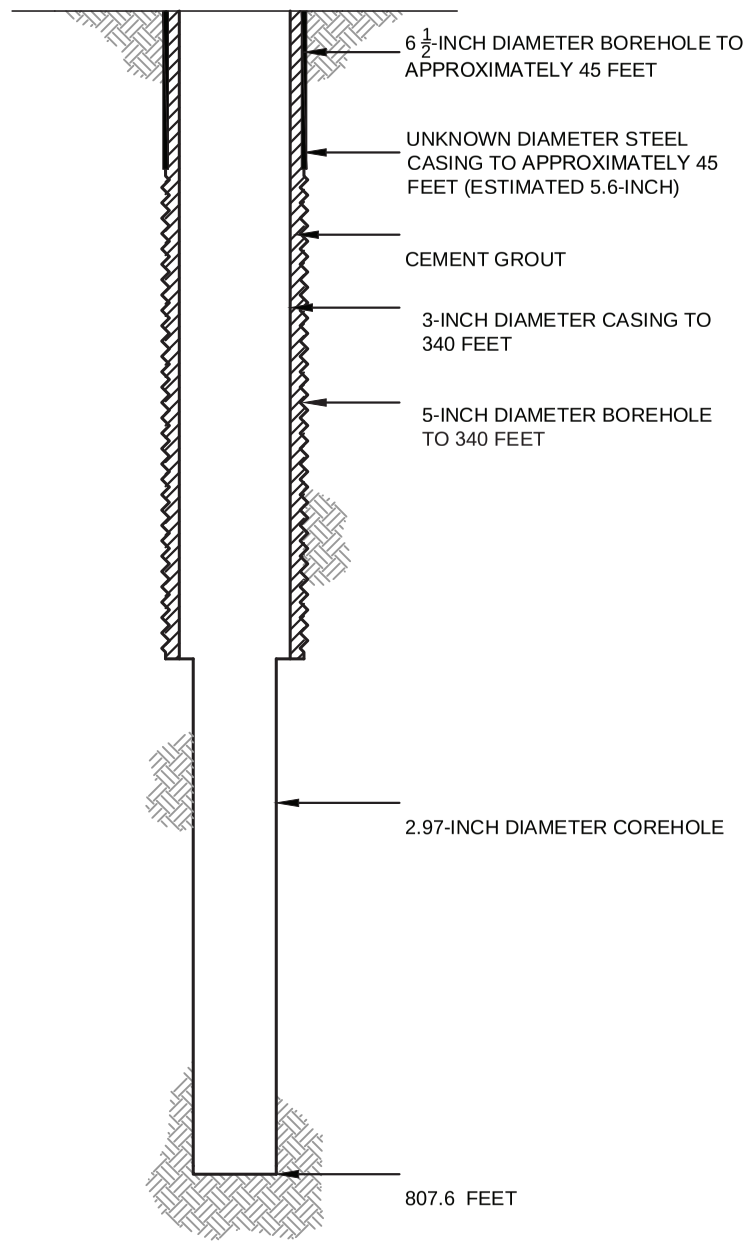

PROPOSED PLUGGING AND ABANDONMENT COREHOLE 396MF

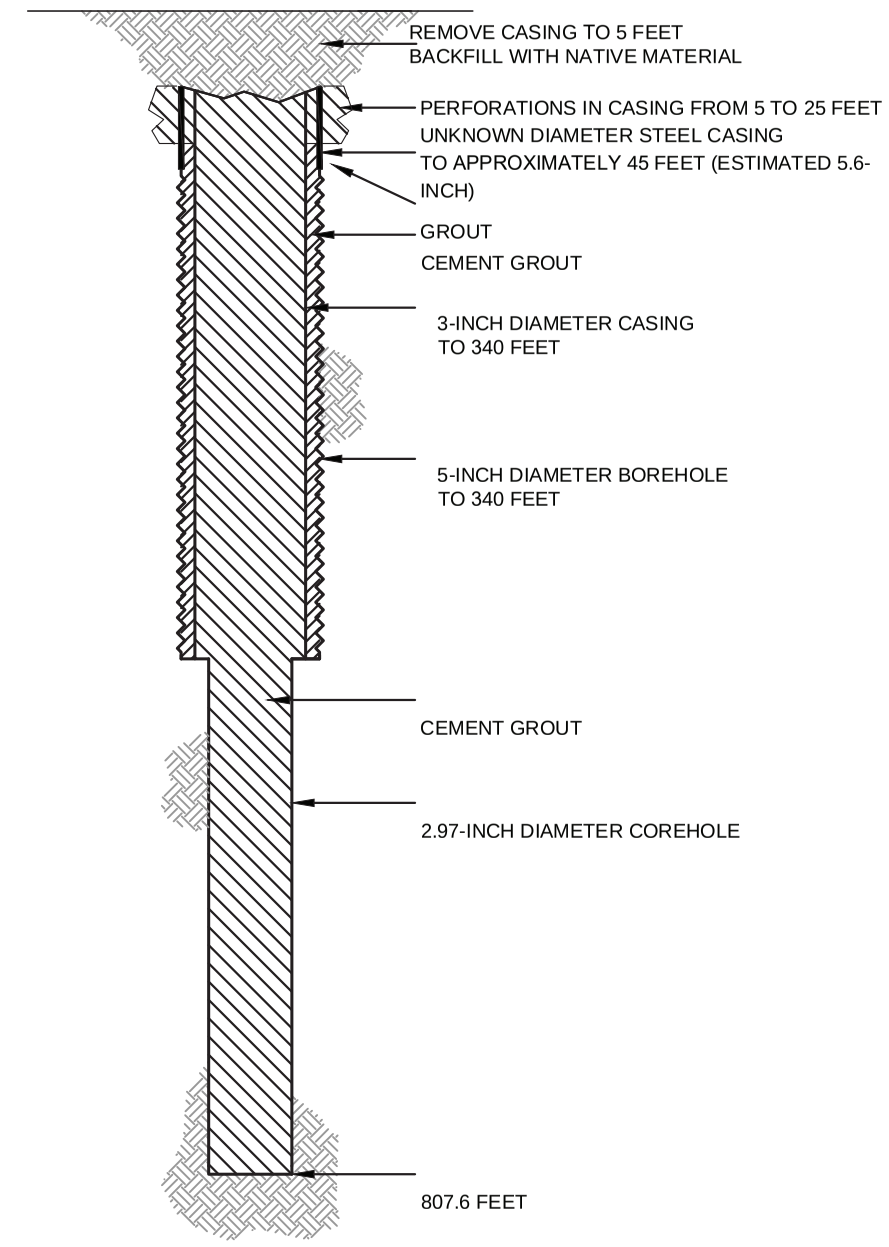

HALEY ALDRICH

FLORENCE COPPER, INC.
FLORENCE, ARIZONA

COREHOLE 396MF DIAGRAM

FLORENCE COPPER INC.

NOT TO SCALE
SEPTEMBER 2019

FIGURE 1

MOBINI, GITA Printed: 4/21/2017 12:00 PM Layout: ABANDON (2)
G:\PROJECTS\CURIS RESOURCES\38706-CURIS FEASIBILITY\DRAWINGS\EPA\WELL ABANDON\415S_ABANDON.DWG

OMB No. 2040-0042 Approval Expires 4/30/2022

United States Environmental Protection Agency

WELL REWORK RECORD, PLUGGING AND ABANDONMENT PLAN, OR PLUGGING AND ABANDONMENT AFFIDAVIT

Name and Address, Phone Number and/or Email of Permittee

Florence Copper Project
1575 W Hunt Hwy,
Florence, AZ 85132

Permit or EPA ID Number	API Number	Full Well Name
R9UIC-AZ3-FY11-1		398MF

State	County
Arizona	Pinal

Locate well in two directions from nearest lines of quarter section and drilling unit

Latitude 33.04855748

Longitude -111.4289395

Surface Location

SW **1/4 of** SE **1/4 of Section** 28 **Township** 4S **Range** 9E

_____ **ft. from (N/S)** _____ **Line of quarter section**

_____ **ft. from (E/W)** _____ **Line of quarter section.**

Well Class	Timing of Action (pick one)	Type of Action (pick one)
☐ Class I ☐ Class II ☑ Class III ☐ Class V	☑ Notice Prior to Work Date Expected to Commence March 2021 ☐ Report After Work Date Work Ended	☐ Well Rework ☑ Plugging and Abandonment ☐ Conversion to a Non-Injection Well

Provide a narrative description of the work planned to be performed, or that was performed. Use additional pages as necessary. See instructions.

A workover rig capable of performing the required abandonment operations at the required depths will be moved in and set up over the core hole. The core hole will be inspected to determine the depth to which the hole remains open and if any obstructions are present in the core hole; the presence and condition of any existing collar will also be documented. If necessary, the core hole will be cleaned out to a depth of at least 100 feet below the bedrock-LBFU contact to enable placement of cement seals.

If collar is present, an attempt will be made to remove it. If removal of the collar is not feasible, it will be left in the hole and perforated as needed to allow an annular seal to be placed to a depth of at least 25 feet bgs. In areas of agricultural use, the surface casing will be cut at least 5 feet bgs and removed.

If the collar cannot be removed, it will be perforated from at least 20 feet below the bedrock-LBFU contact to at least 20 feet above the contact; from at least 20 feet below the base of the MFGU to at least 20 feet above the top of the MFGU; and from at least 25 feet bgs to 5 feet bgs.

A tremie pipe will be used to place Type V cement in the open core hole from the bottom of the core hole to the top of the core hole. Cement retainers, as described above, will be used to force cement grout into the annulus and behind perforated intervals, as necessary.

If the hole has been obstructed, as much cement as possible will be placed from 100 feet below the LBFU-bedrock contact to the top of the core hole.

The volume of Type V cement will be recorded and will not be less than the estimated volume of material required to fill each interval. All cement grout will consist of Type V cement, or equivalent approved in accordance with the UIC Permit.

Certification

I certify under the penalty of law that I have personally examined and am familiar with the information submitted in this document and all attachments and that, based on my inquiry of those individuals immediately responsible for obtaining the information, I believe that the information is true, accurate, and complete. I am aware that there are significant penalties for submitting false information, including the possibliity of fine and imprisonment. (Ref. 40 CFR § 144.32)

Name and Official Title *(Please type or print)*	Signature	Date Signed
Dan Johnson, VP - General Manager		10/3/2019

INSTRUCTIONS FOR FORM 7520-19

This form replaces forms 7520-12 and 7520-14. Use this form only when work is planned or has occurred that affects the well's construction or operation as an injection well, including work on the casing, tubing or packer (or for shallow Class V wells, the subsurface fluid emplacement network). Use one form per injection well. While reports or other information developed by contractors or service companies may be attached, this form must be signed by a responsible entity as described at 40 CFR 144.32. Note: operators closing Class V wells should use Form 7520-17.

NAME, ADDRESS, PHONE AND/OR EMAIL OF PERMITTEE: Enter the name and street address, city/town, state, and ZIP code of the permittee. Also provide an email address (if available) and/or a phone number.

PERMIT OR EPA ID NUMBER: Enter the well identification number or permit number assigned to the well by the EPA or the permitting authority.

API NUMBER: Enter the number assigned by the local jurisdiction (usually a State Oil and Gas Agency) using the American Petroleum Institute standard numbering system.

FULL WELL NAME: Enter the full name of the well or project.

Enter the **STATE** and **COUNTY** where the well is located. For States that do not have counties, use the name of that State's equivalent jurisdiction at a more local level.

WELL LOCATION: Fill in the complete township, range, and section to the nearest quarter-quarter section. A township is north or south of the baseline, and a range is east or west of the principal meridian (e.g., T12N, R34W). Also include the distance, in feet, from the nearest north or south line and nearest east or west line of the quarter-section. Also, enter the **latitude** and **longitude** of the well in decimal degrees, to five or six places if possible; be sure to include a negative sign for the longitude of a well in the Western Hemisphere and a negative sign for the latitude of a well in the Southern Hemisphere.

Enter the **WELL CLASS,** i.e., the class of injection well as defined in 40 CFR 144.6.

TIMING OF THE ACTION: Check ***Notice prior to work*** if the activity has not yet occurred (i.e., is planned). Check ***Report after work*** if the activity described has already occurred. As appropriate, include the date the activity is expected to start or the date the activity was completed. (Note this may not be available, e.g., for a plugging plan submitted with a permit application.)

TYPE OF ACTION: Check the appropriate box to describe the kind of activity being reported. Check ***Well Rework*** for work that was/will be performed on the well after it has already been in operation as an injection well. Check ***Plugging and Abandonment*** to report on plans for or descriptions of final closure/plugging after use as an injection well. Check ***Conversion to a Non-Injection Well*** if the well is to be converted to something other than an injection well.

Provide a **NARRATIVE DESCRIPTION** of the work planned to be performed, or that was performed. The narrative should include a description of the main procedures planned or that occurred during the work activity. A service company report, daily report, or similar document may be attached if it includes all the requested information and is clear and legible.

For well reworks, include the following information: The reason for the well rework; depths of activity; type of activity; changes to injection well configuration, well casing, or cement behind casing; any plug added to the well and its depth; any newly drilled interval and its depth; method(s) to demonstrate that the well has mechanical integrity (as applicable); and any deviations from the approved rework plan (as applicable).

For a well plugging plan, include the following information: Reason for the well plugging; number of plugs placed, and their depths; materials used as plugs (e.g., cast iron bridge plug, cement, cement retainer); method to set plugs; and wait-on-cement times, if any. Also provide one or more cost estimates from an independent firm in the business of plugging and abandoning wells to plug the well as described in the plan.

For well plugging affidavit, include the following information: Reason for the well plugging; number of plugs placed, and their depths; materials used as plugs (e.g., cast iron bridge plug, cement, cement retainer); method to set plugs; wait-on-cement times, if any; and any deviations from the approved plugging plan (if applicable).

For conversion to a non-injection well, include the following information: Depths of activity; type of activity; changes to injection well configuration, well casing, or cement behind casing; any plug added to the well and its depth; any newly drilled interval and its depth; depths of new perforations; and method(s) to demonstrate that the well has mechanical integrity (as applicable).

For all of the above activities, include a well sketch depicting the work, results of well tests/logging performed, service company tickets, and any other available information demonstrating how the work was/is to be performed. Also, specify whether depths are below ground surface, relative to Kelly bushing, etc.

CERTIFICATION: This form must be signed and dated by either: a responsible corporate officer for a corporation, by a general partner for a partnership, by the proprietor of a sole proprietorship, or by a principal executive or ranking elected official for a public agency.

PAPERWORK REDUCTION ACT NOTICE: The public reporting and recordkeeping burden for this collection of information is estimated to average between 6.0 and 7.9 hours per response, depending on the injection well class. Burden means the total time, effort, or financial resource expended by persons to generate, maintain, retain, or disclose or provide information to or for a Federal Agency. This includes the time needed to review instructions; develop, acquire, install, and utilize technology and systems for the purposes of collecting, validating, and verifying information, processing and maintaining information, and disclosing and providing information; adjust the existing ways to comply with any previously applicable instructions and requirements; train personnel to be able to respond to the collection of information; search data sources; complete and review the collection of information; and, transmit or otherwise disclose the information. An agency may not conduct or sponsor, and a person is not required to respond to, a collection of information unless it displays a currently valid OMB control number. Send comments on the Agency's need for this information, the accuracy of the provided burden estimates, and any suggested methods for minimizing respondent burden, including the use of automated collection techniques to Director, Collection Strategies Division, U.S. Environmental Protection Agency (2822), 1200 Pennsylvania Ave., NW., Washington, D.C. 20460. Include the OMB control number in any correspondence. Do not send the completed forms to this address.

AS-BUILT COREHOLE 398MF

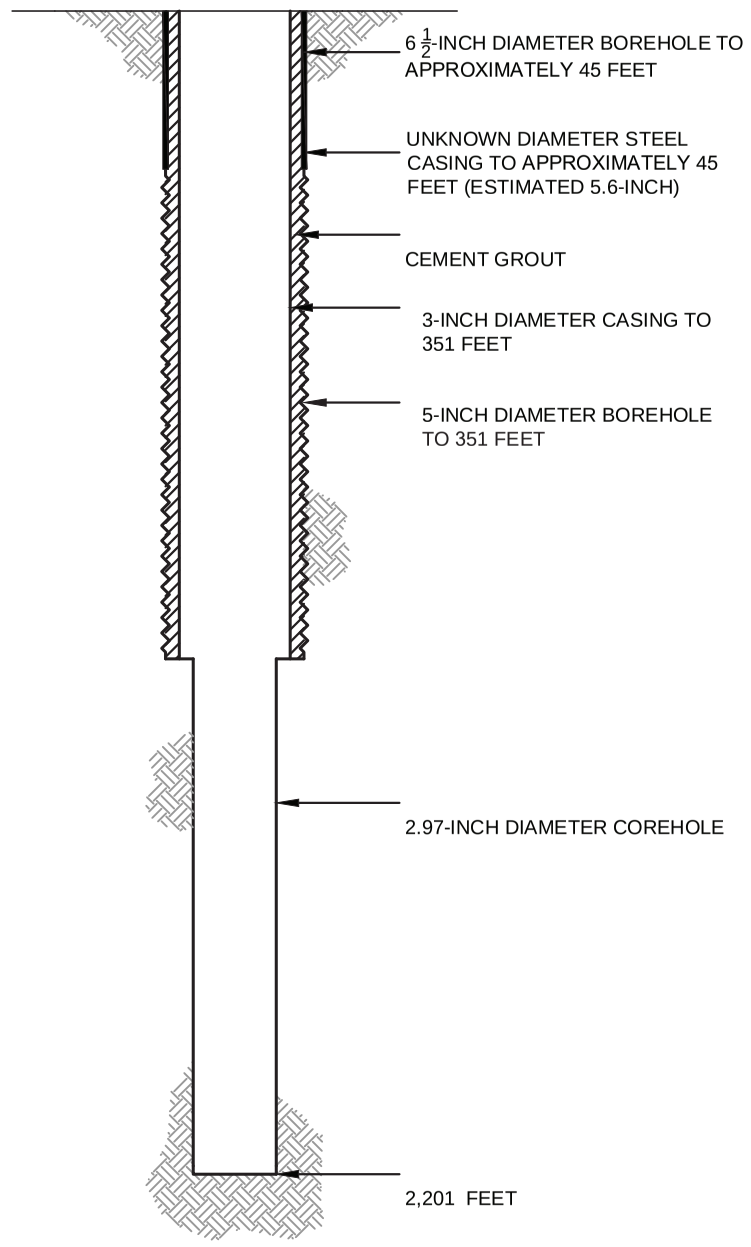

PROPOSED PLUGGING AND ABANDONMENT COREHOLE 398MF

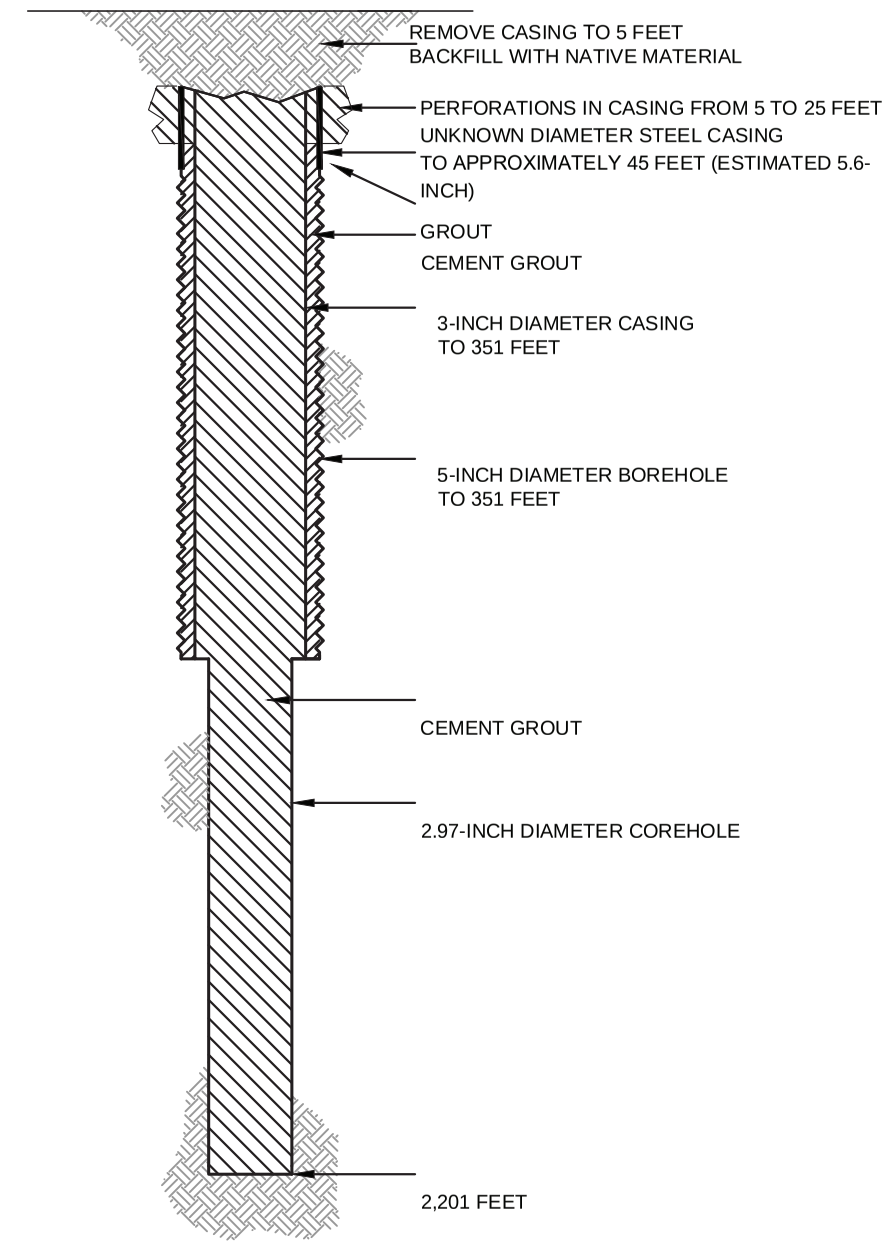

HALEY ALDRICH

FLORENCE COPPER, INC.
FLORENCE, ARIZONA

COREHOLE 398MF DIAGRAM

FLORENCE COPPER INC.

NOT TO SCALE
SEPTEMBER 2019

FIGURE 1

MOBINI, GITA Printed: 4/21/2017 12:00 PM Layout: ABANDON (2)
G:\PROJECTS\CURIS RESOURCES\38706-CURIS FEASIBILITY\DRAWINGS\EPA\WELL ABANDON\415S_ABANDON.DWG

OMB No. 2040-0042 Approval Expires 4/30/2022

United States Environmental Protection Agency

WELL REWORK RECORD, PLUGGING AND ABANDONMENT PLAN, OR PLUGGING AND ABANDONMENT AFFIDAVIT

Name and Address, Phone Number and/or Email of Permittee

Florence Copper Project
1575 W Hunt Hwy,
Florence, AZ 85132

Permit or EPA ID Number	API Number	Full Well Name
R9UIC-AZ3-FY11-1		400MF

State	County
Arizona	Pinal

Locate well in two directions from nearest lines of quarter section and drilling unit

Latitude 33.04901671

Longitude -111.4293449

Surface Location

SW **1/4 of** SE **1/4 of Section** 28 **Township** 4S **Range** 9E

_____ **ft. from (N/S)** _____ **Line of quarter section**

_____ **ft. from (E/W)** _____ **Line of quarter section.**

Well Class	Timing of Action (pick one)	Type of Action (pick one)
☐ Class I ☐ Class II ☑ Class III ☐ Class V	☑ Notice Prior to Work Date Expected to Commence March 2021 ☐ Report After Work Date Work Ended	☐ Well Rework ☑ Plugging and Abandonment ☐ Conversion to a Non-Injection Well

Provide a narrative description of the work planned to be performed, or that was performed. Use additional pages as necessary. See instructions.

A workover rig capable of performing the required abandonment operations at the required depths will be moved in and set up over the core hole. The core hole will be inspected to determine the depth to which the hole remains open and if any obstructions are present in the core hole; the presence and condition of any existing collar will also be documented. If necessary, the core hole will be cleaned out to a depth of at least 100 feet below the bedrock-LBFU contact to enable placement of cement seals.

If collar is present, an attempt will be made to remove it. If removal of the collar is not feasible, it will be left in the hole and perforated as needed to allow an annular seal to be placed to a depth of at least 25 feet bgs. In areas of agricultural use, the surface casing will be cut at least 5 feet bgs and removed.

If the collar cannot be removed, it will be perforated from at least 20 feet below the bedrock-LBFU contact to at least 20 feet above the contact; from at least 20 feet below the base of the MFGU to at least 20 feet above the top of the MFGU; and from at least 25 feet bgs to 5 feet bgs.

A tremie pipe will be used to place Type V cement in the open core hole from the bottom of the core hole to the top of the core hole. Cement retainers, as described above, will be used to force cement grout into the annulus and behind perforated intervals, as necessary.

If the hole has been obstructed, as much cement as possible will be placed from 100 feet below the LBFU-bedrock contact to the top of the core hole.

The volume of Type V cement will be recorded and will not be less than the estimated volume of material required to fill each interval. All cement grout will consist of Type V cement, or equivalent approved in accordance with the UIC Permit.

Certification

I certify under the penalty of law that I have personally examined and am familiar with the information submitted in this document and all attachments and that, based on my inquiry of those individuals immediately responsible for obtaining the information, I believe that the information is true, accurate, and complete. I am aware that there are significant penalties for submitting false information, including the possibliity of fine and imprisonment. (Ref. 40 CFR § 144.32)

Name and Official Title *(Please type or print)*	Signature	Date Signed
Dan Johnson, VP - General Manager		10/3/2019

INSTRUCTIONS FOR FORM 7520-19

This form replaces forms 7520-12 and 7520-14. Use this form only when work is planned or has occurred that affects the well's construction or operation as an injection well, including work on the casing, tubing or packer (or for shallow Class V wells, the subsurface fluid emplacement network). Use one form per injection well. While reports or other information developed by contractors or service companies may be attached, this form must be signed by a responsible entity as described at 40 CFR 144.32. Note: operators closing Class V wells should use Form 7520-17.

NAME, ADDRESS, PHONE AND/OR EMAIL OF PERMITTEE: Enter the name and street address, city/town, state, and ZIP code of the permittee. Also provide an email address (if available) and/or a phone number.

PERMIT OR EPA ID NUMBER: Enter the well identification number or permit number assigned to the well by the EPA or the permitting authority.

API NUMBER: Enter the number assigned by the local jurisdiction (usually a State Oil and Gas Agency) using the American Petroleum Institute standard numbering system.

FULL WELL NAME: Enter the full name of the well or project.

Enter the **STATE** and **COUNTY** where the well is located. For States that do not have counties, use the name of that State's equivalent jurisdiction at a more local level.

WELL LOCATION: Fill in the complete township, range, and section to the nearest quarter-quarter section. A township is north or south of the baseline, and a range is east or west of the principal meridian (e.g., T12N, R34W). Also include the distance, in feet, from the nearest north or south line and nearest east or west line of the quarter-section. Also, enter the **latitude** and **longitude** of the well in decimal degrees, to five or six places if possible; be sure to include a negative sign for the longitude of a well in the Western Hemisphere and a negative sign for the latitude of a well in the Southern Hemisphere.

Enter the **WELL CLASS,** i.e., the class of injection well as defined in 40 CFR 144.6.

TIMING OF THE ACTION: Check ***Notice prior to work*** if the activity has not yet occurred (i.e., is planned). Check ***Report after work*** if the activity described has already occurred. As appropriate, include the date the activity is expected to start or the date the activity was completed. (Note this may not be available, e.g., for a plugging plan submitted with a permit application.)

TYPE OF ACTION: Check the appropriate box to describe the kind of activity being reported. Check ***Well Rework*** for work that was/will be performed on the well after it has already been in operation as an injection well. Check ***Plugging and Abandonment*** to report on plans for or descriptions of final closure/plugging after use as an injection well. Check ***Conversion to a Non-Injection Well*** if the well is to be converted to something other than an injection well.

Provide a **NARRATIVE DESCRIPTION** of the work planned to be performed, or that was performed. The narrative should include a description of the main procedures planned or that occurred during the work activity. A service company report, daily report, or similar document may be attached if it includes all the requested information and is clear and legible.

For well reworks, include the following information: The reason for the well rework; depths of activity; type of activity; changes to injection well configuration, well casing, or cement behind casing; any plug added to the well and its depth; any newly drilled interval and its depth; method(s) to demonstrate that the well has mechanical integrity (as applicable); and any deviations from the approved rework plan (as applicable).

For a well plugging plan, include the following information: Reason for the well plugging; number of plugs placed, and their depths; materials used as plugs (e.g., cast iron bridge plug, cement, cement retainer); method to set plugs; and wait-on-cement times, if any. Also provide one or more cost estimates from an independent firm in the business of plugging and abandoning wells to plug the well as described in the plan.

For well plugging affidavit, include the following information: Reason for the well plugging; number of plugs placed, and their depths; materials used as plugs (e.g., cast iron bridge plug, cement, cement retainer); method to set plugs; wait-on-cement times, if any; and any deviations from the approved plugging plan (if applicable).

For conversion to a non-injection well, include the following information: Depths of activity; type of activity; changes to injection well configuration, well casing, or cement behind casing; any plug added to the well and its depth; any newly drilled interval and its depth; depths of new perforations; and method(s) to demonstrate that the well has mechanical integrity (as applicable).

For all of the above activities, include a well sketch depicting the work, results of well tests/logging performed, service company tickets, and any other available information demonstrating how the work was/is to be performed. Also, specify whether depths are below ground surface, relative to Kelly bushing, etc.

CERTIFICATION: This form must be signed and dated by either: a responsible corporate officer for a corporation, by a general partner for a partnership, by the proprietor of a sole proprietorship, or by a principal executive or ranking elected official for a public agency.

PAPERWORK REDUCTION ACT NOTICE: The public reporting and recordkeeping burden for this collection of information is estimated to average between 6.0 and 7.9 hours per response, depending on the injection well class. Burden means the total time, effort, or financial resource expended by persons to generate, maintain, retain, or disclose or provide information to or for a Federal Agency. This includes the time needed to review instructions; develop, acquire, install, and utilize technology and systems for the purposes of collecting, validating, and verifying information, processing and maintaining information, and disclosing and providing information; adjust the existing ways to comply with any previously applicable instructions and requirements; train personnel to be able to respond to the collection of information; search data sources; complete and review the collection of information; and, transmit or otherwise disclose the information. An agency may not conduct or sponsor, and a person is not required to respond to, a collection of information unless it displays a currently valid OMB control number. Send comments on the Agency's need for this information, the accuracy of the provided burden estimates, and any suggested methods for minimizing respondent burden, including the use of automated collection techniques to Director, Collection Strategies Division, U.S. Environmental Protection Agency (2822), 1200 Pennsylvania Ave., NW., Washington, D.C. 20460. Include the OMB control number in any correspondence. Do not send the completed forms to this address.

AS-BUILT COREHOLE 400MF

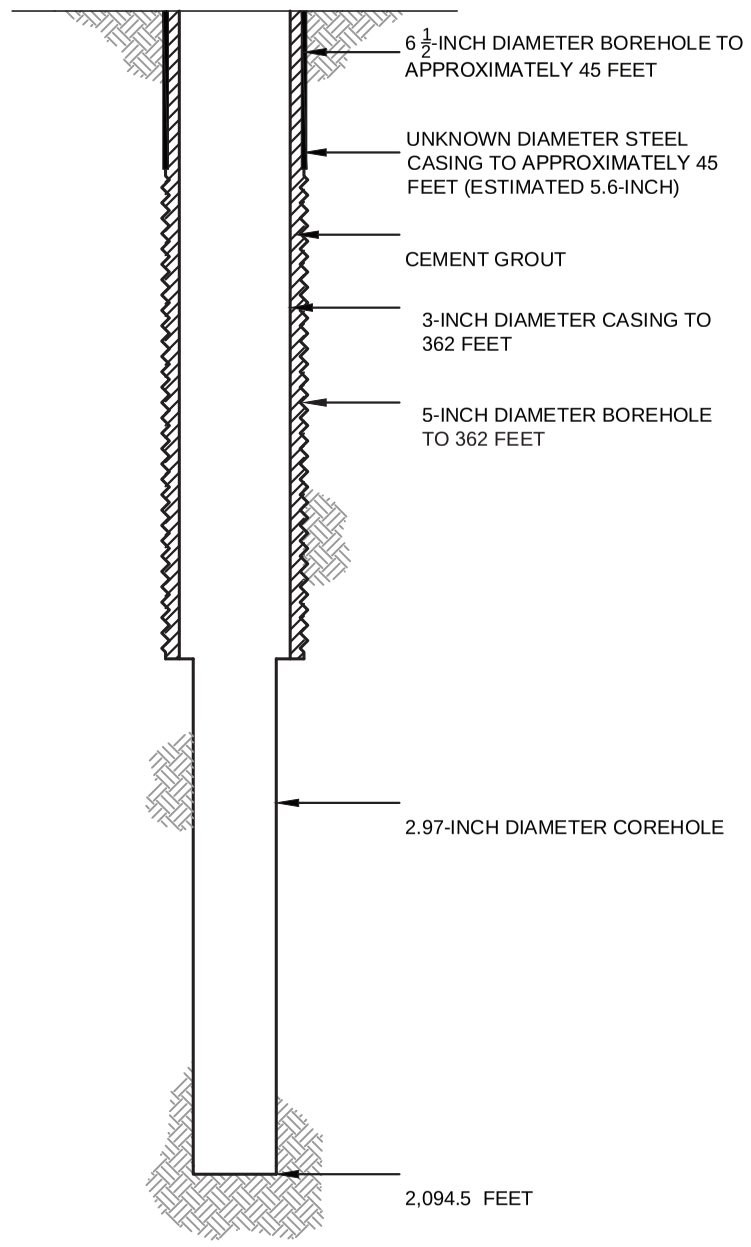

PROPOSED PLUGGING AND ABANDONMENT COREHOLE 400MF

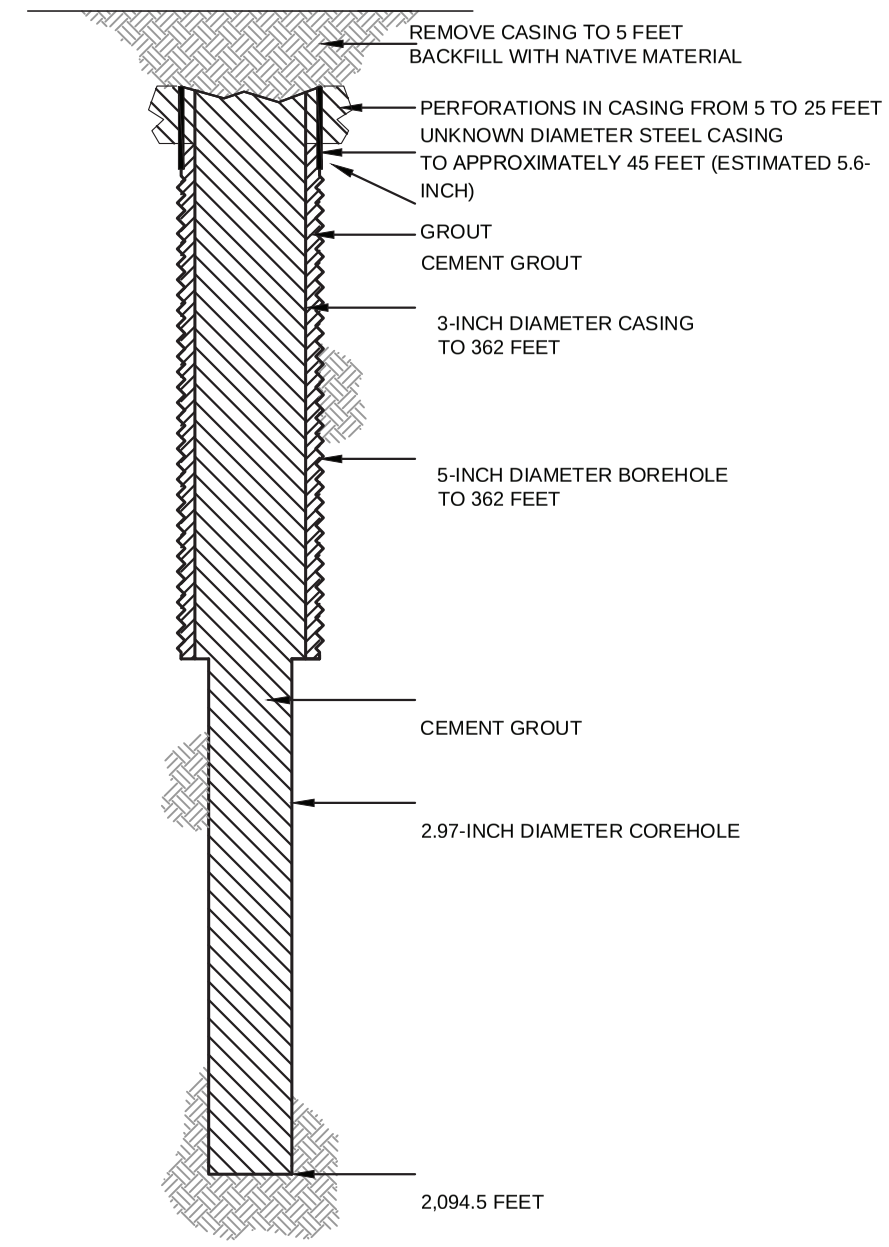

HALEY ALDRICH

FLORENCE COPPER, INC.
FLORENCE, ARIZONA

COREHOLE 400MF DIAGRAM

FLORENCE COPPER INC.

NOT TO SCALE
SEPTEMBER 2019

FIGURE 1

MOBINI, GITA Printed: 4/21/2017 12:00 PM Layout: ABANDON (2)
G:\PROJECTS\CURIS RESOURCES\38706-CURIS FEASIBILITY\DRAWINGS\EPA\WELL ABANDON\415S_ABANDON.DWG

OMB No. 2040-0042 Approval Expires 4/30/2022

United States Environmental Protection Agency

WELL REWORK RECORD, PLUGGING AND ABANDONMENT PLAN, OR PLUGGING AND ABANDONMENT AFFIDAVIT

Name and Address, Phone Number and/or Email of Permittee

Florence Copper Project
1575 W Hunt Hwy,
Florence, AZ 85132

Permit or EPA ID Number	API Number	Full Well Name
R9UIC-AZ3-FY11-1		401MF

State	County
Arizona	Pinal

Locate well in two directions from nearest lines of quarter section and drilling unit

Latitude 33.04900712

Longitude -111.4268973

Surface Location

SW **1/4 of** SE **1/4 of Section** 28 **Township** 4S **Range** 9E

_____ **ft. from (N/S)** _____ **Line of quarter section**

_____ **ft. from (E/W)** _____ **Line of quarter section.**

Well Class	Timing of Action (pick one)	Type of Action (pick one)
☐ Class I ☐ Class II ☑ Class III ☐ Class V	☑ Notice Prior to Work Date Expected to Commence March 2021 ☐ Report After Work Date Work Ended	☐ Well Rework ☑ Plugging and Abandonment ☐ Conversion to a Non-Injection Well

Provide a narrative description of the work planned to be performed, or that was performed. Use additional pages as necessary. See instructions.

A workover rig capable of performing the required abandonment operations at the required depths will be moved in and set up over the core hole. The core hole will be inspected to determine the depth to which the hole remains open and if any obstructions are present in the core hole; the presence and condition of any existing collar will also be documented. If necessary, the core hole will be cleaned out to a depth of at least 100 feet below the bedrock-LBFU contact to enable placement of cement seals.

If collar is present, an attempt will be made to remove it. If removal of the collar is not feasible, it will be left in the hole and perforated as needed to allow an annular seal to be placed to a depth of at least 25 feet bgs. In areas of agricultural use, the surface casing will be cut at least 5 feet bgs and removed.

If the collar cannot be removed, it will be perforated from at least 20 feet below the bedrock-LBFU contact to at least 20 feet above the contact; from at least 20 feet below the base of the MFGU to at least 20 feet above the top of the MFGU; and from at least 25 feet bgs to 5 feet bgs.

A tremie pipe will be used to place Type V cement in the open core hole from the bottom of the core hole to the top of the core hole. Cement retainers, as described above, will be used to force cement grout into the annulus and behind perforated intervals, as necessary.

If the hole has been obstructed, as much cement as possible will be placed from 100 feet below the LBFU-bedrock contact to the top of the core hole.

The volume of Type V cement will be recorded and will not be less than the estimated volume of material required to fill each interval. All cement grout will consist of Type V cement, or equivalent approved in accordance with the UIC Permit.

Certification

I certify under the penalty of law that I have personally examined and am familiar with the information submitted in this document and all attachments and that, based on my inquiry of those individuals immediately responsible for obtaining the information, I believe that the information is true, accurate, and complete. I am aware that there are significant penalties for submitting false information, including the possibliity of fine and imprisonment. (Ref. 40 CFR § 144.32)

Name and Official Title *(Please type or print)*	Signature	Date Signed
Dan Johnson, VP - General Manager		10/3/2019

INSTRUCTIONS FOR FORM 7520-19

This form replaces forms 7520-12 and 7520-14. Use this form only when work is planned or has occurred that affects the well's construction or operation as an injection well, including work on the casing, tubing or packer (or for shallow Class V wells, the subsurface fluid emplacement network). Use one form per injection well. While reports or other information developed by contractors or service companies may be attached, this form must be signed by a responsible entity as described at 40 CFR 144.32. Note: operators closing Class V wells should use Form 7520-17.

NAME, ADDRESS, PHONE AND/OR EMAIL OF PERMITTEE: Enter the name and street address, city/town, state, and ZIP code of the permittee. Also provide an email address (if available) and/or a phone number.

PERMIT OR EPA ID NUMBER: Enter the well identification number or permit number assigned to the well by the EPA or the permitting authority.

API NUMBER: Enter the number assigned by the local jurisdiction (usually a State Oil and Gas Agency) using the American Petroleum Institute standard numbering system.

FULL WELL NAME: Enter the full name of the well or project.

Enter the **STATE** and **COUNTY** where the well is located. For States that do not have counties, use the name of that State's equivalent jurisdiction at a more local level.

WELL LOCATION: Fill in the complete township, range, and section to the nearest quarter-quarter section. A township is north or south of the baseline, and a range is east or west of the principal meridian (e.g., T12N, R34W). Also include the distance, in feet, from the nearest north or south line and nearest east or west line of the quarter-section. Also, enter the **latitude** and **longitude** of the well in decimal degrees, to five or six places if possible; be sure to include a negative sign for the longitude of a well in the Western Hemisphere and a negative sign for the latitude of a well in the Southern Hemisphere.

Enter the **WELL CLASS,** i.e., the class of injection well as defined in 40 CFR 144.6.

TIMING OF THE ACTION: Check ***Notice prior to work*** if the activity has not yet occurred (i.e., is planned). Check ***Report after work*** if the activity described has already occurred. As appropriate, include the date the activity is expected to start or the date the activity was completed. (Note this may not be available, e.g., for a plugging plan submitted with a permit application.)

TYPE OF ACTION: Check the appropriate box to describe the kind of activity being reported. Check ***Well Rework*** for work that was/will be performed on the well after it has already been in operation as an injection well. Check ***Plugging and Abandonment*** to report on plans for or descriptions of final closure/plugging after use as an injection well. Check ***Conversion to a Non-Injection Well*** if the well is to be converted to something other than an injection well.

Provide a **NARRATIVE DESCRIPTION** of the work planned to be performed, or that was performed. The narrative should include a description of the main procedures planned or that occurred during the work activity. A service company report, daily report, or similar document may be attached if it includes all the requested information and is clear and legible.

For well reworks, include the following information: The reason for the well rework; depths of activity; type of activity; changes to injection well configuration, well casing, or cement behind casing; any plug added to the well and its depth; any newly drilled interval and its depth; method(s) to demonstrate that the well has mechanical integrity (as applicable); and any deviations from the approved rework plan (as applicable).

For a well plugging plan, include the following information: Reason for the well plugging; number of plugs placed, and their depths; materials used as plugs (e.g., cast iron bridge plug, cement, cement retainer); method to set plugs; and wait-on-cement times, if any. Also provide one or more cost estimates from an independent firm in the business of plugging and abandoning wells to plug the well as described in the plan.

For well plugging affidavit, include the following information: Reason for the well plugging; number of plugs placed, and their depths; materials used as plugs (e.g., cast iron bridge plug, cement, cement retainer); method to set plugs; wait-on-cement times, if any; and any deviations from the approved plugging plan (if applicable).

For conversion to a non-injection well, include the following information: Depths of activity; type of activity; changes to injection well configuration, well casing, or cement behind casing; any plug added to the well and its depth; any newly drilled interval and its depth; depths of new perforations; and method(s) to demonstrate that the well has mechanical integrity (as applicable).

For all of the above activities, include a well sketch depicting the work, results of well tests/logging performed, service company tickets, and any other available information demonstrating how the work was/is to be performed. Also, specify whether depths are below ground surface, relative to Kelly bushing, etc.

CERTIFICATION: This form must be signed and dated by either: a responsible corporate officer for a corporation, by a general partner for a partnership, by the proprietor of a sole proprietorship, or by a principal executive or ranking elected official for a public agency.

PAPERWORK REDUCTION ACT NOTICE: The public reporting and recordkeeping burden for this collection of information is estimated to average between 6.0 and 7.9 hours per response, depending on the injection well class. Burden means the total time, effort, or financial resource expended by persons to generate, maintain, retain, or disclose or provide information to or for a Federal Agency. This includes the time needed to review instructions; develop, acquire, install, and utilize technology and systems for the purposes of collecting, validating, and verifying information, processing and maintaining information, and disclosing and providing information; adjust the existing ways to comply with any previously applicable instructions and requirements; train personnel to be able to respond to the collection of information; search data sources; complete and review the collection of information; and, transmit or otherwise disclose the information. An agency may not conduct or sponsor, and a person is not required to respond to, a collection of information unless it displays a currently valid OMB control number. Send comments on the Agency's need for this information, the accuracy of the provided burden estimates, and any suggested methods for minimizing respondent burden, including the use of automated collection techniques to Director, Collection Strategies Division, U.S. Environmental Protection Agency (2822), 1200 Pennsylvania Ave., NW., Washington, D.C. 20460. Include the OMB control number in any correspondence. Do not send the completed forms to this address.

AS-BUILT COREHOLE 401MF

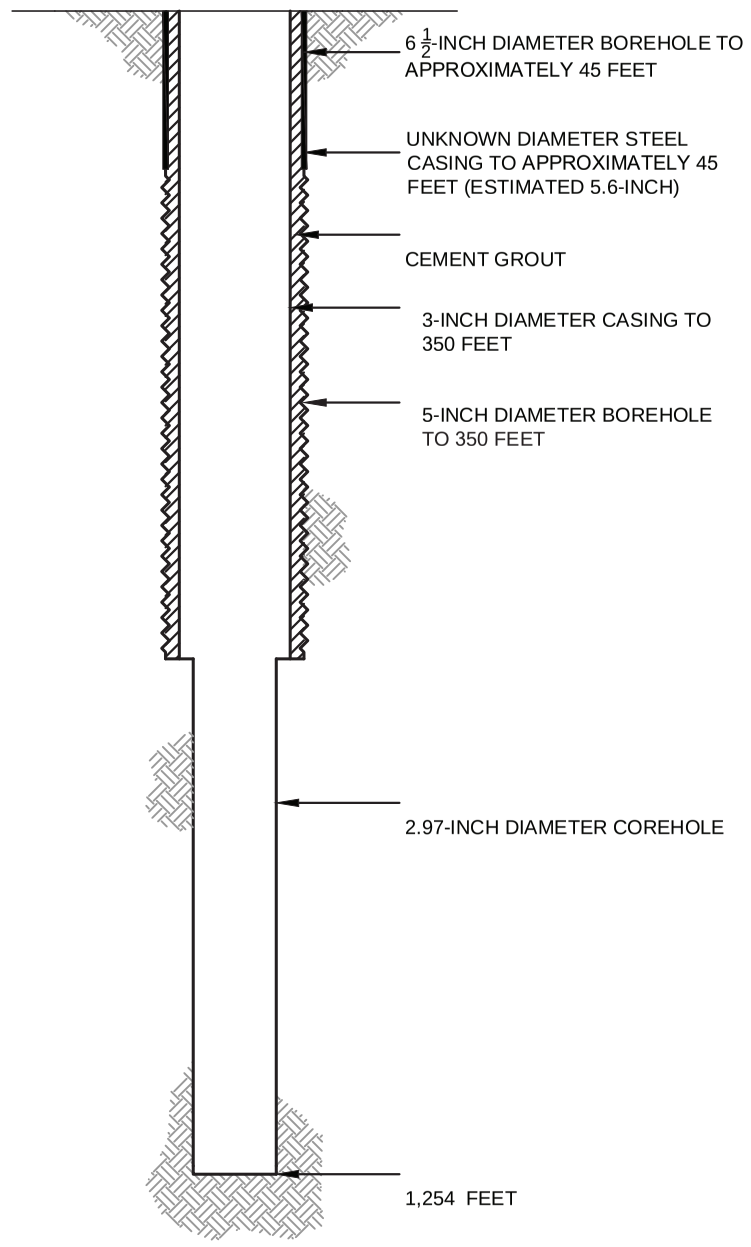

PROPOSED PLUGGING AND ABANDONMENT COREHOLE 401MF

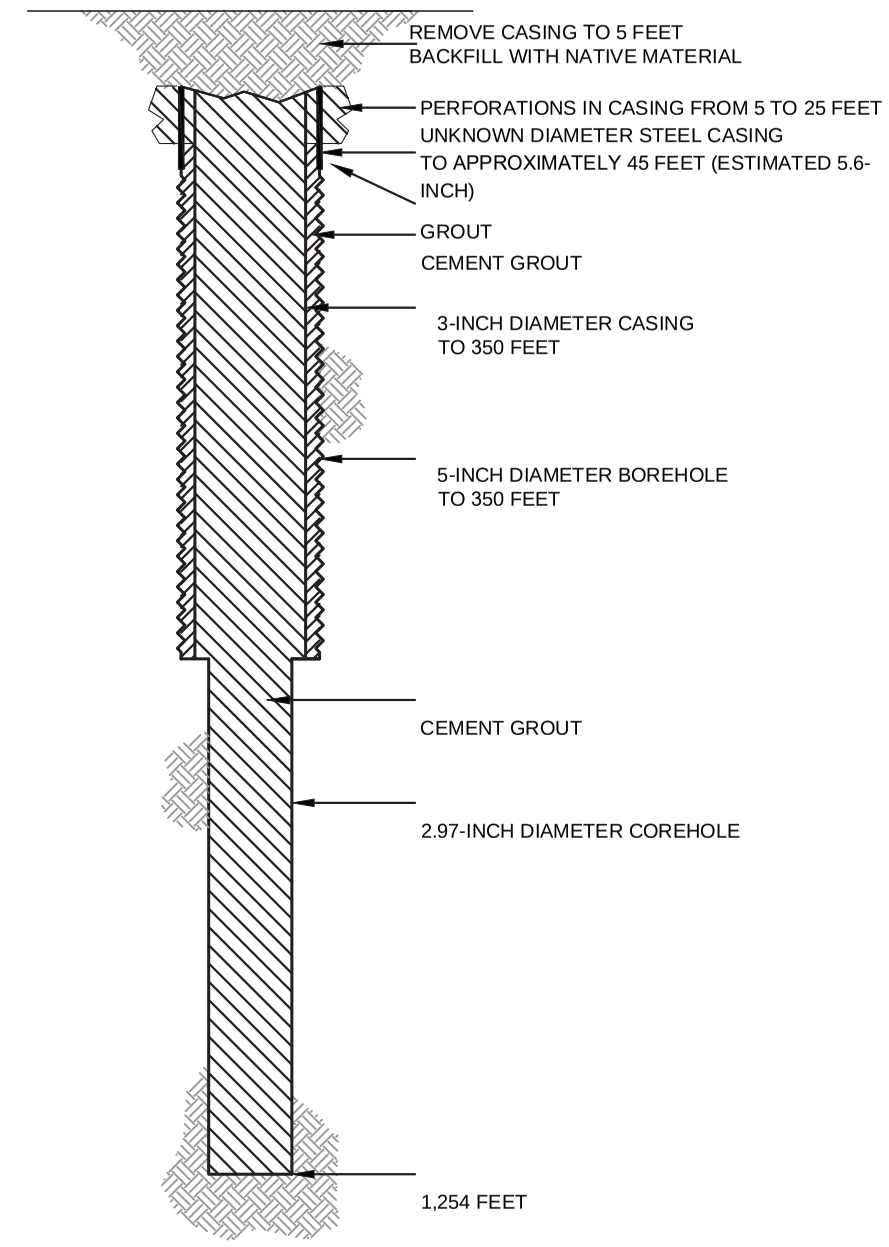

HALEY ALDRICH

FLORENCE COPPER, INC.
FLORENCE, ARIZONA

COREHOLE 401MF DIAGRAM

FLORENCE COPPER INC.

NOT TO SCALE
SEPTEMBER 2019

FIGURE 1

MOBINI, GITA Printed: 4/21/2017 12:00 PM Layout: ABANDON (2)
G:\PROJECTS\CURIS RESOURCES\38706-CURIS FEASIBILITY\DRAWINGS\EPA\WELL ABANDON\415S_ABANDON.DWG

OMB No. 2040-0042 Approval Expires 4/30/2022

United States Environmental Protection Agency

EPA

WELL REWORK RECORD, PLUGGING AND ABANDONMENT PLAN, OR PLUGGING AND ABANDONMENT AFFIDAVIT

Name and Address, Phone Number and/or Email of Permittee

Florence Copper Project
1575 W Hunt Hwy,
Florence, AZ 85132

Permit or EPA ID Number	API Number	Full Well Name
R9UIC-AZ3-FY11-1		402MF

State	County
Arizona	Pinal

Locate well in two directions from nearest lines of quarter section and drilling unit

Latitude 33.04854468

Longitude -111.4256761

Surface Location

SW **1/4 of** SE **1/4 of Section** 28 **Township** 4S **Range** 9E

_____ **ft. from (N/S)** _____ **Line of quarter section**

_____ **ft. from (E/W)** _____ **Line of quarter section.**

Well Class	Timing of Action (pick one)	Type of Action (pick one)
☐ Class I ☐ Class II ☑ Class III ☐ Class V	☑ Notice Prior to Work Date Expected to Commence March 2021 ☐ Report After Work Date Work Ended	☐ Well Rework ☑ Plugging and Abandonment ☐ Conversion to a Non-Injection Well

Provide a narrative description of the work planned to be performed, or that was performed. Use additional pages as necessary. See instructions.

A workover rig capable of performing the required abandonment operations at the required depths will be moved in and set up over the core hole. The core hole will be inspected to determine the depth to which the hole remains open and if any obstructions are present in the core hole; the presence and condition of any existing collar will also be documented. If necessary, the core hole will be cleaned out to a depth of at least 100 feet below the bedrock-LBFU contact to enable placement of cement seals.

If collar is present, an attempt will be made to remove it. If removal of the collar is not feasible, it will be left in the hole and perforated as needed to allow an annular seal to be placed to a depth of at least 25 feet bgs. In areas of agricultural use, the surface casing will be cut at least 5 feet bgs and removed.

If the collar cannot be removed, it will be perforated from at least 20 feet below the bedrock-LBFU contact to at least 20 feet above the contact; from at least 20 feet below the base of the MFGU to at least 20 feet above the top of the MFGU; and from at least 25 feet bgs to 5 feet bgs.

A tremie pipe will be used to place Type V cement in the open core hole from the bottom of the core hole to the top of the core hole. Cement retainers, as described above, will be used to force cement grout into the annulus and behind perforated intervals, as necessary.

If the hole has been obstructed, as much cement as possible will be placed from 100 feet below the LBFU-bedrock contact to the top of the core hole.

The volume of Type V cement will be recorded and will not be less than the estimated volume of material required to fill each interval. All cement grout will consist of Type V cement, or equivalent approved in accordance with the UIC Permit.

Certification

I certify under the penalty of law that I have personally examined and am familiar with the information submitted in this document and all attachments and that, based on my inquiry of those individuals immediately responsible for obtaining the information, I believe that the information is true, accurate, and complete. I am aware that there are significant penalties for submitting false information, including the possibliity of fine and imprisonment. (Ref. 40 CFR § 144.32)

Name and Official Title *(Please type or print)*	Signature	Date Signed
Dan Johnson, VP - General Manager		10/3/2019

INSTRUCTIONS FOR FORM 7520-19

This form replaces forms 7520-12 and 7520-14. Use this form only when work is planned or has occurred that affects the well's construction or operation as an injection well, including work on the casing, tubing or packer (or for shallow Class V wells, the subsurface fluid emplacement network). Use one form per injection well. While reports or other information developed by contractors or service companies may be attached, this form must be signed by a responsible entity as described at 40 CFR 144.32. Note: operators closing Class V wells should use Form 7520-17.

NAME, ADDRESS, PHONE AND/OR EMAIL OF PERMITTEE: Enter the name and street address, city/town, state, and ZIP code of the permittee. Also provide an email address (if available) and/or a phone number.

PERMIT OR EPA ID NUMBER: Enter the well identification number or permit number assigned to the well by the EPA or the permitting authority.

API NUMBER: Enter the number assigned by the local jurisdiction (usually a State Oil and Gas Agency) using the American Petroleum Institute standard numbering system.

FULL WELL NAME: Enter the full name of the well or project.

Enter the **STATE** and **COUNTY** where the well is located. For States that do not have counties, use the name of that State's equivalent jurisdiction at a more local level.

WELL LOCATION: Fill in the complete township, range, and section to the nearest quarter-quarter section. A township is north or south of the baseline, and a range is east or west of the principal meridian (e.g., T12N, R34W). Also include the distance, in feet, from the nearest north or south line and nearest east or west line of the quarter-section. Also, enter the **latitude** and **longitude** of the well in decimal degrees, to five or six places if possible; be sure to include a negative sign for the longitude of a well in the Western Hemisphere and a negative sign for the latitude of a well in the Southern Hemisphere.

Enter the **WELL CLASS,** i.e., the class of injection well as defined in 40 CFR 144.6.

TIMING OF THE ACTION: Check ***Notice prior to work*** if the activity has not yet occurred (i.e., is planned). Check ***Report after work*** if the activity described has already occurred. As appropriate, include the date the activity is expected to start or the date the activity was completed. (Note this may not be available, e.g., for a plugging plan submitted with a permit application.)

TYPE OF ACTION: Check the appropriate box to describe the kind of activity being reported. Check ***Well Rework*** for work that was/will be performed on the well after it has already been in operation as an injection well. Check ***Plugging and Abandonment*** to report on plans for or descriptions of final closure/plugging after use as an injection well. Check ***Conversion to a Non-Injection Well*** if the well is to be converted to something other than an injection well.

Provide a **NARRATIVE DESCRIPTION** of the work planned to be performed, or that was performed. The narrative should include a description of the main procedures planned or that occurred during the work activity. A service company report, daily report, or similar document may be attached if it includes all the requested information and is clear and legible.

For well reworks, include the following information: The reason for the well rework; depths of activity; type of activity; changes to injection well configuration, well casing, or cement behind casing; any plug added to the well and its depth; any newly drilled interval and its depth; method(s) to demonstrate that the well has mechanical integrity (as applicable); and any deviations from the approved rework plan (as applicable).

For a well plugging plan, include the following information: Reason for the well plugging; number of plugs placed, and their depths; materials used as plugs (e.g., cast iron bridge plug, cement, cement retainer); method to set plugs; and wait-on-cement times, if any. Also provide one or more cost estimates from an independent firm in the business of plugging and abandoning wells to plug the well as described in the plan.

For well plugging affidavit, include the following information: Reason for the well plugging; number of plugs placed, and their depths; materials used as plugs (e.g., cast iron bridge plug, cement, cement retainer); method to set plugs; wait-on-cement times, if any; and any deviations from the approved plugging plan (if applicable).

For conversion to a non-injection well, include the following information: Depths of activity; type of activity; changes to injection well configuration, well casing, or cement behind casing; any plug added to the well and its depth; any newly drilled interval and its depth; depths of new perforations; and method(s) to demonstrate that the well has mechanical integrity (as applicable).

For all of the above activities, include a well sketch depicting the work, results of well tests/logging performed, service company tickets, and any other available information demonstrating how the work was/is to be performed. Also, specify whether depths are below ground surface, relative to Kelly bushing, etc.

CERTIFICATION: This form must be signed and dated by either: a responsible corporate officer for a corporation, by a general partner for a partnership, by the proprietor of a sole proprietorship, or by a principal executive or ranking elected official for a public agency.

PAPERWORK REDUCTION ACT NOTICE: The public reporting and recordkeeping burden for this collection of information is estimated to average between 6.0 and 7.9 hours per response, depending on the injection well class. Burden means the total time, effort, or financial resource expended by persons to generate, maintain, retain, or disclose or provide information to or for a Federal Agency. This includes the time needed to review instructions; develop, acquire, install, and utilize technology and systems for the purposes of collecting, validating, and verifying information, processing and maintaining information, and disclosing and providing information; adjust the existing ways to comply with any previously applicable instructions and requirements; train personnel to be able to respond to the collection of information; search data sources; complete and review the collection of information; and, transmit or otherwise disclose the information. An agency may not conduct or sponsor, and a person is not required to respond to, a collection of information unless it displays a currently valid OMB control number. Send comments on the Agency's need for this information, the accuracy of the provided burden estimates, and any suggested methods for minimizing respondent burden, including the use of automated collection techniques to Director, Collection Strategies Division, U.S. Environmental Protection Agency (2822), 1200 Pennsylvania Ave., NW., Washington, D.C. 20460. Include the OMB control number in any correspondence. Do not send the completed forms to this address.

AS-BUILT COREHOLE 402MF

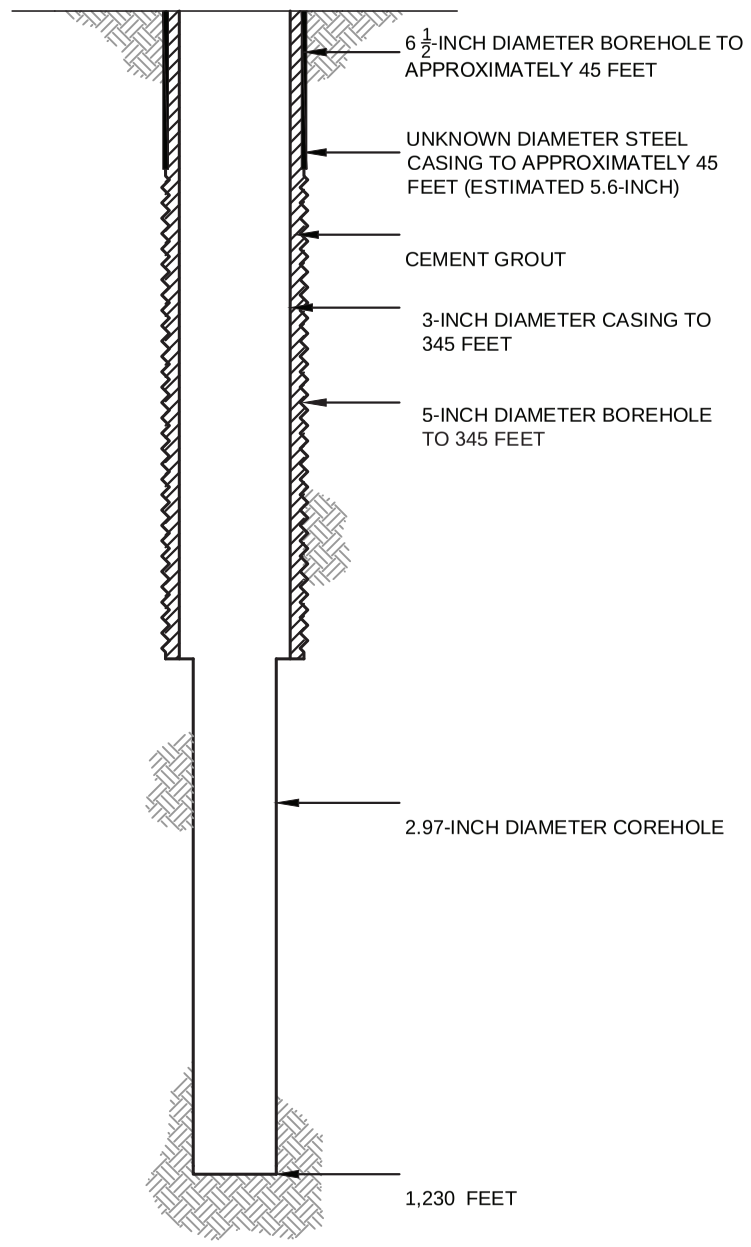

PROPOSED PLUGGING AND ABANDONMENT COREHOLE 402MF

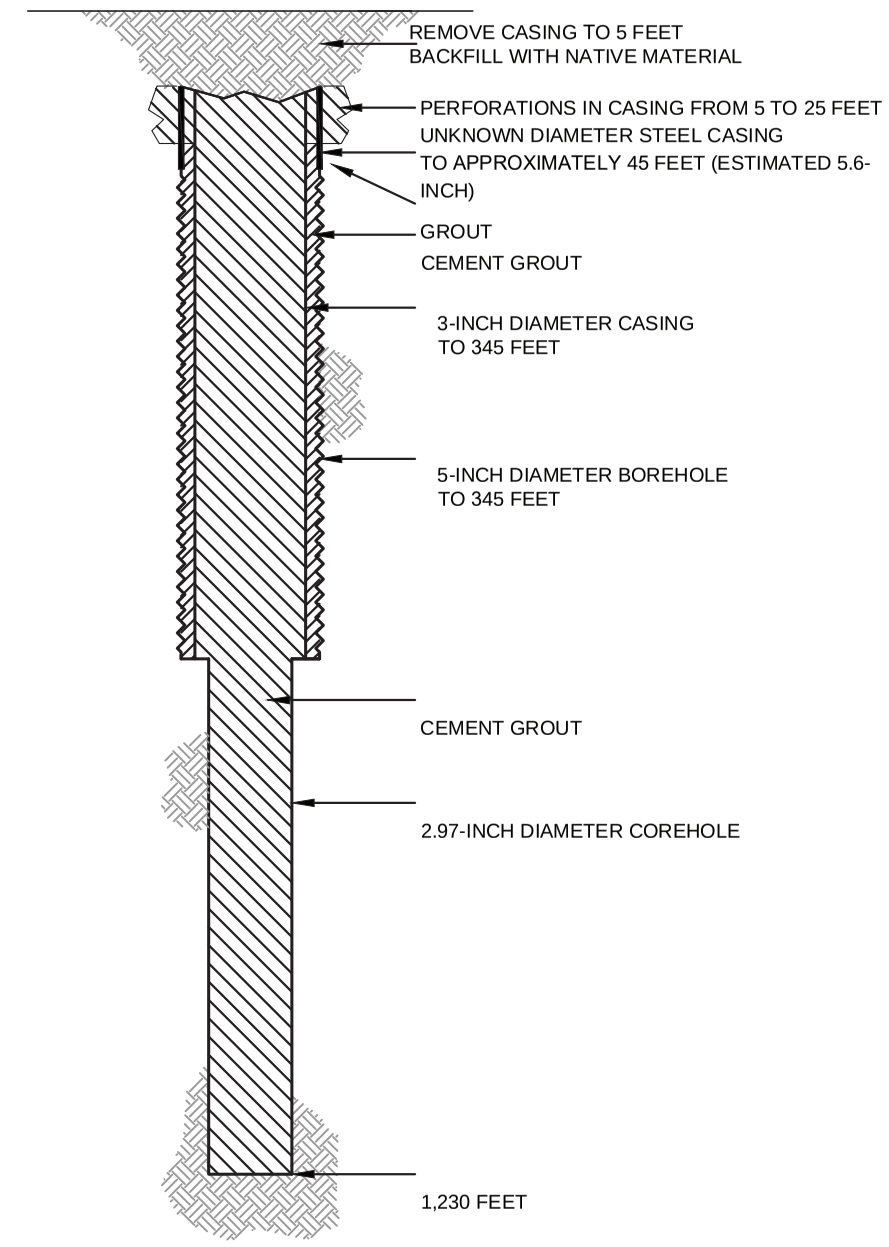

HALEY ALDRICH

FLORENCE COPPER, INC.
FLORENCE, ARIZONA

COREHOLE 402MF DIAGRAM

FLORENCE COPPER INC.

NOT TO SCALE
SEPTEMBER 2019

FIGURE 1

MOBINI, GITA Printed: 4/21/2017 12:00 PM Layout: ABANDON (2)
G:\PROJECTS\CURIS RESOURCES\38706-CURIS FEASIBILITY\DRAWINGS\EPA\WELL ABANDON\415S_ABANDON.DWG

OMB No. 2040-0042 Approval Expires 4/30/2022

United States Environmental Protection Agency

WELL REWORK RECORD, PLUGGING AND ABANDONMENT PLAN, OR PLUGGING AND ABANDONMENT AFFIDAVIT

Name and Address, Phone Number and/or Email of Permittee

Florence Copper Project
1575 W Hunt Hwy,
Florence, AZ 85132

Permit or EPA ID Number	API Number	Full Well Name
R9UIC-AZ3-FY11-1		403MF

State	County
Arizona	Pinal

Locate well in two directions from nearest lines of quarter section and drilling unit

Latitude 33.04899749

Longitude -111.4244497

Surface Location

SE **1/4 of** SE **1/4 of Section** 28 **Township** 4S **Range** 9E

_____ **ft. from (N/S)** _____ **Line of quarter section**

_____ **ft. from (E/W)** _____ **Line of quarter section.**

Well Class	Timing of Action (pick one)	Type of Action (pick one)
☐ Class I ☐ Class II ☑ Class III ☐ Class V	☑ Notice Prior to Work Date Expected to Commence March 2021 ☐ Report After Work Date Work Ended	☐ Well Rework ☑ Plugging and Abandonment ☐ Conversion to a Non-Injection Well

Provide a narrative description of the work planned to be performed, or that was performed. Use additional pages as necessary. See instructions.

A workover rig capable of performing the required abandonment operations at the required depths will be moved in and set up over the core hole. The core hole will be inspected to determine the depth to which the hole remains open and if any obstructions are present in the core hole; the presence and condition of any existing collar will also be documented. If necessary, the core hole will be cleaned out to a depth of at least 100 feet below the bedrock-LBFU contact to enable placement of cement seals.

If collar is present, an attempt will be made to remove it. If removal of the collar is not feasible, it will be left in the hole and perforated as needed to allow an annular seal to be placed to a depth of at least 25 feet bgs. In areas of agricultural use, the surface casing will be cut at least 5 feet bgs and removed.

If the collar cannot be removed, it will be perforated from at least 20 feet below the bedrock-LBFU contact to at least 20 feet above the contact; from at least 20 feet below the base of the MFGU to at least 20 feet above the top of the MFGU; and from at least 25 feet bgs to 5 feet bgs.

A tremie pipe will be used to place Type V cement in the open core hole from the bottom of the core hole to the top of the core hole. Cement retainers, as described above, will be used to force cement grout into the annulus and behind perforated intervals, as necessary.

If the hole has been obstructed, as much cement as possible will be placed from 100 feet below the LBFU-bedrock contact to the top of the core hole.

The volume of Type V cement will be recorded and will not be less than the estimated volume of material required to fill each interval. All cement grout will consist of Type V cement, or equivalent approved in accordance with the UIC Permit.

Certification

I certify under the penalty of law that I have personally examined and am familiar with the information submitted in this document and all attachments and that, based on my inquiry of those individuals immediately responsible for obtaining the information, I believe that the information is true, accurate, and complete. I am aware that there are significant penalties for submitting false information, including the possibliity of fine and imprisonment. (Ref. 40 CFR § 144.32)

Name and Official Title *(Please type or print)*	Signature	Date Signed
Dan Johnson, VP - General Manager		10/3/2019

INSTRUCTIONS FOR FORM 7520-19

This form replaces forms 7520-12 and 7520-14. Use this form only when work is planned or has occurred that affects the well's construction or operation as an injection well, including work on the casing, tubing or packer (or for shallow Class V wells, the subsurface fluid emplacement network). Use one form per injection well. While reports or other information developed by contractors or service companies may be attached, this form must be signed by a responsible entity as described at 40 CFR 144.32. Note: operators closing Class V wells should use Form 7520-17.

NAME, ADDRESS, PHONE AND/OR EMAIL OF PERMITTEE: Enter the name and street address, city/town, state, and ZIP code of the permittee. Also provide an email address (if available) and/or a phone number.

PERMIT OR EPA ID NUMBER: Enter the well identification number or permit number assigned to the well by the EPA or the permitting authority.

API NUMBER: Enter the number assigned by the local jurisdiction (usually a State Oil and Gas Agency) using the American Petroleum Institute standard numbering system.

FULL WELL NAME: Enter the full name of the well or project.

Enter the **STATE** and **COUNTY** where the well is located. For States that do not have counties, use the name of that State's equivalent jurisdiction at a more local level.

WELL LOCATION: Fill in the complete township, range, and section to the nearest quarter-quarter section. A township is north or south of the baseline, and a range is east or west of the principal meridian (e.g., T12N, R34W). Also include the distance, in feet, from the nearest north or south line and nearest east or west line of the quarter-section. Also, enter the **latitude** and **longitude** of the well in decimal degrees, to five or six places if possible; be sure to include a negative sign for the longitude of a well in the Western Hemisphere and a negative sign for the latitude of a well in the Southern Hemisphere.

Enter the **WELL CLASS,** i.e., the class of injection well as defined in 40 CFR 144.6.

TIMING OF THE ACTION: Check ***Notice prior to work*** if the activity has not yet occurred (i.e., is planned). Check ***Report after work*** if the activity described has already occurred. As appropriate, include the date the activity is expected to start or the date the activity was completed. (Note this may not be available, e.g., for a plugging plan submitted with a permit application.)

TYPE OF ACTION: Check the appropriate box to describe the kind of activity being reported. Check ***Well Rework*** for work that was/will be performed on the well after it has already been in operation as an injection well. Check ***Plugging and Abandonment*** to report on plans for or descriptions of final closure/plugging after use as an injection well. Check ***Conversion to a Non-Injection Well*** if the well is to be converted to something other than an injection well.

Provide a **NARRATIVE DESCRIPTION** of the work planned to be performed, or that was performed. The narrative should include a description of the main procedures planned or that occurred during the work activity. A service company report, daily report, or similar document may be attached if it includes all the requested information and is clear and legible.

For well reworks, include the following information: The reason for the well rework; depths of activity; type of activity; changes to injection well configuration, well casing, or cement behind casing; any plug added to the well and its depth; any newly drilled interval and its depth; method(s) to demonstrate that the well has mechanical integrity (as applicable); and any deviations from the approved rework plan (as applicable).

For a well plugging plan, include the following information: Reason for the well plugging; number of plugs placed, and their depths; materials used as plugs (e.g., cast iron bridge plug, cement, cement retainer); method to set plugs; and wait-on-cement times, if any. Also provide one or more cost estimates from an independent firm in the business of plugging and abandoning wells to plug the well as described in the plan.

For well plugging affidavit, include the following information: Reason for the well plugging; number of plugs placed, and their depths; materials used as plugs (e.g., cast iron bridge plug, cement, cement retainer); method to set plugs; wait-on-cement times, if any; and any deviations from the approved plugging plan (if applicable).

For conversion to a non-injection well, include the following information: Depths of activity; type of activity; changes to injection well configuration, well casing, or cement behind casing; any plug added to the well and its depth; any newly drilled interval and its depth; depths of new perforations; and method(s) to demonstrate that the well has mechanical integrity (as applicable).

For all of the above activities, include a well sketch depicting the work, results of well tests/logging performed, service company tickets, and any other available information demonstrating how the work was/is to be performed. Also, specify whether depths are below ground surface, relative to Kelly bushing, etc.

CERTIFICATION: This form must be signed and dated by either: a responsible corporate officer for a corporation, by a general partner for a partnership, by the proprietor of a sole proprietorship, or by a principal executive or ranking elected official for a public agency.

PAPERWORK REDUCTION ACT NOTICE: The public reporting and recordkeeping burden for this collection of information is estimated to average between 6.0 and 7.9 hours per response, depending on the injection well class. Burden means the total time, effort, or financial resource expended by persons to generate, maintain, retain, or disclose or provide information to or for a Federal Agency. This includes the time needed to review instructions; develop, acquire, install, and utilize technology and systems for the purposes of collecting, validating, and verifying information, processing and maintaining information, and disclosing and providing information; adjust the existing ways to comply with any previously applicable instructions and requirements; train personnel to be able to respond to the collection of information; search data sources; complete and review the collection of information; and, transmit or otherwise disclose the information. An agency may not conduct or sponsor, and a person is not required to respond to, a collection of information unless it displays a currently valid OMB control number. Send comments on the Agency's need for this information, the accuracy of the provided burden estimates, and any suggested methods for minimizing respondent burden, including the use of automated collection techniques to Director, Collection Strategies Division, U.S. Environmental Protection Agency (2822), 1200 Pennsylvania Ave., NW., Washington, D.C. 20460. Include the OMB control number in any correspondence. Do not send the completed forms to this address.

AS-BUILT COREHOLE 403MF

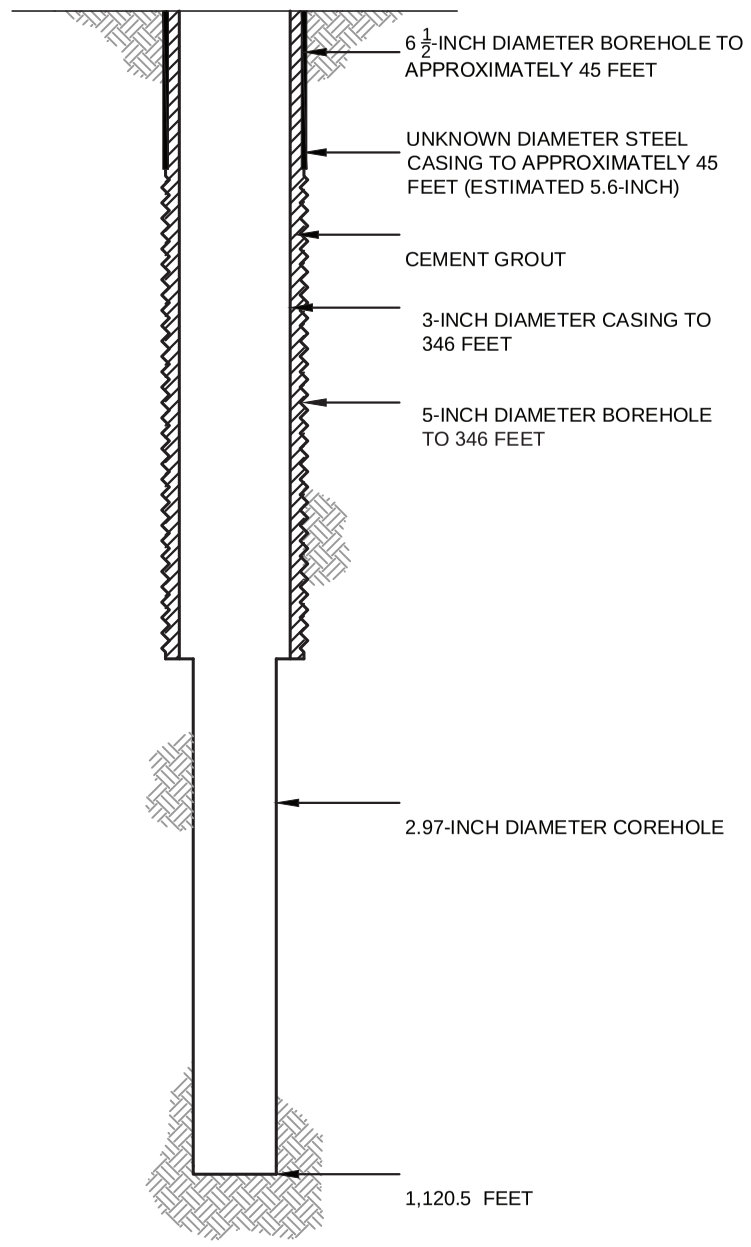

PROPOSED PLUGGING AND ABANDONMENT COREHOLE 403MF

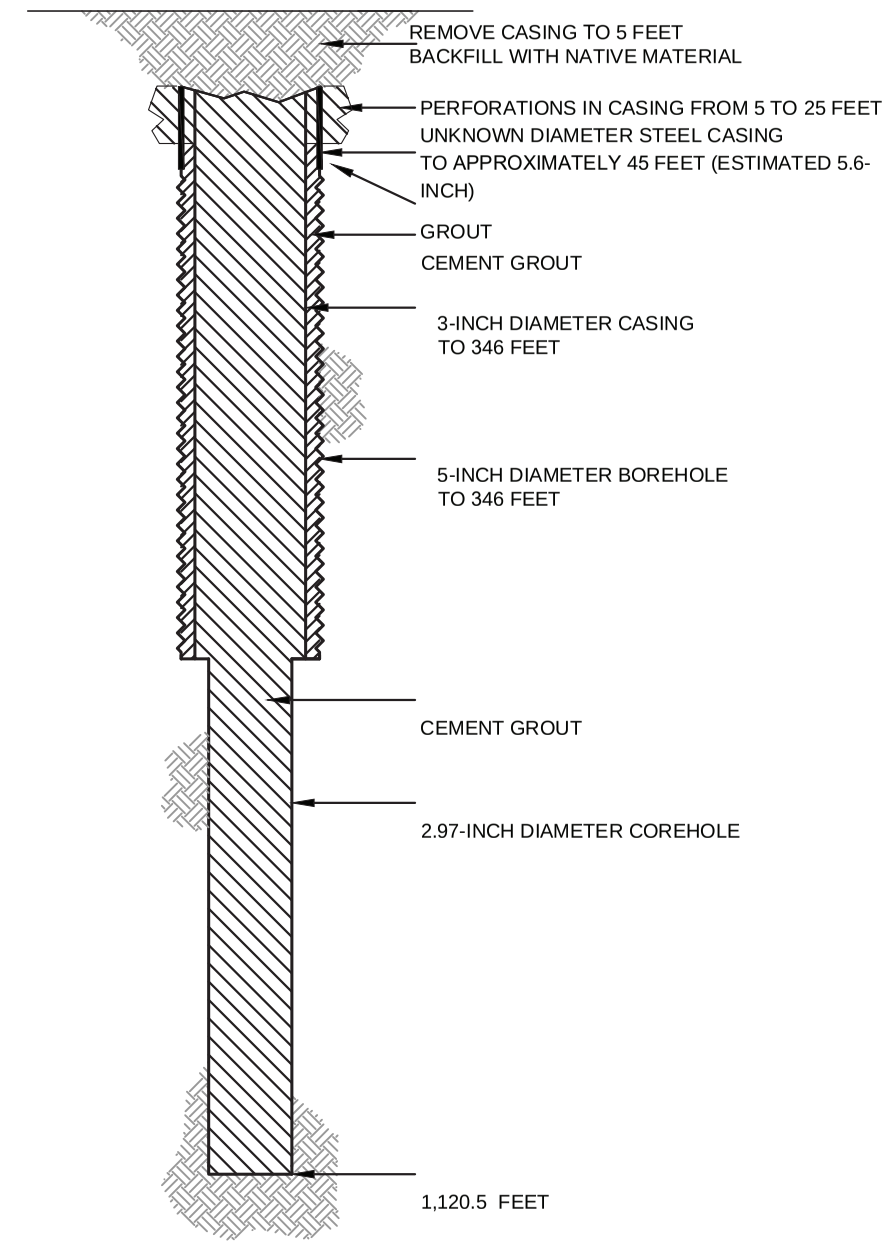

HALEY ALDRICH

FLORENCE COPPER, INC.
FLORENCE, ARIZONA

COREHOLE 403MF DIAGRAM

FLORENCE COPPER INC.

NOT TO SCALE
SEPTEMBER 2019

FIGURE 1

MOBINI, GITA Printed: 4/21/2017 12:00 PM Layout: ABANDON (2)
G:\PROJECTS\CURIS RESOURCES\38706-CURIS FEASIBILITY\DRAWINGS\EPA\WELL ABANDON\415S_ABANDON.DWG

OMB No. 2040-0042 Approval Expires 4/30/2022

United States Environmental Protection Agency

WELL REWORK RECORD, PLUGGING AND ABANDONMENT PLAN, OR PLUGGING AND ABANDONMENT AFFIDAVIT

Name and Address, Phone Number and/or Email of Permittee

Florence Copper Project
1575 W Hunt Hwy,
Florence, AZ 85132

Permit or EPA ID Number	API Number	Full Well Name
R9UIC-AZ3-FY11-1		404S

State	County
Arizona	Pinal

Locate well in two directions from nearest lines of quarter section and drilling unit

Latitude 33.05211825

Longitude -111.4264722

Surface Location

NW **1/4 of** SE **1/4 of Section** 28 **Township** 4S **Range** 9E

_____ **ft. from (N/S)** _____ **Line of quarter section**

_____ **ft. from (E/W)** _____ **Line of quarter section.**

Well Class	Timing of Action (pick one)	Type of Action (pick one)
☐ Class I ☐ Class II ☑ Class III ☐ Class V	☑ Notice Prior to Work Date Expected to Commence March 2021 ☐ Report After Work Date Work Ended	☐ Well Rework ☑ Plugging and Abandonment ☐ Conversion to a Non-Injection Well

Provide a narrative description of the work planned to be performed, or that was performed. Use additional pages as necessary. See instructions.

A workover rig capable of performing the required abandonment operations at the required depths will be moved in and set up over the core hole. The core hole will be inspected to determine the depth to which the hole remains open and if any obstructions are present in the core hole; the presence and condition of any existing collar will also be documented. If necessary, the core hole will be cleaned out to a depth of at least 100 feet below the bedrock-LBFU contact to enable placement of cement seals.

If collar is present, an attempt will be made to remove it. If removal of the collar is not feasible, it will be left in the hole and perforated as needed to allow an annular seal to be placed to a depth of at least 25 feet bgs. In areas of agricultural use, the surface casing will be cut at least 5 feet bgs and removed.

If the collar cannot be removed, it will be perforated from at least 20 feet below the bedrock-LBFU contact to at least 20 feet above the contact; from at least 20 feet below the base of the MFGU to at least 20 feet above the top of the MFGU; and from at least 25 feet bgs to 5 feet bgs.

A tremie pipe will be used to place Type V cement in the open core hole from the bottom of the core hole to the top of the core hole. Cement retainers, as described above, will be used to force cement grout into the annulus and behind perforated intervals, as necessary.

If the hole has been obstructed, as much cement as possible will be placed from 100 feet below the LBFU-bedrock contact to the top of the core hole.

The volume of Type V cement will be recorded and will not be less than the estimated volume of material required to fill each interval. All cement grout will consist of Type V cement, or equivalent approved in accordance with the UIC Permit.

Certification

I certify under the penalty of law that I have personally examined and am familiar with the information submitted in this document and all attachments and that, based on my inquiry of those individuals immediately responsible for obtaining the information, I believe that the information is true, accurate, and complete. I am aware that there are significant penalties for submitting false information, including the possibliity of fine and imprisonment. (Ref. 40 CFR § 144.32)

Name and Official Title *(Please type or print)*	Signature	Date Signed
Dan Johnson, VP - General Manager		10/3/2019

INSTRUCTIONS FOR FORM 7520-19

This form replaces forms 7520-12 and 7520-14. Use this form only when work is planned or has occurred that affects the well's construction or operation as an injection well, including work on the casing, tubing or packer (or for shallow Class V wells, the subsurface fluid emplacement network). Use one form per injection well. While reports or other information developed by contractors or service companies may be attached, this form must be signed by a responsible entity as described at 40 CFR 144.32. Note: operators closing Class V wells should use Form 7520-17.

NAME, ADDRESS, PHONE AND/OR EMAIL OF PERMITTEE: Enter the name and street address, city/town, state, and ZIP code of the permittee. Also provide an email address (if available) and/or a phone number.

PERMIT OR EPA ID NUMBER: Enter the well identification number or permit number assigned to the well by the EPA or the permitting authority.

API NUMBER: Enter the number assigned by the local jurisdiction (usually a State Oil and Gas Agency) using the American Petroleum Institute standard numbering system.

FULL WELL NAME: Enter the full name of the well or project.

Enter the **STATE** and **COUNTY** where the well is located. For States that do not have counties, use the name of that State's equivalent jurisdiction at a more local level.

WELL LOCATION: Fill in the complete township, range, and section to the nearest quarter-quarter section. A township is north or south of the baseline, and a range is east or west of the principal meridian (e.g., T12N, R34W). Also include the distance, in feet, from the nearest north or south line and nearest east or west line of the quarter-section. Also, enter the **latitude** and **longitude** of the well in decimal degrees, to five or six places if possible; be sure to include a negative sign for the longitude of a well in the Western Hemisphere and a negative sign for the latitude of a well in the Southern Hemisphere.

Enter the **WELL CLASS,** i.e., the class of injection well as defined in 40 CFR 144.6.

TIMING OF THE ACTION: Check ***Notice prior to work*** if the activity has not yet occurred (i.e., is planned). Check ***Report after work*** if the activity described has already occurred. As appropriate, include the date the activity is expected to start or the date the activity was completed. (Note this may not be available, e.g., for a plugging plan submitted with a permit application.)

TYPE OF ACTION: Check the appropriate box to describe the kind of activity being reported. Check ***Well Rework*** for work that was/will be performed on the well after it has already been in operation as an injection well. Check ***Plugging and Abandonment*** to report on plans for or descriptions of final closure/plugging after use as an injection well. Check ***Conversion to a Non-Injection Well*** if the well is to be converted to something other than an injection well.

Provide a **NARRATIVE DESCRIPTION** of the work planned to be performed, or that was performed. The narrative should include a description of the main procedures planned or that occurred during the work activity. A service company report, daily report, or similar document may be attached if it includes all the requested information and is clear and legible.

For well reworks, include the following information: The reason for the well rework; depths of activity; type of activity; changes to injection well configuration, well casing, or cement behind casing; any plug added to the well and its depth; any newly drilled interval and its depth; method(s) to demonstrate that the well has mechanical integrity (as applicable); and any deviations from the approved rework plan (as applicable).

For a well plugging plan, include the following information: Reason for the well plugging; number of plugs placed, and their depths; materials used as plugs (e.g., cast iron bridge plug, cement, cement retainer); method to set plugs; and wait-on-cement times, if any. Also provide one or more cost estimates from an independent firm in the business of plugging and abandoning wells to plug the well as described in the plan.

For well plugging affidavit, include the following information: Reason for the well plugging; number of plugs placed, and their depths; materials used as plugs (e.g., cast iron bridge plug, cement, cement retainer); method to set plugs; wait-on-cement times, if any; and any deviations from the approved plugging plan (if applicable).

For conversion to a non-injection well, include the following information: Depths of activity; type of activity; changes to injection well configuration, well casing, or cement behind casing; any plug added to the well and its depth; any newly drilled interval and its depth; depths of new perforations; and method(s) to demonstrate that the well has mechanical integrity (as applicable).

For all of the above activities, include a well sketch depicting the work, results of well tests/logging performed, service company tickets, and any other available information demonstrating how the work was/is to be performed. Also, specify whether depths are below ground surface, relative to Kelly bushing, etc.

CERTIFICATION: This form must be signed and dated by either: a responsible corporate officer for a corporation, by a general partner for a partnership, by the proprietor of a sole proprietorship, or by a principal executive or ranking elected official for a public agency.

PAPERWORK REDUCTION ACT NOTICE: The public reporting and recordkeeping burden for this collection of information is estimated to average between 6.0 and 7.9 hours per response, depending on the injection well class. Burden means the total time, effort, or financial resource expended by persons to generate, maintain, retain, or disclose or provide information to or for a Federal Agency. This includes the time needed to review instructions; develop, acquire, install, and utilize technology and systems for the purposes of collecting, validating, and verifying information, processing and maintaining information, and disclosing and providing information; adjust the existing ways to comply with any previously applicable instructions and requirements; train personnel to be able to respond to the collection of information; search data sources; complete and review the collection of information; and, transmit or otherwise disclose the information. An agency may not conduct or sponsor, and a person is not required to respond to, a collection of information unless it displays a currently valid OMB control number. Send comments on the Agency's need for this information, the accuracy of the provided burden estimates, and any suggested methods for minimizing respondent burden, including the use of automated collection techniques to Director, Collection Strategies Division, U.S. Environmental Protection Agency (2822), 1200 Pennsylvania Ave., NW., Washington, D.C. 20460. Include the OMB control number in any correspondence. Do not send the completed forms to this address.

AS-BUILT COREHOLE 404S

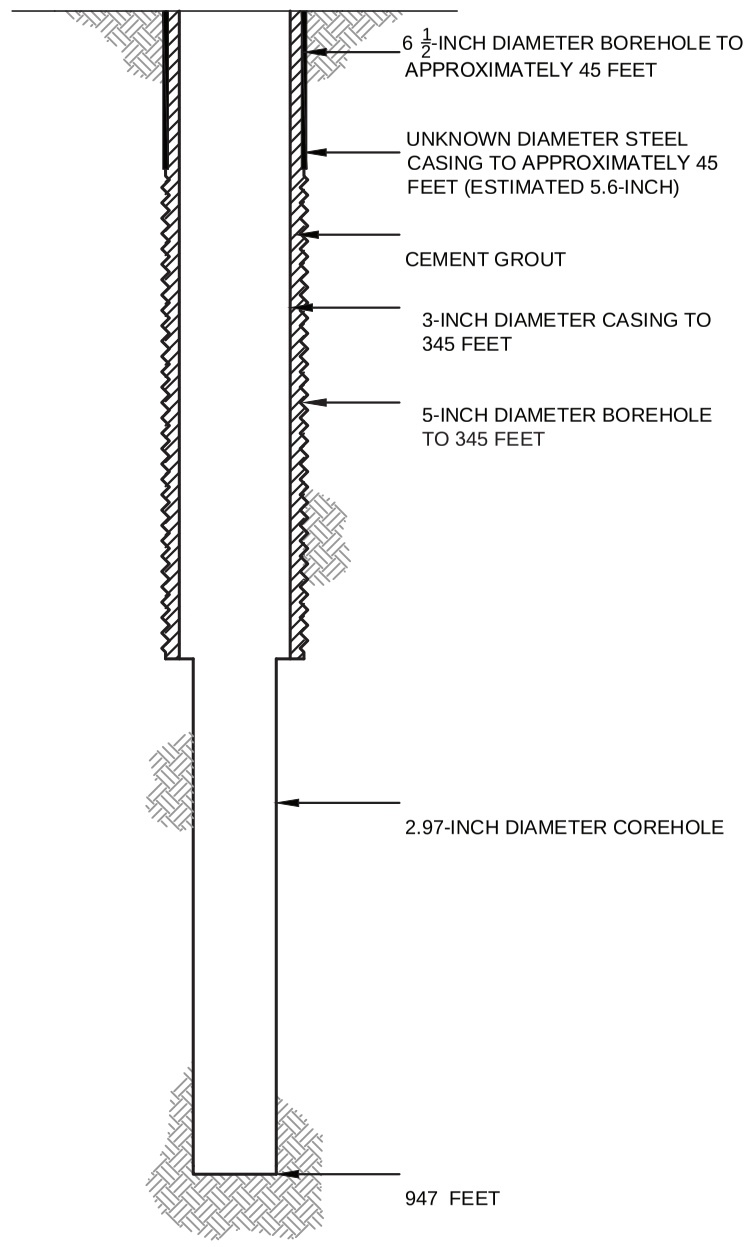

PROPOSED PLUGGING AND ABANDONMENT COREHOLE 404S

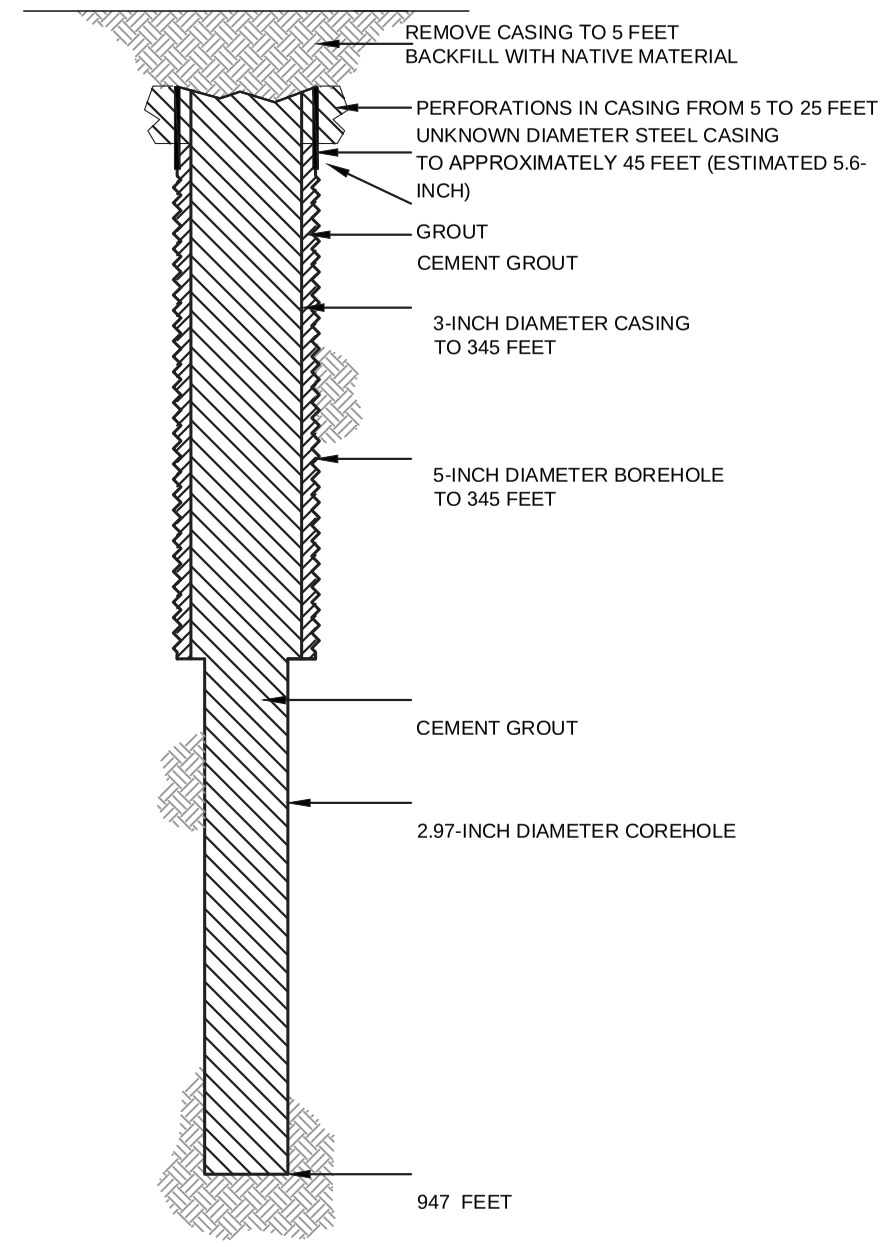

HALEY ALDRICH

FLORENCE COPPER, INC.
FLORENCE, ARIZONA

COREHOLE 404S DIAGRAM

FLORENCE COPPER INC.

NOT TO SCALE
SEPTEMBER 2019

FIGURE 1

MOBINI, GITA Printed: 4/21/2017 12:00 PM Layout: ABANDON (2)
G:\PROJECTS\CURIS RESOURCES\38706-CURIS FEASIBILITY\DRAWINGS\EPA\WELL ABANDON\415S_ABANDON.DWG

OMB No. 2040-0042 Approval Expires 4/30/2022

United States Environmental Protection Agency

WELL REWORK RECORD, PLUGGING AND ABANDONMENT PLAN, OR PLUGGING AND ABANDONMENT AFFIDAVIT

Name and Address, Phone Number and/or Email of Permittee

Florence Copper Project
1575 W Hunt Hwy,
Florence, AZ 85132

Permit or EPA ID Number	API Number	Full Well Name
R9UIC-AZ3-FY11-1		405S

State	County
Arizona	Pinal

Locate well in two directions from nearest lines of quarter section and drilling unit

Latitude 33.04973159

Longitude -111.4248536

Surface Location

NE **1/4 of** SE **1/4 of Section** 28 **Township** 4S **Range** 9E

_____ **ft. from (N/S)** _____ **Line of quarter section**

_____ **ft. from (E/W)** _____ **Line of quarter section.**

Well Class	Timing of Action (pick one)	Type of Action (pick one)
☐ Class I ☐ Class II ☑ Class III ☐ Class V	☑ Notice Prior to Work Date Expected to Commence March 2021 ☐ Report After Work Date Work Ended	☐ Well Rework ☑ Plugging and Abandonment ☐ Conversion to a Non-Injection Well

Provide a narrative description of the work planned to be performed, or that was performed. Use additional pages as necessary. See instructions.

A workover rig capable of performing the required abandonment operations at the required depths will be moved in and set up over the core hole. The core hole will be inspected to determine the depth to which the hole remains open and if any obstructions are present in the core hole; the presence and condition of any existing collar will also be documented. If necessary, the core hole will be cleaned out to a depth of at least 100 feet below the bedrock-LBFU contact to enable placement of cement seals.

If collar is present, an attempt will be made to remove it. If removal of the collar is not feasible, it will be left in the hole and perforated as needed to allow an annular seal to be placed to a depth of at least 25 feet bgs. In areas of agricultural use, the surface casing will be cut at least 5 feet bgs and removed.

If the collar cannot be removed, it will be perforated from at least 20 feet below the bedrock-LBFU contact to at least 20 feet above the contact; from at least 20 feet below the base of the MFGU to at least 20 feet above the top of the MFGU; and from at least 25 feet bgs to 5 feet bgs.

A tremie pipe will be used to place Type V cement in the open core hole from the bottom of the core hole to the top of the core hole. Cement retainers, as described above, will be used to force cement grout into the annulus and behind perforated intervals, as necessary.

If the hole has been obstructed, as much cement as possible will be placed from 100 feet below the LBFU-bedrock contact to the top of the core hole.

The volume of Type V cement will be recorded and will not be less than the estimated volume of material required to fill each interval. All cement grout will consist of Type V cement, or equivalent approved in accordance with the UIC Permit.

Certification

I certify under the penalty of law that I have personally examined and am familiar with the information submitted in this document and all attachments and that, based on my inquiry of those individuals immediately responsible for obtaining the information, I believe that the information is true, accurate, and complete. I am aware that there are significant penalties for submitting false information, including the possibliity of fine and imprisonment. (Ref. 40 CFR § 144.32)

Name and Official Title *(Please type or print)*	Signature	Date Signed
Dan Johnson, VP - General Manager		10/3/2019

INSTRUCTIONS FOR FORM 7520-19

This form replaces forms 7520-12 and 7520-14. Use this form only when work is planned or has occurred that affects the well's construction or operation as an injection well, including work on the casing, tubing or packer (or for shallow Class V wells, the subsurface fluid emplacement network). Use one form per injection well. While reports or other information developed by contractors or service companies may be attached, this form must be signed by a responsible entity as described at 40 CFR 144.32. Note: operators closing Class V wells should use Form 7520-17.

NAME, ADDRESS, PHONE AND/OR EMAIL OF PERMITTEE: Enter the name and street address, city/town, state, and ZIP code of the permittee. Also provide an email address (if available) and/or a phone number.

PERMIT OR EPA ID NUMBER: Enter the well identification number or permit number assigned to the well by the EPA or the permitting authority.

API NUMBER: Enter the number assigned by the local jurisdiction (usually a State Oil and Gas Agency) using the American Petroleum Institute standard numbering system.

FULL WELL NAME: Enter the full name of the well or project.

Enter the **STATE** and **COUNTY** where the well is located. For States that do not have counties, use the name of that State's equivalent jurisdiction at a more local level.

WELL LOCATION: Fill in the complete township, range, and section to the nearest quarter-quarter section. A township is north or south of the baseline, and a range is east or west of the principal meridian (e.g., T12N, R34W). Also include the distance, in feet, from the nearest north or south line and nearest east or west line of the quarter-section. Also, enter the **latitude** and **longitude** of the well in decimal degrees, to five or six places if possible; be sure to include a negative sign for the longitude of a well in the Western Hemisphere and a negative sign for the latitude of a well in the Southern Hemisphere.

Enter the **WELL CLASS,** i.e., the class of injection well as defined in 40 CFR 144.6.

TIMING OF THE ACTION: Check ***Notice prior to work*** if the activity has not yet occurred (i.e., is planned). Check ***Report after work*** if the activity described has already occurred. As appropriate, include the date the activity is expected to start or the date the activity was completed. (Note this may not be available, e.g., for a plugging plan submitted with a permit application.)

TYPE OF ACTION: Check the appropriate box to describe the kind of activity being reported. Check ***Well Rework*** for work that was/will be performed on the well after it has already been in operation as an injection well. Check ***Plugging and Abandonment*** to report on plans for or descriptions of final closure/plugging after use as an injection well. Check ***Conversion to a Non-Injection Well*** if the well is to be converted to something other than an injection well.

Provide a **NARRATIVE DESCRIPTION** of the work planned to be performed, or that was performed. The narrative should include a description of the main procedures planned or that occurred during the work activity. A service company report, daily report, or similar document may be attached if it includes all the requested information and is clear and legible.

For well reworks, include the following information: The reason for the well rework; depths of activity; type of activity; changes to injection well configuration, well casing, or cement behind casing; any plug added to the well and its depth; any newly drilled interval and its depth; method(s) to demonstrate that the well has mechanical integrity (as applicable); and any deviations from the approved rework plan (as applicable).

For a well plugging plan, include the following information: Reason for the well plugging; number of plugs placed, and their depths; materials used as plugs (e.g., cast iron bridge plug, cement, cement retainer); method to set plugs; and wait-on-cement times, if any. Also provide one or more cost estimates from an independent firm in the business of plugging and abandoning wells to plug the well as described in the plan.

For well plugging affidavit, include the following information: Reason for the well plugging; number of plugs placed, and their depths; materials used as plugs (e.g., cast iron bridge plug, cement, cement retainer); method to set plugs; wait-on-cement times, if any; and any deviations from the approved plugging plan (if applicable).

For conversion to a non-injection well, include the following information: Depths of activity; type of activity; changes to injection well configuration, well casing, or cement behind casing; any plug added to the well and its depth; any newly drilled interval and its depth; depths of new perforations; and method(s) to demonstrate that the well has mechanical integrity (as applicable).

For all of the above activities, include a well sketch depicting the work, results of well tests/logging performed, service company tickets, and any other available information demonstrating how the work was/is to be performed. Also, specify whether depths are below ground surface, relative to Kelly bushing, etc.

CERTIFICATION: This form must be signed and dated by either: a responsible corporate officer for a corporation, by a general partner for a partnership, by the proprietor of a sole proprietorship, or by a principal executive or ranking elected official for a public agency.

PAPERWORK REDUCTION ACT NOTICE: The public reporting and recordkeeping burden for this collection of information is estimated to average between 6.0 and 7.9 hours per response, depending on the injection well class. Burden means the total time, effort, or financial resource expended by persons to generate, maintain, retain, or disclose or provide information to or for a Federal Agency. This includes the time needed to review instructions; develop, acquire, install, and utilize technology and systems for the purposes of collecting, validating, and verifying information, processing and maintaining information, and disclosing and providing information; adjust the existing ways to comply with any previously applicable instructions and requirements; train personnel to be able to respond to the collection of information; search data sources; complete and review the collection of information; and, transmit or otherwise disclose the information. An agency may not conduct or sponsor, and a person is not required to respond to, a collection of information unless it displays a currently valid OMB control number. Send comments on the Agency's need for this information, the accuracy of the provided burden estimates, and any suggested methods for minimizing respondent burden, including the use of automated collection techniques to Director, Collection Strategies Division, U.S. Environmental Protection Agency (2822), 1200 Pennsylvania Ave., NW., Washington, D.C. 20460. Include the OMB control number in any correspondence. Do not send the completed forms to this address.

AS-BUILT COREHOLE 405S

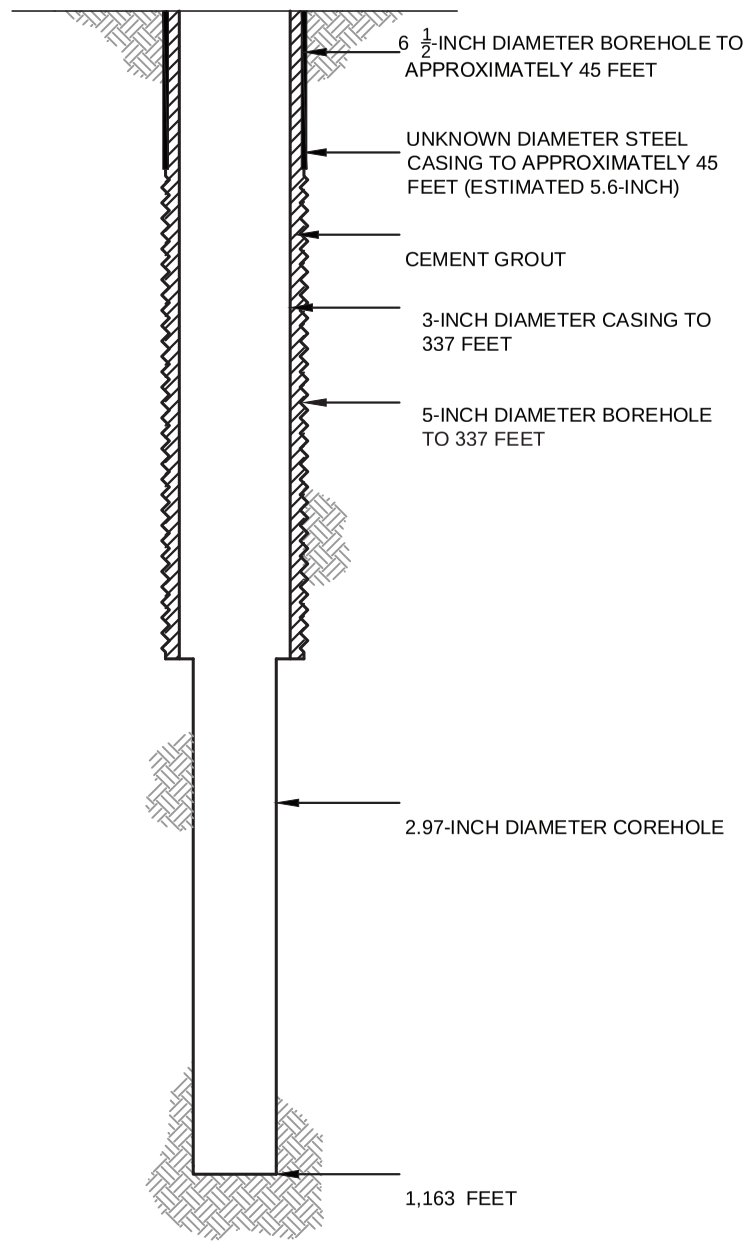

PROPOSED PLUGGING AND ABANDONMENT COREHOLE 405S

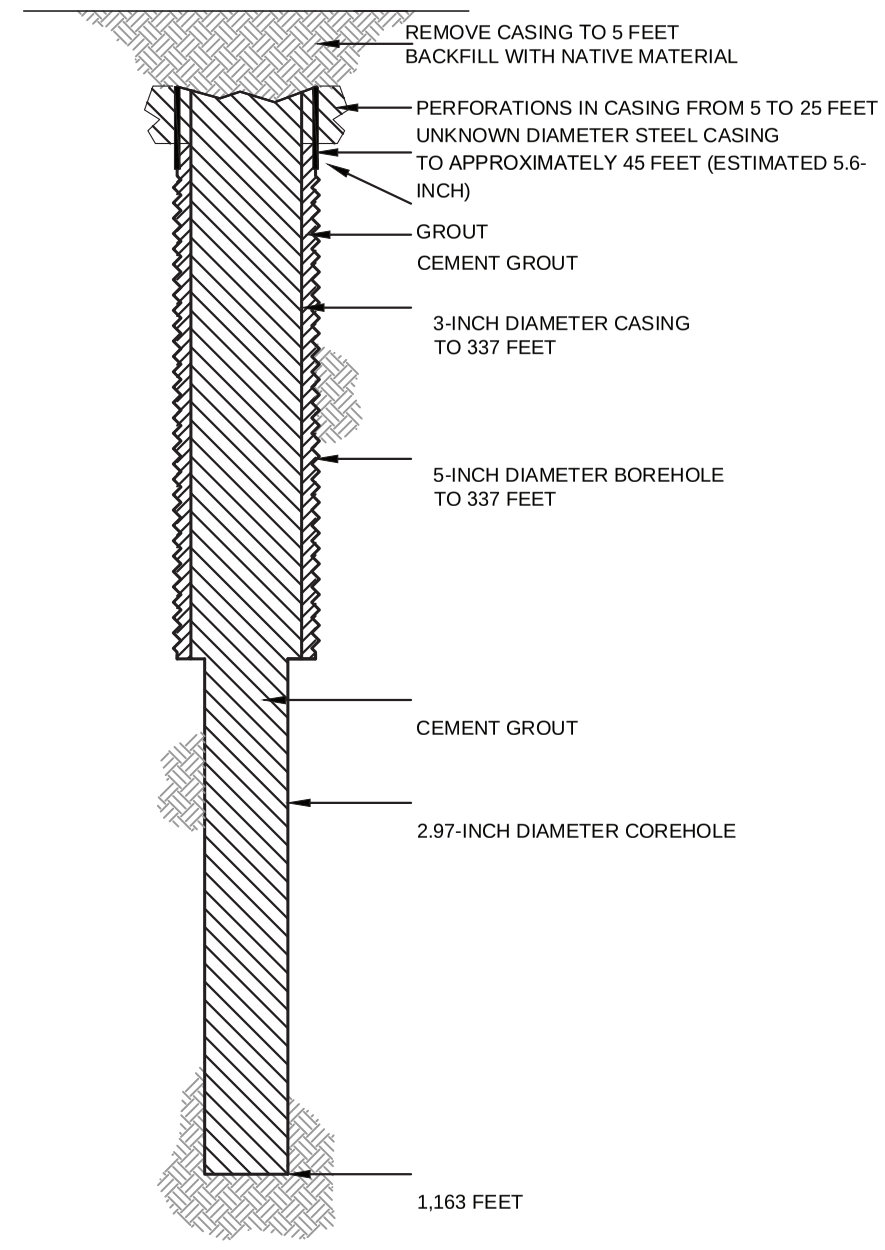

HALEY ALDRICH

FLORENCE COPPER, INC.
FLORENCE, ARIZONA

COREHOLE 405S DIAGRAM

FLORENCE COPPER INC.

NOT TO SCALE
SEPTEMBER 2019

FIGURE 1

MOBINI, GITA Printed: 4/21/2017 12:00 PM Layout: ABANDON (2)
G:\PROJECTS\CURIS RESOURCES\38706-CURIS FEASIBILITY\DRAWINGS\EPA\WELL ABANDON\415S_ABANDON.DWG

OMB No. 2040-0042 Approval Expires 4/30/2022

United States Environmental Protection Agency

WELL REWORK RECORD, PLUGGING AND ABANDONMENT PLAN, OR PLUGGING AND ABANDONMENT AFFIDAVIT

Name and Address, Phone Number and/or Email of Permittee

Florence Copper Project
1575 W Hunt Hwy,
Florence, AZ 85132

Permit or EPA ID Number	API Number	Full Well Name
R9UIC-AZ3-FY11-1		409MF

State	County
Arizona	Pinal

Locate well in two directions from nearest lines of quarter section and drilling unit

Latitude 33.04796401

Longitude -111.4293507

Surface Location

SW **1/4 of** SE **1/4 of Section** 28 **Township** 4S **Range** 9E

_____ **ft. from (N/S)** _____ **Line of quarter section**

_____ **ft. from (E/W)** _____ **Line of quarter section.**

Well Class	Timing of Action (pick one)	Type of Action (pick one)
☐ Class I ☐ Class II ☑ Class III ☐ Class V	☑ Notice Prior to Work Date Expected to Commence March 2021 ☐ Report After Work Date Work Ended	☐ Well Rework ☑ Plugging and Abandonment ☐ Conversion to a Non-Injection Well

Provide a narrative description of the work planned to be performed, or that was performed. Use additional pages as necessary. See instructions.

A workover rig capable of performing the required abandonment operations at the required depths will be moved in and set up over the core hole. The core hole will be inspected to determine the depth to which the hole remains open and if any obstructions are present in the core hole; the presence and condition of any existing collar will also be documented. If necessary, the core hole will be cleaned out to a depth of at least 100 feet below the bedrock-LBFU contact to enable placement of cement seals.

If collar is present, an attempt will be made to remove it. If removal of the collar is not feasible, it will be left in the hole and perforated as needed to allow an annular seal to be placed to a depth of at least 25 feet bgs. In areas of agricultural use, the surface casing will be cut at least 5 feet bgs and removed.

If the collar cannot be removed, it will be perforated from at least 20 feet below the bedrock-LBFU contact to at least 20 feet above the contact; from at least 20 feet below the base of the MFGU to at least 20 feet above the top of the MFGU; and from at least 25 feet bgs to 5 feet bgs.

A tremie pipe will be used to place Type V cement in the open core hole from the bottom of the core hole to the top of the core hole. Cement retainers, as described above, will be used to force cement grout into the annulus and behind perforated intervals, as necessary.

If the hole has been obstructed, as much cement as possible will be placed from 100 feet below the LBFU-bedrock contact to the top of the core hole.

The volume of Type V cement will be recorded and will not be less than the estimated volume of material required to fill each interval. All cement grout will consist of Type V cement, or equivalent approved in accordance with the UIC Permit.

Certification

I certify under the penalty of law that I have personally examined and am familiar with the information submitted in this document and all attachments and that, based on my inquiry of those individuals immediately responsible for obtaining the information, I believe that the information is true, accurate, and complete. I am aware that there are significant penalties for submitting false information, including the possibliity of fine and imprisonment. (Ref. 40 CFR § 144.32)

Name and Official Title *(Please type or print)*	Signature	Date Signed
Dan Johnson, VP - General Manager		10/3/2019

INSTRUCTIONS FOR FORM 7520-19

This form replaces forms 7520-12 and 7520-14. Use this form only when work is planned or has occurred that affects the well's construction or operation as an injection well, including work on the casing, tubing or packer (or for shallow Class V wells, the subsurface fluid emplacement network). Use one form per injection well. While reports or other information developed by contractors or service companies may be attached, this form must be signed by a responsible entity as described at 40 CFR 144.32. Note: operators closing Class V wells should use Form 7520-17.

NAME, ADDRESS, PHONE AND/OR EMAIL OF PERMITTEE: Enter the name and street address, city/town, state, and ZIP code of the permittee. Also provide an email address (if available) and/or a phone number.

PERMIT OR EPA ID NUMBER: Enter the well identification number or permit number assigned to the well by the EPA or the permitting authority.

API NUMBER: Enter the number assigned by the local jurisdiction (usually a State Oil and Gas Agency) using the American Petroleum Institute standard numbering system.

FULL WELL NAME: Enter the full name of the well or project.

Enter the **STATE** and **COUNTY** where the well is located. For States that do not have counties, use the name of that State's equivalent jurisdiction at a more local level.

WELL LOCATION: Fill in the complete township, range, and section to the nearest quarter-quarter section. A township is north or south of the baseline, and a range is east or west of the principal meridian (e.g., T12N, R34W). Also include the distance, in feet, from the nearest north or south line and nearest east or west line of the quarter-section. Also, enter the **latitude** and **longitude** of the well in decimal degrees, to five or six places if possible; be sure to include a negative sign for the longitude of a well in the Western Hemisphere and a negative sign for the latitude of a well in the Southern Hemisphere.

Enter the **WELL CLASS,** i.e., the class of injection well as defined in 40 CFR 144.6.

TIMING OF THE ACTION: Check ***Notice prior to work*** if the activity has not yet occurred (i.e., is planned). Check ***Report after work*** if the activity described has already occurred. As appropriate, include the date the activity is expected to start or the date the activity was completed. (Note this may not be available, e.g., for a plugging plan submitted with a permit application.)

TYPE OF ACTION: Check the appropriate box to describe the kind of activity being reported. Check ***Well Rework*** for work that was/will be performed on the well after it has already been in operation as an injection well. Check ***Plugging and Abandonment*** to report on plans for or descriptions of final closure/plugging after use as an injection well. Check ***Conversion to a Non-Injection Well*** if the well is to be converted to something other than an injection well.

Provide a **NARRATIVE DESCRIPTION** of the work planned to be performed, or that was performed. The narrative should include a description of the main procedures planned or that occurred during the work activity. A service company report, daily report, or similar document may be attached if it includes all the requested information and is clear and legible.

For well reworks, include the following information: The reason for the well rework; depths of activity; type of activity; changes to injection well configuration, well casing, or cement behind casing; any plug added to the well and its depth; any newly drilled interval and its depth; method(s) to demonstrate that the well has mechanical integrity (as applicable); and any deviations from the approved rework plan (as applicable).

For a well plugging plan, include the following information: Reason for the well plugging; number of plugs placed, and their depths; materials used as plugs (e.g., cast iron bridge plug, cement, cement retainer); method to set plugs; and wait-on-cement times, if any. Also provide one or more cost estimates from an independent firm in the business of plugging and abandoning wells to plug the well as described in the plan.

For well plugging affidavit, include the following information: Reason for the well plugging; number of plugs placed, and their depths; materials used as plugs (e.g., cast iron bridge plug, cement, cement retainer); method to set plugs; wait-on-cement times, if any; and any deviations from the approved plugging plan (if applicable).

For conversion to a non-injection well, include the following information: Depths of activity; type of activity; changes to injection well configuration, well casing, or cement behind casing; any plug added to the well and its depth; any newly drilled interval and its depth; depths of new perforations; and method(s) to demonstrate that the well has mechanical integrity (as applicable).

For all of the above activities, include a well sketch depicting the work, results of well tests/logging performed, service company tickets, and any other available information demonstrating how the work was/is to be performed. Also, specify whether depths are below ground surface, relative to Kelly bushing, etc.

CERTIFICATION: This form must be signed and dated by either: a responsible corporate officer for a corporation, by a general partner for a partnership, by the proprietor of a sole proprietorship, or by a principal executive or ranking elected official for a public agency.

PAPERWORK REDUCTION ACT NOTICE: The public reporting and recordkeeping burden for this collection of information is estimated to average between 6.0 and 7.9 hours per response, depending on the injection well class. Burden means the total time, effort, or financial resource expended by persons to generate, maintain, retain, or disclose or provide information to or for a Federal Agency. This includes the time needed to review instructions; develop, acquire, install, and utilize technology and systems for the purposes of collecting, validating, and verifying information, processing and maintaining information, and disclosing and providing information; adjust the existing ways to comply with any previously applicable instructions and requirements; train personnel to be able to respond to the collection of information; search data sources; complete and review the collection of information; and, transmit or otherwise disclose the information. An agency may not conduct or sponsor, and a person is not required to respond to, a collection of information unless it displays a currently valid OMB control number. Send comments on the Agency's need for this information, the accuracy of the provided burden estimates, and any suggested methods for minimizing respondent burden, including the use of automated collection techniques to Director, Collection Strategies Division, U.S. Environmental Protection Agency (2822), 1200 Pennsylvania Ave., NW., Washington, D.C. 20460. Include the OMB control number in any correspondence. Do not send the completed forms to this address.

AS-BUILT COREHOLE 409MF

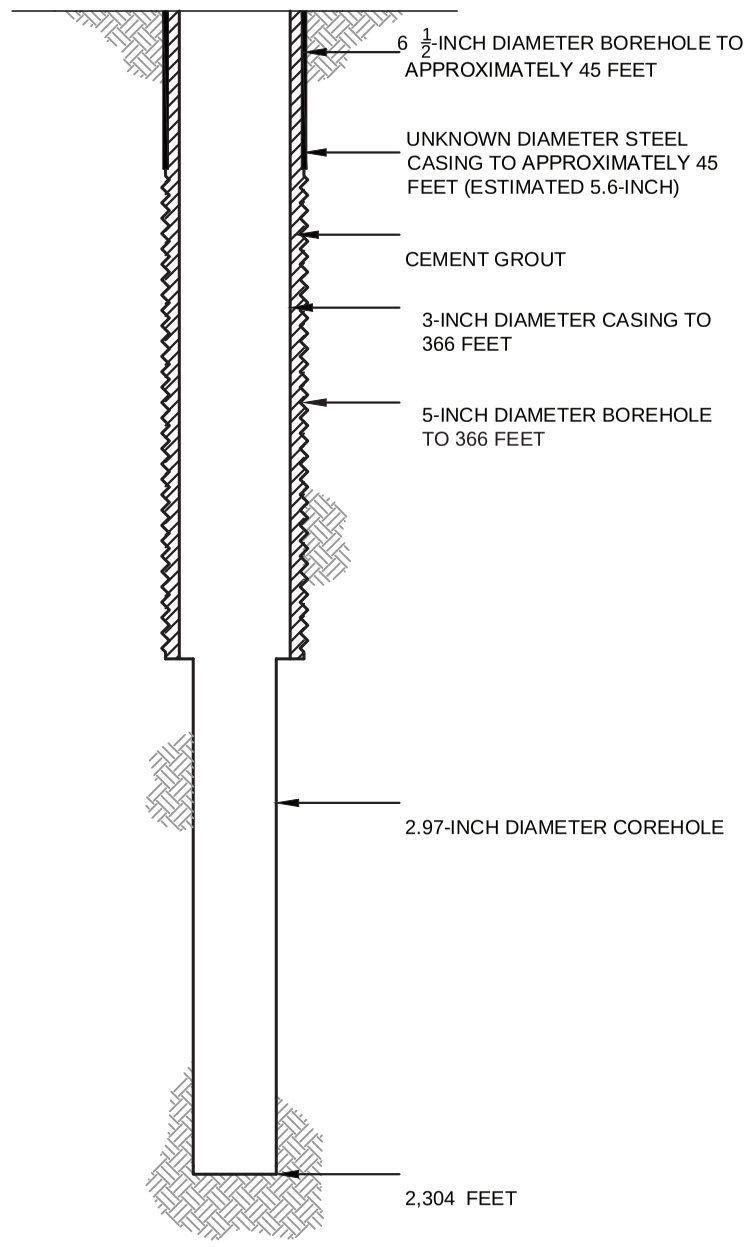

PROPOSED PLUGGING AND ABANDONMENT COREHOLE 409MF

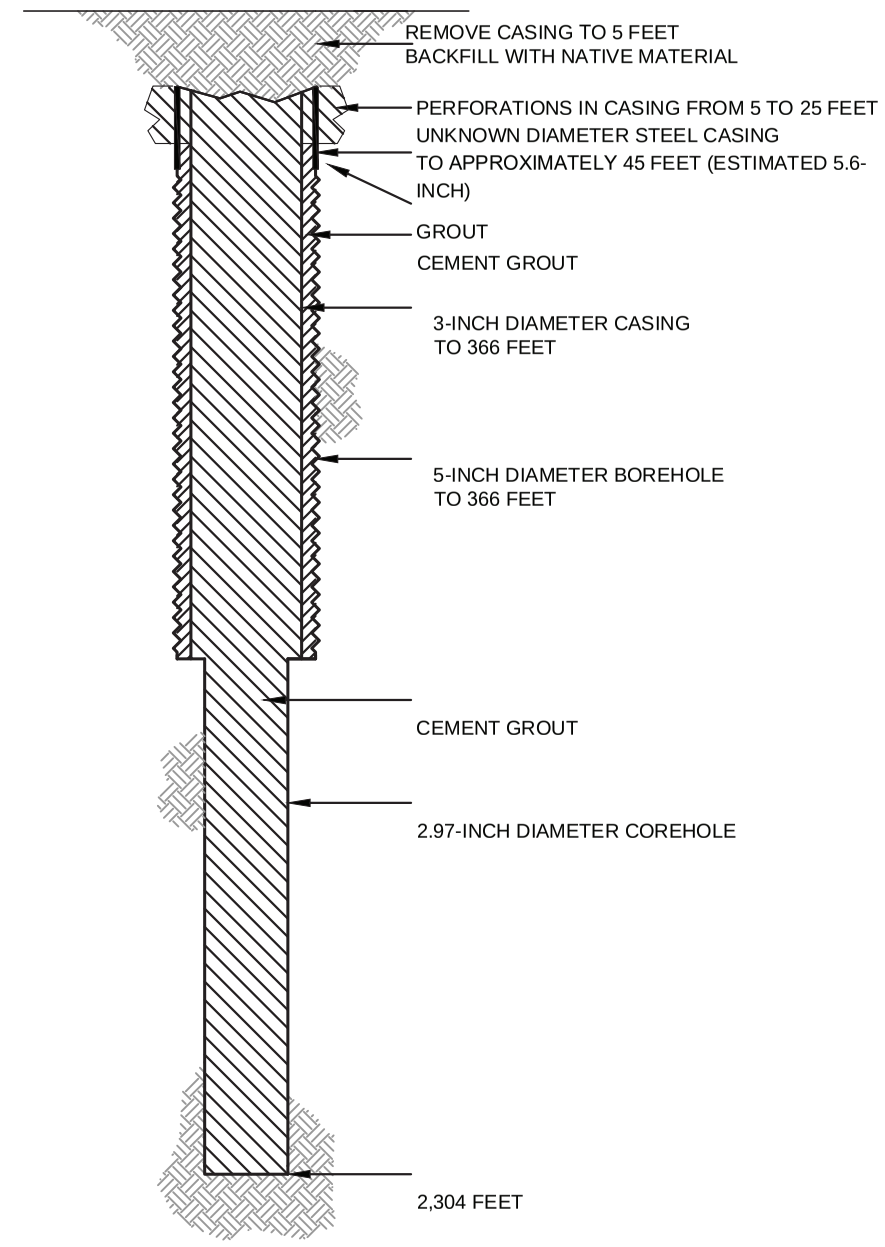

HALEY ALDRICH

FLORENCE COPPER, INC.
FLORENCE, ARIZONA

COREHOLE 409MF DIAGRAM

FLORENCE COPPER INC.

NOT TO SCALE
SEPTEMBER 2019

FIGURE 1

MOBINI, GITA Printed: 4/21/2017 12:00 PM Layout: ABANDON (2)
G:\PROJECTS\CURIS RESOURCES\38706-CURIS FEASIBILITY\DRAWINGS\EPA\WELL ABANDON\415S_ABANDON.DWG

OMB No. 2040-0042 Approval Expires 4/30/2022

United States Environmental Protection Agency

WELL REWORK RECORD, PLUGGING AND ABANDONMENT PLAN, OR PLUGGING AND ABANDONMENT AFFIDAVIT

Name and Address, Phone Number and/or Email of Permittee

Florence Copper Project
1575 W Hunt Hwy,
Florence, AZ 85132

Permit or EPA ID Number	API Number	Full Well Name
R9UIC-AZ3-FY11-1		410MF

State	County
Arizona	Pinal

Locate well in two directions from nearest lines of quarter section and drilling unit

Latitude 33.04796082

Longitude -111.4285349

Surface Location

SW **1/4 of** SE **1/4 of Section** 28 **Township** 4S **Range** 9E

_____ **ft. from (N/S)** _____ **Line of quarter section**

_____ **ft. from (E/W)** _____ **Line of quarter section.**

Well Class	Timing of Action (pick one)	Type of Action (pick one)
☐ Class I ☐ Class II ☑ Class III ☐ Class V	☑ Notice Prior to Work Date Expected to Commence March 2021 ☐ Report After Work Date Work Ended	☐ Well Rework ☑ Plugging and Abandonment ☐ Conversion to a Non-Injection Well

Provide a narrative description of the work planned to be performed, or that was performed. Use additional pages as necessary. See instructions.

A workover rig capable of performing the required abandonment operations at the required depths will be moved in and set up over the core hole. The core hole will be inspected to determine the depth to which the hole remains open and if any obstructions are present in the core hole; the presence and condition of any existing collar will also be documented. If necessary, the core hole will be cleaned out to a depth of at least 100 feet below the bedrock-LBFU contact to enable placement of cement seals.

If collar is present, an attempt will be made to remove it. If removal of the collar is not feasible, it will be left in the hole and perforated as needed to allow an annular seal to be placed to a depth of at least 25 feet bgs. In areas of agricultural use, the surface casing will be cut at least 5 feet bgs and removed.

If the collar cannot be removed, it will be perforated from at least 20 feet below the bedrock-LBFU contact to at least 20 feet above the contact; from at least 20 feet below the base of the MFGU to at least 20 feet above the top of the MFGU; and from at least 25 feet bgs to 5 feet bgs.

A tremie pipe will be used to place Type V cement in the open core hole from the bottom of the core hole to the top of the core hole. Cement retainers, as described above, will be used to force cement grout into the annulus and behind perforated intervals, as necessary.

If the hole has been obstructed, as much cement as possible will be placed from 100 feet below the LBFU-bedrock contact to the top of the core hole.

The volume of Type V cement will be recorded and will not be less than the estimated volume of material required to fill each interval. All cement grout will consist of Type V cement, or equivalent approved in accordance with the UIC Permit.

Certification

I certify under the penalty of law that I have personally examined and am familiar with the information submitted in this document and all attachments and that, based on my inquiry of those individuals immediately responsible for obtaining the information, I believe that the information is true, accurate, and complete. I am aware that there are significant penalties for submitting false information, including the possibliity of fine and imprisonment. (Ref. 40 CFR § 144.32)

Name and Official Title *(Please type or print)*	Signature	Date Signed
Dan Johnson, VP - General Manager		10/3/2019

INSTRUCTIONS FOR FORM 7520-19

This form replaces forms 7520-12 and 7520-14. Use this form only when work is planned or has occurred that affects the well's construction or operation as an injection well, including work on the casing, tubing or packer (or for shallow Class V wells, the subsurface fluid emplacement network). Use one form per injection well. While reports or other information developed by contractors or service companies may be attached, this form must be signed by a responsible entity as described at 40 CFR 144.32. Note: operators closing Class V wells should use Form 7520-17.

NAME, ADDRESS, PHONE AND/OR EMAIL OF PERMITTEE: Enter the name and street address, city/town, state, and ZIP code of the permittee. Also provide an email address (if available) and/or a phone number.

PERMIT OR EPA ID NUMBER: Enter the well identification number or permit number assigned to the well by the EPA or the permitting authority.

API NUMBER: Enter the number assigned by the local jurisdiction (usually a State Oil and Gas Agency) using the American Petroleum Institute standard numbering system.

FULL WELL NAME: Enter the full name of the well or project.

Enter the **STATE** and **COUNTY** where the well is located. For States that do not have counties, use the name of that State's equivalent jurisdiction at a more local level.

WELL LOCATION: Fill in the complete township, range, and section to the nearest quarter-quarter section. A township is north or south of the baseline, and a range is east or west of the principal meridian (e.g., T12N, R34W). Also include the distance, in feet, from the nearest north or south line and nearest east or west line of the quarter-section. Also, enter the **latitude** and **longitude** of the well in decimal degrees, to five or six places if possible; be sure to include a negative sign for the longitude of a well in the Western Hemisphere and a negative sign for the latitude of a well in the Southern Hemisphere.

Enter the **WELL CLASS,** i.e., the class of injection well as defined in 40 CFR 144.6.

TIMING OF THE ACTION: Check ***Notice prior to work*** if the activity has not yet occurred (i.e., is planned). Check ***Report after work*** if the activity described has already occurred. As appropriate, include the date the activity is expected to start or the date the activity was completed. (Note this may not be available, e.g., for a plugging plan submitted with a permit application.)

TYPE OF ACTION: Check the appropriate box to describe the kind of activity being reported. Check ***Well Rework*** for work that was/will be performed on the well after it has already been in operation as an injection well. Check ***Plugging and Abandonment*** to report on plans for or descriptions of final closure/plugging after use as an injection well. Check ***Conversion to a Non-Injection Well*** if the well is to be converted to something other than an injection well.

Provide a **NARRATIVE DESCRIPTION** of the work planned to be performed, or that was performed. The narrative should include a description of the main procedures planned or that occurred during the work activity. A service company report, daily report, or similar document may be attached if it includes all the requested information and is clear and legible.

For well reworks, include the following information: The reason for the well rework; depths of activity; type of activity; changes to injection well configuration, well casing, or cement behind casing; any plug added to the well and its depth; any newly drilled interval and its depth; method(s) to demonstrate that the well has mechanical integrity (as applicable); and any deviations from the approved rework plan (as applicable).

For a well plugging plan, include the following information: Reason for the well plugging; number of plugs placed, and their depths; materials used as plugs (e.g., cast iron bridge plug, cement, cement retainer); method to set plugs; and wait-on-cement times, if any. Also provide one or more cost estimates from an independent firm in the business of plugging and abandoning wells to plug the well as described in the plan.

For well plugging affidavit, include the following information: Reason for the well plugging; number of plugs placed, and their depths; materials used as plugs (e.g., cast iron bridge plug, cement, cement retainer); method to set plugs; wait-on-cement times, if any; and any deviations from the approved plugging plan (if applicable).

For conversion to a non-injection well, include the following information: Depths of activity; type of activity; changes to injection well configuration, well casing, or cement behind casing; any plug added to the well and its depth; any newly drilled interval and its depth; depths of new perforations; and method(s) to demonstrate that the well has mechanical integrity (as applicable).

For all of the above activities, include a well sketch depicting the work, results of well tests/logging performed, service company tickets, and any other available information demonstrating how the work was/is to be performed. Also, specify whether depths are below ground surface, relative to Kelly bushing, etc.

CERTIFICATION: This form must be signed and dated by either: a responsible corporate officer for a corporation, by a general partner for a partnership, by the proprietor of a sole proprietorship, or by a principal executive or ranking elected official for a public agency.

PAPERWORK REDUCTION ACT NOTICE: The public reporting and recordkeeping burden for this collection of information is estimated to average between 6.0 and 7.9 hours per response, depending on the injection well class. Burden means the total time, effort, or financial resource expended by persons to generate, maintain, retain, or disclose or provide information to or for a Federal Agency. This includes the time needed to review instructions; develop, acquire, install, and utilize technology and systems for the purposes of collecting, validating, and verifying information, processing and maintaining information, and disclosing and providing information; adjust the existing ways to comply with any previously applicable instructions and requirements; train personnel to be able to respond to the collection of information; search data sources; complete and review the collection of information; and, transmit or otherwise disclose the information. An agency may not conduct or sponsor, and a person is not required to respond to, a collection of information unless it displays a currently valid OMB control number. Send comments on the Agency's need for this information, the accuracy of the provided burden estimates, and any suggested methods for minimizing respondent burden, including the use of automated collection techniques to Director, Collection Strategies Division, U.S. Environmental Protection Agency (2822), 1200 Pennsylvania Ave., NW., Washington, D.C. 20460. Include the OMB control number in any correspondence. Do not send the completed forms to this address.

AS-BUILT COREHOLE 410MF

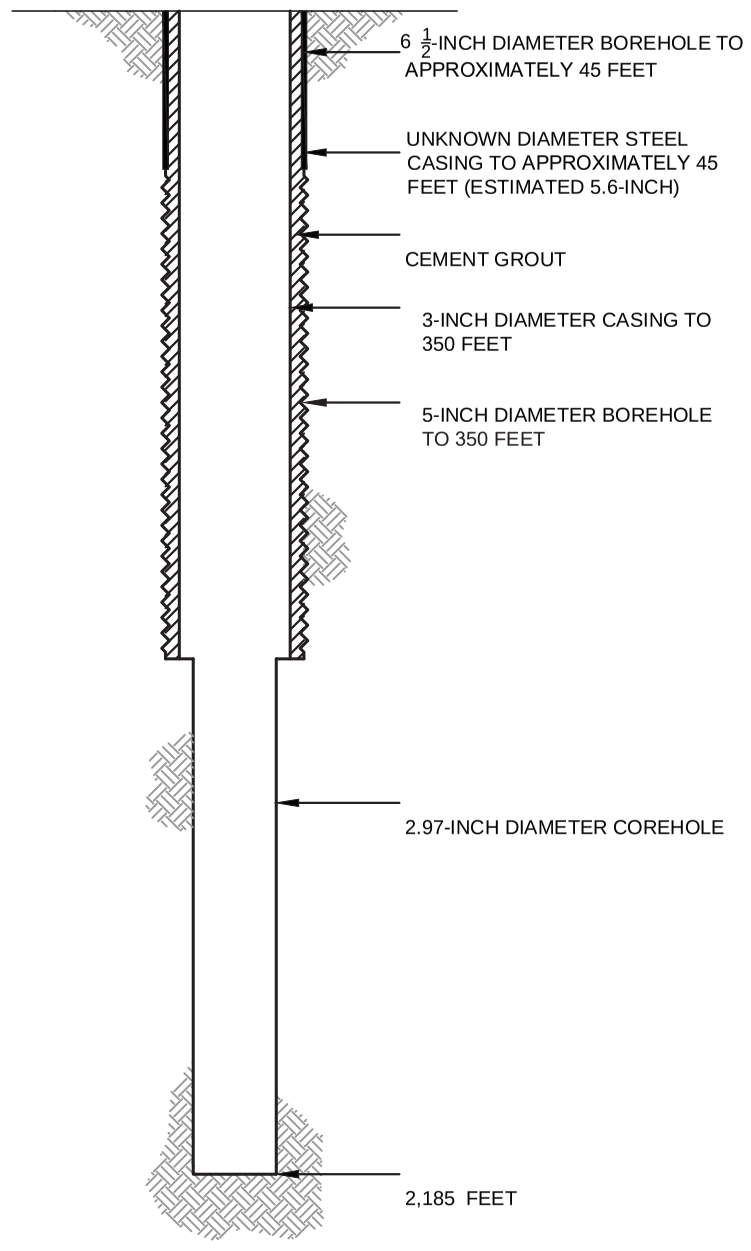

PROPOSED PLUGGING AND ABANDONMENT COREHOLE 410MF

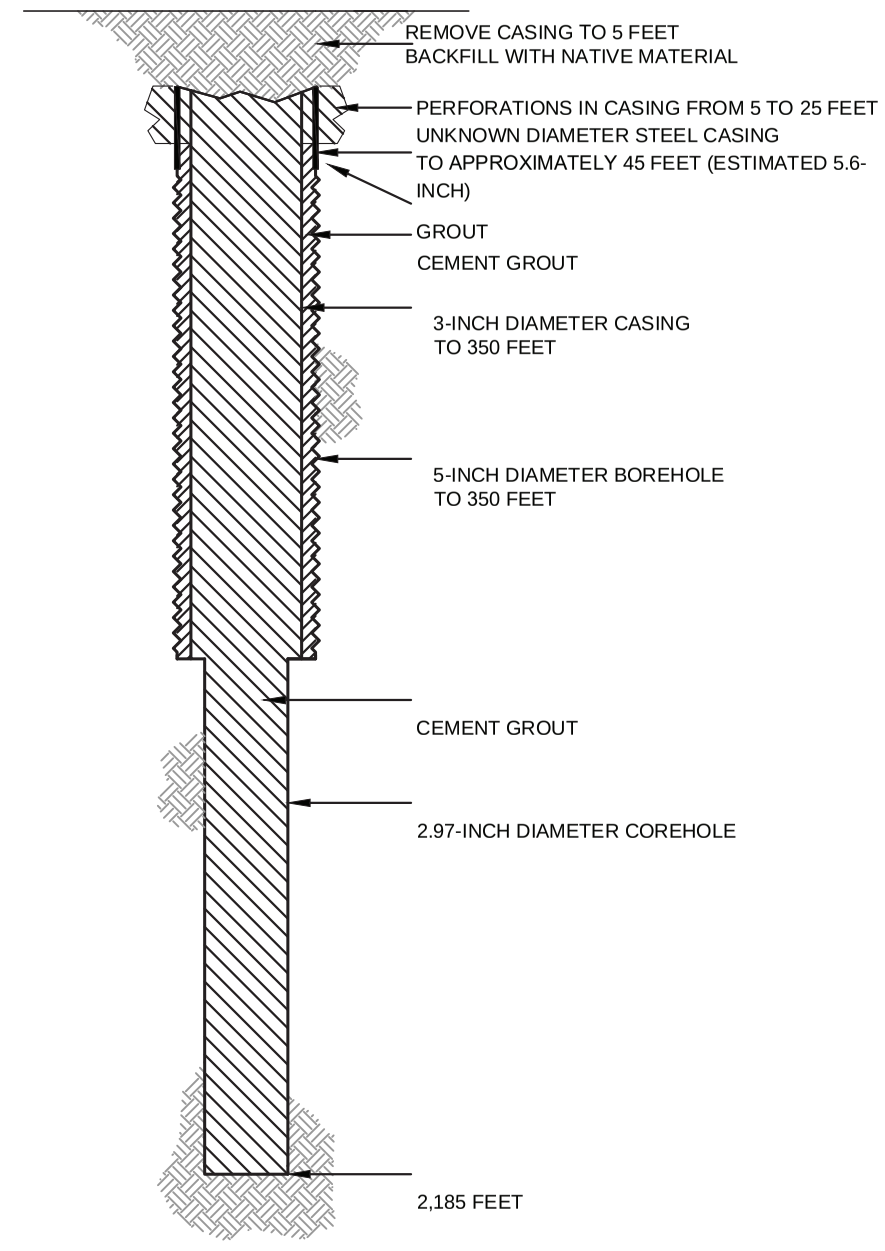

HALEY ALDRICH

FLORENCE COPPER, INC.
FLORENCE, ARIZONA

COREHOLE 410MF DIAGRAM

FLORENCE COPPER INC.

NOT TO SCALE
SEPTEMBER 2019

FIGURE 1

MOBINI, GITA Printed: 4/21/2017 12:00 PM Layout: ABANDON (2)
G:\PROJECTS\CURIS RESOURCES\38706-CURIS FEASIBILITY\DRAWINGS\EPA\WELL ABANDON\415S_ABANDON.DWG

OMB No. 2040-0042 Approval Expires 4/30/2022

United States Environmental Protection Agency

EPA

WELL REWORK RECORD, PLUGGING AND ABANDONMENT PLAN, OR PLUGGING AND ABANDONMENT AFFIDAVIT

Name and Address, Phone Number and/or Email of Permittee

Florence Copper Project
1575 W Hunt Hwy,
Florence, AZ 85132

Permit or EPA ID Number	API Number	Full Well Name
R9UIC-AZ3-FY11-1		411MF

State	County
Arizona	Pinal

Locate well in two directions from nearest lines of quarter section and drilling unit

Latitude 33.04795763

Longitude -111.427719

Surface Location

SW **1/4 of** SE **1/4 of Section** 28 **Township** 4S **Range** 9E

_____ **ft. from (N/S)** _____ **Line of quarter section**

_____ **ft. from (E/W)** _____ **Line of quarter section.**

Well Class	Timing of Action (pick one)	Type of Action (pick one)
☐ Class I ☐ Class II ☑ Class III ☐ Class V	☑ Notice Prior to Work Date Expected to Commence March 2021 ☐ Report After Work Date Work Ended	☐ Well Rework ☑ Plugging and Abandonment ☐ Conversion to a Non-Injection Well

Provide a narrative description of the work planned to be performed, or that was performed. Use additional pages as necessary. See instructions.

A workover rig capable of performing the required abandonment operations at the required depths will be moved in and set up over the core hole. The core hole will be inspected to determine the depth to which the hole remains open and if any obstructions are present in the core hole; the presence and condition of any existing collar will also be documented. If necessary, the core hole will be cleaned out to a depth of at least 100 feet below the bedrock-LBFU contact to enable placement of cement seals.

If collar is present, an attempt will be made to remove it. If removal of the collar is not feasible, it will be left in the hole and perforated as needed to allow an annular seal to be placed to a depth of at least 25 feet bgs. In areas of agricultural use, the surface casing will be cut at least 5 feet bgs and removed.

If the collar cannot be removed, it will be perforated from at least 20 feet below the bedrock-LBFU contact to at least 20 feet above the contact; from at least 20 feet below the base of the MFGU to at least 20 feet above the top of the MFGU; and from at least 25 feet bgs to 5 feet bgs.

A tremie pipe will be used to place Type V cement in the open core hole from the bottom of the core hole to the top of the core hole. Cement retainers, as described above, will be used to force cement grout into the annulus and behind perforated intervals, as necessary.

If the hole has been obstructed, as much cement as possible will be placed from 100 feet below the LBFU-bedrock contact to the top of the core hole.

The volume of Type V cement will be recorded and will not be less than the estimated volume of material required to fill each interval. All cement grout will consist of Type V cement, or equivalent approved in accordance with the UIC Permit.

Certification

I certify under the penalty of law that I have personally examined and am familiar with the information submitted in this document and all attachments and that, based on my inquiry of those individuals immediately responsible for obtaining the information, I believe that the information is true, accurate, and complete. I am aware that there are significant penalties for submitting false information, including the possibliity of fine and imprisonment. (Ref. 40 CFR § 144.32)

Name and Official Title *(Please type or print)*	Signature	Date Signed
Dan Johnson, VP - General Manager		10/3/2019

INSTRUCTIONS FOR FORM 7520-19

This form replaces forms 7520-12 and 7520-14. Use this form only when work is planned or has occurred that affects the well's construction or operation as an injection well, including work on the casing, tubing or packer (or for shallow Class V wells, the subsurface fluid emplacement network). Use one form per injection well. While reports or other information developed by contractors or service companies may be attached, this form must be signed by a responsible entity as described at 40 CFR 144.32. Note: operators closing Class V wells should use Form 7520-17.

NAME, ADDRESS, PHONE AND/OR EMAIL OF PERMITTEE: Enter the name and street address, city/town, state, and ZIP code of the permittee. Also provide an email address (if available) and/or a phone number.

PERMIT OR EPA ID NUMBER: Enter the well identification number or permit number assigned to the well by the EPA or the permitting authority.

API NUMBER: Enter the number assigned by the local jurisdiction (usually a State Oil and Gas Agency) using the American Petroleum Institute standard numbering system.

FULL WELL NAME: Enter the full name of the well or project.

Enter the **STATE** and **COUNTY** where the well is located. For States that do not have counties, use the name of that State's equivalent jurisdiction at a more local level.

WELL LOCATION: Fill in the complete township, range, and section to the nearest quarter-quarter section. A township is north or south of the baseline, and a range is east or west of the principal meridian (e.g., T12N, R34W). Also include the distance, in feet, from the nearest north or south line and nearest east or west line of the quarter-section. Also, enter the **latitude** and **longitude** of the well in decimal degrees, to five or six places if possible; be sure to include a negative sign for the longitude of a well in the Western Hemisphere and a negative sign for the latitude of a well in the Southern Hemisphere.

Enter the **WELL CLASS,** i.e., the class of injection well as defined in 40 CFR 144.6.

TIMING OF THE ACTION: Check ***Notice prior to work*** if the activity has not yet occurred (i.e., is planned). Check ***Report after work*** if the activity described has already occurred. As appropriate, include the date the activity is expected to start or the date the activity was completed. (Note this may not be available, e.g., for a plugging plan submitted with a permit application.)

TYPE OF ACTION: Check the appropriate box to describe the kind of activity being reported. Check ***Well Rework*** for work that was/will be performed on the well after it has already been in operation as an injection well. Check ***Plugging and Abandonment*** to report on plans for or descriptions of final closure/plugging after use as an injection well. Check ***Conversion to a Non-Injection Well*** if the well is to be converted to something other than an injection well.

Provide a **NARRATIVE DESCRIPTION** of the work planned to be performed, or that was performed. The narrative should include a description of the main procedures planned or that occurred during the work activity. A service company report, daily report, or similar document may be attached if it includes all the requested information and is clear and legible.

For well reworks, include the following information: The reason for the well rework; depths of activity; type of activity; changes to injection well configuration, well casing, or cement behind casing; any plug added to the well and its depth; any newly drilled interval and its depth; method(s) to demonstrate that the well has mechanical integrity (as applicable); and any deviations from the approved rework plan (as applicable).

For a well plugging plan, include the following information: Reason for the well plugging; number of plugs placed, and their depths; materials used as plugs (e.g., cast iron bridge plug, cement, cement retainer); method to set plugs; and wait-on-cement times, if any. Also provide one or more cost estimates from an independent firm in the business of plugging and abandoning wells to plug the well as described in the plan.

For well plugging affidavit, include the following information: Reason for the well plugging; number of plugs placed, and their depths; materials used as plugs (e.g., cast iron bridge plug, cement, cement retainer); method to set plugs; wait-on-cement times, if any; and any deviations from the approved plugging plan (if applicable).

For conversion to a non-injection well, include the following information: Depths of activity; type of activity; changes to injection well configuration, well casing, or cement behind casing; any plug added to the well and its depth; any newly drilled interval and its depth; depths of new perforations; and method(s) to demonstrate that the well has mechanical integrity (as applicable).

For all of the above activities, include a well sketch depicting the work, results of well tests/logging performed, service company tickets, and any other available information demonstrating how the work was/is to be performed. Also, specify whether depths are below ground surface, relative to Kelly bushing, etc.

CERTIFICATION: This form must be signed and dated by either: a responsible corporate officer for a corporation, by a general partner for a partnership, by the proprietor of a sole proprietorship, or by a principal executive or ranking elected official for a public agency.

PAPERWORK REDUCTION ACT NOTICE: The public reporting and recordkeeping burden for this collection of information is estimated to average between 6.0 and 7.9 hours per response, depending on the injection well class. Burden means the total time, effort, or financial resource expended by persons to generate, maintain, retain, or disclose or provide information to or for a Federal Agency. This includes the time needed to review instructions; develop, acquire, install, and utilize technology and systems for the purposes of collecting, validating, and verifying information, processing and maintaining information, and disclosing and providing information; adjust the existing ways to comply with any previously applicable instructions and requirements; train personnel to be able to respond to the collection of information; search data sources; complete and review the collection of information; and, transmit or otherwise disclose the information. An agency may not conduct or sponsor, and a person is not required to respond to, a collection of information unless it displays a currently valid OMB control number. Send comments on the Agency's need for this information, the accuracy of the provided burden estimates, and any suggested methods for minimizing respondent burden, including the use of automated collection techniques to Director, Collection Strategies Division, U.S. Environmental Protection Agency (2822), 1200 Pennsylvania Ave., NW., Washington, D.C. 20460. Include the OMB control number in any correspondence. Do not send the completed forms to this address.

AS-BUILT COREHOLE 411MF

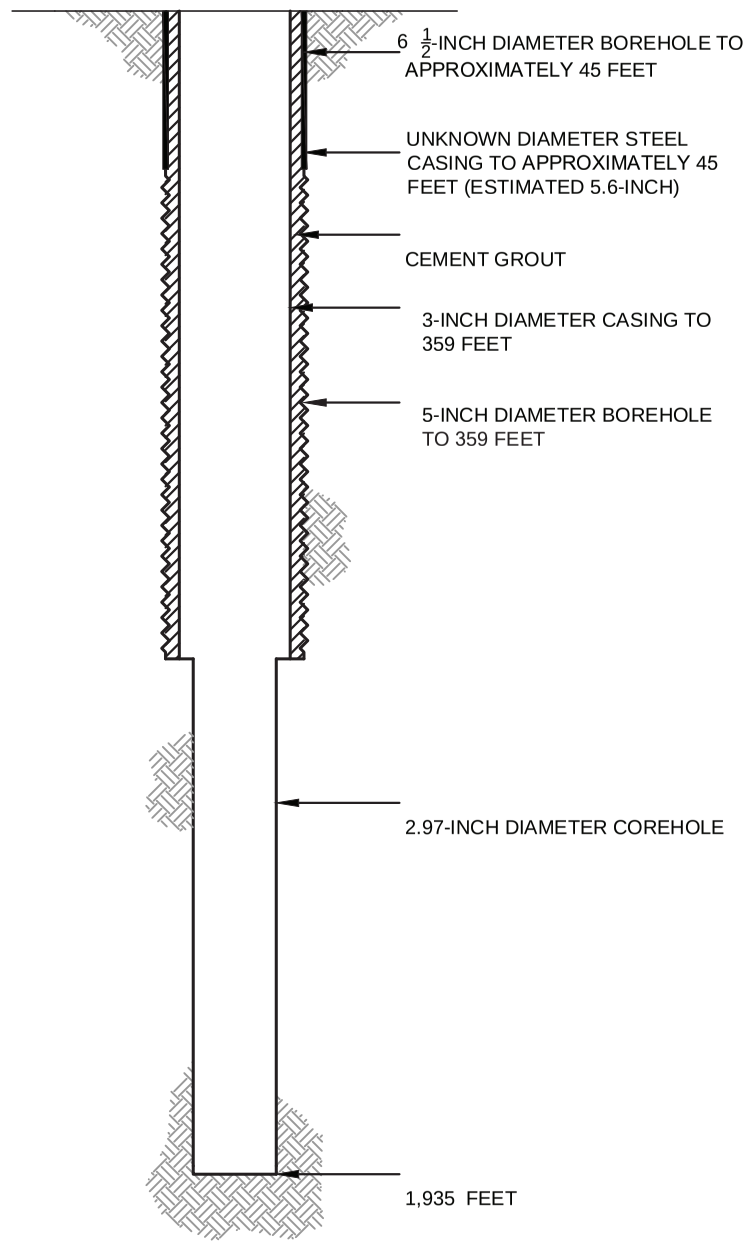

PROPOSED PLUGGING AND ABANDONMENT COREHOLE 411MF

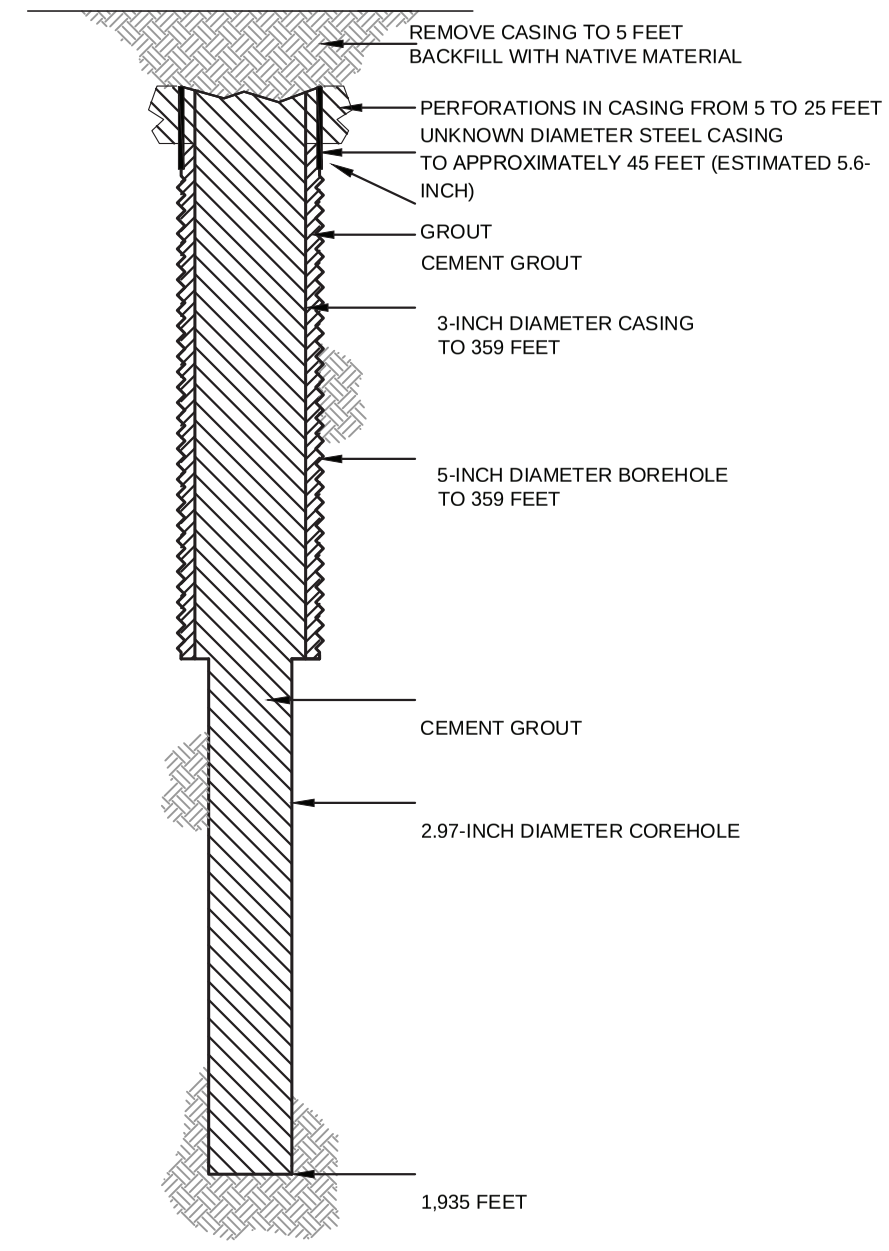

HALEY ALDRICH

FLORENCE COPPER, INC.
FLORENCE, ARIZONA

COREHOLE 411MF DIAGRAM

FLORENCE COPPER INC.

NOT TO SCALE
SEPTEMBER 2019

FIGURE 1

MOBINI, GITA Printed: 4/21/2017 12:00 PM Layout: ABANDON (2)
G:\PROJECTS\CURIS RESOURCES\38706-CURIS FEASIBILITY\DRAWINGS\EPA\WELL ABANDON\415S_ABANDON.DWG

OMB No. 2040-0042 Approval Expires 4/30/2022

United States Environmental Protection Agency

WELL REWORK RECORD, PLUGGING AND ABANDONMENT PLAN, OR PLUGGING AND ABANDONMENT AFFIDAVIT

Name and Address, Phone Number and/or Email of Permittee

Florence Copper Project
1575 W Hunt Hwy,
Florence, AZ 85132

Permit or EPA ID Number	API Number	Full Well Name
R9UIC-AZ3-FY11-1		412MF

State	County
Arizona	Pinal

Locate well in two directions from nearest lines of quarter section and drilling unit

Latitude 33.04736416

Longitude -111.4281302

Surface Location

SW **1/4 of** SE **1/4 of Section** 28 **Township** 4S **Range** 9E

_____ **ft. from (N/S)** _____ **Line of quarter section**

_____ **ft. from (E/W)** _____ **Line of quarter section.**

Well Class	Timing of Action (pick one)	Type of Action (pick one)
☐ Class I ☐ Class II ☑ Class III ☐ Class V	☑ Notice Prior to Work Date Expected to Commence March 2021 ☐ Report After Work Date Work Ended	☐ Well Rework ☑ Plugging and Abandonment ☐ Conversion to a Non-Injection Well

Provide a narrative description of the work planned to be performed, or that was performed. Use additional pages as necessary. See instructions.

A workover rig capable of performing the required abandonment operations at the required depths will be moved in and set up over the core hole. The core hole will be inspected to determine the depth to which the hole remains open and if any obstructions are present in the core hole; the presence and condition of any existing collar will also be documented. If necessary, the core hole will be cleaned out to a depth of at least 100 feet below the bedrock-LBFU contact to enable placement of cement seals.

If collar is present, an attempt will be made to remove it. If removal of the collar is not feasible, it will be left in the hole and perforated as needed to allow an annular seal to be placed to a depth of at least 25 feet bgs. In areas of agricultural use, the surface casing will be cut at least 5 feet bgs and removed.

If the collar cannot be removed, it will be perforated from at least 20 feet below the bedrock-LBFU contact to at least 20 feet above the contact; from at least 20 feet below the base of the MFGU to at least 20 feet above the top of the MFGU; and from at least 25 feet bgs to 5 feet bgs.

A tremie pipe will be used to place Type V cement in the open core hole from the bottom of the core hole to the top of the core hole. Cement retainers, as described above, will be used to force cement grout into the annulus and behind perforated intervals, as necessary.

If the hole has been obstructed, as much cement as possible will be placed from 100 feet below the LBFU-bedrock contact to the top of the core hole.

The volume of Type V cement will be recorded and will not be less than the estimated volume of material required to fill each interval. All cement grout will consist of Type V cement, or equivalent approved in accordance with the UIC Permit.

Certification

I certify under the penalty of law that I have personally examined and am familiar with the information submitted in this document and all attachments and that, based on my inquiry of those individuals immediately responsible for obtaining the information, I believe that the information is true, accurate, and complete. I am aware that there are significant penalties for submitting false information, including the possibliity of fine and imprisonment. (Ref. 40 CFR § 144.32)

Name and Official Title *(Please type or print)*	Signature	Date Signed
Dan Johnson, VP - General Manager		10/3/2019

INSTRUCTIONS FOR FORM 7520-19

This form replaces forms 7520-12 and 7520-14. Use this form only when work is planned or has occurred that affects the well's construction or operation as an injection well, including work on the casing, tubing or packer (or for shallow Class V wells, the subsurface fluid emplacement network). Use one form per injection well. While reports or other information developed by contractors or service companies may be attached, this form must be signed by a responsible entity as described at 40 CFR 144.32. Note: operators closing Class V wells should use Form 7520-17.

NAME, ADDRESS, PHONE AND/OR EMAIL OF PERMITTEE: Enter the name and street address, city/town, state, and ZIP code of the permittee. Also provide an email address (if available) and/or a phone number.

PERMIT OR EPA ID NUMBER: Enter the well identification number or permit number assigned to the well by the EPA or the permitting authority.

API NUMBER: Enter the number assigned by the local jurisdiction (usually a State Oil and Gas Agency) using the American Petroleum Institute standard numbering system.

FULL WELL NAME: Enter the full name of the well or project.

Enter the **STATE** and **COUNTY** where the well is located. For States that do not have counties, use the name of that State's equivalent jurisdiction at a more local level.

WELL LOCATION: Fill in the complete township, range, and section to the nearest quarter-quarter section. A township is north or south of the baseline, and a range is east or west of the principal meridian (e.g., T12N, R34W). Also include the distance, in feet, from the nearest north or south line and nearest east or west line of the quarter-section. Also, enter the **latitude** and **longitude** of the well in decimal degrees, to five or six places if possible; be sure to include a negative sign for the longitude of a well in the Western Hemisphere and a negative sign for the latitude of a well in the Southern Hemisphere.

Enter the **WELL CLASS,** i.e., the class of injection well as defined in 40 CFR 144.6.

TIMING OF THE ACTION: Check ***Notice prior to work*** if the activity has not yet occurred (i.e., is planned). Check ***Report after work*** if the activity described has already occurred. As appropriate, include the date the activity is expected to start or the date the activity was completed. (Note this may not be available, e.g., for a plugging plan submitted with a permit application.)

TYPE OF ACTION: Check the appropriate box to describe the kind of activity being reported. Check ***Well Rework*** for work that was/will be performed on the well after it has already been in operation as an injection well. Check ***Plugging and Abandonment*** to report on plans for or descriptions of final closure/plugging after use as an injection well. Check ***Conversion to a Non-Injection Well*** if the well is to be converted to something other than an injection well.

Provide a **NARRATIVE DESCRIPTION** of the work planned to be performed, or that was performed. The narrative should include a description of the main procedures planned or that occurred during the work activity. A service company report, daily report, or similar document may be attached if it includes all the requested information and is clear and legible.

For well reworks, include the following information: The reason for the well rework; depths of activity; type of activity; changes to injection well configuration, well casing, or cement behind casing; any plug added to the well and its depth; any newly drilled interval and its depth; method(s) to demonstrate that the well has mechanical integrity (as applicable); and any deviations from the approved rework plan (as applicable).

For a well plugging plan, include the following information: Reason for the well plugging; number of plugs placed, and their depths; materials used as plugs (e.g., cast iron bridge plug, cement, cement retainer); method to set plugs; and wait-on-cement times, if any. Also provide one or more cost estimates from an independent firm in the business of plugging and abandoning wells to plug the well as described in the plan.

For well plugging affidavit, include the following information: Reason for the well plugging; number of plugs placed, and their depths; materials used as plugs (e.g., cast iron bridge plug, cement, cement retainer); method to set plugs; wait-on-cement times, if any; and any deviations from the approved plugging plan (if applicable).

For conversion to a non-injection well, include the following information: Depths of activity; type of activity; changes to injection well configuration, well casing, or cement behind casing; any plug added to the well and its depth; any newly drilled interval and its depth; depths of new perforations; and method(s) to demonstrate that the well has mechanical integrity (as applicable).

For all of the above activities, include a well sketch depicting the work, results of well tests/logging performed, service company tickets, and any other available information demonstrating how the work was/is to be performed. Also, specify whether depths are below ground surface, relative to Kelly bushing, etc.

CERTIFICATION: This form must be signed and dated by either: a responsible corporate officer for a corporation, by a general partner for a partnership, by the proprietor of a sole proprietorship, or by a principal executive or ranking elected official for a public agency.

PAPERWORK REDUCTION ACT NOTICE: The public reporting and recordkeeping burden for this collection of information is estimated to average between 6.0 and 7.9 hours per response, depending on the injection well class. Burden means the total time, effort, or financial resource expended by persons to generate, maintain, retain, or disclose or provide information to or for a Federal Agency. This includes the time needed to review instructions; develop, acquire, install, and utilize technology and systems for the purposes of collecting, validating, and verifying information, processing and maintaining information, and disclosing and providing information; adjust the existing ways to comply with any previously applicable instructions and requirements; train personnel to be able to respond to the collection of information; search data sources; complete and review the collection of information; and, transmit or otherwise disclose the information. An agency may not conduct or sponsor, and a person is not required to respond to, a collection of information unless it displays a currently valid OMB control number. Send comments on the Agency's need for this information, the accuracy of the provided burden estimates, and any suggested methods for minimizing respondent burden, including the use of automated collection techniques to Director, Collection Strategies Division, U.S. Environmental Protection Agency (2822), 1200 Pennsylvania Ave., NW., Washington, D.C. 20460. Include the OMB control number in any correspondence. Do not send the completed forms to this address.

AS-BUILT COREHOLE 412MF

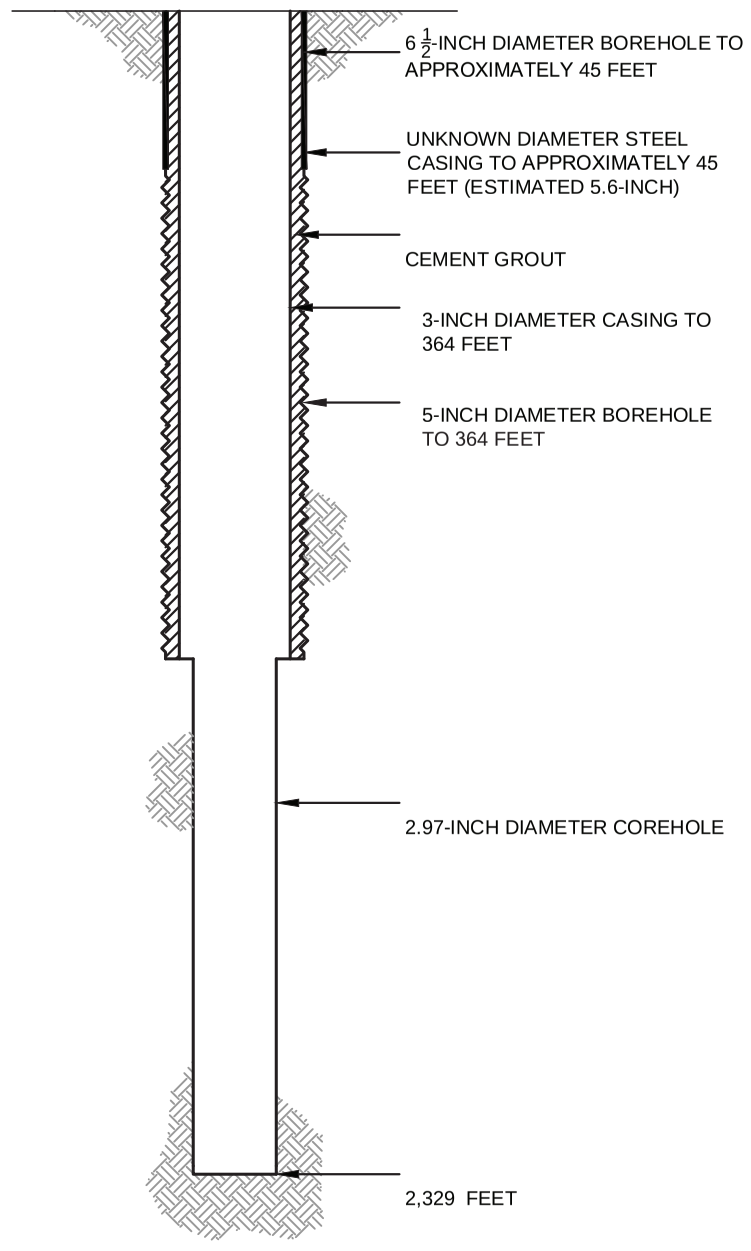

PROPOSED PLUGGING AND ABANDONMENT COREHOLE 412MF

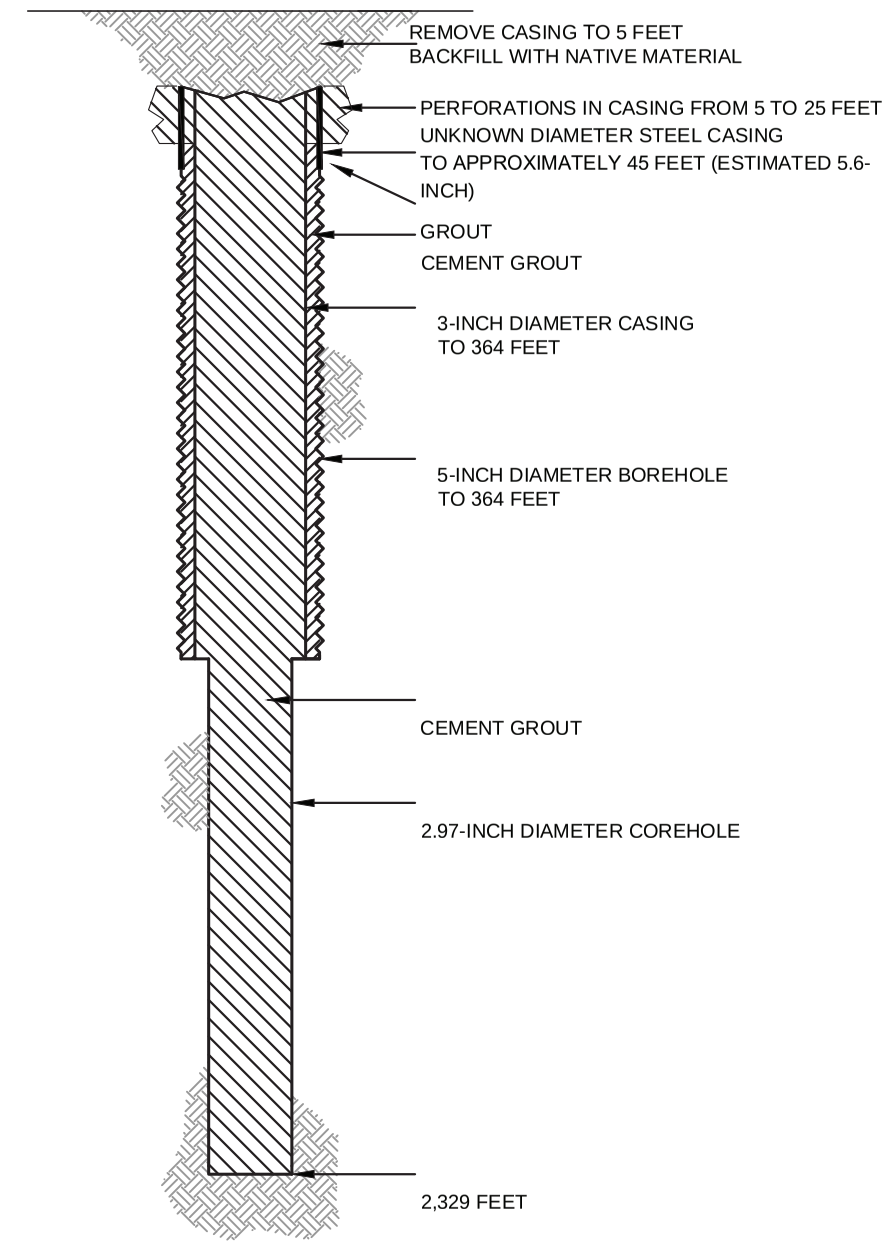

HALEY ALDRICH

FLORENCE COPPER, INC.
FLORENCE, ARIZONA

COREHOLE 412MF DIAGRAM

FLORENCE COPPER INC.

NOT TO SCALE
SEPTEMBER 2019

FIGURE 1

MOBINI, GITA Printed: 4/21/2017 12:00 PM Layout: ABANDON (2)
G:\PROJECTS\CURIS RESOURCES\38706-CURIS FEASIBILITY\DRAWINGS\EPA\WELL ABANDON\415S_ABANDON.DWG

OMB No. 2040-0042 Approval Expires 4/30/2022

United States Environmental Protection Agency

WELL REWORK RECORD, PLUGGING AND ABANDONMENT PLAN, OR PLUGGING AND ABANDONMENT AFFIDAVIT

Name and Address, Phone Number and/or Email of Permittee

Florence Copper Project
1575 W Hunt Hwy,
Florence, AZ 85132

Permit or EPA ID Number	API Number	Full Well Name
R9UIC-AZ3-FY11-1		413MF

State	County
Arizona	Pinal

Locate well in two directions from nearest lines of quarter section and drilling unit

Surface Location

SW 1/4 of SE 1/4 of Section 28 Township 4S Range 9E

Latitude 33.04735776

Longitude -111.4264985

_____ ft. from (N/S) _____ Line of quarter section

_____ ft. from (E/W) _____ Line of quarter section.

Well Class	Timing of Action (pick one)	Type of Action (pick one)
☐ Class I ☐ Class II ☑ Class III ☐ Class V	☑ Notice Prior to Work Date Expected to Commence March 2021 ☐ Report After Work Date Work Ended	☐ Well Rework ☑ Plugging and Abandonment ☐ Conversion to a Non-Injection Well

Provide a narrative description of the work planned to be performed, or that was performed. Use additional pages as necessary. See instructions.

A workover rig capable of performing the required abandonment operations at the required depths will be moved in and set up over the core hole. The core hole will be inspected to determine the depth to which the hole remains open and if any obstructions are present in the core hole; the presence and condition of any existing collar will also be documented. If necessary, the core hole will be cleaned out to a depth of at least 100 feet below the bedrock-LBFU contact to enable placement of cement seals.

If collar is present, an attempt will be made to remove it. If removal of the collar is not feasible, it will be left in the hole and perforated as needed to allow an annular seal to be placed to a depth of at least 25 feet bgs. In areas of agricultural use, the surface casing will be cut at least 5 feet bgs and removed.

If the collar cannot be removed, it will be perforated from at least 20 feet below the bedrock-LBFU contact to at least 20 feet above the contact; from at least 20 feet below the base of the MFGU to at least 20 feet above the top of the MFGU; and from at least 25 feet bgs to 5 feet bgs.

A tremie pipe will be used to place Type V cement in the open core hole from the bottom of the core hole to the top of the core hole. Cement retainers, as described above, will be used to force cement grout into the annulus and behind perforated intervals, as necessary.

If the hole has been obstructed, as much cement as possible will be placed from 100 feet below the LBFU-bedrock contact to the top of the core hole.

The volume of Type V cement will be recorded and will not be less than the estimated volume of material required to fill each interval. All cement grout will consist of Type V cement, or equivalent approved in accordance with the UIC Permit.

Certification

I certify under the penalty of law that I have personally examined and am familiar with the information submitted in this document and all attachments and that, based on my inquiry of those individuals immediately responsible for obtaining the information, I believe that the information is true, accurate, and complete. I am aware that there are significant penalties for submitting false information, including the possibliity of fine and imprisonment. (Ref. 40 CFR § 144.32)

Name and Official Title *(Please type or print)*	Signature	Date Signed
Dan Johnson, VP - General Manager		10/3/2019

INSTRUCTIONS FOR FORM 7520-19

This form replaces forms 7520-12 and 7520-14. Use this form only when work is planned or has occurred that affects the well's construction or operation as an injection well, including work on the casing, tubing or packer (or for shallow Class V wells, the subsurface fluid emplacement network). Use one form per injection well. While reports or other information developed by contractors or service companies may be attached, this form must be signed by a responsible entity as described at 40 CFR 144.32. Note: operators closing Class V wells should use Form 7520-17.

NAME, ADDRESS, PHONE AND/OR EMAIL OF PERMITTEE: Enter the name and street address, city/town, state, and ZIP code of the permittee. Also provide an email address (if available) and/or a phone number.

PERMIT OR EPA ID NUMBER: Enter the well identification number or permit number assigned to the well by the EPA or the permitting authority.

API NUMBER: Enter the number assigned by the local jurisdiction (usually a State Oil and Gas Agency) using the American Petroleum Institute standard numbering system.

FULL WELL NAME: Enter the full name of the well or project.

Enter the **STATE** and **COUNTY** where the well is located. For States that do not have counties, use the name of that State's equivalent jurisdiction at a more local level.

WELL LOCATION: Fill in the complete township, range, and section to the nearest quarter-quarter section. A township is north or south of the baseline, and a range is east or west of the principal meridian (e.g., T12N, R34W). Also include the distance, in feet, from the nearest north or south line and nearest east or west line of the quarter-section. Also, enter the **latitude** and **longitude** of the well in decimal degrees, to five or six places if possible; be sure to include a negative sign for the longitude of a well in the Western Hemisphere and a negative sign for the latitude of a well in the Southern Hemisphere.

Enter the **WELL CLASS,** i.e., the class of injection well as defined in 40 CFR 144.6.

TIMING OF THE ACTION: Check ***Notice prior to work*** if the activity has not yet occurred (i.e., is planned). Check ***Report after work*** if the activity described has already occurred. As appropriate, include the date the activity is expected to start or the date the activity was completed. (Note this may not be available, e.g., for a plugging plan submitted with a permit application.)

TYPE OF ACTION: Check the appropriate box to describe the kind of activity being reported. Check ***Well Rework*** for work that was/will be performed on the well after it has already been in operation as an injection well. Check ***Plugging and Abandonment*** to report on plans for or descriptions of final closure/plugging after use as an injection well. Check ***Conversion to a Non-Injection Well*** if the well is to be converted to something other than an injection well.

Provide a **NARRATIVE DESCRIPTION** of the work planned to be performed, or that was performed. The narrative should include a description of the main procedures planned or that occurred during the work activity. A service company report, daily report, or similar document may be attached if it includes all the requested information and is clear and legible.

For well reworks, include the following information: The reason for the well rework; depths of activity; type of activity; changes to injection well configuration, well casing, or cement behind casing; any plug added to the well and its depth; any newly drilled interval and its depth; method(s) to demonstrate that the well has mechanical integrity (as applicable); and any deviations from the approved rework plan (as applicable).

For a well plugging plan, include the following information: Reason for the well plugging; number of plugs placed, and their depths; materials used as plugs (e.g., cast iron bridge plug, cement, cement retainer); method to set plugs; and wait-on-cement times, if any. Also provide one or more cost estimates from an independent firm in the business of plugging and abandoning wells to plug the well as described in the plan.

For well plugging affidavit, include the following information: Reason for the well plugging; number of plugs placed, and their depths; materials used as plugs (e.g., cast iron bridge plug, cement, cement retainer); method to set plugs; wait-on-cement times, if any; and any deviations from the approved plugging plan (if applicable).

For conversion to a non-injection well, include the following information: Depths of activity; type of activity; changes to injection well configuration, well casing, or cement behind casing; any plug added to the well and its depth; any newly drilled interval and its depth; depths of new perforations; and method(s) to demonstrate that the well has mechanical integrity (as applicable).

For all of the above activities, include a well sketch depicting the work, results of well tests/logging performed, service company tickets, and any other available information demonstrating how the work was/is to be performed. Also, specify whether depths are below ground surface, relative to Kelly bushing, etc.

CERTIFICATION: This form must be signed and dated by either: a responsible corporate officer for a corporation, by a general partner for a partnership, by the proprietor of a sole proprietorship, or by a principal executive or ranking elected official for a public agency.

PAPERWORK REDUCTION ACT NOTICE: The public reporting and recordkeeping burden for this collection of information is estimated to average between 6.0 and 7.9 hours per response, depending on the injection well class. Burden means the total time, effort, or financial resource expended by persons to generate, maintain, retain, or disclose or provide information to or for a Federal Agency. This includes the time needed to review instructions; develop, acquire, install, and utilize technology and systems for the purposes of collecting, validating, and verifying information, processing and maintaining information, and disclosing and providing information; adjust the existing ways to comply with any previously applicable instructions and requirements; train personnel to be able to respond to the collection of information; search data sources; complete and review the collection of information; and, transmit or otherwise disclose the information. An agency may not conduct or sponsor, and a person is not required to respond to, a collection of information unless it displays a currently valid OMB control number. Send comments on the Agency's need for this information, the accuracy of the provided burden estimates, and any suggested methods for minimizing respondent burden, including the use of automated collection techniques to Director, Collection Strategies Division, U.S. Environmental Protection Agency (2822), 1200 Pennsylvania Ave., NW., Washington, D.C. 20460. Include the OMB control number in any correspondence. Do not send the completed forms to this address.

AS-BUILT COREHOLE 413MF

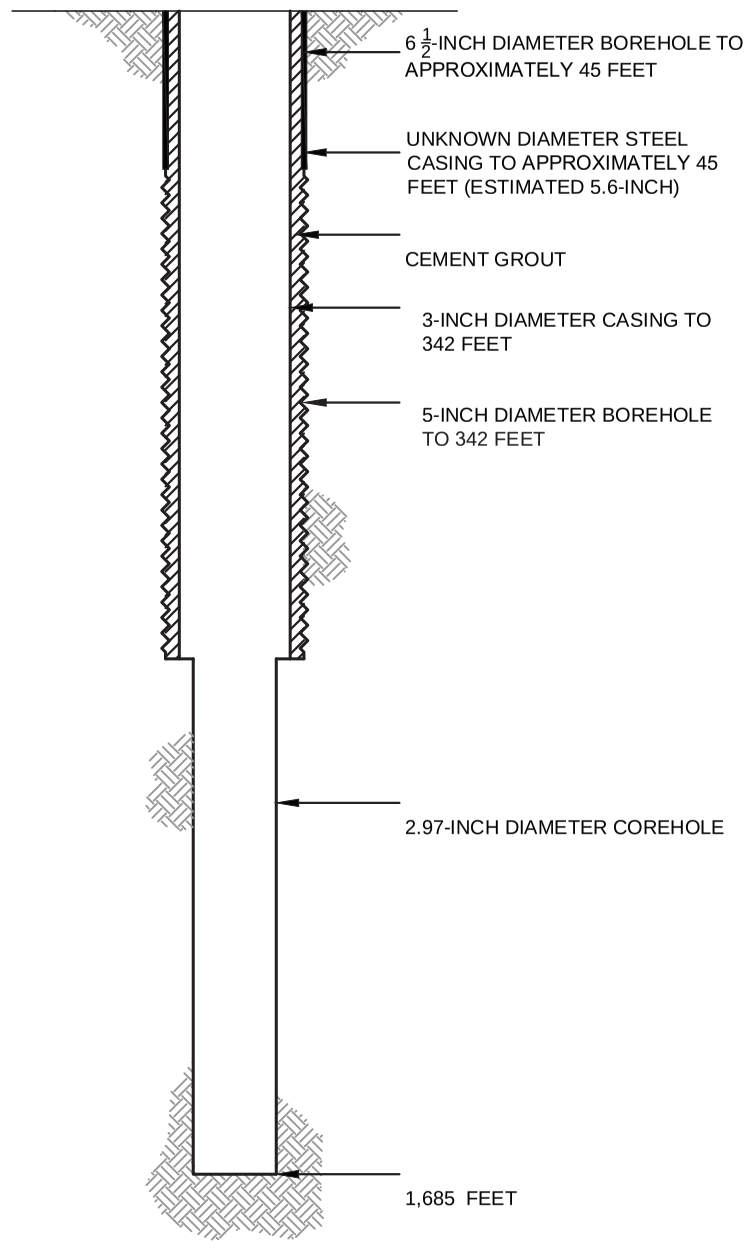

PROPOSED PLUGGING AND ABANDONMENT COREHOLE 413MF

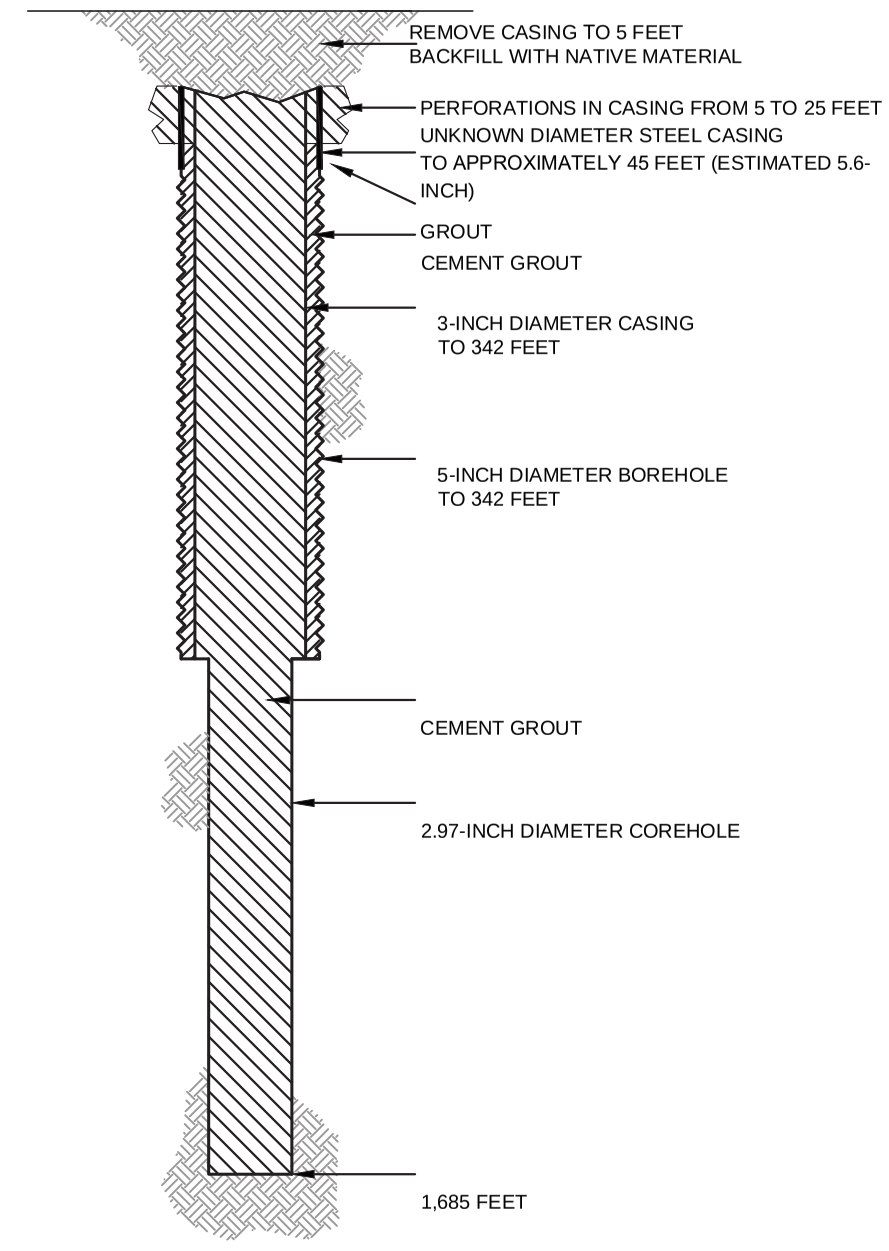

HALEY ALDRICH

FLORENCE COPPER, INC.
FLORENCE, ARIZONA

COREHOLE 413MF DIAGRAM

FLORENCE COPPER INC.

NOT TO SCALE
SEPTEMBER 2019

FIGURE 1

MOBINI, GITA Printed: 4/21/2017 12:00 PM Layout: ABANDON (2)
G:\PROJECTS\CURIS RESOURCES\38706-CURIS FEASIBILITY\DRAWINGS\EPA\WELL ABANDON\415S_ABANDON.DWG

OMB No. 2040-0042 Approval Expires 4/30/2022

United States Environmental Protection Agency

WELL REWORK RECORD, PLUGGING AND ABANDONMENT PLAN, OR PLUGGING AND ABANDONMENT AFFIDAVIT

Name and Address, Phone Number and/or Email of Permittee

Florence Copper Project
1575 W Hunt Hwy,
Florence, AZ 85132

Permit or EPA ID Number	API Number	Full Well Name
R9UIC-AZ3-FY11-1		416S

State	County
Arizona	Pinal

Locate well in two directions from nearest lines of quarter section and drilling unit

Latitude 33.05154392

Longitude -111.4317787

Surface Location

NE **1/4 of** SW **1/4 of Section** 28 **Township** 4S **Range** 9E

_____ **ft. from (N/S)** _____ **Line of quarter section**

_____ **ft. from (E/W)** _____ **Line of quarter section.**

Well Class	Timing of Action (pick one)	Type of Action (pick one)
☐ Class I ☐ Class II ☑ Class III ☐ Class V	☑ Notice Prior to Work Date Expected to Commence March 2021 ☐ Report After Work Date Work Ended	☐ Well Rework ☑ Plugging and Abandonment ☐ Conversion to a Non-Injection Well

Provide a narrative description of the work planned to be performed, or that was performed. Use additional pages as necessary. See instructions.

A workover rig capable of performing the required abandonment operations at the required depths will be moved in and set up over the core hole. The core hole will be inspected to determine the depth to which the hole remains open and if any obstructions are present in the core hole; the presence and condition of any existing collar will also be documented. If necessary, the core hole will be cleaned out to a depth of at least 100 feet below the bedrock-LBFU contact to enable placement of cement seals.

If collar is present, an attempt will be made to remove it. If removal of the collar is not feasible, it will be left in the hole and perforated as needed to allow an annular seal to be placed to a depth of at least 25 feet bgs. In areas of agricultural use, the surface casing will be cut at least 5 feet bgs and removed.

If the collar cannot be removed, it will be perforated from at least 20 feet below the bedrock-LBFU contact to at least 20 feet above the contact; from at least 20 feet below the base of the MFGU to at least 20 feet above the top of the MFGU; and from at least 25 feet bgs to 5 feet bgs.

A tremie pipe will be used to place Type V cement in the open core hole from the bottom of the core hole to the top of the core hole. Cement retainers, as described above, will be used to force cement grout into the annulus and behind perforated intervals, as necessary.

If the hole has been obstructed, as much cement as possible will be placed from 100 feet below the LBFU-bedrock contact to the top of the core hole.

The volume of Type V cement will be recorded and will not be less than the estimated volume of material required to fill each interval. All cement grout will consist of Type V cement, or equivalent approved in accordance with the UIC Permit.

Certification

I certify under the penalty of law that I have personally examined and am familiar with the information submitted in this document and all attachments and that, based on my inquiry of those individuals immediately responsible for obtaining the information, I believe that the information is true, accurate, and complete. I am aware that there are significant penalties for submitting false information, including the possibliity of fine and imprisonment. (Ref. 40 CFR § 144.32)

Name and Official Title *(Please type or print)*	Signature	Date Signed
Dan Johnson, VP - General Manager		10/3/2019

INSTRUCTIONS FOR FORM 7520-19

This form replaces forms 7520-12 and 7520-14. Use this form only when work is planned or has occurred that affects the well's construction or operation as an injection well, including work on the casing, tubing or packer (or for shallow Class V wells, the subsurface fluid emplacement network). Use one form per injection well. While reports or other information developed by contractors or service companies may be attached, this form must be signed by a responsible entity as described at 40 CFR 144.32. Note: operators closing Class V wells should use Form 7520-17.

NAME, ADDRESS, PHONE AND/OR EMAIL OF PERMITTEE: Enter the name and street address, city/town, state, and ZIP code of the permittee. Also provide an email address (if available) and/or a phone number.

PERMIT OR EPA ID NUMBER: Enter the well identification number or permit number assigned to the well by the EPA or the permitting authority.

API NUMBER: Enter the number assigned by the local jurisdiction (usually a State Oil and Gas Agency) using the American Petroleum Institute standard numbering system.

FULL WELL NAME: Enter the full name of the well or project.

Enter the **STATE** and **COUNTY** where the well is located. For States that do not have counties, use the name of that State's equivalent jurisdiction at a more local level.

WELL LOCATION: Fill in the complete township, range, and section to the nearest quarter-quarter section. A township is north or south of the baseline, and a range is east or west of the principal meridian (e.g., T12N, R34W). Also include the distance, in feet, from the nearest north or south line and nearest east or west line of the quarter-section. Also, enter the **latitude** and **longitude** of the well in decimal degrees, to five or six places if possible; be sure to include a negative sign for the longitude of a well in the Western Hemisphere and a negative sign for the latitude of a well in the Southern Hemisphere.

Enter the **WELL CLASS,** i.e., the class of injection well as defined in 40 CFR 144.6.

TIMING OF THE ACTION: Check ***Notice prior to work*** if the activity has not yet occurred (i.e., is planned). Check ***Report after work*** if the activity described has already occurred. As appropriate, include the date the activity is expected to start or the date the activity was completed. (Note this may not be available, e.g., for a plugging plan submitted with a permit application.)

TYPE OF ACTION: Check the appropriate box to describe the kind of activity being reported. Check ***Well Rework*** for work that was/will be performed on the well after it has already been in operation as an injection well. Check ***Plugging and Abandonment*** to report on plans for or descriptions of final closure/plugging after use as an injection well. Check ***Conversion to a Non-Injection Well*** if the well is to be converted to something other than an injection well.

Provide a **NARRATIVE DESCRIPTION** of the work planned to be performed, or that was performed. The narrative should include a description of the main procedures planned or that occurred during the work activity. A service company report, daily report, or similar document may be attached if it includes all the requested information and is clear and legible.

For well reworks, include the following information: The reason for the well rework; depths of activity; type of activity; changes to injection well configuration, well casing, or cement behind casing; any plug added to the well and its depth; any newly drilled interval and its depth; method(s) to demonstrate that the well has mechanical integrity (as applicable); and any deviations from the approved rework plan (as applicable).

For a well plugging plan, include the following information: Reason for the well plugging; number of plugs placed, and their depths; materials used as plugs (e.g., cast iron bridge plug, cement, cement retainer); method to set plugs; and wait-on-cement times, if any. Also provide one or more cost estimates from an independent firm in the business of plugging and abandoning wells to plug the well as described in the plan.

For well plugging affidavit, include the following information: Reason for the well plugging; number of plugs placed, and their depths; materials used as plugs (e.g., cast iron bridge plug, cement, cement retainer); method to set plugs; wait-on-cement times, if any; and any deviations from the approved plugging plan (if applicable).

For conversion to a non-injection well, include the following information: Depths of activity; type of activity; changes to injection well configuration, well casing, or cement behind casing; any plug added to the well and its depth; any newly drilled interval and its depth; depths of new perforations; and method(s) to demonstrate that the well has mechanical integrity (as applicable).

For all of the above activities, include a well sketch depicting the work, results of well tests/logging performed, service company tickets, and any other available information demonstrating how the work was/is to be performed. Also, specify whether depths are below ground surface, relative to Kelly bushing, etc.

CERTIFICATION: This form must be signed and dated by either: a responsible corporate officer for a corporation, by a general partner for a partnership, by the proprietor of a sole proprietorship, or by a principal executive or ranking elected official for a public agency.

PAPERWORK REDUCTION ACT NOTICE: The public reporting and recordkeeping burden for this collection of information is estimated to average between 6.0 and 7.9 hours per response, depending on the injection well class. Burden means the total time, effort, or financial resource expended by persons to generate, maintain, retain, or disclose or provide information to or for a Federal Agency. This includes the time needed to review instructions; develop, acquire, install, and utilize technology and systems for the purposes of collecting, validating, and verifying information, processing and maintaining information, and disclosing and providing information; adjust the existing ways to comply with any previously applicable instructions and requirements; train personnel to be able to respond to the collection of information; search data sources; complete and review the collection of information; and, transmit or otherwise disclose the information. An agency may not conduct or sponsor, and a person is not required to respond to, a collection of information unless it displays a currently valid OMB control number. Send comments on the Agency's need for this information, the accuracy of the provided burden estimates, and any suggested methods for minimizing respondent burden, including the use of automated collection techniques to Director, Collection Strategies Division, U.S. Environmental Protection Agency (2822), 1200 Pennsylvania Ave., NW., Washington, D.C. 20460. Include the OMB control number in any correspondence. Do not send the completed forms to this address.

AS-BUILT COREHOLE 416S

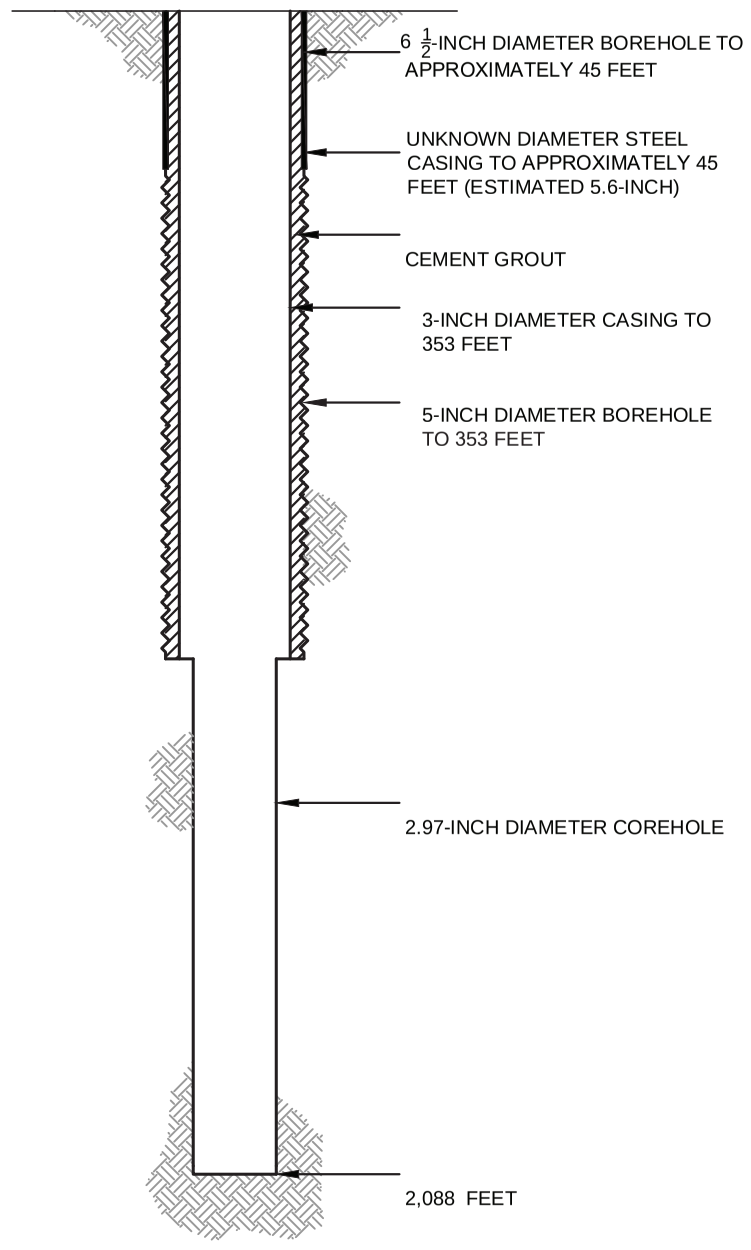

PROPOSED PLUGGING AND ABANDONMENT COREHOLE 416S

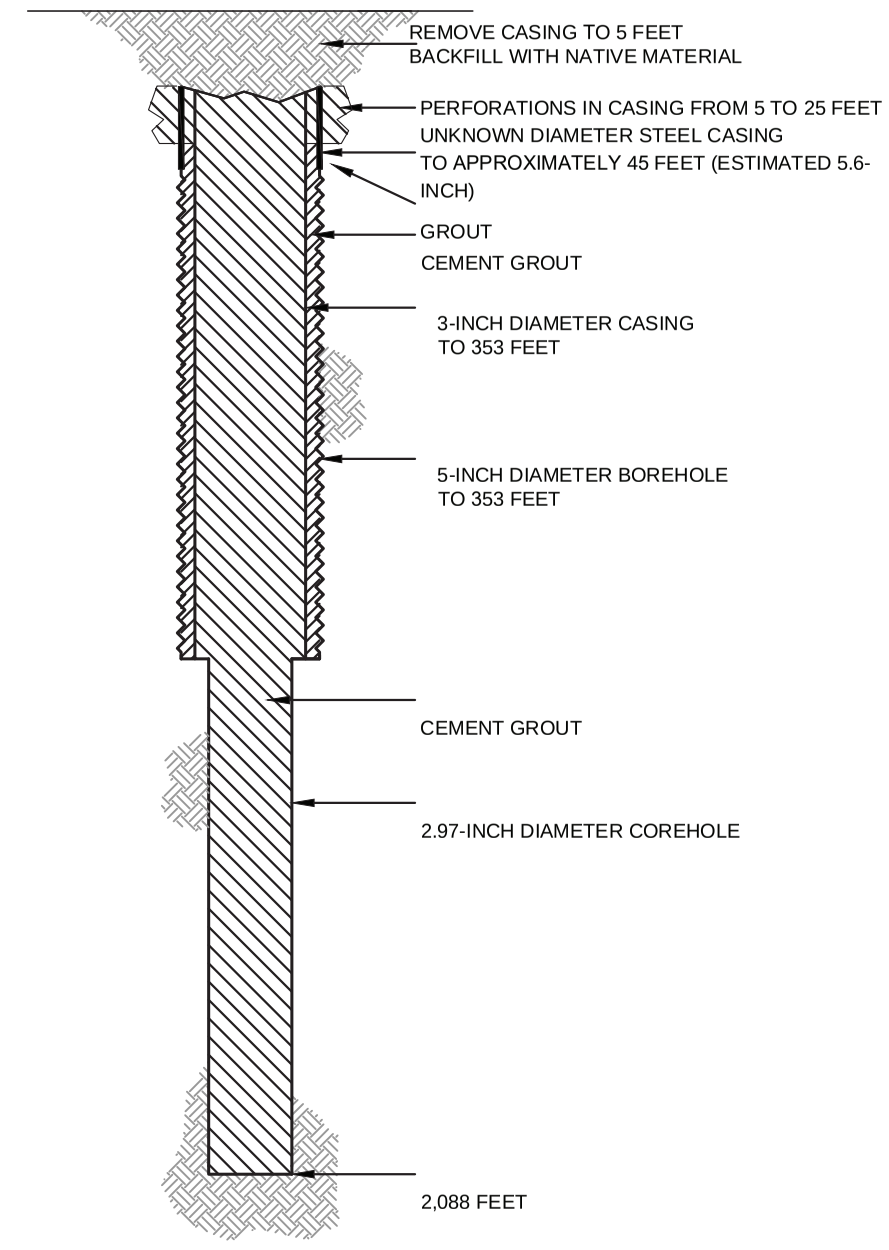

HALEY ALDRICH

FLORENCE COPPER, INC.
FLORENCE, ARIZONA

COREHOLE 416S DIAGRAM

FLORENCE COPPER INC.

NOT TO SCALE
SEPTEMBER 2019

FIGURE 1

MOBINI, GITA Printed: 4/21/2017 12:00 PM Layout: ABANDON (2)
G:\PROJECTS\CURIS RESOURCES\38706-CURIS FEASIBILITY\DRAWINGS\EPA\WELL ABANDON\415S_ABANDON.DWG

OMB No. 2040-0042 Approval Expires 4/30/2022

United States Environmental Protection Agency

EPA

WELL REWORK RECORD, PLUGGING AND ABANDONMENT PLAN, OR PLUGGING AND ABANDONMENT AFFIDAVIT

Name and Address, Phone Number and/or Email of Permittee

Florence Copper Project
1575 W Hunt Hwy,
Florence, AZ 85132

Permit or EPA ID Number	API Number	Full Well Name
R9UIC-AZ3-FY11-1		417S

State	County
Arizona	Pinal

Locate well in two directions from nearest lines of quarter section and drilling unit

Latitude 33.05274038

Longitude -111.433404

Surface Location

NE **1/4 of** SW **1/4 of Section** 28 **Township** 4S **Range** 9E

_____ **ft. from (N/S)** _____ **Line of quarter section**

_____ **ft. from (E/W)** _____ **Line of quarter section.**

Well Class	Timing of Action (pick one)	Type of Action (pick one)
☐ Class I ☐ Class II ☑ Class III ☐ Class V	☑ Notice Prior to Work Date Expected to Commence March 2021 ☐ Report After Work Date Work Ended	☐ Well Rework ☑ Plugging and Abandonment ☐ Conversion to a Non-Injection Well

Provide a narrative description of the work planned to be performed, or that was performed. Use additional pages as necessary. See instructions.

A workover rig capable of performing the required abandonment operations at the required depths will be moved in and set up over the core hole. The core hole will be inspected to determine the depth to which the hole remains open and if any obstructions are present in the core hole; the presence and condition of any existing collar will also be documented. If necessary, the core hole will be cleaned out to a depth of at least 100 feet below the bedrock-LBFU contact to enable placement of cement seals.

If collar is present, an attempt will be made to remove it. If removal of the collar is not feasible, it will be left in the hole and perforated as needed to allow an annular seal to be placed to a depth of at least 25 feet bgs. In areas of agricultural use, the surface casing will be cut at least 5 feet bgs and removed.

If the collar cannot be removed, it will be perforated from at least 20 feet below the bedrock-LBFU contact to at least 20 feet above the contact; from at least 20 feet below the base of the MFGU to at least 20 feet above the top of the MFGU; and from at least 25 feet bgs to 5 feet bgs.

A tremie pipe will be used to place Type V cement in the open core hole from the bottom of the core hole to the top of the core hole. Cement retainers, as described above, will be used to force cement grout into the annulus and behind perforated intervals, as necessary.

If the hole has been obstructed, as much cement as possible will be placed from 100 feet below the LBFU-bedrock contact to the top of the core hole.

The volume of Type V cement will be recorded and will not be less than the estimated volume of material required to fill each interval. All cement grout will consist of Type V cement, or equivalent approved in accordance with the UIC Permit.

Certification

I certify under the penalty of law that I have personally examined and am familiar with the information submitted in this document and all attachments and that, based on my inquiry of those individuals immediately responsible for obtaining the information, I believe that the information is true, accurate, and complete. I am aware that there are significant penalties for submitting false information, including the possibliity of fine and imprisonment. (Ref. 40 CFR § 144.32)

Name and Official Title *(Please type or print)*	Signature	Date Signed
Dan Johnson, VP - General Manager		10/3/2019

INSTRUCTIONS FOR FORM 7520-19

This form replaces forms 7520-12 and 7520-14. Use this form only when work is planned or has occurred that affects the well's construction or operation as an injection well, including work on the casing, tubing or packer (or for shallow Class V wells, the subsurface fluid emplacement network). Use one form per injection well. While reports or other information developed by contractors or service companies may be attached, this form must be signed by a responsible entity as described at 40 CFR 144.32. Note: operators closing Class V wells should use Form 7520-17.

NAME, ADDRESS, PHONE AND/OR EMAIL OF PERMITTEE: Enter the name and street address, city/town, state, and ZIP code of the permittee. Also provide an email address (if available) and/or a phone number.

PERMIT OR EPA ID NUMBER: Enter the well identification number or permit number assigned to the well by the EPA or the permitting authority.

API NUMBER: Enter the number assigned by the local jurisdiction (usually a State Oil and Gas Agency) using the American Petroleum Institute standard numbering system.

FULL WELL NAME: Enter the full name of the well or project.

Enter the **STATE** and **COUNTY** where the well is located. For States that do not have counties, use the name of that State's equivalent jurisdiction at a more local level.

WELL LOCATION: Fill in the complete township, range, and section to the nearest quarter-quarter section. A township is north or south of the baseline, and a range is east or west of the principal meridian (e.g., T12N, R34W). Also include the distance, in feet, from the nearest north or south line and nearest east or west line of the quarter-section. Also, enter the **latitude** and **longitude** of the well in decimal degrees, to five or six places if possible; be sure to include a negative sign for the longitude of a well in the Western Hemisphere and a negative sign for the latitude of a well in the Southern Hemisphere.

Enter the **WELL CLASS,** i.e., the class of injection well as defined in 40 CFR 144.6.

TIMING OF THE ACTION: Check ***Notice prior to work*** if the activity has not yet occurred (i.e., is planned). Check ***Report after work*** if the activity described has already occurred. As appropriate, include the date the activity is expected to start or the date the activity was completed. (Note this may not be available, e.g., for a plugging plan submitted with a permit application.)

TYPE OF ACTION: Check the appropriate box to describe the kind of activity being reported. Check ***Well Rework*** for work that was/will be performed on the well after it has already been in operation as an injection well. Check ***Plugging and Abandonment*** to report on plans for or descriptions of final closure/plugging after use as an injection well. Check ***Conversion to a Non-Injection Well*** if the well is to be converted to something other than an injection well.

Provide a **NARRATIVE DESCRIPTION** of the work planned to be performed, or that was performed. The narrative should include a description of the main procedures planned or that occurred during the work activity. A service company report, daily report, or similar document may be attached if it includes all the requested information and is clear and legible.

For well reworks, include the following information: The reason for the well rework; depths of activity; type of activity; changes to injection well configuration, well casing, or cement behind casing; any plug added to the well and its depth; any newly drilled interval and its depth; method(s) to demonstrate that the well has mechanical integrity (as applicable); and any deviations from the approved rework plan (as applicable).

For a well plugging plan, include the following information: Reason for the well plugging; number of plugs placed, and their depths; materials used as plugs (e.g., cast iron bridge plug, cement, cement retainer); method to set plugs; and wait-on-cement times, if any. Also provide one or more cost estimates from an independent firm in the business of plugging and abandoning wells to plug the well as described in the plan.

For well plugging affidavit, include the following information: Reason for the well plugging; number of plugs placed, and their depths; materials used as plugs (e.g., cast iron bridge plug, cement, cement retainer); method to set plugs; wait-on-cement times, if any; and any deviations from the approved plugging plan (if applicable).

For conversion to a non-injection well, include the following information: Depths of activity; type of activity; changes to injection well configuration, well casing, or cement behind casing; any plug added to the well and its depth; any newly drilled interval and its depth; depths of new perforations; and method(s) to demonstrate that the well has mechanical integrity (as applicable).

For all of the above activities, include a well sketch depicting the work, results of well tests/logging performed, service company tickets, and any other available information demonstrating how the work was/is to be performed. Also, specify whether depths are below ground surface, relative to Kelly bushing, etc.

CERTIFICATION: This form must be signed and dated by either: a responsible corporate officer for a corporation, by a general partner for a partnership, by the proprietor of a sole proprietorship, or by a principal executive or ranking elected official for a public agency.

PAPERWORK REDUCTION ACT NOTICE: The public reporting and recordkeeping burden for this collection of information is estimated to average between 6.0 and 7.9 hours per response, depending on the injection well class. Burden means the total time, effort, or financial resource expended by persons to generate, maintain, retain, or disclose or provide information to or for a Federal Agency. This includes the time needed to review instructions; develop, acquire, install, and utilize technology and systems for the purposes of collecting, validating, and verifying information, processing and maintaining information, and disclosing and providing information; adjust the existing ways to comply with any previously applicable instructions and requirements; train personnel to be able to respond to the collection of information; search data sources; complete and review the collection of information; and, transmit or otherwise disclose the information. An agency may not conduct or sponsor, and a person is not required to respond to, a collection of information unless it displays a currently valid OMB control number. Send comments on the Agency's need for this information, the accuracy of the provided burden estimates, and any suggested methods for minimizing respondent burden, including the use of automated collection techniques to Director, Collection Strategies Division, U.S. Environmental Protection Agency (2822), 1200 Pennsylvania Ave., NW., Washington, D.C. 20460. Include the OMB control number in any correspondence. Do not send the completed forms to this address.

AS-BUILT COREHOLE 417S

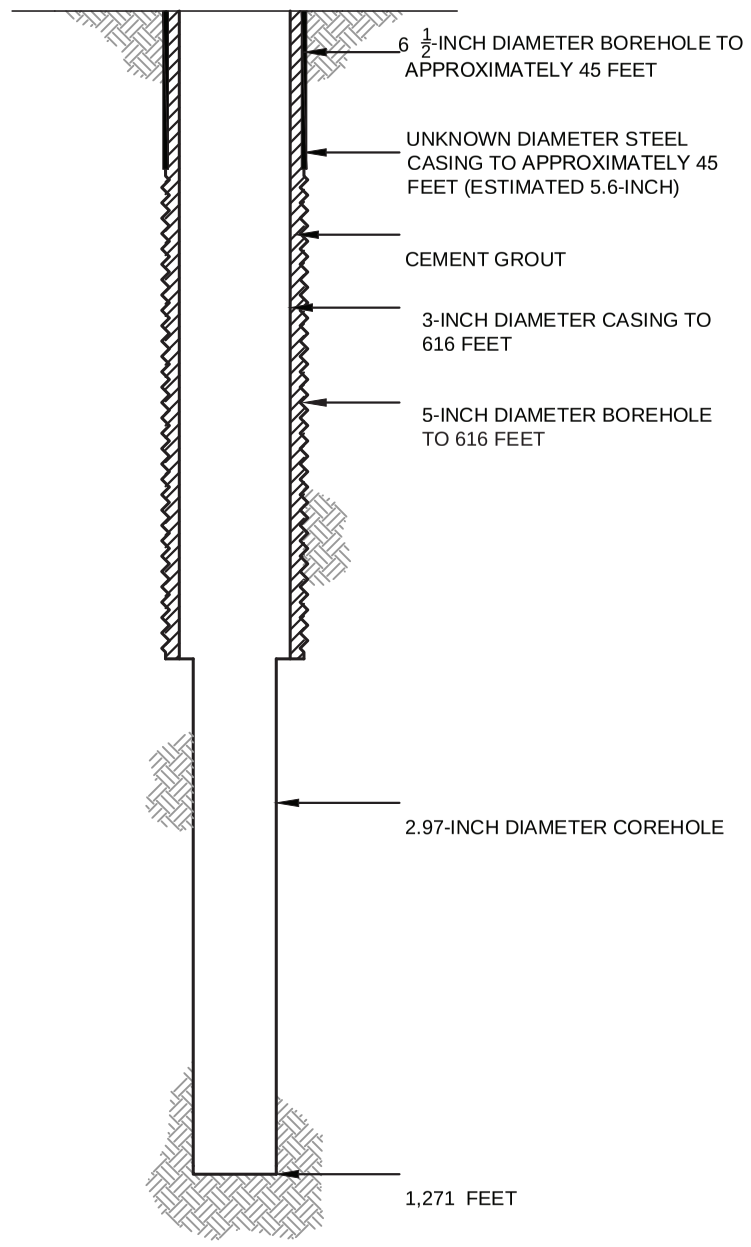

PROPOSED PLUGGING AND ABANDONMENT COREHOLE 417S

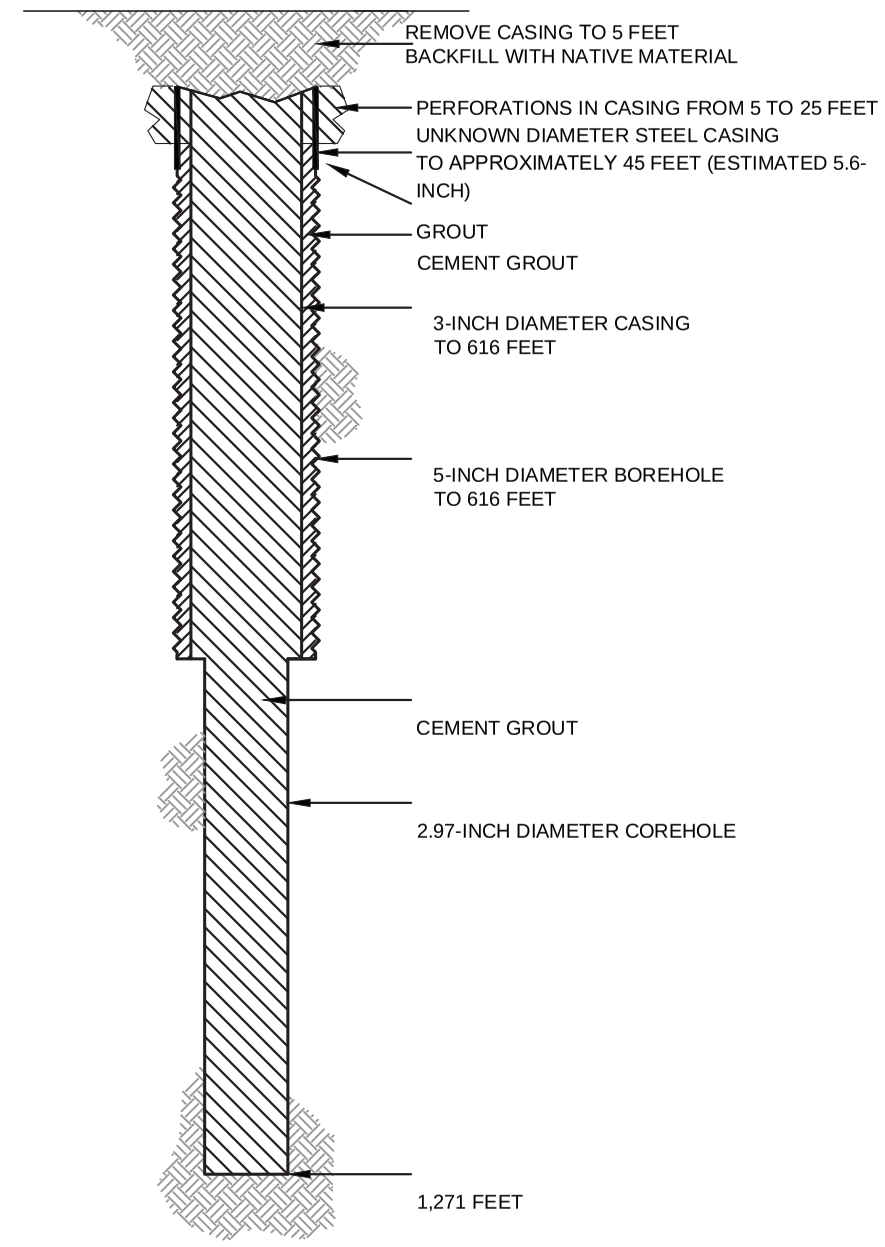

HALEY ALDRICH

FLORENCE COPPER, INC.
FLORENCE, ARIZONA

COREHOLE 417S DIAGRAM

FLORENCE COPPER INC.

NOT TO SCALE
SEPTEMBER 2019

FIGURE 1

MOBINI, GITA Printed: 4/21/2017 12:00 PM Layout: ABANDON (2)
G:\PROJECTS\CURIS RESOURCES\38706-CURIS FEASIBILITY\DRAWINGS\EPA\WELL ABANDON\415S_ABANDON.DWG

OMB No. 2040-0042 Approval Expires 4/30/2022

United States Environmental Protection Agency

WELL REWORK RECORD, PLUGGING AND ABANDONMENT PLAN, OR PLUGGING AND ABANDONMENT AFFIDAVIT

Name and Address, Phone Number and/or Email of Permittee

Florence Copper Project
1575 W Hunt Hwy,
Florence, AZ 85132

Permit or EPA ID Number	API Number	Full Well Name
R9UIC-AZ3-FY11-1		420S

State	County
Arizona	Pinal

Locate well in two directions from nearest lines of quarter section and drilling unit

Latitude 33.0521374

Longitude -111.4313675

Surface Location

NE **1/4 of** SW **1/4 of Section** 28 **Township** 4S **Range** 9E

_____ **ft. from (N/S)** _____ **Line of quarter section**

_____ **ft. from (E/W)** _____ **Line of quarter section.**

Well Class	Timing of Action (pick one)	Type of Action (pick one)
☐ Class I ☐ Class II ☑ Class III ☐ Class V	☑ Notice Prior to Work Date Expected to Commence March 2021 ☐ Report After Work Date Work Ended	☐ Well Rework ☑ Plugging and Abandonment ☐ Conversion to a Non-Injection Well

Provide a narrative description of the work planned to be performed, or that was performed. Use additional pages as necessary. See instructions.

A workover rig capable of performing the required abandonment operations at the required depths will be moved in and set up over the core hole. The core hole will be inspected to determine the depth to which the hole remains open and if any obstructions are present in the core hole; the presence and condition of any existing collar will also be documented. If necessary, the core hole will be cleaned out to a depth of at least 100 feet below the bedrock-LBFU contact to enable placement of cement seals.

If collar is present, an attempt will be made to remove it. If removal of the collar is not feasible, it will be left in the hole and perforated as needed to allow an annular seal to be placed to a depth of at least 25 feet bgs. In areas of agricultural use, the surface casing will be cut at least 5 feet bgs and removed.

If the collar cannot be removed, it will be perforated from at least 20 feet below the bedrock-LBFU contact to at least 20 feet above the contact; from at least 20 feet below the base of the MFGU to at least 20 feet above the top of the MFGU; and from at least 25 feet bgs to 5 feet bgs.

A tremie pipe will be used to place Type V cement in the open core hole from the bottom of the core hole to the top of the core hole. Cement retainers, as described above, will be used to force cement grout into the annulus and behind perforated intervals, as necessary.

If the hole has been obstructed, as much cement as possible will be placed from 100 feet below the LBFU-bedrock contact to the top of the core hole.

The volume of Type V cement will be recorded and will not be less than the estimated volume of material required to fill each interval. All cement grout will consist of Type V cement, or equivalent approved in accordance with the UIC Permit.

Certification

I certify under the penalty of law that I have personally examined and am familiar with the information submitted in this document and all attachments and that, based on my inquiry of those individuals immediately responsible for obtaining the information, I believe that the information is true, accurate, and complete. I am aware that there are significant penalties for submitting false information, including the possibliity of fine and imprisonment. (Ref. 40 CFR § 144.32)

Name and Official Title *(Please type or print)*	Signature	Date Signed
Dan Johnson, VP - General Manager		10/3/2019

INSTRUCTIONS FOR FORM 7520-19

This form replaces forms 7520-12 and 7520-14. Use this form only when work is planned or has occurred that affects the well's construction or operation as an injection well, including work on the casing, tubing or packer (or for shallow Class V wells, the subsurface fluid emplacement network). Use one form per injection well. While reports or other information developed by contractors or service companies may be attached, this form must be signed by a responsible entity as described at 40 CFR 144.32. Note: operators closing Class V wells should use Form 7520-17.

NAME, ADDRESS, PHONE AND/OR EMAIL OF PERMITTEE: Enter the name and street address, city/town, state, and ZIP code of the permittee. Also provide an email address (if available) and/or a phone number.

PERMIT OR EPA ID NUMBER: Enter the well identification number or permit number assigned to the well by the EPA or the permitting authority.

API NUMBER: Enter the number assigned by the local jurisdiction (usually a State Oil and Gas Agency) using the American Petroleum Institute standard numbering system.

FULL WELL NAME: Enter the full name of the well or project.

Enter the **STATE** and **COUNTY** where the well is located. For States that do not have counties, use the name of that State's equivalent jurisdiction at a more local level.

WELL LOCATION: Fill in the complete township, range, and section to the nearest quarter-quarter section. A township is north or south of the baseline, and a range is east or west of the principal meridian (e.g., T12N, R34W). Also include the distance, in feet, from the nearest north or south line and nearest east or west line of the quarter-section. Also, enter the **latitude** and **longitude** of the well in decimal degrees, to five or six places if possible; be sure to include a negative sign for the longitude of a well in the Western Hemisphere and a negative sign for the latitude of a well in the Southern Hemisphere.

Enter the **WELL CLASS,** i.e., the class of injection well as defined in 40 CFR 144.6.

TIMING OF THE ACTION: Check ***Notice prior to work*** if the activity has not yet occurred (i.e., is planned). Check ***Report after work*** if the activity described has already occurred. As appropriate, include the date the activity is expected to start or the date the activity was completed. (Note this may not be available, e.g., for a plugging plan submitted with a permit application.)

TYPE OF ACTION: Check the appropriate box to describe the kind of activity being reported. Check ***Well Rework*** for work that was/will be performed on the well after it has already been in operation as an injection well. Check ***Plugging and Abandonment*** to report on plans for or descriptions of final closure/plugging after use as an injection well. Check ***Conversion to a Non-Injection Well*** if the well is to be converted to something other than an injection well.

Provide a **NARRATIVE DESCRIPTION** of the work planned to be performed, or that was performed. The narrative should include a description of the main procedures planned or that occurred during the work activity. A service company report, daily report, or similar document may be attached if it includes all the requested information and is clear and legible.

For well reworks, include the following information: The reason for the well rework; depths of activity; type of activity; changes to injection well configuration, well casing, or cement behind casing; any plug added to the well and its depth; any newly drilled interval and its depth; method(s) to demonstrate that the well has mechanical integrity (as applicable); and any deviations from the approved rework plan (as applicable).

For a well plugging plan, include the following information: Reason for the well plugging; number of plugs placed, and their depths; materials used as plugs (e.g., cast iron bridge plug, cement, cement retainer); method to set plugs; and wait-on-cement times, if any. Also provide one or more cost estimates from an independent firm in the business of plugging and abandoning wells to plug the well as described in the plan.

For well plugging affidavit, include the following information: Reason for the well plugging; number of plugs placed, and their depths; materials used as plugs (e.g., cast iron bridge plug, cement, cement retainer); method to set plugs; wait-on-cement times, if any; and any deviations from the approved plugging plan (if applicable).

For conversion to a non-injection well, include the following information: Depths of activity; type of activity; changes to injection well configuration, well casing, or cement behind casing; any plug added to the well and its depth; any newly drilled interval and its depth; depths of new perforations; and method(s) to demonstrate that the well has mechanical integrity (as applicable).

For all of the above activities, include a well sketch depicting the work, results of well tests/logging performed, service company tickets, and any other available information demonstrating how the work was/is to be performed. Also, specify whether depths are below ground surface, relative to Kelly bushing, etc.

CERTIFICATION: This form must be signed and dated by either: a responsible corporate officer for a corporation, by a general partner for a partnership, by the proprietor of a sole proprietorship, or by a principal executive or ranking elected official for a public agency.

PAPERWORK REDUCTION ACT NOTICE: The public reporting and recordkeeping burden for this collection of information is estimated to average between 6.0 and 7.9 hours per response, depending on the injection well class. Burden means the total time, effort, or financial resource expended by persons to generate, maintain, retain, or disclose or provide information to or for a Federal Agency. This includes the time needed to review instructions; develop, acquire, install, and utilize technology and systems for the purposes of collecting, validating, and verifying information, processing and maintaining information, and disclosing and providing information; adjust the existing ways to comply with any previously applicable instructions and requirements; train personnel to be able to respond to the collection of information; search data sources; complete and review the collection of information; and, transmit or otherwise disclose the information. An agency may not conduct or sponsor, and a person is not required to respond to, a collection of information unless it displays a currently valid OMB control number. Send comments on the Agency's need for this information, the accuracy of the provided burden estimates, and any suggested methods for minimizing respondent burden, including the use of automated collection techniques to Director, Collection Strategies Division, U.S. Environmental Protection Agency (2822), 1200 Pennsylvania Ave., NW., Washington, D.C. 20460. Include the OMB control number in any correspondence. Do not send the completed forms to this address.

AS-BUILT COREHOLE 420S

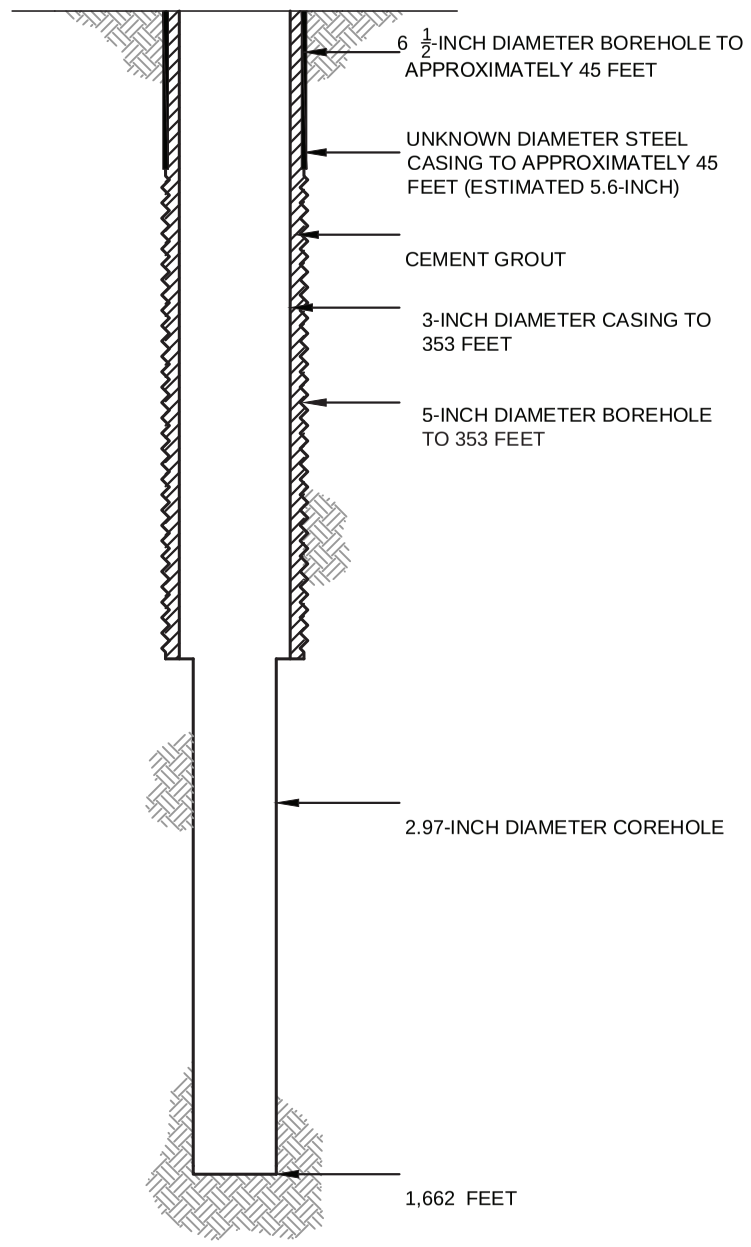

PROPOSED PLUGGING AND ABANDONMENT COREHOLE 420S

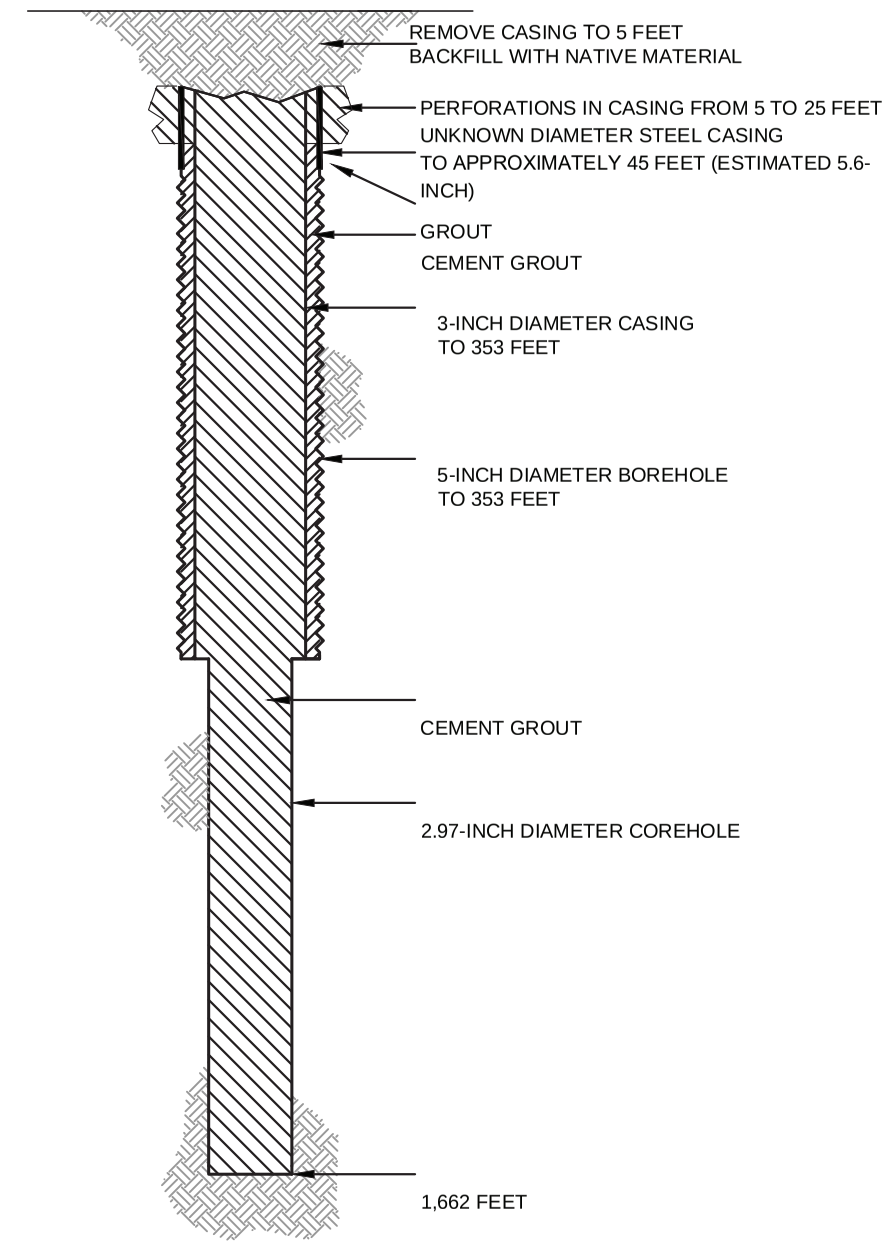

HALEY ALDRICH

FLORENCE COPPER, INC.
FLORENCE, ARIZONA

COREHOLE 420S DIAGRAM

FLORENCE COPPER INC.

NOT TO SCALE
SEPTEMBER 2019

FIGURE 1

MOBINI, GITA Printed: 4/21/2017 12:00 PM Layout: ABANDON (2)
G:\PROJECTS\CURIS RESOURCES\38706-CURIS FEASIBILITY\DRAWINGS\EPA\WELL ABANDON\415S_ABANDON.DWG

OMB No. 2040-0042 Approval Expires 4/30/2022

United States Environmental Protection Agency

WELL REWORK RECORD, PLUGGING AND ABANDONMENT PLAN, OR PLUGGING AND ABANDONMENT AFFIDAVIT

Name and Address, Phone Number and/or Email of Permittee

Florence Copper Project
1575 W Hunt Hwy,
Florence, AZ 85132

Permit or EPA ID Number	API Number	Full Well Name
R9UIC-AZ3-FY11-1		422MF

State	County
Arizona	Pinal

Locate well in two directions from nearest lines of quarter section and drilling unit

Latitude 33.04737054

Longitude -111.4297619

Surface Location

SW **1/4 of** SE **1/4 of Section** 28 **Township** 4S **Range** 9E

_____ **ft. from (N/S)** _____ **Line of quarter section**

_____ **ft. from (E/W)** _____ **Line of quarter section.**

Well Class	Timing of Action (pick one)	Type of Action (pick one)
☐ Class I ☐ Class II ☑ Class III ☐ Class V	☑ Notice Prior to Work Date Expected to Commence March 2021 ☐ Report After Work Date Work Ended	☐ Well Rework ☑ Plugging and Abandonment ☐ Conversion to a Non-Injection Well

Provide a narrative description of the work planned to be performed, or that was performed. Use additional pages as necessary. See instructions.

A workover rig capable of performing the required abandonment operations at the required depths will be moved in and set up over the core hole. The core hole will be inspected to determine the depth to which the hole remains open and if any obstructions are present in the core hole; the presence and condition of any existing collar will also be documented. If necessary, the core hole will be cleaned out to a depth of at least 100 feet below the bedrock-LBFU contact to enable placement of cement seals.

If collar is present, an attempt will be made to remove it. If removal of the collar is not feasible, it will be left in the hole and perforated as needed to allow an annular seal to be placed to a depth of at least 25 feet bgs. In areas of agricultural use, the surface casing will be cut at least 5 feet bgs and removed.

If the collar cannot be removed, it will be perforated from at least 20 feet below the bedrock-LBFU contact to at least 20 feet above the contact; from at least 20 feet below the base of the MFGU to at least 20 feet above the top of the MFGU; and from at least 25 feet bgs to 5 feet bgs.

A tremie pipe will be used to place Type V cement in the open core hole from the bottom of the core hole to the top of the core hole. Cement retainers, as described above, will be used to force cement grout into the annulus and behind perforated intervals, as necessary.

If the hole has been obstructed, as much cement as possible will be placed from 100 feet below the LBFU-bedrock contact to the top of the core hole.

The volume of Type V cement will be recorded and will not be less than the estimated volume of material required to fill each interval. All cement grout will consist of Type V cement, or equivalent approved in accordance with the UIC Permit.

Certification

I certify under the penalty of law that I have personally examined and am familiar with the information submitted in this document and all attachments and that, based on my inquiry of those individuals immediately responsible for obtaining the information, I believe that the information is true, accurate, and complete. I am aware that there are significant penalties for submitting false information, including the possibliity of fine and imprisonment. (Ref. 40 CFR § 144.32)

Name and Official Title *(Please type or print)*	Signature	Date Signed
Dan Johnson, VP - General Manager		10/3/2019

INSTRUCTIONS FOR FORM 7520-19

This form replaces forms 7520-12 and 7520-14. Use this form only when work is planned or has occurred that affects the well's construction or operation as an injection well, including work on the casing, tubing or packer (or for shallow Class V wells, the subsurface fluid emplacement network). Use one form per injection well. While reports or other information developed by contractors or service companies may be attached, this form must be signed by a responsible entity as described at 40 CFR 144.32. Note: operators closing Class V wells should use Form 7520-17.

NAME, ADDRESS, PHONE AND/OR EMAIL OF PERMITTEE: Enter the name and street address, city/town, state, and ZIP code of the permittee. Also provide an email address (if available) and/or a phone number.

PERMIT OR EPA ID NUMBER: Enter the well identification number or permit number assigned to the well by the EPA or the permitting authority.

API NUMBER: Enter the number assigned by the local jurisdiction (usually a State Oil and Gas Agency) using the American Petroleum Institute standard numbering system.

FULL WELL NAME: Enter the full name of the well or project.

Enter the **STATE** and **COUNTY** where the well is located. For States that do not have counties, use the name of that State's equivalent jurisdiction at a more local level.

WELL LOCATION: Fill in the complete township, range, and section to the nearest quarter-quarter section. A township is north or south of the baseline, and a range is east or west of the principal meridian (e.g., T12N, R34W). Also include the distance, in feet, from the nearest north or south line and nearest east or west line of the quarter-section. Also, enter the **latitude** and **longitude** of the well in decimal degrees, to five or six places if possible; be sure to include a negative sign for the longitude of a well in the Western Hemisphere and a negative sign for the latitude of a well in the Southern Hemisphere.

Enter the **WELL CLASS,** i.e., the class of injection well as defined in 40 CFR 144.6.

TIMING OF THE ACTION: Check ***Notice prior to work*** if the activity has not yet occurred (i.e., is planned). Check ***Report after work*** if the activity described has already occurred. As appropriate, include the date the activity is expected to start or the date the activity was completed. (Note this may not be available, e.g., for a plugging plan submitted with a permit application.)

TYPE OF ACTION: Check the appropriate box to describe the kind of activity being reported. Check ***Well Rework*** for work that was/will be performed on the well after it has already been in operation as an injection well. Check ***Plugging and Abandonment*** to report on plans for or descriptions of final closure/plugging after use as an injection well. Check ***Conversion to a Non-Injection Well*** if the well is to be converted to something other than an injection well.

Provide a **NARRATIVE DESCRIPTION** of the work planned to be performed, or that was performed. The narrative should include a description of the main procedures planned or that occurred during the work activity. A service company report, daily report, or similar document may be attached if it includes all the requested information and is clear and legible.

For well reworks, include the following information: The reason for the well rework; depths of activity; type of activity; changes to injection well configuration, well casing, or cement behind casing; any plug added to the well and its depth; any newly drilled interval and its depth; method(s) to demonstrate that the well has mechanical integrity (as applicable); and any deviations from the approved rework plan (as applicable).

For a well plugging plan, include the following information: Reason for the well plugging; number of plugs placed, and their depths; materials used as plugs (e.g., cast iron bridge plug, cement, cement retainer); method to set plugs; and wait-on-cement times, if any. Also provide one or more cost estimates from an independent firm in the business of plugging and abandoning wells to plug the well as described in the plan.

For well plugging affidavit, include the following information: Reason for the well plugging; number of plugs placed, and their depths; materials used as plugs (e.g., cast iron bridge plug, cement, cement retainer); method to set plugs; wait-on-cement times, if any; and any deviations from the approved plugging plan (if applicable).

For conversion to a non-injection well, include the following information: Depths of activity; type of activity; changes to injection well configuration, well casing, or cement behind casing; any plug added to the well and its depth; any newly drilled interval and its depth; depths of new perforations; and method(s) to demonstrate that the well has mechanical integrity (as applicable).

For all of the above activities, include a well sketch depicting the work, results of well tests/logging performed, service company tickets, and any other available information demonstrating how the work was/is to be performed. Also, specify whether depths are below ground surface, relative to Kelly bushing, etc.

CERTIFICATION: This form must be signed and dated by either: a responsible corporate officer for a corporation, by a general partner for a partnership, by the proprietor of a sole proprietorship, or by a principal executive or ranking elected official for a public agency.

PAPERWORK REDUCTION ACT NOTICE: The public reporting and recordkeeping burden for this collection of information is estimated to average between 6.0 and 7.9 hours per response, depending on the injection well class. Burden means the total time, effort, or financial resource expended by persons to generate, maintain, retain, or disclose or provide information to or for a Federal Agency. This includes the time needed to review instructions; develop, acquire, install, and utilize technology and systems for the purposes of collecting, validating, and verifying information, processing and maintaining information, and disclosing and providing information; adjust the existing ways to comply with any previously applicable instructions and requirements; train personnel to be able to respond to the collection of information; search data sources; complete and review the collection of information; and, transmit or otherwise disclose the information. An agency may not conduct or sponsor, and a person is not required to respond to, a collection of information unless it displays a currently valid OMB control number. Send comments on the Agency's need for this information, the accuracy of the provided burden estimates, and any suggested methods for minimizing respondent burden, including the use of automated collection techniques to Director, Collection Strategies Division, U.S. Environmental Protection Agency (2822), 1200 Pennsylvania Ave., NW., Washington, D.C. 20460. Include the OMB control number in any correspondence. Do not send the completed forms to this address.

AS-BUILT COREHOLE 422MF

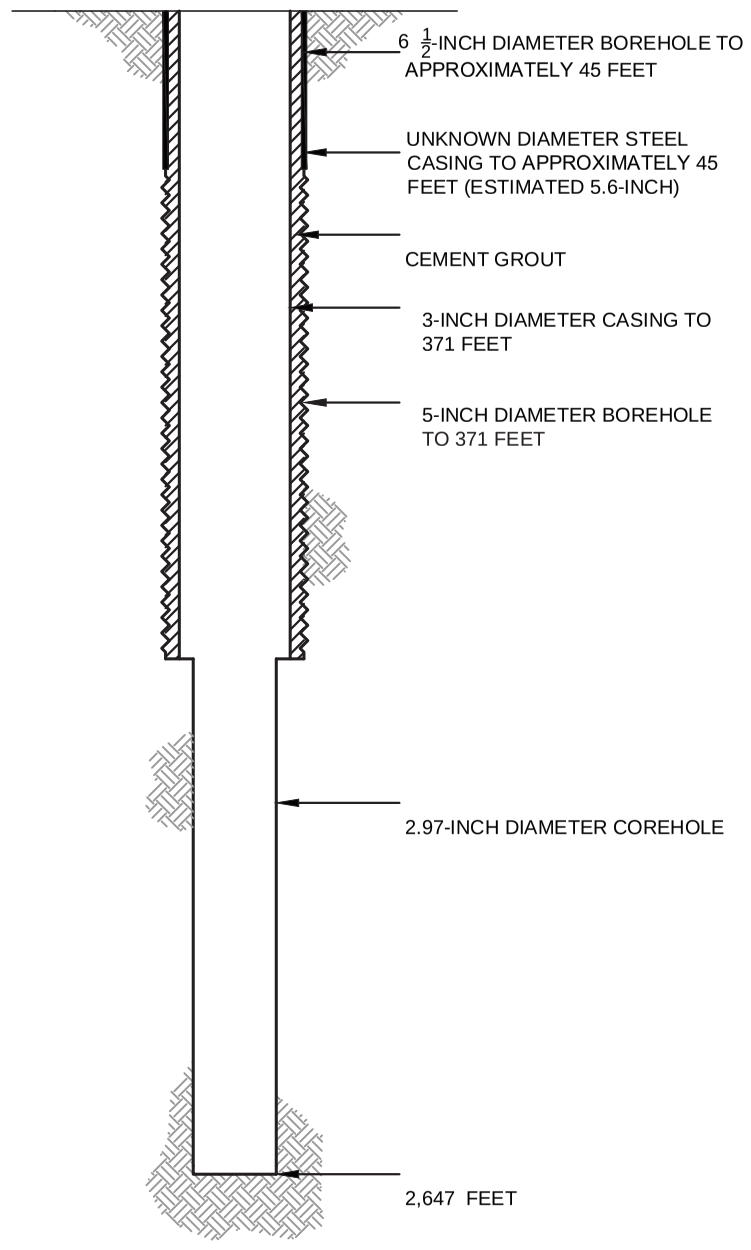

PROPOSED PLUGGING AND ABANDONMENT COREHOLE 422MF

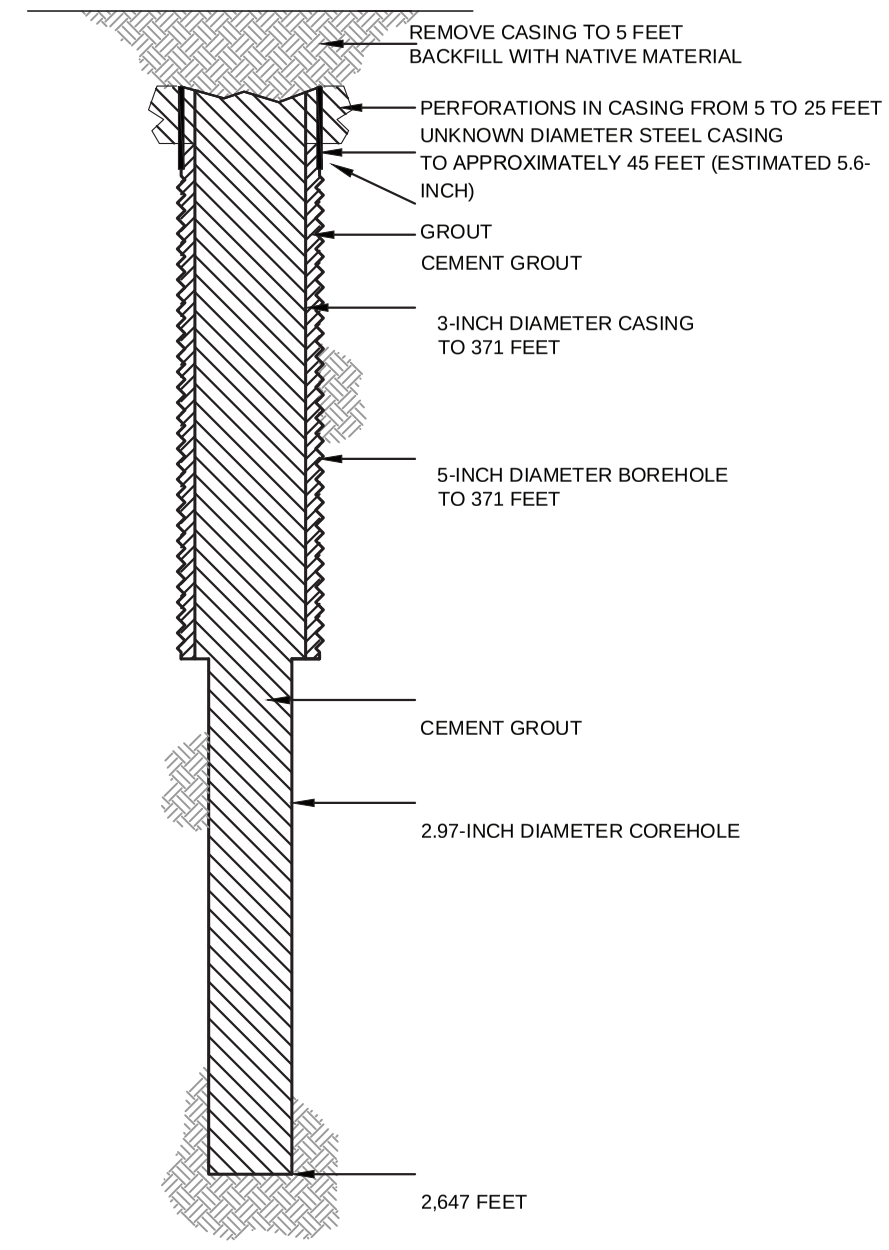

HALEY ALDRICH

FLORENCE COPPER, INC.
FLORENCE, ARIZONA

COREHOLE 422MF DIAGRAM

FLORENCE COPPER INC.

NOT TO SCALE
SEPTEMBER 2019

FIGURE 1

MOBINI, GITA Printed: 4/21/2017 12:00 PM Layout: ABANDON (2)
G:\PROJECTS\CURIS RESOURCES\38706-CURIS FEASIBILITY\DRAWINGS\EPA\WELL ABANDON\415S_ABANDON.DWG

OMB No. 2040-0042 Approval Expires 4/30/2022

United States Environmental Protection Agency

WELL REWORK RECORD, PLUGGING AND ABANDONMENT PLAN, OR PLUGGING AND ABANDONMENT AFFIDAVIT

Name and Address, Phone Number and/or Email of Permittee

Florence Copper Project
1575 W Hunt Hwy,
Florence, AZ 85132

Permit or EPA ID Number	API Number	Full Well Name
R9UIC-AZ3-FY11-1		431MF

State	County
Arizona	Pinal

Locate well in two directions from nearest lines of quarter section and drilling unit

Latitude 33.0467707

Longitude -111.4285414

Surface Location

SW **1/4 of** SE **1/4 of Section** 28 **Township** 4S **Range** 9E

_____ **ft. from (N/S)** _____ **Line of quarter section**

_____ **ft. from (E/W)** _____ **Line of quarter section.**

Well Class	Timing of Action (pick one)	Type of Action (pick one)
☐ Class I ☐ Class II ☑ Class III ☐ Class V	☑ Notice Prior to Work Date Expected to Commence March 2021 ☐ Report After Work Date Work Ended	☐ Well Rework ☑ Plugging and Abandonment ☐ Conversion to a Non-Injection Well

Provide a narrative description of the work planned to be performed, or that was performed. Use additional pages as necessary. See instructions.

A workover rig capable of performing the required abandonment operations at the required depths will be moved in and set up over the core hole. The core hole will be inspected to determine the depth to which the hole remains open and if any obstructions are present in the core hole; the presence and condition of any existing collar will also be documented. If necessary, the core hole will be cleaned out to a depth of at least 100 feet below the bedrock-LBFU contact to enable placement of cement seals.

If collar is present, an attempt will be made to remove it. If removal of the collar is not feasible, it will be left in the hole and perforated as needed to allow an annular seal to be placed to a depth of at least 25 feet bgs. In areas of agricultural use, the surface casing will be cut at least 5 feet bgs and removed.

If the collar cannot be removed, it will be perforated from at least 20 feet below the bedrock-LBFU contact to at least 20 feet above the contact; from at least 20 feet below the base of the MFGU to at least 20 feet above the top of the MFGU; and from at least 25 feet bgs to 5 feet bgs.

A tremie pipe will be used to place Type V cement in the open core hole from the bottom of the core hole to the top of the core hole. Cement retainers, as described above, will be used to force cement grout into the annulus and behind perforated intervals, as necessary.

If the hole has been obstructed, as much cement as possible will be placed from 100 feet below the LBFU-bedrock contact to the top of the core hole.

The volume of Type V cement will be recorded and will not be less than the estimated volume of material required to fill each interval. All cement grout will consist of Type V cement, or equivalent approved in accordance with the UIC Permit.

Certification

I certify under the penalty of law that I have personally examined and am familiar with the information submitted in this document and all attachments and that, based on my inquiry of those individuals immediately responsible for obtaining the information, I believe that the information is true, accurate, and complete. I am aware that there are significant penalties for submitting false information, including the possibliity of fine and imprisonment. (Ref. 40 CFR § 144.32)

Name and Official Title *(Please type or print)*	Signature	Date Signed
Dan Johnson, VP - General Manager		10/3/2019

INSTRUCTIONS FOR FORM 7520-19

This form replaces forms 7520-12 and 7520-14. Use this form only when work is planned or has occurred that affects the well's construction or operation as an injection well, including work on the casing, tubing or packer (or for shallow Class V wells, the subsurface fluid emplacement network). Use one form per injection well. While reports or other information developed by contractors or service companies may be attached, this form must be signed by a responsible entity as described at 40 CFR 144.32. Note: operators closing Class V wells should use Form 7520-17.

NAME, ADDRESS, PHONE AND/OR EMAIL OF PERMITTEE: Enter the name and street address, city/town, state, and ZIP code of the permittee. Also provide an email address (if available) and/or a phone number.

PERMIT OR EPA ID NUMBER: Enter the well identification number or permit number assigned to the well by the EPA or the permitting authority.

API NUMBER: Enter the number assigned by the local jurisdiction (usually a State Oil and Gas Agency) using the American Petroleum Institute standard numbering system.

FULL WELL NAME: Enter the full name of the well or project.

Enter the **STATE** and **COUNTY** where the well is located. For States that do not have counties, use the name of that State's equivalent jurisdiction at a more local level.

WELL LOCATION: Fill in the complete township, range, and section to the nearest quarter-quarter section. A township is north or south of the baseline, and a range is east or west of the principal meridian (e.g., T12N, R34W). Also include the distance, in feet, from the nearest north or south line and nearest east or west line of the quarter-section. Also, enter the **latitude** and **longitude** of the well in decimal degrees, to five or six places if possible; be sure to include a negative sign for the longitude of a well in the Western Hemisphere and a negative sign for the latitude of a well in the Southern Hemisphere.

Enter the **WELL CLASS,** i.e., the class of injection well as defined in 40 CFR 144.6.

TIMING OF THE ACTION: Check ***Notice prior to work*** if the activity has not yet occurred (i.e., is planned). Check ***Report after work*** if the activity described has already occurred. As appropriate, include the date the activity is expected to start or the date the activity was completed. (Note this may not be available, e.g., for a plugging plan submitted with a permit application.)

TYPE OF ACTION: Check the appropriate box to describe the kind of activity being reported. Check ***Well Rework*** for work that was/will be performed on the well after it has already been in operation as an injection well. Check ***Plugging and Abandonment*** to report on plans for or descriptions of final closure/plugging after use as an injection well. Check ***Conversion to a Non-Injection Well*** if the well is to be converted to something other than an injection well.

Provide a **NARRATIVE DESCRIPTION** of the work planned to be performed, or that was performed. The narrative should include a description of the main procedures planned or that occurred during the work activity. A service company report, daily report, or similar document may be attached if it includes all the requested information and is clear and legible.

For well reworks, include the following information: The reason for the well rework; depths of activity; type of activity; changes to injection well configuration, well casing, or cement behind casing; any plug added to the well and its depth; any newly drilled interval and its depth; method(s) to demonstrate that the well has mechanical integrity (as applicable); and any deviations from the approved rework plan (as applicable).

For a well plugging plan, include the following information: Reason for the well plugging; number of plugs placed, and their depths; materials used as plugs (e.g., cast iron bridge plug, cement, cement retainer); method to set plugs; and wait-on-cement times, if any. Also provide one or more cost estimates from an independent firm in the business of plugging and abandoning wells to plug the well as described in the plan.

For well plugging affidavit, include the following information: Reason for the well plugging; number of plugs placed, and their depths; materials used as plugs (e.g., cast iron bridge plug, cement, cement retainer); method to set plugs; wait-on-cement times, if any; and any deviations from the approved plugging plan (if applicable).

For conversion to a non-injection well, include the following information: Depths of activity; type of activity; changes to injection well configuration, well casing, or cement behind casing; any plug added to the well and its depth; any newly drilled interval and its depth; depths of new perforations; and method(s) to demonstrate that the well has mechanical integrity (as applicable).

For all of the above activities, include a well sketch depicting the work, results of well tests/logging performed, service company tickets, and any other available information demonstrating how the work was/is to be performed. Also, specify whether depths are below ground surface, relative to Kelly bushing, etc.

CERTIFICATION: This form must be signed and dated by either: a responsible corporate officer for a corporation, by a general partner for a partnership, by the proprietor of a sole proprietorship, or by a principal executive or ranking elected official for a public agency.

PAPERWORK REDUCTION ACT NOTICE: The public reporting and recordkeeping burden for this collection of information is estimated to average between 6.0 and 7.9 hours per response, depending on the injection well class. Burden means the total time, effort, or financial resource expended by persons to generate, maintain, retain, or disclose or provide information to or for a Federal Agency. This includes the time needed to review instructions; develop, acquire, install, and utilize technology and systems for the purposes of collecting, validating, and verifying information, processing and maintaining information, and disclosing and providing information; adjust the existing ways to comply with any previously applicable instructions and requirements; train personnel to be able to respond to the collection of information; search data sources; complete and review the collection of information; and, transmit or otherwise disclose the information. An agency may not conduct or sponsor, and a person is not required to respond to, a collection of information unless it displays a currently valid OMB control number. Send comments on the Agency's need for this information, the accuracy of the provided burden estimates, and any suggested methods for minimizing respondent burden, including the use of automated collection techniques to Director, Collection Strategies Division, U.S. Environmental Protection Agency (2822), 1200 Pennsylvania Ave., NW., Washington, D.C. 20460. Include the OMB control number in any correspondence. Do not send the completed forms to this address.

AS-BUILT COREHOLE 431MF

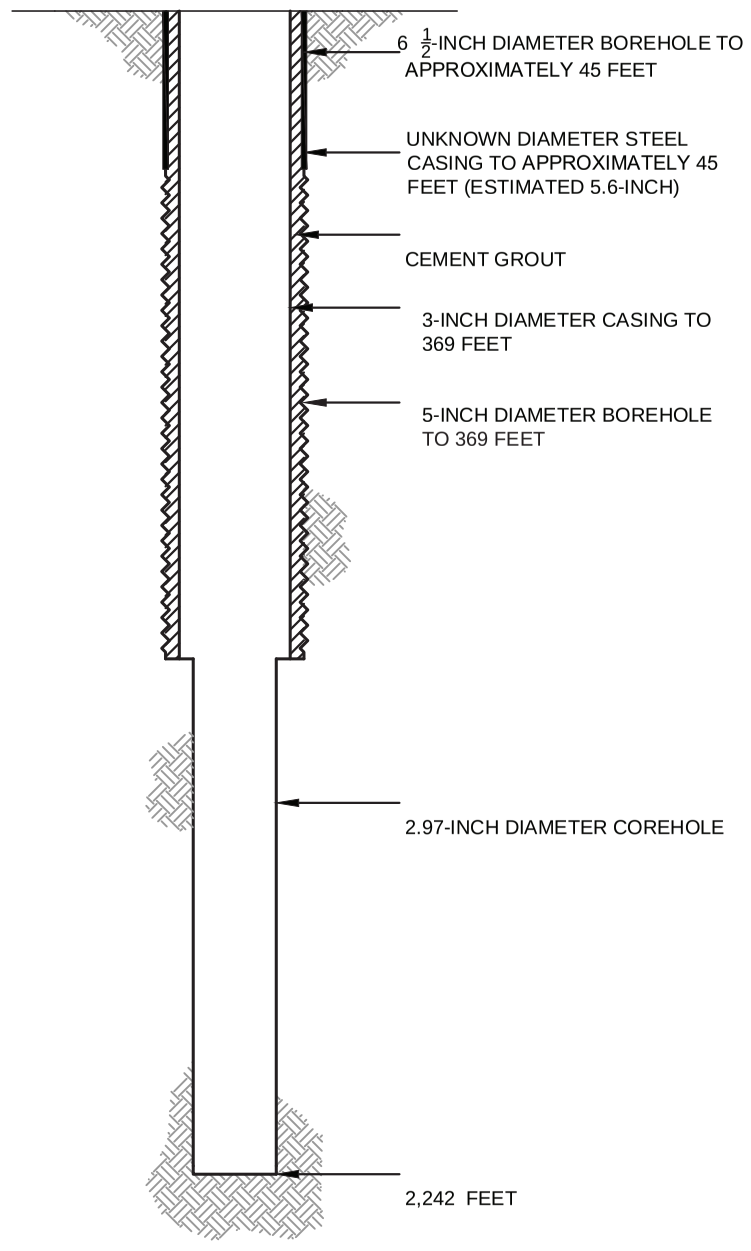

PROPOSED PLUGGING AND ABANDONMENT COREHOLE 431MF

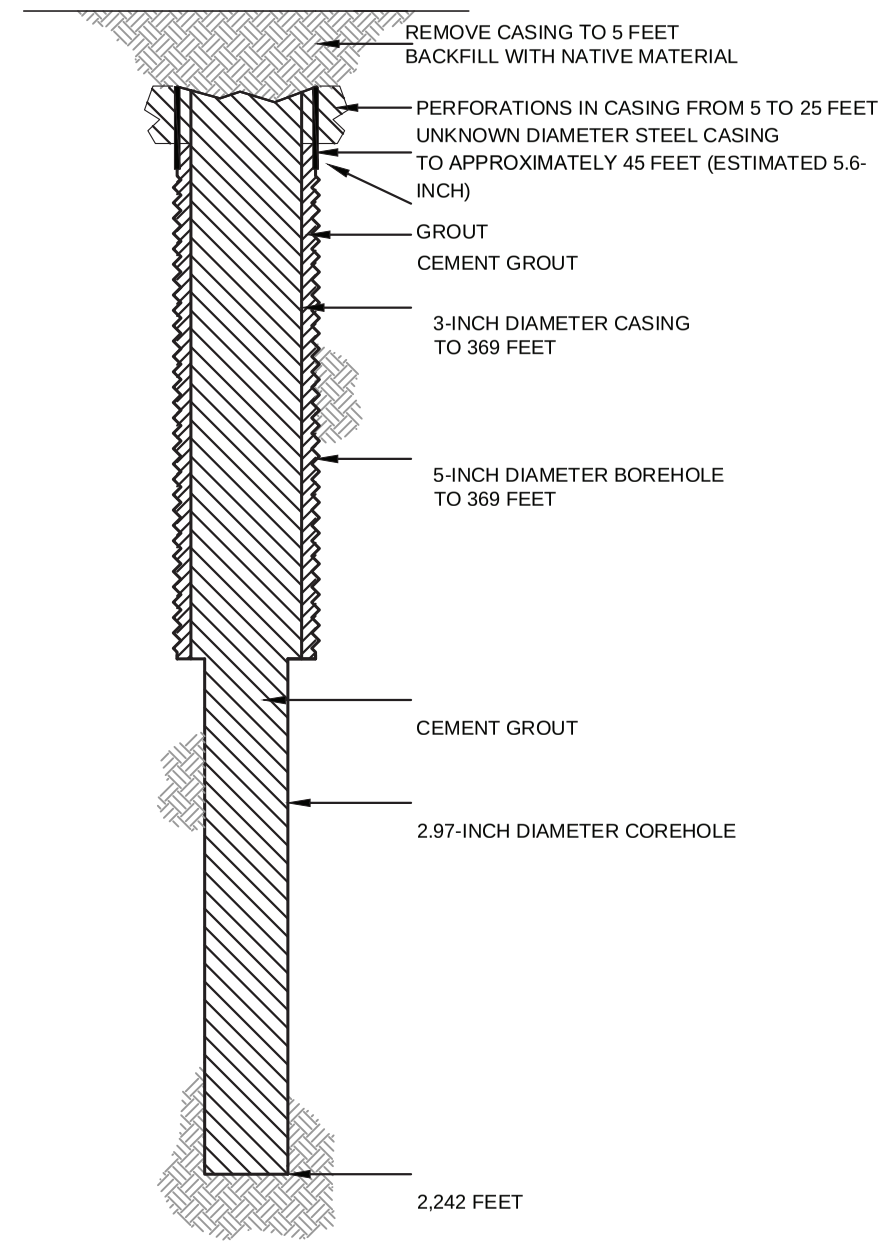

HALEY ALDRICH

FLORENCE COPPER, INC.
FLORENCE, ARIZONA

COREHOLE 431MF DIAGRAM

FLORENCE COPPER INC.

NOT TO SCALE
SEPTEMBER 2019

FIGURE 1

MOBINI, GITA Printed: 4/21/2017 12:00 PM Layout: ABANDON (2)
G:\PROJECTS\CURIS RESOURCES\38706-CURIS FEASIBILITY\DRAWINGS\EPA\WELL ABANDON\415S_ABANDON.DWG

OMB No. 2040-0042 Approval Expires 4/30/2022

United States Environmental Protection Agency

EPA

WELL REWORK RECORD, PLUGGING AND ABANDONMENT PLAN, OR PLUGGING AND ABANDONMENT AFFIDAVIT

Name and Address, Phone Number and/or Email of Permittee

Florence Copper Project
1575 W Hunt Hwy,
Florence, AZ 85132

Permit or EPA ID Number	API Number	Full Well Name
R9UIC-AZ3-FY11-1		432MF

State	County
Arizona	Pinal

Locate well in two directions from nearest lines of quarter section and drilling unit

Latitude 33.0467675

Longitude -111.4277256

Surface Location

SW **1/4 of** SE **1/4 of Section** 28 **Township** 4S **Range** 9E

_____ **ft. from (N/S)** _____ **Line of quarter section**

_____ **ft. from (E/W)** _____ **Line of quarter section.**

Well Class	Timing of Action (pick one)	Type of Action (pick one)
☐ Class I ☐ Class II ☑ Class III ☐ Class V	☑ Notice Prior to Work Date Expected to Commence March 2021 ☐ Report After Work Date Work Ended	☐ Well Rework ☑ Plugging and Abandonment ☐ Conversion to a Non-Injection Well

Provide a narrative description of the work planned to be performed, or that was performed. Use additional pages as necessary. See instructions.

A workover rig capable of performing the required abandonment operations at the required depths will be moved in and set up over the core hole. The core hole will be inspected to determine the depth to which the hole remains open and if any obstructions are present in the core hole; the presence and condition of any existing collar will also be documented. If necessary, the core hole will be cleaned out to a depth of at least 100 feet below the bedrock-LBFU contact to enable placement of cement seals.

If collar is present, an attempt will be made to remove it. If removal of the collar is not feasible, it will be left in the hole and perforated as needed to allow an annular seal to be placed to a depth of at least 25 feet bgs. In areas of agricultural use, the surface casing will be cut at least 5 feet bgs and removed.

If the collar cannot be removed, it will be perforated from at least 20 feet below the bedrock-LBFU contact to at least 20 feet above the contact; from at least 20 feet below the base of the MFGU to at least 20 feet above the top of the MFGU; and from at least 25 feet bgs to 5 feet bgs.

A tremie pipe will be used to place Type V cement in the open core hole from the bottom of the core hole to the top of the core hole. Cement retainers, as described above, will be used to force cement grout into the annulus and behind perforated intervals, as necessary.

If the hole has been obstructed, as much cement as possible will be placed from 100 feet below the LBFU-bedrock contact to the top of the core hole.

The volume of Type V cement will be recorded and will not be less than the estimated volume of material required to fill each interval. All cement grout will consist of Type V cement, or equivalent approved in accordance with the UIC Permit.

Certification

I certify under the penalty of law that I have personally examined and am familiar with the information submitted in this document and all attachments and that, based on my inquiry of those individuals immediately responsible for obtaining the information, I believe that the information is true, accurate, and complete. I am aware that there are significant penalties for submitting false information, including the possibliity of fine and imprisonment. (Ref. 40 CFR § 144.32)

Name and Official Title *(Please type or print)*	Signature	Date Signed
Dan Johnson, VP - General Manager		10/3/2019

INSTRUCTIONS FOR FORM 7520-19

This form replaces forms 7520-12 and 7520-14. Use this form only when work is planned or has occurred that affects the well's construction or operation as an injection well, including work on the casing, tubing or packer (or for shallow Class V wells, the subsurface fluid emplacement network). Use one form per injection well. While reports or other information developed by contractors or service companies may be attached, this form must be signed by a responsible entity as described at 40 CFR 144.32. Note: operators closing Class V wells should use Form 7520-17.

NAME, ADDRESS, PHONE AND/OR EMAIL OF PERMITTEE: Enter the name and street address, city/town, state, and ZIP code of the permittee. Also provide an email address (if available) and/or a phone number.

PERMIT OR EPA ID NUMBER: Enter the well identification number or permit number assigned to the well by the EPA or the permitting authority.

API NUMBER: Enter the number assigned by the local jurisdiction (usually a State Oil and Gas Agency) using the American Petroleum Institute standard numbering system.

FULL WELL NAME: Enter the full name of the well or project.

Enter the **STATE** and **COUNTY** where the well is located. For States that do not have counties, use the name of that State's equivalent jurisdiction at a more local level.

WELL LOCATION: Fill in the complete township, range, and section to the nearest quarter-quarter section. A township is north or south of the baseline, and a range is east or west of the principal meridian (e.g., T12N, R34W). Also include the distance, in feet, from the nearest north or south line and nearest east or west line of the quarter-section. Also, enter the **latitude** and **longitude** of the well in decimal degrees, to five or six places if possible; be sure to include a negative sign for the longitude of a well in the Western Hemisphere and a negative sign for the latitude of a well in the Southern Hemisphere.

Enter the **WELL CLASS,** i.e., the class of injection well as defined in 40 CFR 144.6.

TIMING OF THE ACTION: Check ***Notice prior to work*** if the activity has not yet occurred (i.e., is planned). Check ***Report after work*** if the activity described has already occurred. As appropriate, include the date the activity is expected to start or the date the activity was completed. (Note this may not be available, e.g., for a plugging plan submitted with a permit application.)

TYPE OF ACTION: Check the appropriate box to describe the kind of activity being reported. Check ***Well Rework*** for work that was/will be performed on the well after it has already been in operation as an injection well. Check ***Plugging and Abandonment*** to report on plans for or descriptions of final closure/plugging after use as an injection well. Check ***Conversion to a Non-Injection Well*** if the well is to be converted to something other than an injection well.

Provide a **NARRATIVE DESCRIPTION** of the work planned to be performed, or that was performed. The narrative should include a description of the main procedures planned or that occurred during the work activity. A service company report, daily report, or similar document may be attached if it includes all the requested information and is clear and legible.

For well reworks, include the following information: The reason for the well rework; depths of activity; type of activity; changes to injection well configuration, well casing, or cement behind casing; any plug added to the well and its depth; any newly drilled interval and its depth; method(s) to demonstrate that the well has mechanical integrity (as applicable); and any deviations from the approved rework plan (as applicable).

For a well plugging plan, include the following information: Reason for the well plugging; number of plugs placed, and their depths; materials used as plugs (e.g., cast iron bridge plug, cement, cement retainer); method to set plugs; and wait-on-cement times, if any. Also provide one or more cost estimates from an independent firm in the business of plugging and abandoning wells to plug the well as described in the plan.

For well plugging affidavit, include the following information: Reason for the well plugging; number of plugs placed, and their depths; materials used as plugs (e.g., cast iron bridge plug, cement, cement retainer); method to set plugs; wait-on-cement times, if any; and any deviations from the approved plugging plan (if applicable).

For conversion to a non-injection well, include the following information: Depths of activity; type of activity; changes to injection well configuration, well casing, or cement behind casing; any plug added to the well and its depth; any newly drilled interval and its depth; depths of new perforations; and method(s) to demonstrate that the well has mechanical integrity (as applicable).

For all of the above activities, include a well sketch depicting the work, results of well tests/logging performed, service company tickets, and any other available information demonstrating how the work was/is to be performed. Also, specify whether depths are below ground surface, relative to Kelly bushing, etc.

CERTIFICATION: This form must be signed and dated by either: a responsible corporate officer for a corporation, by a general partner for a partnership, by the proprietor of a sole proprietorship, or by a principal executive or ranking elected official for a public agency.

PAPERWORK REDUCTION ACT NOTICE: The public reporting and recordkeeping burden for this collection of information is estimated to average between 6.0 and 7.9 hours per response, depending on the injection well class. Burden means the total time, effort, or financial resource expended by persons to generate, maintain, retain, or disclose or provide information to or for a Federal Agency. This includes the time needed to review instructions; develop, acquire, install, and utilize technology and systems for the purposes of collecting, validating, and verifying information, processing and maintaining information, and disclosing and providing information; adjust the existing ways to comply with any previously applicable instructions and requirements; train personnel to be able to respond to the collection of information; search data sources; complete and review the collection of information; and, transmit or otherwise disclose the information. An agency may not conduct or sponsor, and a person is not required to respond to, a collection of information unless it displays a currently valid OMB control number. Send comments on the Agency's need for this information, the accuracy of the provided burden estimates, and any suggested methods for minimizing respondent burden, including the use of automated collection techniques to Director, Collection Strategies Division, U.S. Environmental Protection Agency (2822), 1200 Pennsylvania Ave., NW., Washington, D.C. 20460. Include the OMB control number in any correspondence. Do not send the completed forms to this address.

AS-BUILT COREHOLE 432MF

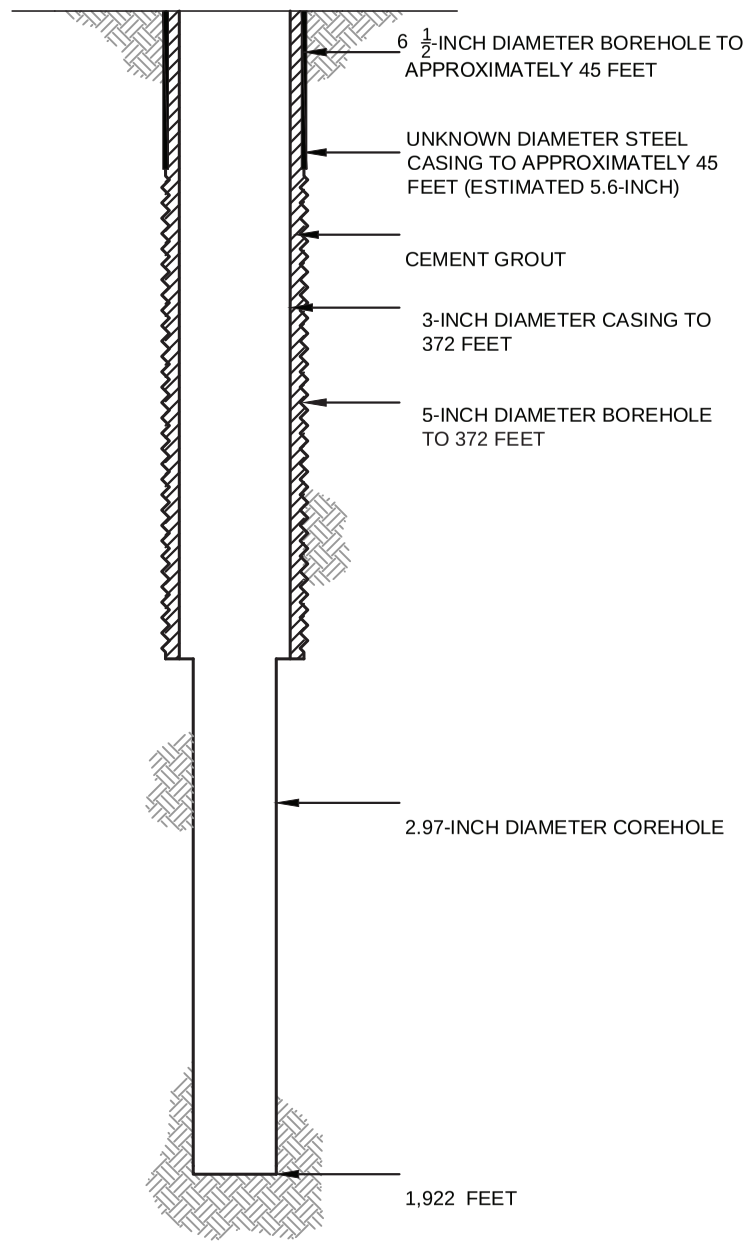

PROPOSED PLUGGING AND ABANDONMENT COREHOLE 432MF

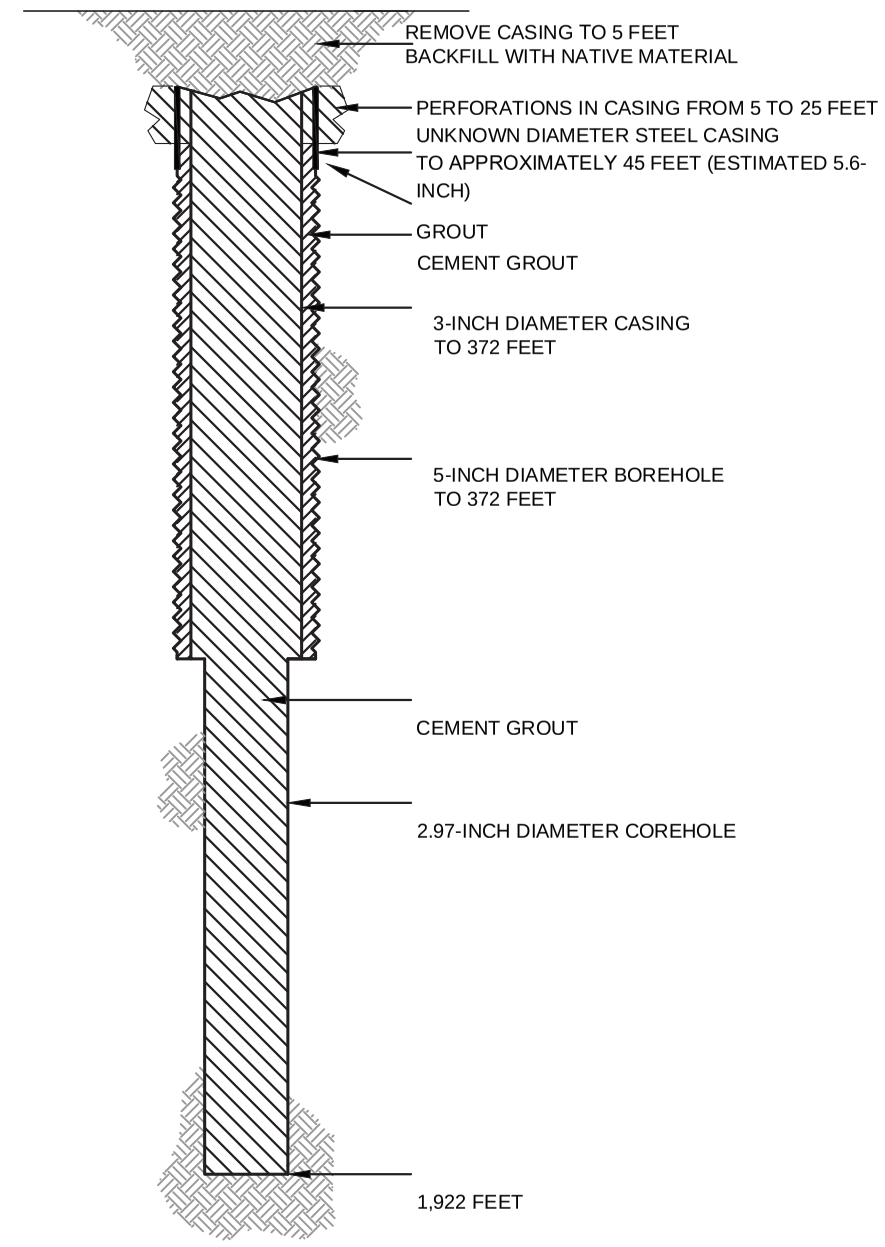

HALEY ALDRICH

FLORENCE COPPER, INC.
FLORENCE, ARIZONA

COREHOLE 432MF DIAGRAM

FLORENCE COPPER INC.

NOT TO SCALE
SEPTEMBER 2019

FIGURE 1

MOBINI, GITA Printed: 4/21/2017 12:00 PM Layout: ABANDON (2)
G:\PROJECTS\CURIS RESOURCES\38706-CURIS FEASIBILITY\DRAWINGS\EPA\WELL ABANDON\415S_ABANDON.DWG

OMB No. 2040-0042 Approval Expires 4/30/2022

United States Environmental Protection Agency

EPA

WELL REWORK RECORD, PLUGGING AND ABANDONMENT PLAN, OR PLUGGING AND ABANDONMENT AFFIDAVIT

Name and Address, Phone Number and/or Email of Permittee

Florence Copper Project
1575 W Hunt Hwy,
Florence, AZ 85132

Permit or EPA ID Number	API Number	Full Well Name
R9UIC-AZ3-FY11-1		433MF

State	County
Arizona	Pinal

Locate well in two directions from nearest lines of quarter section and drilling unit

Latitude 33.04499347

Surface Location

NE **1/4 of** NW **1/4 of Section** 33 **Township** 4S **Range** 9E

Longitude -111.4305909

_____ **ft. from (N/S)** _____ **Line of quarter section**

_____ **ft. from (E/W)** _____ **Line of quarter section.**

Well Class	Timing of Action (pick one)	Type of Action (pick one)
☐ Class I ☐ Class II ☑ Class III ☐ Class V	☑ Notice Prior to Work Date Expected to Commence March 2021 ☐ Report After Work Date Work Ended	☐ Well Rework ☑ Plugging and Abandonment ☐ Conversion to a Non-Injection Well

Provide a narrative description of the work planned to be performed, or that was performed. Use additional pages as necessary. See instructions.

A workover rig capable of performing the required abandonment operations at the required depths will be moved in and set up over the core hole. The core hole will be inspected to determine the depth to which the hole remains open and if any obstructions are present in the core hole; the presence and condition of any existing collar will also be documented. If necessary, the core hole will be cleaned out to a depth of at least 100 feet below the bedrock-LBFU contact to enable placement of cement seals.

If collar is present, an attempt will be made to remove it. If removal of the collar is not feasible, it will be left in the hole and perforated as needed to allow an annular seal to be placed to a depth of at least 25 feet bgs. In areas of agricultural use, the surface casing will be cut at least 5 feet bgs and removed.

If the collar cannot be removed, it will be perforated from at least 20 feet below the bedrock-LBFU contact to at least 20 feet above the contact; from at least 20 feet below the base of the MFGU to at least 20 feet above the top of the MFGU; and from at least 25 feet bgs to 5 feet bgs.

A tremie pipe will be used to place Type V cement in the open core hole from the bottom of the core hole to the top of the core hole. Cement retainers, as described above, will be used to force cement grout into the annulus and behind perforated intervals, as necessary.

If the hole has been obstructed, as much cement as possible will be placed from 100 feet below the LBFU-bedrock contact to the top of the core hole.

The volume of Type V cement will be recorded and will not be less than the estimated volume of material required to fill each interval. All cement grout will consist of Type V cement, or equivalent approved in accordance with the UIC Permit.

Certification

I certify under the penalty of law that I have personally examined and am familiar with the information submitted in this document and all attachments and that, based on my inquiry of those individuals immediately responsible for obtaining the information, I believe that the information is true, accurate, and complete. I am aware that there are significant penalties for submitting false information, including the possibliity of fine and imprisonment. (Ref. 40 CFR § 144.32)

Name and Official Title *(Please type or print)*	Signature	Date Signed
Dan Johnson, VP - General Manager		10/3/2019

INSTRUCTIONS FOR FORM 7520-19

This form replaces forms 7520-12 and 7520-14. Use this form only when work is planned or has occurred that affects the well's construction or operation as an injection well, including work on the casing, tubing or packer (or for shallow Class V wells, the subsurface fluid emplacement network). Use one form per injection well. While reports or other information developed by contractors or service companies may be attached, this form must be signed by a responsible entity as described at 40 CFR 144.32. Note: operators closing Class V wells should use Form 7520-17.

NAME, ADDRESS, PHONE AND/OR EMAIL OF PERMITTEE: Enter the name and street address, city/town, state, and ZIP code of the permittee. Also provide an email address (if available) and/or a phone number.

PERMIT OR EPA ID NUMBER: Enter the well identification number or permit number assigned to the well by the EPA or the permitting authority.

API NUMBER: Enter the number assigned by the local jurisdiction (usually a State Oil and Gas Agency) using the American Petroleum Institute standard numbering system.

FULL WELL NAME: Enter the full name of the well or project.

Enter the **STATE** and **COUNTY** where the well is located. For States that do not have counties, use the name of that State's equivalent jurisdiction at a more local level.

WELL LOCATION: Fill in the complete township, range, and section to the nearest quarter-quarter section. A township is north or south of the baseline, and a range is east or west of the principal meridian (e.g., T12N, R34W). Also include the distance, in feet, from the nearest north or south line and nearest east or west line of the quarter-section. Also, enter the **latitude** and **longitude** of the well in decimal degrees, to five or six places if possible; be sure to include a negative sign for the longitude of a well in the Western Hemisphere and a negative sign for the latitude of a well in the Southern Hemisphere.

Enter the **WELL CLASS,** i.e., the class of injection well as defined in 40 CFR 144.6.

TIMING OF THE ACTION: Check ***Notice prior to work*** if the activity has not yet occurred (i.e., is planned). Check ***Report after work*** if the activity described has already occurred. As appropriate, include the date the activity is expected to start or the date the activity was completed. (Note this may not be available, e.g., for a plugging plan submitted with a permit application.)

TYPE OF ACTION: Check the appropriate box to describe the kind of activity being reported. Check ***Well Rework*** for work that was/will be performed on the well after it has already been in operation as an injection well. Check ***Plugging and Abandonment*** to report on plans for or descriptions of final closure/plugging after use as an injection well. Check ***Conversion to a Non-Injection Well*** if the well is to be converted to something other than an injection well.

Provide a **NARRATIVE DESCRIPTION** of the work planned to be performed, or that was performed. The narrative should include a description of the main procedures planned or that occurred during the work activity. A service company report, daily report, or similar document may be attached if it includes all the requested information and is clear and legible.

For well reworks, include the following information: The reason for the well rework; depths of activity; type of activity; changes to injection well configuration, well casing, or cement behind casing; any plug added to the well and its depth; any newly drilled interval and its depth; method(s) to demonstrate that the well has mechanical integrity (as applicable); and any deviations from the approved rework plan (as applicable).

For a well plugging plan, include the following information: Reason for the well plugging; number of plugs placed, and their depths; materials used as plugs (e.g., cast iron bridge plug, cement, cement retainer); method to set plugs; and wait-on-cement times, if any. Also provide one or more cost estimates from an independent firm in the business of plugging and abandoning wells to plug the well as described in the plan.

For well plugging affidavit, include the following information: Reason for the well plugging; number of plugs placed, and their depths; materials used as plugs (e.g., cast iron bridge plug, cement, cement retainer); method to set plugs; wait-on-cement times, if any; and any deviations from the approved plugging plan (if applicable).

For conversion to a non-injection well, include the following information: Depths of activity; type of activity; changes to injection well configuration, well casing, or cement behind casing; any plug added to the well and its depth; any newly drilled interval and its depth; depths of new perforations; and method(s) to demonstrate that the well has mechanical integrity (as applicable).

For all of the above activities, include a well sketch depicting the work, results of well tests/logging performed, service company tickets, and any other available information demonstrating how the work was/is to be performed. Also, specify whether depths are below ground surface, relative to Kelly bushing, etc.

CERTIFICATION: This form must be signed and dated by either: a responsible corporate officer for a corporation, by a general partner for a partnership, by the proprietor of a sole proprietorship, or by a principal executive or ranking elected official for a public agency.

PAPERWORK REDUCTION ACT NOTICE: The public reporting and recordkeeping burden for this collection of information is estimated to average between 6.0 and 7.9 hours per response, depending on the injection well class. Burden means the total time, effort, or financial resource expended by persons to generate, maintain, retain, or disclose or provide information to or for a Federal Agency. This includes the time needed to review instructions; develop, acquire, install, and utilize technology and systems for the purposes of collecting, validating, and verifying information, processing and maintaining information, and disclosing and providing information; adjust the existing ways to comply with any previously applicable instructions and requirements; train personnel to be able to respond to the collection of information; search data sources; complete and review the collection of information; and, transmit or otherwise disclose the information. An agency may not conduct or sponsor, and a person is not required to respond to, a collection of information unless it displays a currently valid OMB control number. Send comments on the Agency's need for this information, the accuracy of the provided burden estimates, and any suggested methods for minimizing respondent burden, including the use of automated collection techniques to Director, Collection Strategies Division, U.S. Environmental Protection Agency (2822), 1200 Pennsylvania Ave., NW., Washington, D.C. 20460. Include the OMB control number in any correspondence. Do not send the completed forms to this address.

AS-BUILT COREHOLE 433MF

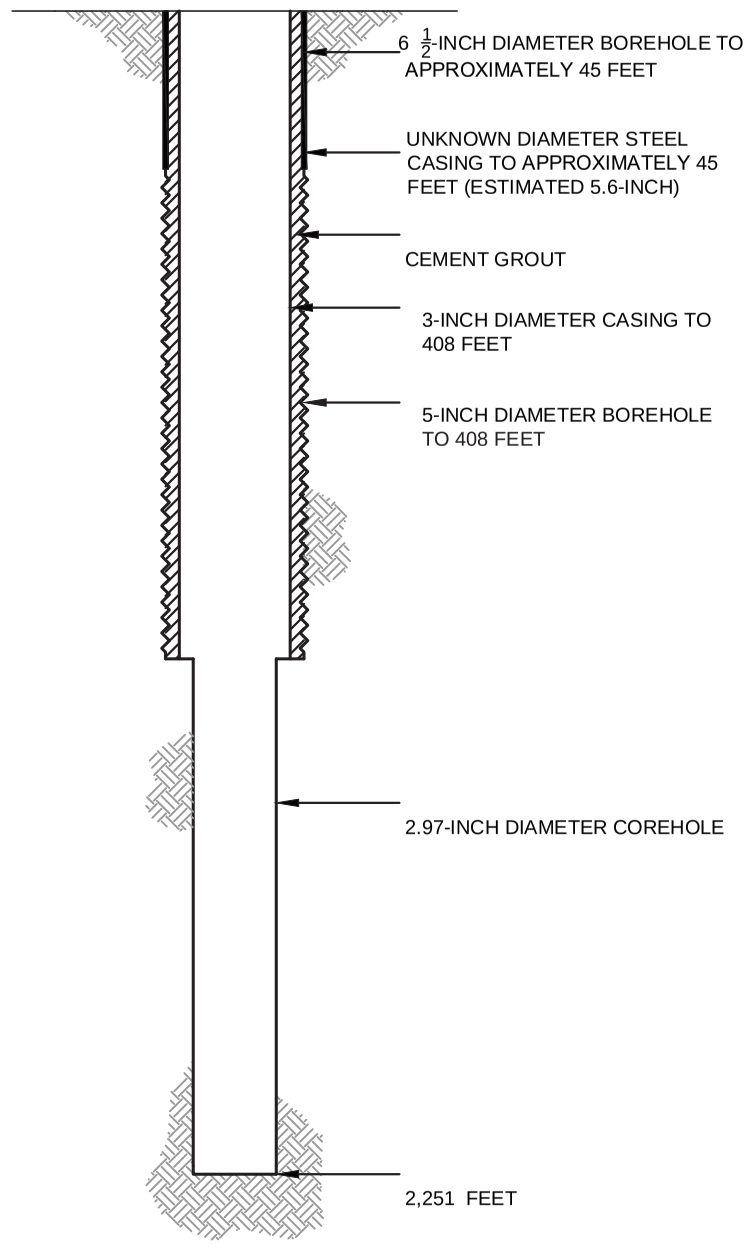

PROPOSED PLUGGING AND ABANDONMENT COREHOLE 433MF

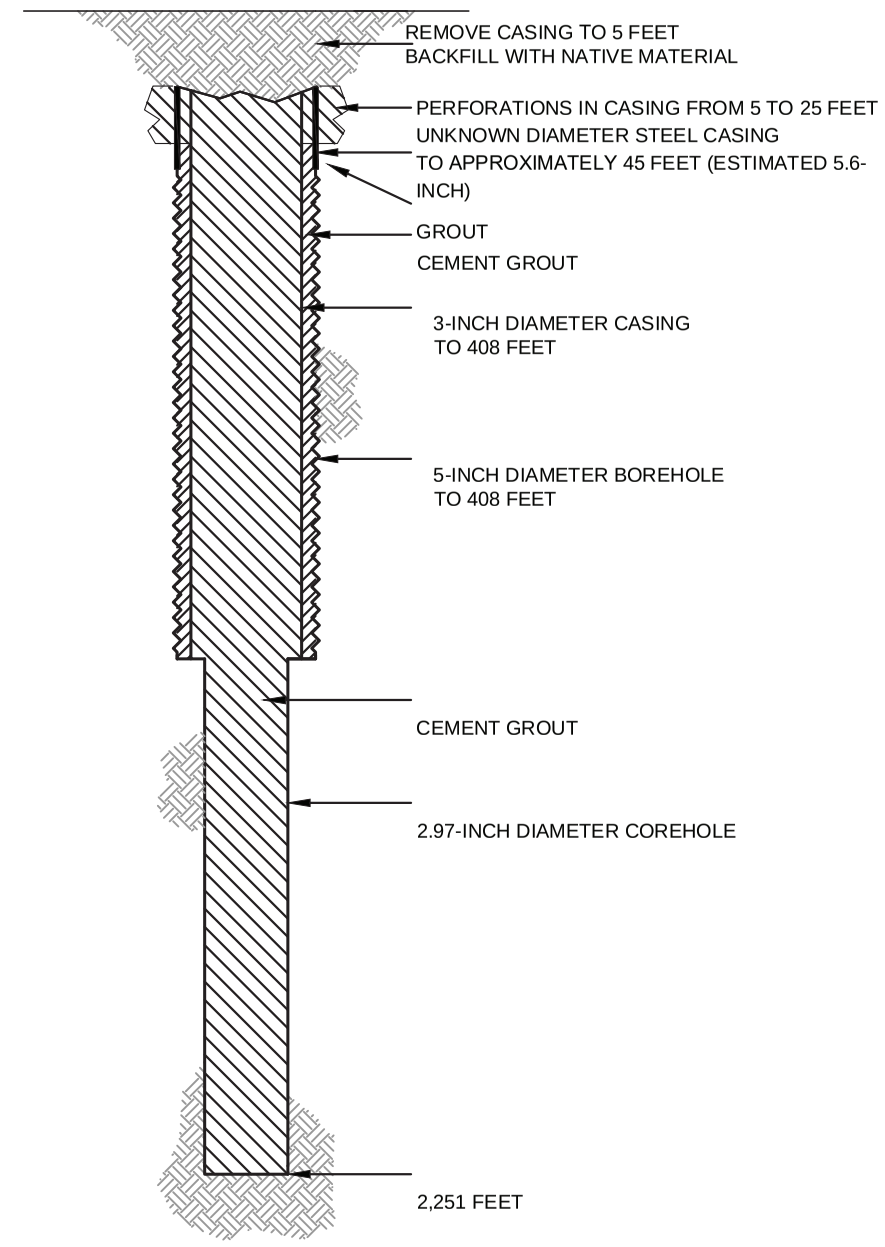

HALEY ALDRICH

FLORENCE COPPER, INC.
FLORENCE, ARIZONA

COREHOLE 433MF DIAGRAM

FLORENCE COPPER INC.

NOT TO SCALE
SEPTEMBER 2019

FIGURE 1

MOBINI, GITA Printed: 4/21/2017 12:00 PM Layout: ABANDON (2)
G:\PROJECTS\CURIS RESOURCES\38706-CURIS FEASIBILITY\DRAWINGS\EPA\WELL ABANDON\415S_ABANDON.DWG

OMB No. 2040-0042 Approval Expires 4/30/2022

United States Environmental Protection Agency

WELL REWORK RECORD, PLUGGING AND ABANDONMENT PLAN, OR PLUGGING AND ABANDONMENT AFFIDAVIT

Name and Address, Phone Number and/or Email of Permittee

Florence Copper Project
1575 W Hunt Hwy,
Florence, AZ 85132

Permit or EPA ID Number	API Number	Full Well Name
R9UIC-AZ3-FY11-1		435MF

State	County
Arizona	Pinal

Locate well in two directions from nearest lines of quarter section and drilling unit

Latitude 33.04617723

Longitude -111.4289526

Surface Location

SW **1/4 of** SE **1/4 of Section** 28 **Township** 4S **Range** 9E

_____ **ft. from (N/S)** _____ **Line of quarter section**

_____ **ft. from (E/W)** _____ **Line of quarter section.**

Well Class	Timing of Action (pick one)	Type of Action (pick one)
☐ Class I ☐ Class II ☑ Class III ☐ Class V	☑ Notice Prior to Work Date Expected to Commence March 2021 ☐ Report After Work Date Work Ended	☐ Well Rework ☑ Plugging and Abandonment ☐ Conversion to a Non-Injection Well

Provide a narrative description of the work planned to be performed, or that was performed. Use additional pages as necessary. See instructions.

A workover rig capable of performing the required abandonment operations at the required depths will be moved in and set up over the core hole. The core hole will be inspected to determine the depth to which the hole remains open and if any obstructions are present in the core hole; the presence and condition of any existing collar will also be documented. If necessary, the core hole will be cleaned out to a depth of at least 100 feet below the bedrock-LBFU contact to enable placement of cement seals.

If collar is present, an attempt will be made to remove it. If removal of the collar is not feasible, it will be left in the hole and perforated as needed to allow an annular seal to be placed to a depth of at least 25 feet bgs. In areas of agricultural use, the surface casing will be cut at least 5 feet bgs and removed.

If the collar cannot be removed, it will be perforated from at least 20 feet below the bedrock-LBFU contact to at least 20 feet above the contact; from at least 20 feet below the base of the MFGU to at least 20 feet above the top of the MFGU; and from at least 25 feet bgs to 5 feet bgs.

A tremie pipe will be used to place Type V cement in the open core hole from the bottom of the core hole to the top of the core hole. Cement retainers, as described above, will be used to force cement grout into the annulus and behind perforated intervals, as necessary.

If the hole has been obstructed, as much cement as possible will be placed from 100 feet below the LBFU-bedrock contact to the top of the core hole.

The volume of Type V cement will be recorded and will not be less than the estimated volume of material required to fill each interval. All cement grout will consist of Type V cement, or equivalent approved in accordance with the UIC Permit.

Certification

I certify under the penalty of law that I have personally examined and am familiar with the information submitted in this document and all attachments and that, based on my inquiry of those individuals immediately responsible for obtaining the information, I believe that the information is true, accurate, and complete. I am aware that there are significant penalties for submitting false information, including the possibliity of fine and imprisonment. (Ref. 40 CFR § 144.32)

Name and Official Title *(Please type or print)*	Signature	Date Signed
Dan Johnson, VP - General Manager		10/3/2019

INSTRUCTIONS FOR FORM 7520-19

This form replaces forms 7520-12 and 7520-14. Use this form only when work is planned or has occurred that affects the well's construction or operation as an injection well, including work on the casing, tubing or packer (or for shallow Class V wells, the subsurface fluid emplacement network). Use one form per injection well. While reports or other information developed by contractors or service companies may be attached, this form must be signed by a responsible entity as described at 40 CFR 144.32. Note: operators closing Class V wells should use Form 7520-17.

NAME, ADDRESS, PHONE AND/OR EMAIL OF PERMITTEE: Enter the name and street address, city/town, state, and ZIP code of the permittee. Also provide an email address (if available) and/or a phone number.

PERMIT OR EPA ID NUMBER: Enter the well identification number or permit number assigned to the well by the EPA or the permitting authority.

API NUMBER: Enter the number assigned by the local jurisdiction (usually a State Oil and Gas Agency) using the American Petroleum Institute standard numbering system.

FULL WELL NAME: Enter the full name of the well or project.

Enter the **STATE** and **COUNTY** where the well is located. For States that do not have counties, use the name of that State's equivalent jurisdiction at a more local level.

WELL LOCATION: Fill in the complete township, range, and section to the nearest quarter-quarter section. A township is north or south of the baseline, and a range is east or west of the principal meridian (e.g., T12N, R34W). Also include the distance, in feet, from the nearest north or south line and nearest east or west line of the quarter-section. Also, enter the **latitude** and **longitude** of the well in decimal degrees, to five or six places if possible; be sure to include a negative sign for the longitude of a well in the Western Hemisphere and a negative sign for the latitude of a well in the Southern Hemisphere.

Enter the **WELL CLASS,** i.e., the class of injection well as defined in 40 CFR 144.6.

TIMING OF THE ACTION: Check ***Notice prior to work*** if the activity has not yet occurred (i.e., is planned). Check ***Report after work*** if the activity described has already occurred. As appropriate, include the date the activity is expected to start or the date the activity was completed. (Note this may not be available, e.g., for a plugging plan submitted with a permit application.)

TYPE OF ACTION: Check the appropriate box to describe the kind of activity being reported. Check ***Well Rework*** for work that was/will be performed on the well after it has already been in operation as an injection well. Check ***Plugging and Abandonment*** to report on plans for or descriptions of final closure/plugging after use as an injection well. Check ***Conversion to a Non-Injection Well*** if the well is to be converted to something other than an injection well.

Provide a **NARRATIVE DESCRIPTION** of the work planned to be performed, or that was performed. The narrative should include a description of the main procedures planned or that occurred during the work activity. A service company report, daily report, or similar document may be attached if it includes all the requested information and is clear and legible.

For well reworks, include the following information: The reason for the well rework; depths of activity; type of activity; changes to injection well configuration, well casing, or cement behind casing; any plug added to the well and its depth; any newly drilled interval and its depth; method(s) to demonstrate that the well has mechanical integrity (as applicable); and any deviations from the approved rework plan (as applicable).

For a well plugging plan, include the following information: Reason for the well plugging; number of plugs placed, and their depths; materials used as plugs (e.g., cast iron bridge plug, cement, cement retainer); method to set plugs; and wait-on-cement times, if any. Also provide one or more cost estimates from an independent firm in the business of plugging and abandoning wells to plug the well as described in the plan.

For well plugging affidavit, include the following information: Reason for the well plugging; number of plugs placed, and their depths; materials used as plugs (e.g., cast iron bridge plug, cement, cement retainer); method to set plugs; wait-on-cement times, if any; and any deviations from the approved plugging plan (if applicable).

For conversion to a non-injection well, include the following information: Depths of activity; type of activity; changes to injection well configuration, well casing, or cement behind casing; any plug added to the well and its depth; any newly drilled interval and its depth; depths of new perforations; and method(s) to demonstrate that the well has mechanical integrity (as applicable).

For all of the above activities, include a well sketch depicting the work, results of well tests/logging performed, service company tickets, and any other available information demonstrating how the work was/is to be performed. Also, specify whether depths are below ground surface, relative to Kelly bushing, etc.

CERTIFICATION: This form must be signed and dated by either: a responsible corporate officer for a corporation, by a general partner for a partnership, by the proprietor of a sole proprietorship, or by a principal executive or ranking elected official for a public agency.

PAPERWORK REDUCTION ACT NOTICE: The public reporting and recordkeeping burden for this collection of information is estimated to average between 6.0 and 7.9 hours per response, depending on the injection well class. Burden means the total time, effort, or financial resource expended by persons to generate, maintain, retain, or disclose or provide information to or for a Federal Agency. This includes the time needed to review instructions; develop, acquire, install, and utilize technology and systems for the purposes of collecting, validating, and verifying information, processing and maintaining information, and disclosing and providing information; adjust the existing ways to comply with any previously applicable instructions and requirements; train personnel to be able to respond to the collection of information; search data sources; complete and review the collection of information; and, transmit or otherwise disclose the information. An agency may not conduct or sponsor, and a person is not required to respond to, a collection of information unless it displays a currently valid OMB control number. Send comments on the Agency's need for this information, the accuracy of the provided burden estimates, and any suggested methods for minimizing respondent burden, including the use of automated collection techniques to Director, Collection Strategies Division, U.S. Environmental Protection Agency (2822), 1200 Pennsylvania Ave., NW., Washington, D.C. 20460. Include the OMB control number in any correspondence. Do not send the completed forms to this address.

AS-BUILT COREHOLE 435MF

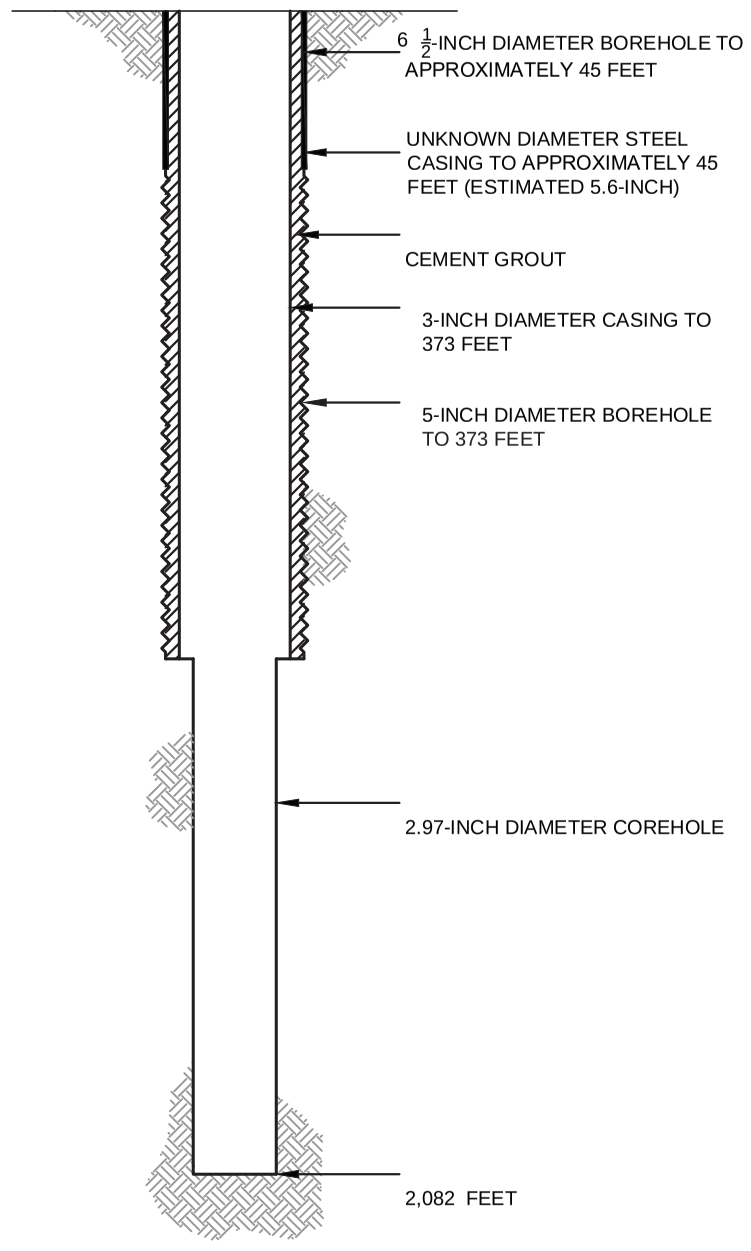

PROPOSED PLUGGING AND ABANDONMENT COREHOLE 435MF

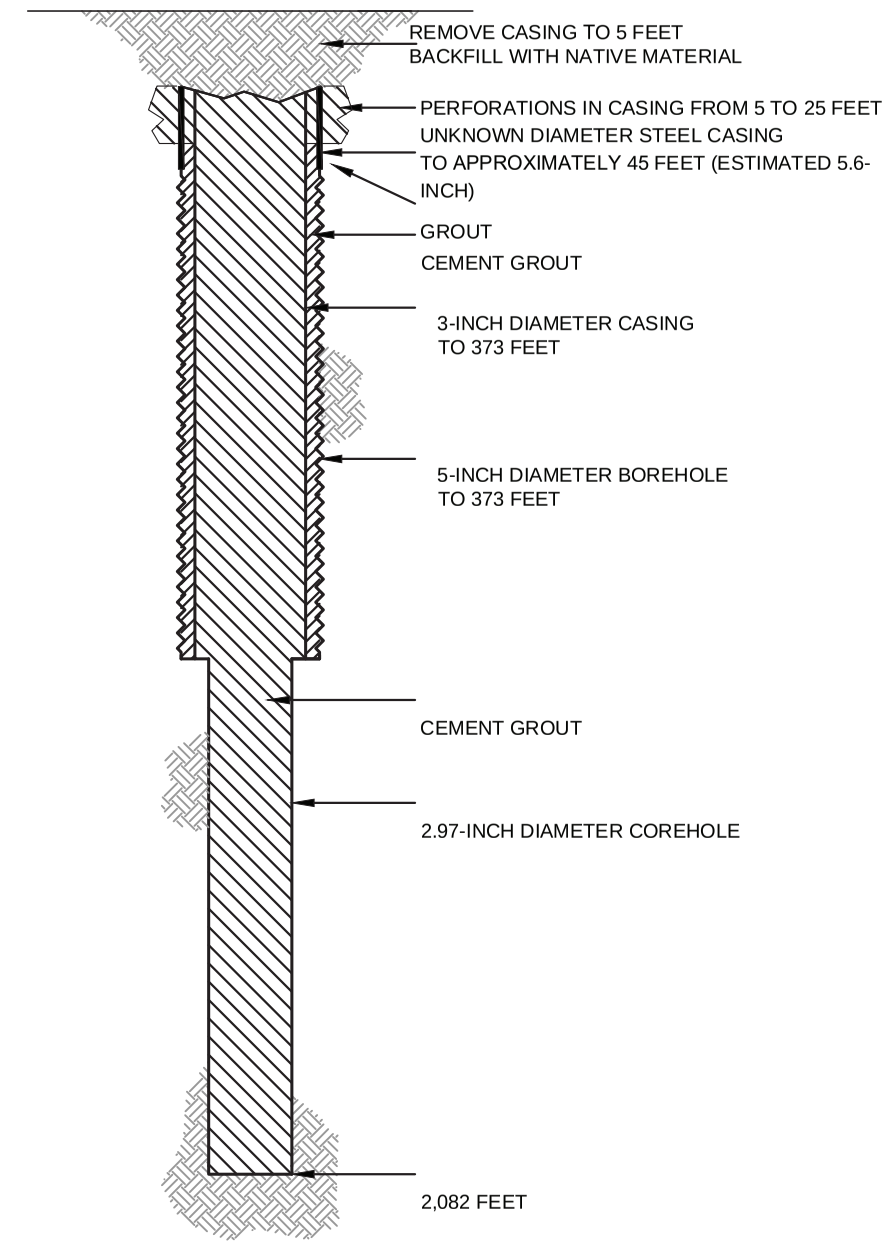

HALEY ALDRICH

FLORENCE COPPER, INC.
FLORENCE, ARIZONA

COREHOLE 435MF DIAGRAM

FLORENCE COPPER INC.

NOT TO SCALE
SEPTEMBER 2019

FIGURE 1

MOBINI, GITA Printed: 4/21/2017 12:00 PM Layout: ABANDON (2)
G:\PROJECTS\CURIS RESOURCES\38706-CURIS FEASIBILITY\DRAWINGS\EPA\WELL ABANDON\415S_ABANDON.DWG

OMB No. 2040-0042 Approval Expires 4/30/2022

United States Environmental Protection Agency

WELL REWORK RECORD, PLUGGING AND ABANDONMENT PLAN, OR PLUGGING AND ABANDONMENT AFFIDAVIT

Name and Address, Phone Number and/or Email of Permittee

Florence Copper Project
1575 W Hunt Hwy,
Florence, AZ 85132

Permit or EPA ID Number	API Number	Full Well Name
R9UIC-AZ3-FY11-1		436MF

State	County
Arizona	Pinal

Locate well in two directions from nearest lines of quarter section and drilling unit

Latitude 33.04617084

Longitude -111.427321

Surface Location

SW **1/4 of** SE **1/4 of Section** 28 **Township** 4S **Range** 9E

_____ **ft. from (N/S)** _____ **Line of quarter section**

_____ **ft. from (E/W)** _____ **Line of quarter section.**

Well Class	Timing of Action (pick one)	Type of Action (pick one)
☐ Class I ☐ Class II ☑ Class III ☐ Class V	☑ Notice Prior to Work Date Expected to Commence March 2021 ☐ Report After Work Date Work Ended	☐ Well Rework ☑ Plugging and Abandonment ☐ Conversion to a Non-Injection Well

Provide a narrative description of the work planned to be performed, or that was performed. Use additional pages as necessary. See instructions.

A workover rig capable of performing the required abandonment operations at the required depths will be moved in and set up over the core hole. The core hole will be inspected to determine the depth to which the hole remains open and if any obstructions are present in the core hole; the presence and condition of any existing collar will also be documented. If necessary, the core hole will be cleaned out to a depth of at least 100 feet below the bedrock-LBFU contact to enable placement of cement seals.

If collar is present, an attempt will be made to remove it. If removal of the collar is not feasible, it will be left in the hole and perforated as needed to allow an annular seal to be placed to a depth of at least 25 feet bgs. In areas of agricultural use, the surface casing will be cut at least 5 feet bgs and removed.

If the collar cannot be removed, it will be perforated from at least 20 feet below the bedrock-LBFU contact to at least 20 feet above the contact; from at least 20 feet below the base of the MFGU to at least 20 feet above the top of the MFGU; and from at least 25 feet bgs to 5 feet bgs.

A tremie pipe will be used to place Type V cement in the open core hole from the bottom of the core hole to the top of the core hole. Cement retainers, as described above, will be used to force cement grout into the annulus and behind perforated intervals, as necessary.

If the hole has been obstructed, as much cement as possible will be placed from 100 feet below the LBFU-bedrock contact to the top of the core hole.

The volume of Type V cement will be recorded and will not be less than the estimated volume of material required to fill each interval. All cement grout will consist of Type V cement, or equivalent approved in accordance with the UIC Permit.

Certification

I certify under the penalty of law that I have personally examined and am familiar with the information submitted in this document and all attachments and that, based on my inquiry of those individuals immediately responsible for obtaining the information, I believe that the information is true, accurate, and complete. I am aware that there are significant penalties for submitting false information, including the possibliity of fine and imprisonment. (Ref. 40 CFR § 144.32)

Name and Official Title *(Please type or print)*	Signature	Date Signed
Dan Johnson, VP - General Manager		10/3/2019

INSTRUCTIONS FOR FORM 7520-19

This form replaces forms 7520-12 and 7520-14. Use this form only when work is planned or has occurred that affects the well's construction or operation as an injection well, including work on the casing, tubing or packer (or for shallow Class V wells, the subsurface fluid emplacement network). Use one form per injection well. While reports or other information developed by contractors or service companies may be attached, this form must be signed by a responsible entity as described at 40 CFR 144.32. Note: operators closing Class V wells should use Form 7520-17.

NAME, ADDRESS, PHONE AND/OR EMAIL OF PERMITTEE: Enter the name and street address, city/town, state, and ZIP code of the permittee. Also provide an email address (if available) and/or a phone number.

PERMIT OR EPA ID NUMBER: Enter the well identification number or permit number assigned to the well by the EPA or the permitting authority.

API NUMBER: Enter the number assigned by the local jurisdiction (usually a State Oil and Gas Agency) using the American Petroleum Institute standard numbering system.

FULL WELL NAME: Enter the full name of the well or project.

Enter the **STATE** and **COUNTY** where the well is located. For States that do not have counties, use the name of that State's equivalent jurisdiction at a more local level.

WELL LOCATION: Fill in the complete township, range, and section to the nearest quarter-quarter section. A township is north or south of the baseline, and a range is east or west of the principal meridian (e.g., T12N, R34W). Also include the distance, in feet, from the nearest north or south line and nearest east or west line of the quarter-section. Also, enter the **latitude** and **longitude** of the well in decimal degrees, to five or six places if possible; be sure to include a negative sign for the longitude of a well in the Western Hemisphere and a negative sign for the latitude of a well in the Southern Hemisphere.

Enter the **WELL CLASS,** i.e., the class of injection well as defined in 40 CFR 144.6.

TIMING OF THE ACTION: Check ***Notice prior to work*** if the activity has not yet occurred (i.e., is planned). Check ***Report after work*** if the activity described has already occurred. As appropriate, include the date the activity is expected to start or the date the activity was completed. (Note this may not be available, e.g., for a plugging plan submitted with a permit application.)

TYPE OF ACTION: Check the appropriate box to describe the kind of activity being reported. Check ***Well Rework*** for work that was/will be performed on the well after it has already been in operation as an injection well. Check ***Plugging and Abandonment*** to report on plans for or descriptions of final closure/plugging after use as an injection well. Check ***Conversion to a Non-Injection Well*** if the well is to be converted to something other than an injection well.

Provide a **NARRATIVE DESCRIPTION** of the work planned to be performed, or that was performed. The narrative should include a description of the main procedures planned or that occurred during the work activity. A service company report, daily report, or similar document may be attached if it includes all the requested information and is clear and legible.

For well reworks, include the following information: The reason for the well rework; depths of activity; type of activity; changes to injection well configuration, well casing, or cement behind casing; any plug added to the well and its depth; any newly drilled interval and its depth; method(s) to demonstrate that the well has mechanical integrity (as applicable); and any deviations from the approved rework plan (as applicable).

For a well plugging plan, include the following information: Reason for the well plugging; number of plugs placed, and their depths; materials used as plugs (e.g., cast iron bridge plug, cement, cement retainer); method to set plugs; and wait-on-cement times, if any. Also provide one or more cost estimates from an independent firm in the business of plugging and abandoning wells to plug the well as described in the plan.

For well plugging affidavit, include the following information: Reason for the well plugging; number of plugs placed, and their depths; materials used as plugs (e.g., cast iron bridge plug, cement, cement retainer); method to set plugs; wait-on-cement times, if any; and any deviations from the approved plugging plan (if applicable).

For conversion to a non-injection well, include the following information: Depths of activity; type of activity; changes to injection well configuration, well casing, or cement behind casing; any plug added to the well and its depth; any newly drilled interval and its depth; depths of new perforations; and method(s) to demonstrate that the well has mechanical integrity (as applicable).

For all of the above activities, include a well sketch depicting the work, results of well tests/logging performed, service company tickets, and any other available information demonstrating how the work was/is to be performed. Also, specify whether depths are below ground surface, relative to Kelly bushing, etc.

CERTIFICATION: This form must be signed and dated by either: a responsible corporate officer for a corporation, by a general partner for a partnership, by the proprietor of a sole proprietorship, or by a principal executive or ranking elected official for a public agency.

PAPERWORK REDUCTION ACT NOTICE: The public reporting and recordkeeping burden for this collection of information is estimated to average between 6.0 and 7.9 hours per response, depending on the injection well class. Burden means the total time, effort, or financial resource expended by persons to generate, maintain, retain, or disclose or provide information to or for a Federal Agency. This includes the time needed to review instructions; develop, acquire, install, and utilize technology and systems for the purposes of collecting, validating, and verifying information, processing and maintaining information, and disclosing and providing information; adjust the existing ways to comply with any previously applicable instructions and requirements; train personnel to be able to respond to the collection of information; search data sources; complete and review the collection of information; and, transmit or otherwise disclose the information. An agency may not conduct or sponsor, and a person is not required to respond to, a collection of information unless it displays a currently valid OMB control number. Send comments on the Agency's need for this information, the accuracy of the provided burden estimates, and any suggested methods for minimizing respondent burden, including the use of automated collection techniques to Director, Collection Strategies Division, U.S. Environmental Protection Agency (2822), 1200 Pennsylvania Ave., NW., Washington, D.C. 20460. Include the OMB control number in any correspondence. Do not send the completed forms to this address.

AS-BUILT COREHOLE 436MF

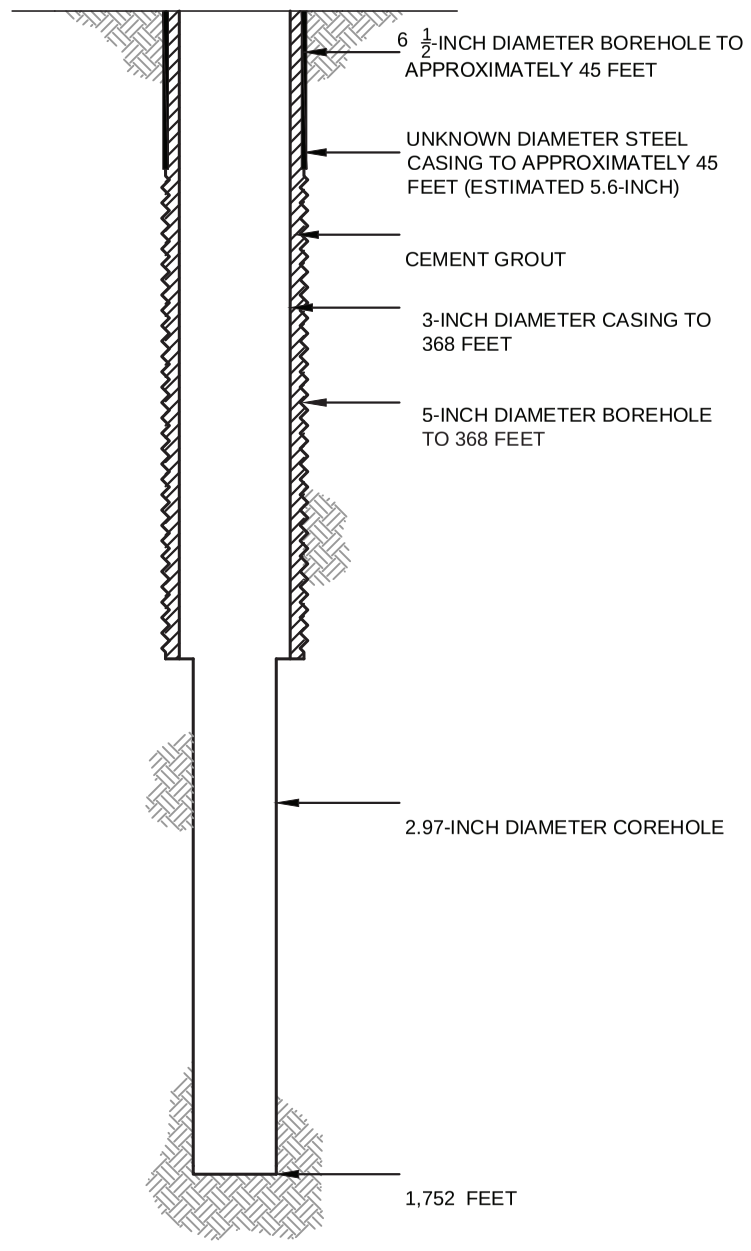

PROPOSED PLUGGING AND ABANDONMENT COREHOLE 436MF

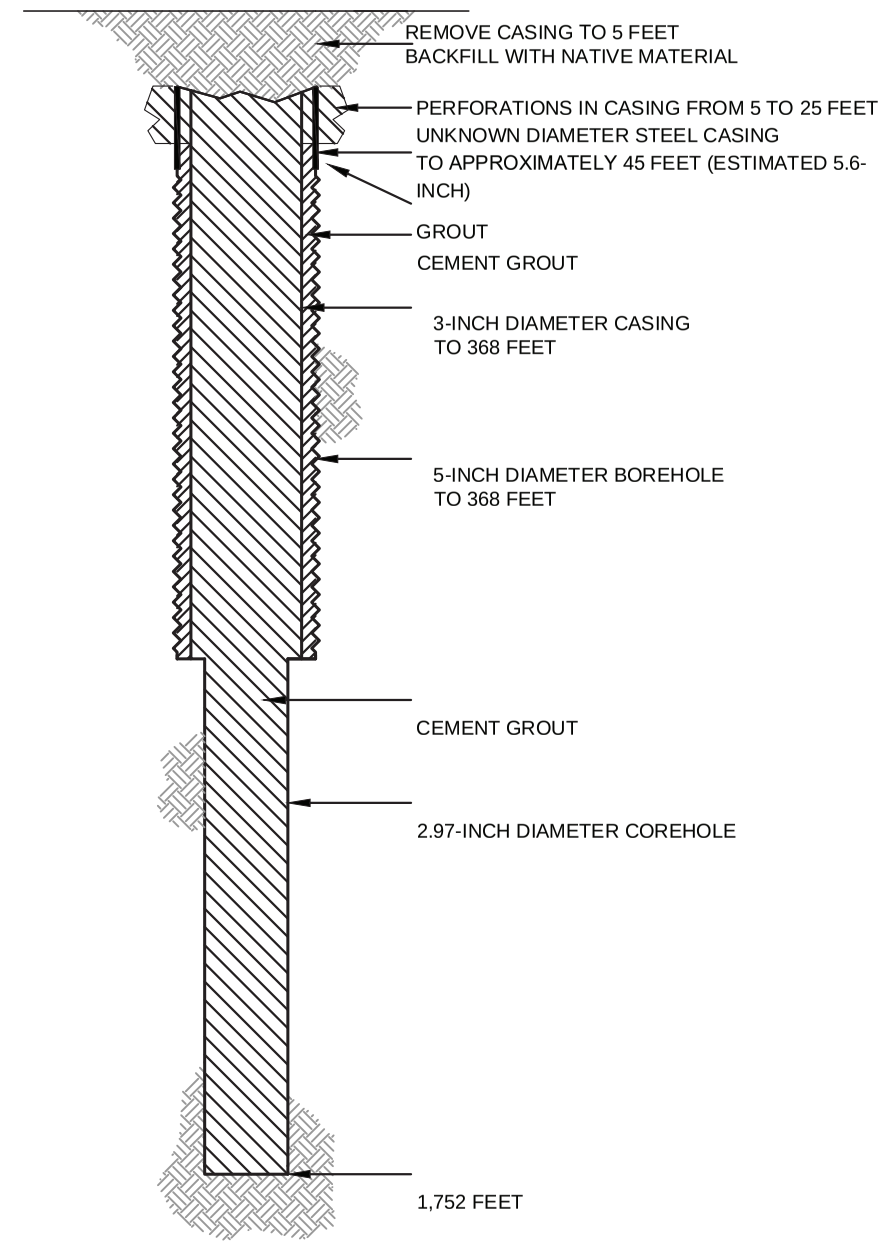

HALEY ALDRICH

FLORENCE COPPER, INC.
FLORENCE, ARIZONA

COREHOLE 436MF DIAGRAM

FLORENCE COPPER INC.

NOT TO SCALE
SEPTEMBER 2019

FIGURE 1

MOBINI, GITA Printed: 4/21/2017 12:00 PM Layout: ABANDON (2)
G:\PROJECTS\CURIS RESOURCES\38706-CURIS FEASIBILITY\DRAWINGS\EPA\WELL ABANDON\415S_ABANDON.DWG

OMB No. 2040-0042 Approval Expires 4/30/2022

United States Environmental Protection Agency

WELL REWORK RECORD, PLUGGING AND ABANDONMENT PLAN, OR PLUGGING AND ABANDONMENT AFFIDAVIT

Name and Address, Phone Number and/or Email of Permittee

Florence Copper Project
1575 W Hunt Hwy,
Florence, AZ 85132

Permit or EPA ID Number	API Number	Full Well Name
R9UIC-AZ3-FY11-1		439S

State	County
Arizona	Pinal

Locate well in two directions from nearest lines of quarter section and drilling unit

Latitude 33.05273029

Longitude -111.4342047

Surface Location

NW **1/4 of** SW **1/4 of Section** 28 **Township** 4S **Range** 9E

_____ **ft. from (N/S)** _____ **Line of quarter section**

_____ **ft. from (E/W)** _____ **Line of quarter section.**

Well Class	Timing of Action (pick one)	Type of Action (pick one)
☐ Class I ☐ Class II ☑ Class III ☐ Class V	☑ Notice Prior to Work Date Expected to Commence March 2021 ☐ Report After Work Date Work Ended	☐ Well Rework ☑ Plugging and Abandonment ☐ Conversion to a Non-Injection Well

Provide a narrative description of the work planned to be performed, or that was performed. Use additional pages as necessary. See instructions.

A workover rig capable of performing the required abandonment operations at the required depths will be moved in and set up over the core hole. The core hole will be inspected to determine the depth to which the hole remains open and if any obstructions are present in the core hole; the presence and condition of any existing collar will also be documented. If necessary, the core hole will be cleaned out to a depth of at least 100 feet below the bedrock-LBFU contact to enable placement of cement seals.

If collar is present, an attempt will be made to remove it. If removal of the collar is not feasible, it will be left in the hole and perforated as needed to allow an annular seal to be placed to a depth of at least 25 feet bgs. In areas of agricultural use, the surface casing will be cut at least 5 feet bgs and removed.

If the collar cannot be removed, it will be perforated from at least 20 feet below the bedrock-LBFU contact to at least 20 feet above the contact; from at least 20 feet below the base of the MFGU to at least 20 feet above the top of the MFGU; and from at least 25 feet bgs to 5 feet bgs.

A tremie pipe will be used to place Type V cement in the open core hole from the bottom of the core hole to the top of the core hole. Cement retainers, as described above, will be used to force cement grout into the annulus and behind perforated intervals, as necessary.

If the hole has been obstructed, as much cement as possible will be placed from 100 feet below the LBFU-bedrock contact to the top of the core hole.

The volume of Type V cement will be recorded and will not be less than the estimated volume of material required to fill each interval. All cement grout will consist of Type V cement, or equivalent approved in accordance with the UIC Permit.

Certification

I certify under the penalty of law that I have personally examined and am familiar with the information submitted in this document and all attachments and that, based on my inquiry of those individuals immediately responsible for obtaining the information, I believe that the information is true, accurate, and complete. I am aware that there are significant penalties for submitting false information, including the possibliity of fine and imprisonment. (Ref. 40 CFR § 144.32)

Name and Official Title *(Please type or print)*	Signature	Date Signed
Dan Johnson, VP - General Manager		10/3/2019

INSTRUCTIONS FOR FORM 7520-19

This form replaces forms 7520-12 and 7520-14. Use this form only when work is planned or has occurred that affects the well's construction or operation as an injection well, including work on the casing, tubing or packer (or for shallow Class V wells, the subsurface fluid emplacement network). Use one form per injection well. While reports or other information developed by contractors or service companies may be attached, this form must be signed by a responsible entity as described at 40 CFR 144.32. Note: operators closing Class V wells should use Form 7520-17.

NAME, ADDRESS, PHONE AND/OR EMAIL OF PERMITTEE: Enter the name and street address, city/town, state, and ZIP code of the permittee. Also provide an email address (if available) and/or a phone number.

PERMIT OR EPA ID NUMBER: Enter the well identification number or permit number assigned to the well by the EPA or the permitting authority.

API NUMBER: Enter the number assigned by the local jurisdiction (usually a State Oil and Gas Agency) using the American Petroleum Institute standard numbering system.

FULL WELL NAME: Enter the full name of the well or project.

Enter the **STATE** and **COUNTY** where the well is located. For States that do not have counties, use the name of that State's equivalent jurisdiction at a more local level.

WELL LOCATION: Fill in the complete township, range, and section to the nearest quarter-quarter section. A township is north or south of the baseline, and a range is east or west of the principal meridian (e.g., T12N, R34W). Also include the distance, in feet, from the nearest north or south line and nearest east or west line of the quarter-section. Also, enter the **latitude** and **longitude** of the well in decimal degrees, to five or six places if possible; be sure to include a negative sign for the longitude of a well in the Western Hemisphere and a negative sign for the latitude of a well in the Southern Hemisphere.

Enter the **WELL CLASS,** i.e., the class of injection well as defined in 40 CFR 144.6.

TIMING OF THE ACTION: Check ***Notice prior to work*** if the activity has not yet occurred (i.e., is planned). Check ***Report after work*** if the activity described has already occurred. As appropriate, include the date the activity is expected to start or the date the activity was completed. (Note this may not be available, e.g., for a plugging plan submitted with a permit application.)

TYPE OF ACTION: Check the appropriate box to describe the kind of activity being reported. Check ***Well Rework*** for work that was/will be performed on the well after it has already been in operation as an injection well. Check ***Plugging and Abandonment*** to report on plans for or descriptions of final closure/plugging after use as an injection well. Check ***Conversion to a Non-Injection Well*** if the well is to be converted to something other than an injection well.

Provide a **NARRATIVE DESCRIPTION** of the work planned to be performed, or that was performed. The narrative should include a description of the main procedures planned or that occurred during the work activity. A service company report, daily report, or similar document may be attached if it includes all the requested information and is clear and legible.

For well reworks, include the following information: The reason for the well rework; depths of activity; type of activity; changes to injection well configuration, well casing, or cement behind casing; any plug added to the well and its depth; any newly drilled interval and its depth; method(s) to demonstrate that the well has mechanical integrity (as applicable); and any deviations from the approved rework plan (as applicable).

For a well plugging plan, include the following information: Reason for the well plugging; number of plugs placed, and their depths; materials used as plugs (e.g., cast iron bridge plug, cement, cement retainer); method to set plugs; and wait-on-cement times, if any. Also provide one or more cost estimates from an independent firm in the business of plugging and abandoning wells to plug the well as described in the plan.

For well plugging affidavit, include the following information: Reason for the well plugging; number of plugs placed, and their depths; materials used as plugs (e.g., cast iron bridge plug, cement, cement retainer); method to set plugs; wait-on-cement times, if any; and any deviations from the approved plugging plan (if applicable).

For conversion to a non-injection well, include the following information: Depths of activity; type of activity; changes to injection well configuration, well casing, or cement behind casing; any plug added to the well and its depth; any newly drilled interval and its depth; depths of new perforations; and method(s) to demonstrate that the well has mechanical integrity (as applicable).

For all of the above activities, include a well sketch depicting the work, results of well tests/logging performed, service company tickets, and any other available information demonstrating how the work was/is to be performed. Also, specify whether depths are below ground surface, relative to Kelly bushing, etc.

CERTIFICATION: This form must be signed and dated by either: a responsible corporate officer for a corporation, by a general partner for a partnership, by the proprietor of a sole proprietorship, or by a principal executive or ranking elected official for a public agency.

PAPERWORK REDUCTION ACT NOTICE: The public reporting and recordkeeping burden for this collection of information is estimated to average between 6.0 and 7.9 hours per response, depending on the injection well class. Burden means the total time, effort, or financial resource expended by persons to generate, maintain, retain, or disclose or provide information to or for a Federal Agency. This includes the time needed to review instructions; develop, acquire, install, and utilize technology and systems for the purposes of collecting, validating, and verifying information, processing and maintaining information, and disclosing and providing information; adjust the existing ways to comply with any previously applicable instructions and requirements; train personnel to be able to respond to the collection of information; search data sources; complete and review the collection of information; and, transmit or otherwise disclose the information. An agency may not conduct or sponsor, and a person is not required to respond to, a collection of information unless it displays a currently valid OMB control number. Send comments on the Agency's need for this information, the accuracy of the provided burden estimates, and any suggested methods for minimizing respondent burden, including the use of automated collection techniques to Director, Collection Strategies Division, U.S. Environmental Protection Agency (2822), 1200 Pennsylvania Ave., NW., Washington, D.C. 20460. Include the OMB control number in any correspondence. Do not send the completed forms to this address.

AS-BUILT COREHOLE 439S

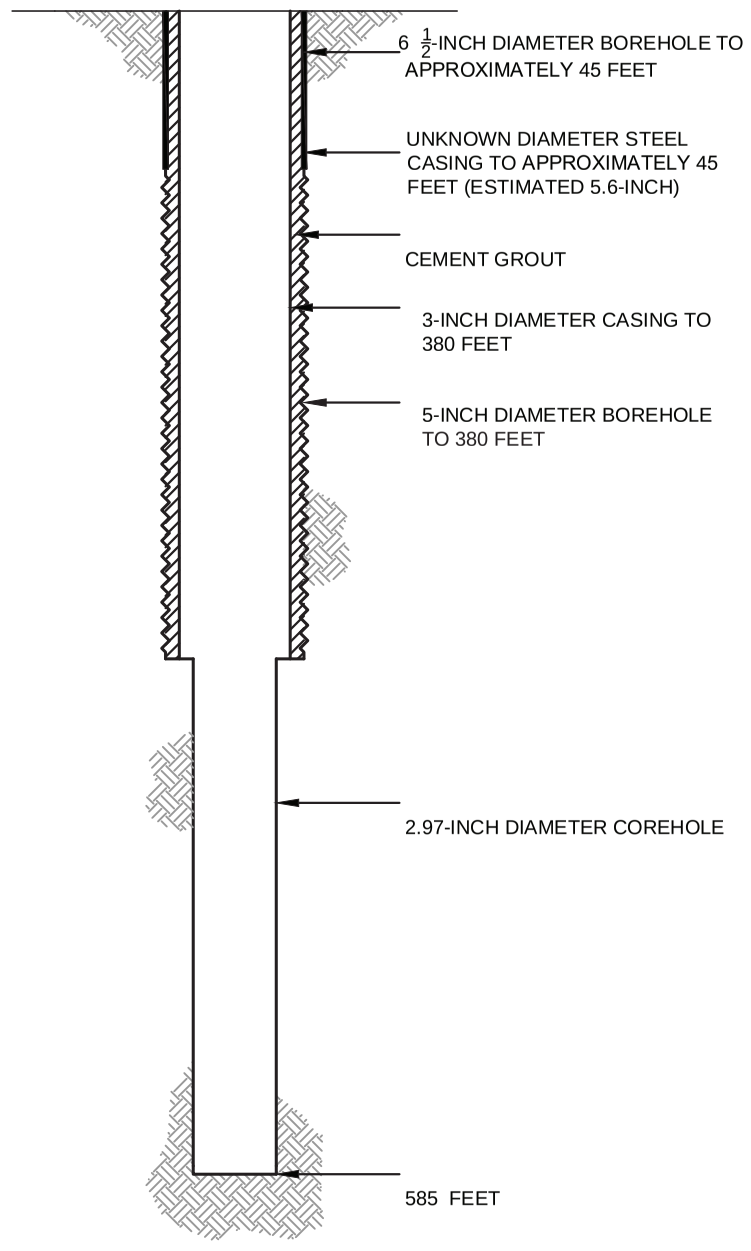

PROPOSED PLUGGING AND ABANDONMENT COREHOLE 439S

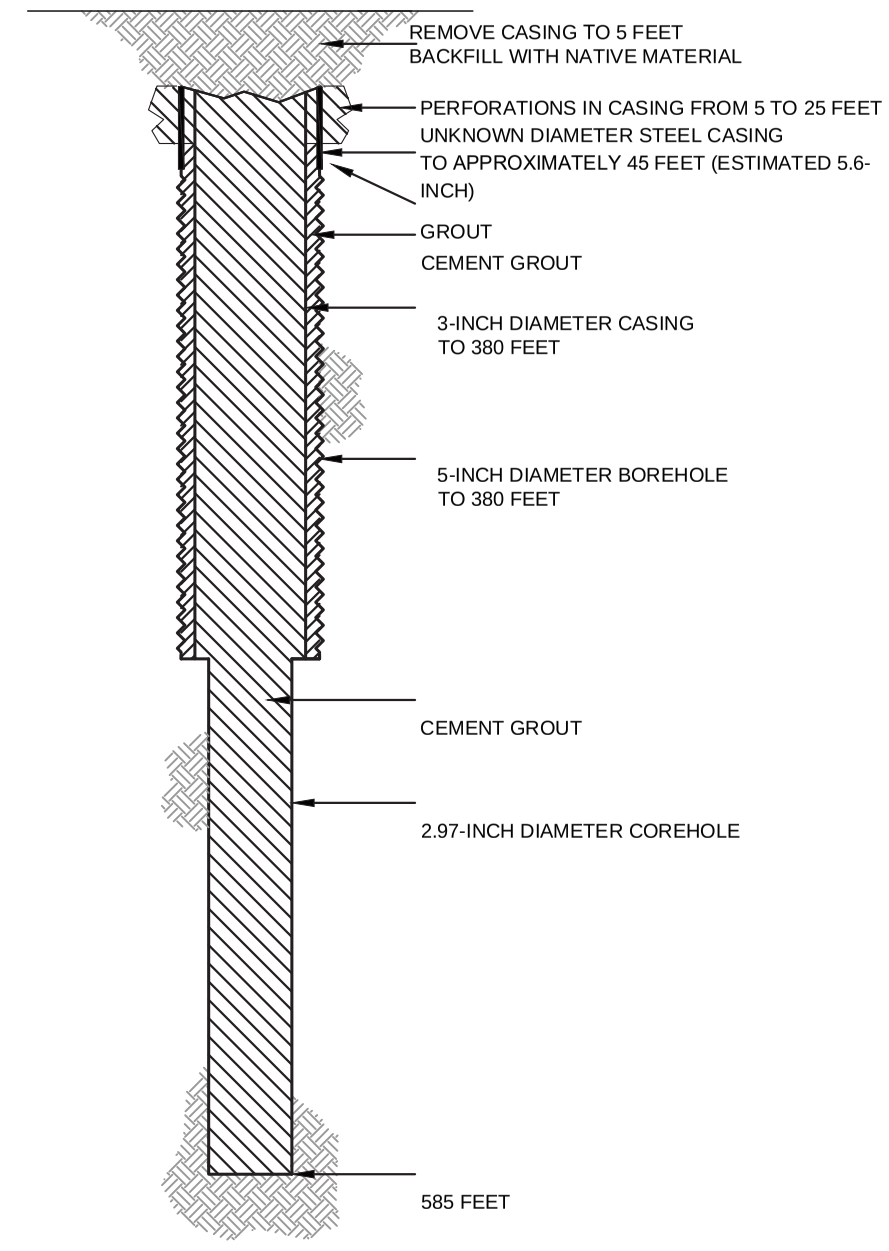

HALEY ALDRICH

FLORENCE COPPER, INC.
FLORENCE, ARIZONA

COREHOLE 439S DIAGRAM

FLORENCE COPPER INC.

NOT TO SCALE
SEPTEMBER 2019

FIGURE 1

MOBINI, GITA Printed: 4/21/2017 12:00 PM Layout: ABANDON (2)
G:\PROJECTS\CURIS RESOURCES\38706-CURIS FEASIBILITY\DRAWINGS\EPA\WELL ABANDON\415S_ABANDON.DWG

OMB No. 2040-0042 Approval Expires 4/30/2022

United States Environmental Protection Agency

WELL REWORK RECORD, PLUGGING AND ABANDONMENT PLAN, OR PLUGGING AND ABANDONMENT AFFIDAVIT

Name and Address, Phone Number and/or Email of Permittee

Florence Copper Project
1575 W Hunt Hwy,
Florence, AZ 85132

Permit or EPA ID Number	API Number	Full Well Name
R9UIC-AZ3-FY11-1		440S

State	County
Arizona	Pinal

Locate well in two directions from nearest lines of quarter section and drilling unit

Latitude 33.05273344

Longitude -111.4350206

Surface Location

NW **1/4 of** SW **1/4 of Section** 28 **Township** 4S **Range** 9E

_____ **ft. from (N/S)** _____ **Line of quarter section**

_____ **ft. from (E/W)** _____ **Line of quarter section.**

Well Class	Timing of Action (pick one)	Type of Action (pick one)
☐ Class I ☐ Class II ☑ Class III ☐ Class V	☑ Notice Prior to Work Date Expected to Commence March 2021 ☐ Report After Work Date Work Ended	☐ Well Rework ☑ Plugging and Abandonment ☐ Conversion to a Non-Injection Well

Provide a narrative description of the work planned to be performed, or that was performed. Use additional pages as necessary. See instructions.

A workover rig capable of performing the required abandonment operations at the required depths will be moved in and set up over the core hole. The core hole will be inspected to determine the depth to which the hole remains open and if any obstructions are present in the core hole; the presence and condition of any existing collar will also be documented. If necessary, the core hole will be cleaned out to a depth of at least 100 feet below the bedrock-LBFU contact to enable placement of cement seals.

If collar is present, an attempt will be made to remove it. If removal of the collar is not feasible, it will be left in the hole and perforated as needed to allow an annular seal to be placed to a depth of at least 25 feet bgs. In areas of agricultural use, the surface casing will be cut at least 5 feet bgs and removed.

If the collar cannot be removed, it will be perforated from at least 20 feet below the bedrock-LBFU contact to at least 20 feet above the contact; from at least 20 feet below the base of the MFGU to at least 20 feet above the top of the MFGU; and from at least 25 feet bgs to 5 feet bgs.

A tremie pipe will be used to place Type V cement in the open core hole from the bottom of the core hole to the top of the core hole. Cement retainers, as described above, will be used to force cement grout into the annulus and behind perforated intervals, as necessary.

If the hole has been obstructed, as much cement as possible will be placed from 100 feet below the LBFU-bedrock contact to the top of the core hole.

The volume of Type V cement will be recorded and will not be less than the estimated volume of material required to fill each interval. All cement grout will consist of Type V cement, or equivalent approved in accordance with the UIC Permit.

Certification

I certify under the penalty of law that I have personally examined and am familiar with the information submitted in this document and all attachments and that, based on my inquiry of those individuals immediately responsible for obtaining the information, I believe that the information is true, accurate, and complete. I am aware that there are significant penalties for submitting false information, including the possibliity of fine and imprisonment. (Ref. 40 CFR § 144.32)

Name and Official Title *(Please type or print)*	Signature	Date Signed
Dan Johnson, VP - General Manager		10/3/2019

INSTRUCTIONS FOR FORM 7520-19

This form replaces forms 7520-12 and 7520-14. Use this form only when work is planned or has occurred that affects the well's construction or operation as an injection well, including work on the casing, tubing or packer (or for shallow Class V wells, the subsurface fluid emplacement network). Use one form per injection well. While reports or other information developed by contractors or service companies may be attached, this form must be signed by a responsible entity as described at 40 CFR 144.32. Note: operators closing Class V wells should use Form 7520-17.

NAME, ADDRESS, PHONE AND/OR EMAIL OF PERMITTEE: Enter the name and street address, city/town, state, and ZIP code of the permittee. Also provide an email address (if available) and/or a phone number.

PERMIT OR EPA ID NUMBER: Enter the well identification number or permit number assigned to the well by the EPA or the permitting authority.

API NUMBER: Enter the number assigned by the local jurisdiction (usually a State Oil and Gas Agency) using the American Petroleum Institute standard numbering system.

FULL WELL NAME: Enter the full name of the well or project.

Enter the **STATE** and **COUNTY** where the well is located. For States that do not have counties, use the name of that State's equivalent jurisdiction at a more local level.

WELL LOCATION: Fill in the complete township, range, and section to the nearest quarter-quarter section. A township is north or south of the baseline, and a range is east or west of the principal meridian (e.g., T12N, R34W). Also include the distance, in feet, from the nearest north or south line and nearest east or west line of the quarter-section. Also, enter the **latitude** and **longitude** of the well in decimal degrees, to five or six places if possible; be sure to include a negative sign for the longitude of a well in the Western Hemisphere and a negative sign for the latitude of a well in the Southern Hemisphere.

Enter the **WELL CLASS,** i.e., the class of injection well as defined in 40 CFR 144.6.

TIMING OF THE ACTION: Check ***Notice prior to work*** if the activity has not yet occurred (i.e., is planned). Check ***Report after work*** if the activity described has already occurred. As appropriate, include the date the activity is expected to start or the date the activity was completed. (Note this may not be available, e.g., for a plugging plan submitted with a permit application.)

TYPE OF ACTION: Check the appropriate box to describe the kind of activity being reported. Check ***Well Rework*** for work that was/will be performed on the well after it has already been in operation as an injection well. Check ***Plugging and Abandonment*** to report on plans for or descriptions of final closure/plugging after use as an injection well. Check ***Conversion to a Non-Injection Well*** if the well is to be converted to something other than an injection well.

Provide a **NARRATIVE DESCRIPTION** of the work planned to be performed, or that was performed. The narrative should include a description of the main procedures planned or that occurred during the work activity. A service company report, daily report, or similar document may be attached if it includes all the requested information and is clear and legible.

For well reworks, include the following information: The reason for the well rework; depths of activity; type of activity; changes to injection well configuration, well casing, or cement behind casing; any plug added to the well and its depth; any newly drilled interval and its depth; method(s) to demonstrate that the well has mechanical integrity (as applicable); and any deviations from the approved rework plan (as applicable).

For a well plugging plan, include the following information: Reason for the well plugging; number of plugs placed, and their depths; materials used as plugs (e.g., cast iron bridge plug, cement, cement retainer); method to set plugs; and wait-on-cement times, if any. Also provide one or more cost estimates from an independent firm in the business of plugging and abandoning wells to plug the well as described in the plan.

For well plugging affidavit, include the following information: Reason for the well plugging; number of plugs placed, and their depths; materials used as plugs (e.g., cast iron bridge plug, cement, cement retainer); method to set plugs; wait-on-cement times, if any; and any deviations from the approved plugging plan (if applicable).

For conversion to a non-injection well, include the following information: Depths of activity; type of activity; changes to injection well configuration, well casing, or cement behind casing; any plug added to the well and its depth; any newly drilled interval and its depth; depths of new perforations; and method(s) to demonstrate that the well has mechanical integrity (as applicable).

For all of the above activities, include a well sketch depicting the work, results of well tests/logging performed, service company tickets, and any other available information demonstrating how the work was/is to be performed. Also, specify whether depths are below ground surface, relative to Kelly bushing, etc.

CERTIFICATION: This form must be signed and dated by either: a responsible corporate officer for a corporation, by a general partner for a partnership, by the proprietor of a sole proprietorship, or by a principal executive or ranking elected official for a public agency.

PAPERWORK REDUCTION ACT NOTICE: The public reporting and recordkeeping burden for this collection of information is estimated to average between 6.0 and 7.9 hours per response, depending on the injection well class. Burden means the total time, effort, or financial resource expended by persons to generate, maintain, retain, or disclose or provide information to or for a Federal Agency. This includes the time needed to review instructions; develop, acquire, install, and utilize technology and systems for the purposes of collecting, validating, and verifying information, processing and maintaining information, and disclosing and providing information; adjust the existing ways to comply with any previously applicable instructions and requirements; train personnel to be able to respond to the collection of information; search data sources; complete and review the collection of information; and, transmit or otherwise disclose the information. An agency may not conduct or sponsor, and a person is not required to respond to, a collection of information unless it displays a currently valid OMB control number. Send comments on the Agency's need for this information, the accuracy of the provided burden estimates, and any suggested methods for minimizing respondent burden, including the use of automated collection techniques to Director, Collection Strategies Division, U.S. Environmental Protection Agency (2822), 1200 Pennsylvania Ave., NW., Washington, D.C. 20460. Include the OMB control number in any correspondence. Do not send the completed forms to this address.

AS-BUILT COREHOLE 440S

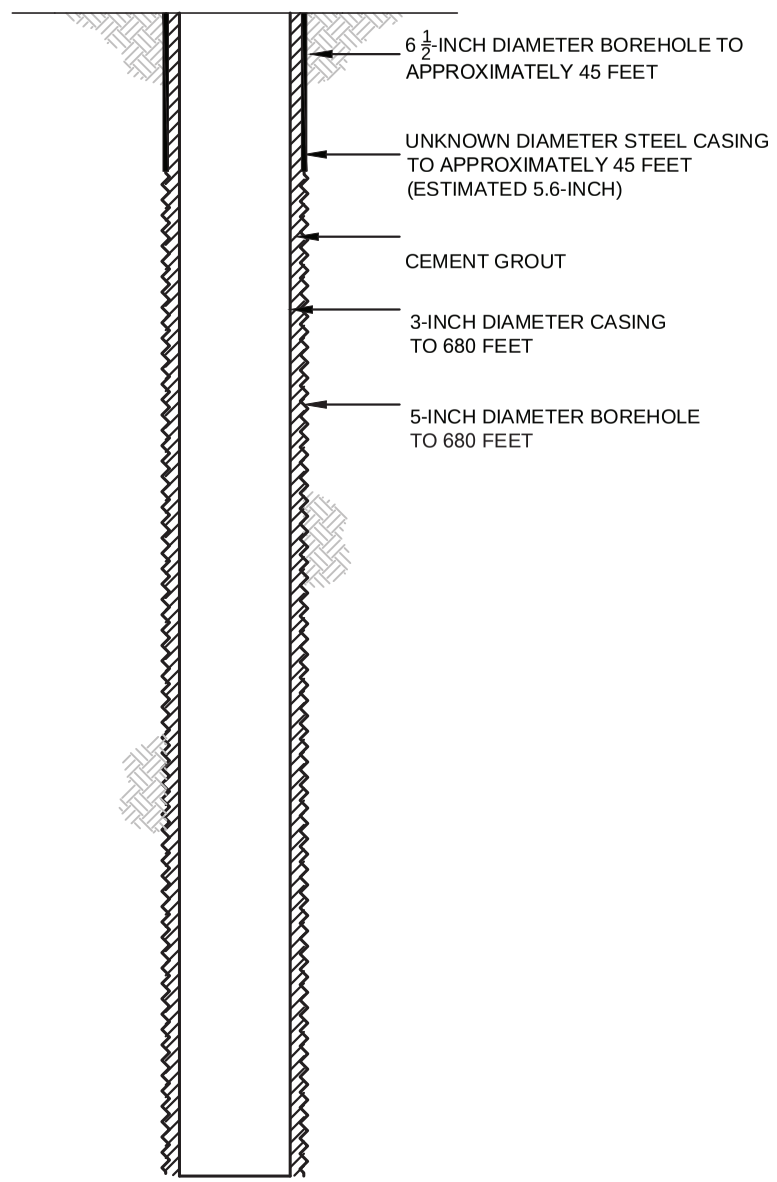

PROPOSED PLUGGING AND ABANDONMENT COREHOLE 440S

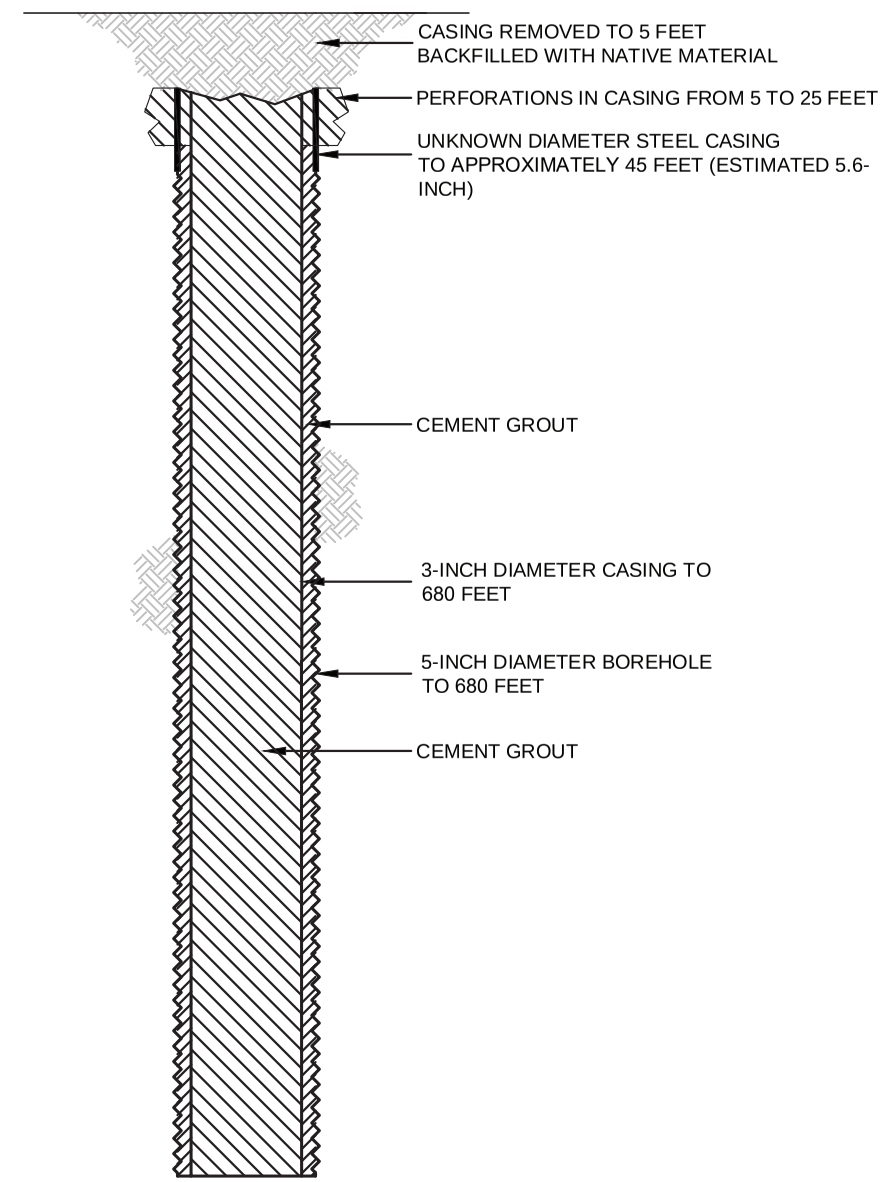

HALEY ALDRICH

FLORENCE COPPER, INC.
FLORENCE, ARIZONA

COREHOLE 440S DIAGRAM

FLORENCE COPPER INC.

NOT TO SCALE
SEPTEMBER 2019

FIGURE 1

MOBINI, GITA Printed: 4/21/2017 12:13 PM Layout: ABANDON (2)
G:\PROJECTS\CURIS RESOURCES\38706-CURIS FEASIBILITY\DRAWINGS\EPA\WELL\ABANDON\448S_ABANDON.DWG

OMB No. 2040-0042 Approval Expires 4/30/2022

United States Environmental Protection Agency

WELL REWORK RECORD, PLUGGING AND ABANDONMENT PLAN, OR PLUGGING AND ABANDONMENT AFFIDAVIT

Name and Address, Phone Number and/or Email of Permittee

Florence Copper Project
1575 W Hunt Hwy,
Florence, AZ 85132

Permit or EPA ID Number	API Number	Full Well Name
R9UIC-AZ3-FY11-1		441S

State	County
Arizona	Pinal

Locate well in two directions from nearest lines of quarter section and drilling unit

Latitude 33.05273659

Longitude -111.4358365

Surface Location

NW **1/4 of** SW **1/4 of Section** 28 **Township** 4S **Range** 9E

_____ **ft. from (N/S)** _____ **Line of quarter section**

_____ **ft. from (E/W)** _____ **Line of quarter section.**

Well Class	Timing of Action (pick one)	Type of Action (pick one)
☐ Class I ☐ Class II ☑ Class III ☐ Class V	☑ Notice Prior to Work Date Expected to Commence March 2021 ☐ Report After Work Date Work Ended	☐ Well Rework ☑ Plugging and Abandonment ☐ Conversion to a Non-Injection Well

Provide a narrative description of the work planned to be performed, or that was performed. Use additional pages as necessary. See instructions.

A workover rig capable of performing the required abandonment operations at the required depths will be moved in and set up over the core hole. The core hole will be inspected to determine the depth to which the hole remains open and if any obstructions are present in the core hole; the presence and condition of any existing collar will also be documented. If necessary, the core hole will be cleaned out to a depth of at least 100 feet below the bedrock-LBFU contact to enable placement of cement seals.

If collar is present, an attempt will be made to remove it. If removal of the collar is not feasible, it will be left in the hole and perforated as needed to allow an annular seal to be placed to a depth of at least 25 feet bgs. In areas of agricultural use, the surface casing will be cut at least 5 feet bgs and removed.

If the collar cannot be removed, it will be perforated from at least 20 feet below the bedrock-LBFU contact to at least 20 feet above the contact; from at least 20 feet below the base of the MFGU to at least 20 feet above the top of the MFGU; and from at least 25 feet bgs to 5 feet bgs.

A tremie pipe will be used to place Type V cement in the open core hole from the bottom of the core hole to the top of the core hole. Cement retainers, as described above, will be used to force cement grout into the annulus and behind perforated intervals, as necessary.

If the hole has been obstructed, as much cement as possible will be placed from 100 feet below the LBFU-bedrock contact to the top of the core hole.

The volume of Type V cement will be recorded and will not be less than the estimated volume of material required to fill each interval. All cement grout will consist of Type V cement, or equivalent approved in accordance with the UIC Permit.

Certification

I certify under the penalty of law that I have personally examined and am familiar with the information submitted in this document and all attachments and that, based on my inquiry of those individuals immediately responsible for obtaining the information, I believe that the information is true, accurate, and complete. I am aware that there are significant penalties for submitting false information, including the possibliity of fine and imprisonment. (Ref. 40 CFR § 144.32)

Name and Official Title *(Please type or print)*	Signature	Date Signed
Dan Johnson, VP - General Manager		10/3/2019

INSTRUCTIONS FOR FORM 7520-19

This form replaces forms 7520-12 and 7520-14. Use this form only when work is planned or has occurred that affects the well's construction or operation as an injection well, including work on the casing, tubing or packer (or for shallow Class V wells, the subsurface fluid emplacement network). Use one form per injection well. While reports or other information developed by contractors or service companies may be attached, this form must be signed by a responsible entity as described at 40 CFR 144.32. Note: operators closing Class V wells should use Form 7520-17.

NAME, ADDRESS, PHONE AND/OR EMAIL OF PERMITTEE: Enter the name and street address, city/town, state, and ZIP code of the permittee. Also provide an email address (if available) and/or a phone number.

PERMIT OR EPA ID NUMBER: Enter the well identification number or permit number assigned to the well by the EPA or the permitting authority.

API NUMBER: Enter the number assigned by the local jurisdiction (usually a State Oil and Gas Agency) using the American Petroleum Institute standard numbering system.

FULL WELL NAME: Enter the full name of the well or project.

Enter the **STATE** and **COUNTY** where the well is located. For States that do not have counties, use the name of that State's equivalent jurisdiction at a more local level.

WELL LOCATION: Fill in the complete township, range, and section to the nearest quarter-quarter section. A township is north or south of the baseline, and a range is east or west of the principal meridian (e.g., T12N, R34W). Also include the distance, in feet, from the nearest north or south line and nearest east or west line of the quarter-section. Also, enter the **latitude** and **longitude** of the well in decimal degrees, to five or six places if possible; be sure to include a negative sign for the longitude of a well in the Western Hemisphere and a negative sign for the latitude of a well in the Southern Hemisphere.

Enter the **WELL CLASS,** i.e., the class of injection well as defined in 40 CFR 144.6.

TIMING OF THE ACTION: Check ***Notice prior to work*** if the activity has not yet occurred (i.e., is planned). Check ***Report after work*** if the activity described has already occurred. As appropriate, include the date the activity is expected to start or the date the activity was completed. (Note this may not be available, e.g., for a plugging plan submitted with a permit application.)

TYPE OF ACTION: Check the appropriate box to describe the kind of activity being reported. Check ***Well Rework*** for work that was/will be performed on the well after it has already been in operation as an injection well. Check ***Plugging and Abandonment*** to report on plans for or descriptions of final closure/plugging after use as an injection well. Check ***Conversion to a Non-Injection Well*** if the well is to be converted to something other than an injection well.

Provide a **NARRATIVE DESCRIPTION** of the work planned to be performed, or that was performed. The narrative should include a description of the main procedures planned or that occurred during the work activity. A service company report, daily report, or similar document may be attached if it includes all the requested information and is clear and legible.

For well reworks, include the following information: The reason for the well rework; depths of activity; type of activity; changes to injection well configuration, well casing, or cement behind casing; any plug added to the well and its depth; any newly drilled interval and its depth; method(s) to demonstrate that the well has mechanical integrity (as applicable); and any deviations from the approved rework plan (as applicable).

For a well plugging plan, include the following information: Reason for the well plugging; number of plugs placed, and their depths; materials used as plugs (e.g., cast iron bridge plug, cement, cement retainer); method to set plugs; and wait-on-cement times, if any. Also provide one or more cost estimates from an independent firm in the business of plugging and abandoning wells to plug the well as described in the plan.

For well plugging affidavit, include the following information: Reason for the well plugging; number of plugs placed, and their depths; materials used as plugs (e.g., cast iron bridge plug, cement, cement retainer); method to set plugs; wait-on-cement times, if any; and any deviations from the approved plugging plan (if applicable).

For conversion to a non-injection well, include the following information: Depths of activity; type of activity; changes to injection well configuration, well casing, or cement behind casing; any plug added to the well and its depth; any newly drilled interval and its depth; depths of new perforations; and method(s) to demonstrate that the well has mechanical integrity (as applicable).

For all of the above activities, include a well sketch depicting the work, results of well tests/logging performed, service company tickets, and any other available information demonstrating how the work was/is to be performed. Also, specify whether depths are below ground surface, relative to Kelly bushing, etc.

CERTIFICATION: This form must be signed and dated by either: a responsible corporate officer for a corporation, by a general partner for a partnership, by the proprietor of a sole proprietorship, or by a principal executive or ranking elected official for a public agency.

PAPERWORK REDUCTION ACT NOTICE: The public reporting and recordkeeping burden for this collection of information is estimated to average between 6.0 and 7.9 hours per response, depending on the injection well class. Burden means the total time, effort, or financial resource expended by persons to generate, maintain, retain, or disclose or provide information to or for a Federal Agency. This includes the time needed to review instructions; develop, acquire, install, and utilize technology and systems for the purposes of collecting, validating, and verifying information, processing and maintaining information, and disclosing and providing information; adjust the existing ways to comply with any previously applicable instructions and requirements; train personnel to be able to respond to the collection of information; search data sources; complete and review the collection of information; and, transmit or otherwise disclose the information. An agency may not conduct or sponsor, and a person is not required to respond to, a collection of information unless it displays a currently valid OMB control number. Send comments on the Agency's need for this information, the accuracy of the provided burden estimates, and any suggested methods for minimizing respondent burden, including the use of automated collection techniques to Director, Collection Strategies Division, U.S. Environmental Protection Agency (2822), 1200 Pennsylvania Ave., NW., Washington, D.C. 20460. Include the OMB control number in any correspondence. Do not send the completed forms to this address.

AS-BUILT COREHOLE 441S

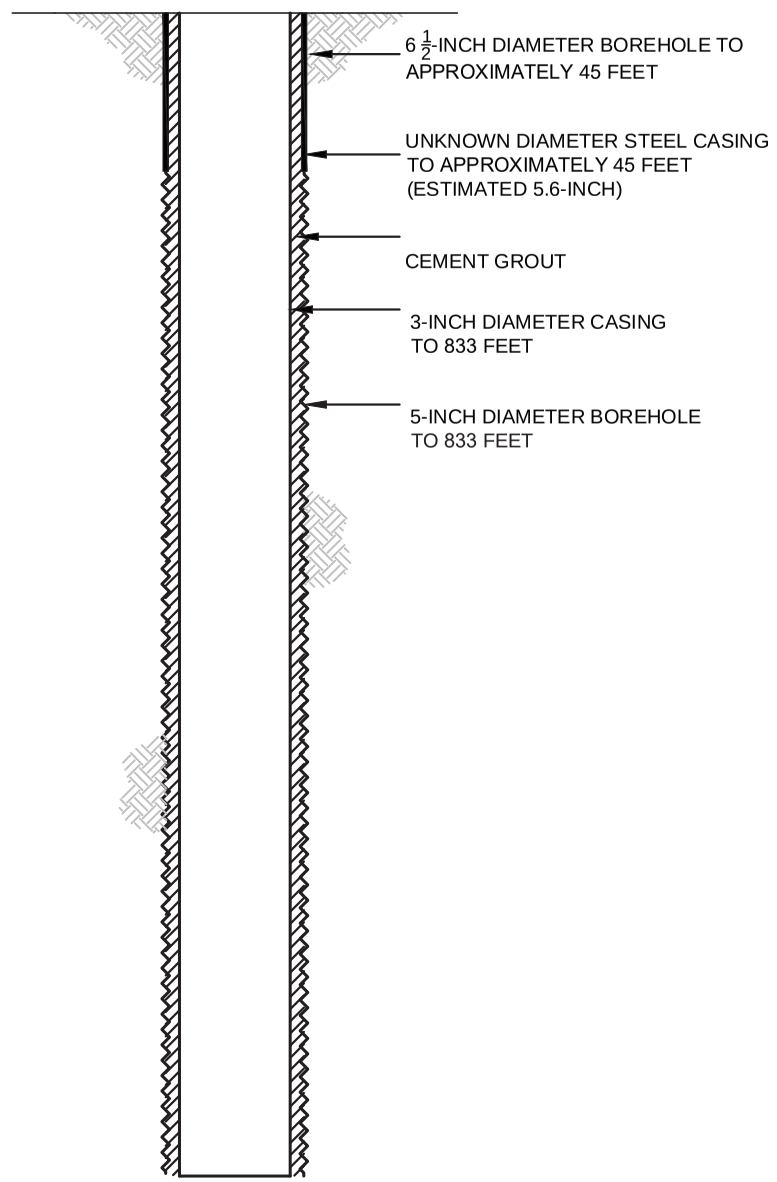

PROPOSED PLUGGING AND ABANDONMENT COREHOLE 441S

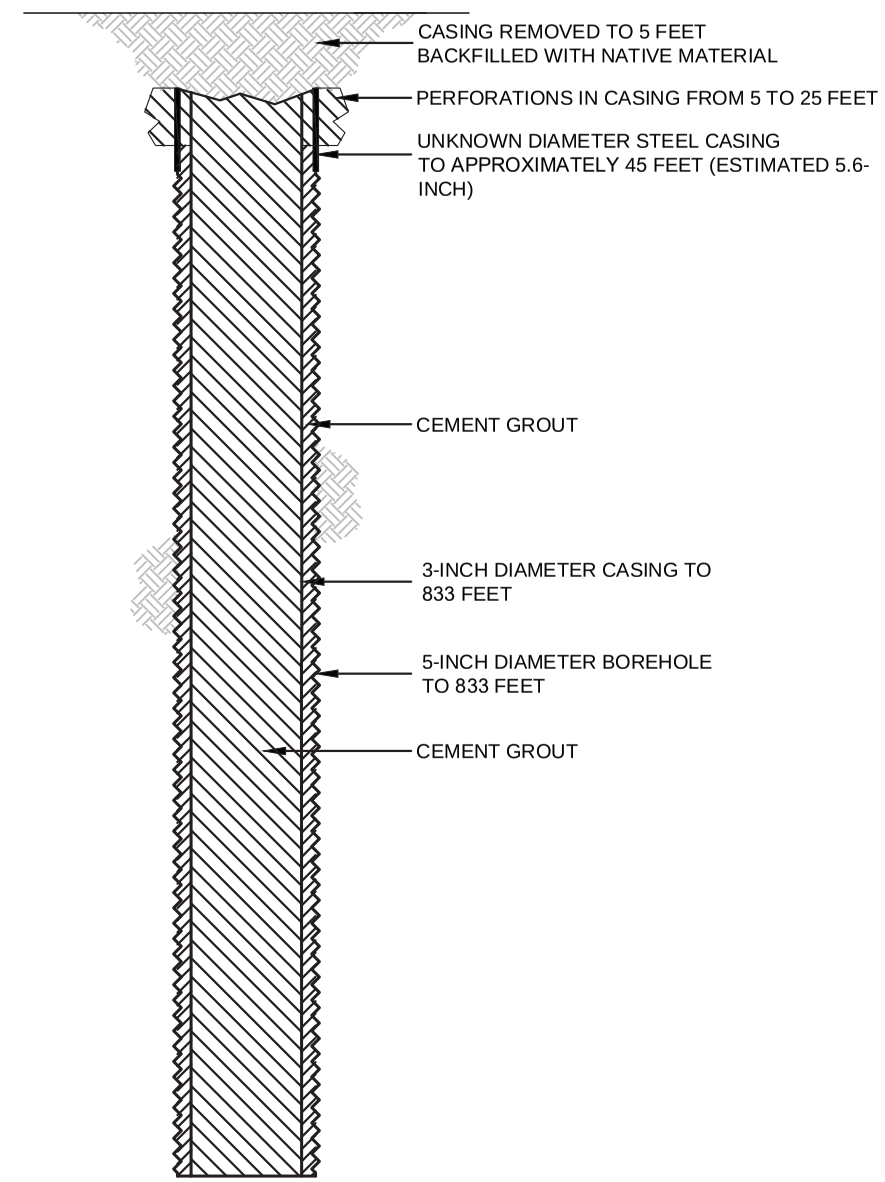

HALEY ALDRICH

FLORENCE COPPER, INC.
FLORENCE, ARIZONA

COREHOLE 441S DIAGRAM

FLORENCE COPPER INC.

NOT TO SCALE
SEPTEMBER 2019

FIGURE 1

MOBINI, GITA Printed: 4/21/2017 12:13 PM Layout: ABANDON (2)
G:\PROJECTS\CURIS RESOURCES\38706-CURIS FEASIBILITY\DRAWINGS\EPA\WELL\ABANDON\448S_ABANDON.DWG

OMB No. 2040-0042 Approval Expires 4/30/2022

United States Environmental Protection Agency

WELL REWORK RECORD, PLUGGING AND ABANDONMENT PLAN, OR PLUGGING AND ABANDONMENT AFFIDAVIT

Name and Address, Phone Number and/or Email of Permittee

Florence Copper Project
1575 W Hunt Hwy,
Florence, AZ 85132

Permit or EPA ID Number	API Number	Full Well Name
R9UIC-AZ3-FY11-1		442S

State	County
Arizona	Pinal

Locate well in two directions from nearest lines of quarter section and drilling unit

Latitude 33.05273973

Longitude -111.4366524

Surface Location

NW **1/4 of** SW **1/4 of Section** 28 **Township** 4S **Range** 9E

_____ **ft. from (N/S)** _____ **Line of quarter section**

_____ **ft. from (E/W)** _____ **Line of quarter section.**

Well Class	Timing of Action (pick one)	Type of Action (pick one)
☐ Class I ☐ Class II ☑ Class III ☐ Class V	☑ Notice Prior to Work Date Expected to Commence March 2021 ☐ Report After Work Date Work Ended	☐ Well Rework ☑ Plugging and Abandonment ☐ Conversion to a Non-Injection Well

Provide a narrative description of the work planned to be performed, or that was performed. Use additional pages as necessary. See instructions.

A workover rig capable of performing the required abandonment operations at the required depths will be moved in and set up over the core hole. The core hole will be inspected to determine the depth to which the hole remains open and if any obstructions are present in the core hole; the presence and condition of any existing collar will also be documented. If necessary, the core hole will be cleaned out to a depth of at least 100 feet below the bedrock-LBFU contact to enable placement of cement seals.

If collar is present, an attempt will be made to remove it. If removal of the collar is not feasible, it will be left in the hole and perforated as needed to allow an annular seal to be placed to a depth of at least 25 feet bgs. In areas of agricultural use, the surface casing will be cut at least 5 feet bgs and removed.

If the collar cannot be removed, it will be perforated from at least 20 feet below the bedrock-LBFU contact to at least 20 feet above the contact; from at least 20 feet below the base of the MFGU to at least 20 feet above the top of the MFGU; and from at least 25 feet bgs to 5 feet bgs.

A tremie pipe will be used to place Type V cement in the open core hole from the bottom of the core hole to the top of the core hole. Cement retainers, as described above, will be used to force cement grout into the annulus and behind perforated intervals, as necessary.

If the hole has been obstructed, as much cement as possible will be placed from 100 feet below the LBFU-bedrock contact to the top of the core hole.

The volume of Type V cement will be recorded and will not be less than the estimated volume of material required to fill each interval. All cement grout will consist of Type V cement, or equivalent approved in accordance with the UIC Permit.

Certification

I certify under the penalty of law that I have personally examined and am familiar with the information submitted in this document and all attachments and that, based on my inquiry of those individuals immediately responsible for obtaining the information, I believe that the information is true, accurate, and complete. I am aware that there are significant penalties for submitting false information, including the possibliity of fine and imprisonment. (Ref. 40 CFR § 144.32)

Name and Official Title *(Please type or print)*	Signature	Date Signed
Dan Johnson, VP - General Manager		10/3/2019

INSTRUCTIONS FOR FORM 7520-19

This form replaces forms 7520-12 and 7520-14. Use this form only when work is planned or has occurred that affects the well's construction or operation as an injection well, including work on the casing, tubing or packer (or for shallow Class V wells, the subsurface fluid emplacement network). Use one form per injection well. While reports or other information developed by contractors or service companies may be attached, this form must be signed by a responsible entity as described at 40 CFR 144.32. Note: operators closing Class V wells should use Form 7520-17.

NAME, ADDRESS, PHONE AND/OR EMAIL OF PERMITTEE: Enter the name and street address, city/town, state, and ZIP code of the permittee. Also provide an email address (if available) and/or a phone number.

PERMIT OR EPA ID NUMBER: Enter the well identification number or permit number assigned to the well by the EPA or the permitting authority.

API NUMBER: Enter the number assigned by the local jurisdiction (usually a State Oil and Gas Agency) using the American Petroleum Institute standard numbering system.

FULL WELL NAME: Enter the full name of the well or project.

Enter the **STATE** and **COUNTY** where the well is located. For States that do not have counties, use the name of that State's equivalent jurisdiction at a more local level.

WELL LOCATION: Fill in the complete township, range, and section to the nearest quarter-quarter section. A township is north or south of the baseline, and a range is east or west of the principal meridian (e.g., T12N, R34W). Also include the distance, in feet, from the nearest north or south line and nearest east or west line of the quarter-section. Also, enter the **latitude** and **longitude** of the well in decimal degrees, to five or six places if possible; be sure to include a negative sign for the longitude of a well in the Western Hemisphere and a negative sign for the latitude of a well in the Southern Hemisphere.

Enter the **WELL CLASS,** i.e., the class of injection well as defined in 40 CFR 144.6.

TIMING OF THE ACTION: Check ***Notice prior to work*** if the activity has not yet occurred (i.e., is planned). Check ***Report after work*** if the activity described has already occurred. As appropriate, include the date the activity is expected to start or the date the activity was completed. (Note this may not be available, e.g., for a plugging plan submitted with a permit application.)

TYPE OF ACTION: Check the appropriate box to describe the kind of activity being reported. Check ***Well Rework*** for work that was/will be performed on the well after it has already been in operation as an injection well. Check ***Plugging and Abandonment*** to report on plans for or descriptions of final closure/plugging after use as an injection well. Check ***Conversion to a Non-Injection Well*** if the well is to be converted to something other than an injection well.

Provide a **NARRATIVE DESCRIPTION** of the work planned to be performed, or that was performed. The narrative should include a description of the main procedures planned or that occurred during the work activity. A service company report, daily report, or similar document may be attached if it includes all the requested information and is clear and legible.

For well reworks, include the following information: The reason for the well rework; depths of activity; type of activity; changes to injection well configuration, well casing, or cement behind casing; any plug added to the well and its depth; any newly drilled interval and its depth; method(s) to demonstrate that the well has mechanical integrity (as applicable); and any deviations from the approved rework plan (as applicable).

For a well plugging plan, include the following information: Reason for the well plugging; number of plugs placed, and their depths; materials used as plugs (e.g., cast iron bridge plug, cement, cement retainer); method to set plugs; and wait-on-cement times, if any. Also provide one or more cost estimates from an independent firm in the business of plugging and abandoning wells to plug the well as described in the plan.

For well plugging affidavit, include the following information: Reason for the well plugging; number of plugs placed, and their depths; materials used as plugs (e.g., cast iron bridge plug, cement, cement retainer); method to set plugs; wait-on-cement times, if any; and any deviations from the approved plugging plan (if applicable).

For conversion to a non-injection well, include the following information: Depths of activity; type of activity; changes to injection well configuration, well casing, or cement behind casing; any plug added to the well and its depth; any newly drilled interval and its depth; depths of new perforations; and method(s) to demonstrate that the well has mechanical integrity (as applicable).

For all of the above activities, include a well sketch depicting the work, results of well tests/logging performed, service company tickets, and any other available information demonstrating how the work was/is to be performed. Also, specify whether depths are below ground surface, relative to Kelly bushing, etc.

CERTIFICATION: This form must be signed and dated by either: a responsible corporate officer for a corporation, by a general partner for a partnership, by the proprietor of a sole proprietorship, or by a principal executive or ranking elected official for a public agency.

PAPERWORK REDUCTION ACT NOTICE: The public reporting and recordkeeping burden for this collection of information is estimated to average between 6.0 and 7.9 hours per response, depending on the injection well class. Burden means the total time, effort, or financial resource expended by persons to generate, maintain, retain, or disclose or provide information to or for a Federal Agency. This includes the time needed to review instructions; develop, acquire, install, and utilize technology and systems for the purposes of collecting, validating, and verifying information, processing and maintaining information, and disclosing and providing information; adjust the existing ways to comply with any previously applicable instructions and requirements; train personnel to be able to respond to the collection of information; search data sources; complete and review the collection of information; and, transmit or otherwise disclose the information. An agency may not conduct or sponsor, and a person is not required to respond to, a collection of information unless it displays a currently valid OMB control number. Send comments on the Agency's need for this information, the accuracy of the provided burden estimates, and any suggested methods for minimizing respondent burden, including the use of automated collection techniques to Director, Collection Strategies Division, U.S. Environmental Protection Agency (2822), 1200 Pennsylvania Ave., NW., Washington, D.C. 20460. Include the OMB control number in any correspondence. Do not send the completed forms to this address.

AS-BUILT COREHOLE 442S

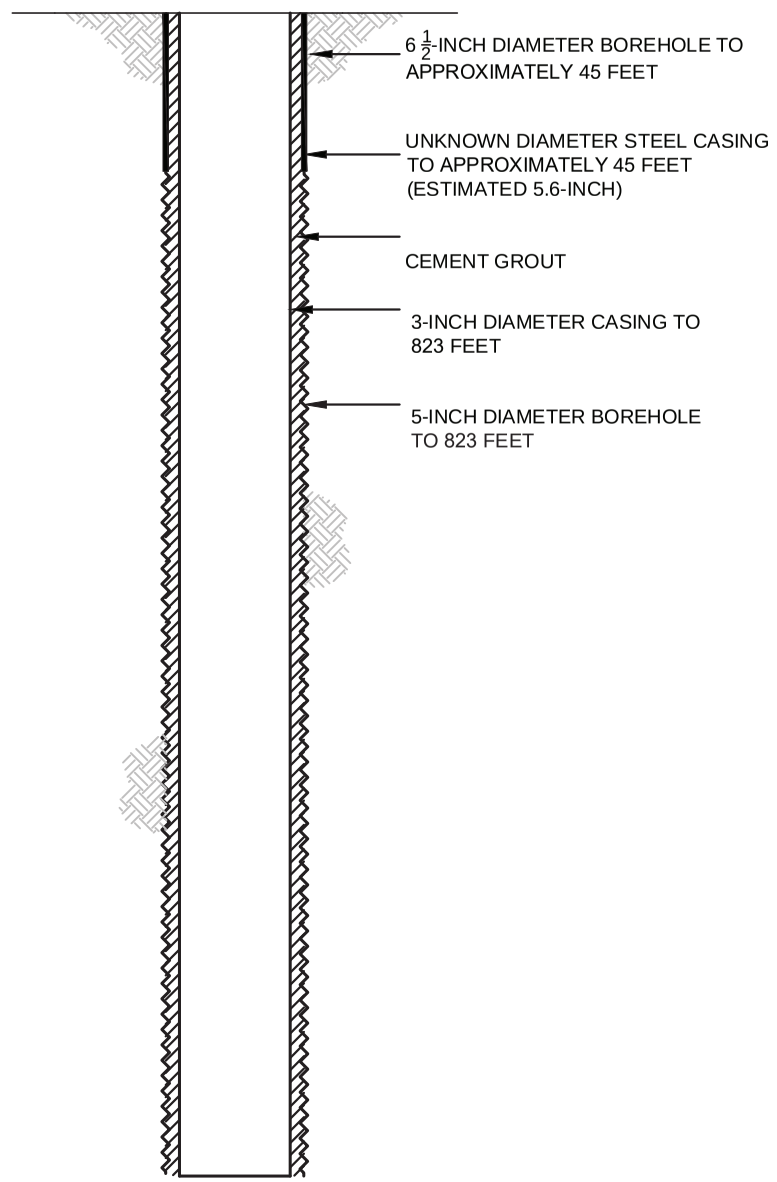

PROPOSED PLUGGING AND ABANDONMENT COREHOLE 442S

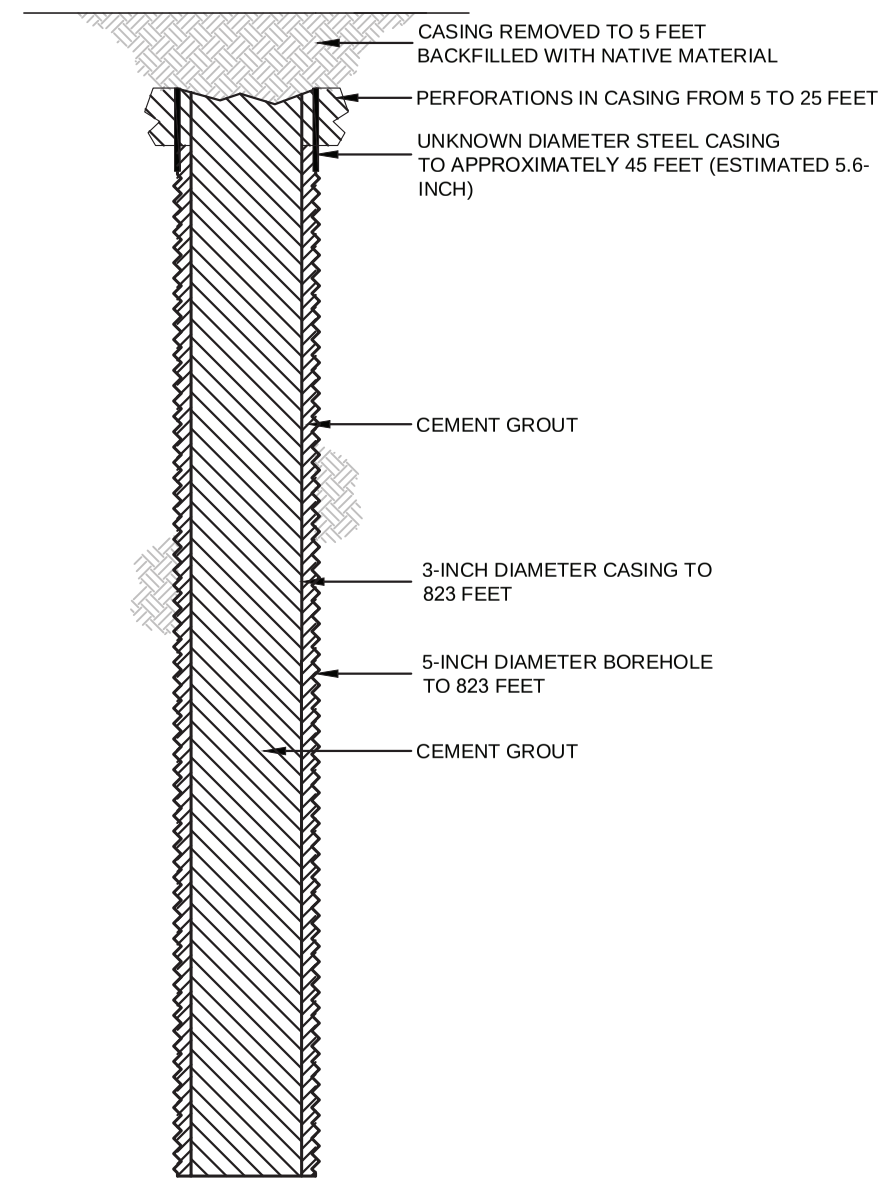

HALEY ALDRICH

FLORENCE COPPER, INC.
FLORENCE, ARIZONA

COREHOLE 442S DIAGRAM

FLORENCE COPPER INC.

NOT TO SCALE
SEPTEMBER 2019

FIGURE 1

MOBINI, GITA Printed: 4/21/2017 12:13 PM Layout: ABANDON (2)
G:\PROJECTS\CURIS RESOURCES\38706-CURIS FEASIBILITY\DRAWINGS\EPA\WELL\ABANDON\448S_ABANDON.DWG

OMB No. 2040-0042 Approval Expires 4/30/2022

United States Environmental Protection Agency

WELL REWORK RECORD, PLUGGING AND ABANDONMENT PLAN, OR PLUGGING AND ABANDONMENT AFFIDAVIT

Name and Address, Phone Number and/or Email of Permittee

Florence Copper Project
1575 W Hunt Hwy,
Florence, AZ 85132

Permit or EPA ID Number	API Number	Full Well Name
R9UIC-AZ3-FY11-1		443S

State	County
Arizona	Pinal

Locate well in two directions from nearest lines of quarter section and drilling unit

Latitude 33.05274287

Longitude -111.4374683

Surface Location

NW **1/4 of** SW **1/4 of Section** 28 **Township** 4S **Range** 9E

_____ **ft. from (N/S)** _____ **Line of quarter section**

_____ **ft. from (E/W)** _____ **Line of quarter section.**

Well Class	Timing of Action (pick one)	Type of Action (pick one)
☐ Class I ☐ Class II ☑ Class III ☐ Class V	☑ Notice Prior to Work Date Expected to Commence March 2021 ☐ Report After Work Date Work Ended	☐ Well Rework ☑ Plugging and Abandonment ☐ Conversion to a Non-Injection Well

Provide a narrative description of the work planned to be performed, or that was performed. Use additional pages as necessary. See instructions.

A workover rig capable of performing the required abandonment operations at the required depths will be moved in and set up over the core hole. The core hole will be inspected to determine the depth to which the hole remains open and if any obstructions are present in the core hole; the presence and condition of any existing collar will also be documented. If necessary, the core hole will be cleaned out to a depth of at least 100 feet below the bedrock-LBFU contact to enable placement of cement seals.

If collar is present, an attempt will be made to remove it. If removal of the collar is not feasible, it will be left in the hole and perforated as needed to allow an annular seal to be placed to a depth of at least 25 feet bgs. In areas of agricultural use, the surface casing will be cut at least 5 feet bgs and removed.

If the collar cannot be removed, it will be perforated from at least 20 feet below the bedrock-LBFU contact to at least 20 feet above the contact; from at least 20 feet below the base of the MFGU to at least 20 feet above the top of the MFGU; and from at least 25 feet bgs to 5 feet bgs.

A tremie pipe will be used to place Type V cement in the open core hole from the bottom of the core hole to the top of the core hole. Cement retainers, as described above, will be used to force cement grout into the annulus and behind perforated intervals, as necessary.

If the hole has been obstructed, as much cement as possible will be placed from 100 feet below the LBFU-bedrock contact to the top of the core hole.

The volume of Type V cement will be recorded and will not be less than the estimated volume of material required to fill each interval. All cement grout will consist of Type V cement, or equivalent approved in accordance with the UIC Permit.

Certification

I certify under the penalty of law that I have personally examined and am familiar with the information submitted in this document and all attachments and that, based on my inquiry of those individuals immediately responsible for obtaining the information, I believe that the information is true, accurate, and complete. I am aware that there are significant penalties for submitting false information, including the possibliity of fine and imprisonment. (Ref. 40 CFR § 144.32)

Name and Official Title *(Please type or print)*	Signature	Date Signed
Dan Johnson, VP - General Manager		10/3/2019

INSTRUCTIONS FOR FORM 7520-19

This form replaces forms 7520-12 and 7520-14. Use this form only when work is planned or has occurred that affects the well's construction or operation as an injection well, including work on the casing, tubing or packer (or for shallow Class V wells, the subsurface fluid emplacement network). Use one form per injection well. While reports or other information developed by contractors or service companies may be attached, this form must be signed by a responsible entity as described at 40 CFR 144.32. Note: operators closing Class V wells should use Form 7520-17.

NAME, ADDRESS, PHONE AND/OR EMAIL OF PERMITTEE: Enter the name and street address, city/town, state, and ZIP code of the permittee. Also provide an email address (if available) and/or a phone number.

PERMIT OR EPA ID NUMBER: Enter the well identification number or permit number assigned to the well by the EPA or the permitting authority.

API NUMBER: Enter the number assigned by the local jurisdiction (usually a State Oil and Gas Agency) using the American Petroleum Institute standard numbering system.

FULL WELL NAME: Enter the full name of the well or project.

Enter the **STATE** and **COUNTY** where the well is located. For States that do not have counties, use the name of that State's equivalent jurisdiction at a more local level.

WELL LOCATION: Fill in the complete township, range, and section to the nearest quarter-quarter section. A township is north or south of the baseline, and a range is east or west of the principal meridian (e.g., T12N, R34W). Also include the distance, in feet, from the nearest north or south line and nearest east or west line of the quarter-section. Also, enter the **latitude** and **longitude** of the well in decimal degrees, to five or six places if possible; be sure to include a negative sign for the longitude of a well in the Western Hemisphere and a negative sign for the latitude of a well in the Southern Hemisphere.

Enter the **WELL CLASS,** i.e., the class of injection well as defined in 40 CFR 144.6.

TIMING OF THE ACTION: Check ***Notice prior to work*** if the activity has not yet occurred (i.e., is planned). Check ***Report after work*** if the activity described has already occurred. As appropriate, include the date the activity is expected to start or the date the activity was completed. (Note this may not be available, e.g., for a plugging plan submitted with a permit application.)

TYPE OF ACTION: Check the appropriate box to describe the kind of activity being reported. Check ***Well Rework*** for work that was/will be performed on the well after it has already been in operation as an injection well. Check ***Plugging and Abandonment*** to report on plans for or descriptions of final closure/plugging after use as an injection well. Check ***Conversion to a Non-Injection Well*** if the well is to be converted to something other than an injection well.

Provide a **NARRATIVE DESCRIPTION** of the work planned to be performed, or that was performed. The narrative should include a description of the main procedures planned or that occurred during the work activity. A service company report, daily report, or similar document may be attached if it includes all the requested information and is clear and legible.

For well reworks, include the following information: The reason for the well rework; depths of activity; type of activity; changes to injection well configuration, well casing, or cement behind casing; any plug added to the well and its depth; any newly drilled interval and its depth; method(s) to demonstrate that the well has mechanical integrity (as applicable); and any deviations from the approved rework plan (as applicable).

For a well plugging plan, include the following information: Reason for the well plugging; number of plugs placed, and their depths; materials used as plugs (e.g., cast iron bridge plug, cement, cement retainer); method to set plugs; and wait-on-cement times, if any. Also provide one or more cost estimates from an independent firm in the business of plugging and abandoning wells to plug the well as described in the plan.

For well plugging affidavit, include the following information: Reason for the well plugging; number of plugs placed, and their depths; materials used as plugs (e.g., cast iron bridge plug, cement, cement retainer); method to set plugs; wait-on-cement times, if any; and any deviations from the approved plugging plan (if applicable).

For conversion to a non-injection well, include the following information: Depths of activity; type of activity; changes to injection well configuration, well casing, or cement behind casing; any plug added to the well and its depth; any newly drilled interval and its depth; depths of new perforations; and method(s) to demonstrate that the well has mechanical integrity (as applicable).

For all of the above activities, include a well sketch depicting the work, results of well tests/logging performed, service company tickets, and any other available information demonstrating how the work was/is to be performed. Also, specify whether depths are below ground surface, relative to Kelly bushing, etc.

CERTIFICATION: This form must be signed and dated by either: a responsible corporate officer for a corporation, by a general partner for a partnership, by the proprietor of a sole proprietorship, or by a principal executive or ranking elected official for a public agency.

PAPERWORK REDUCTION ACT NOTICE: The public reporting and recordkeeping burden for this collection of information is estimated to average between 6.0 and 7.9 hours per response, depending on the injection well class. Burden means the total time, effort, or financial resource expended by persons to generate, maintain, retain, or disclose or provide information to or for a Federal Agency. This includes the time needed to review instructions; develop, acquire, install, and utilize technology and systems for the purposes of collecting, validating, and verifying information, processing and maintaining information, and disclosing and providing information; adjust the existing ways to comply with any previously applicable instructions and requirements; train personnel to be able to respond to the collection of information; search data sources; complete and review the collection of information; and, transmit or otherwise disclose the information. An agency may not conduct or sponsor, and a person is not required to respond to, a collection of information unless it displays a currently valid OMB control number. Send comments on the Agency's need for this information, the accuracy of the provided burden estimates, and any suggested methods for minimizing respondent burden, including the use of automated collection techniques to Director, Collection Strategies Division, U.S. Environmental Protection Agency (2822), 1200 Pennsylvania Ave., NW., Washington, D.C. 20460. Include the OMB control number in any correspondence. Do not send the completed forms to this address.

AS-BUILT COREHOLE 443S

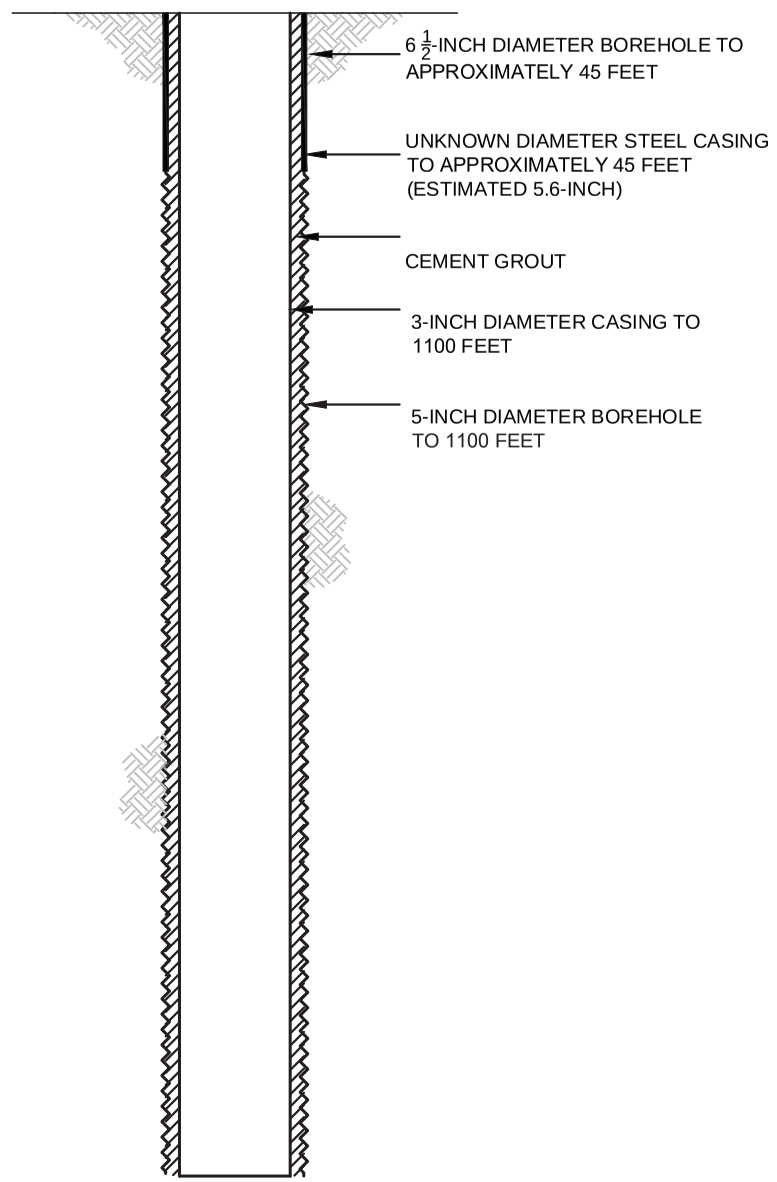

PROPOSED PLUGGING AND ABANDONMENT COREHOLE 443S

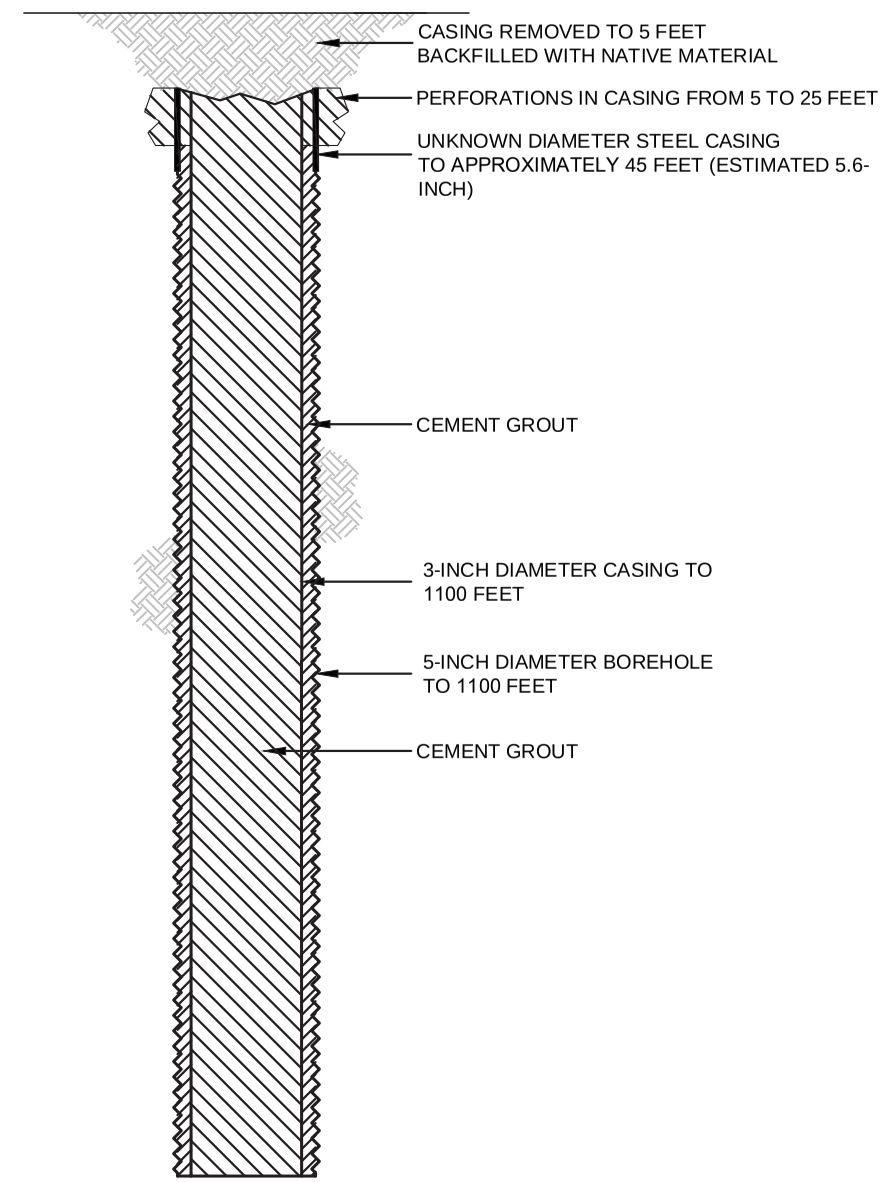

HALEY ALDRICH

FLORENCE COPPER, INC.
FLORENCE, ARIZONA

COREHOLE 443S DIAGRAM

FLORENCE COPPER INC.

NOT TO SCALE
SEPTEMBER 2019

FIGURE 1

MOBINI, GITA Printed: 4/21/2017 12:13 PM Layout: ABANDON (2)
G:\PROJECTS\CURIS RESOURCES\38706-CURIS FEASIBILITY\DRAWINGS\EPA\WELL\ABANDON\448S_ABANDON.DWG

OMB No. 2040-0042 Approval Expires 4/30/2022

United States Environmental Protection Agency

WELL REWORK RECORD, PLUGGING AND ABANDONMENT PLAN, OR PLUGGING AND ABANDONMENT AFFIDAVIT

Name and Address, Phone Number and/or Email of Permittee

Florence Copper Project
1575 W Hunt Hwy,
Florence, AZ 85132

Permit or EPA ID Number	API Number	Full Well Name
R9UIC-AZ3-FY11-1		445S

State	County
Arizona	Pinal

Locate well in two directions from nearest lines of quarter section and drilling unit

Latitude 33.0521431

Longitude -111.4362477

Surface Location

NW **1/4 of** SW **1/4 of Section** 28 **Township** 4S **Range** 9E

_____ **ft. from (N/S)** _____ **Line of quarter section**

_____ **ft. from (E/W)** _____ **Line of quarter section.**

Well Class	Timing of Action (pick one)	Type of Action (pick one)
☐ Class I ☐ Class II ☑ Class III ☐ Class V	☑ Notice Prior to Work Date Expected to Commence March 2021 ☐ Report After Work Date Work Ended	☐ Well Rework ☑ Plugging and Abandonment ☐ Conversion to a Non-Injection Well

Provide a narrative description of the work planned to be performed, or that was performed. Use additional pages as necessary. See instructions.

A workover rig capable of performing the required abandonment operations at the required depths will be moved in and set up over the core hole. The core hole will be inspected to determine the depth to which the hole remains open and if any obstructions are present in the core hole; the presence and condition of any existing collar will also be documented. If necessary, the core hole will be cleaned out to a depth of at least 100 feet below the bedrock-LBFU contact to enable placement of cement seals.

If collar is present, an attempt will be made to remove it. If removal of the collar is not feasible, it will be left in the hole and perforated as needed to allow an annular seal to be placed to a depth of at least 25 feet bgs. In areas of agricultural use, the surface casing will be cut at least 5 feet bgs and removed.

If the collar cannot be removed, it will be perforated from at least 20 feet below the bedrock-LBFU contact to at least 20 feet above the contact; from at least 20 feet below the base of the MFGU to at least 20 feet above the top of the MFGU; and from at least 25 feet bgs to 5 feet bgs.

A tremie pipe will be used to place Type V cement in the open core hole from the bottom of the core hole to the top of the core hole. Cement retainers, as described above, will be used to force cement grout into the annulus and behind perforated intervals, as necessary.

If the hole has been obstructed, as much cement as possible will be placed from 100 feet below the LBFU-bedrock contact to the top of the core hole.

The volume of Type V cement will be recorded and will not be less than the estimated volume of material required to fill each interval. All cement grout will consist of Type V cement, or equivalent approved in accordance with the UIC Permit.

Certification

I certify under the penalty of law that I have personally examined and am familiar with the information submitted in this document and all attachments and that, based on my inquiry of those individuals immediately responsible for obtaining the information, I believe that the information is true, accurate, and complete. I am aware that there are significant penalties for submitting false information, including the possibliity of fine and imprisonment. (Ref. 40 CFR § 144.32)

Name and Official Title *(Please type or print)*	Signature	Date Signed
Dan Johnson, VP - General Manager		10/3/2019

INSTRUCTIONS FOR FORM 7520-19

This form replaces forms 7520-12 and 7520-14. Use this form only when work is planned or has occurred that affects the well's construction or operation as an injection well, including work on the casing, tubing or packer (or for shallow Class V wells, the subsurface fluid emplacement network). Use one form per injection well. While reports or other information developed by contractors or service companies may be attached, this form must be signed by a responsible entity as described at 40 CFR 144.32. Note: operators closing Class V wells should use Form 7520-17.

NAME, ADDRESS, PHONE AND/OR EMAIL OF PERMITTEE: Enter the name and street address, city/town, state, and ZIP code of the permittee. Also provide an email address (if available) and/or a phone number.

PERMIT OR EPA ID NUMBER: Enter the well identification number or permit number assigned to the well by the EPA or the permitting authority.

API NUMBER: Enter the number assigned by the local jurisdiction (usually a State Oil and Gas Agency) using the American Petroleum Institute standard numbering system.

FULL WELL NAME: Enter the full name of the well or project.

Enter the **STATE** and **COUNTY** where the well is located. For States that do not have counties, use the name of that State's equivalent jurisdiction at a more local level.

WELL LOCATION: Fill in the complete township, range, and section to the nearest quarter-quarter section. A township is north or south of the baseline, and a range is east or west of the principal meridian (e.g., T12N, R34W). Also include the distance, in feet, from the nearest north or south line and nearest east or west line of the quarter-section. Also, enter the **latitude** and **longitude** of the well in decimal degrees, to five or six places if possible; be sure to include a negative sign for the longitude of a well in the Western Hemisphere and a negative sign for the latitude of a well in the Southern Hemisphere.

Enter the **WELL CLASS,** i.e., the class of injection well as defined in 40 CFR 144.6.

TIMING OF THE ACTION: Check ***Notice prior to work*** if the activity has not yet occurred (i.e., is planned). Check ***Report after work*** if the activity described has already occurred. As appropriate, include the date the activity is expected to start or the date the activity was completed. (Note this may not be available, e.g., for a plugging plan submitted with a permit application.)

TYPE OF ACTION: Check the appropriate box to describe the kind of activity being reported. Check ***Well Rework*** for work that was/will be performed on the well after it has already been in operation as an injection well. Check ***Plugging and Abandonment*** to report on plans for or descriptions of final closure/plugging after use as an injection well. Check ***Conversion to a Non-Injection Well*** if the well is to be converted to something other than an injection well.

Provide a **NARRATIVE DESCRIPTION** of the work planned to be performed, or that was performed. The narrative should include a description of the main procedures planned or that occurred during the work activity. A service company report, daily report, or similar document may be attached if it includes all the requested information and is clear and legible.

For well reworks, include the following information: The reason for the well rework; depths of activity; type of activity; changes to injection well configuration, well casing, or cement behind casing; any plug added to the well and its depth; any newly drilled interval and its depth; method(s) to demonstrate that the well has mechanical integrity (as applicable); and any deviations from the approved rework plan (as applicable).

For a well plugging plan, include the following information: Reason for the well plugging; number of plugs placed, and their depths; materials used as plugs (e.g., cast iron bridge plug, cement, cement retainer); method to set plugs; and wait-on-cement times, if any. Also provide one or more cost estimates from an independent firm in the business of plugging and abandoning wells to plug the well as described in the plan.

For well plugging affidavit, include the following information: Reason for the well plugging; number of plugs placed, and their depths; materials used as plugs (e.g., cast iron bridge plug, cement, cement retainer); method to set plugs; wait-on-cement times, if any; and any deviations from the approved plugging plan (if applicable).

For conversion to a non-injection well, include the following information: Depths of activity; type of activity; changes to injection well configuration, well casing, or cement behind casing; any plug added to the well and its depth; any newly drilled interval and its depth; depths of new perforations; and method(s) to demonstrate that the well has mechanical integrity (as applicable).

For all of the above activities, include a well sketch depicting the work, results of well tests/logging performed, service company tickets, and any other available information demonstrating how the work was/is to be performed. Also, specify whether depths are below ground surface, relative to Kelly bushing, etc.

CERTIFICATION: This form must be signed and dated by either: a responsible corporate officer for a corporation, by a general partner for a partnership, by the proprietor of a sole proprietorship, or by a principal executive or ranking elected official for a public agency.

PAPERWORK REDUCTION ACT NOTICE: The public reporting and recordkeeping burden for this collection of information is estimated to average between 6.0 and 7.9 hours per response, depending on the injection well class. Burden means the total time, effort, or financial resource expended by persons to generate, maintain, retain, or disclose or provide information to or for a Federal Agency. This includes the time needed to review instructions; develop, acquire, install, and utilize technology and systems for the purposes of collecting, validating, and verifying information, processing and maintaining information, and disclosing and providing information; adjust the existing ways to comply with any previously applicable instructions and requirements; train personnel to be able to respond to the collection of information; search data sources; complete and review the collection of information; and, transmit or otherwise disclose the information. An agency may not conduct or sponsor, and a person is not required to respond to, a collection of information unless it displays a currently valid OMB control number. Send comments on the Agency's need for this information, the accuracy of the provided burden estimates, and any suggested methods for minimizing respondent burden, including the use of automated collection techniques to Director, Collection Strategies Division, U.S. Environmental Protection Agency (2822), 1200 Pennsylvania Ave., NW., Washington, D.C. 20460. Include the OMB control number in any correspondence. Do not send the completed forms to this address.

AS-BUILT COREHOLE 445S

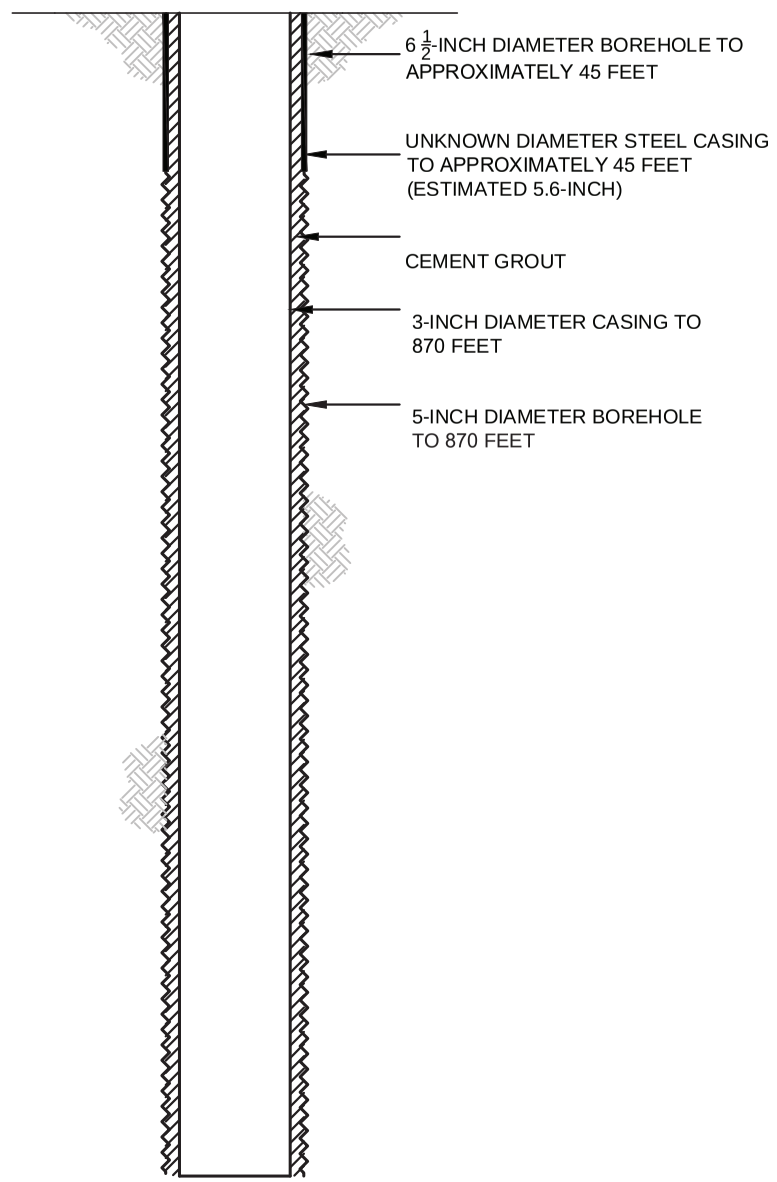

PROPOSED PLUGGING AND ABANDONMENT COREHOLE 445S

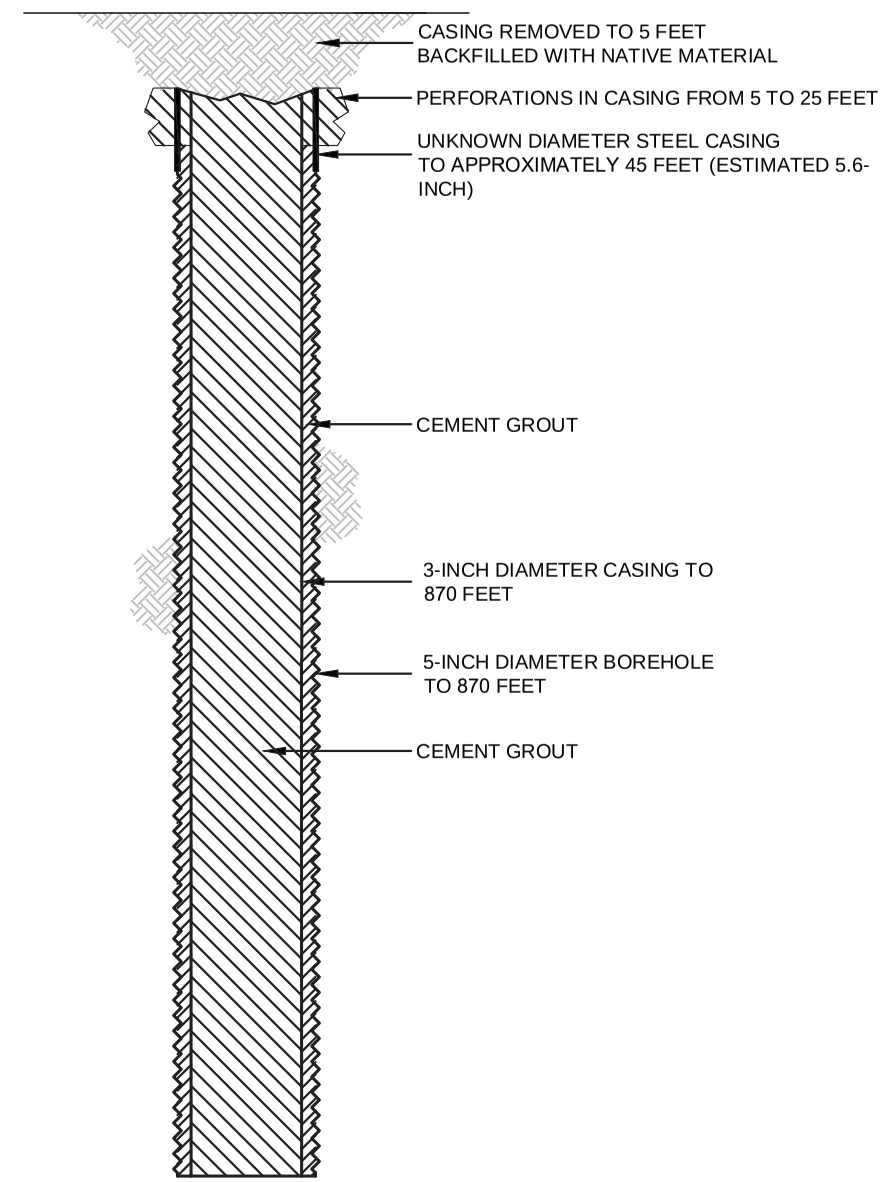

HALEY ALDRICH

FLORENCE COPPER, INC.
FLORENCE, ARIZONA

COREHOLE 445S DIAGRAM

FLORENCE COPPER INC.

NOT TO SCALE
SEPTEMBER 2019

FIGURE 1

MOBINI, GITA
Printed: 4/21/2017 12:13 PM Layout: ABANDON (2)
G:\PROJECTS\CURIS RESOURCES\38706-CURIS FEASIBILITY\DRAWINGS\EPA\WELL\ABANDON\448S_ABANDON.DWG

OMB No. 2040-0042 Approval Expires 4/30/2022

United States Environmental Protection Agency

WELL REWORK RECORD, PLUGGING AND ABANDONMENT PLAN, OR PLUGGING AND ABANDONMENT AFFIDAVIT

Name and Address, Phone Number and/or Email of Permittee

Florence Copper Project
1575 W Hunt Hwy,
Florence, AZ 85132

Permit or EPA ID Number	API Number	Full Well Name
R9UIC-AZ3-FY11-1		446S

State	County
Arizona	Pinal

Locate well in two directions from nearest lines of quarter section and drilling unit

Latitude 33.0521368

Longitude -111.4346159

Surface Location

NW **1/4 of** SW **1/4 of Section** 28 **Township** 4S **Range** 9E

_____ **ft. from (N/S)** _____ **Line of quarter section**

_____ **ft. from (E/W)** _____ **Line of quarter section.**

Well Class	Timing of Action (pick one)	Type of Action (pick one)
☐ Class I ☐ Class II ☑ Class III ☐ Class V	☑ Notice Prior to Work Date Expected to Commence March 2021 ☐ Report After Work Date Work Ended	☐ Well Rework ☑ Plugging and Abandonment ☐ Conversion to a Non-Injection Well

Provide a narrative description of the work planned to be performed, or that was performed. Use additional pages as necessary. See instructions.

A workover rig capable of performing the required abandonment operations at the required depths will be moved in and set up over the core hole. The core hole will be inspected to determine the depth to which the hole remains open and if any obstructions are present in the core hole; the presence and condition of any existing collar will also be documented. If necessary, the core hole will be cleaned out to a depth of at least 100 feet below the bedrock-LBFU contact to enable placement of cement seals.

If collar is present, an attempt will be made to remove it. If removal of the collar is not feasible, it will be left in the hole and perforated as needed to allow an annular seal to be placed to a depth of at least 25 feet bgs. In areas of agricultural use, the surface casing will be cut at least 5 feet bgs and removed.

If the collar cannot be removed, it will be perforated from at least 20 feet below the bedrock-LBFU contact to at least 20 feet above the contact; from at least 20 feet below the base of the MFGU to at least 20 feet above the top of the MFGU; and from at least 25 feet bgs to 5 feet bgs.

A tremie pipe will be used to place Type V cement in the open core hole from the bottom of the core hole to the top of the core hole. Cement retainers, as described above, will be used to force cement grout into the annulus and behind perforated intervals, as necessary.

If the hole has been obstructed, as much cement as possible will be placed from 100 feet below the LBFU-bedrock contact to the top of the core hole.

The volume of Type V cement will be recorded and will not be less than the estimated volume of material required to fill each interval. All cement grout will consist of Type V cement, or equivalent approved in accordance with the UIC Permit.

Certification

I certify under the penalty of law that I have personally examined and am familiar with the information submitted in this document and all attachments and that, based on my inquiry of those individuals immediately responsible for obtaining the information, I believe that the information is true, accurate, and complete. I am aware that there are significant penalties for submitting false information, including the possibliity of fine and imprisonment. (Ref. 40 CFR § 144.32)

Name and Official Title *(Please type or print)*	Signature	Date Signed
Dan Johnson, VP - General Manager		10/3/2019

INSTRUCTIONS FOR FORM 7520-19

This form replaces forms 7520-12 and 7520-14. Use this form only when work is planned or has occurred that affects the well's construction or operation as an injection well, including work on the casing, tubing or packer (or for shallow Class V wells, the subsurface fluid emplacement network). Use one form per injection well. While reports or other information developed by contractors or service companies may be attached, this form must be signed by a responsible entity as described at 40 CFR 144.32. Note: operators closing Class V wells should use Form 7520-17.

NAME, ADDRESS, PHONE AND/OR EMAIL OF PERMITTEE: Enter the name and street address, city/town, state, and ZIP code of the permittee. Also provide an email address (if available) and/or a phone number.

PERMIT OR EPA ID NUMBER: Enter the well identification number or permit number assigned to the well by the EPA or the permitting authority.

API NUMBER: Enter the number assigned by the local jurisdiction (usually a State Oil and Gas Agency) using the American Petroleum Institute standard numbering system.

FULL WELL NAME: Enter the full name of the well or project.

Enter the **STATE** and **COUNTY** where the well is located. For States that do not have counties, use the name of that State's equivalent jurisdiction at a more local level.

WELL LOCATION: Fill in the complete township, range, and section to the nearest quarter-quarter section. A township is north or south of the baseline, and a range is east or west of the principal meridian (e.g., T12N, R34W). Also include the distance, in feet, from the nearest north or south line and nearest east or west line of the quarter-section. Also, enter the **latitude** and **longitude** of the well in decimal degrees, to five or six places if possible; be sure to include a negative sign for the longitude of a well in the Western Hemisphere and a negative sign for the latitude of a well in the Southern Hemisphere.

Enter the **WELL CLASS,** i.e., the class of injection well as defined in 40 CFR 144.6.

TIMING OF THE ACTION: Check ***Notice prior to work*** if the activity has not yet occurred (i.e., is planned). Check ***Report after work*** if the activity described has already occurred. As appropriate, include the date the activity is expected to start or the date the activity was completed. (Note this may not be available, e.g., for a plugging plan submitted with a permit application.)

TYPE OF ACTION: Check the appropriate box to describe the kind of activity being reported. Check ***Well Rework*** for work that was/will be performed on the well after it has already been in operation as an injection well. Check ***Plugging and Abandonment*** to report on plans for or descriptions of final closure/plugging after use as an injection well. Check ***Conversion to a Non-Injection Well*** if the well is to be converted to something other than an injection well.

Provide a **NARRATIVE DESCRIPTION** of the work planned to be performed, or that was performed. The narrative should include a description of the main procedures planned or that occurred during the work activity. A service company report, daily report, or similar document may be attached if it includes all the requested information and is clear and legible.

For well reworks, include the following information: The reason for the well rework; depths of activity; type of activity; changes to injection well configuration, well casing, or cement behind casing; any plug added to the well and its depth; any newly drilled interval and its depth; method(s) to demonstrate that the well has mechanical integrity (as applicable); and any deviations from the approved rework plan (as applicable).

For a well plugging plan, include the following information: Reason for the well plugging; number of plugs placed, and their depths; materials used as plugs (e.g., cast iron bridge plug, cement, cement retainer); method to set plugs; and wait-on-cement times, if any. Also provide one or more cost estimates from an independent firm in the business of plugging and abandoning wells to plug the well as described in the plan.

For well plugging affidavit, include the following information: Reason for the well plugging; number of plugs placed, and their depths; materials used as plugs (e.g., cast iron bridge plug, cement, cement retainer); method to set plugs; wait-on-cement times, if any; and any deviations from the approved plugging plan (if applicable).

For conversion to a non-injection well, include the following information: Depths of activity; type of activity; changes to injection well configuration, well casing, or cement behind casing; any plug added to the well and its depth; any newly drilled interval and its depth; depths of new perforations; and method(s) to demonstrate that the well has mechanical integrity (as applicable).

For all of the above activities, include a well sketch depicting the work, results of well tests/logging performed, service company tickets, and any other available information demonstrating how the work was/is to be performed. Also, specify whether depths are below ground surface, relative to Kelly bushing, etc.

CERTIFICATION: This form must be signed and dated by either: a responsible corporate officer for a corporation, by a general partner for a partnership, by the proprietor of a sole proprietorship, or by a principal executive or ranking elected official for a public agency.

PAPERWORK REDUCTION ACT NOTICE: The public reporting and recordkeeping burden for this collection of information is estimated to average between 6.0 and 7.9 hours per response, depending on the injection well class. Burden means the total time, effort, or financial resource expended by persons to generate, maintain, retain, or disclose or provide information to or for a Federal Agency. This includes the time needed to review instructions; develop, acquire, install, and utilize technology and systems for the purposes of collecting, validating, and verifying information, processing and maintaining information, and disclosing and providing information; adjust the existing ways to comply with any previously applicable instructions and requirements; train personnel to be able to respond to the collection of information; search data sources; complete and review the collection of information; and, transmit or otherwise disclose the information. An agency may not conduct or sponsor, and a person is not required to respond to, a collection of information unless it displays a currently valid OMB control number. Send comments on the Agency's need for this information, the accuracy of the provided burden estimates, and any suggested methods for minimizing respondent burden, including the use of automated collection techniques to Director, Collection Strategies Division, U.S. Environmental Protection Agency (2822), 1200 Pennsylvania Ave., NW., Washington, D.C. 20460. Include the OMB control number in any correspondence. Do not send the completed forms to this address.

AS-BUILT COREHOLE 446S

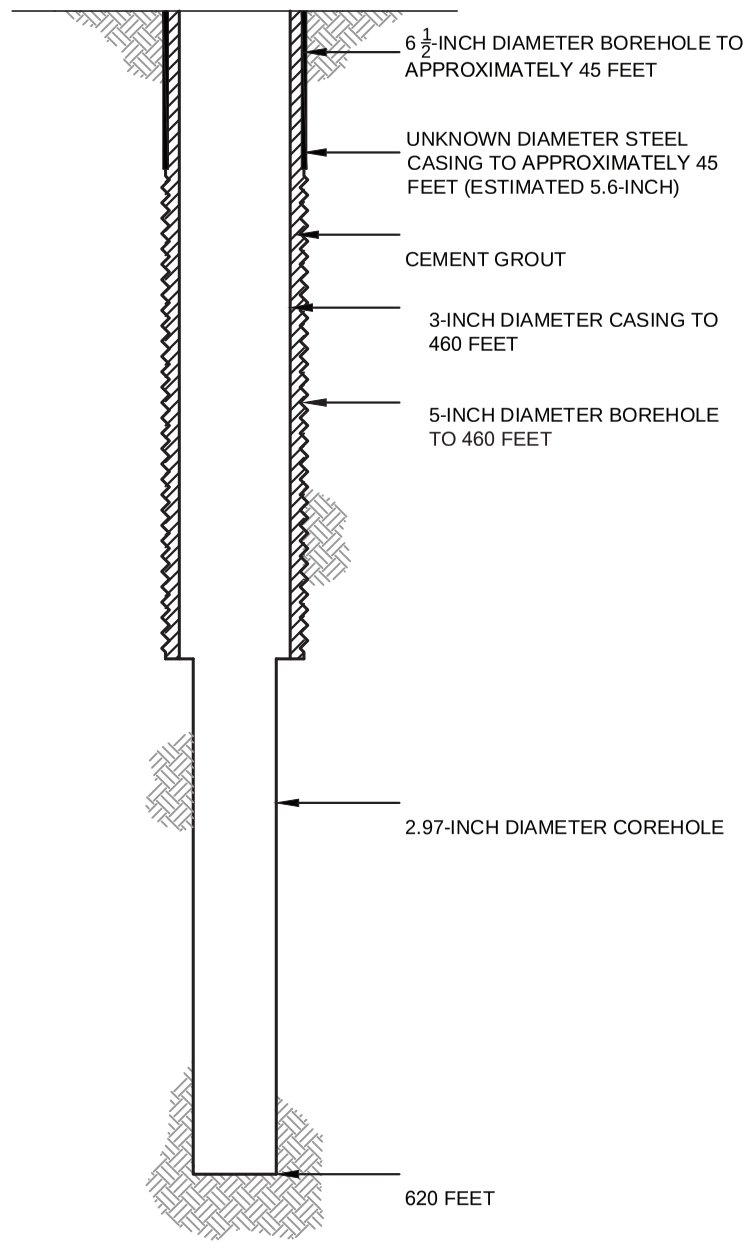

PROPOSED PLUGGING AND ABANDONMENT COREHOLE 446S

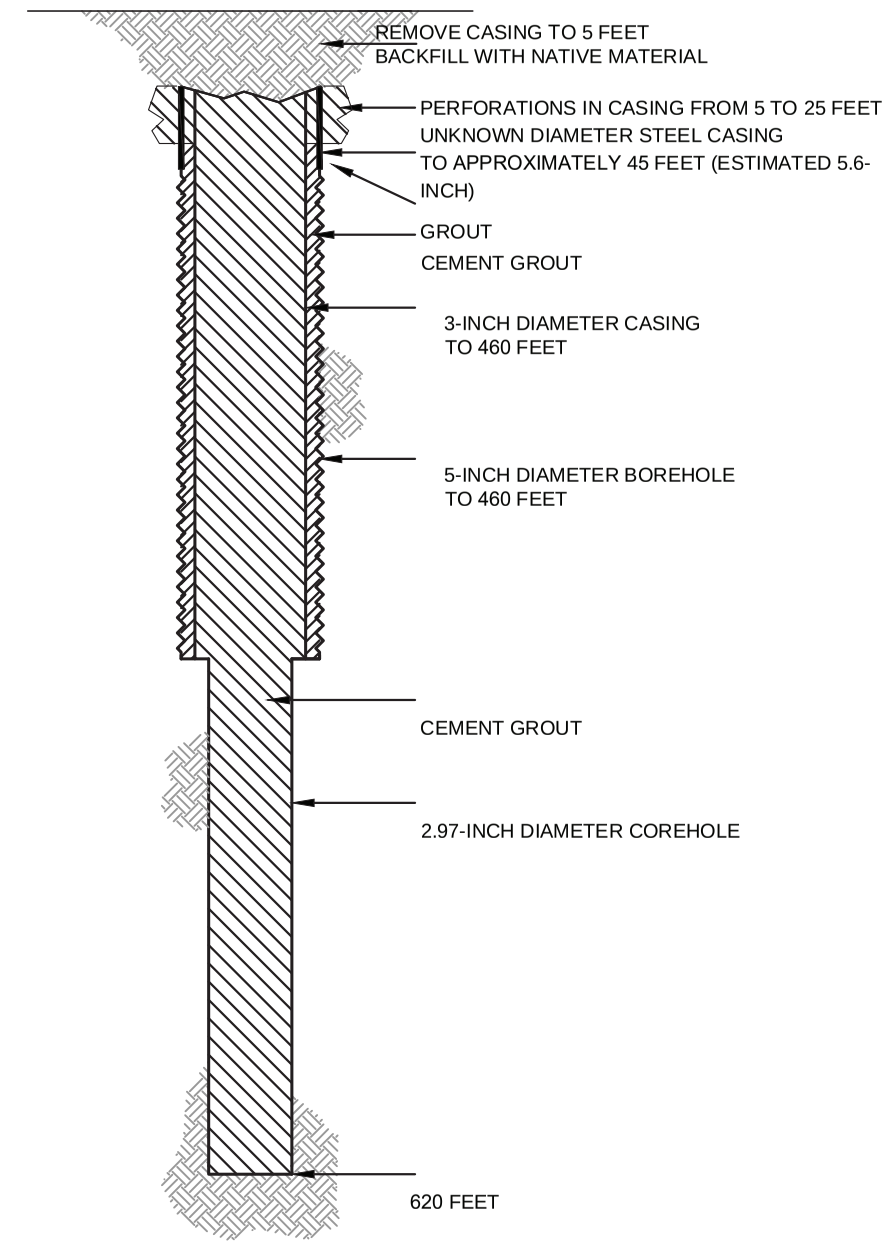

HALEY ALDRICH

FLORENCE COPPER, INC.
FLORENCE, ARIZONA

COREHOLE 446S DIAGRAM

FLORENCE COPPER INC.

NOT TO SCALE
SEPTEMBER 2019

FIGURE 1

MOBINI, GITA Printed: 4/21/2017 12:00 PM Layout: ABANDON (2)
\PROJECTS\CURIS RESOURCES38706-CURIS FEASIBILITY\DRAWINGS\EPA\WELL ABANDON\415S_ABANDON.DWG

OMB No. 2040-0042 Approval Expires 4/30/2022

United States Environmental Protection Agency

WELL REWORK RECORD, PLUGGING AND ABANDONMENT PLAN, OR PLUGGING AND ABANDONMENT AFFIDAVIT

Name and Address, Phone Number and/or Email of Permittee

Florence Copper Project
1575 W Hunt Hwy,
Florence, AZ 85132

Permit or EPA ID Number	API Number	Full Well Name
R9UIC-AZ3-FY11-1		449S

State	County
Arizona	Pinal

Locate well in two directions from nearest lines of quarter section and drilling unit

Surface Location

NW 1/4 of SW 1/4 of Section 28 Township 4S Range 9E

Latitude 33.05154509

Longitude -111.435843

ft. from (N/S) Line of quarter section

ft. from (E/W) Line of quarter section.

Well Class	Timing of Action (pick one)	Type of Action (pick one)
☐ Class I ☐ Class II ☑ Class III ☐ Class V	☑ Notice Prior to Work Date Expected to Commence March 2021 ☐ Report After Work Date Work Ended	☐ Well Rework ☑ Plugging and Abandonment ☐ Conversion to a Non-Injection Well

Provide a narrative description of the work planned to be performed, or that was performed. Use additional pages as necessary. See instructions.

A workover rig capable of performing the required abandonment operations at the required depths will be moved in and set up over the core hole. The core hole will be inspected to determine the depth to which the hole remains open and if any obstructions are present in the core hole; the presence and condition of any existing collar will also be documented. If necessary, the core hole will be cleaned out to a depth of at least 100 feet below the bedrock-LBFU contact to enable placement of cement seals.

If collar is present, an attempt will be made to remove it. If removal of the collar is not feasible, it will be left in the hole and perforated as needed to allow an annular seal to be placed to a depth of at least 25 feet bgs. In areas of agricultural use, the surface casing will be cut at least 5 feet bgs and removed.

If the collar cannot be removed, it will be perforated from at least 20 feet below the bedrock-LBFU contact to at least 20 feet above the contact; from at least 20 feet below the base of the MFGU to at least 20 feet above the top of the MFGU; and from at least 25 feet bgs to 5 feet bgs.

A tremie pipe will be used to place Type V cement in the open core hole from the bottom of the core hole to the top of the core hole. Cement retainers, as described above, will be used to force cement grout into the annulus and behind perforated intervals, as necessary.

If the hole has been obstructed, as much cement as possible will be placed from 100 feet below the LBFU-bedrock contact to the top of the core hole.

The volume of Type V cement will be recorded and will not be less than the estimated volume of material required to fill each interval. All cement grout will consist of Type V cement, or equivalent approved in accordance with the UIC Permit.

Certification

I certify under the penalty of law that I have personally examined and am familiar with the information submitted in this document and all attachments and that, based on my inquiry of those individuals immediately responsible for obtaining the information, I believe that the information is true, accurate, and complete. I am aware that there are significant penalties for submitting false information, including the possibliity of fine and imprisonment. (Ref. 40 CFR § 144.32)

Name and Official Title *(Please type or print)*	Signature	Date Signed
Dan Johnson, VP - General Manager		10/3/2019

INSTRUCTIONS FOR FORM 7520-19

This form replaces forms 7520-12 and 7520-14. Use this form only when work is planned or has occurred that affects the well's construction or operation as an injection well, including work on the casing, tubing or packer (or for shallow Class V wells, the subsurface fluid emplacement network). Use one form per injection well. While reports or other information developed by contractors or service companies may be attached, this form must be signed by a responsible entity as described at 40 CFR 144.32. Note: operators closing Class V wells should use Form 7520-17.

NAME, ADDRESS, PHONE AND/OR EMAIL OF PERMITTEE: Enter the name and street address, city/town, state, and ZIP code of the permittee. Also provide an email address (if available) and/or a phone number.

PERMIT OR EPA ID NUMBER: Enter the well identification number or permit number assigned to the well by the EPA or the permitting authority.

API NUMBER: Enter the number assigned by the local jurisdiction (usually a State Oil and Gas Agency) using the American Petroleum Institute standard numbering system.

FULL WELL NAME: Enter the full name of the well or project.

Enter the **STATE** and **COUNTY** where the well is located. For States that do not have counties, use the name of that State's equivalent jurisdiction at a more local level.

WELL LOCATION: Fill in the complete township, range, and section to the nearest quarter-quarter section. A township is north or south of the baseline, and a range is east or west of the principal meridian (e.g., T12N, R34W). Also include the distance, in feet, from the nearest north or south line and nearest east or west line of the quarter-section. Also, enter the **latitude** and **longitude** of the well in decimal degrees, to five or six places if possible; be sure to include a negative sign for the longitude of a well in the Western Hemisphere and a negative sign for the latitude of a well in the Southern Hemisphere.

Enter the **WELL CLASS,** i.e., the class of injection well as defined in 40 CFR 144.6.

TIMING OF THE ACTION: Check ***Notice prior to work*** if the activity has not yet occurred (i.e., is planned). Check ***Report after work*** if the activity described has already occurred. As appropriate, include the date the activity is expected to start or the date the activity was completed. (Note this may not be available, e.g., for a plugging plan submitted with a permit application.)

TYPE OF ACTION: Check the appropriate box to describe the kind of activity being reported. Check ***Well Rework*** for work that was/will be performed on the well after it has already been in operation as an injection well. Check ***Plugging and Abandonment*** to report on plans for or descriptions of final closure/plugging after use as an injection well. Check ***Conversion to a Non-Injection Well*** if the well is to be converted to something other than an injection well.

Provide a **NARRATIVE DESCRIPTION** of the work planned to be performed, or that was performed. The narrative should include a description of the main procedures planned or that occurred during the work activity. A service company report, daily report, or similar document may be attached if it includes all the requested information and is clear and legible.

For well reworks, include the following information: The reason for the well rework; depths of activity; type of activity; changes to injection well configuration, well casing, or cement behind casing; any plug added to the well and its depth; any newly drilled interval and its depth; method(s) to demonstrate that the well has mechanical integrity (as applicable); and any deviations from the approved rework plan (as applicable).

For a well plugging plan, include the following information: Reason for the well plugging; number of plugs placed, and their depths; materials used as plugs (e.g., cast iron bridge plug, cement, cement retainer); method to set plugs; and wait-on-cement times, if any. Also provide one or more cost estimates from an independent firm in the business of plugging and abandoning wells to plug the well as described in the plan.

For well plugging affidavit, include the following information: Reason for the well plugging; number of plugs placed, and their depths; materials used as plugs (e.g., cast iron bridge plug, cement, cement retainer); method to set plugs; wait-on-cement times, if any; and any deviations from the approved plugging plan (if applicable).

For conversion to a non-injection well, include the following information: Depths of activity; type of activity; changes to injection well configuration, well casing, or cement behind casing; any plug added to the well and its depth; any newly drilled interval and its depth; depths of new perforations; and method(s) to demonstrate that the well has mechanical integrity (as applicable).

For all of the above activities, include a well sketch depicting the work, results of well tests/logging performed, service company tickets, and any other available information demonstrating how the work was/is to be performed. Also, specify whether depths are below ground surface, relative to Kelly bushing, etc.

CERTIFICATION: This form must be signed and dated by either: a responsible corporate officer for a corporation, by a general partner for a partnership, by the proprietor of a sole proprietorship, or by a principal executive or ranking elected official for a public agency.

PAPERWORK REDUCTION ACT NOTICE: The public reporting and recordkeeping burden for this collection of information is estimated to average between 6.0 and 7.9 hours per response, depending on the injection well class. Burden means the total time, effort, or financial resource expended by persons to generate, maintain, retain, or disclose or provide information to or for a Federal Agency. This includes the time needed to review instructions; develop, acquire, install, and utilize technology and systems for the purposes of collecting, validating, and verifying information, processing and maintaining information, and disclosing and providing information; adjust the existing ways to comply with any previously applicable instructions and requirements; train personnel to be able to respond to the collection of information; search data sources; complete and review the collection of information; and, transmit or otherwise disclose the information. An agency may not conduct or sponsor, and a person is not required to respond to, a collection of information unless it displays a currently valid OMB control number. Send comments on the Agency's need for this information, the accuracy of the provided burden estimates, and any suggested methods for minimizing respondent burden, including the use of automated collection techniques to Director, Collection Strategies Division, U.S. Environmental Protection Agency (2822), 1200 Pennsylvania Ave., NW., Washington, D.C. 20460. Include the OMB control number in any correspondence. Do not send the completed forms to this address.

AS-BUILT COREHOLE 449S

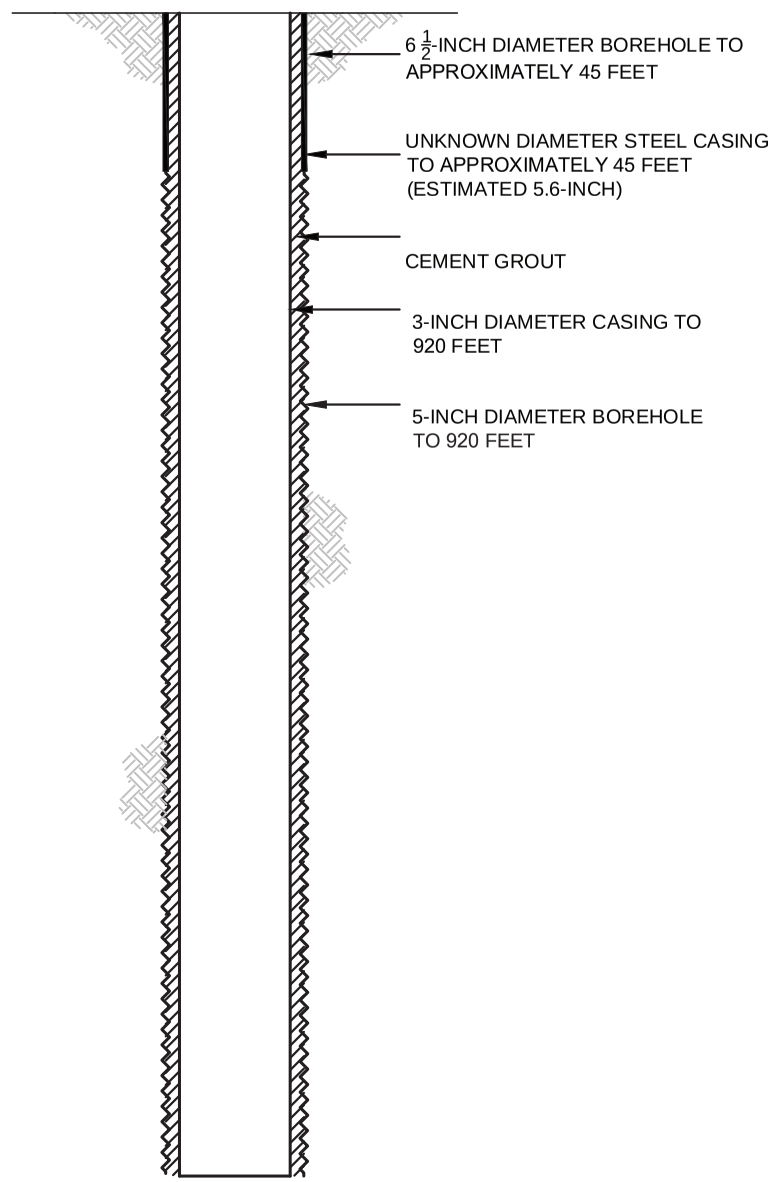

PROPOSED PLUGGING AND ABANDONMENT COREHOLE 449S

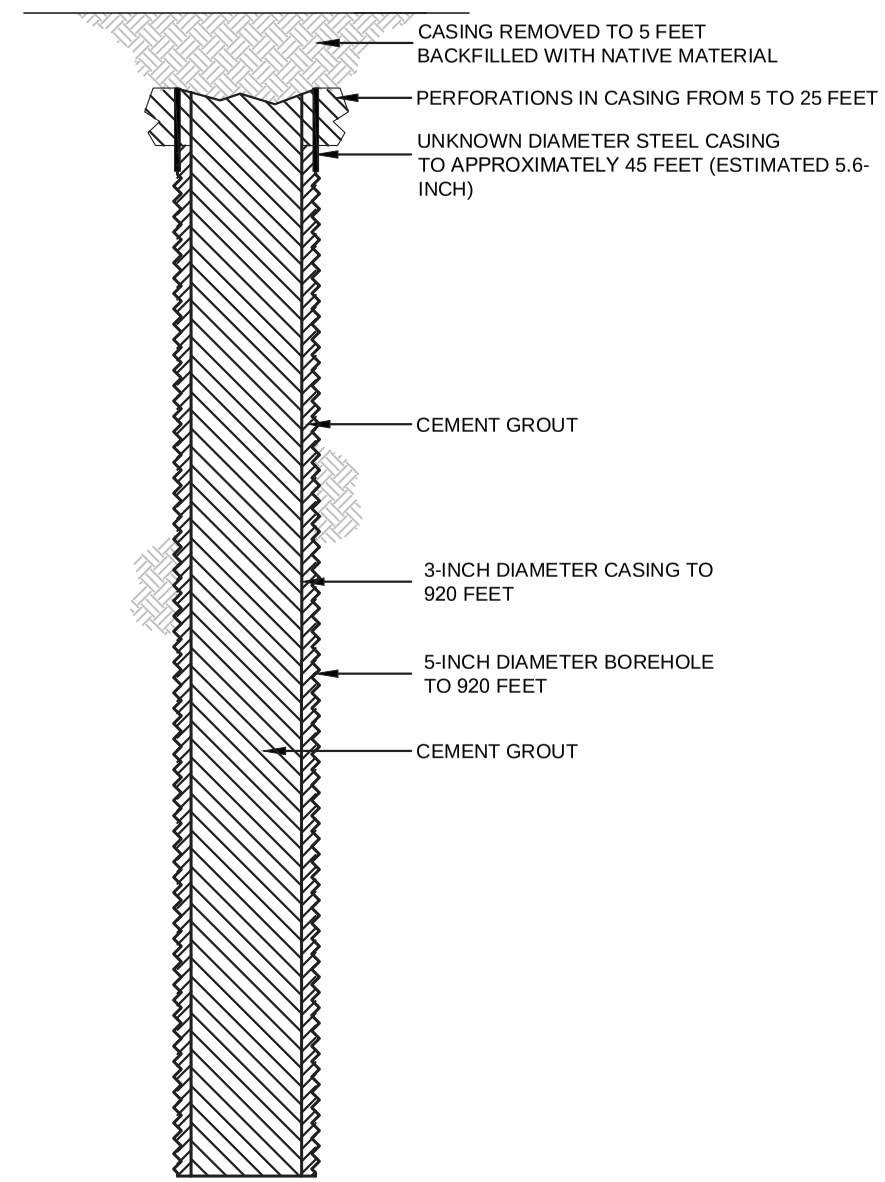

HALEY ALDRICH

FLORENCE COPPER, INC.
FLORENCE, ARIZONA

COREHOLE 449S DIAGRAM

FLORENCE COPPER INC.

NOT TO SCALE
SEPTEMBER 2019

FIGURE 1

MOBINI, GITA Printed: 4/21/2017 12:13 PM Layout: ABANDON (2)
G:\PROJECTS\CURIS RESOURCES\38706-CURIS FEASIBILITY\DRAWINGS\EPA\WELL\ABANDON\448S_ABANDON.DWG

OMB No. 2040-0042 Approval Expires 4/30/2022

United States Environmental Protection Agency

WELL REWORK RECORD, PLUGGING AND ABANDONMENT PLAN, OR PLUGGING AND ABANDONMENT AFFIDAVIT

Name and Address, Phone Number and/or Email of Permittee

Florence Copper Project
1575 W Hunt Hwy,
Florence, AZ 85132

Permit or EPA ID Number	API Number	Full Well Name
R9UIC-AZ3-FY11-1		450S

State	County
Arizona	Pinal

Locate well in two directions from nearest lines of quarter section and drilling unit

Latitude 33.05154823

Longitude -111.4366588

Surface Location

NW **1/4 of** SW **1/4 of Section** 28 **Township** 4S **Range** 9E

_____ **ft. from (N/S)** _____ **Line of quarter section**

_____ **ft. from (E/W)** _____ **Line of quarter section.**

Well Class	Timing of Action (pick one)	Type of Action (pick one)
☐ Class I ☐ Class II ☑ Class III ☐ Class V	☑ Notice Prior to Work Date Expected to Commence March 2021 ☐ Report After Work Date Work Ended	☐ Well Rework ☑ Plugging and Abandonment ☐ Conversion to a Non-Injection Well

Provide a narrative description of the work planned to be performed, or that was performed. Use additional pages as necessary. See instructions.

A workover rig capable of performing the required abandonment operations at the required depths will be moved in and set up over the core hole. The core hole will be inspected to determine the depth to which the hole remains open and if any obstructions are present in the core hole; the presence and condition of any existing collar will also be documented. If necessary, the core hole will be cleaned out to a depth of at least 100 feet below the bedrock-LBFU contact to enable placement of cement seals.

If collar is present, an attempt will be made to remove it. If removal of the collar is not feasible, it will be left in the hole and perforated as needed to allow an annular seal to be placed to a depth of at least 25 feet bgs. In areas of agricultural use, the surface casing will be cut at least 5 feet bgs and removed.

If the collar cannot be removed, it will be perforated from at least 20 feet below the bedrock-LBFU contact to at least 20 feet above the contact; from at least 20 feet below the base of the MFGU to at least 20 feet above the top of the MFGU; and from at least 25 feet bgs to 5 feet bgs.

A tremie pipe will be used to place Type V cement in the open core hole from the bottom of the core hole to the top of the core hole. Cement retainers, as described above, will be used to force cement grout into the annulus and behind perforated intervals, as necessary.

If the hole has been obstructed, as much cement as possible will be placed from 100 feet below the LBFU-bedrock contact to the top of the core hole.

The volume of Type V cement will be recorded and will not be less than the estimated volume of material required to fill each interval. All cement grout will consist of Type V cement, or equivalent approved in accordance with the UIC Permit.

Certification

I certify under the penalty of law that I have personally examined and am familiar with the information submitted in this document and all attachments and that, based on my inquiry of those individuals immediately responsible for obtaining the information, I believe that the information is true, accurate, and complete. I am aware that there are significant penalties for submitting false information, including the possibliity of fine and imprisonment. (Ref. 40 CFR § 144.32)

Name and Official Title *(Please type or print)*	Signature	Date Signed
Dan Johnson, VP - General Manager		10/3/2019

INSTRUCTIONS FOR FORM 7520-19

This form replaces forms 7520-12 and 7520-14. Use this form only when work is planned or has occurred that affects the well's construction or operation as an injection well, including work on the casing, tubing or packer (or for shallow Class V wells, the subsurface fluid emplacement network). Use one form per injection well. While reports or other information developed by contractors or service companies may be attached, this form must be signed by a responsible entity as described at 40 CFR 144.32. Note: operators closing Class V wells should use Form 7520-17.

NAME, ADDRESS, PHONE AND/OR EMAIL OF PERMITTEE: Enter the name and street address, city/town, state, and ZIP code of the permittee. Also provide an email address (if available) and/or a phone number.

PERMIT OR EPA ID NUMBER: Enter the well identification number or permit number assigned to the well by the EPA or the permitting authority.

API NUMBER: Enter the number assigned by the local jurisdiction (usually a State Oil and Gas Agency) using the American Petroleum Institute standard numbering system.

FULL WELL NAME: Enter the full name of the well or project.

Enter the **STATE** and **COUNTY** where the well is located. For States that do not have counties, use the name of that State's equivalent jurisdiction at a more local level.

WELL LOCATION: Fill in the complete township, range, and section to the nearest quarter-quarter section. A township is north or south of the baseline, and a range is east or west of the principal meridian (e.g., T12N, R34W). Also include the distance, in feet, from the nearest north or south line and nearest east or west line of the quarter-section. Also, enter the **latitude** and **longitude** of the well in decimal degrees, to five or six places if possible; be sure to include a negative sign for the longitude of a well in the Western Hemisphere and a negative sign for the latitude of a well in the Southern Hemisphere.

Enter the **WELL CLASS,** i.e., the class of injection well as defined in 40 CFR 144.6.

TIMING OF THE ACTION: Check ***Notice prior to work*** if the activity has not yet occurred (i.e., is planned). Check ***Report after work*** if the activity described has already occurred. As appropriate, include the date the activity is expected to start or the date the activity was completed. (Note this may not be available, e.g., for a plugging plan submitted with a permit application.)

TYPE OF ACTION: Check the appropriate box to describe the kind of activity being reported. Check ***Well Rework*** for work that was/will be performed on the well after it has already been in operation as an injection well. Check ***Plugging and Abandonment*** to report on plans for or descriptions of final closure/plugging after use as an injection well. Check ***Conversion to a Non-Injection Well*** if the well is to be converted to something other than an injection well.

Provide a **NARRATIVE DESCRIPTION** of the work planned to be performed, or that was performed. The narrative should include a description of the main procedures planned or that occurred during the work activity. A service company report, daily report, or similar document may be attached if it includes all the requested information and is clear and legible.

For well reworks, include the following information: The reason for the well rework; depths of activity; type of activity; changes to injection well configuration, well casing, or cement behind casing; any plug added to the well and its depth; any newly drilled interval and its depth; method(s) to demonstrate that the well has mechanical integrity (as applicable); and any deviations from the approved rework plan (as applicable).

For a well plugging plan, include the following information: Reason for the well plugging; number of plugs placed, and their depths; materials used as plugs (e.g., cast iron bridge plug, cement, cement retainer); method to set plugs; and wait-on-cement times, if any. Also provide one or more cost estimates from an independent firm in the business of plugging and abandoning wells to plug the well as described in the plan.

For well plugging affidavit, include the following information: Reason for the well plugging; number of plugs placed, and their depths; materials used as plugs (e.g., cast iron bridge plug, cement, cement retainer); method to set plugs; wait-on-cement times, if any; and any deviations from the approved plugging plan (if applicable).

For conversion to a non-injection well, include the following information: Depths of activity; type of activity; changes to injection well configuration, well casing, or cement behind casing; any plug added to the well and its depth; any newly drilled interval and its depth; depths of new perforations; and method(s) to demonstrate that the well has mechanical integrity (as applicable).

For all of the above activities, include a well sketch depicting the work, results of well tests/logging performed, service company tickets, and any other available information demonstrating how the work was/is to be performed. Also, specify whether depths are below ground surface, relative to Kelly bushing, etc.

CERTIFICATION: This form must be signed and dated by either: a responsible corporate officer for a corporation, by a general partner for a partnership, by the proprietor of a sole proprietorship, or by a principal executive or ranking elected official for a public agency.

PAPERWORK REDUCTION ACT NOTICE: The public reporting and recordkeeping burden for this collection of information is estimated to average between 6.0 and 7.9 hours per response, depending on the injection well class. Burden means the total time, effort, or financial resource expended by persons to generate, maintain, retain, or disclose or provide information to or for a Federal Agency. This includes the time needed to review instructions; develop, acquire, install, and utilize technology and systems for the purposes of collecting, validating, and verifying information, processing and maintaining information, and disclosing and providing information; adjust the existing ways to comply with any previously applicable instructions and requirements; train personnel to be able to respond to the collection of information; search data sources; complete and review the collection of information; and, transmit or otherwise disclose the information. An agency may not conduct or sponsor, and a person is not required to respond to, a collection of information unless it displays a currently valid OMB control number. Send comments on the Agency's need for this information, the accuracy of the provided burden estimates, and any suggested methods for minimizing respondent burden, including the use of automated collection techniques to Director, Collection Strategies Division, U.S. Environmental Protection Agency (2822), 1200 Pennsylvania Ave., NW., Washington, D.C. 20460. Include the OMB control number in any correspondence. Do not send the completed forms to this address.

AS-BUILT COREHOLE 450S

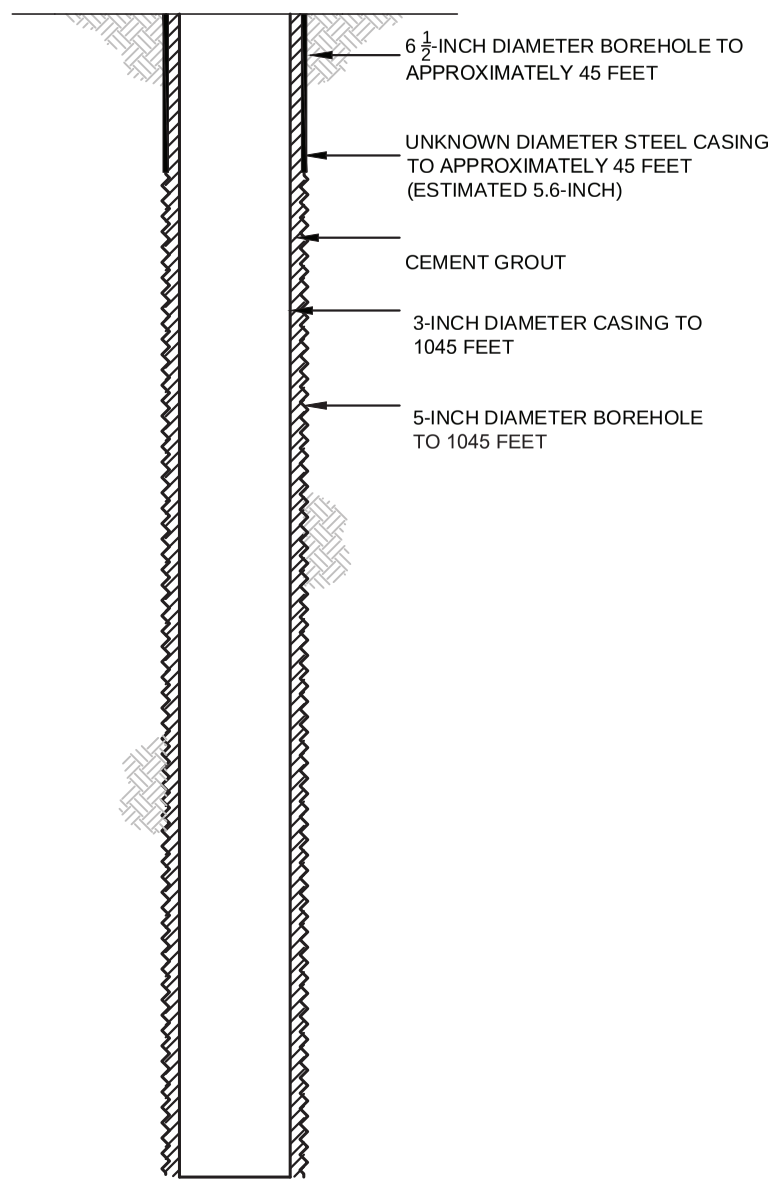

PROPOSED PLUGGING AND ABANDONMENT COREHOLE 450S

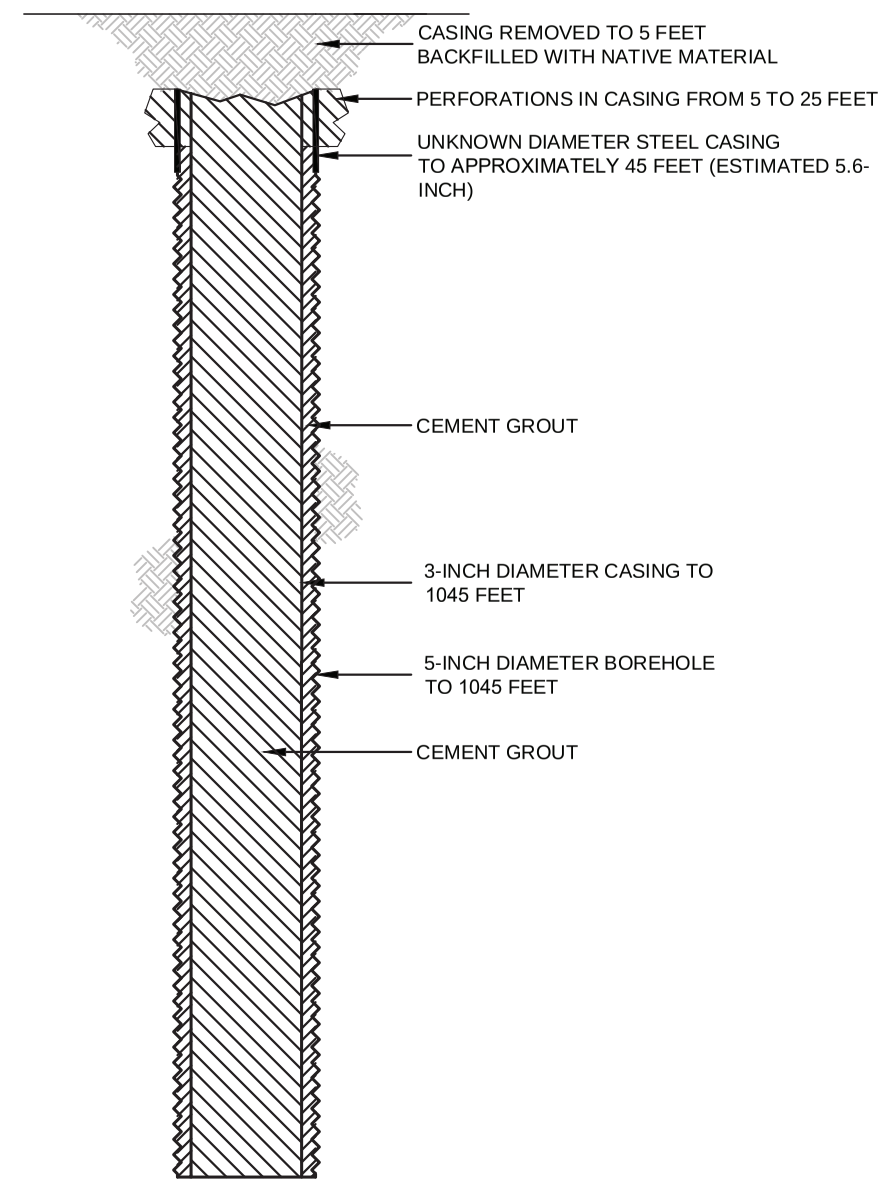

HALEY ALDRICH

FLORENCE COPPER, INC.
FLORENCE, ARIZONA

COREHOLE 450S DIAGRAM

FLORENCE COPPER INC.

NOT TO SCALE
SEPTEMBER 2019

FIGURE 1

MOBINI, GITA Printed: 4/21/2017 12:13 PM Layout: ABANDON (2)
G:\PROJECTS\CURIS RESOURCES\38706-CURIS FEASIBILITY\DRAWINGS\EPA\WELL\ABANDON\448S_ABANDON.DWG

OMB No. 2040-0042 Approval Expires 4/30/2022

United States Environmental Protection Agency

WELL REWORK RECORD, PLUGGING AND ABANDONMENT PLAN, OR PLUGGING AND ABANDONMENT AFFIDAVIT

Name and Address, Phone Number and/or Email of Permittee

Florence Copper Project
1575 W Hunt Hwy,
Florence, AZ 85132

Permit or EPA ID Number	API Number	Full Well Name
R9UIC-AZ3-FY11-1		451S

State	County
Arizona	Pinal

Locate well in two directions from nearest lines of quarter section and drilling unit

Surface Location

NW 1/4 of SW 1/4 of Section 28 Township 4S Range 9E

Latitude 33.05155137

Longitude -111.4374747

ft. from (N/S) Line of quarter section

ft. from (E/W) Line of quarter section.

Well Class	Timing of Action (pick one)	Type of Action (pick one)
☐ Class I ☐ Class II ☑ Class III ☐ Class V	☑ Notice Prior to Work Date Expected to Commence March 2021 ☐ Report After Work Date Work Ended	☐ Well Rework ☑ Plugging and Abandonment ☐ Conversion to a Non-Injection Well

Provide a narrative description of the work planned to be performed, or that was performed. Use additional pages as necessary. See instructions.

A workover rig capable of performing the required abandonment operations at the required depths will be moved in and set up over the core hole. The core hole will be inspected to determine the depth to which the hole remains open and if any obstructions are present in the core hole; the presence and condition of any existing collar will also be documented. If necessary, the core hole will be cleaned out to a depth of at least 100 feet below the bedrock-LBFU contact to enable placement of cement seals.

If collar is present, an attempt will be made to remove it. If removal of the collar is not feasible, it will be left in the hole and perforated as needed to allow an annular seal to be placed to a depth of at least 25 feet bgs. In areas of agricultural use, the surface casing will be cut at least 5 feet bgs and removed.

If the collar cannot be removed, it will be perforated from at least 20 feet below the bedrock-LBFU contact to at least 20 feet above the contact; from at least 20 feet below the base of the MFGU to at least 20 feet above the top of the MFGU; and from at least 25 feet bgs to 5 feet bgs.

A tremie pipe will be used to place Type V cement in the open core hole from the bottom of the core hole to the top of the core hole. Cement retainers, as described above, will be used to force cement grout into the annulus and behind perforated intervals, as necessary.

If the hole has been obstructed, as much cement as possible will be placed from 100 feet below the LBFU-bedrock contact to the top of the core hole.

The volume of Type V cement will be recorded and will not be less than the estimated volume of material required to fill each interval. All cement grout will consist of Type V cement, or equivalent approved in accordance with the UIC Permit.

Certification

I certify under the penalty of law that I have personally examined and am familiar with the information submitted in this document and all attachments and that, based on my inquiry of those individuals immediately responsible for obtaining the information, I believe that the information is true, accurate, and complete. I am aware that there are significant penalties for submitting false information, including the possibliity of fine and imprisonment. (Ref. 40 CFR § 144.32)

Name and Official Title *(Please type or print)*	Signature	Date Signed
Dan Johnson, VP - General Manager		10/3/2019

INSTRUCTIONS FOR FORM 7520-19

This form replaces forms 7520-12 and 7520-14. Use this form only when work is planned or has occurred that affects the well's construction or operation as an injection well, including work on the casing, tubing or packer (or for shallow Class V wells, the subsurface fluid emplacement network). Use one form per injection well. While reports or other information developed by contractors or service companies may be attached, this form must be signed by a responsible entity as described at 40 CFR 144.32. Note: operators closing Class V wells should use Form 7520-17.

NAME, ADDRESS, PHONE AND/OR EMAIL OF PERMITTEE: Enter the name and street address, city/town, state, and ZIP code of the permittee. Also provide an email address (if available) and/or a phone number.

PERMIT OR EPA ID NUMBER: Enter the well identification number or permit number assigned to the well by the EPA or the permitting authority.

API NUMBER: Enter the number assigned by the local jurisdiction (usually a State Oil and Gas Agency) using the American Petroleum Institute standard numbering system.

FULL WELL NAME: Enter the full name of the well or project.

Enter the **STATE** and **COUNTY** where the well is located. For States that do not have counties, use the name of that State's equivalent jurisdiction at a more local level.

WELL LOCATION: Fill in the complete township, range, and section to the nearest quarter-quarter section. A township is north or south of the baseline, and a range is east or west of the principal meridian (e.g., T12N, R34W). Also include the distance, in feet, from the nearest north or south line and nearest east or west line of the quarter-section. Also, enter the **latitude** and **longitude** of the well in decimal degrees, to five or six places if possible; be sure to include a negative sign for the longitude of a well in the Western Hemisphere and a negative sign for the latitude of a well in the Southern Hemisphere.

Enter the **WELL CLASS,** i.e., the class of injection well as defined in 40 CFR 144.6.

TIMING OF THE ACTION: Check ***Notice prior to work*** if the activity has not yet occurred (i.e., is planned). Check ***Report after work*** if the activity described has already occurred. As appropriate, include the date the activity is expected to start or the date the activity was completed. (Note this may not be available, e.g., for a plugging plan submitted with a permit application.)

TYPE OF ACTION: Check the appropriate box to describe the kind of activity being reported. Check ***Well Rework*** for work that was/will be performed on the well after it has already been in operation as an injection well. Check ***Plugging and Abandonment*** to report on plans for or descriptions of final closure/plugging after use as an injection well. Check ***Conversion to a Non-Injection Well*** if the well is to be converted to something other than an injection well.

Provide a **NARRATIVE DESCRIPTION** of the work planned to be performed, or that was performed. The narrative should include a description of the main procedures planned or that occurred during the work activity. A service company report, daily report, or similar document may be attached if it includes all the requested information and is clear and legible.

For well reworks, include the following information: The reason for the well rework; depths of activity; type of activity; changes to injection well configuration, well casing, or cement behind casing; any plug added to the well and its depth; any newly drilled interval and its depth; method(s) to demonstrate that the well has mechanical integrity (as applicable); and any deviations from the approved rework plan (as applicable).

For a well plugging plan, include the following information: Reason for the well plugging; number of plugs placed, and their depths; materials used as plugs (e.g., cast iron bridge plug, cement, cement retainer); method to set plugs; and wait-on-cement times, if any. Also provide one or more cost estimates from an independent firm in the business of plugging and abandoning wells to plug the well as described in the plan.

For well plugging affidavit, include the following information: Reason for the well plugging; number of plugs placed, and their depths; materials used as plugs (e.g., cast iron bridge plug, cement, cement retainer); method to set plugs; wait-on-cement times, if any; and any deviations from the approved plugging plan (if applicable).

For conversion to a non-injection well, include the following information: Depths of activity; type of activity; changes to injection well configuration, well casing, or cement behind casing; any plug added to the well and its depth; any newly drilled interval and its depth; depths of new perforations; and method(s) to demonstrate that the well has mechanical integrity (as applicable).

For all of the above activities, include a well sketch depicting the work, results of well tests/logging performed, service company tickets, and any other available information demonstrating how the work was/is to be performed. Also, specify whether depths are below ground surface, relative to Kelly bushing, etc.

CERTIFICATION: This form must be signed and dated by either: a responsible corporate officer for a corporation, by a general partner for a partnership, by the proprietor of a sole proprietorship, or by a principal executive or ranking elected official for a public agency.

PAPERWORK REDUCTION ACT NOTICE: The public reporting and recordkeeping burden for this collection of information is estimated to average between 6.0 and 7.9 hours per response, depending on the injection well class. Burden means the total time, effort, or financial resource expended by persons to generate, maintain, retain, or disclose or provide information to or for a Federal Agency. This includes the time needed to review instructions; develop, acquire, install, and utilize technology and systems for the purposes of collecting, validating, and verifying information, processing and maintaining information, and disclosing and providing information; adjust the existing ways to comply with any previously applicable instructions and requirements; train personnel to be able to respond to the collection of information; search data sources; complete and review the collection of information; and, transmit or otherwise disclose the information. An agency may not conduct or sponsor, and a person is not required to respond to, a collection of information unless it displays a currently valid OMB control number. Send comments on the Agency's need for this information, the accuracy of the provided burden estimates, and any suggested methods for minimizing respondent burden, including the use of automated collection techniques to Director, Collection Strategies Division, U.S. Environmental Protection Agency (2822), 1200 Pennsylvania Ave., NW., Washington, D.C. 20460. Include the OMB control number in any correspondence. Do not send the completed forms to this address.

AS-BUILT COREHOLE 451S

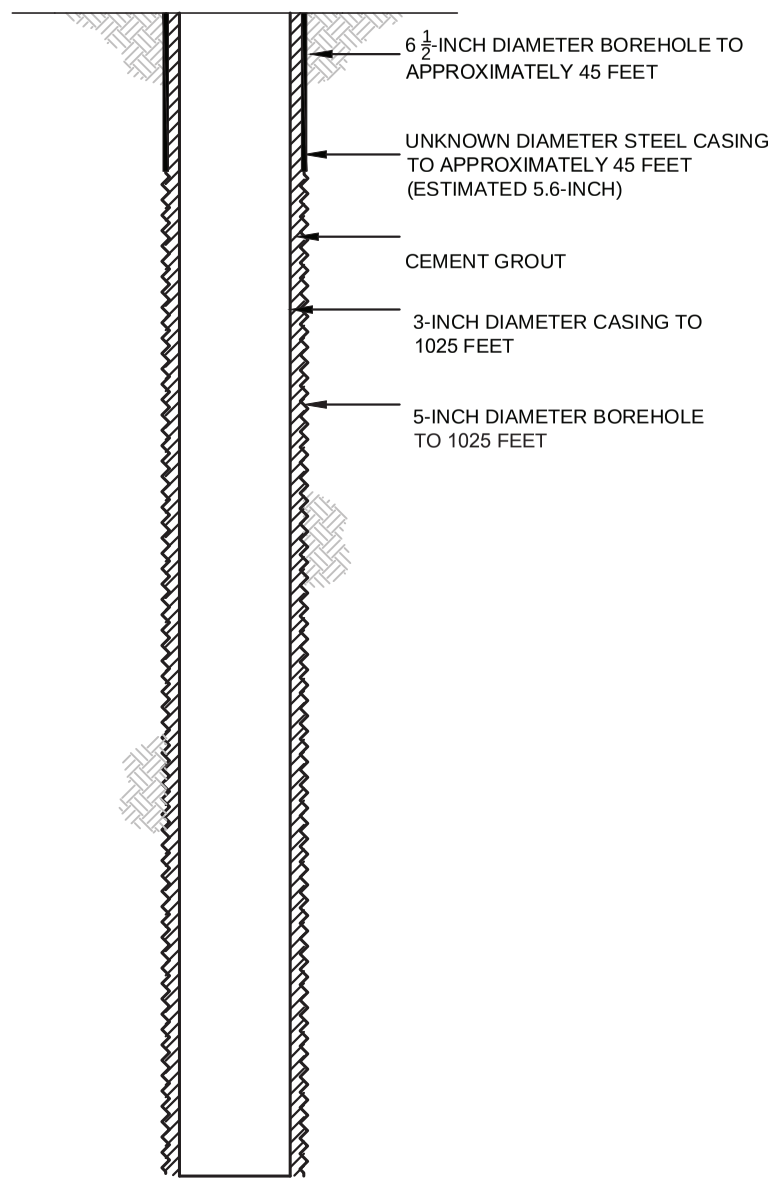

PROPOSED PLUGGING AND ABANDONMENT COREHOLE 451S

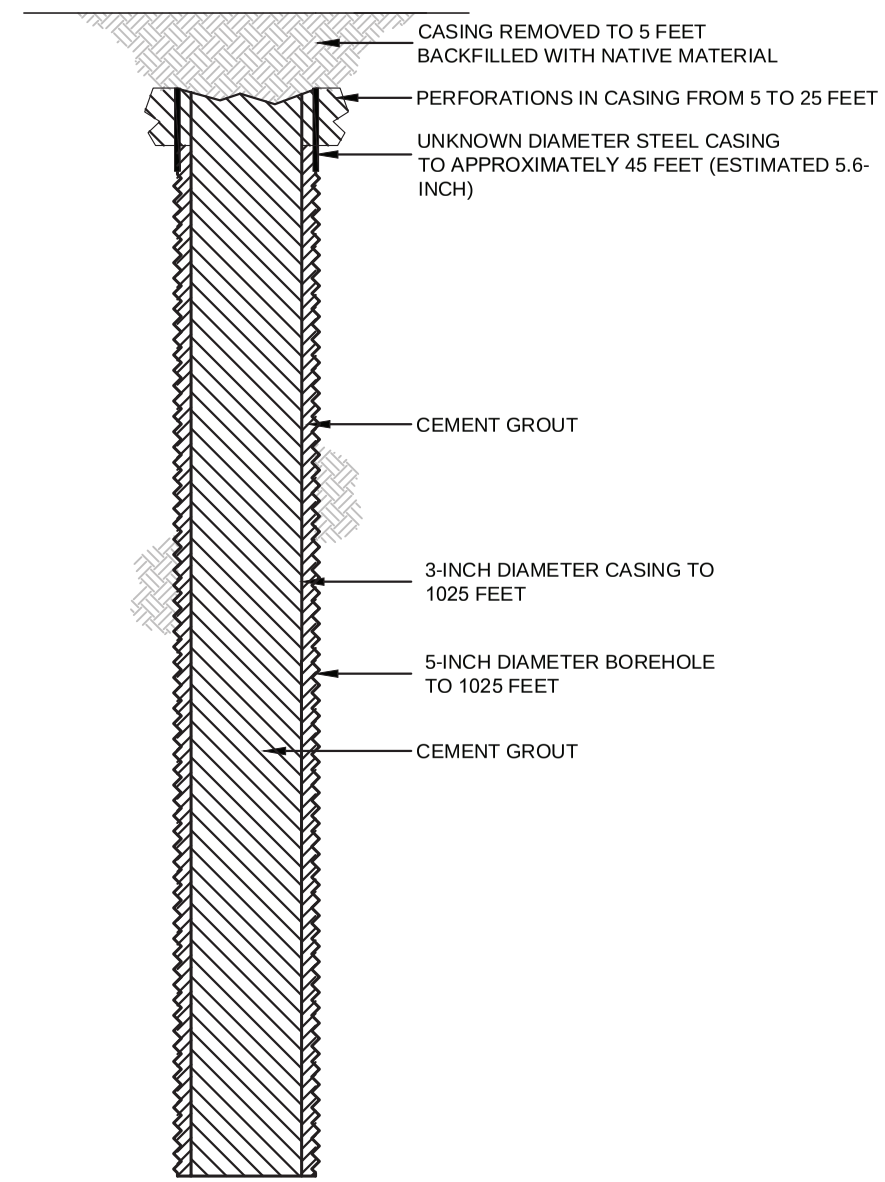

HALEY ALDRICH

FLORENCE COPPER, INC.
FLORENCE, ARIZONA

COREHOLE 451S DIAGRAM

FLORENCE COPPER INC.

NOT TO SCALE
SEPTEMBER 2019

FIGURE 1

MOBINI, GITA Printed: 4/21/2017 12:13 PM Layout: ABANDON (2)
G:\PROJECTS\CURIS RESOURCES\38706-CURIS FEASIBILITY\DRAWINGS\EPA\WELL\ABANDON\448S_ABANDON.DWG

OMB No. 2040-0042 Approval Expires 4/30/2022

United States Environmental Protection Agency

WELL REWORK RECORD, PLUGGING AND ABANDONMENT PLAN, OR PLUGGING AND ABANDONMENT AFFIDAVIT

Name and Address, Phone Number and/or Email of Permittee

Florence Copper Project
1575 W Hunt Hwy,
Florence, AZ 85132

Permit or EPA ID Number	API Number	Full Well Name
R9UIC-AZ3-FY11-1		452S

State	County
Arizona	Pinal

Locate well in two directions from nearest lines of quarter section and drilling unit

Latitude 33.05095611

Longitude -111.43707

Surface Location

NW **1/4 of** SW **1/4 of Section** 28 **Township** 4S **Range** 9E

_____ **ft. from (N/S)** _____ **Line of quarter section**

_____ **ft. from (E/W)** _____ **Line of quarter section.**

Well Class	Timing of Action (pick one)	Type of Action (pick one)
☐ Class I ☐ Class II ☑ Class III ☐ Class V	☑ Notice Prior to Work Date Expected to Commence March 2021 ☐ Report After Work Date Work Ended	☐ Well Rework ☑ Plugging and Abandonment ☐ Conversion to a Non-Injection Well

Provide a narrative description of the work planned to be performed, or that was performed. Use additional pages as necessary. See instructions.

A workover rig capable of performing the required abandonment operations at the required depths will be moved in and set up over the core hole. The core hole will be inspected to determine the depth to which the hole remains open and if any obstructions are present in the core hole; the presence and condition of any existing collar will also be documented. If necessary, the core hole will be cleaned out to a depth of at least 100 feet below the bedrock-LBFU contact to enable placement of cement seals.

If collar is present, an attempt will be made to remove it. If removal of the collar is not feasible, it will be left in the hole and perforated as needed to allow an annular seal to be placed to a depth of at least 25 feet bgs. In areas of agricultural use, the surface casing will be cut at least 5 feet bgs and removed.

If the collar cannot be removed, it will be perforated from at least 20 feet below the bedrock-LBFU contact to at least 20 feet above the contact; from at least 20 feet below the base of the MFGU to at least 20 feet above the top of the MFGU; and from at least 25 feet bgs to 5 feet bgs.

A tremie pipe will be used to place Type V cement in the open core hole from the bottom of the core hole to the top of the core hole. Cement retainers, as described above, will be used to force cement grout into the annulus and behind perforated intervals, as necessary.

If the hole has been obstructed, as much cement as possible will be placed from 100 feet below the LBFU-bedrock contact to the top of the core hole.

The volume of Type V cement will be recorded and will not be less than the estimated volume of material required to fill each interval. All cement grout will consist of Type V cement, or equivalent approved in accordance with the UIC Permit.

Certification

I certify under the penalty of law that I have personally examined and am familiar with the information submitted in this document and all attachments and that, based on my inquiry of those individuals immediately responsible for obtaining the information, I believe that the information is true, accurate, and complete. I am aware that there are significant penalties for submitting false information, including the possibliity of fine and imprisonment. (Ref. 40 CFR § 144.32)

Name and Official Title *(Please type or print)*	Signature	Date Signed
Dan Johnson, VP - General Manager		10/3/2019

INSTRUCTIONS FOR FORM 7520-19

This form replaces forms 7520-12 and 7520-14. Use this form only when work is planned or has occurred that affects the well's construction or operation as an injection well, including work on the casing, tubing or packer (or for shallow Class V wells, the subsurface fluid emplacement network). Use one form per injection well. While reports or other information developed by contractors or service companies may be attached, this form must be signed by a responsible entity as described at 40 CFR 144.32. Note: operators closing Class V wells should use Form 7520-17.

NAME, ADDRESS, PHONE AND/OR EMAIL OF PERMITTEE: Enter the name and street address, city/town, state, and ZIP code of the permittee. Also provide an email address (if available) and/or a phone number.

PERMIT OR EPA ID NUMBER: Enter the well identification number or permit number assigned to the well by the EPA or the permitting authority.

API NUMBER: Enter the number assigned by the local jurisdiction (usually a State Oil and Gas Agency) using the American Petroleum Institute standard numbering system.

FULL WELL NAME: Enter the full name of the well or project.

Enter the **STATE** and **COUNTY** where the well is located. For States that do not have counties, use the name of that State's equivalent jurisdiction at a more local level.

WELL LOCATION: Fill in the complete township, range, and section to the nearest quarter-quarter section. A township is north or south of the baseline, and a range is east or west of the principal meridian (e.g., T12N, R34W). Also include the distance, in feet, from the nearest north or south line and nearest east or west line of the quarter-section. Also, enter the **latitude** and **longitude** of the well in decimal degrees, to five or six places if possible; be sure to include a negative sign for the longitude of a well in the Western Hemisphere and a negative sign for the latitude of a well in the Southern Hemisphere.

Enter the **WELL CLASS,** i.e., the class of injection well as defined in 40 CFR 144.6.

TIMING OF THE ACTION: Check ***Notice prior to work*** if the activity has not yet occurred (i.e., is planned). Check ***Report after work*** if the activity described has already occurred. As appropriate, include the date the activity is expected to start or the date the activity was completed. (Note this may not be available, e.g., for a plugging plan submitted with a permit application.)

TYPE OF ACTION: Check the appropriate box to describe the kind of activity being reported. Check ***Well Rework*** for work that was/will be performed on the well after it has already been in operation as an injection well. Check ***Plugging and Abandonment*** to report on plans for or descriptions of final closure/plugging after use as an injection well. Check ***Conversion to a Non-Injection Well*** if the well is to be converted to something other than an injection well.

Provide a **NARRATIVE DESCRIPTION** of the work planned to be performed, or that was performed. The narrative should include a description of the main procedures planned or that occurred during the work activity. A service company report, daily report, or similar document may be attached if it includes all the requested information and is clear and legible.

For well reworks, include the following information: The reason for the well rework; depths of activity; type of activity; changes to injection well configuration, well casing, or cement behind casing; any plug added to the well and its depth; any newly drilled interval and its depth; method(s) to demonstrate that the well has mechanical integrity (as applicable); and any deviations from the approved rework plan (as applicable).

For a well plugging plan, include the following information: Reason for the well plugging; number of plugs placed, and their depths; materials used as plugs (e.g., cast iron bridge plug, cement, cement retainer); method to set plugs; and wait-on-cement times, if any. Also provide one or more cost estimates from an independent firm in the business of plugging and abandoning wells to plug the well as described in the plan.

For well plugging affidavit, include the following information: Reason for the well plugging; number of plugs placed, and their depths; materials used as plugs (e.g., cast iron bridge plug, cement, cement retainer); method to set plugs; wait-on-cement times, if any; and any deviations from the approved plugging plan (if applicable).

For conversion to a non-injection well, include the following information: Depths of activity; type of activity; changes to injection well configuration, well casing, or cement behind casing; any plug added to the well and its depth; any newly drilled interval and its depth; depths of new perforations; and method(s) to demonstrate that the well has mechanical integrity (as applicable).

For all of the above activities, include a well sketch depicting the work, results of well tests/logging performed, service company tickets, and any other available information demonstrating how the work was/is to be performed. Also, specify whether depths are below ground surface, relative to Kelly bushing, etc.

CERTIFICATION: This form must be signed and dated by either: a responsible corporate officer for a corporation, by a general partner for a partnership, by the proprietor of a sole proprietorship, or by a principal executive or ranking elected official for a public agency.

PAPERWORK REDUCTION ACT NOTICE: The public reporting and recordkeeping burden for this collection of information is estimated to average between 6.0 and 7.9 hours per response, depending on the injection well class. Burden means the total time, effort, or financial resource expended by persons to generate, maintain, retain, or disclose or provide information to or for a Federal Agency. This includes the time needed to review instructions; develop, acquire, install, and utilize technology and systems for the purposes of collecting, validating, and verifying information, processing and maintaining information, and disclosing and providing information; adjust the existing ways to comply with any previously applicable instructions and requirements; train personnel to be able to respond to the collection of information; search data sources; complete and review the collection of information; and, transmit or otherwise disclose the information. An agency may not conduct or sponsor, and a person is not required to respond to, a collection of information unless it displays a currently valid OMB control number. Send comments on the Agency's need for this information, the accuracy of the provided burden estimates, and any suggested methods for minimizing respondent burden, including the use of automated collection techniques to Director, Collection Strategies Division, U.S. Environmental Protection Agency (2822), 1200 Pennsylvania Ave., NW., Washington, D.C. 20460. Include the OMB control number in any correspondence. Do not send the completed forms to this address.

AS-BUILT COREHOLE 452S

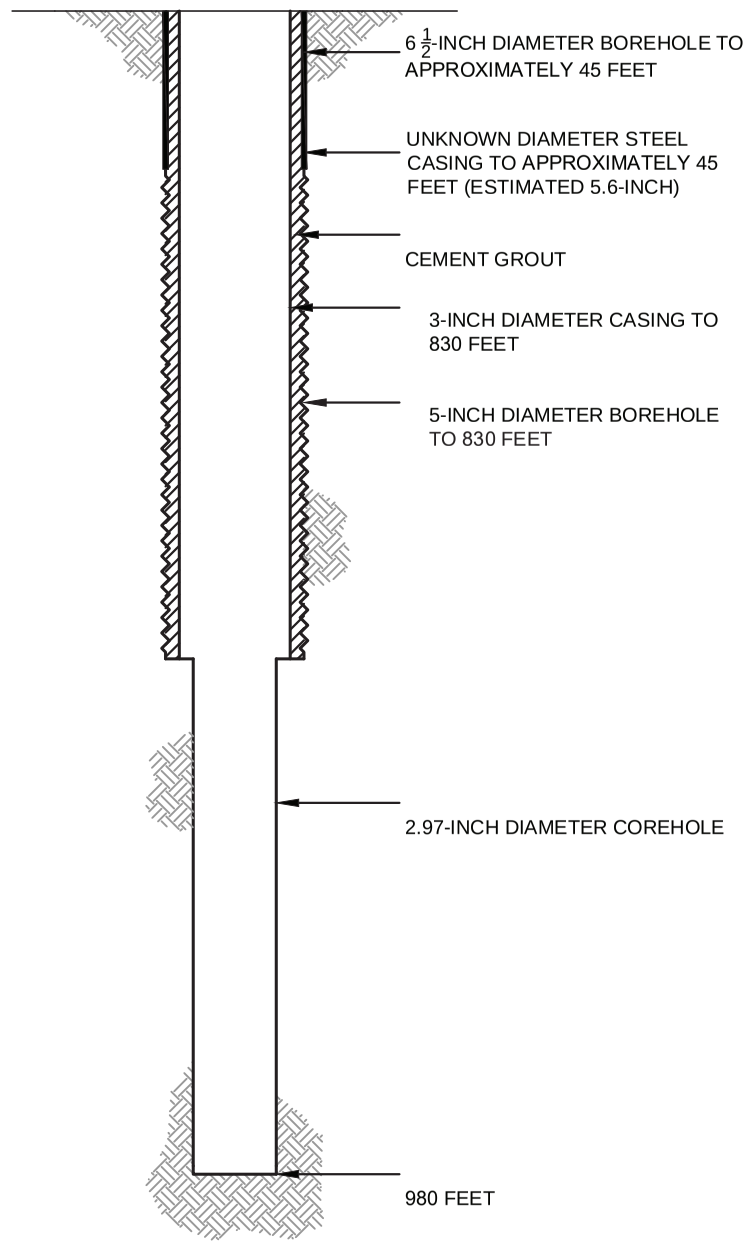

PROPOSED PLUGGING AND ABANDONMENT COREHOLE 452S

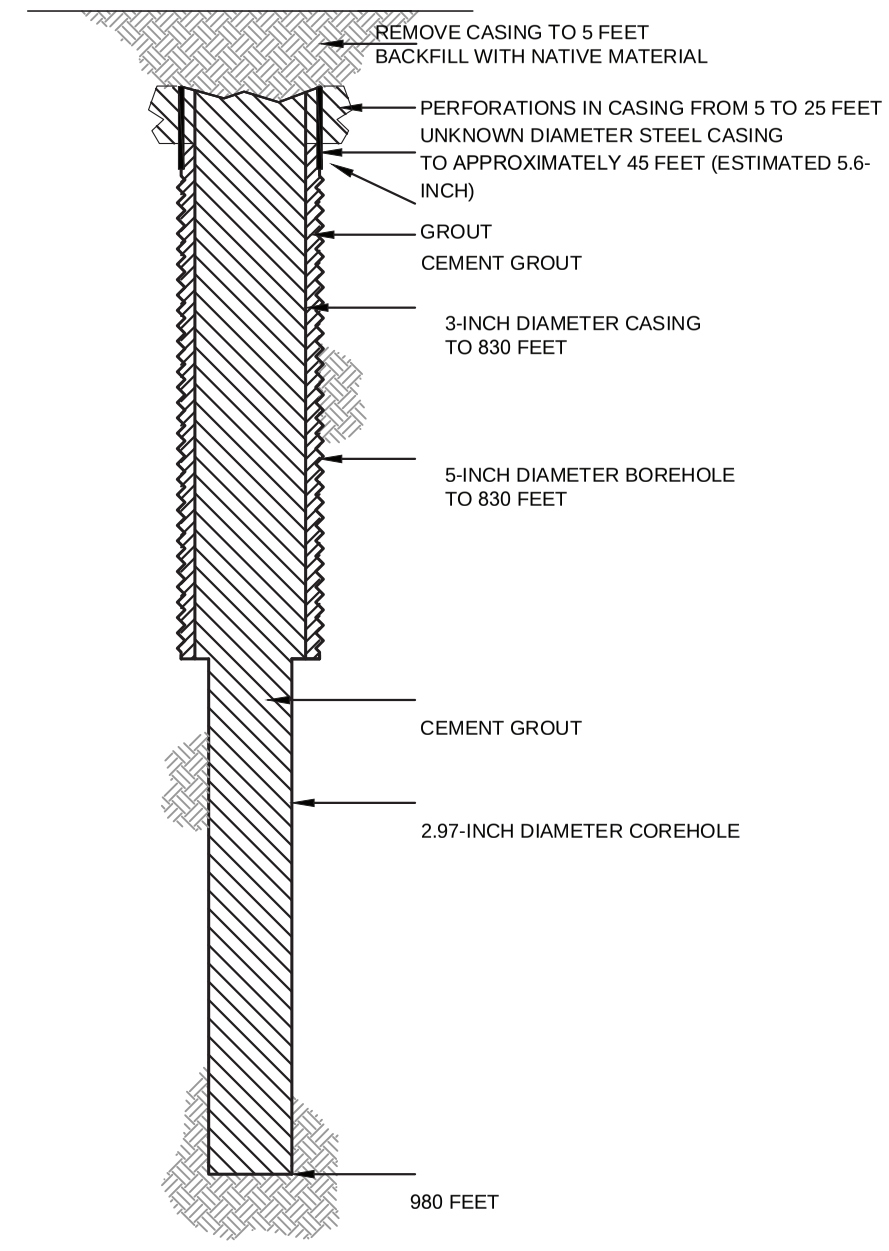

HALEY ALDRICH

FLORENCE COPPER, INC.
FLORENCE, ARIZONA

COREHOLE 452S DIAGRAM

FLORENCE COPPER INC.

NOT TO SCALE
SEPTEMBER 2019

FIGURE 1

MOBINI, GITA Printed: 4/21/2017 12:00 PM Layout: ABANDON (2)
\PROJECTS\CURIS RESOURCES38706-CURIS FEASIBILITY\DRAWINGS\EPA\WELL ABANDON\415S_ABANDON.DWG

OMB No. 2040-0042 Approval Expires 4/30/2022

United States Environmental Protection Agency

WELL REWORK RECORD, PLUGGING AND ABANDONMENT PLAN, OR PLUGGING AND ABANDONMENT AFFIDAVIT

Name and Address, Phone Number and/or Email of Permittee

Florence Copper Project
1575 W Hunt Hwy,
Florence, AZ 85132

Permit or EPA ID Number	API Number	Full Well Name
R9UIC-AZ3-FY11-1		457S

State	County
Arizona	Pinal

Locate well in two directions from nearest lines of quarter section and drilling unit

Surface Location

NW **1/4 of** SW **1/4 of Section** 28 **Township** 4S **Range** 9E

Latitude 33.05035948

Longitude -111.4366653

_____ **ft. from (N/S)** _____ **Line of quarter section**

_____ **ft. from (E/W)** _____ **Line of quarter section.**

Well Class	Timing of Action (pick one)	Type of Action (pick one)
☐ Class I ☐ Class II ☑ Class III ☐ Class V	☑ Notice Prior to Work Date Expected to Commence March 2021 ☐ Report After Work Date Work Ended	☐ Well Rework ☑ Plugging and Abandonment ☐ Conversion to a Non-Injection Well

Provide a narrative description of the work planned to be performed, or that was performed. Use additional pages as necessary. See instructions.

A workover rig capable of performing the required abandonment operations at the required depths will be moved in and set up over the core hole. The core hole will be inspected to determine the depth to which the hole remains open and if any obstructions are present in the core hole; the presence and condition of any existing collar will also be documented. If necessary, the core hole will be cleaned out to a depth of at least 100 feet below the bedrock-LBFU contact to enable placement of cement seals.

If collar is present, an attempt will be made to remove it. If removal of the collar is not feasible, it will be left in the hole and perforated as needed to allow an annular seal to be placed to a depth of at least 25 feet bgs. In areas of agricultural use, the surface casing will be cut at least 5 feet bgs and removed.

If the collar cannot be removed, it will be perforated from at least 20 feet below the bedrock-LBFU contact to at least 20 feet above the contact; from at least 20 feet below the base of the MFGU to at least 20 feet above the top of the MFGU; and from at least 25 feet bgs to 5 feet bgs.

A tremie pipe will be used to place Type V cement in the open core hole from the bottom of the core hole to the top of the core hole. Cement retainers, as described above, will be used to force cement grout into the annulus and behind perforated intervals, as necessary.

If the hole has been obstructed, as much cement as possible will be placed from 100 feet below the LBFU-bedrock contact to the top of the core hole.

The volume of Type V cement will be recorded and will not be less than the estimated volume of material required to fill each interval. All cement grout will consist of Type V cement, or equivalent approved in accordance with the UIC Permit.

Certification

I certify under the penalty of law that I have personally examined and am familiar with the information submitted in this document and all attachments and that, based on my inquiry of those individuals immediately responsible for obtaining the information, I believe that the information is true, accurate, and complete. I am aware that there are significant penalties for submitting false information, including the possibliity of fine and imprisonment. (Ref. 40 CFR § 144.32)

Name and Official Title *(Please type or print)*	Signature	Date Signed
Dan Johnson, VP - General Manager		10/3/2019

INSTRUCTIONS FOR FORM 7520-19

This form replaces forms 7520-12 and 7520-14. Use this form only when work is planned or has occurred that affects the well's construction or operation as an injection well, including work on the casing, tubing or packer (or for shallow Class V wells, the subsurface fluid emplacement network). Use one form per injection well. While reports or other information developed by contractors or service companies may be attached, this form must be signed by a responsible entity as described at 40 CFR 144.32. Note: operators closing Class V wells should use Form 7520-17.

NAME, ADDRESS, PHONE AND/OR EMAIL OF PERMITTEE: Enter the name and street address, city/town, state, and ZIP code of the permittee. Also provide an email address (if available) and/or a phone number.

PERMIT OR EPA ID NUMBER: Enter the well identification number or permit number assigned to the well by the EPA or the permitting authority.

API NUMBER: Enter the number assigned by the local jurisdiction (usually a State Oil and Gas Agency) using the American Petroleum Institute standard numbering system.

FULL WELL NAME: Enter the full name of the well or project.

Enter the **STATE** and **COUNTY** where the well is located. For States that do not have counties, use the name of that State's equivalent jurisdiction at a more local level.

WELL LOCATION: Fill in the complete township, range, and section to the nearest quarter-quarter section. A township is north or south of the baseline, and a range is east or west of the principal meridian (e.g., T12N, R34W). Also include the distance, in feet, from the nearest north or south line and nearest east or west line of the quarter-section. Also, enter the **latitude** and **longitude** of the well in decimal degrees, to five or six places if possible; be sure to include a negative sign for the longitude of a well in the Western Hemisphere and a negative sign for the latitude of a well in the Southern Hemisphere.

Enter the **WELL CLASS,** i.e., the class of injection well as defined in 40 CFR 144.6.

TIMING OF THE ACTION: Check ***Notice prior to work*** if the activity has not yet occurred (i.e., is planned). Check ***Report after work*** if the activity described has already occurred. As appropriate, include the date the activity is expected to start or the date the activity was completed. (Note this may not be available, e.g., for a plugging plan submitted with a permit application.)

TYPE OF ACTION: Check the appropriate box to describe the kind of activity being reported. Check ***Well Rework*** for work that was/will be performed on the well after it has already been in operation as an injection well. Check ***Plugging and Abandonment*** to report on plans for or descriptions of final closure/plugging after use as an injection well. Check ***Conversion to a Non-Injection Well*** if the well is to be converted to something other than an injection well.

Provide a **NARRATIVE DESCRIPTION** of the work planned to be performed, or that was performed. The narrative should include a description of the main procedures planned or that occurred during the work activity. A service company report, daily report, or similar document may be attached if it includes all the requested information and is clear and legible.

For well reworks, include the following information: The reason for the well rework; depths of activity; type of activity; changes to injection well configuration, well casing, or cement behind casing; any plug added to the well and its depth; any newly drilled interval and its depth; method(s) to demonstrate that the well has mechanical integrity (as applicable); and any deviations from the approved rework plan (as applicable).

For a well plugging plan, include the following information: Reason for the well plugging; number of plugs placed, and their depths; materials used as plugs (e.g., cast iron bridge plug, cement, cement retainer); method to set plugs; and wait-on-cement times, if any. Also provide one or more cost estimates from an independent firm in the business of plugging and abandoning wells to plug the well as described in the plan.

For well plugging affidavit, include the following information: Reason for the well plugging; number of plugs placed, and their depths; materials used as plugs (e.g., cast iron bridge plug, cement, cement retainer); method to set plugs; wait-on-cement times, if any; and any deviations from the approved plugging plan (if applicable).

For conversion to a non-injection well, include the following information: Depths of activity; type of activity; changes to injection well configuration, well casing, or cement behind casing; any plug added to the well and its depth; any newly drilled interval and its depth; depths of new perforations; and method(s) to demonstrate that the well has mechanical integrity (as applicable).

For all of the above activities, include a well sketch depicting the work, results of well tests/logging performed, service company tickets, and any other available information demonstrating how the work was/is to be performed. Also, specify whether depths are below ground surface, relative to Kelly bushing, etc.

CERTIFICATION: This form must be signed and dated by either: a responsible corporate officer for a corporation, by a general partner for a partnership, by the proprietor of a sole proprietorship, or by a principal executive or ranking elected official for a public agency.

PAPERWORK REDUCTION ACT NOTICE: The public reporting and recordkeeping burden for this collection of information is estimated to average between 6.0 and 7.9 hours per response, depending on the injection well class. Burden means the total time, effort, or financial resource expended by persons to generate, maintain, retain, or disclose or provide information to or for a Federal Agency. This includes the time needed to review instructions; develop, acquire, install, and utilize technology and systems for the purposes of collecting, validating, and verifying information, processing and maintaining information, and disclosing and providing information; adjust the existing ways to comply with any previously applicable instructions and requirements; train personnel to be able to respond to the collection of information; search data sources; complete and review the collection of information; and, transmit or otherwise disclose the information. An agency may not conduct or sponsor, and a person is not required to respond to, a collection of information unless it displays a currently valid OMB control number. Send comments on the Agency's need for this information, the accuracy of the provided burden estimates, and any suggested methods for minimizing respondent burden, including the use of automated collection techniques to Director, Collection Strategies Division, U.S. Environmental Protection Agency (2822), 1200 Pennsylvania Ave., NW., Washington, D.C. 20460. Include the OMB control number in any correspondence. Do not send the completed forms to this address.

AS-BUILT COREHOLE 457S

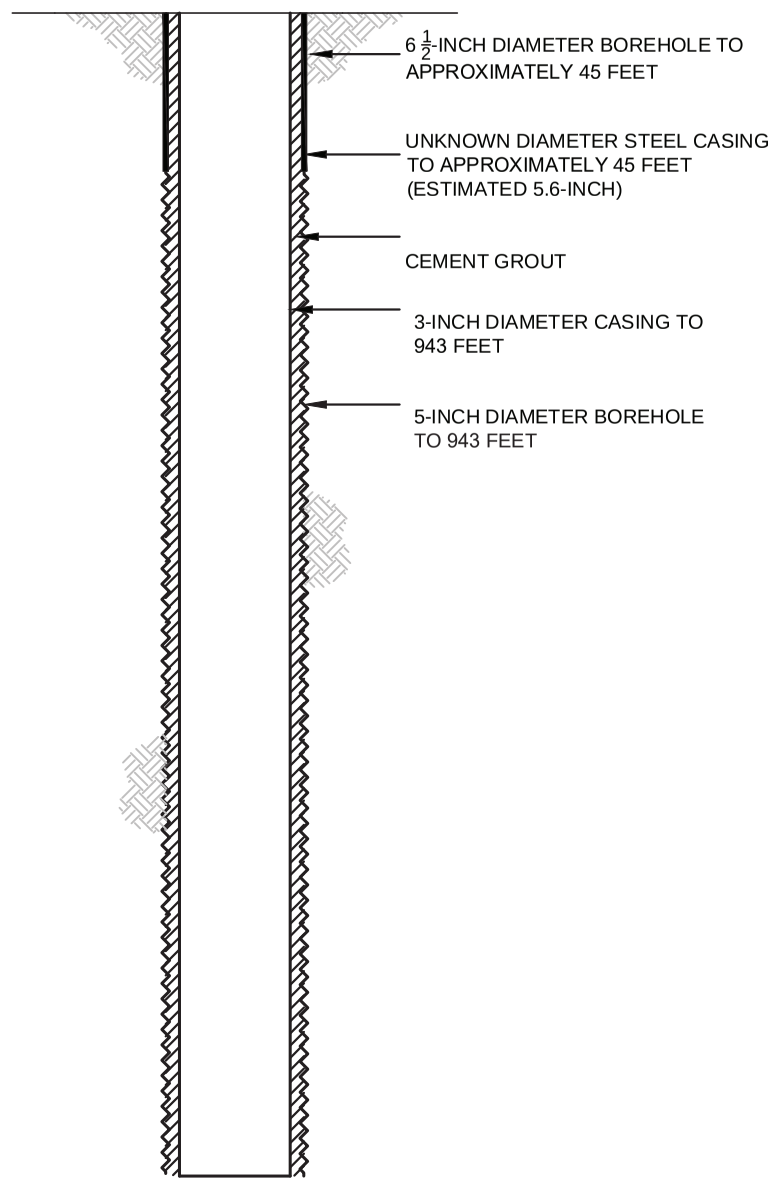

PROPOSED PLUGGING AND ABANDONMENT COREHOLE 457S

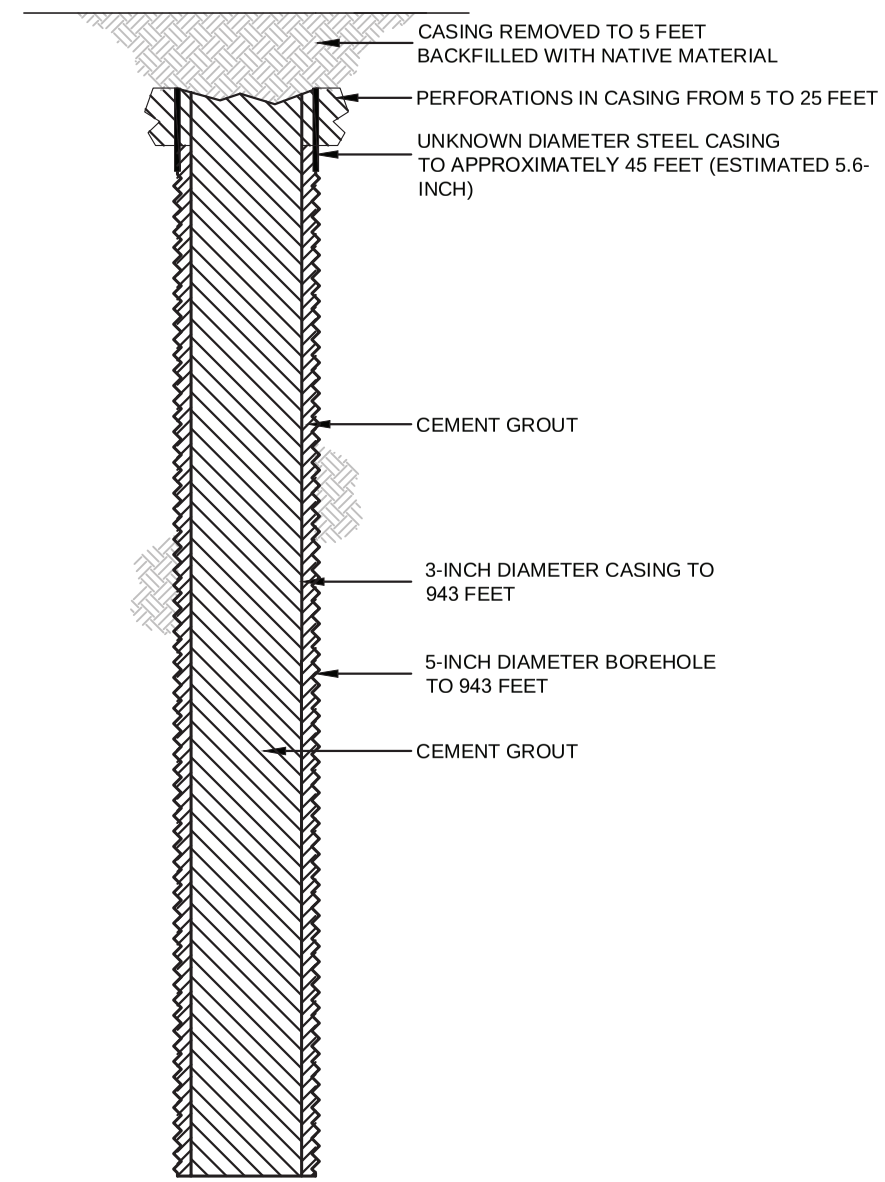

HALEY ALDRICH

FLORENCE COPPER, INC.
FLORENCE, ARIZONA

COREHOLE 457S DIAGRAM

FLORENCE COPPER INC.

NOT TO SCALE
SEPTEMBER 2019

FIGURE 1

MOBINI, GITA Printed: 4/21/2017 12:13 PM Layout: ABANDON (2)
G:\PROJECTS\CURIS RESOURCES\38706-CURIS FEASIBILITY\DRAWINGS\EPA\WELL\ABANDON\448S_ABANDON.DWG

OMB No. 2040-0042 Approval Expires 4/30/2022

United States Environmental Protection Agency

EPA

WELL REWORK RECORD, PLUGGING AND ABANDONMENT PLAN, OR PLUGGING AND ABANDONMENT AFFIDAVIT

Name and Address, Phone Number and/or Email of Permittee

Florence Copper Project
1575 W Hunt Hwy,
Florence, AZ 85132

Permit or EPA ID Number	API Number	Full Well Name
R9UIC-AZ3-FY11-1		458S

State	County
Arizona	Pinal

Locate well in two directions from nearest lines of quarter section and drilling unit

Surface Location

NW **1/4 of** SW **1/4 of Section** 28 **Township** 4S **Range** 9E

Latitude 33.04976285

Longitude -111.4362606

_____ **ft. from (N/S)** _____ **Line of quarter section**

_____ **ft. from (E/W)** _____ **Line of quarter section.**

Well Class	Timing of Action (pick one)	Type of Action (pick one)
☐ Class I ☐ Class II ☑ Class III ☐ Class V	☑ Notice Prior to Work Date Expected to Commence March 2021 ☐ Report After Work Date Work Ended	☐ Well Rework ☑ Plugging and Abandonment ☐ Conversion to a Non-Injection Well

Provide a narrative description of the work planned to be performed, or that was performed. Use additional pages as necessary. See instructions.

A workover rig capable of performing the required abandonment operations at the required depths will be moved in and set up over the core hole. The core hole will be inspected to determine the depth to which the hole remains open and if any obstructions are present in the core hole; the presence and condition of any existing collar will also be documented. If necessary, the core hole will be cleaned out to a depth of at least 100 feet below the bedrock-LBFU contact to enable placement of cement seals.

If collar is present, an attempt will be made to remove it. If removal of the collar is not feasible, it will be left in the hole and perforated as needed to allow an annular seal to be placed to a depth of at least 25 feet bgs. In areas of agricultural use, the surface casing will be cut at least 5 feet bgs and removed.

If the collar cannot be removed, it will be perforated from at least 20 feet below the bedrock-LBFU contact to at least 20 feet above the contact; from at least 20 feet below the base of the MFGU to at least 20 feet above the top of the MFGU; and from at least 25 feet bgs to 5 feet bgs.

A tremie pipe will be used to place Type V cement in the open core hole from the bottom of the core hole to the top of the core hole. Cement retainers, as described above, will be used to force cement grout into the annulus and behind perforated intervals, as necessary.

If the hole has been obstructed, as much cement as possible will be placed from 100 feet below the LBFU-bedrock contact to the top of the core hole.

The volume of Type V cement will be recorded and will not be less than the estimated volume of material required to fill each interval. All cement grout will consist of Type V cement, or equivalent approved in accordance with the UIC Permit.

Certification

I certify under the penalty of law that I have personally examined and am familiar with the information submitted in this document and all attachments and that, based on my inquiry of those individuals immediately responsible for obtaining the information, I believe that the information is true, accurate, and complete. I am aware that there are significant penalties for submitting false information, including the possibliity of fine and imprisonment. (Ref. 40 CFR § 144.32)

Name and Official Title *(Please type or print)*	Signature	Date Signed
Dan Johnson, VP - General Manager		10/3/2019

INSTRUCTIONS FOR FORM 7520-19

This form replaces forms 7520-12 and 7520-14. Use this form only when work is planned or has occurred that affects the well's construction or operation as an injection well, including work on the casing, tubing or packer (or for shallow Class V wells, the subsurface fluid emplacement network). Use one form per injection well. While reports or other information developed by contractors or service companies may be attached, this form must be signed by a responsible entity as described at 40 CFR 144.32. Note: operators closing Class V wells should use Form 7520-17.

NAME, ADDRESS, PHONE AND/OR EMAIL OF PERMITTEE: Enter the name and street address, city/town, state, and ZIP code of the permittee. Also provide an email address (if available) and/or a phone number.

PERMIT OR EPA ID NUMBER: Enter the well identification number or permit number assigned to the well by the EPA or the permitting authority.

API NUMBER: Enter the number assigned by the local jurisdiction (usually a State Oil and Gas Agency) using the American Petroleum Institute standard numbering system.

FULL WELL NAME: Enter the full name of the well or project.

Enter the **STATE** and **COUNTY** where the well is located. For States that do not have counties, use the name of that State's equivalent jurisdiction at a more local level.

WELL LOCATION: Fill in the complete township, range, and section to the nearest quarter-quarter section. A township is north or south of the baseline, and a range is east or west of the principal meridian (e.g., T12N, R34W). Also include the distance, in feet, from the nearest north or south line and nearest east or west line of the quarter-section. Also, enter the **latitude** and **longitude** of the well in decimal degrees, to five or six places if possible; be sure to include a negative sign for the longitude of a well in the Western Hemisphere and a negative sign for the latitude of a well in the Southern Hemisphere.

Enter the **WELL CLASS,** i.e., the class of injection well as defined in 40 CFR 144.6.

TIMING OF THE ACTION: Check ***Notice prior to work*** if the activity has not yet occurred (i.e., is planned). Check ***Report after work*** if the activity described has already occurred. As appropriate, include the date the activity is expected to start or the date the activity was completed. (Note this may not be available, e.g., for a plugging plan submitted with a permit application.)

TYPE OF ACTION: Check the appropriate box to describe the kind of activity being reported. Check ***Well Rework*** for work that was/will be performed on the well after it has already been in operation as an injection well. Check ***Plugging and Abandonment*** to report on plans for or descriptions of final closure/plugging after use as an injection well. Check ***Conversion to a Non-Injection Well*** if the well is to be converted to something other than an injection well.

Provide a **NARRATIVE DESCRIPTION** of the work planned to be performed, or that was performed. The narrative should include a description of the main procedures planned or that occurred during the work activity. A service company report, daily report, or similar document may be attached if it includes all the requested information and is clear and legible.

For well reworks, include the following information: The reason for the well rework; depths of activity; type of activity; changes to injection well configuration, well casing, or cement behind casing; any plug added to the well and its depth; any newly drilled interval and its depth; method(s) to demonstrate that the well has mechanical integrity (as applicable); and any deviations from the approved rework plan (as applicable).

For a well plugging plan, include the following information: Reason for the well plugging; number of plugs placed, and their depths; materials used as plugs (e.g., cast iron bridge plug, cement, cement retainer); method to set plugs; and wait-on-cement times, if any. Also provide one or more cost estimates from an independent firm in the business of plugging and abandoning wells to plug the well as described in the plan.

For well plugging affidavit, include the following information: Reason for the well plugging; number of plugs placed, and their depths; materials used as plugs (e.g., cast iron bridge plug, cement, cement retainer); method to set plugs; wait-on-cement times, if any; and any deviations from the approved plugging plan (if applicable).

For conversion to a non-injection well, include the following information: Depths of activity; type of activity; changes to injection well configuration, well casing, or cement behind casing; any plug added to the well and its depth; any newly drilled interval and its depth; depths of new perforations; and method(s) to demonstrate that the well has mechanical integrity (as applicable).

For all of the above activities, include a well sketch depicting the work, results of well tests/logging performed, service company tickets, and any other available information demonstrating how the work was/is to be performed. Also, specify whether depths are below ground surface, relative to Kelly bushing, etc.

CERTIFICATION: This form must be signed and dated by either: a responsible corporate officer for a corporation, by a general partner for a partnership, by the proprietor of a sole proprietorship, or by a principal executive or ranking elected official for a public agency.

PAPERWORK REDUCTION ACT NOTICE: The public reporting and recordkeeping burden for this collection of information is estimated to average between 6.0 and 7.9 hours per response, depending on the injection well class. Burden means the total time, effort, or financial resource expended by persons to generate, maintain, retain, or disclose or provide information to or for a Federal Agency. This includes the time needed to review instructions; develop, acquire, install, and utilize technology and systems for the purposes of collecting, validating, and verifying information, processing and maintaining information, and disclosing and providing information; adjust the existing ways to comply with any previously applicable instructions and requirements; train personnel to be able to respond to the collection of information; search data sources; complete and review the collection of information; and, transmit or otherwise disclose the information. An agency may not conduct or sponsor, and a person is not required to respond to, a collection of information unless it displays a currently valid OMB control number. Send comments on the Agency's need for this information, the accuracy of the provided burden estimates, and any suggested methods for minimizing respondent burden, including the use of automated collection techniques to Director, Collection Strategies Division, U.S. Environmental Protection Agency (2822), 1200 Pennsylvania Ave., NW., Washington, D.C. 20460. Include the OMB control number in any correspondence. Do not send the completed forms to this address.

AS-BUILT COREHOLE 458S

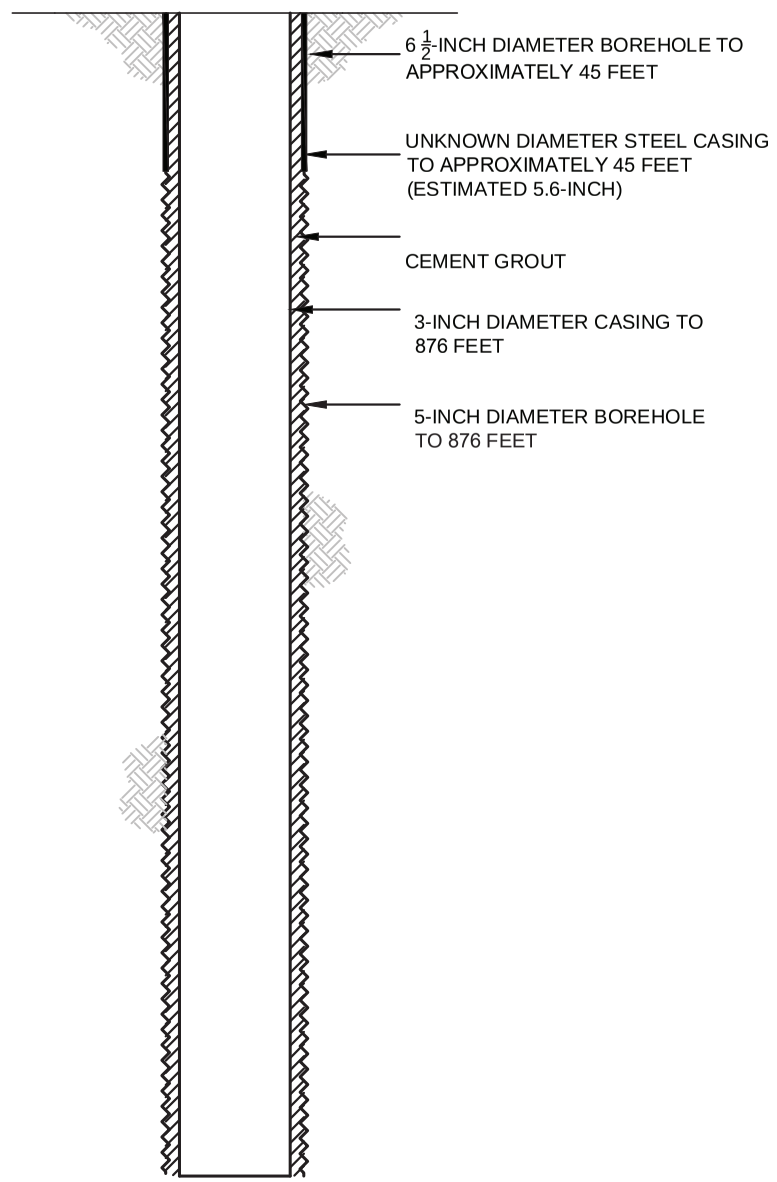

PROPOSED PLUGGING AND ABANDONMENT COREHOLE 458S

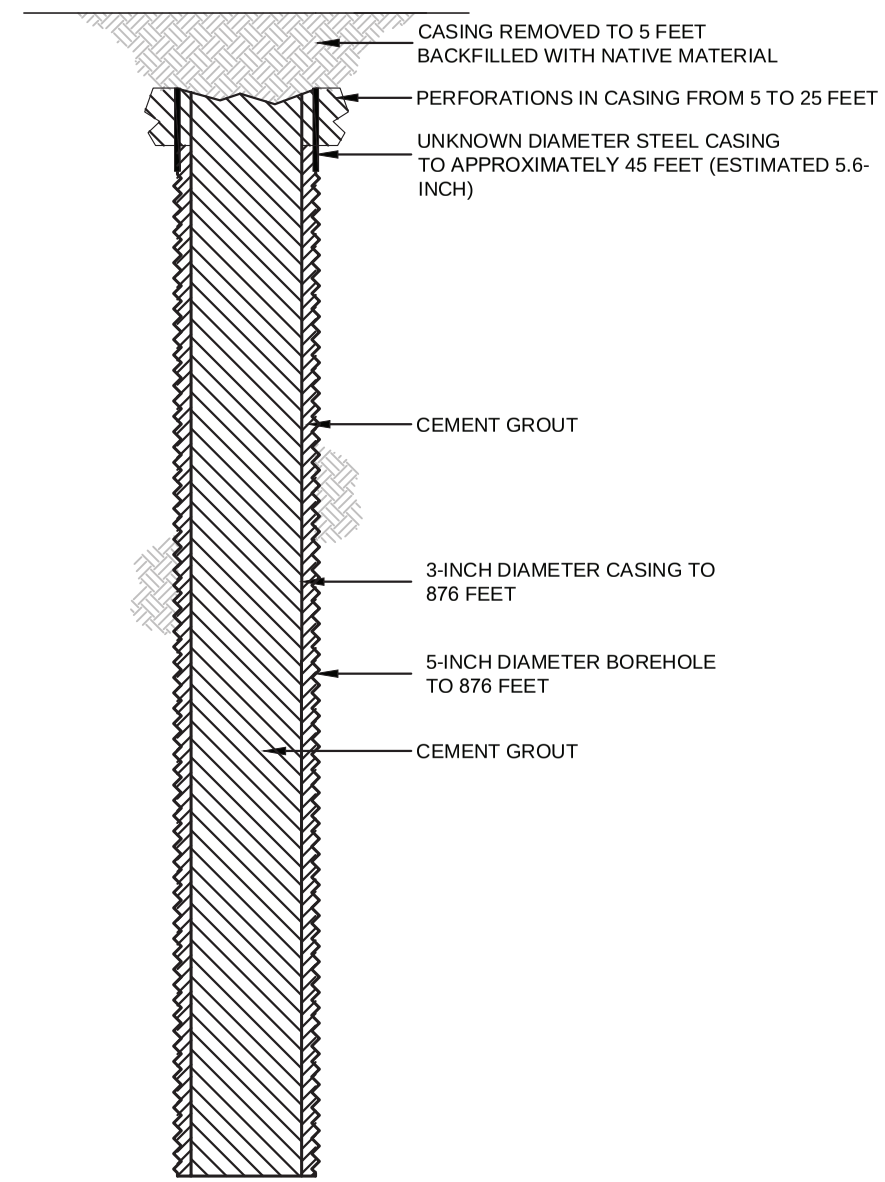

HALEY ALDRICH

FLORENCE COPPER, INC.
FLORENCE, ARIZONA

COREHOLE 458S DIAGRAM

FLORENCE COPPER INC.

NOT TO SCALE
SEPTEMBER 2019

FIGURE 1

MOBINI, GITA Printed: 4/21/2017 12:13 PM Layout: ABANDON (2)
G:\PROJECTS\CURIS RESOURCES\38706-CURIS FEASIBILITY\DRAWINGS\EPA\WELL\ABANDON\448S_ABANDON.DWG

OMB No. 2040-0042 Approval Expires 4/30/2022

United States Environmental Protection Agency

EPA

WELL REWORK RECORD, PLUGGING AND ABANDONMENT PLAN, OR PLUGGING AND ABANDONMENT AFFIDAVIT

Name and Address, Phone Number and/or Email of Permittee

Florence Copper Project
1575 W Hunt Hwy,
Florence, AZ 85132

Permit or EPA ID Number	API Number	Full Well Name
R9UIC-AZ3-FY11-1		482MF

State	County
Arizona	Pinal

Locate well in two directions from nearest lines of quarter section and drilling unit

Latitude 33.0454527

Surface Location

NE **1/4 of** NW **1/4 of Section** 33 **Township** 4S **Range** 9E

Longitude -111.4309963

_____ **ft. from (N/S)** _____ **Line of quarter section**

_____ **ft. from (E/W)** _____ **Line of quarter section.**

Well Class	Timing of Action (pick one)	Type of Action (pick one)
☐ Class I ☐ Class II ☑ Class III ☐ Class V	☑ Notice Prior to Work Date Expected to Commence March 2021 ☐ Report After Work Date Work Ended	☐ Well Rework ☑ Plugging and Abandonment ☐ Conversion to a Non-Injection Well

Provide a narrative description of the work planned to be performed, or that was performed. Use additional pages as necessary. See instructions.

A workover rig capable of performing the required abandonment operations at the required depths will be moved in and set up over the core hole. The core hole will be inspected to determine the depth to which the hole remains open and if any obstructions are present in the core hole; the presence and condition of any existing collar will also be documented. If necessary, the core hole will be cleaned out to a depth of at least 100 feet below the bedrock-LBFU contact to enable placement of cement seals.

If collar is present, an attempt will be made to remove it. If removal of the collar is not feasible, it will be left in the hole and perforated as needed to allow an annular seal to be placed to a depth of at least 25 feet bgs. In areas of agricultural use, the surface casing will be cut at least 5 feet bgs and removed.

If the collar cannot be removed, it will be perforated from at least 20 feet below the bedrock-LBFU contact to at least 20 feet above the contact; from at least 20 feet below the base of the MFGU to at least 20 feet above the top of the MFGU; and from at least 25 feet bgs to 5 feet bgs.

A tremie pipe will be used to place Type V cement in the open core hole from the bottom of the core hole to the top of the core hole. Cement retainers, as described above, will be used to force cement grout into the annulus and behind perforated intervals, as necessary.

If the hole has been obstructed, as much cement as possible will be placed from 100 feet below the LBFU-bedrock contact to the top of the core hole.

The volume of Type V cement will be recorded and will not be less than the estimated volume of material required to fill each interval. All cement grout will consist of Type V cement, or equivalent approved in accordance with the UIC Permit.

Certification

I certify under the penalty of law that I have personally examined and am familiar with the information submitted in this document and all attachments and that, based on my inquiry of those individuals immediately responsible for obtaining the information, I believe that the information is true, accurate, and complete. I am aware that there are significant penalties for submitting false information, including the possibliity of fine and imprisonment. (Ref. 40 CFR § 144.32)

Name and Official Title *(Please type or print)*	Signature	Date Signed
Dan Johnson, VP - General Manager		10/3/2019

INSTRUCTIONS FOR FORM 7520-19

This form replaces forms 7520-12 and 7520-14. Use this form only when work is planned or has occurred that affects the well's construction or operation as an injection well, including work on the casing, tubing or packer (or for shallow Class V wells, the subsurface fluid emplacement network). Use one form per injection well. While reports or other information developed by contractors or service companies may be attached, this form must be signed by a responsible entity as described at 40 CFR 144.32. Note: operators closing Class V wells should use Form 7520-17.

NAME, ADDRESS, PHONE AND/OR EMAIL OF PERMITTEE: Enter the name and street address, city/town, state, and ZIP code of the permittee. Also provide an email address (if available) and/or a phone number.

PERMIT OR EPA ID NUMBER: Enter the well identification number or permit number assigned to the well by the EPA or the permitting authority.

API NUMBER: Enter the number assigned by the local jurisdiction (usually a State Oil and Gas Agency) using the American Petroleum Institute standard numbering system.

FULL WELL NAME: Enter the full name of the well or project.

Enter the **STATE** and **COUNTY** where the well is located. For States that do not have counties, use the name of that State's equivalent jurisdiction at a more local level.

WELL LOCATION: Fill in the complete township, range, and section to the nearest quarter-quarter section. A township is north or south of the baseline, and a range is east or west of the principal meridian (e.g., T12N, R34W). Also include the distance, in feet, from the nearest north or south line and nearest east or west line of the quarter-section. Also, enter the **latitude** and **longitude** of the well in decimal degrees, to five or six places if possible; be sure to include a negative sign for the longitude of a well in the Western Hemisphere and a negative sign for the latitude of a well in the Southern Hemisphere.

Enter the **WELL CLASS,** i.e., the class of injection well as defined in 40 CFR 144.6.

TIMING OF THE ACTION: Check ***Notice prior to work*** if the activity has not yet occurred (i.e., is planned). Check ***Report after work*** if the activity described has already occurred. As appropriate, include the date the activity is expected to start or the date the activity was completed. (Note this may not be available, e.g., for a plugging plan submitted with a permit application.)

TYPE OF ACTION: Check the appropriate box to describe the kind of activity being reported. Check ***Well Rework*** for work that was/will be performed on the well after it has already been in operation as an injection well. Check ***Plugging and Abandonment*** to report on plans for or descriptions of final closure/plugging after use as an injection well. Check ***Conversion to a Non-Injection Well*** if the well is to be converted to something other than an injection well.

Provide a **NARRATIVE DESCRIPTION** of the work planned to be performed, or that was performed. The narrative should include a description of the main procedures planned or that occurred during the work activity. A service company report, daily report, or similar document may be attached if it includes all the requested information and is clear and legible.

For well reworks, include the following information: The reason for the well rework; depths of activity; type of activity; changes to injection well configuration, well casing, or cement behind casing; any plug added to the well and its depth; any newly drilled interval and its depth; method(s) to demonstrate that the well has mechanical integrity (as applicable); and any deviations from the approved rework plan (as applicable).

For a well plugging plan, include the following information: Reason for the well plugging; number of plugs placed, and their depths; materials used as plugs (e.g., cast iron bridge plug, cement, cement retainer); method to set plugs; and wait-on-cement times, if any. Also provide one or more cost estimates from an independent firm in the business of plugging and abandoning wells to plug the well as described in the plan.

For well plugging affidavit, include the following information: Reason for the well plugging; number of plugs placed, and their depths; materials used as plugs (e.g., cast iron bridge plug, cement, cement retainer); method to set plugs; wait-on-cement times, if any; and any deviations from the approved plugging plan (if applicable).

For conversion to a non-injection well, include the following information: Depths of activity; type of activity; changes to injection well configuration, well casing, or cement behind casing; any plug added to the well and its depth; any newly drilled interval and its depth; depths of new perforations; and method(s) to demonstrate that the well has mechanical integrity (as applicable).

For all of the above activities, include a well sketch depicting the work, results of well tests/logging performed, service company tickets, and any other available information demonstrating how the work was/is to be performed. Also, specify whether depths are below ground surface, relative to Kelly bushing, etc.

CERTIFICATION: This form must be signed and dated by either: a responsible corporate officer for a corporation, by a general partner for a partnership, by the proprietor of a sole proprietorship, or by a principal executive or ranking elected official for a public agency.

PAPERWORK REDUCTION ACT NOTICE: The public reporting and recordkeeping burden for this collection of information is estimated to average between 6.0 and 7.9 hours per response, depending on the injection well class. Burden means the total time, effort, or financial resource expended by persons to generate, maintain, retain, or disclose or provide information to or for a Federal Agency. This includes the time needed to review instructions; develop, acquire, install, and utilize technology and systems for the purposes of collecting, validating, and verifying information, processing and maintaining information, and disclosing and providing information; adjust the existing ways to comply with any previously applicable instructions and requirements; train personnel to be able to respond to the collection of information; search data sources; complete and review the collection of information; and, transmit or otherwise disclose the information. An agency may not conduct or sponsor, and a person is not required to respond to, a collection of information unless it displays a currently valid OMB control number. Send comments on the Agency's need for this information, the accuracy of the provided burden estimates, and any suggested methods for minimizing respondent burden, including the use of automated collection techniques to Director, Collection Strategies Division, U.S. Environmental Protection Agency (2822), 1200 Pennsylvania Ave., NW., Washington, D.C. 20460. Include the OMB control number in any correspondence. Do not send the completed forms to this address.

AS-BUILT COREHOLE 482MF

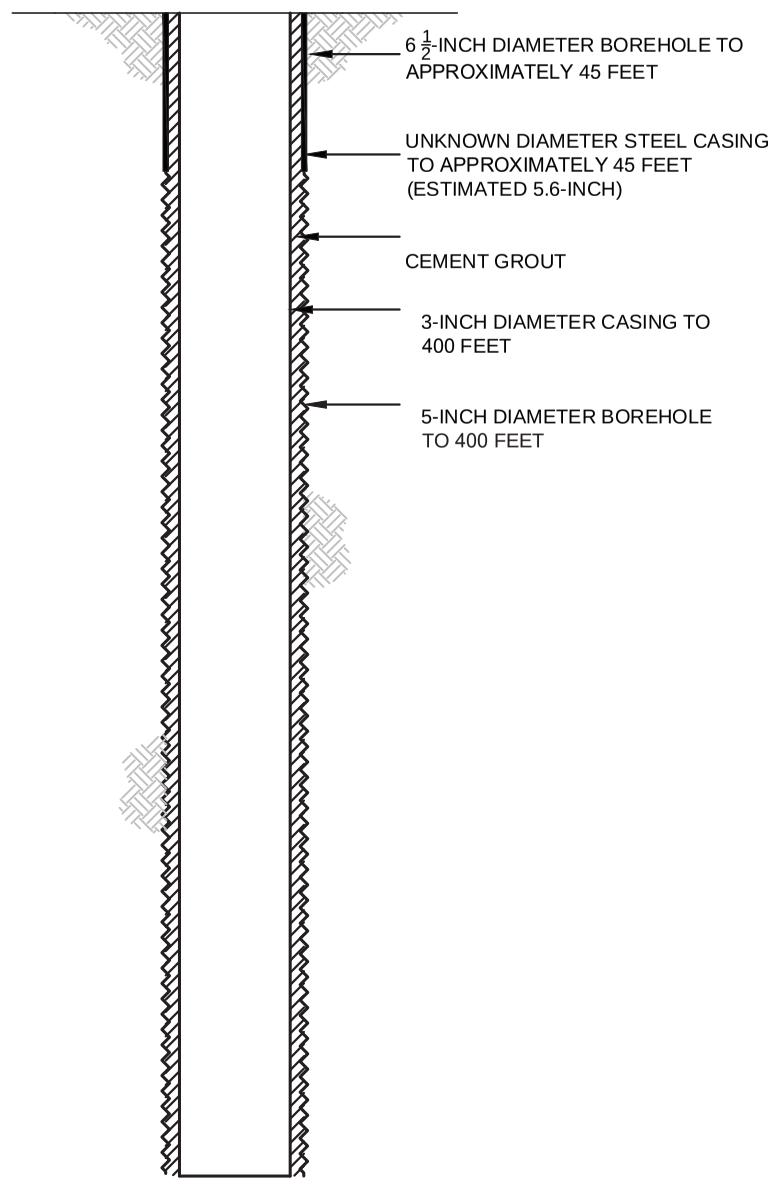

PROPOSED PLUGGING AND ABANDONMENT COREHOLE 482MF

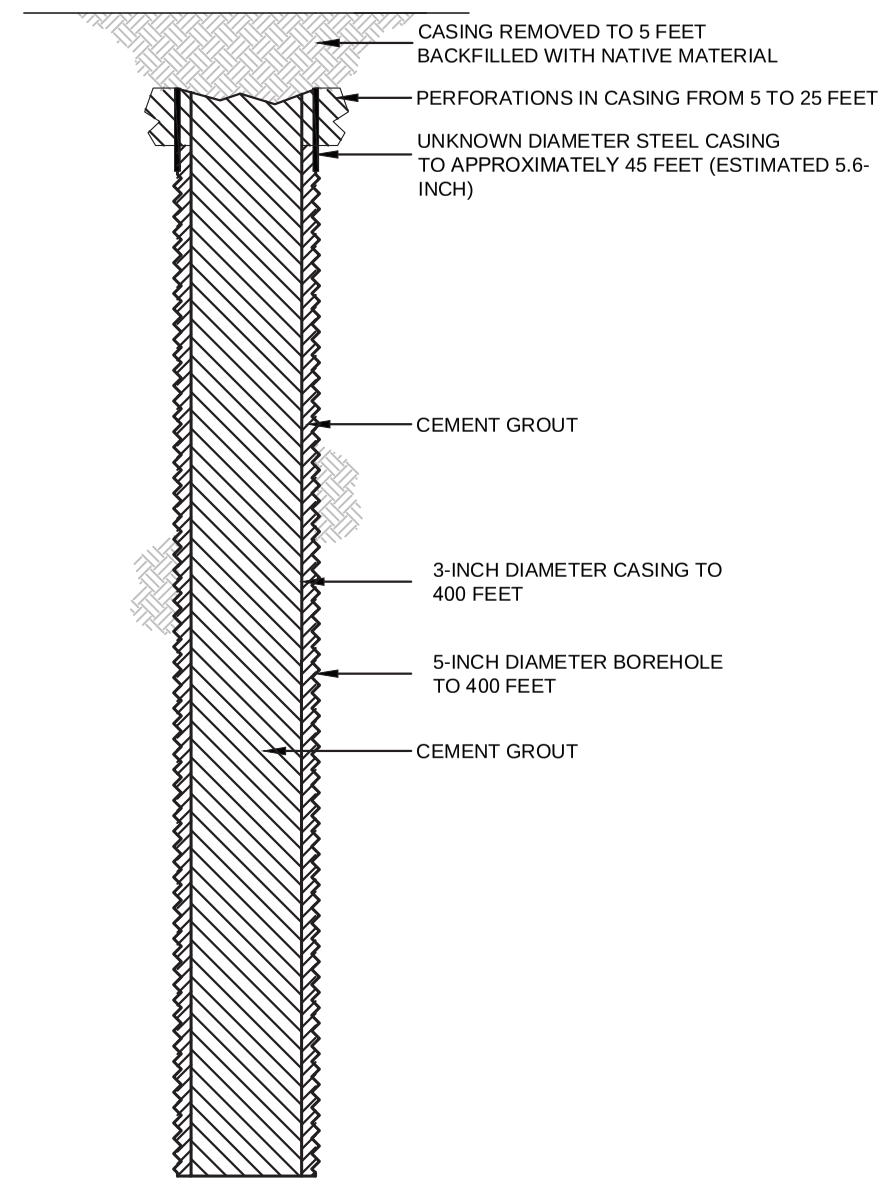

HALEY ALDRICH

FLORENCE COPPER, INC.
FLORENCE, ARIZONA

COREHOLE 482MF DIAGRAM

FLORENCE COPPER INC.

NOT TO SCALE
SEPTEMBER 2019

FIGURE 1

MOBINI, GITA Printed: 4/21/2017 12:13 PM Layout: ABANDON (2)
G:\PROJECTS\CURIS RESOURCES\38706-CURIS FEASIBILITY\DRAWINGS\EPA\WELL\ABANDON\448S_ABANDON.DWG

OMB No. 2040-0042 Approval Expires 4/30/2022

United States Environmental Protection Agency

WELL REWORK RECORD, PLUGGING AND ABANDONMENT PLAN, OR PLUGGING AND ABANDONMENT AFFIDAVIT

Name and Address, Phone Number and/or Email of Permittee

Florence Copper Project
1575 W Hunt Hwy,
Florence, AZ 85132

Permit or EPA ID Number	API Number	Full Well Name
R9UIC-AZ3-FY11-1		483MF

State	County
Arizona	Pinal

Locate well in two directions from nearest lines of quarter section and drilling unit

Surface Location

NE 1/4 of NW 1/4 of Section 33 Township 4S Range 9E

Latitude 33.04559302

Longitude -111.4318114

ft. from (N/S) Line of quarter section

ft. from (E/W) Line of quarter section.

Well Class	Timing of Action (pick one)	Type of Action (pick one)
☐ Class I ☐ Class II ☑ Class III ☐ Class V	☑ Notice Prior to Work Date Expected to Commence March 2021 ☐ Report After Work Date Work Ended	☐ Well Rework ☑ Plugging and Abandonment ☐ Conversion to a Non-Injection Well

Provide a narrative description of the work planned to be performed, or that was performed. Use additional pages as necessary. See instructions.

A workover rig capable of performing the required abandonment operations at the required depths will be moved in and set up over the core hole. The core hole will be inspected to determine the depth to which the hole remains open and if any obstructions are present in the core hole; the presence and condition of any existing collar will also be documented. If necessary, the core hole will be cleaned out to a depth of at least 100 feet below the bedrock-LBFU contact to enable placement of cement seals.

If collar is present, an attempt will be made to remove it. If removal of the collar is not feasible, it will be left in the hole and perforated as needed to allow an annular seal to be placed to a depth of at least 25 feet bgs. In areas of agricultural use, the surface casing will be cut at least 5 feet bgs and removed.

If the collar cannot be removed, it will be perforated from at least 20 feet below the bedrock-LBFU contact to at least 20 feet above the contact; from at least 20 feet below the base of the MFGU to at least 20 feet above the top of the MFGU; and from at least 25 feet bgs to 5 feet bgs.

A tremie pipe will be used to place Type V cement in the open core hole from the bottom of the core hole to the top of the core hole. Cement retainers, as described above, will be used to force cement grout into the annulus and behind perforated intervals, as necessary.

If the hole has been obstructed, as much cement as possible will be placed from 100 feet below the LBFU-bedrock contact to the top of the core hole.

The volume of Type V cement will be recorded and will not be less than the estimated volume of material required to fill each interval. All cement grout will consist of Type V cement, or equivalent approved in accordance with the UIC Permit.

Certification

I certify under the penalty of law that I have personally examined and am familiar with the information submitted in this document and all attachments and that, based on my inquiry of those individuals immediately responsible for obtaining the information, I believe that the information is true, accurate, and complete. I am aware that there are significant penalties for submitting false information, including the possibliity of fine and imprisonment. (Ref. 40 CFR § 144.32)

Name and Official Title *(Please type or print)*	Signature	Date Signed
Dan Johnson, VP - General Manager		10/3/2019

INSTRUCTIONS FOR FORM 7520-19

This form replaces forms 7520-12 and 7520-14. Use this form only when work is planned or has occurred that affects the well's construction or operation as an injection well, including work on the casing, tubing or packer (or for shallow Class V wells, the subsurface fluid emplacement network). Use one form per injection well. While reports or other information developed by contractors or service companies may be attached, this form must be signed by a responsible entity as described at 40 CFR 144.32. Note: operators closing Class V wells should use Form 7520-17.

NAME, ADDRESS, PHONE AND/OR EMAIL OF PERMITTEE: Enter the name and street address, city/town, state, and ZIP code of the permittee. Also provide an email address (if available) and/or a phone number.

PERMIT OR EPA ID NUMBER: Enter the well identification number or permit number assigned to the well by the EPA or the permitting authority.

API NUMBER: Enter the number assigned by the local jurisdiction (usually a State Oil and Gas Agency) using the American Petroleum Institute standard numbering system.

FULL WELL NAME: Enter the full name of the well or project.

Enter the **STATE** and **COUNTY** where the well is located. For States that do not have counties, use the name of that State's equivalent jurisdiction at a more local level.

WELL LOCATION: Fill in the complete township, range, and section to the nearest quarter-quarter section. A township is north or south of the baseline, and a range is east or west of the principal meridian (e.g., T12N, R34W). Also include the distance, in feet, from the nearest north or south line and nearest east or west line of the quarter-section. Also, enter the **latitude** and **longitude** of the well in decimal degrees, to five or six places if possible; be sure to include a negative sign for the longitude of a well in the Western Hemisphere and a negative sign for the latitude of a well in the Southern Hemisphere.

Enter the **WELL CLASS,** i.e., the class of injection well as defined in 40 CFR 144.6.

TIMING OF THE ACTION: Check ***Notice prior to work*** if the activity has not yet occurred (i.e., is planned). Check ***Report after work*** if the activity described has already occurred. As appropriate, include the date the activity is expected to start or the date the activity was completed. (Note this may not be available, e.g., for a plugging plan submitted with a permit application.)

TYPE OF ACTION: Check the appropriate box to describe the kind of activity being reported. Check ***Well Rework*** for work that was/will be performed on the well after it has already been in operation as an injection well. Check ***Plugging and Abandonment*** to report on plans for or descriptions of final closure/plugging after use as an injection well. Check ***Conversion to a Non-Injection Well*** if the well is to be converted to something other than an injection well.

Provide a **NARRATIVE DESCRIPTION** of the work planned to be performed, or that was performed. The narrative should include a description of the main procedures planned or that occurred during the work activity. A service company report, daily report, or similar document may be attached if it includes all the requested information and is clear and legible.

For well reworks, include the following information: The reason for the well rework; depths of activity; type of activity; changes to injection well configuration, well casing, or cement behind casing; any plug added to the well and its depth; any newly drilled interval and its depth; method(s) to demonstrate that the well has mechanical integrity (as applicable); and any deviations from the approved rework plan (as applicable).

For a well plugging plan, include the following information: Reason for the well plugging; number of plugs placed, and their depths; materials used as plugs (e.g., cast iron bridge plug, cement, cement retainer); method to set plugs; and wait-on-cement times, if any. Also provide one or more cost estimates from an independent firm in the business of plugging and abandoning wells to plug the well as described in the plan.

For well plugging affidavit, include the following information: Reason for the well plugging; number of plugs placed, and their depths; materials used as plugs (e.g., cast iron bridge plug, cement, cement retainer); method to set plugs; wait-on-cement times, if any; and any deviations from the approved plugging plan (if applicable).

For conversion to a non-injection well, include the following information: Depths of activity; type of activity; changes to injection well configuration, well casing, or cement behind casing; any plug added to the well and its depth; any newly drilled interval and its depth; depths of new perforations; and method(s) to demonstrate that the well has mechanical integrity (as applicable).

For all of the above activities, include a well sketch depicting the work, results of well tests/logging performed, service company tickets, and any other available information demonstrating how the work was/is to be performed. Also, specify whether depths are below ground surface, relative to Kelly bushing, etc.

CERTIFICATION: This form must be signed and dated by either: a responsible corporate officer for a corporation, by a general partner for a partnership, by the proprietor of a sole proprietorship, or by a principal executive or ranking elected official for a public agency.

PAPERWORK REDUCTION ACT NOTICE: The public reporting and recordkeeping burden for this collection of information is estimated to average between 6.0 and 7.9 hours per response, depending on the injection well class. Burden means the total time, effort, or financial resource expended by persons to generate, maintain, retain, or disclose or provide information to or for a Federal Agency. This includes the time needed to review instructions; develop, acquire, install, and utilize technology and systems for the purposes of collecting, validating, and verifying information, processing and maintaining information, and disclosing and providing information; adjust the existing ways to comply with any previously applicable instructions and requirements; train personnel to be able to respond to the collection of information; search data sources; complete and review the collection of information; and, transmit or otherwise disclose the information. An agency may not conduct or sponsor, and a person is not required to respond to, a collection of information unless it displays a currently valid OMB control number. Send comments on the Agency's need for this information, the accuracy of the provided burden estimates, and any suggested methods for minimizing respondent burden, including the use of automated collection techniques to Director, Collection Strategies Division, U.S. Environmental Protection Agency (2822), 1200 Pennsylvania Ave., NW., Washington, D.C. 20460. Include the OMB control number in any correspondence. Do not send the completed forms to this address.

AS-BUILT COREHOLE 483MF

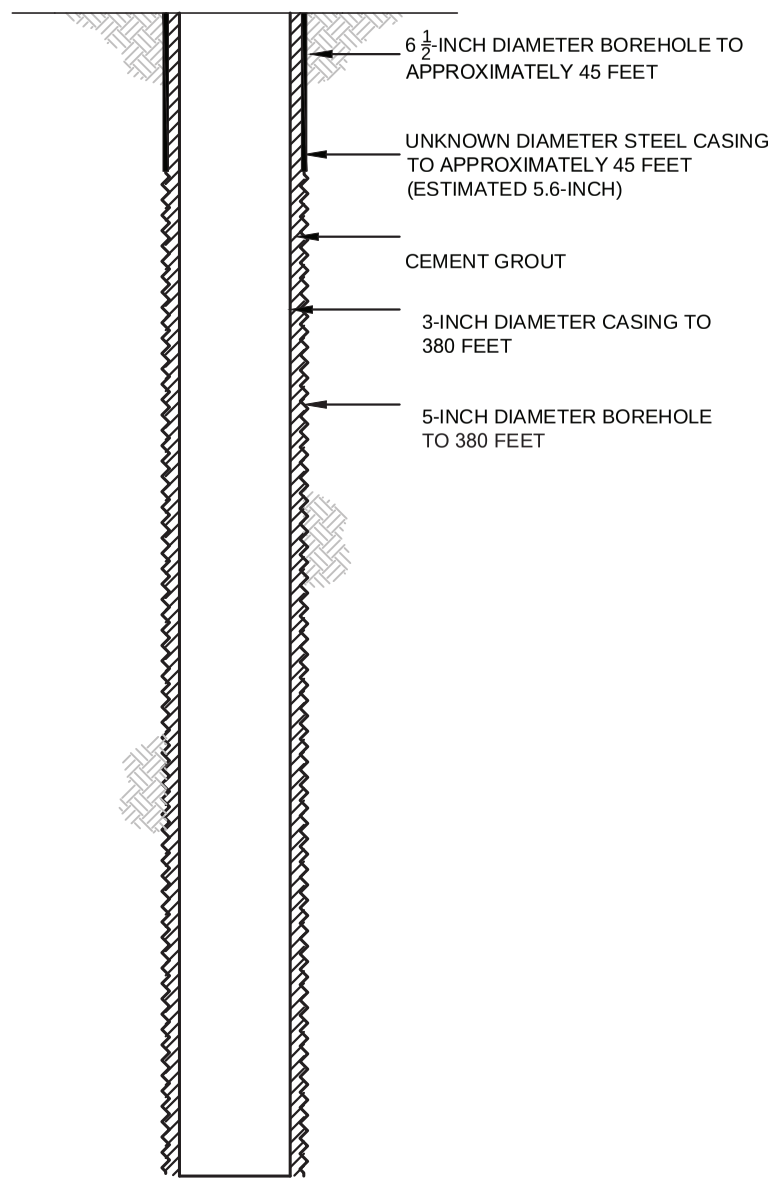

PROPOSED PLUGGING AND ABANDONMENT COREHOLE 483MF

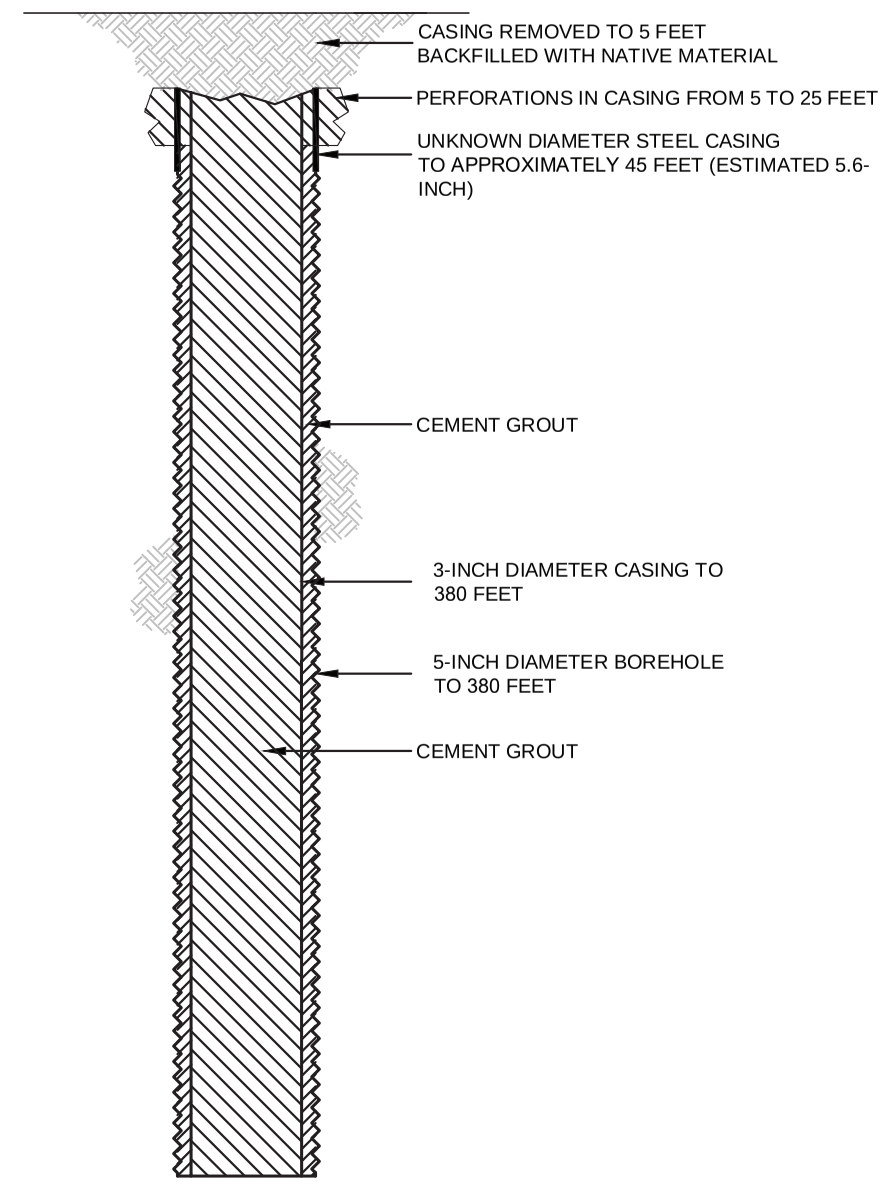

HALEY ALDRICH

FLORENCE COPPER, INC.
FLORENCE, ARIZONA

COREHOLE 483MF DIAGRAM

FLORENCE COPPER INC.

NOT TO SCALE
SEPTEMBER 2019

FIGURE 1

MOBINI, GITA Printed: 4/21/2017 12:13 PM Layout: ABANDON (2)
G:\PROJECTS\CURIS RESOURCES\38706-CURIS FEASIBILITY\DRAWINGS\EPA\WELL\ABANDON\448S_ABANDON.DWG

OMB No. 2040-0042 Approval Expires 4/30/2022

United States Environmental Protection Agency

WELL REWORK RECORD, PLUGGING AND ABANDONMENT PLAN, OR PLUGGING AND ABANDONMENT AFFIDAVIT

Name and Address, Phone Number and/or Email of Permittee

Florence Copper Project
1575 W Hunt Hwy,
Florence, AZ 85132

Permit or EPA ID Number	API Number	Full Well Name
R9UIC-AZ3-FY11-1		484MF

State	County
Arizona	Pinal

Locate well in two directions from nearest lines of quarter section and drilling unit

Surface Location

NE 1/4 of NW 1/4 of Section 33 Township 4S Range 9E

Latitude 33.04559619

Longitude -111.4326272

ft. from (N/S) Line of quarter section

ft. from (E/W) Line of quarter section.

Well Class	Timing of Action (pick one)	Type of Action (pick one)
☐ Class I ☐ Class II ☑ Class III ☐ Class V	☑ Notice Prior to Work Date Expected to Commence March 2021 ☐ Report After Work Date Work Ended	☐ Well Rework ☑ Plugging and Abandonment ☐ Conversion to a Non-Injection Well

Provide a narrative description of the work planned to be performed, or that was performed. Use additional pages as necessary. See instructions.

A workover rig capable of performing the required abandonment operations at the required depths will be moved in and set up over the core hole. The core hole will be inspected to determine the depth to which the hole remains open and if any obstructions are present in the core hole; the presence and condition of any existing collar will also be documented. If necessary, the core hole will be cleaned out to a depth of at least 100 feet below the bedrock-LBFU contact to enable placement of cement seals.

If collar is present, an attempt will be made to remove it. If removal of the collar is not feasible, it will be left in the hole and perforated as needed to allow an annular seal to be placed to a depth of at least 25 feet bgs. In areas of agricultural use, the surface casing will be cut at least 5 feet bgs and removed.

If the collar cannot be removed, it will be perforated from at least 20 feet below the bedrock-LBFU contact to at least 20 feet above the contact; from at least 20 feet below the base of the MFGU to at least 20 feet above the top of the MFGU; and from at least 25 feet bgs to 5 feet bgs.

A tremie pipe will be used to place Type V cement in the open core hole from the bottom of the core hole to the top of the core hole. Cement retainers, as described above, will be used to force cement grout into the annulus and behind perforated intervals, as necessary.

If the hole has been obstructed, as much cement as possible will be placed from 100 feet below the LBFU-bedrock contact to the top of the core hole.

The volume of Type V cement will be recorded and will not be less than the estimated volume of material required to fill each interval. All cement grout will consist of Type V cement, or equivalent approved in accordance with the UIC Permit.

Certification

I certify under the penalty of law that I have personally examined and am familiar with the information submitted in this document and all attachments and that, based on my inquiry of those individuals immediately responsible for obtaining the information, I believe that the information is true, accurate, and complete. I am aware that there are significant penalties for submitting false information, including the possibliity of fine and imprisonment. (Ref. 40 CFR § 144.32)

Name and Official Title *(Please type or print)*	Signature	Date Signed
Dan Johnson, VP - General Manager		10/3/2019

INSTRUCTIONS FOR FORM 7520-19

This form replaces forms 7520-12 and 7520-14. Use this form only when work is planned or has occurred that affects the well's construction or operation as an injection well, including work on the casing, tubing or packer (or for shallow Class V wells, the subsurface fluid emplacement network). Use one form per injection well. While reports or other information developed by contractors or service companies may be attached, this form must be signed by a responsible entity as described at 40 CFR 144.32. Note: operators closing Class V wells should use Form 7520-17.

NAME, ADDRESS, PHONE AND/OR EMAIL OF PERMITTEE: Enter the name and street address, city/town, state, and ZIP code of the permittee. Also provide an email address (if available) and/or a phone number.

PERMIT OR EPA ID NUMBER: Enter the well identification number or permit number assigned to the well by the EPA or the permitting authority.

API NUMBER: Enter the number assigned by the local jurisdiction (usually a State Oil and Gas Agency) using the American Petroleum Institute standard numbering system.

FULL WELL NAME: Enter the full name of the well or project.

Enter the **STATE** and **COUNTY** where the well is located. For States that do not have counties, use the name of that State's equivalent jurisdiction at a more local level.

WELL LOCATION: Fill in the complete township, range, and section to the nearest quarter-quarter section. A township is north or south of the baseline, and a range is east or west of the principal meridian (e.g., T12N, R34W). Also include the distance, in feet, from the nearest north or south line and nearest east or west line of the quarter-section. Also, enter the **latitude** and **longitude** of the well in decimal degrees, to five or six places if possible; be sure to include a negative sign for the longitude of a well in the Western Hemisphere and a negative sign for the latitude of a well in the Southern Hemisphere.

Enter the **WELL CLASS,** i.e., the class of injection well as defined in 40 CFR 144.6.

TIMING OF THE ACTION: Check ***Notice prior to work*** if the activity has not yet occurred (i.e., is planned). Check ***Report after work*** if the activity described has already occurred. As appropriate, include the date the activity is expected to start or the date the activity was completed. (Note this may not be available, e.g., for a plugging plan submitted with a permit application.)

TYPE OF ACTION: Check the appropriate box to describe the kind of activity being reported. Check ***Well Rework*** for work that was/will be performed on the well after it has already been in operation as an injection well. Check ***Plugging and Abandonment*** to report on plans for or descriptions of final closure/plugging after use as an injection well. Check ***Conversion to a Non-Injection Well*** if the well is to be converted to something other than an injection well.

Provide a **NARRATIVE DESCRIPTION** of the work planned to be performed, or that was performed. The narrative should include a description of the main procedures planned or that occurred during the work activity. A service company report, daily report, or similar document may be attached if it includes all the requested information and is clear and legible.

For well reworks, include the following information: The reason for the well rework; depths of activity; type of activity; changes to injection well configuration, well casing, or cement behind casing; any plug added to the well and its depth; any newly drilled interval and its depth; method(s) to demonstrate that the well has mechanical integrity (as applicable); and any deviations from the approved rework plan (as applicable).

For a well plugging plan, include the following information: Reason for the well plugging; number of plugs placed, and their depths; materials used as plugs (e.g., cast iron bridge plug, cement, cement retainer); method to set plugs; and wait-on-cement times, if any. Also provide one or more cost estimates from an independent firm in the business of plugging and abandoning wells to plug the well as described in the plan.

For well plugging affidavit, include the following information: Reason for the well plugging; number of plugs placed, and their depths; materials used as plugs (e.g., cast iron bridge plug, cement, cement retainer); method to set plugs; wait-on-cement times, if any; and any deviations from the approved plugging plan (if applicable).

For conversion to a non-injection well, include the following information: Depths of activity; type of activity; changes to injection well configuration, well casing, or cement behind casing; any plug added to the well and its depth; any newly drilled interval and its depth; depths of new perforations; and method(s) to demonstrate that the well has mechanical integrity (as applicable).

For all of the above activities, include a well sketch depicting the work, results of well tests/logging performed, service company tickets, and any other available information demonstrating how the work was/is to be performed. Also, specify whether depths are below ground surface, relative to Kelly bushing, etc.

CERTIFICATION: This form must be signed and dated by either: a responsible corporate officer for a corporation, by a general partner for a partnership, by the proprietor of a sole proprietorship, or by a principal executive or ranking elected official for a public agency.

PAPERWORK REDUCTION ACT NOTICE: The public reporting and recordkeeping burden for this collection of information is estimated to average between 6.0 and 7.9 hours per response, depending on the injection well class. Burden means the total time, effort, or financial resource expended by persons to generate, maintain, retain, or disclose or provide information to or for a Federal Agency. This includes the time needed to review instructions; develop, acquire, install, and utilize technology and systems for the purposes of collecting, validating, and verifying information, processing and maintaining information, and disclosing and providing information; adjust the existing ways to comply with any previously applicable instructions and requirements; train personnel to be able to respond to the collection of information; search data sources; complete and review the collection of information; and, transmit or otherwise disclose the information. An agency may not conduct or sponsor, and a person is not required to respond to, a collection of information unless it displays a currently valid OMB control number. Send comments on the Agency's need for this information, the accuracy of the provided burden estimates, and any suggested methods for minimizing respondent burden, including the use of automated collection techniques to Director, Collection Strategies Division, U.S. Environmental Protection Agency (2822), 1200 Pennsylvania Ave., NW., Washington, D.C. 20460. Include the OMB control number in any correspondence. Do not send the completed forms to this address.

AS-BUILT COREHOLE 484MF

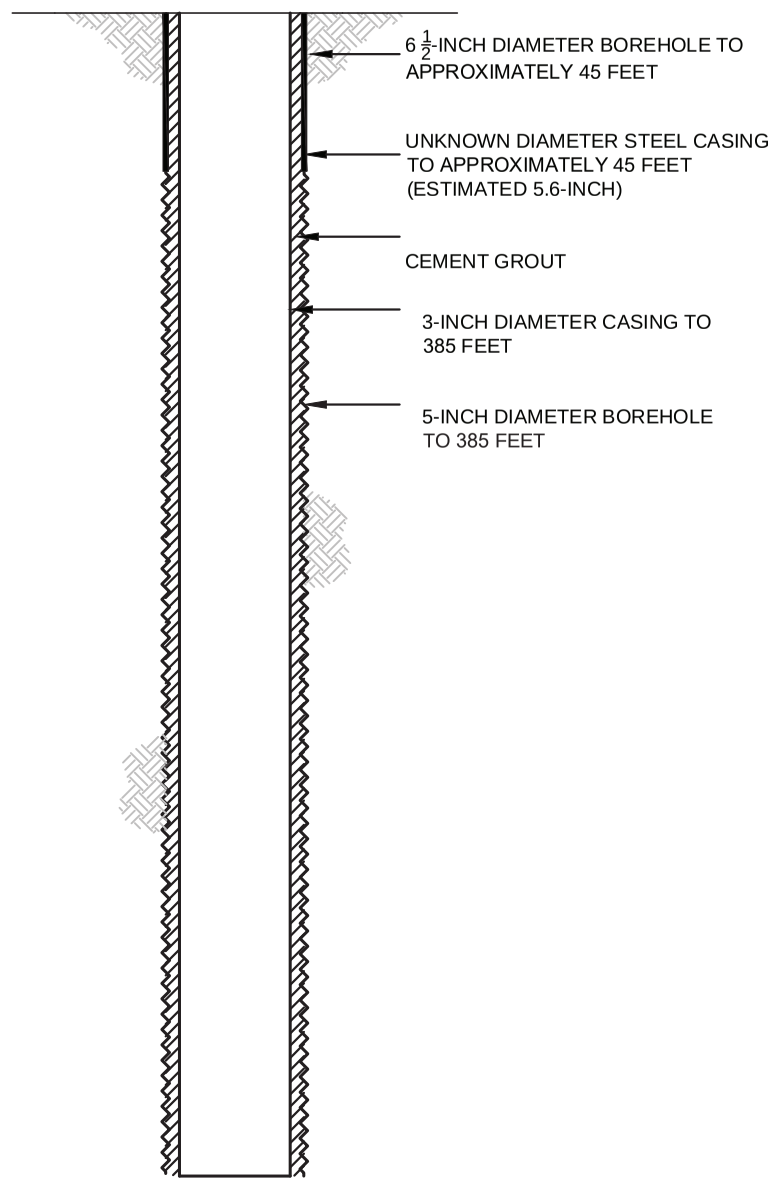

PROPOSED PLUGGING AND ABANDONMENT COREHOLE 484MF

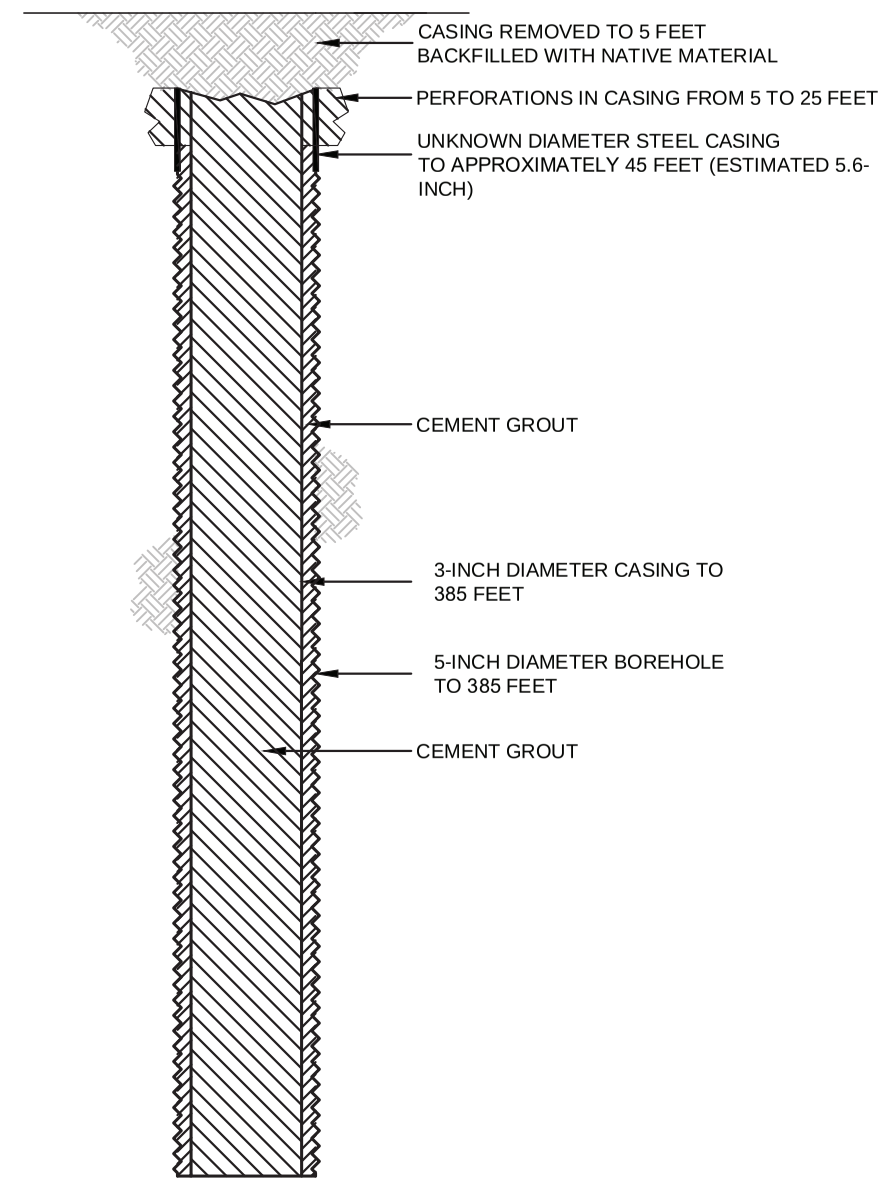

HALEY ALDRICH

FLORENCE COPPER, INC.
FLORENCE, ARIZONA

COREHOLE 484MF DIAGRAM

FLORENCE COPPER INC.

NOT TO SCALE
SEPTEMBER 2019

FIGURE 1

MOBINI, GITA Printed: 4/21/2017 12:13 PM Layout: ABANDON (2)
G:\PROJECTS\CURIS RESOURCES\38706-CURIS FEASIBILITY\DRAWINGS\EPA\WELL\ABANDON\448S_ABANDON.DWG

OMB No. 2040-0042 Approval Expires 4/30/2022

United States Environmental Protection Agency

EPA

WELL REWORK RECORD, PLUGGING AND ABANDONMENT PLAN, OR PLUGGING AND ABANDONMENT AFFIDAVIT

Name and Address, Phone Number and/or Email of Permittee

Florence Copper Project
1575 W Hunt Hwy,
Florence, AZ 85132

Permit or EPA ID Number	API Number	Full Well Name
R9UIC-AZ3-FY11-1		485MF

State	County
Arizona	Pinal

Locate well in two directions from nearest lines of quarter section and drilling unit

Surface Location

NE 1/4 of NW 1/4 of Section 33 Township 4S Range 9E

Latitude 33.04559935

Longitude -111.433443

_____ ft. from (N/S) _____ Line of quarter section

_____ ft. from (E/W) _____ Line of quarter section.

Well Class	Timing of Action (pick one)	Type of Action (pick one)
☐ Class I ☐ Class II ☑ Class III ☐ Class V	☑ Notice Prior to Work Date Expected to Commence March 2021 ☐ Report After Work Date Work Ended	☐ Well Rework ☑ Plugging and Abandonment ☐ Conversion to a Non-Injection Well

Provide a narrative description of the work planned to be performed, or that was performed. Use additional pages as necessary. See instructions.

A workover rig capable of performing the required abandonment operations at the required depths will be moved in and set up over the core hole. The core hole will be inspected to determine the depth to which the hole remains open and if any obstructions are present in the core hole; the presence and condition of any existing collar will also be documented. If necessary, the core hole will be cleaned out to a depth of at least 100 feet below the bedrock-LBFU contact to enable placement of cement seals.

If collar is present, an attempt will be made to remove it. If removal of the collar is not feasible, it will be left in the hole and perforated as needed to allow an annular seal to be placed to a depth of at least 25 feet bgs. In areas of agricultural use, the surface casing will be cut at least 5 feet bgs and removed.

If the collar cannot be removed, it will be perforated from at least 20 feet below the bedrock-LBFU contact to at least 20 feet above the contact; from at least 20 feet below the base of the MFGU to at least 20 feet above the top of the MFGU; and from at least 25 feet bgs to 5 feet bgs.

A tremie pipe will be used to place Type V cement in the open core hole from the bottom of the core hole to the top of the core hole. Cement retainers, as described above, will be used to force cement grout into the annulus and behind perforated intervals, as necessary.

If the hole has been obstructed, as much cement as possible will be placed from 100 feet below the LBFU-bedrock contact to the top of the core hole.

The volume of Type V cement will be recorded and will not be less than the estimated volume of material required to fill each interval. All cement grout will consist of Type V cement, or equivalent approved in accordance with the UIC Permit.

Certification

I certify under the penalty of law that I have personally examined and am familiar with the information submitted in this document and all attachments and that, based on my inquiry of those individuals immediately responsible for obtaining the information, I believe that the information is true, accurate, and complete. I am aware that there are significant penalties for submitting false information, including the possibliity of fine and imprisonment. (Ref. 40 CFR § 144.32)

Name and Official Title *(Please type or print)*	Signature	Date Signed
Dan Johnson, VP - General Manager		10/3/2019

INSTRUCTIONS FOR FORM 7520-19

This form replaces forms 7520-12 and 7520-14. Use this form only when work is planned or has occurred that affects the well's construction or operation as an injection well, including work on the casing, tubing or packer (or for shallow Class V wells, the subsurface fluid emplacement network). Use one form per injection well. While reports or other information developed by contractors or service companies may be attached, this form must be signed by a responsible entity as described at 40 CFR 144.32. Note: operators closing Class V wells should use Form 7520-17.

NAME, ADDRESS, PHONE AND/OR EMAIL OF PERMITTEE: Enter the name and street address, city/town, state, and ZIP code of the permittee. Also provide an email address (if available) and/or a phone number.

PERMIT OR EPA ID NUMBER: Enter the well identification number or permit number assigned to the well by the EPA or the permitting authority.

API NUMBER: Enter the number assigned by the local jurisdiction (usually a State Oil and Gas Agency) using the American Petroleum Institute standard numbering system.

FULL WELL NAME: Enter the full name of the well or project.

Enter the **STATE** and **COUNTY** where the well is located. For States that do not have counties, use the name of that State's equivalent jurisdiction at a more local level.

WELL LOCATION: Fill in the complete township, range, and section to the nearest quarter-quarter section. A township is north or south of the baseline, and a range is east or west of the principal meridian (e.g., T12N, R34W). Also include the distance, in feet, from the nearest north or south line and nearest east or west line of the quarter-section. Also, enter the **latitude** and **longitude** of the well in decimal degrees, to five or six places if possible; be sure to include a negative sign for the longitude of a well in the Western Hemisphere and a negative sign for the latitude of a well in the Southern Hemisphere.

Enter the **WELL CLASS,** i.e., the class of injection well as defined in 40 CFR 144.6.

TIMING OF THE ACTION: Check ***Notice prior to work*** if the activity has not yet occurred (i.e., is planned). Check ***Report after work*** if the activity described has already occurred. As appropriate, include the date the activity is expected to start or the date the activity was completed. (Note this may not be available, e.g., for a plugging plan submitted with a permit application.)

TYPE OF ACTION: Check the appropriate box to describe the kind of activity being reported. Check ***Well Rework*** for work that was/will be performed on the well after it has already been in operation as an injection well. Check ***Plugging and Abandonment*** to report on plans for or descriptions of final closure/plugging after use as an injection well. Check ***Conversion to a Non-Injection Well*** if the well is to be converted to something other than an injection well.

Provide a **NARRATIVE DESCRIPTION** of the work planned to be performed, or that was performed. The narrative should include a description of the main procedures planned or that occurred during the work activity. A service company report, daily report, or similar document may be attached if it includes all the requested information and is clear and legible.

For well reworks, include the following information: The reason for the well rework; depths of activity; type of activity; changes to injection well configuration, well casing, or cement behind casing; any plug added to the well and its depth; any newly drilled interval and its depth; method(s) to demonstrate that the well has mechanical integrity (as applicable); and any deviations from the approved rework plan (as applicable).

For a well plugging plan, include the following information: Reason for the well plugging; number of plugs placed, and their depths; materials used as plugs (e.g., cast iron bridge plug, cement, cement retainer); method to set plugs; and wait-on-cement times, if any. Also provide one or more cost estimates from an independent firm in the business of plugging and abandoning wells to plug the well as described in the plan.

For well plugging affidavit, include the following information: Reason for the well plugging; number of plugs placed, and their depths; materials used as plugs (e.g., cast iron bridge plug, cement, cement retainer); method to set plugs; wait-on-cement times, if any; and any deviations from the approved plugging plan (if applicable).

For conversion to a non-injection well, include the following information: Depths of activity; type of activity; changes to injection well configuration, well casing, or cement behind casing; any plug added to the well and its depth; any newly drilled interval and its depth; depths of new perforations; and method(s) to demonstrate that the well has mechanical integrity (as applicable).

For all of the above activities, include a well sketch depicting the work, results of well tests/logging performed, service company tickets, and any other available information demonstrating how the work was/is to be performed. Also, specify whether depths are below ground surface, relative to Kelly bushing, etc.

CERTIFICATION: This form must be signed and dated by either: a responsible corporate officer for a corporation, by a general partner for a partnership, by the proprietor of a sole proprietorship, or by a principal executive or ranking elected official for a public agency.

PAPERWORK REDUCTION ACT NOTICE: The public reporting and recordkeeping burden for this collection of information is estimated to average between 6.0 and 7.9 hours per response, depending on the injection well class. Burden means the total time, effort, or financial resource expended by persons to generate, maintain, retain, or disclose or provide information to or for a Federal Agency. This includes the time needed to review instructions; develop, acquire, install, and utilize technology and systems for the purposes of collecting, validating, and verifying information, processing and maintaining information, and disclosing and providing information; adjust the existing ways to comply with any previously applicable instructions and requirements; train personnel to be able to respond to the collection of information; search data sources; complete and review the collection of information; and, transmit or otherwise disclose the information. An agency may not conduct or sponsor, and a person is not required to respond to, a collection of information unless it displays a currently valid OMB control number. Send comments on the Agency's need for this information, the accuracy of the provided burden estimates, and any suggested methods for minimizing respondent burden, including the use of automated collection techniques to Director, Collection Strategies Division, U.S. Environmental Protection Agency (2822), 1200 Pennsylvania Ave., NW., Washington, D.C. 20460. Include the OMB control number in any correspondence. Do not send the completed forms to this address.

AS-BUILT COREHOLE 485MF

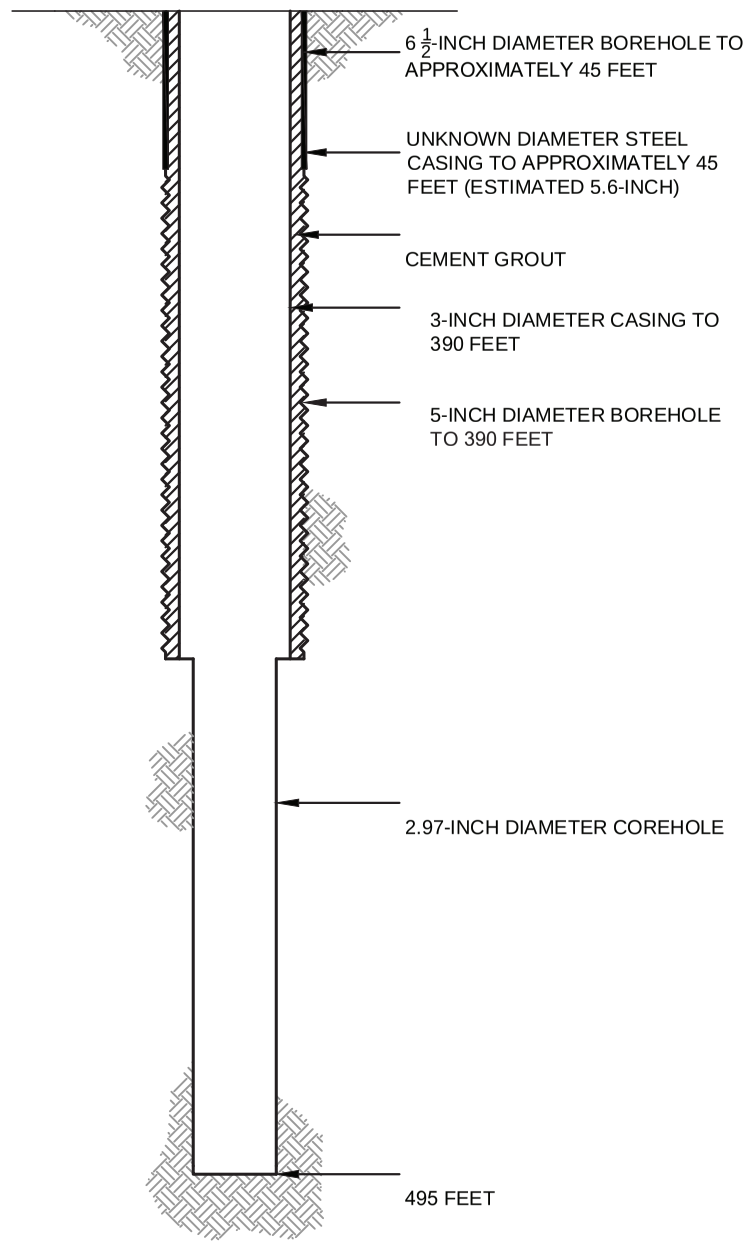

PROPOSED PLUGGING AND ABANDONMENT COREHOLE 485MF

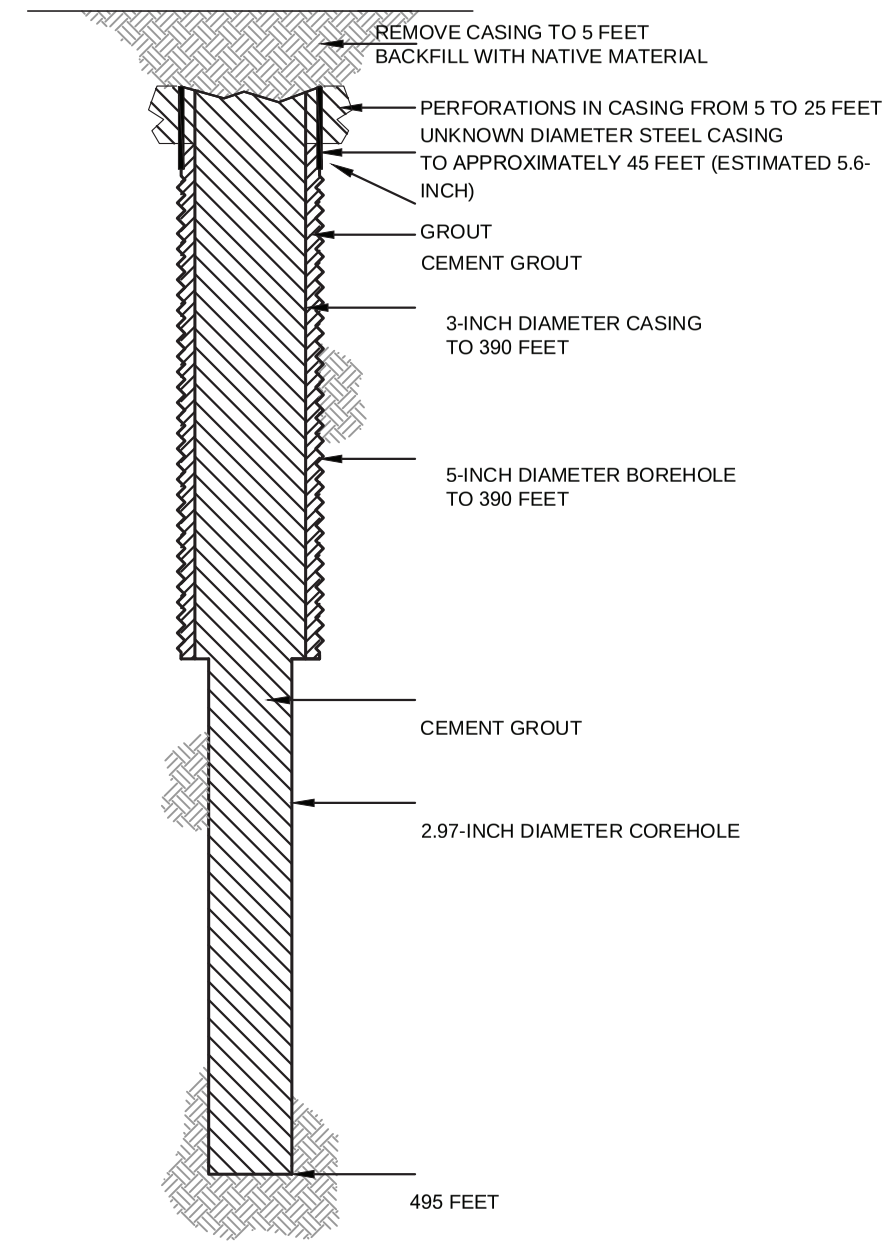

HALEY ALDRICH

FLORENCE COPPER, INC.
FLORENCE, ARIZONA

COREHOLE 485MF DIAGRAM

FLORENCE COPPER INC.

NOT TO SCALE
SEPTEMBER 2019

FIGURE 1

MOBINI, GITA Printed: 4/21/2017 12:00 PM Layout: ABANDON (2)
\PROJECTS\CURIS RESOURCES38706-CURIS FEASIBILITY\DRAWINGS\EPA\WELL ABANDON\415S_ABANDON.DWG

OMB No. 2040-0042 Approval Expires 4/30/2022

United States Environmental Protection Agency

WELL REWORK RECORD, PLUGGING AND ABANDONMENT PLAN, OR PLUGGING AND ABANDONMENT AFFIDAVIT

Name and Address, Phone Number and/or Email of Permittee

Florence Copper Project
1575 W Hunt Hwy,
Florence, AZ 85132

Permit or EPA ID Number	API Number	Full Well Name
R9UIC-AZ3-FY11-1		486MF

State	County
Arizona	Pinal

Locate well in two directions from nearest lines of quarter section and drilling unit

Latitude 33.04560251

Longitude -111.4342589

Surface Location

NW **1/4 of** NW **1/4 of Section** 33 **Township** 4S **Range** 9E

_____ **ft. from (N/S)** _____ **Line of quarter section**

_____ **ft. from (E/W)** _____ **Line of quarter section.**

Well Class	Timing of Action (pick one)	Type of Action (pick one)
☐ Class I ☐ Class II ☑ Class III ☐ Class V	☑ Notice Prior to Work Date Expected to Commence March 2021 ☐ Report After Work Date Work Ended	☐ Well Rework ☑ Plugging and Abandonment ☐ Conversion to a Non-Injection Well

Provide a narrative description of the work planned to be performed, or that was performed. Use additional pages as necessary. See instructions.

A workover rig capable of performing the required abandonment operations at the required depths will be moved in and set up over the core hole. The core hole will be inspected to determine the depth to which the hole remains open and if any obstructions are present in the core hole; the presence and condition of any existing collar will also be documented. If necessary, the core hole will be cleaned out to a depth of at least 100 feet below the bedrock-LBFU contact to enable placement of cement seals.

If collar is present, an attempt will be made to remove it. If removal of the collar is not feasible, it will be left in the hole and perforated as needed to allow an annular seal to be placed to a depth of at least 25 feet bgs. In areas of agricultural use, the surface casing will be cut at least 5 feet bgs and removed.

If the collar cannot be removed, it will be perforated from at least 20 feet below the bedrock-LBFU contact to at least 20 feet above the contact; from at least 20 feet below the base of the MFGU to at least 20 feet above the top of the MFGU; and from at least 25 feet bgs to 5 feet bgs.

A tremie pipe will be used to place Type V cement in the open core hole from the bottom of the core hole to the top of the core hole. Cement retainers, as described above, will be used to force cement grout into the annulus and behind perforated intervals, as necessary.

If the hole has been obstructed, as much cement as possible will be placed from 100 feet below the LBFU-bedrock contact to the top of the core hole.

The volume of Type V cement will be recorded and will not be less than the estimated volume of material required to fill each interval. All cement grout will consist of Type V cement, or equivalent approved in accordance with the UIC Permit.

Certification

I certify under the penalty of law that I have personally examined and am familiar with the information submitted in this document and all attachments and that, based on my inquiry of those individuals immediately responsible for obtaining the information, I believe that the information is true, accurate, and complete. I am aware that there are significant penalties for submitting false information, including the possibliity of fine and imprisonment. (Ref. 40 CFR § 144.32)

Name and Official Title *(Please type or print)*	Signature	Date Signed
Dan Johnson, VP - General Manager		10/3/2019

INSTRUCTIONS FOR FORM 7520-19

This form replaces forms 7520-12 and 7520-14. Use this form only when work is planned or has occurred that affects the well's construction or operation as an injection well, including work on the casing, tubing or packer (or for shallow Class V wells, the subsurface fluid emplacement network). Use one form per injection well. While reports or other information developed by contractors or service companies may be attached, this form must be signed by a responsible entity as described at 40 CFR 144.32. Note: operators closing Class V wells should use Form 7520-17.

NAME, ADDRESS, PHONE AND/OR EMAIL OF PERMITTEE: Enter the name and street address, city/town, state, and ZIP code of the permittee. Also provide an email address (if available) and/or a phone number.

PERMIT OR EPA ID NUMBER: Enter the well identification number or permit number assigned to the well by the EPA or the permitting authority.

API NUMBER: Enter the number assigned by the local jurisdiction (usually a State Oil and Gas Agency) using the American Petroleum Institute standard numbering system.

FULL WELL NAME: Enter the full name of the well or project.

Enter the **STATE** and **COUNTY** where the well is located. For States that do not have counties, use the name of that State's equivalent jurisdiction at a more local level.

WELL LOCATION: Fill in the complete township, range, and section to the nearest quarter-quarter section. A township is north or south of the baseline, and a range is east or west of the principal meridian (e.g., T12N, R34W). Also include the distance, in feet, from the nearest north or south line and nearest east or west line of the quarter-section. Also, enter the **latitude** and **longitude** of the well in decimal degrees, to five or six places if possible; be sure to include a negative sign for the longitude of a well in the Western Hemisphere and a negative sign for the latitude of a well in the Southern Hemisphere.

Enter the **WELL CLASS,** i.e., the class of injection well as defined in 40 CFR 144.6.

TIMING OF THE ACTION: Check ***Notice prior to work*** if the activity has not yet occurred (i.e., is planned). Check ***Report after work*** if the activity described has already occurred. As appropriate, include the date the activity is expected to start or the date the activity was completed. (Note this may not be available, e.g., for a plugging plan submitted with a permit application.)

TYPE OF ACTION: Check the appropriate box to describe the kind of activity being reported. Check ***Well Rework*** for work that was/will be performed on the well after it has already been in operation as an injection well. Check ***Plugging and Abandonment*** to report on plans for or descriptions of final closure/plugging after use as an injection well. Check ***Conversion to a Non-Injection Well*** if the well is to be converted to something other than an injection well.

Provide a **NARRATIVE DESCRIPTION** of the work planned to be performed, or that was performed. The narrative should include a description of the main procedures planned or that occurred during the work activity. A service company report, daily report, or similar document may be attached if it includes all the requested information and is clear and legible.

For well reworks, include the following information: The reason for the well rework; depths of activity; type of activity; changes to injection well configuration, well casing, or cement behind casing; any plug added to the well and its depth; any newly drilled interval and its depth; method(s) to demonstrate that the well has mechanical integrity (as applicable); and any deviations from the approved rework plan (as applicable).

For a well plugging plan, include the following information: Reason for the well plugging; number of plugs placed, and their depths; materials used as plugs (e.g., cast iron bridge plug, cement, cement retainer); method to set plugs; and wait-on-cement times, if any. Also provide one or more cost estimates from an independent firm in the business of plugging and abandoning wells to plug the well as described in the plan.

For well plugging affidavit, include the following information: Reason for the well plugging; number of plugs placed, and their depths; materials used as plugs (e.g., cast iron bridge plug, cement, cement retainer); method to set plugs; wait-on-cement times, if any; and any deviations from the approved plugging plan (if applicable).

For conversion to a non-injection well, include the following information: Depths of activity; type of activity; changes to injection well configuration, well casing, or cement behind casing; any plug added to the well and its depth; any newly drilled interval and its depth; depths of new perforations; and method(s) to demonstrate that the well has mechanical integrity (as applicable).

For all of the above activities, include a well sketch depicting the work, results of well tests/logging performed, service company tickets, and any other available information demonstrating how the work was/is to be performed. Also, specify whether depths are below ground surface, relative to Kelly bushing, etc.

CERTIFICATION: This form must be signed and dated by either: a responsible corporate officer for a corporation, by a general partner for a partnership, by the proprietor of a sole proprietorship, or by a principal executive or ranking elected official for a public agency.

PAPERWORK REDUCTION ACT NOTICE: The public reporting and recordkeeping burden for this collection of information is estimated to average between 6.0 and 7.9 hours per response, depending on the injection well class. Burden means the total time, effort, or financial resource expended by persons to generate, maintain, retain, or disclose or provide information to or for a Federal Agency. This includes the time needed to review instructions; develop, acquire, install, and utilize technology and systems for the purposes of collecting, validating, and verifying information, processing and maintaining information, and disclosing and providing information; adjust the existing ways to comply with any previously applicable instructions and requirements; train personnel to be able to respond to the collection of information; search data sources; complete and review the collection of information; and, transmit or otherwise disclose the information. An agency may not conduct or sponsor, and a person is not required to respond to, a collection of information unless it displays a currently valid OMB control number. Send comments on the Agency's need for this information, the accuracy of the provided burden estimates, and any suggested methods for minimizing respondent burden, including the use of automated collection techniques to Director, Collection Strategies Division, U.S. Environmental Protection Agency (2822), 1200 Pennsylvania Ave., NW., Washington, D.C. 20460. Include the OMB control number in any correspondence. Do not send the completed forms to this address.

AS-BUILT COREHOLE 486MF

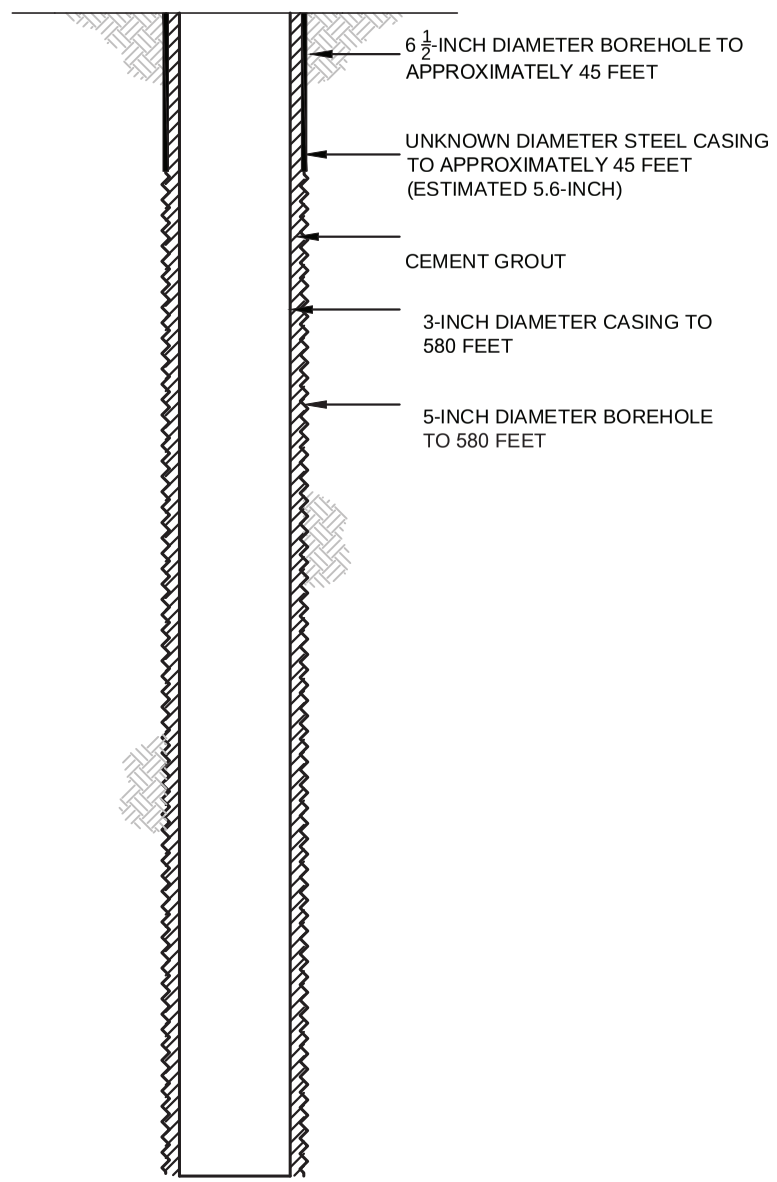

PROPOSED PLUGGING AND ABANDONMENT COREHOLE 486MF

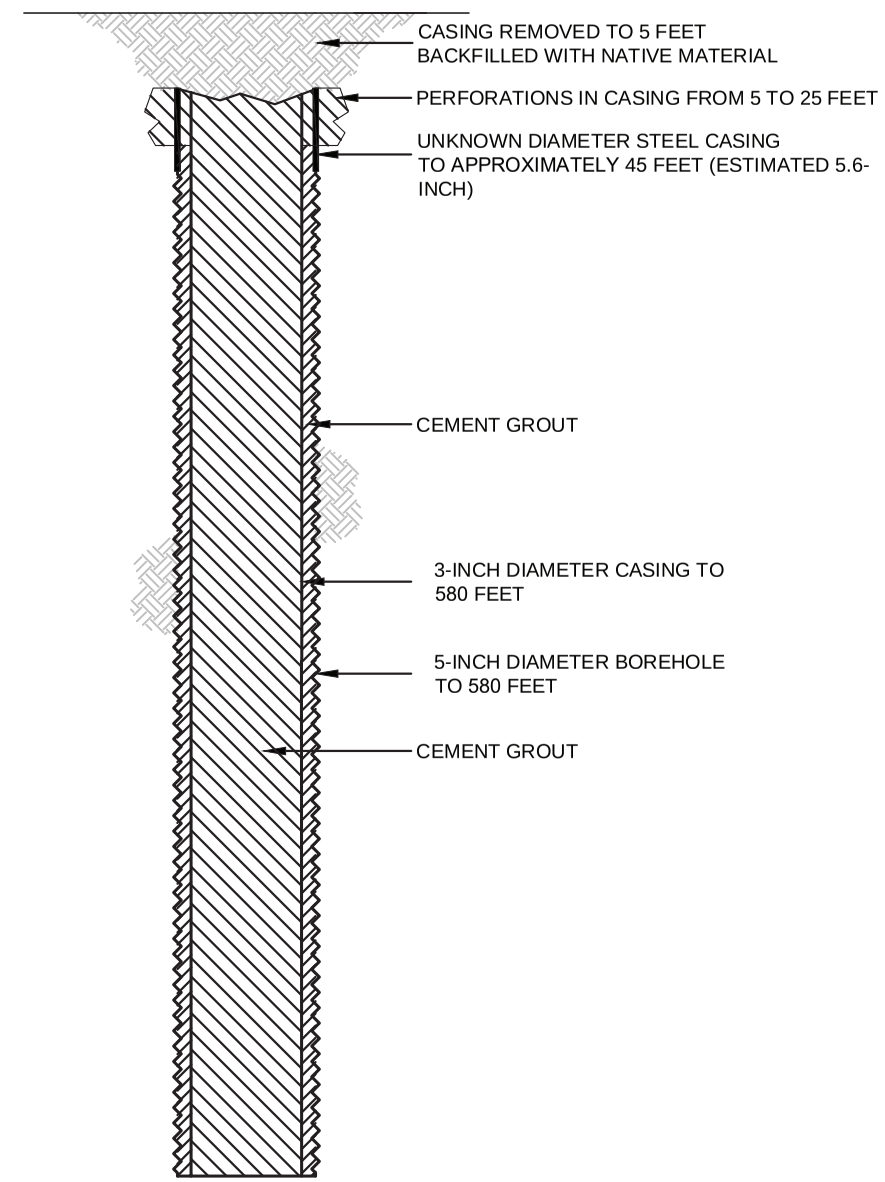

HALEY ALDRICH

FLORENCE COPPER, INC.
FLORENCE, ARIZONA

COREHOLE 486MF DIAGRAM

FLORENCE COPPER INC.

NOT TO SCALE
SEPTEMBER 2019

FIGURE 1

MOBINI, GITA Printed: 4/21/2017 12:13 PM Layout: ABANDON (2)
G:\PROJECTS\CURIS RESOURCES\38706-CURIS FEASIBILITY\DRAWINGS\EPA\WELL\ABANDON\448S_ABANDON.DWG

OMB No. 2040-0042 Approval Expires 4/30/2022

United States Environmental Protection Agency

EPA

WELL REWORK RECORD, PLUGGING AND ABANDONMENT PLAN, OR PLUGGING AND ABANDONMENT AFFIDAVIT

Name and Address, Phone Number and/or Email of Permittee

Florence Copper Project
1575 W Hunt Hwy,
Florence, AZ 85132

Permit or EPA ID Number	API Number	Full Well Name
R9UIC-AZ3-FY11-1		487MF

State	County
Arizona	Pinal

Locate well in two directions from nearest lines of quarter section and drilling unit

Latitude 33.04560566

Surface Location

NW **1/4 of** NW **1/4 of Section** 33 **Township** 4S **Range** 9E

Longitude -111.4350747

_____ **ft. from (N/S)** _____ **Line of quarter section**

_____ **ft. from (E/W)** _____ **Line of quarter section.**

Well Class	Timing of Action (pick one)	Type of Action (pick one)
☐ Class I ☐ Class II ☑ Class III ☐ Class V	☑ Notice Prior to Work Date Expected to Commence March 2021 ☐ Report After Work Date Work Ended	☐ Well Rework ☑ Plugging and Abandonment ☐ Conversion to a Non-Injection Well

Provide a narrative description of the work planned to be performed, or that was performed. Use additional pages as necessary. See instructions.

A workover rig capable of performing the required abandonment operations at the required depths will be moved in and set up over the core hole. The core hole will be inspected to determine the depth to which the hole remains open and if any obstructions are present in the core hole; the presence and condition of any existing collar will also be documented. If necessary, the core hole will be cleaned out to a depth of at least 100 feet below the bedrock-LBFU contact to enable placement of cement seals.

If collar is present, an attempt will be made to remove it. If removal of the collar is not feasible, it will be left in the hole and perforated as needed to allow an annular seal to be placed to a depth of at least 25 feet bgs. In areas of agricultural use, the surface casing will be cut at least 5 feet bgs and removed.

If the collar cannot be removed, it will be perforated from at least 20 feet below the bedrock-LBFU contact to at least 20 feet above the contact; from at least 20 feet below the base of the MFGU to at least 20 feet above the top of the MFGU; and from at least 25 feet bgs to 5 feet bgs.

A tremie pipe will be used to place Type V cement in the open core hole from the bottom of the core hole to the top of the core hole. Cement retainers, as described above, will be used to force cement grout into the annulus and behind perforated intervals, as necessary.

If the hole has been obstructed, as much cement as possible will be placed from 100 feet below the LBFU-bedrock contact to the top of the core hole.

The volume of Type V cement will be recorded and will not be less than the estimated volume of material required to fill each interval. All cement grout will consist of Type V cement, or equivalent approved in accordance with the UIC Permit.

Certification

I certify under the penalty of law that I have personally examined and am familiar with the information submitted in this document and all attachments and that, based on my inquiry of those individuals immediately responsible for obtaining the information, I believe that the information is true, accurate, and complete. I am aware that there are significant penalties for submitting false information, including the possibliity of fine and imprisonment. (Ref. 40 CFR § 144.32)

Name and Official Title *(Please type or print)*	Signature	Date Signed
Dan Johnson, VP - General Manager		10/3/2019

INSTRUCTIONS FOR FORM 7520-19

This form replaces forms 7520-12 and 7520-14. Use this form only when work is planned or has occurred that affects the well's construction or operation as an injection well, including work on the casing, tubing or packer (or for shallow Class V wells, the subsurface fluid emplacement network). Use one form per injection well. While reports or other information developed by contractors or service companies may be attached, this form must be signed by a responsible entity as described at 40 CFR 144.32. Note: operators closing Class V wells should use Form 7520-17.

NAME, ADDRESS, PHONE AND/OR EMAIL OF PERMITTEE: Enter the name and street address, city/town, state, and ZIP code of the permittee. Also provide an email address (if available) and/or a phone number.

PERMIT OR EPA ID NUMBER: Enter the well identification number or permit number assigned to the well by the EPA or the permitting authority.

API NUMBER: Enter the number assigned by the local jurisdiction (usually a State Oil and Gas Agency) using the American Petroleum Institute standard numbering system.

FULL WELL NAME: Enter the full name of the well or project.

Enter the **STATE** and **COUNTY** where the well is located. For States that do not have counties, use the name of that State's equivalent jurisdiction at a more local level.

WELL LOCATION: Fill in the complete township, range, and section to the nearest quarter-quarter section. A township is north or south of the baseline, and a range is east or west of the principal meridian (e.g., T12N, R34W). Also include the distance, in feet, from the nearest north or south line and nearest east or west line of the quarter-section. Also, enter the **latitude** and **longitude** of the well in decimal degrees, to five or six places if possible; be sure to include a negative sign for the longitude of a well in the Western Hemisphere and a negative sign for the latitude of a well in the Southern Hemisphere.

Enter the **WELL CLASS,** i.e., the class of injection well as defined in 40 CFR 144.6.

TIMING OF THE ACTION: Check ***Notice prior to work*** if the activity has not yet occurred (i.e., is planned). Check ***Report after work*** if the activity described has already occurred. As appropriate, include the date the activity is expected to start or the date the activity was completed. (Note this may not be available, e.g., for a plugging plan submitted with a permit application.)

TYPE OF ACTION: Check the appropriate box to describe the kind of activity being reported. Check ***Well Rework*** for work that was/will be performed on the well after it has already been in operation as an injection well. Check ***Plugging and Abandonment*** to report on plans for or descriptions of final closure/plugging after use as an injection well. Check ***Conversion to a Non-Injection Well*** if the well is to be converted to something other than an injection well.

Provide a **NARRATIVE DESCRIPTION** of the work planned to be performed, or that was performed. The narrative should include a description of the main procedures planned or that occurred during the work activity. A service company report, daily report, or similar document may be attached if it includes all the requested information and is clear and legible.

For well reworks, include the following information: The reason for the well rework; depths of activity; type of activity; changes to injection well configuration, well casing, or cement behind casing; any plug added to the well and its depth; any newly drilled interval and its depth; method(s) to demonstrate that the well has mechanical integrity (as applicable); and any deviations from the approved rework plan (as applicable).

For a well plugging plan, include the following information: Reason for the well plugging; number of plugs placed, and their depths; materials used as plugs (e.g., cast iron bridge plug, cement, cement retainer); method to set plugs; and wait-on-cement times, if any. Also provide one or more cost estimates from an independent firm in the business of plugging and abandoning wells to plug the well as described in the plan.

For well plugging affidavit, include the following information: Reason for the well plugging; number of plugs placed, and their depths; materials used as plugs (e.g., cast iron bridge plug, cement, cement retainer); method to set plugs; wait-on-cement times, if any; and any deviations from the approved plugging plan (if applicable).

For conversion to a non-injection well, include the following information: Depths of activity; type of activity; changes to injection well configuration, well casing, or cement behind casing; any plug added to the well and its depth; any newly drilled interval and its depth; depths of new perforations; and method(s) to demonstrate that the well has mechanical integrity (as applicable).

For all of the above activities, include a well sketch depicting the work, results of well tests/logging performed, service company tickets, and any other available information demonstrating how the work was/is to be performed. Also, specify whether depths are below ground surface, relative to Kelly bushing, etc.

CERTIFICATION: This form must be signed and dated by either: a responsible corporate officer for a corporation, by a general partner for a partnership, by the proprietor of a sole proprietorship, or by a principal executive or ranking elected official for a public agency.

PAPERWORK REDUCTION ACT NOTICE: The public reporting and recordkeeping burden for this collection of information is estimated to average between 6.0 and 7.9 hours per response, depending on the injection well class. Burden means the total time, effort, or financial resource expended by persons to generate, maintain, retain, or disclose or provide information to or for a Federal Agency. This includes the time needed to review instructions; develop, acquire, install, and utilize technology and systems for the purposes of collecting, validating, and verifying information, processing and maintaining information, and disclosing and providing information; adjust the existing ways to comply with any previously applicable instructions and requirements; train personnel to be able to respond to the collection of information; search data sources; complete and review the collection of information; and, transmit or otherwise disclose the information. An agency may not conduct or sponsor, and a person is not required to respond to, a collection of information unless it displays a currently valid OMB control number. Send comments on the Agency's need for this information, the accuracy of the provided burden estimates, and any suggested methods for minimizing respondent burden, including the use of automated collection techniques to Director, Collection Strategies Division, U.S. Environmental Protection Agency (2822), 1200 Pennsylvania Ave., NW., Washington, D.C. 20460. Include the OMB control number in any correspondence. Do not send the completed forms to this address.

AS-BUILT COREHOLE 487MF

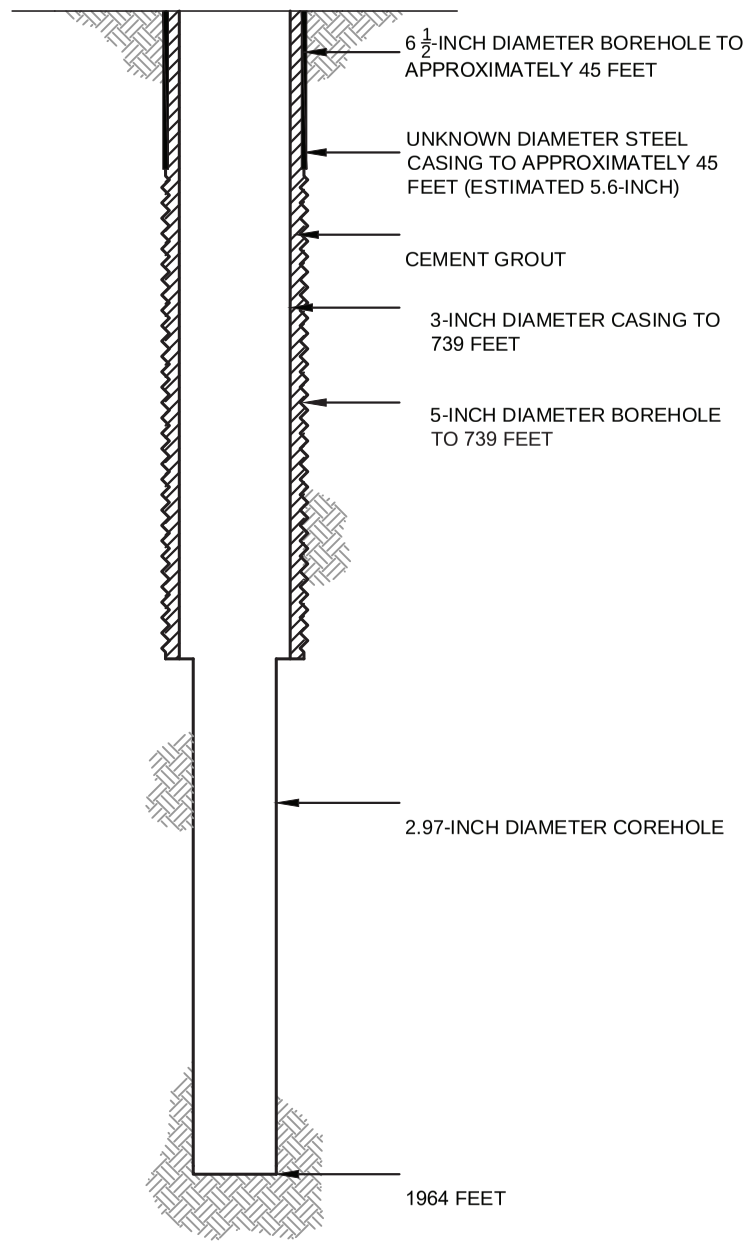

PROPOSED PLUGGING AND ABANDONMENT COREHOLE 487MF

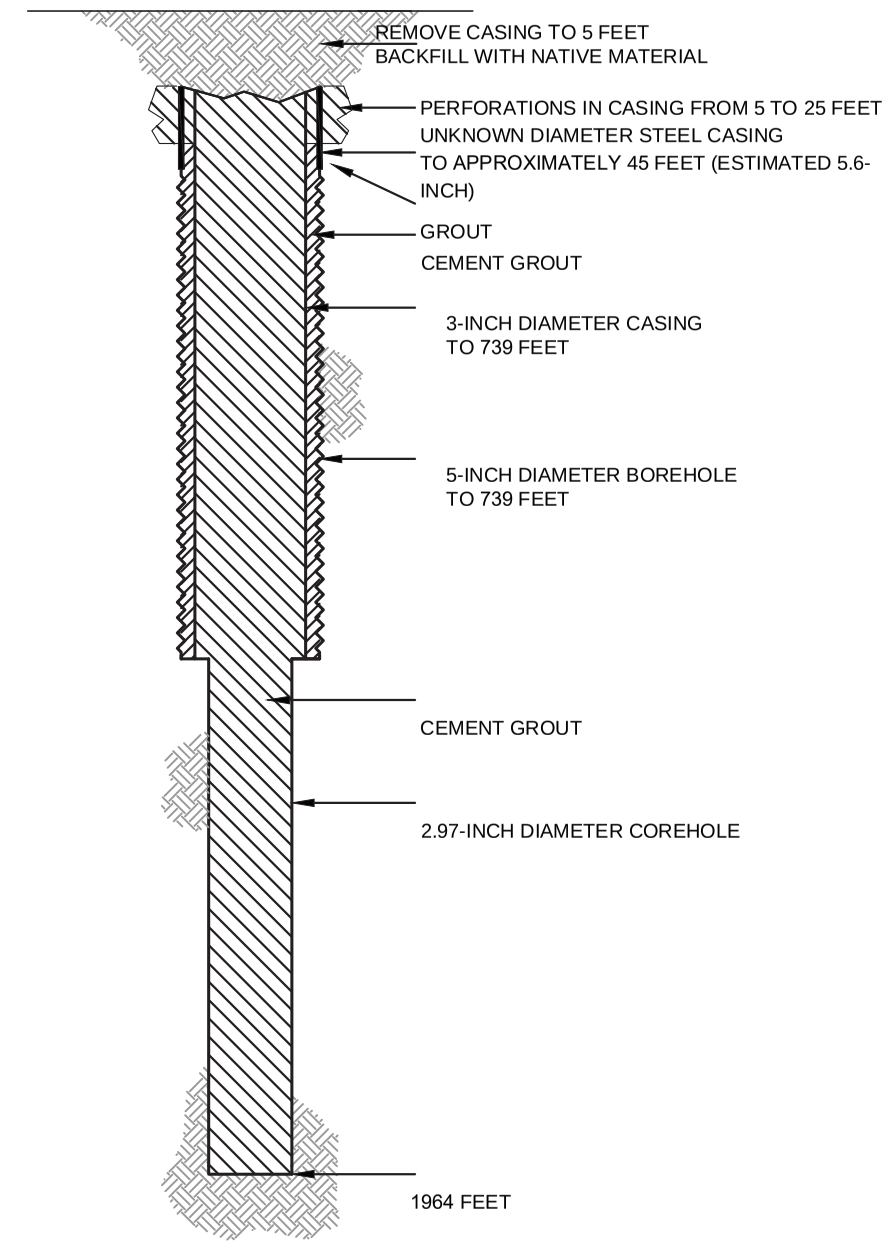

HALEY ALDRICH

FLORENCE COPPER, INC.
FLORENCE, ARIZONA

COREHOLE 487MF DIAGRAM

FLORENCE COPPER INC.

NOT TO SCALE
SEPTEMBER 2019

FIGURE 1

MOBINI, GITA Printed: 4/21/2017 12:00 PM Layout: ABANDON (2)
\PROJECTS\CURIS RESOURCES38706-CURIS FEASIBILITY\DRAWINGS\EPA\WELL ABANDON\415S_ABANDON.DWG

OMB No. 2040-0042 Approval Expires 4/30/2022

United States Environmental Protection Agency

WELL REWORK RECORD, PLUGGING AND ABANDONMENT PLAN, OR PLUGGING AND ABANDONMENT AFFIDAVIT

Name and Address, Phone Number and/or Email of Permittee

Florence Copper Project
1575 W Hunt Hwy,
Florence, AZ 85132

Permit or EPA ID Number	API Number	Full Well Name
R9UIC-AZ3-FY11-1		488MF

State	County
Arizona	Pinal

Locate well in two directions from nearest lines of quarter section and drilling unit

Surface Location

NW 1/4 of NW 1/4 of Section 33 Township 4S Range 9E

Latitude 33.04560881

Longitude -111.4358905

_____ ft. from (N/S) _____ Line of quarter section

_____ ft. from (E/W) _____ Line of quarter section.

Well Class	Timing of Action (pick one)	Type of Action (pick one)
☐ Class I ☐ Class II ☑ Class III ☐ Class V	☑ Notice Prior to Work Date Expected to Commence March 2021 ☐ Report After Work Date Work Ended	☐ Well Rework ☑ Plugging and Abandonment ☐ Conversion to a Non-Injection Well

Provide a narrative description of the work planned to be performed, or that was performed. Use additional pages as necessary. See instructions.

A workover rig capable of performing the required abandonment operations at the required depths will be moved in and set up over the core hole. The core hole will be inspected to determine the depth to which the hole remains open and if any obstructions are present in the core hole; the presence and condition of any existing collar will also be documented. If necessary, the core hole will be cleaned out to a depth of at least 100 feet below the bedrock-LBFU contact to enable placement of cement seals.

If collar is present, an attempt will be made to remove it. If removal of the collar is not feasible, it will be left in the hole and perforated as needed to allow an annular seal to be placed to a depth of at least 25 feet bgs. In areas of agricultural use, the surface casing will be cut at least 5 feet bgs and removed.

If the collar cannot be removed, it will be perforated from at least 20 feet below the bedrock-LBFU contact to at least 20 feet above the contact; from at least 20 feet below the base of the MFGU to at least 20 feet above the top of the MFGU; and from at least 25 feet bgs to 5 feet bgs.

A tremie pipe will be used to place Type V cement in the open core hole from the bottom of the core hole to the top of the core hole. Cement retainers, as described above, will be used to force cement grout into the annulus and behind perforated intervals, as necessary.

If the hole has been obstructed, as much cement as possible will be placed from 100 feet below the LBFU-bedrock contact to the top of the core hole.

The volume of Type V cement will be recorded and will not be less than the estimated volume of material required to fill each interval. All cement grout will consist of Type V cement, or equivalent approved in accordance with the UIC Permit.

Certification

I certify under the penalty of law that I have personally examined and am familiar with the information submitted in this document and all attachments and that, based on my inquiry of those individuals immediately responsible for obtaining the information, I believe that the information is true, accurate, and complete. I am aware that there are significant penalties for submitting false information, including the possibliity of fine and imprisonment. (Ref. 40 CFR § 144.32)

Name and Official Title *(Please type or print)*	Signature	Date Signed
Dan Johnson, VP - General Manager		10/3/2019

INSTRUCTIONS FOR FORM 7520-19

This form replaces forms 7520-12 and 7520-14. Use this form only when work is planned or has occurred that affects the well's construction or operation as an injection well, including work on the casing, tubing or packer (or for shallow Class V wells, the subsurface fluid emplacement network). Use one form per injection well. While reports or other information developed by contractors or service companies may be attached, this form must be signed by a responsible entity as described at 40 CFR 144.32. Note: operators closing Class V wells should use Form 7520-17.

NAME, ADDRESS, PHONE AND/OR EMAIL OF PERMITTEE: Enter the name and street address, city/town, state, and ZIP code of the permittee. Also provide an email address (if available) and/or a phone number.

PERMIT OR EPA ID NUMBER: Enter the well identification number or permit number assigned to the well by the EPA or the permitting authority.

API NUMBER: Enter the number assigned by the local jurisdiction (usually a State Oil and Gas Agency) using the American Petroleum Institute standard numbering system.

FULL WELL NAME: Enter the full name of the well or project.

Enter the **STATE** and **COUNTY** where the well is located. For States that do not have counties, use the name of that State's equivalent jurisdiction at a more local level.

WELL LOCATION: Fill in the complete township, range, and section to the nearest quarter-quarter section. A township is north or south of the baseline, and a range is east or west of the principal meridian (e.g., T12N, R34W). Also include the distance, in feet, from the nearest north or south line and nearest east or west line of the quarter-section. Also, enter the **latitude** and **longitude** of the well in decimal degrees, to five or six places if possible; be sure to include a negative sign for the longitude of a well in the Western Hemisphere and a negative sign for the latitude of a well in the Southern Hemisphere.

Enter the **WELL CLASS,** i.e., the class of injection well as defined in 40 CFR 144.6.

TIMING OF THE ACTION: Check ***Notice prior to work*** if the activity has not yet occurred (i.e., is planned). Check ***Report after work*** if the activity described has already occurred. As appropriate, include the date the activity is expected to start or the date the activity was completed. (Note this may not be available, e.g., for a plugging plan submitted with a permit application.)

TYPE OF ACTION: Check the appropriate box to describe the kind of activity being reported. Check ***Well Rework*** for work that was/will be performed on the well after it has already been in operation as an injection well. Check ***Plugging and Abandonment*** to report on plans for or descriptions of final closure/plugging after use as an injection well. Check ***Conversion to a Non-Injection Well*** if the well is to be converted to something other than an injection well.

Provide a **NARRATIVE DESCRIPTION** of the work planned to be performed, or that was performed. The narrative should include a description of the main procedures planned or that occurred during the work activity. A service company report, daily report, or similar document may be attached if it includes all the requested information and is clear and legible.

For well reworks, include the following information: The reason for the well rework; depths of activity; type of activity; changes to injection well configuration, well casing, or cement behind casing; any plug added to the well and its depth; any newly drilled interval and its depth; method(s) to demonstrate that the well has mechanical integrity (as applicable); and any deviations from the approved rework plan (as applicable).

For a well plugging plan, include the following information: Reason for the well plugging; number of plugs placed, and their depths; materials used as plugs (e.g., cast iron bridge plug, cement, cement retainer); method to set plugs; and wait-on-cement times, if any. Also provide one or more cost estimates from an independent firm in the business of plugging and abandoning wells to plug the well as described in the plan.

For well plugging affidavit, include the following information: Reason for the well plugging; number of plugs placed, and their depths; materials used as plugs (e.g., cast iron bridge plug, cement, cement retainer); method to set plugs; wait-on-cement times, if any; and any deviations from the approved plugging plan (if applicable).

For conversion to a non-injection well, include the following information: Depths of activity; type of activity; changes to injection well configuration, well casing, or cement behind casing; any plug added to the well and its depth; any newly drilled interval and its depth; depths of new perforations; and method(s) to demonstrate that the well has mechanical integrity (as applicable).

For all of the above activities, include a well sketch depicting the work, results of well tests/logging performed, service company tickets, and any other available information demonstrating how the work was/is to be performed. Also, specify whether depths are below ground surface, relative to Kelly bushing, etc.

CERTIFICATION: This form must be signed and dated by either: a responsible corporate officer for a corporation, by a general partner for a partnership, by the proprietor of a sole proprietorship, or by a principal executive or ranking elected official for a public agency.

PAPERWORK REDUCTION ACT NOTICE: The public reporting and recordkeeping burden for this collection of information is estimated to average between 6.0 and 7.9 hours per response, depending on the injection well class. Burden means the total time, effort, or financial resource expended by persons to generate, maintain, retain, or disclose or provide information to or for a Federal Agency. This includes the time needed to review instructions; develop, acquire, install, and utilize technology and systems for the purposes of collecting, validating, and verifying information, processing and maintaining information, and disclosing and providing information; adjust the existing ways to comply with any previously applicable instructions and requirements; train personnel to be able to respond to the collection of information; search data sources; complete and review the collection of information; and, transmit or otherwise disclose the information. An agency may not conduct or sponsor, and a person is not required to respond to, a collection of information unless it displays a currently valid OMB control number. Send comments on the Agency's need for this information, the accuracy of the provided burden estimates, and any suggested methods for minimizing respondent burden, including the use of automated collection techniques to Director, Collection Strategies Division, U.S. Environmental Protection Agency (2822), 1200 Pennsylvania Ave., NW., Washington, D.C. 20460. Include the OMB control number in any correspondence. Do not send the completed forms to this address.

AS-BUILT COREHOLE 488MF

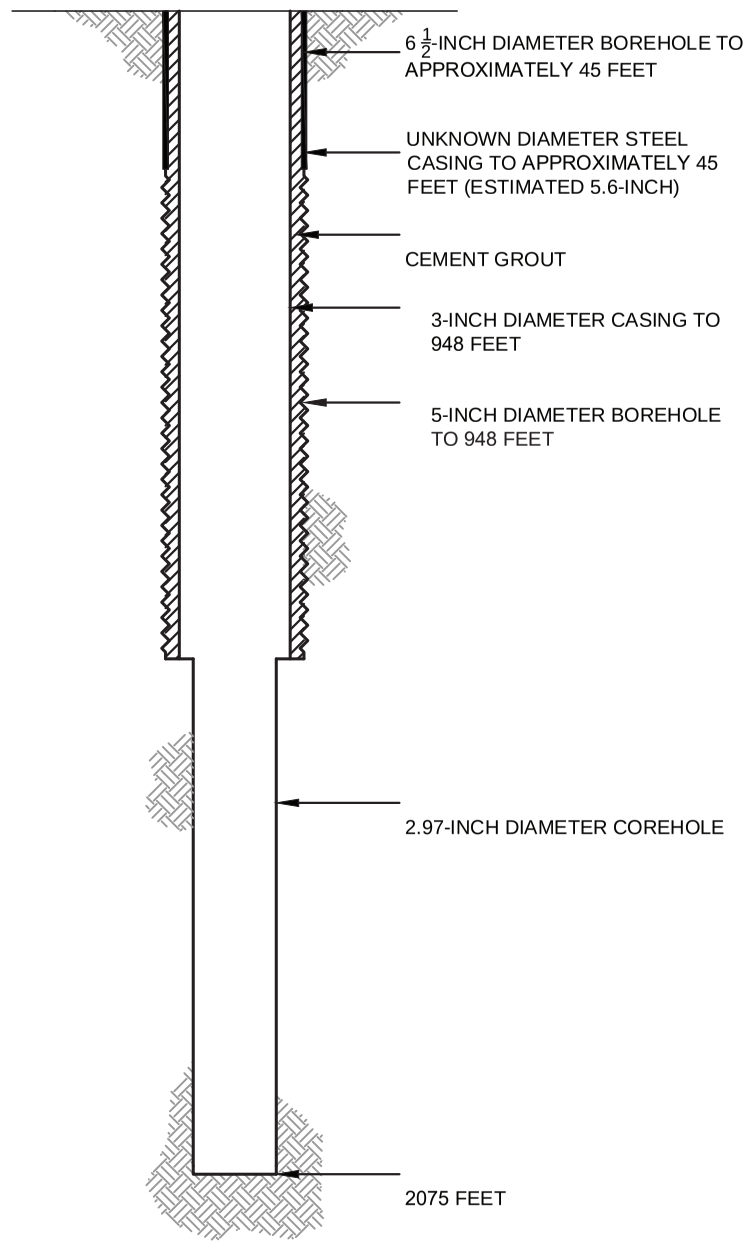

PROPOSED PLUGGING AND ABANDONMENT COREHOLE 488MF

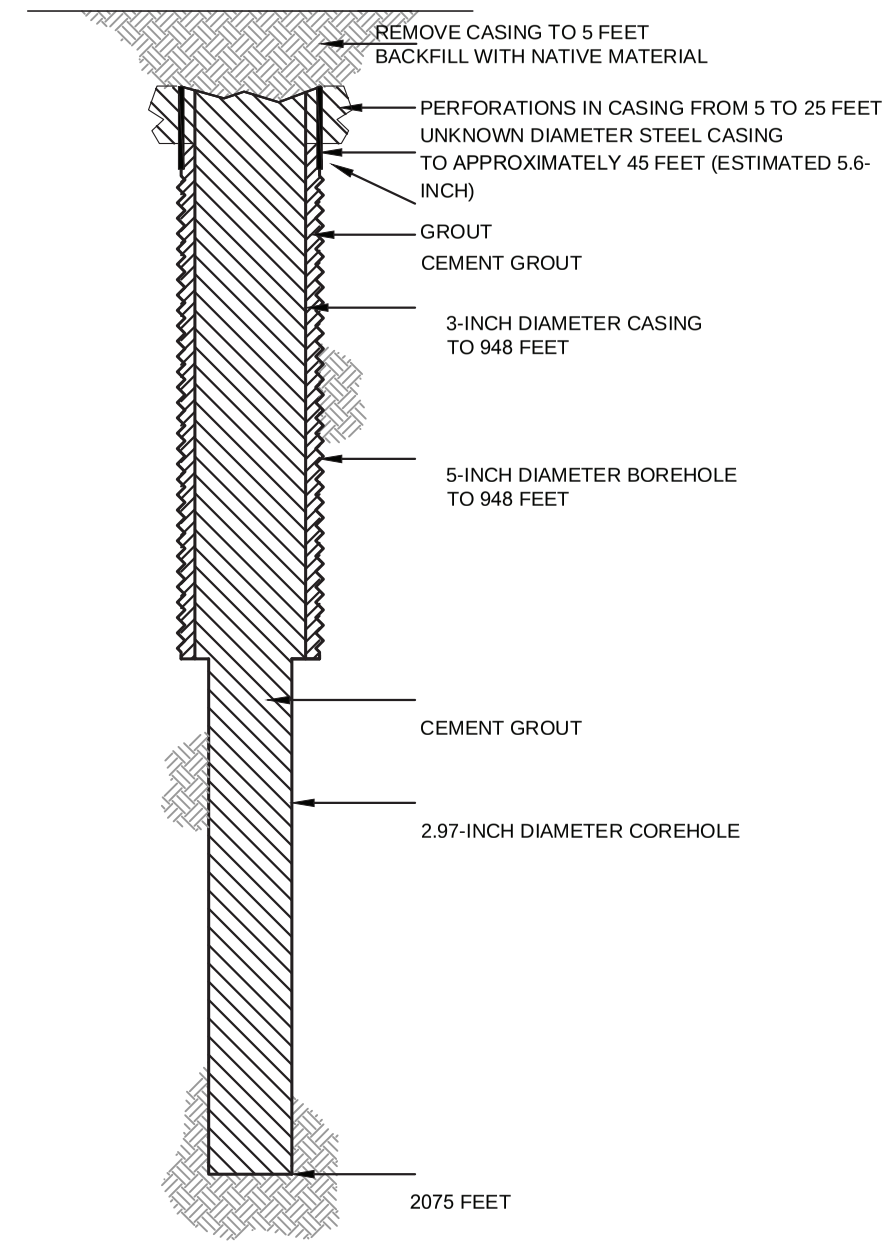

HALEY ALDRICH

FLORENCE COPPER, INC.
FLORENCE, ARIZONA

COREHOLE 488MF DIAGRAM

FLORENCE COPPER INC.

NOT TO SCALE
SEPTEMBER 2019

FIGURE 1

MOBINI, GITA Printed: 4/21/2017 12:00 PM Layout: ABANDON (2)
\PROJECTS\CURIS RESOURCES38706-CURIS FEASIBILITY\DRAWINGS\EPA\WELL ABANDON\415S_ABANDON.DWG

OMB No. 2040-0042 Approval Expires 4/30/2022

United States Environmental Protection Agency

WELL REWORK RECORD, PLUGGING AND ABANDONMENT PLAN, OR PLUGGING AND ABANDONMENT AFFIDAVIT

Name and Address, Phone Number and/or Email of Permittee

Florence Copper Project
1575 W Hunt Hwy,
Florence, AZ 85132

Permit or EPA ID Number	API Number	Full Well Name
R9UIC-AZ3-FY11-1		489MF

State	County
Arizona	Pinal

Locate well in two directions from nearest lines of quarter section and drilling unit

Latitude 33.04501532

Surface Location

NW **1/4 of** NW **1/4 of Section** 33 **Township** 4S **Range** 9E

Longitude -111.4363017

_____ **ft. from (N/S)** _____ **Line of quarter section**

_____ **ft. from (E/W)** _____ **Line of quarter section.**

Well Class	Timing of Action (pick one)	Type of Action (pick one)
☐ Class I ☐ Class II ☑ Class III ☐ Class V	☑ Notice Prior to Work Date Expected to Commence March 2021 ☐ Report After Work Date Work Ended	☐ Well Rework ☑ Plugging and Abandonment ☐ Conversion to a Non-Injection Well

Provide a narrative description of the work planned to be performed, or that was performed. Use additional pages as necessary. See instructions.

A workover rig capable of performing the required abandonment operations at the required depths will be moved in and set up over the core hole. The core hole will be inspected to determine the depth to which the hole remains open and if any obstructions are present in the core hole; the presence and condition of any existing collar will also be documented. If necessary, the core hole will be cleaned out to a depth of at least 100 feet below the bedrock-LBFU contact to enable placement of cement seals.

If collar is present, an attempt will be made to remove it. If removal of the collar is not feasible, it will be left in the hole and perforated as needed to allow an annular seal to be placed to a depth of at least 25 feet bgs. In areas of agricultural use, the surface casing will be cut at least 5 feet bgs and removed.

If the collar cannot be removed, it will be perforated from at least 20 feet below the bedrock-LBFU contact to at least 20 feet above the contact; from at least 20 feet below the base of the MFGU to at least 20 feet above the top of the MFGU; and from at least 25 feet bgs to 5 feet bgs.

A tremie pipe will be used to place Type V cement in the open core hole from the bottom of the core hole to the top of the core hole. Cement retainers, as described above, will be used to force cement grout into the annulus and behind perforated intervals, as necessary.

If the hole has been obstructed, as much cement as possible will be placed from 100 feet below the LBFU-bedrock contact to the top of the core hole.

The volume of Type V cement will be recorded and will not be less than the estimated volume of material required to fill each interval. All cement grout will consist of Type V cement, or equivalent approved in accordance with the UIC Permit.

Certification

I certify under the penalty of law that I have personally examined and am familiar with the information submitted in this document and all attachments and that, based on my inquiry of those individuals immediately responsible for obtaining the information, I believe that the information is true, accurate, and complete. I am aware that there are significant penalties for submitting false information, including the possibliity of fine and imprisonment. (Ref. 40 CFR § 144.32)

Name and Official Title *(Please type or print)*	Signature	Date Signed
Dan Johnson, VP - General Manager		10/3/2019

INSTRUCTIONS FOR FORM 7520-19

This form replaces forms 7520-12 and 7520-14. Use this form only when work is planned or has occurred that affects the well's construction or operation as an injection well, including work on the casing, tubing or packer (or for shallow Class V wells, the subsurface fluid emplacement network). Use one form per injection well. While reports or other information developed by contractors or service companies may be attached, this form must be signed by a responsible entity as described at 40 CFR 144.32. Note: operators closing Class V wells should use Form 7520-17.

NAME, ADDRESS, PHONE AND/OR EMAIL OF PERMITTEE: Enter the name and street address, city/town, state, and ZIP code of the permittee. Also provide an email address (if available) and/or a phone number.

PERMIT OR EPA ID NUMBER: Enter the well identification number or permit number assigned to the well by the EPA or the permitting authority.

API NUMBER: Enter the number assigned by the local jurisdiction (usually a State Oil and Gas Agency) using the American Petroleum Institute standard numbering system.

FULL WELL NAME: Enter the full name of the well or project.

Enter the **STATE** and **COUNTY** where the well is located. For States that do not have counties, use the name of that State's equivalent jurisdiction at a more local level.

WELL LOCATION: Fill in the complete township, range, and section to the nearest quarter-quarter section. A township is north or south of the baseline, and a range is east or west of the principal meridian (e.g., T12N, R34W). Also include the distance, in feet, from the nearest north or south line and nearest east or west line of the quarter-section. Also, enter the **latitude** and **longitude** of the well in decimal degrees, to five or six places if possible; be sure to include a negative sign for the longitude of a well in the Western Hemisphere and a negative sign for the latitude of a well in the Southern Hemisphere.

Enter the **WELL CLASS,** i.e., the class of injection well as defined in 40 CFR 144.6.

TIMING OF THE ACTION: Check ***Notice prior to work*** if the activity has not yet occurred (i.e., is planned). Check ***Report after work*** if the activity described has already occurred. As appropriate, include the date the activity is expected to start or the date the activity was completed. (Note this may not be available, e.g., for a plugging plan submitted with a permit application.)

TYPE OF ACTION: Check the appropriate box to describe the kind of activity being reported. Check ***Well Rework*** for work that was/will be performed on the well after it has already been in operation as an injection well. Check ***Plugging and Abandonment*** to report on plans for or descriptions of final closure/plugging after use as an injection well. Check ***Conversion to a Non-Injection Well*** if the well is to be converted to something other than an injection well.

Provide a **NARRATIVE DESCRIPTION** of the work planned to be performed, or that was performed. The narrative should include a description of the main procedures planned or that occurred during the work activity. A service company report, daily report, or similar document may be attached if it includes all the requested information and is clear and legible.

For well reworks, include the following information: The reason for the well rework; depths of activity; type of activity; changes to injection well configuration, well casing, or cement behind casing; any plug added to the well and its depth; any newly drilled interval and its depth; method(s) to demonstrate that the well has mechanical integrity (as applicable); and any deviations from the approved rework plan (as applicable).

For a well plugging plan, include the following information: Reason for the well plugging; number of plugs placed, and their depths; materials used as plugs (e.g., cast iron bridge plug, cement, cement retainer); method to set plugs; and wait-on-cement times, if any. Also provide one or more cost estimates from an independent firm in the business of plugging and abandoning wells to plug the well as described in the plan.

For well plugging affidavit, include the following information: Reason for the well plugging; number of plugs placed, and their depths; materials used as plugs (e.g., cast iron bridge plug, cement, cement retainer); method to set plugs; wait-on-cement times, if any; and any deviations from the approved plugging plan (if applicable).

For conversion to a non-injection well, include the following information: Depths of activity; type of activity; changes to injection well configuration, well casing, or cement behind casing; any plug added to the well and its depth; any newly drilled interval and its depth; depths of new perforations; and method(s) to demonstrate that the well has mechanical integrity (as applicable).

For all of the above activities, include a well sketch depicting the work, results of well tests/logging performed, service company tickets, and any other available information demonstrating how the work was/is to be performed. Also, specify whether depths are below ground surface, relative to Kelly bushing, etc.

CERTIFICATION: This form must be signed and dated by either: a responsible corporate officer for a corporation, by a general partner for a partnership, by the proprietor of a sole proprietorship, or by a principal executive or ranking elected official for a public agency.

PAPERWORK REDUCTION ACT NOTICE: The public reporting and recordkeeping burden for this collection of information is estimated to average between 6.0 and 7.9 hours per response, depending on the injection well class. Burden means the total time, effort, or financial resource expended by persons to generate, maintain, retain, or disclose or provide information to or for a Federal Agency. This includes the time needed to review instructions; develop, acquire, install, and utilize technology and systems for the purposes of collecting, validating, and verifying information, processing and maintaining information, and disclosing and providing information; adjust the existing ways to comply with any previously applicable instructions and requirements; train personnel to be able to respond to the collection of information; search data sources; complete and review the collection of information; and, transmit or otherwise disclose the information. An agency may not conduct or sponsor, and a person is not required to respond to, a collection of information unless it displays a currently valid OMB control number. Send comments on the Agency's need for this information, the accuracy of the provided burden estimates, and any suggested methods for minimizing respondent burden, including the use of automated collection techniques to Director, Collection Strategies Division, U.S. Environmental Protection Agency (2822), 1200 Pennsylvania Ave., NW., Washington, D.C. 20460. Include the OMB control number in any correspondence. Do not send the completed forms to this address.

AS-BUILT COREHOLE 489MF

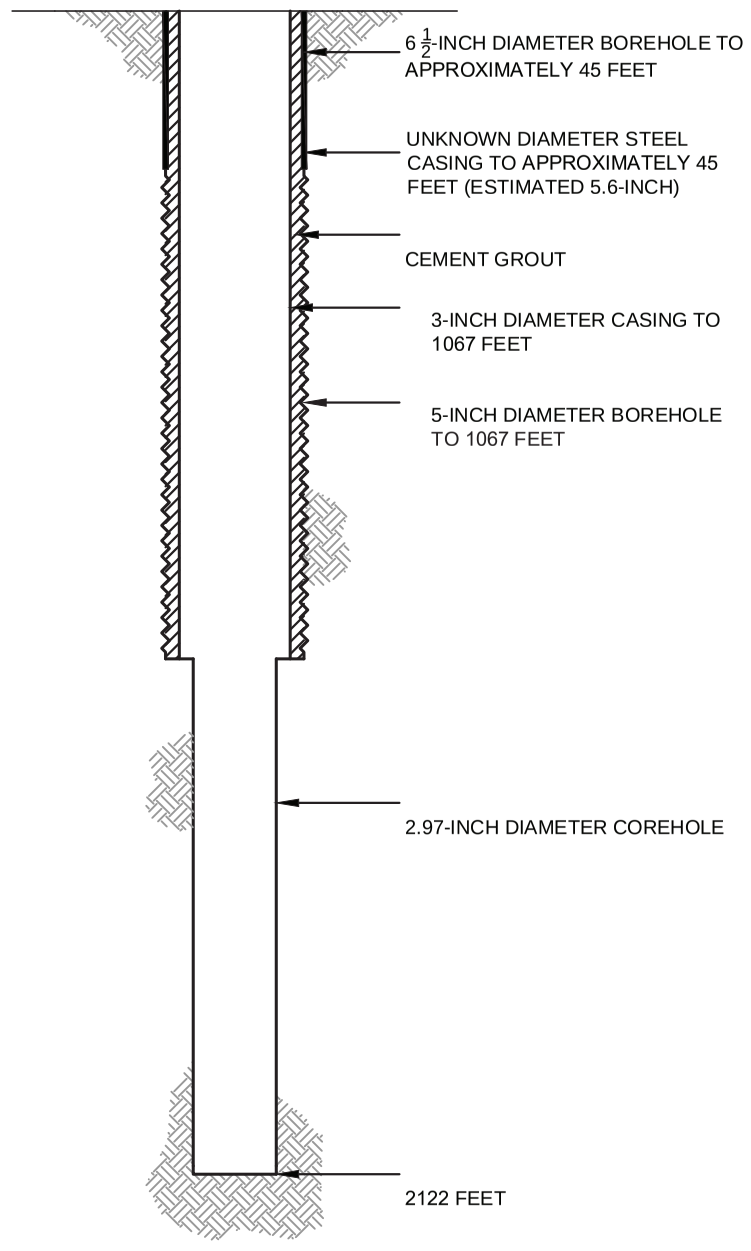

PROPOSED PLUGGING AND ABANDONMENT COREHOLE 489MF

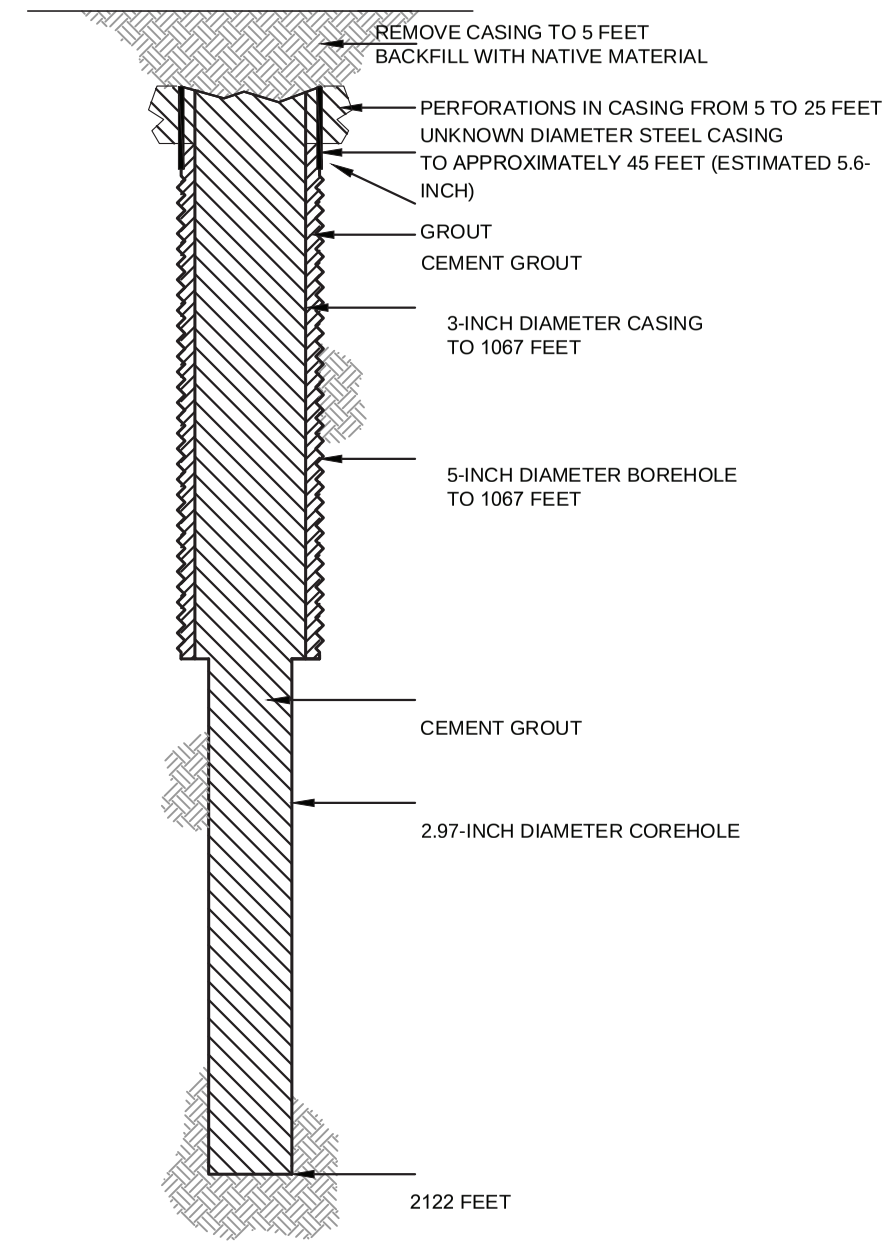

HALEY ALDRICH

FLORENCE COPPER, INC.
FLORENCE, ARIZONA

COREHOLE 489MF DIAGRAM

FLORENCE COPPER INC.

NOT TO SCALE
SEPTEMBER 2019

FIGURE 1

MOBINI, GITA Printed: 4/21/2017 12:00 PM Layout: ABANDON (2)
\PROJECTS\CURIS RESOURCES38706-CURIS FEASIBILITY\DRAWINGS\EPA\WELL ABANDON\415S_ABANDON.DWG

OMB No. 2040-0042 Approval Expires 4/30/2022

United States Environmental Protection Agency

EPA

WELL REWORK RECORD, PLUGGING AND ABANDONMENT PLAN, OR PLUGGING AND ABANDONMENT AFFIDAVIT

Name and Address, Phone Number and/or Email of Permittee

Florence Copper Project
1575 W Hunt Hwy,
Florence, AZ 85132

Permit or EPA ID Number	API Number	Full Well Name
R9UIC-AZ3-FY11-1		490MF

State	County
Arizona	Pinal

Locate well in two directions from nearest lines of quarter section and drilling unit

Surface Location

NW 1/4 of NW 1/4 of Section 33 Township 4S Range 9E

Latitude 33.04500903

Longitude -111.43467

_____ ft. from (N/S) _____ Line of quarter section

_____ ft. from (E/W) _____ Line of quarter section.

Well Class	Timing of Action (pick one)	Type of Action (pick one)
☐ Class I ☐ Class II ☑ Class III ☐ Class V	☑ Notice Prior to Work Date Expected to Commence March 2021 ☐ Report After Work Date Work Ended	☐ Well Rework ☑ Plugging and Abandonment ☐ Conversion to a Non-Injection Well

Provide a narrative description of the work planned to be performed, or that was performed. Use additional pages as necessary. See instructions.

A workover rig capable of performing the required abandonment operations at the required depths will be moved in and set up over the core hole. The core hole will be inspected to determine the depth to which the hole remains open and if any obstructions are present in the core hole; the presence and condition of any existing collar will also be documented. If necessary, the core hole will be cleaned out to a depth of at least 100 feet below the bedrock-LBFU contact to enable placement of cement seals.

If collar is present, an attempt will be made to remove it. If removal of the collar is not feasible, it will be left in the hole and perforated as needed to allow an annular seal to be placed to a depth of at least 25 feet bgs. In areas of agricultural use, the surface casing will be cut at least 5 feet bgs and removed.

If the collar cannot be removed, it will be perforated from at least 20 feet below the bedrock-LBFU contact to at least 20 feet above the contact; from at least 20 feet below the base of the MFGU to at least 20 feet above the top of the MFGU; and from at least 25 feet bgs to 5 feet bgs.

A tremie pipe will be used to place Type V cement in the open core hole from the bottom of the core hole to the top of the core hole. Cement retainers, as described above, will be used to force cement grout into the annulus and behind perforated intervals, as necessary.

If the hole has been obstructed, as much cement as possible will be placed from 100 feet below the LBFU-bedrock contact to the top of the core hole.

The volume of Type V cement will be recorded and will not be less than the estimated volume of material required to fill each interval. All cement grout will consist of Type V cement, or equivalent approved in accordance with the UIC Permit.

Certification

I certify under the penalty of law that I have personally examined and am familiar with the information submitted in this document and all attachments and that, based on my inquiry of those individuals immediately responsible for obtaining the information, I believe that the information is true, accurate, and complete. I am aware that there are significant penalties for submitting false information, including the possibliity of fine and imprisonment. (Ref. 40 CFR § 144.32)

Name and Official Title *(Please type or print)*	Signature	Date Signed
Dan Johnson, VP - General Manager		10/3/2019

INSTRUCTIONS FOR FORM 7520-19

This form replaces forms 7520-12 and 7520-14. Use this form only when work is planned or has occurred that affects the well's construction or operation as an injection well, including work on the casing, tubing or packer (or for shallow Class V wells, the subsurface fluid emplacement network). Use one form per injection well. While reports or other information developed by contractors or service companies may be attached, this form must be signed by a responsible entity as described at 40 CFR 144.32. Note: operators closing Class V wells should use Form 7520-17.

NAME, ADDRESS, PHONE AND/OR EMAIL OF PERMITTEE: Enter the name and street address, city/town, state, and ZIP code of the permittee. Also provide an email address (if available) and/or a phone number.

PERMIT OR EPA ID NUMBER: Enter the well identification number or permit number assigned to the well by the EPA or the permitting authority.

API NUMBER: Enter the number assigned by the local jurisdiction (usually a State Oil and Gas Agency) using the American Petroleum Institute standard numbering system.

FULL WELL NAME: Enter the full name of the well or project.

Enter the **STATE** and **COUNTY** where the well is located. For States that do not have counties, use the name of that State's equivalent jurisdiction at a more local level.

WELL LOCATION: Fill in the complete township, range, and section to the nearest quarter-quarter section. A township is north or south of the baseline, and a range is east or west of the principal meridian (e.g., T12N, R34W). Also include the distance, in feet, from the nearest north or south line and nearest east or west line of the quarter-section. Also, enter the **latitude** and **longitude** of the well in decimal degrees, to five or six places if possible; be sure to include a negative sign for the longitude of a well in the Western Hemisphere and a negative sign for the latitude of a well in the Southern Hemisphere.

Enter the **WELL CLASS,** i.e., the class of injection well as defined in 40 CFR 144.6.

TIMING OF THE ACTION: Check ***Notice prior to work*** if the activity has not yet occurred (i.e., is planned). Check ***Report after work*** if the activity described has already occurred. As appropriate, include the date the activity is expected to start or the date the activity was completed. (Note this may not be available, e.g., for a plugging plan submitted with a permit application.)

TYPE OF ACTION: Check the appropriate box to describe the kind of activity being reported. Check ***Well Rework*** for work that was/will be performed on the well after it has already been in operation as an injection well. Check ***Plugging and Abandonment*** to report on plans for or descriptions of final closure/plugging after use as an injection well. Check ***Conversion to a Non-Injection Well*** if the well is to be converted to something other than an injection well.

Provide a **NARRATIVE DESCRIPTION** of the work planned to be performed, or that was performed. The narrative should include a description of the main procedures planned or that occurred during the work activity. A service company report, daily report, or similar document may be attached if it includes all the requested information and is clear and legible.

For well reworks, include the following information: The reason for the well rework; depths of activity; type of activity; changes to injection well configuration, well casing, or cement behind casing; any plug added to the well and its depth; any newly drilled interval and its depth; method(s) to demonstrate that the well has mechanical integrity (as applicable); and any deviations from the approved rework plan (as applicable).

For a well plugging plan, include the following information: Reason for the well plugging; number of plugs placed, and their depths; materials used as plugs (e.g., cast iron bridge plug, cement, cement retainer); method to set plugs; and wait-on-cement times, if any. Also provide one or more cost estimates from an independent firm in the business of plugging and abandoning wells to plug the well as described in the plan.

For well plugging affidavit, include the following information: Reason for the well plugging; number of plugs placed, and their depths; materials used as plugs (e.g., cast iron bridge plug, cement, cement retainer); method to set plugs; wait-on-cement times, if any; and any deviations from the approved plugging plan (if applicable).

For conversion to a non-injection well, include the following information: Depths of activity; type of activity; changes to injection well configuration, well casing, or cement behind casing; any plug added to the well and its depth; any newly drilled interval and its depth; depths of new perforations; and method(s) to demonstrate that the well has mechanical integrity (as applicable).

For all of the above activities, include a well sketch depicting the work, results of well tests/logging performed, service company tickets, and any other available information demonstrating how the work was/is to be performed. Also, specify whether depths are below ground surface, relative to Kelly bushing, etc.

CERTIFICATION: This form must be signed and dated by either: a responsible corporate officer for a corporation, by a general partner for a partnership, by the proprietor of a sole proprietorship, or by a principal executive or ranking elected official for a public agency.

PAPERWORK REDUCTION ACT NOTICE: The public reporting and recordkeeping burden for this collection of information is estimated to average between 6.0 and 7.9 hours per response, depending on the injection well class. Burden means the total time, effort, or financial resource expended by persons to generate, maintain, retain, or disclose or provide information to or for a Federal Agency. This includes the time needed to review instructions; develop, acquire, install, and utilize technology and systems for the purposes of collecting, validating, and verifying information, processing and maintaining information, and disclosing and providing information; adjust the existing ways to comply with any previously applicable instructions and requirements; train personnel to be able to respond to the collection of information; search data sources; complete and review the collection of information; and, transmit or otherwise disclose the information. An agency may not conduct or sponsor, and a person is not required to respond to, a collection of information unless it displays a currently valid OMB control number. Send comments on the Agency's need for this information, the accuracy of the provided burden estimates, and any suggested methods for minimizing respondent burden, including the use of automated collection techniques to Director, Collection Strategies Division, U.S. Environmental Protection Agency (2822), 1200 Pennsylvania Ave., NW., Washington, D.C. 20460. Include the OMB control number in any correspondence. Do not send the completed forms to this address.

AS-BUILT COREHOLE 490MF

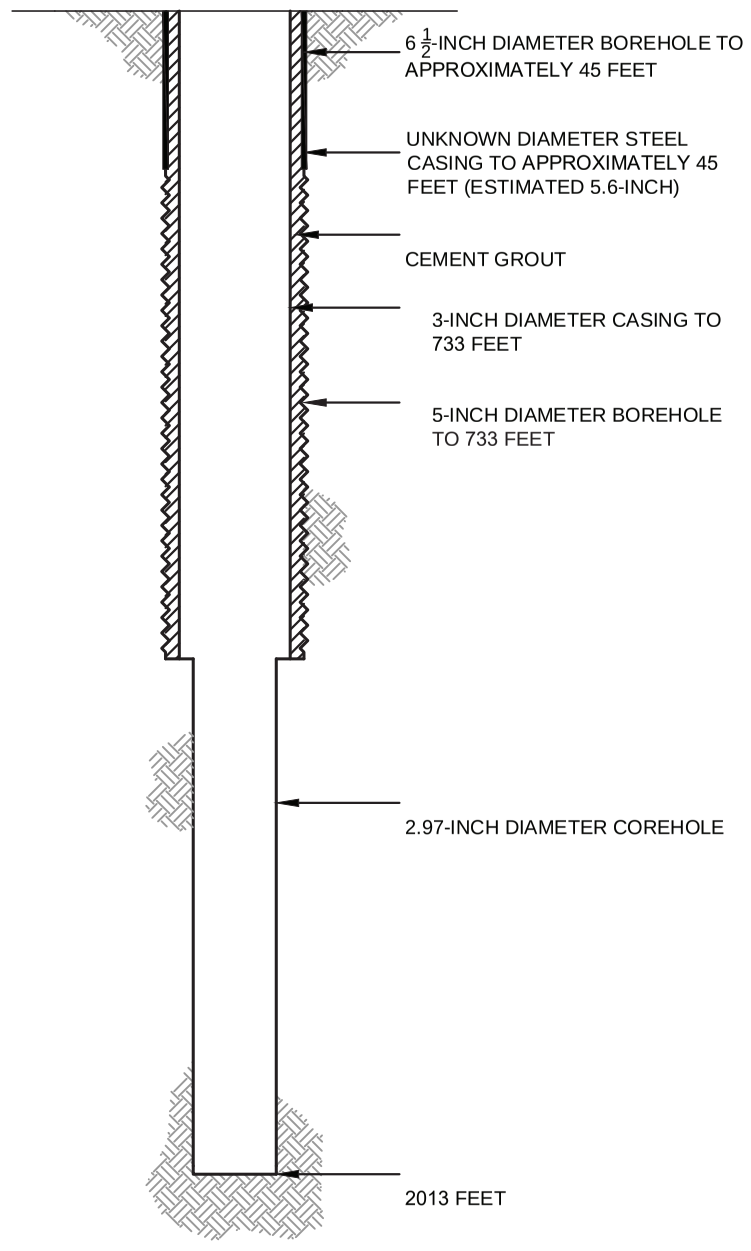

PROPOSED PLUGGING AND ABANDONMENT COREHOLE 490MF

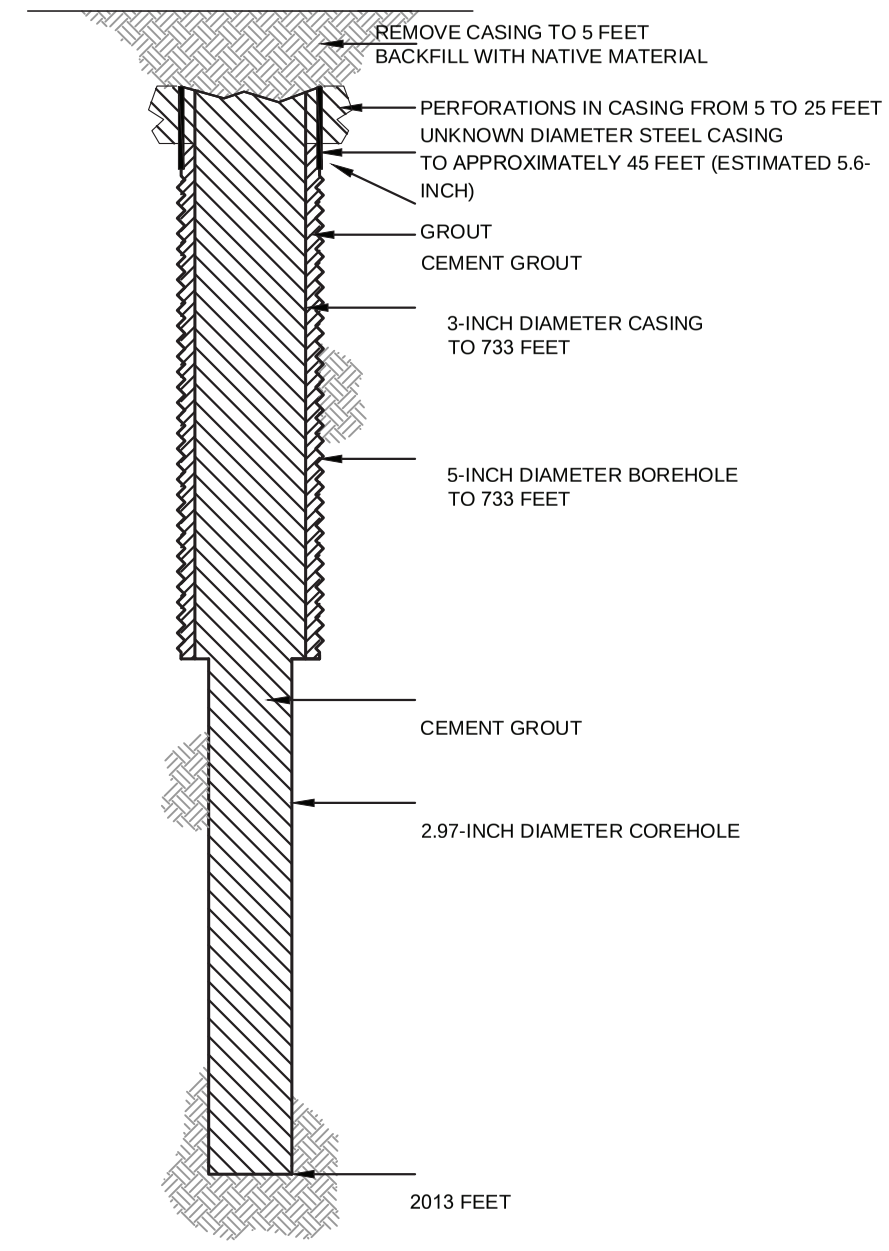

HALEY ALDRICH

FLORENCE COPPER, INC.
FLORENCE, ARIZONA

COREHOLE 490MF DIAGRAM

FLORENCE COPPER INC.

NOT TO SCALE
SEPTEMBER 2019

FIGURE 1

MOBINI, GITA Printed: 4/21/2017 12:00 PM Layout: ABANDON (2)
\PROJECTS\CURIS RESOURCES38706-CURIS FEASIBILITY\DRAWINGS\EPA\WELL ABANDON\415S_ABANDON.DWG

OMB No. 2040-0042 Approval Expires 4/30/2022

United States Environmental Protection Agency

WELL REWORK RECORD, PLUGGING AND ABANDONMENT PLAN, OR PLUGGING AND ABANDONMENT AFFIDAVIT

Name and Address, Phone Number and/or Email of Permittee

Florence Copper Project
1575 W Hunt Hwy,
Florence, AZ 85132

Permit or EPA ID Number	API Number	Full Well Name
R9UIC-AZ3-FY11-1		491MF

State	County
Arizona	Pinal

Locate well in two directions from nearest lines of quarter section and drilling unit

Surface Location

NE 1/4 of NW 1/4 of Section 33 Township 4S Range 9E

Latitude 33.04500271

Longitude -111.4330384

_____ ft. from (N/S) _____ Line of quarter section

_____ ft. from (E/W) _____ Line of quarter section.

Well Class	Timing of Action (pick one)	Type of Action (pick one)
☐ Class I ☐ Class II ☑ Class III ☐ Class V	☑ Notice Prior to Work Date Expected to Commence March 2021 ☐ Report After Work Date Work Ended	☐ Well Rework ☑ Plugging and Abandonment ☐ Conversion to a Non-Injection Well

Provide a narrative description of the work planned to be performed, or that was performed. Use additional pages as necessary. See instructions.

A workover rig capable of performing the required abandonment operations at the required depths will be moved in and set up over the core hole. The core hole will be inspected to determine the depth to which the hole remains open and if any obstructions are present in the core hole; the presence and condition of any existing collar will also be documented. If necessary, the core hole will be cleaned out to a depth of at least 100 feet below the bedrock-LBFU contact to enable placement of cement seals.

If collar is present, an attempt will be made to remove it. If removal of the collar is not feasible, it will be left in the hole and perforated as needed to allow an annular seal to be placed to a depth of at least 25 feet bgs. In areas of agricultural use, the surface casing will be cut at least 5 feet bgs and removed.

If the collar cannot be removed, it will be perforated from at least 20 feet below the bedrock-LBFU contact to at least 20 feet above the contact; from at least 20 feet below the base of the MFGU to at least 20 feet above the top of the MFGU; and from at least 25 feet bgs to 5 feet bgs.

A tremie pipe will be used to place Type V cement in the open core hole from the bottom of the core hole to the top of the core hole. Cement retainers, as described above, will be used to force cement grout into the annulus and behind perforated intervals, as necessary.

If the hole has been obstructed, as much cement as possible will be placed from 100 feet below the LBFU-bedrock contact to the top of the core hole.

The volume of Type V cement will be recorded and will not be less than the estimated volume of material required to fill each interval. All cement grout will consist of Type V cement, or equivalent approved in accordance with the UIC Permit.

Certification

I certify under the penalty of law that I have personally examined and am familiar with the information submitted in this document and all attachments and that, based on my inquiry of those individuals immediately responsible for obtaining the information, I believe that the information is true, accurate, and complete. I am aware that there are significant penalties for submitting false information, including the possibliity of fine and imprisonment. (Ref. 40 CFR § 144.32)

Name and Official Title *(Please type or print)*	Signature	Date Signed
Dan Johnson, VP - General Manager		10/3/2019

INSTRUCTIONS FOR FORM 7520-19

This form replaces forms 7520-12 and 7520-14. Use this form only when work is planned or has occurred that affects the well's construction or operation as an injection well, including work on the casing, tubing or packer (or for shallow Class V wells, the subsurface fluid emplacement network). Use one form per injection well. While reports or other information developed by contractors or service companies may be attached, this form must be signed by a responsible entity as described at 40 CFR 144.32. Note: operators closing Class V wells should use Form 7520-17.

NAME, ADDRESS, PHONE AND/OR EMAIL OF PERMITTEE: Enter the name and street address, city/town, state, and ZIP code of the permittee. Also provide an email address (if available) and/or a phone number.

PERMIT OR EPA ID NUMBER: Enter the well identification number or permit number assigned to the well by the EPA or the permitting authority.

API NUMBER: Enter the number assigned by the local jurisdiction (usually a State Oil and Gas Agency) using the American Petroleum Institute standard numbering system.

FULL WELL NAME: Enter the full name of the well or project.

Enter the **STATE** and **COUNTY** where the well is located. For States that do not have counties, use the name of that State's equivalent jurisdiction at a more local level.

WELL LOCATION: Fill in the complete township, range, and section to the nearest quarter-quarter section. A township is north or south of the baseline, and a range is east or west of the principal meridian (e.g., T12N, R34W). Also include the distance, in feet, from the nearest north or south line and nearest east or west line of the quarter-section. Also, enter the **latitude** and **longitude** of the well in decimal degrees, to five or six places if possible; be sure to include a negative sign for the longitude of a well in the Western Hemisphere and a negative sign for the latitude of a well in the Southern Hemisphere.

Enter the **WELL CLASS,** i.e., the class of injection well as defined in 40 CFR 144.6.

TIMING OF THE ACTION: Check ***Notice prior to work*** if the activity has not yet occurred (i.e., is planned). Check ***Report after work*** if the activity described has already occurred. As appropriate, include the date the activity is expected to start or the date the activity was completed. (Note this may not be available, e.g., for a plugging plan submitted with a permit application.)

TYPE OF ACTION: Check the appropriate box to describe the kind of activity being reported. Check ***Well Rework*** for work that was/will be performed on the well after it has already been in operation as an injection well. Check ***Plugging and Abandonment*** to report on plans for or descriptions of final closure/plugging after use as an injection well. Check ***Conversion to a Non-Injection Well*** if the well is to be converted to something other than an injection well.

Provide a **NARRATIVE DESCRIPTION** of the work planned to be performed, or that was performed. The narrative should include a description of the main procedures planned or that occurred during the work activity. A service company report, daily report, or similar document may be attached if it includes all the requested information and is clear and legible.

For well reworks, include the following information: The reason for the well rework; depths of activity; type of activity; changes to injection well configuration, well casing, or cement behind casing; any plug added to the well and its depth; any newly drilled interval and its depth; method(s) to demonstrate that the well has mechanical integrity (as applicable); and any deviations from the approved rework plan (as applicable).

For a well plugging plan, include the following information: Reason for the well plugging; number of plugs placed, and their depths; materials used as plugs (e.g., cast iron bridge plug, cement, cement retainer); method to set plugs; and wait-on-cement times, if any. Also provide one or more cost estimates from an independent firm in the business of plugging and abandoning wells to plug the well as described in the plan.

For well plugging affidavit, include the following information: Reason for the well plugging; number of plugs placed, and their depths; materials used as plugs (e.g., cast iron bridge plug, cement, cement retainer); method to set plugs; wait-on-cement times, if any; and any deviations from the approved plugging plan (if applicable).

For conversion to a non-injection well, include the following information: Depths of activity; type of activity; changes to injection well configuration, well casing, or cement behind casing; any plug added to the well and its depth; any newly drilled interval and its depth; depths of new perforations; and method(s) to demonstrate that the well has mechanical integrity (as applicable).

For all of the above activities, include a well sketch depicting the work, results of well tests/logging performed, service company tickets, and any other available information demonstrating how the work was/is to be performed. Also, specify whether depths are below ground surface, relative to Kelly bushing, etc.

CERTIFICATION: This form must be signed and dated by either: a responsible corporate officer for a corporation, by a general partner for a partnership, by the proprietor of a sole proprietorship, or by a principal executive or ranking elected official for a public agency.

PAPERWORK REDUCTION ACT NOTICE: The public reporting and recordkeeping burden for this collection of information is estimated to average between 6.0 and 7.9 hours per response, depending on the injection well class. Burden means the total time, effort, or financial resource expended by persons to generate, maintain, retain, or disclose or provide information to or for a Federal Agency. This includes the time needed to review instructions; develop, acquire, install, and utilize technology and systems for the purposes of collecting, validating, and verifying information, processing and maintaining information, and disclosing and providing information; adjust the existing ways to comply with any previously applicable instructions and requirements; train personnel to be able to respond to the collection of information; search data sources; complete and review the collection of information; and, transmit or otherwise disclose the information. An agency may not conduct or sponsor, and a person is not required to respond to, a collection of information unless it displays a currently valid OMB control number. Send comments on the Agency's need for this information, the accuracy of the provided burden estimates, and any suggested methods for minimizing respondent burden, including the use of automated collection techniques to Director, Collection Strategies Division, U.S. Environmental Protection Agency (2822), 1200 Pennsylvania Ave., NW., Washington, D.C. 20460. Include the OMB control number in any correspondence. Do not send the completed forms to this address.

AS-BUILT COREHOLE 491MF

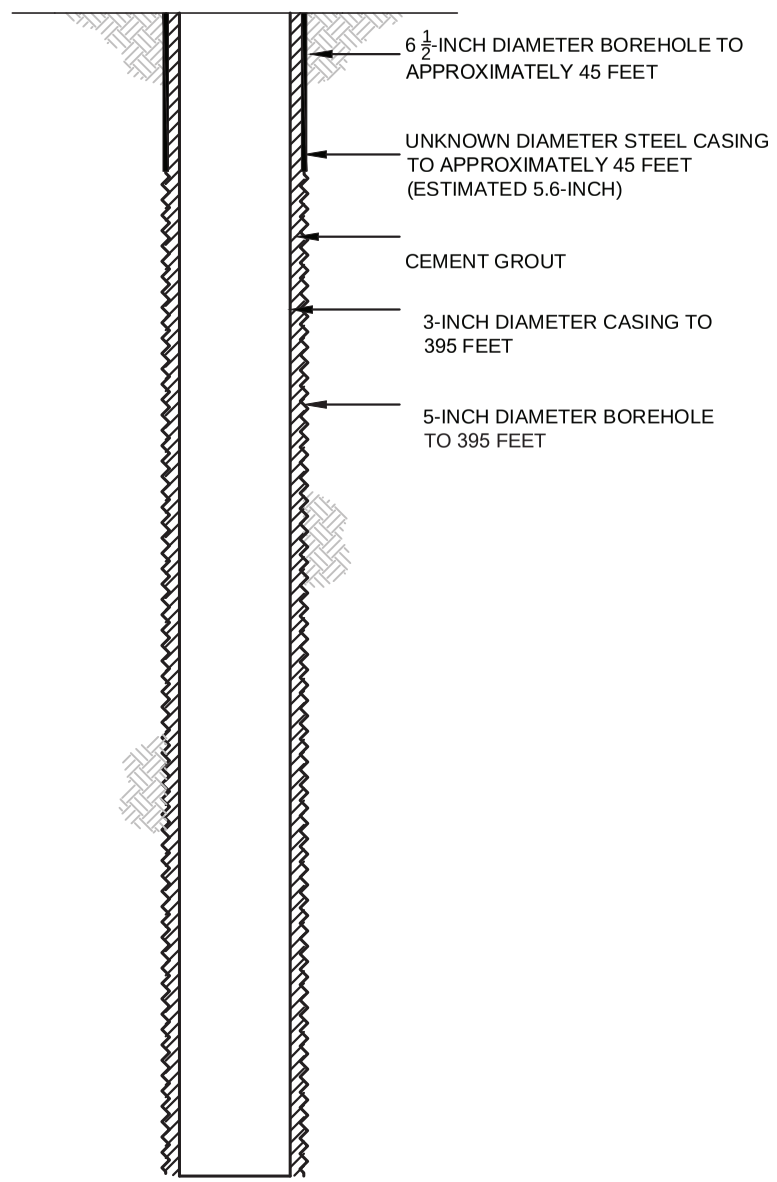

PROPOSED PLUGGING AND ABANDONMENT COREHOLE 491MF

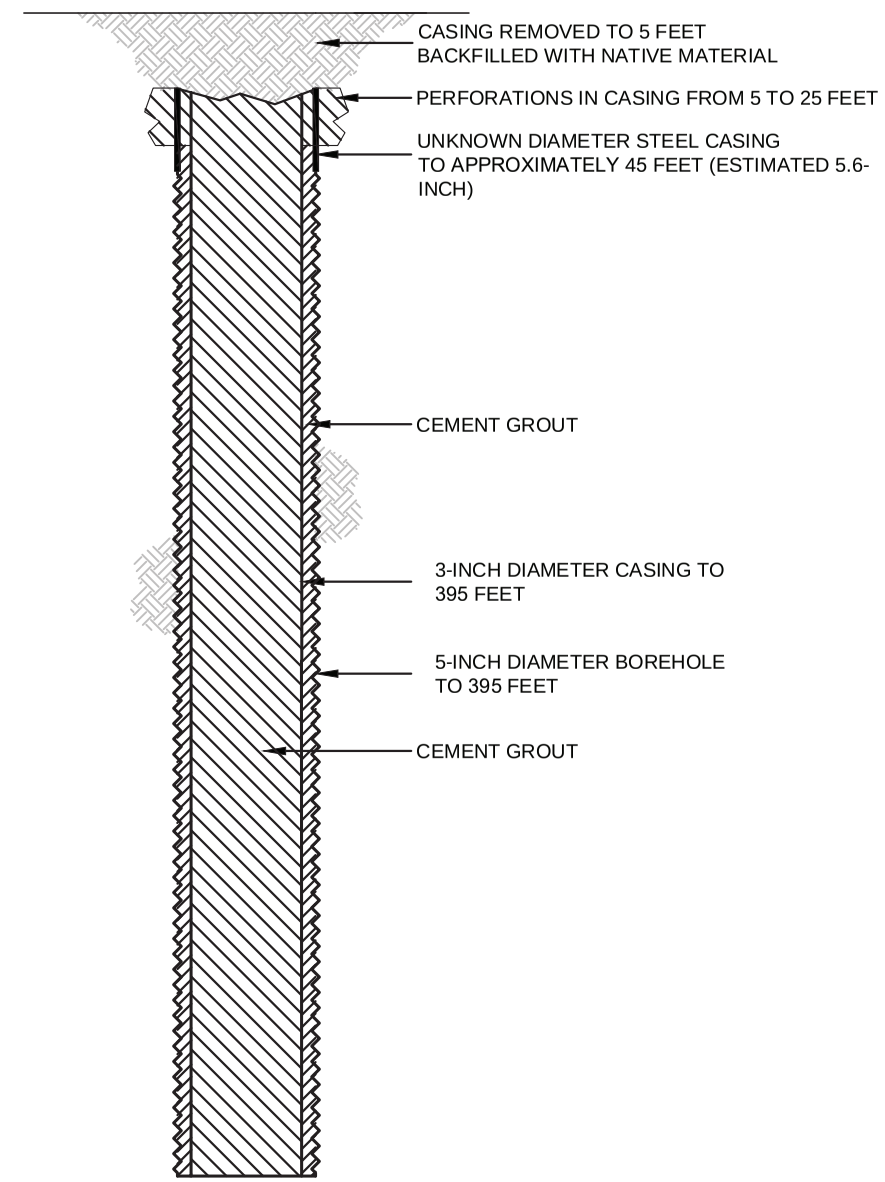

HALEY ALDRICH

FLORENCE COPPER, INC.
FLORENCE, ARIZONA

COREHOLE 491MF DIAGRAM

FLORENCE COPPER INC.

NOT TO SCALE
SEPTEMBER 2019

FIGURE 1

MOBINI, GITA Printed: 4/21/2017 12:13 PM Layout: ABANDON (2)
G:\PROJECTS\CURIS RESOURCES\38706-CURIS FEASIBILITY\DRAWINGS\EPA\WELL\ABANDON\448S_ABANDON.DWG

OMB No. 2040-0042 Approval Expires 4/30/2022

United States Environmental Protection Agency

WELL REWORK RECORD, PLUGGING AND ABANDONMENT PLAN, OR PLUGGING AND ABANDONMENT AFFIDAVIT

Name and Address, Phone Number and/or Email of Permittee

Florence Copper Project
1575 W Hunt Hwy,
Florence, AZ 85132

Permit or EPA ID Number	API Number	Full Well Name
R9UIC-AZ3-FY11-1		492MF

State	County
Arizona	Pinal

Locate well in two directions from nearest lines of quarter section and drilling unit

Latitude 33.04499637

Surface Location

NE **1/4 of** NW **1/4 of Section** 33 **Township** 4S **Range** 9E

Longitude -111.4314067

_____ **ft. from (N/S)** _____ **Line of quarter section**

_____ **ft. from (E/W)** _____ **Line of quarter section.**

Well Class	Timing of Action (pick one)	Type of Action (pick one)
☐ Class I ☐ Class II ☑ Class III ☐ Class V	☑ Notice Prior to Work Date Expected to Commence March 2021 ☐ Report After Work Date Work Ended	☐ Well Rework ☑ Plugging and Abandonment ☐ Conversion to a Non-Injection Well

Provide a narrative description of the work planned to be performed, or that was performed. Use additional pages as necessary. See instructions.

A workover rig capable of performing the required abandonment operations at the required depths will be moved in and set up over the core hole. The core hole will be inspected to determine the depth to which the hole remains open and if any obstructions are present in the core hole; the presence and condition of any existing collar will also be documented. If necessary, the core hole will be cleaned out to a depth of at least 100 feet below the bedrock-LBFU contact to enable placement of cement seals.

If collar is present, an attempt will be made to remove it. If removal of the collar is not feasible, it will be left in the hole and perforated as needed to allow an annular seal to be placed to a depth of at least 25 feet bgs. In areas of agricultural use, the surface casing will be cut at least 5 feet bgs and removed.

If the collar cannot be removed, it will be perforated from at least 20 feet below the bedrock-LBFU contact to at least 20 feet above the contact; from at least 20 feet below the base of the MFGU to at least 20 feet above the top of the MFGU; and from at least 25 feet bgs to 5 feet bgs.

A tremie pipe will be used to place Type V cement in the open core hole from the bottom of the core hole to the top of the core hole. Cement retainers, as described above, will be used to force cement grout into the annulus and behind perforated intervals, as necessary.

If the hole has been obstructed, as much cement as possible will be placed from 100 feet below the LBFU-bedrock contact to the top of the core hole.

The volume of Type V cement will be recorded and will not be less than the estimated volume of material required to fill each interval. All cement grout will consist of Type V cement, or equivalent approved in accordance with the UIC Permit.

Certification

I certify under the penalty of law that I have personally examined and am familiar with the information submitted in this document and all attachments and that, based on my inquiry of those individuals immediately responsible for obtaining the information, I believe that the information is true, accurate, and complete. I am aware that there are significant penalties for submitting false information, including the possibliity of fine and imprisonment. (Ref. 40 CFR § 144.32)

Name and Official Title *(Please type or print)*	Signature	Date Signed
Dan Johnson, VP - General Manager		10/3/2019

INSTRUCTIONS FOR FORM 7520-19

This form replaces forms 7520-12 and 7520-14. Use this form only when work is planned or has occurred that affects the well's construction or operation as an injection well, including work on the casing, tubing or packer (or for shallow Class V wells, the subsurface fluid emplacement network). Use one form per injection well. While reports or other information developed by contractors or service companies may be attached, this form must be signed by a responsible entity as described at 40 CFR 144.32. Note: operators closing Class V wells should use Form 7520-17.

NAME, ADDRESS, PHONE AND/OR EMAIL OF PERMITTEE: Enter the name and street address, city/town, state, and ZIP code of the permittee. Also provide an email address (if available) and/or a phone number.

PERMIT OR EPA ID NUMBER: Enter the well identification number or permit number assigned to the well by the EPA or the permitting authority.

API NUMBER: Enter the number assigned by the local jurisdiction (usually a State Oil and Gas Agency) using the American Petroleum Institute standard numbering system.

FULL WELL NAME: Enter the full name of the well or project.

Enter the **STATE** and **COUNTY** where the well is located. For States that do not have counties, use the name of that State's equivalent jurisdiction at a more local level.

WELL LOCATION: Fill in the complete township, range, and section to the nearest quarter-quarter section. A township is north or south of the baseline, and a range is east or west of the principal meridian (e.g., T12N, R34W). Also include the distance, in feet, from the nearest north or south line and nearest east or west line of the quarter-section. Also, enter the **latitude** and **longitude** of the well in decimal degrees, to five or six places if possible; be sure to include a negative sign for the longitude of a well in the Western Hemisphere and a negative sign for the latitude of a well in the Southern Hemisphere.

Enter the **WELL CLASS,** i.e., the class of injection well as defined in 40 CFR 144.6.

TIMING OF THE ACTION: Check ***Notice prior to work*** if the activity has not yet occurred (i.e., is planned). Check ***Report after work*** if the activity described has already occurred. As appropriate, include the date the activity is expected to start or the date the activity was completed. (Note this may not be available, e.g., for a plugging plan submitted with a permit application.)

TYPE OF ACTION: Check the appropriate box to describe the kind of activity being reported. Check ***Well Rework*** for work that was/will be performed on the well after it has already been in operation as an injection well. Check ***Plugging and Abandonment*** to report on plans for or descriptions of final closure/plugging after use as an injection well. Check ***Conversion to a Non-Injection Well*** if the well is to be converted to something other than an injection well.

Provide a **NARRATIVE DESCRIPTION** of the work planned to be performed, or that was performed. The narrative should include a description of the main procedures planned or that occurred during the work activity. A service company report, daily report, or similar document may be attached if it includes all the requested information and is clear and legible.

For well reworks, include the following information: The reason for the well rework; depths of activity; type of activity; changes to injection well configuration, well casing, or cement behind casing; any plug added to the well and its depth; any newly drilled interval and its depth; method(s) to demonstrate that the well has mechanical integrity (as applicable); and any deviations from the approved rework plan (as applicable).

For a well plugging plan, include the following information: Reason for the well plugging; number of plugs placed, and their depths; materials used as plugs (e.g., cast iron bridge plug, cement, cement retainer); method to set plugs; and wait-on-cement times, if any. Also provide one or more cost estimates from an independent firm in the business of plugging and abandoning wells to plug the well as described in the plan.

For well plugging affidavit, include the following information: Reason for the well plugging; number of plugs placed, and their depths; materials used as plugs (e.g., cast iron bridge plug, cement, cement retainer); method to set plugs; wait-on-cement times, if any; and any deviations from the approved plugging plan (if applicable).

For conversion to a non-injection well, include the following information: Depths of activity; type of activity; changes to injection well configuration, well casing, or cement behind casing; any plug added to the well and its depth; any newly drilled interval and its depth; depths of new perforations; and method(s) to demonstrate that the well has mechanical integrity (as applicable).

For all of the above activities, include a well sketch depicting the work, results of well tests/logging performed, service company tickets, and any other available information demonstrating how the work was/is to be performed. Also, specify whether depths are below ground surface, relative to Kelly bushing, etc.

CERTIFICATION: This form must be signed and dated by either: a responsible corporate officer for a corporation, by a general partner for a partnership, by the proprietor of a sole proprietorship, or by a principal executive or ranking elected official for a public agency.

PAPERWORK REDUCTION ACT NOTICE: The public reporting and recordkeeping burden for this collection of information is estimated to average between 6.0 and 7.9 hours per response, depending on the injection well class. Burden means the total time, effort, or financial resource expended by persons to generate, maintain, retain, or disclose or provide information to or for a Federal Agency. This includes the time needed to review instructions; develop, acquire, install, and utilize technology and systems for the purposes of collecting, validating, and verifying information, processing and maintaining information, and disclosing and providing information; adjust the existing ways to comply with any previously applicable instructions and requirements; train personnel to be able to respond to the collection of information; search data sources; complete and review the collection of information; and, transmit or otherwise disclose the information. An agency may not conduct or sponsor, and a person is not required to respond to, a collection of information unless it displays a currently valid OMB control number. Send comments on the Agency's need for this information, the accuracy of the provided burden estimates, and any suggested methods for minimizing respondent burden, including the use of automated collection techniques to Director, Collection Strategies Division, U.S. Environmental Protection Agency (2822), 1200 Pennsylvania Ave., NW., Washington, D.C. 20460. Include the OMB control number in any correspondence. Do not send the completed forms to this address.

AS-BUILT COREHOLE 492MF

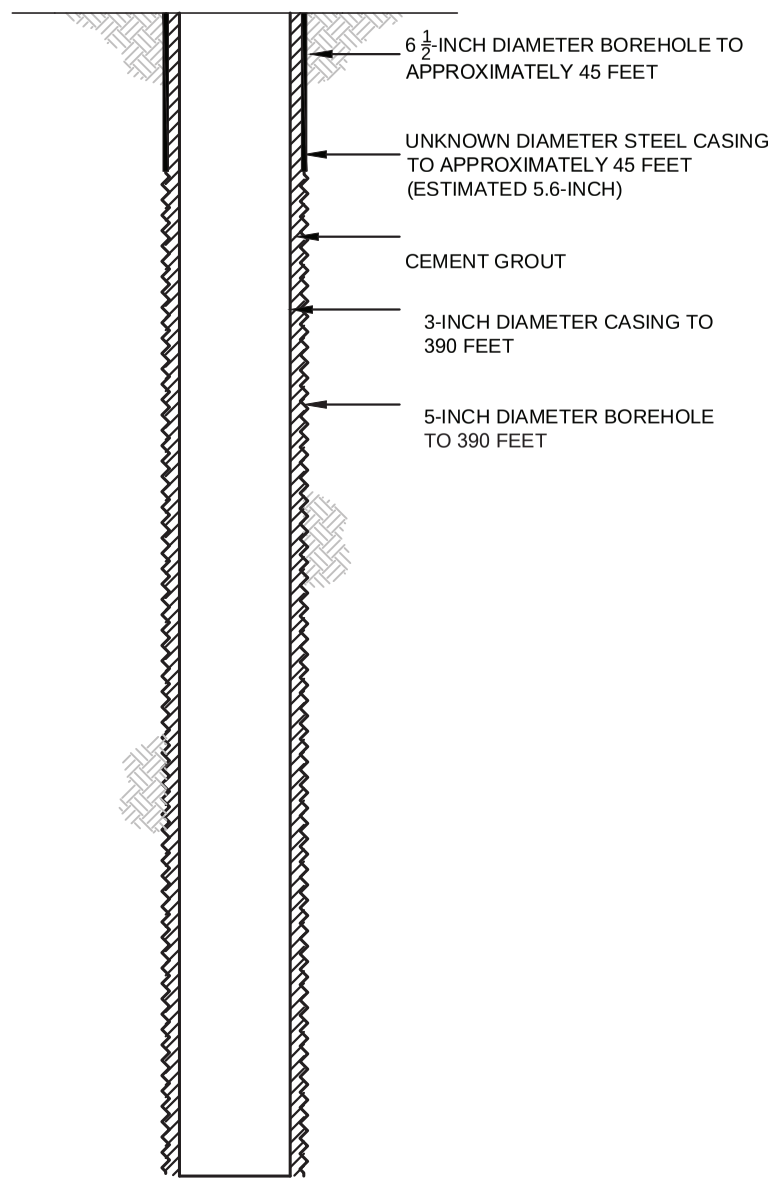

PROPOSED PLUGGING AND ABANDONMENT COREHOLE 492MF

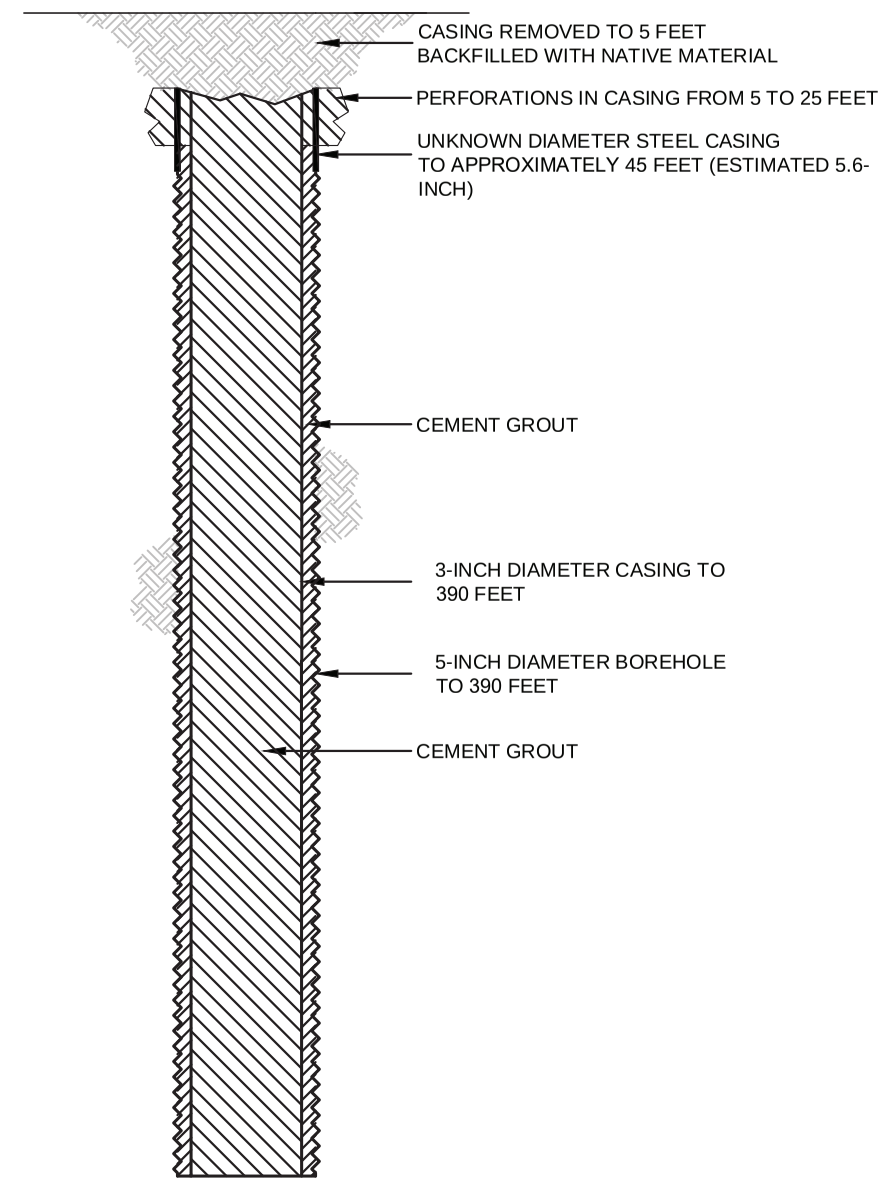

HALEY ALDRICH

FLORENCE COPPER, INC.
FLORENCE, ARIZONA

COREHOLE 492MF DIAGRAM

FLORENCE COPPER INC.

NOT TO SCALE
SEPTEMBER 2019

FIGURE 1

MOBINI, GITA Printed: 4/21/2017 12:13 PM Layout: ABANDON (2)
G:\PROJECTS\CURIS RESOURCES\38706-CURIS FEASIBILITY\DRAWINGS\EPA\WELL\ABANDON\448S_ABANDON.DWG

OMB No. 2040-0042 Approval Expires 4/30/2022

United States Environmental Protection Agency

WELL REWORK RECORD, PLUGGING AND ABANDONMENT PLAN, OR PLUGGING AND ABANDONMENT AFFIDAVIT

Name and Address, Phone Number and/or Email of Permittee

Florence Copper Project
1575 W Hunt Hwy,
Florence, AZ 85132

Permit or EPA ID Number	API Number	Full Well Name
R9UIC-AZ3-FY11-1		495MF

State	County
Arizona	Pinal

Locate well in two directions from nearest lines of quarter section and drilling unit

Surface Location

NE 1/4 of NW 1/4 of Section 33 Township 4S Range 9E

Latitude 33.04439655

Longitude -111.4301862

_____ ft. from (N/S) _____ Line of quarter section

_____ ft. from (E/W) _____ Line of quarter section.

Well Class	Timing of Action (pick one)	Type of Action (pick one)
☐ Class I ☐ Class II ☑ Class III ☐ Class V	☑ Notice Prior to Work Date Expected to Commence March 2021 ☐ Report After Work Date Work Ended	☐ Well Rework ☑ Plugging and Abandonment ☐ Conversion to a Non-Injection Well

Provide a narrative description of the work planned to be performed, or that was performed. Use additional pages as necessary. See instructions.

A workover rig capable of performing the required abandonment operations at the required depths will be moved in and set up over the core hole. The core hole will be inspected to determine the depth to which the hole remains open and if any obstructions are present in the core hole; the presence and condition of any existing collar will also be documented. If necessary, the core hole will be cleaned out to a depth of at least 100 feet below the bedrock-LBFU contact to enable placement of cement seals.

If collar is present, an attempt will be made to remove it. If removal of the collar is not feasible, it will be left in the hole and perforated as needed to allow an annular seal to be placed to a depth of at least 25 feet bgs. In areas of agricultural use, the surface casing will be cut at least 5 feet bgs and removed.

If the collar cannot be removed, it will be perforated from at least 20 feet below the bedrock-LBFU contact to at least 20 feet above the contact; from at least 20 feet below the base of the MFGU to at least 20 feet above the top of the MFGU; and from at least 25 feet bgs to 5 feet bgs.

A tremie pipe will be used to place Type V cement in the open core hole from the bottom of the core hole to the top of the core hole. Cement retainers, as described above, will be used to force cement grout into the annulus and behind perforated intervals, as necessary.

If the hole has been obstructed, as much cement as possible will be placed from 100 feet below the LBFU-bedrock contact to the top of the core hole.

The volume of Type V cement will be recorded and will not be less than the estimated volume of material required to fill each interval. All cement grout will consist of Type V cement, or equivalent approved in accordance with the UIC Permit.

Certification

I certify under the penalty of law that I have personally examined and am familiar with the information submitted in this document and all attachments and that, based on my inquiry of those individuals immediately responsible for obtaining the information, I believe that the information is true, accurate, and complete. I am aware that there are significant penalties for submitting false information, including the possibliity of fine and imprisonment. (Ref. 40 CFR § 144.32)

Name and Official Title *(Please type or print)*	Signature	Date Signed
Dan Johnson, VP - General Manager		10/3/2019

INSTRUCTIONS FOR FORM 7520-19

This form replaces forms 7520-12 and 7520-14. Use this form only when work is planned or has occurred that affects the well's construction or operation as an injection well, including work on the casing, tubing or packer (or for shallow Class V wells, the subsurface fluid emplacement network). Use one form per injection well. While reports or other information developed by contractors or service companies may be attached, this form must be signed by a responsible entity as described at 40 CFR 144.32. Note: operators closing Class V wells should use Form 7520-17.

NAME, ADDRESS, PHONE AND/OR EMAIL OF PERMITTEE: Enter the name and street address, city/town, state, and ZIP code of the permittee. Also provide an email address (if available) and/or a phone number.

PERMIT OR EPA ID NUMBER: Enter the well identification number or permit number assigned to the well by the EPA or the permitting authority.

API NUMBER: Enter the number assigned by the local jurisdiction (usually a State Oil and Gas Agency) using the American Petroleum Institute standard numbering system.

FULL WELL NAME: Enter the full name of the well or project.

Enter the **STATE** and **COUNTY** where the well is located. For States that do not have counties, use the name of that State's equivalent jurisdiction at a more local level.

WELL LOCATION: Fill in the complete township, range, and section to the nearest quarter-quarter section. A township is north or south of the baseline, and a range is east or west of the principal meridian (e.g., T12N, R34W). Also include the distance, in feet, from the nearest north or south line and nearest east or west line of the quarter-section. Also, enter the **latitude** and **longitude** of the well in decimal degrees, to five or six places if possible; be sure to include a negative sign for the longitude of a well in the Western Hemisphere and a negative sign for the latitude of a well in the Southern Hemisphere.

Enter the **WELL CLASS,** i.e., the class of injection well as defined in 40 CFR 144.6.

TIMING OF THE ACTION: Check ***Notice prior to work*** if the activity has not yet occurred (i.e., is planned). Check ***Report after work*** if the activity described has already occurred. As appropriate, include the date the activity is expected to start or the date the activity was completed. (Note this may not be available, e.g., for a plugging plan submitted with a permit application.)

TYPE OF ACTION: Check the appropriate box to describe the kind of activity being reported. Check ***Well Rework*** for work that was/will be performed on the well after it has already been in operation as an injection well. Check ***Plugging and Abandonment*** to report on plans for or descriptions of final closure/plugging after use as an injection well. Check ***Conversion to a Non-Injection Well*** if the well is to be converted to something other than an injection well.

Provide a **NARRATIVE DESCRIPTION** of the work planned to be performed, or that was performed. The narrative should include a description of the main procedures planned or that occurred during the work activity. A service company report, daily report, or similar document may be attached if it includes all the requested information and is clear and legible.

For well reworks, include the following information: The reason for the well rework; depths of activity; type of activity; changes to injection well configuration, well casing, or cement behind casing; any plug added to the well and its depth; any newly drilled interval and its depth; method(s) to demonstrate that the well has mechanical integrity (as applicable); and any deviations from the approved rework plan (as applicable).

For a well plugging plan, include the following information: Reason for the well plugging; number of plugs placed, and their depths; materials used as plugs (e.g., cast iron bridge plug, cement, cement retainer); method to set plugs; and wait-on-cement times, if any. Also provide one or more cost estimates from an independent firm in the business of plugging and abandoning wells to plug the well as described in the plan.

For well plugging affidavit, include the following information: Reason for the well plugging; number of plugs placed, and their depths; materials used as plugs (e.g., cast iron bridge plug, cement, cement retainer); method to set plugs; wait-on-cement times, if any; and any deviations from the approved plugging plan (if applicable).

For conversion to a non-injection well, include the following information: Depths of activity; type of activity; changes to injection well configuration, well casing, or cement behind casing; any plug added to the well and its depth; any newly drilled interval and its depth; depths of new perforations; and method(s) to demonstrate that the well has mechanical integrity (as applicable).

For all of the above activities, include a well sketch depicting the work, results of well tests/logging performed, service company tickets, and any other available information demonstrating how the work was/is to be performed. Also, specify whether depths are below ground surface, relative to Kelly bushing, etc.

CERTIFICATION: This form must be signed and dated by either: a responsible corporate officer for a corporation, by a general partner for a partnership, by the proprietor of a sole proprietorship, or by a principal executive or ranking elected official for a public agency.

PAPERWORK REDUCTION ACT NOTICE: The public reporting and recordkeeping burden for this collection of information is estimated to average between 6.0 and 7.9 hours per response, depending on the injection well class. Burden means the total time, effort, or financial resource expended by persons to generate, maintain, retain, or disclose or provide information to or for a Federal Agency. This includes the time needed to review instructions; develop, acquire, install, and utilize technology and systems for the purposes of collecting, validating, and verifying information, processing and maintaining information, and disclosing and providing information; adjust the existing ways to comply with any previously applicable instructions and requirements; train personnel to be able to respond to the collection of information; search data sources; complete and review the collection of information; and, transmit or otherwise disclose the information. An agency may not conduct or sponsor, and a person is not required to respond to, a collection of information unless it displays a currently valid OMB control number. Send comments on the Agency's need for this information, the accuracy of the provided burden estimates, and any suggested methods for minimizing respondent burden, including the use of automated collection techniques to Director, Collection Strategies Division, U.S. Environmental Protection Agency (2822), 1200 Pennsylvania Ave., NW., Washington, D.C. 20460. Include the OMB control number in any correspondence. Do not send the completed forms to this address.

AS-BUILT COREHOLE 495MF

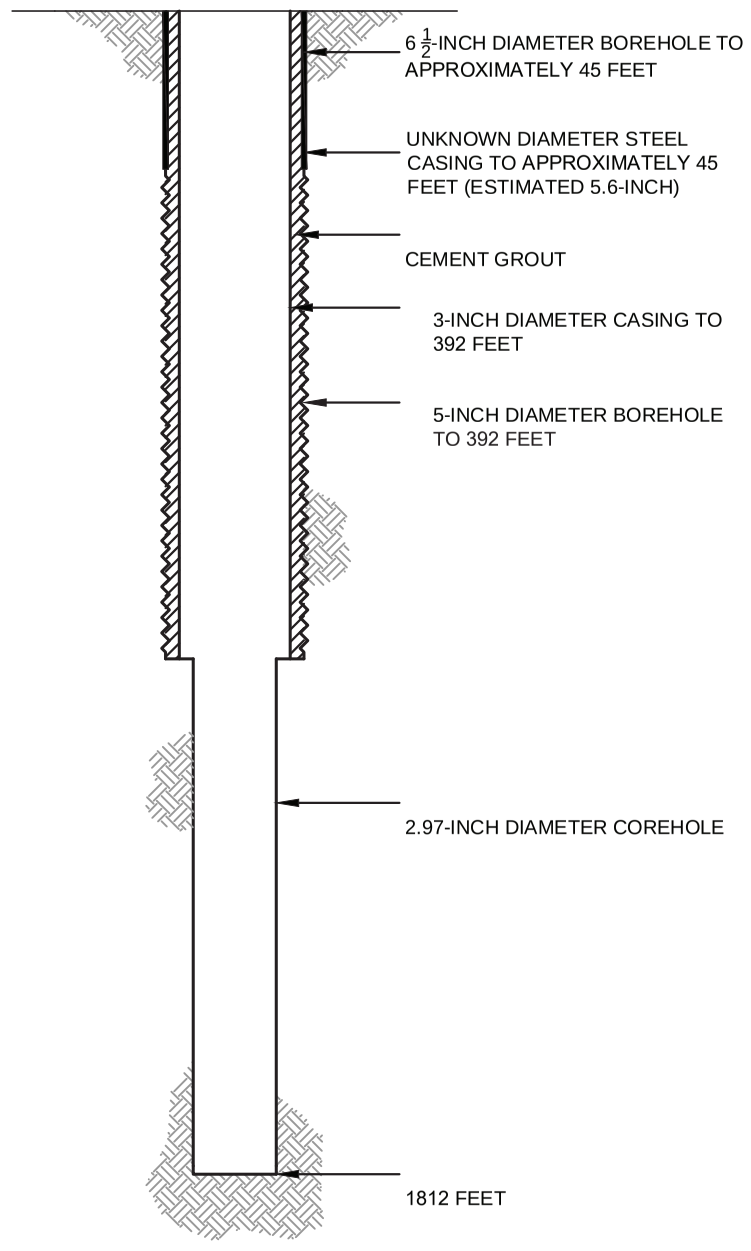

PROPOSED PLUGGING AND ABANDONMENT COREHOLE 495MF

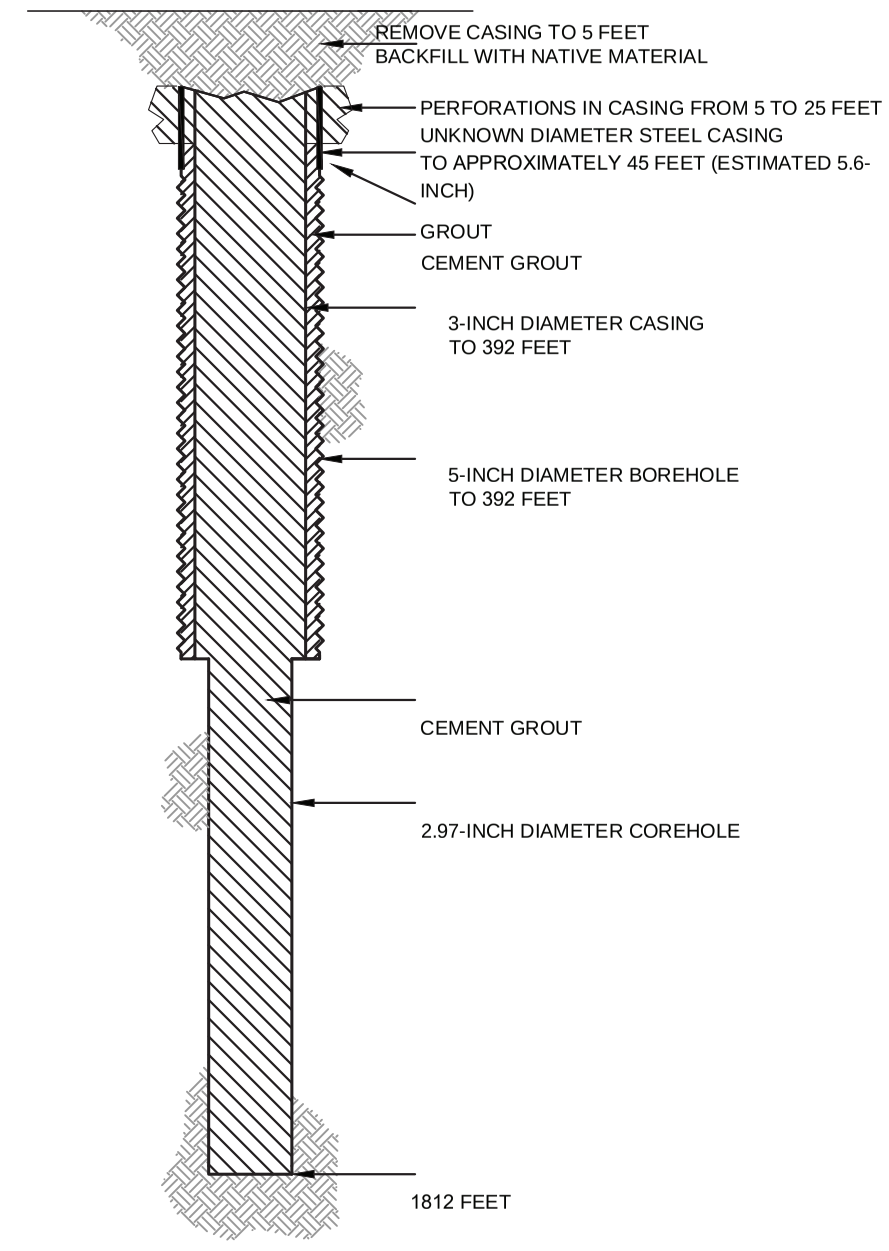

HALEY ALDRICH

FLORENCE COPPER, INC.
FLORENCE, ARIZONA

COREHOLE 495MF DIAGRAM

FLORENCE COPPER INC.

NOT TO SCALE
SEPTEMBER 2019

FIGURE 1

MOBINI, GITA Printed: 4/21/2017 12:00 PM Layout: ABANDON (2)
\PROJECTS\CURIS RESOURCES38706-CURIS FEASIBILITY\DRAWINGS\EPA\WELL ABANDON\415S_ABANDON.DWG

OMB No. 2040-0042 Approval Expires 4/30/2022

United States Environmental Protection Agency

WELL REWORK RECORD, PLUGGING AND ABANDONMENT PLAN, OR PLUGGING AND ABANDONMENT AFFIDAVIT

Name and Address, Phone Number and/or Email of Permittee

Florence Copper Project
1575 W Hunt Hwy,
Florence, AZ 85132

Permit or EPA ID Number	API Number	Full Well Name
R9UIC-AZ3-FY11-1		496MF

State	County
Arizona	Pinal

Locate well in two directions from nearest lines of quarter section and drilling unit

Latitude 33.04439972

Surface Location

NE **1/4 of** NW **1/4 of Section** 33 **Township** 4S **Range** 9E

Longitude -111.4310021

_____ **ft. from (N/S)** _____ **Line of quarter section**

_____ **ft. from (E/W)** _____ **Line of quarter section.**

Well Class	Timing of Action (pick one)	Type of Action (pick one)
☐ Class I ☐ Class II ☑ Class III ☐ Class V	☑ Notice Prior to Work Date Expected to Commence March 2021 ☐ Report After Work Date Work Ended	☐ Well Rework ☑ Plugging and Abandonment ☐ Conversion to a Non-Injection Well

Provide a narrative description of the work planned to be performed, or that was performed. Use additional pages as necessary. See instructions.

A workover rig capable of performing the required abandonment operations at the required depths will be moved in and set up over the core hole. The core hole will be inspected to determine the depth to which the hole remains open and if any obstructions are present in the core hole; the presence and condition of any existing collar will also be documented. If necessary, the core hole will be cleaned out to a depth of at least 100 feet below the bedrock-LBFU contact to enable placement of cement seals.

If collar is present, an attempt will be made to remove it. If removal of the collar is not feasible, it will be left in the hole and perforated as needed to allow an annular seal to be placed to a depth of at least 25 feet bgs. In areas of agricultural use, the surface casing will be cut at least 5 feet bgs and removed.

If the collar cannot be removed, it will be perforated from at least 20 feet below the bedrock-LBFU contact to at least 20 feet above the contact; from at least 20 feet below the base of the MFGU to at least 20 feet above the top of the MFGU; and from at least 25 feet bgs to 5 feet bgs.

A tremie pipe will be used to place Type V cement in the open core hole from the bottom of the core hole to the top of the core hole. Cement retainers, as described above, will be used to force cement grout into the annulus and behind perforated intervals, as necessary.

If the hole has been obstructed, as much cement as possible will be placed from 100 feet below the LBFU-bedrock contact to the top of the core hole.

The volume of Type V cement will be recorded and will not be less than the estimated volume of material required to fill each interval. All cement grout will consist of Type V cement, or equivalent approved in accordance with the UIC Permit.

Certification

I certify under the penalty of law that I have personally examined and am familiar with the information submitted in this document and all attachments and that, based on my inquiry of those individuals immediately responsible for obtaining the information, I believe that the information is true, accurate, and complete. I am aware that there are significant penalties for submitting false information, including the possibliity of fine and imprisonment. (Ref. 40 CFR § 144.32)

Name and Official Title *(Please type or print)*	Signature	Date Signed
Dan Johnson, VP - General Manager		10/3/2019

INSTRUCTIONS FOR FORM 7520-19

This form replaces forms 7520-12 and 7520-14. Use this form only when work is planned or has occurred that affects the well's construction or operation as an injection well, including work on the casing, tubing or packer (or for shallow Class V wells, the subsurface fluid emplacement network). Use one form per injection well. While reports or other information developed by contractors or service companies may be attached, this form must be signed by a responsible entity as described at 40 CFR 144.32. Note: operators closing Class V wells should use Form 7520-17.

NAME, ADDRESS, PHONE AND/OR EMAIL OF PERMITTEE: Enter the name and street address, city/town, state, and ZIP code of the permittee. Also provide an email address (if available) and/or a phone number.

PERMIT OR EPA ID NUMBER: Enter the well identification number or permit number assigned to the well by the EPA or the permitting authority.

API NUMBER: Enter the number assigned by the local jurisdiction (usually a State Oil and Gas Agency) using the American Petroleum Institute standard numbering system.

FULL WELL NAME: Enter the full name of the well or project.

Enter the **STATE** and **COUNTY** where the well is located. For States that do not have counties, use the name of that State's equivalent jurisdiction at a more local level.

WELL LOCATION: Fill in the complete township, range, and section to the nearest quarter-quarter section. A township is north or south of the baseline, and a range is east or west of the principal meridian (e.g., T12N, R34W). Also include the distance, in feet, from the nearest north or south line and nearest east or west line of the quarter-section. Also, enter the **latitude** and **longitude** of the well in decimal degrees, to five or six places if possible; be sure to include a negative sign for the longitude of a well in the Western Hemisphere and a negative sign for the latitude of a well in the Southern Hemisphere.

Enter the **WELL CLASS,** i.e., the class of injection well as defined in 40 CFR 144.6.

TIMING OF THE ACTION: Check ***Notice prior to work*** if the activity has not yet occurred (i.e., is planned). Check ***Report after work*** if the activity described has already occurred. As appropriate, include the date the activity is expected to start or the date the activity was completed. (Note this may not be available, e.g., for a plugging plan submitted with a permit application.)

TYPE OF ACTION: Check the appropriate box to describe the kind of activity being reported. Check ***Well Rework*** for work that was/will be performed on the well after it has already been in operation as an injection well. Check ***Plugging and Abandonment*** to report on plans for or descriptions of final closure/plugging after use as an injection well. Check ***Conversion to a Non-Injection Well*** if the well is to be converted to something other than an injection well.

Provide a **NARRATIVE DESCRIPTION** of the work planned to be performed, or that was performed. The narrative should include a description of the main procedures planned or that occurred during the work activity. A service company report, daily report, or similar document may be attached if it includes all the requested information and is clear and legible.

For well reworks, include the following information: The reason for the well rework; depths of activity; type of activity; changes to injection well configuration, well casing, or cement behind casing; any plug added to the well and its depth; any newly drilled interval and its depth; method(s) to demonstrate that the well has mechanical integrity (as applicable); and any deviations from the approved rework plan (as applicable).

For a well plugging plan, include the following information: Reason for the well plugging; number of plugs placed, and their depths; materials used as plugs (e.g., cast iron bridge plug, cement, cement retainer); method to set plugs; and wait-on-cement times, if any. Also provide one or more cost estimates from an independent firm in the business of plugging and abandoning wells to plug the well as described in the plan.

For well plugging affidavit, include the following information: Reason for the well plugging; number of plugs placed, and their depths; materials used as plugs (e.g., cast iron bridge plug, cement, cement retainer); method to set plugs; wait-on-cement times, if any; and any deviations from the approved plugging plan (if applicable).

For conversion to a non-injection well, include the following information: Depths of activity; type of activity; changes to injection well configuration, well casing, or cement behind casing; any plug added to the well and its depth; any newly drilled interval and its depth; depths of new perforations; and method(s) to demonstrate that the well has mechanical integrity (as applicable).

For all of the above activities, include a well sketch depicting the work, results of well tests/logging performed, service company tickets, and any other available information demonstrating how the work was/is to be performed. Also, specify whether depths are below ground surface, relative to Kelly bushing, etc.

CERTIFICATION: This form must be signed and dated by either: a responsible corporate officer for a corporation, by a general partner for a partnership, by the proprietor of a sole proprietorship, or by a principal executive or ranking elected official for a public agency.

PAPERWORK REDUCTION ACT NOTICE: The public reporting and recordkeeping burden for this collection of information is estimated to average between 6.0 and 7.9 hours per response, depending on the injection well class. Burden means the total time, effort, or financial resource expended by persons to generate, maintain, retain, or disclose or provide information to or for a Federal Agency. This includes the time needed to review instructions; develop, acquire, install, and utilize technology and systems for the purposes of collecting, validating, and verifying information, processing and maintaining information, and disclosing and providing information; adjust the existing ways to comply with any previously applicable instructions and requirements; train personnel to be able to respond to the collection of information; search data sources; complete and review the collection of information; and, transmit or otherwise disclose the information. An agency may not conduct or sponsor, and a person is not required to respond to, a collection of information unless it displays a currently valid OMB control number. Send comments on the Agency's need for this information, the accuracy of the provided burden estimates, and any suggested methods for minimizing respondent burden, including the use of automated collection techniques to Director, Collection Strategies Division, U.S. Environmental Protection Agency (2822), 1200 Pennsylvania Ave., NW., Washington, D.C. 20460. Include the OMB control number in any correspondence. Do not send the completed forms to this address.

AS-BUILT COREHOLE 496MF

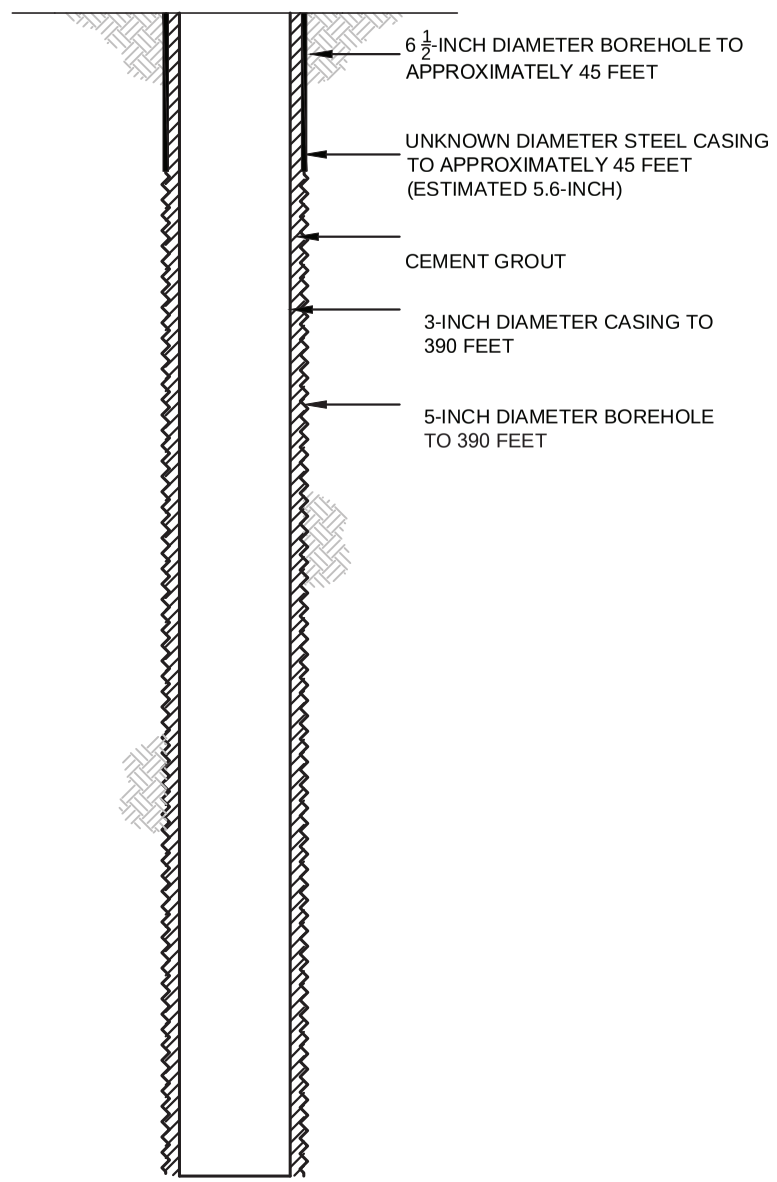

PROPOSED PLUGGING AND ABANDONMENT COREHOLE 496MF

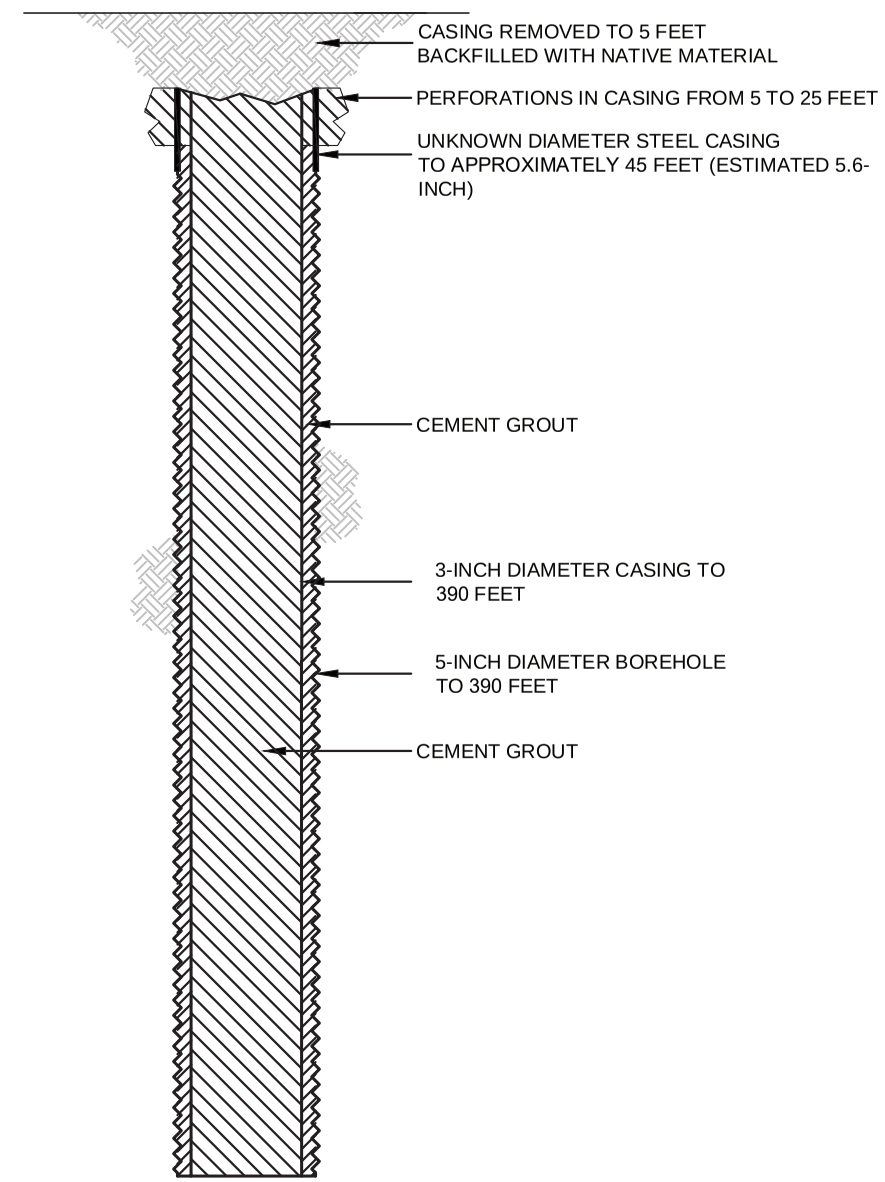

HALEY ALDRICH

FLORENCE COPPER, INC.
FLORENCE, ARIZONA

COREHOLE 496MF DIAGRAM

FLORENCE COPPER INC.

NOT TO SCALE
SEPTEMBER 2019

FIGURE 1

MOBINI, GITA
Printed: 4/21/2017 12:13 PM Layout: ABANDON (2)
G:\PROJECTS\CURIS RESOURCES\38706-CURIS FEASIBILITY\DRAWINGS\EPA\WELL\ABANDON\448S_ABANDON.DWG

OMB No. 2040-0042 Approval Expires 4/30/2022

United States Environmental Protection Agency

WELL REWORK RECORD, PLUGGING AND ABANDONMENT PLAN, OR PLUGGING AND ABANDONMENT AFFIDAVIT

Name and Address, Phone Number and/or Email of Permittee

Florence Copper Project
1575 W Hunt Hwy,
Florence, AZ 85132

Permit or EPA ID Number	API Number	Full Well Name
R9UIC-AZ3-FY11-1		497MF

State	County
Arizona	Pinal

Locate well in two directions from nearest lines of quarter section and drilling unit

Latitude 33.0444029

Surface Location

NE **1/4 of** NW **1/4 of Section** 33 **Township** 4S **Range** 9E

Longitude -111.4318179

_____ **ft. from (N/S)** _____ **Line of quarter section**

_____ **ft. from (E/W)** _____ **Line of quarter section.**

Well Class	Timing of Action (pick one)	Type of Action (pick one)
☐ Class I ☐ Class II ☑ Class III ☐ Class V	☑ Notice Prior to Work Date Expected to Commence March 2021 ☐ Report After Work Date Work Ended	☐ Well Rework ☑ Plugging and Abandonment ☐ Conversion to a Non-Injection Well

Provide a narrative description of the work planned to be performed, or that was performed. Use additional pages as necessary. See instructions.

A workover rig capable of performing the required abandonment operations at the required depths will be moved in and set up over the core hole. The core hole will be inspected to determine the depth to which the hole remains open and if any obstructions are present in the core hole; the presence and condition of any existing collar will also be documented. If necessary, the core hole will be cleaned out to a depth of at least 100 feet below the bedrock-LBFU contact to enable placement of cement seals.

If collar is present, an attempt will be made to remove it. If removal of the collar is not feasible, it will be left in the hole and perforated as needed to allow an annular seal to be placed to a depth of at least 25 feet bgs. In areas of agricultural use, the surface casing will be cut at least 5 feet bgs and removed.

If the collar cannot be removed, it will be perforated from at least 20 feet below the bedrock-LBFU contact to at least 20 feet above the contact; from at least 20 feet below the base of the MFGU to at least 20 feet above the top of the MFGU; and from at least 25 feet bgs to 5 feet bgs.

A tremie pipe will be used to place Type V cement in the open core hole from the bottom of the core hole to the top of the core hole. Cement retainers, as described above, will be used to force cement grout into the annulus and behind perforated intervals, as necessary.

If the hole has been obstructed, as much cement as possible will be placed from 100 feet below the LBFU-bedrock contact to the top of the core hole.

The volume of Type V cement will be recorded and will not be less than the estimated volume of material required to fill each interval. All cement grout will consist of Type V cement, or equivalent approved in accordance with the UIC Permit.

Certification

I certify under the penalty of law that I have personally examined and am familiar with the information submitted in this document and all attachments and that, based on my inquiry of those individuals immediately responsible for obtaining the information, I believe that the information is true, accurate, and complete. I am aware that there are significant penalties for submitting false information, including the possibliity of fine and imprisonment. (Ref. 40 CFR § 144.32)

Name and Official Title *(Please type or print)*	Signature	Date Signed
Dan Johnson, VP - General Manager		10/3/2019

INSTRUCTIONS FOR FORM 7520-19

This form replaces forms 7520-12 and 7520-14. Use this form only when work is planned or has occurred that affects the well's construction or operation as an injection well, including work on the casing, tubing or packer (or for shallow Class V wells, the subsurface fluid emplacement network). Use one form per injection well. While reports or other information developed by contractors or service companies may be attached, this form must be signed by a responsible entity as described at 40 CFR 144.32. Note: operators closing Class V wells should use Form 7520-17.

NAME, ADDRESS, PHONE AND/OR EMAIL OF PERMITTEE: Enter the name and street address, city/town, state, and ZIP code of the permittee. Also provide an email address (if available) and/or a phone number.

PERMIT OR EPA ID NUMBER: Enter the well identification number or permit number assigned to the well by the EPA or the permitting authority.

API NUMBER: Enter the number assigned by the local jurisdiction (usually a State Oil and Gas Agency) using the American Petroleum Institute standard numbering system.

FULL WELL NAME: Enter the full name of the well or project.

Enter the **STATE** and **COUNTY** where the well is located. For States that do not have counties, use the name of that State's equivalent jurisdiction at a more local level.

WELL LOCATION: Fill in the complete township, range, and section to the nearest quarter-quarter section. A township is north or south of the baseline, and a range is east or west of the principal meridian (e.g., T12N, R34W). Also include the distance, in feet, from the nearest north or south line and nearest east or west line of the quarter-section. Also, enter the **latitude** and **longitude** of the well in decimal degrees, to five or six places if possible; be sure to include a negative sign for the longitude of a well in the Western Hemisphere and a negative sign for the latitude of a well in the Southern Hemisphere.

Enter the **WELL CLASS,** i.e., the class of injection well as defined in 40 CFR 144.6.

TIMING OF THE ACTION: Check ***Notice prior to work*** if the activity has not yet occurred (i.e., is planned). Check ***Report after work*** if the activity described has already occurred. As appropriate, include the date the activity is expected to start or the date the activity was completed. (Note this may not be available, e.g., for a plugging plan submitted with a permit application.)

TYPE OF ACTION: Check the appropriate box to describe the kind of activity being reported. Check ***Well Rework*** for work that was/will be performed on the well after it has already been in operation as an injection well. Check ***Plugging and Abandonment*** to report on plans for or descriptions of final closure/plugging after use as an injection well. Check ***Conversion to a Non-Injection Well*** if the well is to be converted to something other than an injection well.

Provide a **NARRATIVE DESCRIPTION** of the work planned to be performed, or that was performed. The narrative should include a description of the main procedures planned or that occurred during the work activity. A service company report, daily report, or similar document may be attached if it includes all the requested information and is clear and legible.

For well reworks, include the following information: The reason for the well rework; depths of activity; type of activity; changes to injection well configuration, well casing, or cement behind casing; any plug added to the well and its depth; any newly drilled interval and its depth; method(s) to demonstrate that the well has mechanical integrity (as applicable); and any deviations from the approved rework plan (as applicable).

For a well plugging plan, include the following information: Reason for the well plugging; number of plugs placed, and their depths; materials used as plugs (e.g., cast iron bridge plug, cement, cement retainer); method to set plugs; and wait-on-cement times, if any. Also provide one or more cost estimates from an independent firm in the business of plugging and abandoning wells to plug the well as described in the plan.

For well plugging affidavit, include the following information: Reason for the well plugging; number of plugs placed, and their depths; materials used as plugs (e.g., cast iron bridge plug, cement, cement retainer); method to set plugs; wait-on-cement times, if any; and any deviations from the approved plugging plan (if applicable).

For conversion to a non-injection well, include the following information: Depths of activity; type of activity; changes to injection well configuration, well casing, or cement behind casing; any plug added to the well and its depth; any newly drilled interval and its depth; depths of new perforations; and method(s) to demonstrate that the well has mechanical integrity (as applicable).

For all of the above activities, include a well sketch depicting the work, results of well tests/logging performed, service company tickets, and any other available information demonstrating how the work was/is to be performed. Also, specify whether depths are below ground surface, relative to Kelly bushing, etc.

CERTIFICATION: This form must be signed and dated by either: a responsible corporate officer for a corporation, by a general partner for a partnership, by the proprietor of a sole proprietorship, or by a principal executive or ranking elected official for a public agency.

PAPERWORK REDUCTION ACT NOTICE: The public reporting and recordkeeping burden for this collection of information is estimated to average between 6.0 and 7.9 hours per response, depending on the injection well class. Burden means the total time, effort, or financial resource expended by persons to generate, maintain, retain, or disclose or provide information to or for a Federal Agency. This includes the time needed to review instructions; develop, acquire, install, and utilize technology and systems for the purposes of collecting, validating, and verifying information, processing and maintaining information, and disclosing and providing information; adjust the existing ways to comply with any previously applicable instructions and requirements; train personnel to be able to respond to the collection of information; search data sources; complete and review the collection of information; and, transmit or otherwise disclose the information. An agency may not conduct or sponsor, and a person is not required to respond to, a collection of information unless it displays a currently valid OMB control number. Send comments on the Agency's need for this information, the accuracy of the provided burden estimates, and any suggested methods for minimizing respondent burden, including the use of automated collection techniques to Director, Collection Strategies Division, U.S. Environmental Protection Agency (2822), 1200 Pennsylvania Ave., NW., Washington, D.C. 20460. Include the OMB control number in any correspondence. Do not send the completed forms to this address.

AS-BUILT COREHOLE 497MF

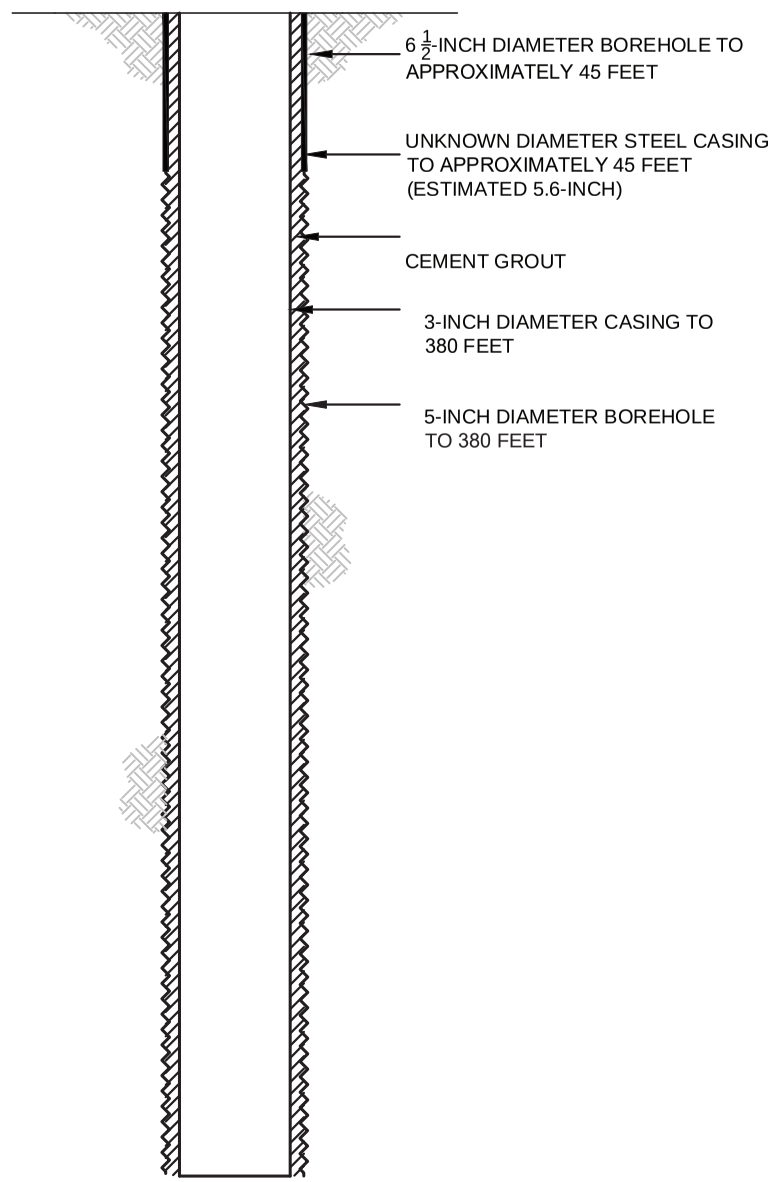

PROPOSED PLUGGING AND ABANDONMENT COREHOLE 497MF

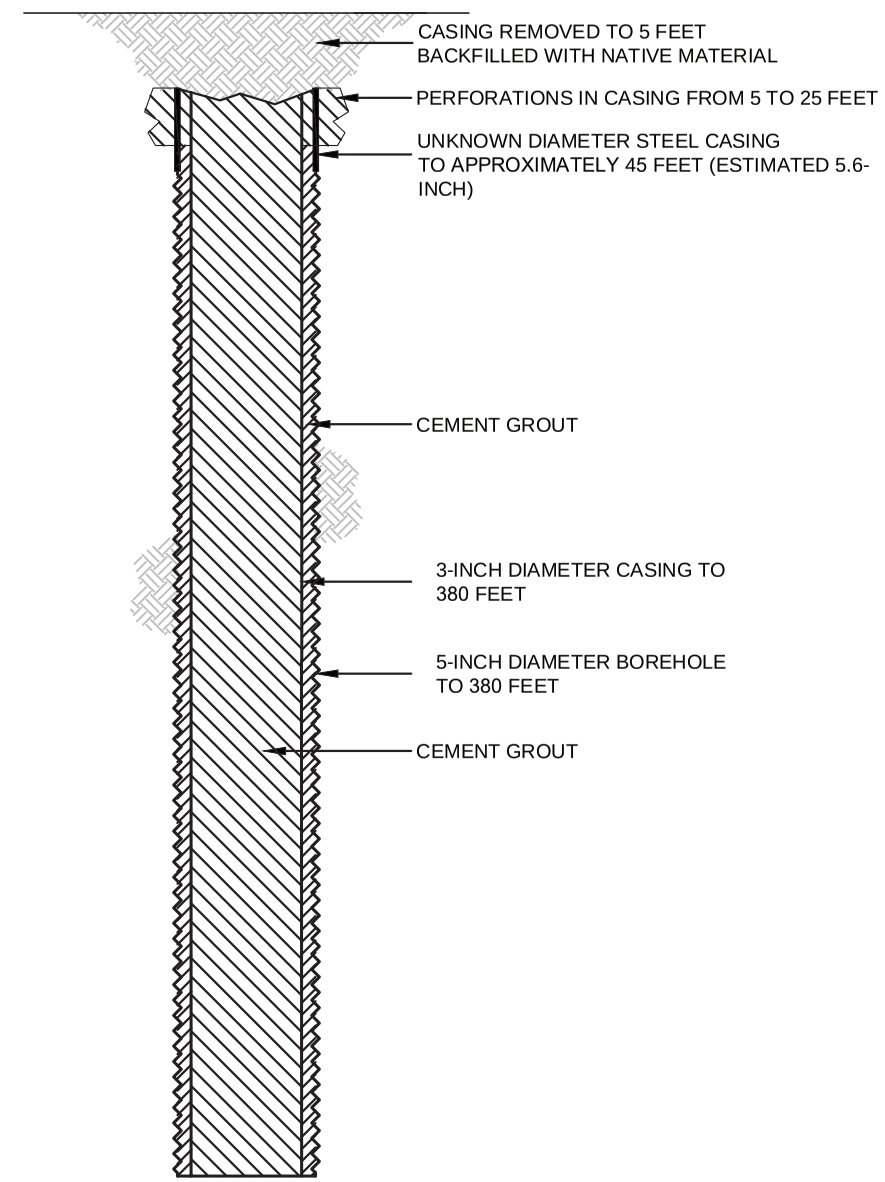

HALEY ALDRICH

FLORENCE COPPER, INC.
FLORENCE, ARIZONA

COREHOLE 497MF DIAGRAM

FLORENCE COPPER INC.

NOT TO SCALE
SEPTEMBER 2019

FIGURE 1

MOBINI, GITA Printed: 4/21/2017 12:13 PM Layout: ABANDON (2)
G:\PROJECTS\CURIS RESOURCES\38706-CURIS FEASIBILITY\DRAWINGS\EPA\WELL\ABANDON\448S_ABANDON.DWG

OMB No. 2040-0042 Approval Expires 4/30/2022

United States Environmental Protection Agency

WELL REWORK RECORD, PLUGGING AND ABANDONMENT PLAN, OR PLUGGING AND ABANDONMENT AFFIDAVIT

Name and Address, Phone Number and/or Email of Permittee

Florence Copper Project
1575 W Hunt Hwy,
Florence, AZ 85132

Permit or EPA ID Number	API Number	Full Well Name
R9UIC-AZ3-FY11-1		498MF

State	County
Arizona	Pinal

Locate well in two directions from nearest lines of quarter section and drilling unit

Surface Location

NE 1/4 of NW 1/4 of Section 33 Township 4S Range 9E

Latitude 33.04440607

Longitude -111.4326337

ft. from (N/S) Line of quarter section

ft. from (E/W) Line of quarter section.

Well Class	Timing of Action (pick one)	Type of Action (pick one)
☐ Class I ☐ Class II ☑ Class III ☐ Class V	☑ Notice Prior to Work Date Expected to Commence March 2021 ☐ Report After Work Date Work Ended	☐ Well Rework ☑ Plugging and Abandonment ☐ Conversion to a Non-Injection Well

Provide a narrative description of the work planned to be performed, or that was performed. Use additional pages as necessary. See instructions.

A workover rig capable of performing the required abandonment operations at the required depths will be moved in and set up over the core hole. The core hole will be inspected to determine the depth to which the hole remains open and if any obstructions are present in the core hole; the presence and condition of any existing collar will also be documented. If necessary, the core hole will be cleaned out to a depth of at least 100 feet below the bedrock-LBFU contact to enable placement of cement seals.

If collar is present, an attempt will be made to remove it. If removal of the collar is not feasible, it will be left in the hole and perforated as needed to allow an annular seal to be placed to a depth of at least 25 feet bgs. In areas of agricultural use, the surface casing will be cut at least 5 feet bgs and removed.

If the collar cannot be removed, it will be perforated from at least 20 feet below the bedrock-LBFU contact to at least 20 feet above the contact; from at least 20 feet below the base of the MFGU to at least 20 feet above the top of the MFGU; and from at least 25 feet bgs to 5 feet bgs.

A tremie pipe will be used to place Type V cement in the open core hole from the bottom of the core hole to the top of the core hole. Cement retainers, as described above, will be used to force cement grout into the annulus and behind perforated intervals, as necessary.

If the hole has been obstructed, as much cement as possible will be placed from 100 feet below the LBFU-bedrock contact to the top of the core hole.

The volume of Type V cement will be recorded and will not be less than the estimated volume of material required to fill each interval. All cement grout will consist of Type V cement, or equivalent approved in accordance with the UIC Permit.

Certification

I certify under the penalty of law that I have personally examined and am familiar with the information submitted in this document and all attachments and that, based on my inquiry of those individuals immediately responsible for obtaining the information, I believe that the information is true, accurate, and complete. I am aware that there are significant penalties for submitting false information, including the possibliity of fine and imprisonment. (Ref. 40 CFR § 144.32)

Name and Official Title *(Please type or print)*	Signature	Date Signed
Dan Johnson, VP - General Manager		10/3/2019

INSTRUCTIONS FOR FORM 7520-19

This form replaces forms 7520-12 and 7520-14. Use this form only when work is planned or has occurred that affects the well's construction or operation as an injection well, including work on the casing, tubing or packer (or for shallow Class V wells, the subsurface fluid emplacement network). Use one form per injection well. While reports or other information developed by contractors or service companies may be attached, this form must be signed by a responsible entity as described at 40 CFR 144.32. Note: operators closing Class V wells should use Form 7520-17.

NAME, ADDRESS, PHONE AND/OR EMAIL OF PERMITTEE: Enter the name and street address, city/town, state, and ZIP code of the permittee. Also provide an email address (if available) and/or a phone number.

PERMIT OR EPA ID NUMBER: Enter the well identification number or permit number assigned to the well by the EPA or the permitting authority.

API NUMBER: Enter the number assigned by the local jurisdiction (usually a State Oil and Gas Agency) using the American Petroleum Institute standard numbering system.

FULL WELL NAME: Enter the full name of the well or project.

Enter the **STATE** and **COUNTY** where the well is located. For States that do not have counties, use the name of that State's equivalent jurisdiction at a more local level.

WELL LOCATION: Fill in the complete township, range, and section to the nearest quarter-quarter section. A township is north or south of the baseline, and a range is east or west of the principal meridian (e.g., T12N, R34W). Also include the distance, in feet, from the nearest north or south line and nearest east or west line of the quarter-section. Also, enter the **latitude** and **longitude** of the well in decimal degrees, to five or six places if possible; be sure to include a negative sign for the longitude of a well in the Western Hemisphere and a negative sign for the latitude of a well in the Southern Hemisphere.

Enter the **WELL CLASS,** i.e., the class of injection well as defined in 40 CFR 144.6.

TIMING OF THE ACTION: Check ***Notice prior to work*** if the activity has not yet occurred (i.e., is planned). Check ***Report after work*** if the activity described has already occurred. As appropriate, include the date the activity is expected to start or the date the activity was completed. (Note this may not be available, e.g., for a plugging plan submitted with a permit application.)

TYPE OF ACTION: Check the appropriate box to describe the kind of activity being reported. Check ***Well Rework*** for work that was/will be performed on the well after it has already been in operation as an injection well. Check ***Plugging and Abandonment*** to report on plans for or descriptions of final closure/plugging after use as an injection well. Check ***Conversion to a Non-Injection Well*** if the well is to be converted to something other than an injection well.

Provide a **NARRATIVE DESCRIPTION** of the work planned to be performed, or that was performed. The narrative should include a description of the main procedures planned or that occurred during the work activity. A service company report, daily report, or similar document may be attached if it includes all the requested information and is clear and legible.

For well reworks, include the following information: The reason for the well rework; depths of activity; type of activity; changes to injection well configuration, well casing, or cement behind casing; any plug added to the well and its depth; any newly drilled interval and its depth; method(s) to demonstrate that the well has mechanical integrity (as applicable); and any deviations from the approved rework plan (as applicable).

For a well plugging plan, include the following information: Reason for the well plugging; number of plugs placed, and their depths; materials used as plugs (e.g., cast iron bridge plug, cement, cement retainer); method to set plugs; and wait-on-cement times, if any. Also provide one or more cost estimates from an independent firm in the business of plugging and abandoning wells to plug the well as described in the plan.

For well plugging affidavit, include the following information: Reason for the well plugging; number of plugs placed, and their depths; materials used as plugs (e.g., cast iron bridge plug, cement, cement retainer); method to set plugs; wait-on-cement times, if any; and any deviations from the approved plugging plan (if applicable).

For conversion to a non-injection well, include the following information: Depths of activity; type of activity; changes to injection well configuration, well casing, or cement behind casing; any plug added to the well and its depth; any newly drilled interval and its depth; depths of new perforations; and method(s) to demonstrate that the well has mechanical integrity (as applicable).

For all of the above activities, include a well sketch depicting the work, results of well tests/logging performed, service company tickets, and any other available information demonstrating how the work was/is to be performed. Also, specify whether depths are below ground surface, relative to Kelly bushing, etc.

CERTIFICATION: This form must be signed and dated by either: a responsible corporate officer for a corporation, by a general partner for a partnership, by the proprietor of a sole proprietorship, or by a principal executive or ranking elected official for a public agency.

PAPERWORK REDUCTION ACT NOTICE: The public reporting and recordkeeping burden for this collection of information is estimated to average between 6.0 and 7.9 hours per response, depending on the injection well class. Burden means the total time, effort, or financial resource expended by persons to generate, maintain, retain, or disclose or provide information to or for a Federal Agency. This includes the time needed to review instructions; develop, acquire, install, and utilize technology and systems for the purposes of collecting, validating, and verifying information, processing and maintaining information, and disclosing and providing information; adjust the existing ways to comply with any previously applicable instructions and requirements; train personnel to be able to respond to the collection of information; search data sources; complete and review the collection of information; and, transmit or otherwise disclose the information. An agency may not conduct or sponsor, and a person is not required to respond to, a collection of information unless it displays a currently valid OMB control number. Send comments on the Agency's need for this information, the accuracy of the provided burden estimates, and any suggested methods for minimizing respondent burden, including the use of automated collection techniques to Director, Collection Strategies Division, U.S. Environmental Protection Agency (2822), 1200 Pennsylvania Ave., NW., Washington, D.C. 20460. Include the OMB control number in any correspondence. Do not send the completed forms to this address.

AS-BUILT COREHOLE 498MF

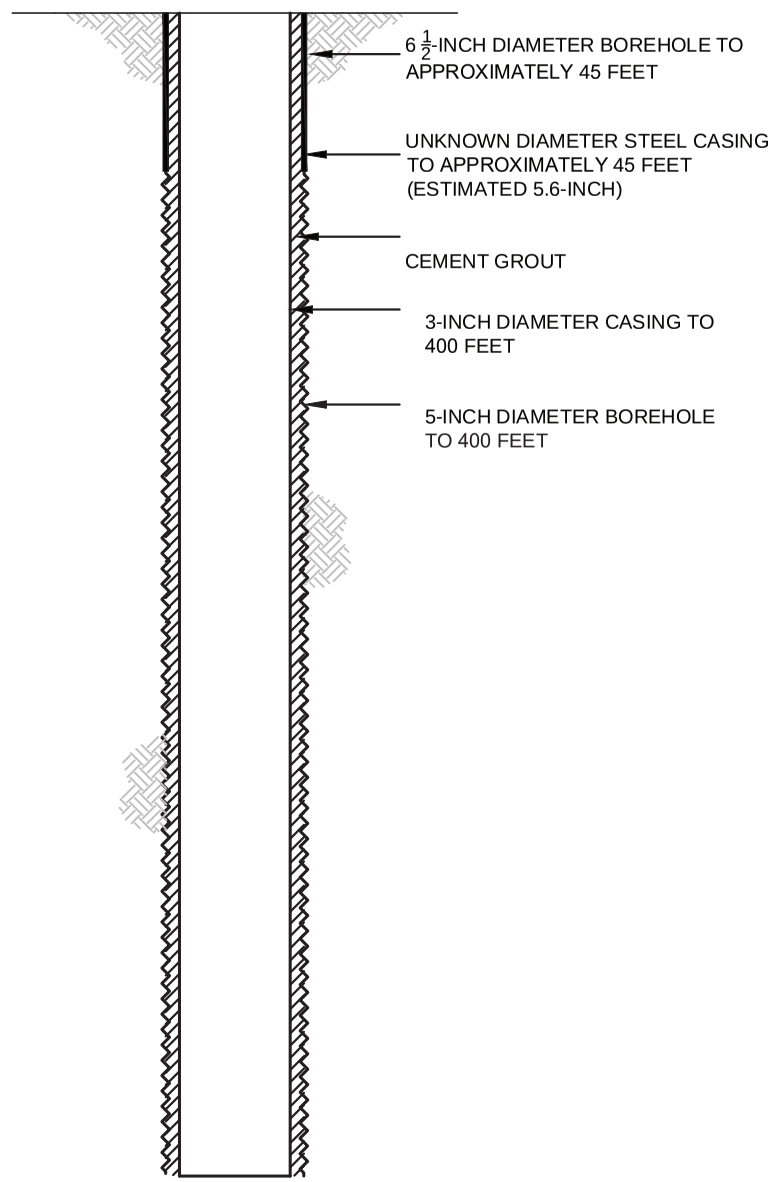

PROPOSED PLUGGING AND ABANDONMENT COREHOLE 498MF

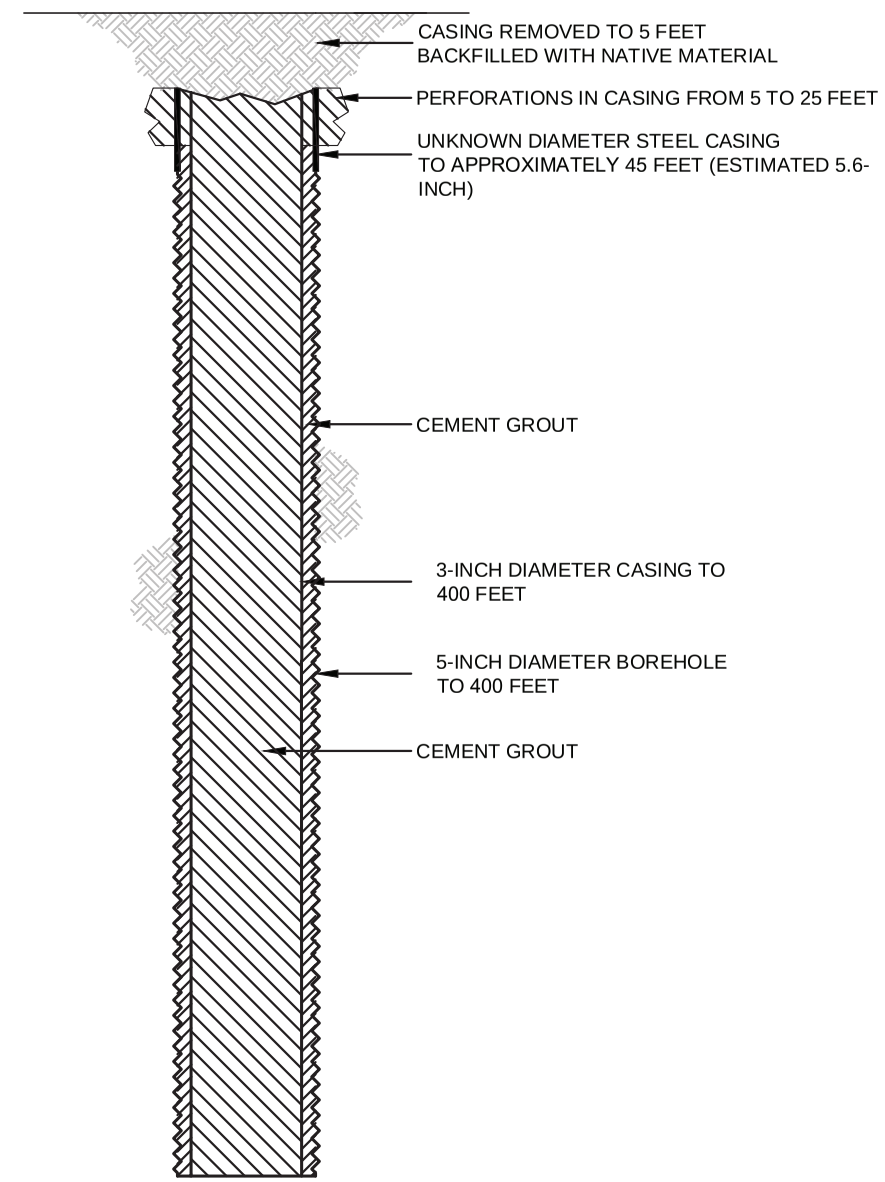

HALEY ALDRICH

FLORENCE COPPER, INC.
FLORENCE, ARIZONA

COREHOLE 498MF DIAGRAM

FLORENCE COPPER INC.

NOT TO SCALE
SEPTEMBER 2019

FIGURE 1

MOBINI, GITA Printed: 4/21/2017 12:13 PM Layout: ABANDON (2)
G:\PROJECTS\CURIS RESOURCES\38706-CURIS FEASIBILITY\DRAWINGS\EPA\WELL\ABANDON\448S_ABANDON.DWG

OMB No. 2040-0042 Approval Expires 4/30/2022

United States Environmental Protection Agency

WELL REWORK RECORD, PLUGGING AND ABANDONMENT PLAN, OR PLUGGING AND ABANDONMENT AFFIDAVIT

Name and Address, Phone Number and/or Email of Permittee

Florence Copper Project
1575 W Hunt Hwy,
Florence, AZ 85132

Permit or EPA ID Number	API Number	Full Well Name
R9UIC-AZ3-FY11-1		499MF

State	County
Arizona	Pinal

Locate well in two directions from nearest lines of quarter section and drilling unit

Latitude 33.04440923

Surface Location

NE **1/4 of** NW **1/4 of Section** 33 **Township** 4S **Range** 9E

Longitude -111.4334495

_____ **ft. from (N/S)** _____ **Line of quarter section**

_____ **ft. from (E/W)** _____ **Line of quarter section.**

Well Class	Timing of Action (pick one)	Type of Action (pick one)
☐ Class I ☐ Class II ☑ Class III ☐ Class V	☑ Notice Prior to Work Date Expected to Commence March 2021 ☐ Report After Work Date Work Ended	☐ Well Rework ☑ Plugging and Abandonment ☐ Conversion to a Non-Injection Well

Provide a narrative description of the work planned to be performed, or that was performed. Use additional pages as necessary. See instructions.

A workover rig capable of performing the required abandonment operations at the required depths will be moved in and set up over the core hole. The core hole will be inspected to determine the depth to which the hole remains open and if any obstructions are present in the core hole; the presence and condition of any existing collar will also be documented. If necessary, the core hole will be cleaned out to a depth of at least 100 feet below the bedrock-LBFU contact to enable placement of cement seals.

If collar is present, an attempt will be made to remove it. If removal of the collar is not feasible, it will be left in the hole and perforated as needed to allow an annular seal to be placed to a depth of at least 25 feet bgs. In areas of agricultural use, the surface casing will be cut at least 5 feet bgs and removed.

If the collar cannot be removed, it will be perforated from at least 20 feet below the bedrock-LBFU contact to at least 20 feet above the contact; from at least 20 feet below the base of the MFGU to at least 20 feet above the top of the MFGU; and from at least 25 feet bgs to 5 feet bgs.

A tremie pipe will be used to place Type V cement in the open core hole from the bottom of the core hole to the top of the core hole. Cement retainers, as described above, will be used to force cement grout into the annulus and behind perforated intervals, as necessary.

If the hole has been obstructed, as much cement as possible will be placed from 100 feet below the LBFU-bedrock contact to the top of the core hole.

The volume of Type V cement will be recorded and will not be less than the estimated volume of material required to fill each interval. All cement grout will consist of Type V cement, or equivalent approved in accordance with the UIC Permit.

Certification

I certify under the penalty of law that I have personally examined and am familiar with the information submitted in this document and all attachments and that, based on my inquiry of those individuals immediately responsible for obtaining the information, I believe that the information is true, accurate, and complete. I am aware that there are significant penalties for submitting false information, including the possibliity of fine and imprisonment. (Ref. 40 CFR § 144.32)

Name and Official Title *(Please type or print)*	Signature	Date Signed
Dan Johnson, VP - General Manager		10/3/2019

INSTRUCTIONS FOR FORM 7520-19

This form replaces forms 7520-12 and 7520-14. Use this form only when work is planned or has occurred that affects the well's construction or operation as an injection well, including work on the casing, tubing or packer (or for shallow Class V wells, the subsurface fluid emplacement network). Use one form per injection well. While reports or other information developed by contractors or service companies may be attached, this form must be signed by a responsible entity as described at 40 CFR 144.32. Note: operators closing Class V wells should use Form 7520-17.

NAME, ADDRESS, PHONE AND/OR EMAIL OF PERMITTEE: Enter the name and street address, city/town, state, and ZIP code of the permittee. Also provide an email address (if available) and/or a phone number.

PERMIT OR EPA ID NUMBER: Enter the well identification number or permit number assigned to the well by the EPA or the permitting authority.

API NUMBER: Enter the number assigned by the local jurisdiction (usually a State Oil and Gas Agency) using the American Petroleum Institute standard numbering system.

FULL WELL NAME: Enter the full name of the well or project.

Enter the **STATE** and **COUNTY** where the well is located. For States that do not have counties, use the name of that State's equivalent jurisdiction at a more local level.

WELL LOCATION: Fill in the complete township, range, and section to the nearest quarter-quarter section. A township is north or south of the baseline, and a range is east or west of the principal meridian (e.g., T12N, R34W). Also include the distance, in feet, from the nearest north or south line and nearest east or west line of the quarter-section. Also, enter the **latitude** and **longitude** of the well in decimal degrees, to five or six places if possible; be sure to include a negative sign for the longitude of a well in the Western Hemisphere and a negative sign for the latitude of a well in the Southern Hemisphere.

Enter the **WELL CLASS,** i.e., the class of injection well as defined in 40 CFR 144.6.

TIMING OF THE ACTION: Check ***Notice prior to work*** if the activity has not yet occurred (i.e., is planned). Check ***Report after work*** if the activity described has already occurred. As appropriate, include the date the activity is expected to start or the date the activity was completed. (Note this may not be available, e.g., for a plugging plan submitted with a permit application.)

TYPE OF ACTION: Check the appropriate box to describe the kind of activity being reported. Check ***Well Rework*** for work that was/will be performed on the well after it has already been in operation as an injection well. Check ***Plugging and Abandonment*** to report on plans for or descriptions of final closure/plugging after use as an injection well. Check ***Conversion to a Non-Injection Well*** if the well is to be converted to something other than an injection well.

Provide a **NARRATIVE DESCRIPTION** of the work planned to be performed, or that was performed. The narrative should include a description of the main procedures planned or that occurred during the work activity. A service company report, daily report, or similar document may be attached if it includes all the requested information and is clear and legible.

For well reworks, include the following information: The reason for the well rework; depths of activity; type of activity; changes to injection well configuration, well casing, or cement behind casing; any plug added to the well and its depth; any newly drilled interval and its depth; method(s) to demonstrate that the well has mechanical integrity (as applicable); and any deviations from the approved rework plan (as applicable).

For a well plugging plan, include the following information: Reason for the well plugging; number of plugs placed, and their depths; materials used as plugs (e.g., cast iron bridge plug, cement, cement retainer); method to set plugs; and wait-on-cement times, if any. Also provide one or more cost estimates from an independent firm in the business of plugging and abandoning wells to plug the well as described in the plan.

For well plugging affidavit, include the following information: Reason for the well plugging; number of plugs placed, and their depths; materials used as plugs (e.g., cast iron bridge plug, cement, cement retainer); method to set plugs; wait-on-cement times, if any; and any deviations from the approved plugging plan (if applicable).

For conversion to a non-injection well, include the following information: Depths of activity; type of activity; changes to injection well configuration, well casing, or cement behind casing; any plug added to the well and its depth; any newly drilled interval and its depth; depths of new perforations; and method(s) to demonstrate that the well has mechanical integrity (as applicable).

For all of the above activities, include a well sketch depicting the work, results of well tests/logging performed, service company tickets, and any other available information demonstrating how the work was/is to be performed. Also, specify whether depths are below ground surface, relative to Kelly bushing, etc.

CERTIFICATION: This form must be signed and dated by either: a responsible corporate officer for a corporation, by a general partner for a partnership, by the proprietor of a sole proprietorship, or by a principal executive or ranking elected official for a public agency.

PAPERWORK REDUCTION ACT NOTICE: The public reporting and recordkeeping burden for this collection of information is estimated to average between 6.0 and 7.9 hours per response, depending on the injection well class. Burden means the total time, effort, or financial resource expended by persons to generate, maintain, retain, or disclose or provide information to or for a Federal Agency. This includes the time needed to review instructions; develop, acquire, install, and utilize technology and systems for the purposes of collecting, validating, and verifying information, processing and maintaining information, and disclosing and providing information; adjust the existing ways to comply with any previously applicable instructions and requirements; train personnel to be able to respond to the collection of information; search data sources; complete and review the collection of information; and, transmit or otherwise disclose the information. An agency may not conduct or sponsor, and a person is not required to respond to, a collection of information unless it displays a currently valid OMB control number. Send comments on the Agency's need for this information, the accuracy of the provided burden estimates, and any suggested methods for minimizing respondent burden, including the use of automated collection techniques to Director, Collection Strategies Division, U.S. Environmental Protection Agency (2822), 1200 Pennsylvania Ave., NW., Washington, D.C. 20460. Include the OMB control number in any correspondence. Do not send the completed forms to this address.

AS-BUILT COREHOLE 499MF

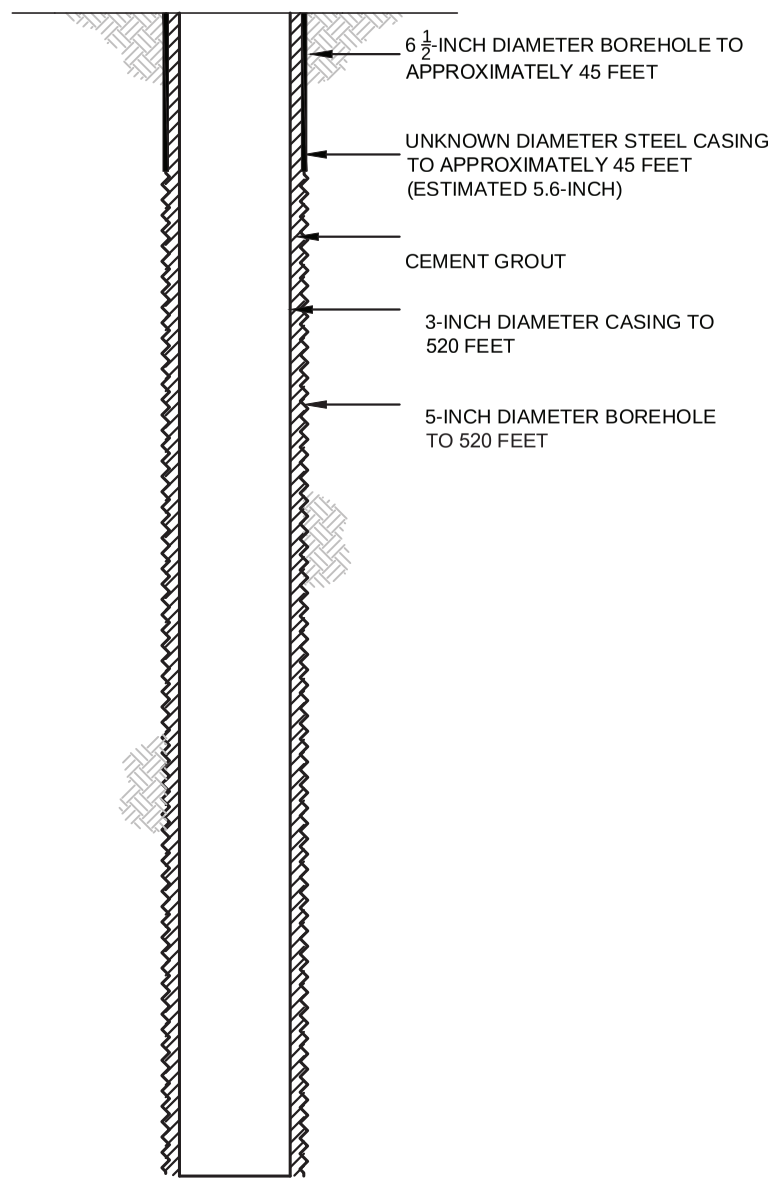

PROPOSED PLUGGING AND ABANDONMENT COREHOLE 499MF

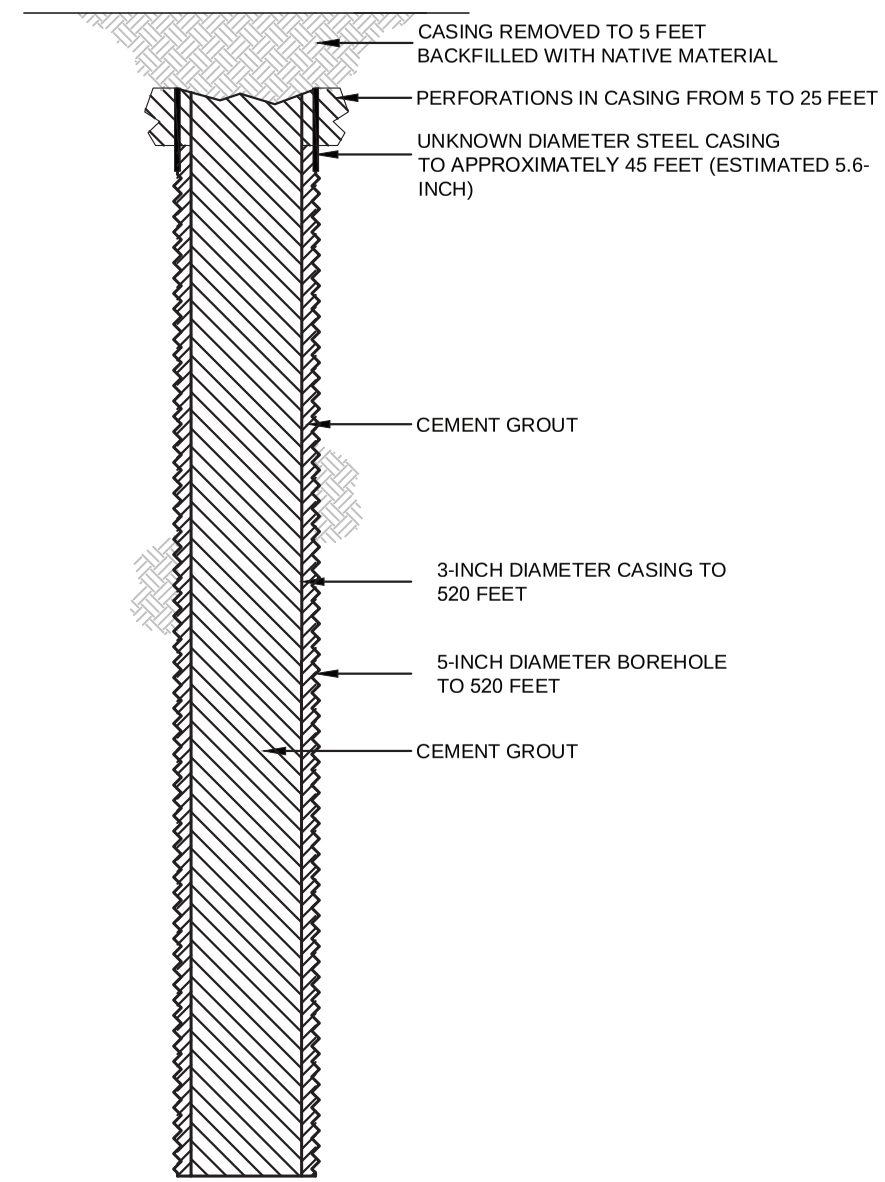

HALEY ALDRICH

FLORENCE COPPER, INC.
FLORENCE, ARIZONA

COREHOLE 499MF DIAGRAM

FLORENCE COPPER INC.

NOT TO SCALE
SEPTEMBER 2019

FIGURE 1

MOBINI, GITA Printed: 4/21/2017 12:13 PM Layout: ABANDON (2)
G:\PROJECTS\CURIS RESOURCES\38706-CURIS FEASIBILITY\DRAWINGS\EPA\WELL\ABANDON\448S_ABANDON.DWG

OMB No. 2040-0042 Approval Expires 4/30/2022

United States Environmental Protection Agency

EPA

WELL REWORK RECORD, PLUGGING AND ABANDONMENT PLAN, OR PLUGGING AND ABANDONMENT AFFIDAVIT

Name and Address, Phone Number and/or Email of Permittee

Florence Copper Project
1575 W Hunt Hwy,
Florence, AZ 85132

Permit or EPA ID Number	API Number	Full Well Name
R9UIC-AZ3-FY11-1		500MF

State	County
Arizona	Pinal

Locate well in two directions from nearest lines of quarter section and drilling unit

Latitude 33.04441239

Surface Location

NW **1/4 of** NW **1/4 of Section** 33 **Township** 4S **Range** 9E

Longitude -111.434265358

_____ **ft. from (N/S)** _____ **Line of quarter section**

_____ **ft. from (E/W)** _____ **Line of quarter section.**

Well Class	Timing of Action (pick one)	Type of Action (pick one)
☐ Class I ☐ Class II ☑ Class III ☐ Class V	☑ Notice Prior to Work Date Expected to Commence March 2021 ☐ Report After Work Date Work Ended	☐ Well Rework ☑ Plugging and Abandonment ☐ Conversion to a Non-Injection Well

Provide a narrative description of the work planned to be performed, or that was performed. Use additional pages as necessary. See instructions.

A workover rig capable of performing the required abandonment operations at the required depths will be moved in and set up over the core hole. The core hole will be inspected to determine the depth to which the hole remains open and if any obstructions are present in the core hole; the presence and condition of any existing collar will also be documented. If necessary, the core hole will be cleaned out to a depth of at least 100 feet below the bedrock-LBFU contact to enable placement of cement seals.

If collar is present, an attempt will be made to remove it. If removal of the collar is not feasible, it will be left in the hole and perforated as needed to allow an annular seal to be placed to a depth of at least 25 feet bgs. In areas of agricultural use, the surface casing will be cut at least 5 feet bgs and removed.

If the collar cannot be removed, it will be perforated from at least 20 feet below the bedrock-LBFU contact to at least 20 feet above the contact; from at least 20 feet below the base of the MFGU to at least 20 feet above the top of the MFGU; and from at least 25 feet bgs to 5 feet bgs.

A tremie pipe will be used to place Type V cement in the open core hole from the bottom of the core hole to the top of the core hole. Cement retainers, as described above, will be used to force cement grout into the annulus and behind perforated intervals, as necessary.

If the hole has been obstructed, as much cement as possible will be placed from 100 feet below the LBFU-bedrock contact to the top of the core hole.

The volume of Type V cement will be recorded and will not be less than the estimated volume of material required to fill each interval. All cement grout will consist of Type V cement, or equivalent approved in accordance with the UIC Permit.

Certification

I certify under the penalty of law that I have personally examined and am familiar with the information submitted in this document and all attachments and that, based on my inquiry of those individuals immediately responsible for obtaining the information, I believe that the information is true, accurate, and complete. I am aware that there are significant penalties for submitting false information, including the possibliity of fine and imprisonment. (Ref. 40 CFR § 144.32)

Name and Official Title *(Please type or print)*	Signature	Date Signed
Dan Johnson, VP - General Manager		10/3/2019

INSTRUCTIONS FOR FORM 7520-19

This form replaces forms 7520-12 and 7520-14. Use this form only when work is planned or has occurred that affects the well's construction or operation as an injection well, including work on the casing, tubing or packer (or for shallow Class V wells, the subsurface fluid emplacement network). Use one form per injection well. While reports or other information developed by contractors or service companies may be attached, this form must be signed by a responsible entity as described at 40 CFR 144.32. Note: operators closing Class V wells should use Form 7520-17.

NAME, ADDRESS, PHONE AND/OR EMAIL OF PERMITTEE: Enter the name and street address, city/town, state, and ZIP code of the permittee. Also provide an email address (if available) and/or a phone number.

PERMIT OR EPA ID NUMBER: Enter the well identification number or permit number assigned to the well by the EPA or the permitting authority.

API NUMBER: Enter the number assigned by the local jurisdiction (usually a State Oil and Gas Agency) using the American Petroleum Institute standard numbering system.

FULL WELL NAME: Enter the full name of the well or project.

Enter the **STATE** and **COUNTY** where the well is located. For States that do not have counties, use the name of that State's equivalent jurisdiction at a more local level.

WELL LOCATION: Fill in the complete township, range, and section to the nearest quarter-quarter section. A township is north or south of the baseline, and a range is east or west of the principal meridian (e.g., T12N, R34W). Also include the distance, in feet, from the nearest north or south line and nearest east or west line of the quarter-section. Also, enter the **latitude** and **longitude** of the well in decimal degrees, to five or six places if possible; be sure to include a negative sign for the longitude of a well in the Western Hemisphere and a negative sign for the latitude of a well in the Southern Hemisphere.

Enter the **WELL CLASS,** i.e., the class of injection well as defined in 40 CFR 144.6.

TIMING OF THE ACTION: Check ***Notice prior to work*** if the activity has not yet occurred (i.e., is planned). Check ***Report after work*** if the activity described has already occurred. As appropriate, include the date the activity is expected to start or the date the activity was completed. (Note this may not be available, e.g., for a plugging plan submitted with a permit application.)

TYPE OF ACTION: Check the appropriate box to describe the kind of activity being reported. Check ***Well Rework*** for work that was/will be performed on the well after it has already been in operation as an injection well. Check ***Plugging and Abandonment*** to report on plans for or descriptions of final closure/plugging after use as an injection well. Check ***Conversion to a Non-Injection Well*** if the well is to be converted to something other than an injection well.

Provide a **NARRATIVE DESCRIPTION** of the work planned to be performed, or that was performed. The narrative should include a description of the main procedures planned or that occurred during the work activity. A service company report, daily report, or similar document may be attached if it includes all the requested information and is clear and legible.

For well reworks, include the following information: The reason for the well rework; depths of activity; type of activity; changes to injection well configuration, well casing, or cement behind casing; any plug added to the well and its depth; any newly drilled interval and its depth; method(s) to demonstrate that the well has mechanical integrity (as applicable); and any deviations from the approved rework plan (as applicable).

For a well plugging plan, include the following information: Reason for the well plugging; number of plugs placed, and their depths; materials used as plugs (e.g., cast iron bridge plug, cement, cement retainer); method to set plugs; and wait-on-cement times, if any. Also provide one or more cost estimates from an independent firm in the business of plugging and abandoning wells to plug the well as described in the plan.

For well plugging affidavit, include the following information: Reason for the well plugging; number of plugs placed, and their depths; materials used as plugs (e.g., cast iron bridge plug, cement, cement retainer); method to set plugs; wait-on-cement times, if any; and any deviations from the approved plugging plan (if applicable).

For conversion to a non-injection well, include the following information: Depths of activity; type of activity; changes to injection well configuration, well casing, or cement behind casing; any plug added to the well and its depth; any newly drilled interval and its depth; depths of new perforations; and method(s) to demonstrate that the well has mechanical integrity (as applicable).

For all of the above activities, include a well sketch depicting the work, results of well tests/logging performed, service company tickets, and any other available information demonstrating how the work was/is to be performed. Also, specify whether depths are below ground surface, relative to Kelly bushing, etc.

CERTIFICATION: This form must be signed and dated by either: a responsible corporate officer for a corporation, by a general partner for a partnership, by the proprietor of a sole proprietorship, or by a principal executive or ranking elected official for a public agency.

PAPERWORK REDUCTION ACT NOTICE: The public reporting and recordkeeping burden for this collection of information is estimated to average between 6.0 and 7.9 hours per response, depending on the injection well class. Burden means the total time, effort, or financial resource expended by persons to generate, maintain, retain, or disclose or provide information to or for a Federal Agency. This includes the time needed to review instructions; develop, acquire, install, and utilize technology and systems for the purposes of collecting, validating, and verifying information, processing and maintaining information, and disclosing and providing information; adjust the existing ways to comply with any previously applicable instructions and requirements; train personnel to be able to respond to the collection of information; search data sources; complete and review the collection of information; and, transmit or otherwise disclose the information. An agency may not conduct or sponsor, and a person is not required to respond to, a collection of information unless it displays a currently valid OMB control number. Send comments on the Agency's need for this information, the accuracy of the provided burden estimates, and any suggested methods for minimizing respondent burden, including the use of automated collection techniques to Director, Collection Strategies Division, U.S. Environmental Protection Agency (2822), 1200 Pennsylvania Ave., NW., Washington, D.C. 20460. Include the OMB control number in any correspondence. Do not send the completed forms to this address.

AS-BUILT COREHOLE 500MF

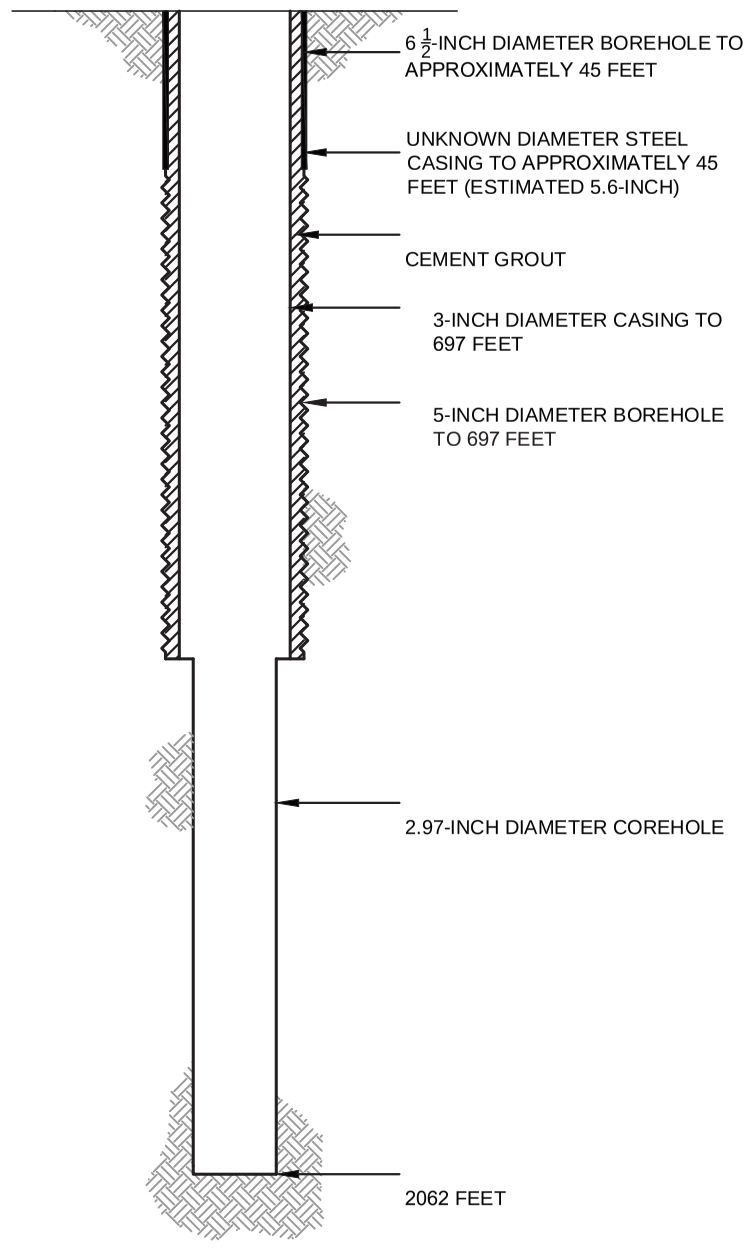

PROPOSED PLUGGING AND ABANDONMENT COREHOLE 500MF

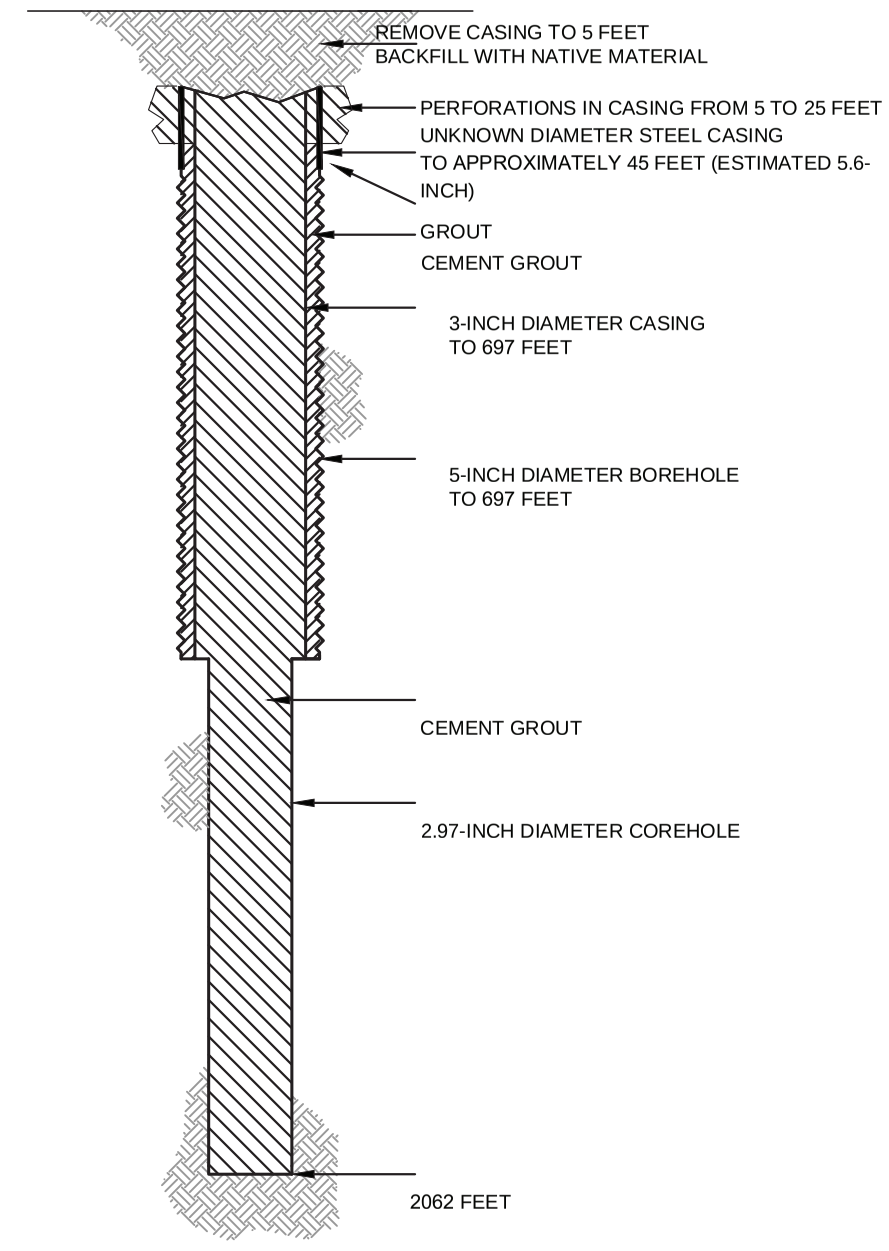

HALEY ALDRICH

FLORENCE COPPER, INC.
FLORENCE, ARIZONA

COREHOLE 500MF DIAGRAM

FLORENCE COPPER INC.

NOT TO SCALE
SEPTEMBER 2019

FIGURE 1

MOBINI, GITA Printed: 4/21/2017 12:00 PM Layout: ABANDON (2)
\PROJECTS\CURIS RESOURCES38706-CURIS FEASIBILITY\DRAWINGS\EPA\WELL ABANDON\415S_ABANDON.DWG

OMB No. 2040-0042 Approval Expires 4/30/2022

United States Environmental Protection Agency

WELL REWORK RECORD, PLUGGING AND ABANDONMENT PLAN, OR PLUGGING AND ABANDONMENT AFFIDAVIT

Name and Address, Phone Number and/or Email of Permittee

Florence Copper Project
1575 W Hunt Hwy,
Florence, AZ 85132

Permit or EPA ID Number	API Number	Full Well Name
R9UIC-AZ3-FY11-1		501MF

State	County
Arizona	Pinal

Locate well in two directions from nearest lines of quarter section and drilling unit

Latitude 33.04441554

Surface Location

NW **1/4 of** NW **1/4 of Section** 33 **Township** 4S **Range** 9E

Longitude -111.4350812

_____ **ft. from (N/S)** _____ **Line of quarter section**

_____ **ft. from (E/W)** _____ **Line of quarter section.**

Well Class	Timing of Action (pick one)	Type of Action (pick one)
☐ Class I ☐ Class II ☑ Class III ☐ Class V	☑ Notice Prior to Work Date Expected to Commence March 2021 ☐ Report After Work Date Work Ended	☐ Well Rework ☑ Plugging and Abandonment ☐ Conversion to a Non-Injection Well

Provide a narrative description of the work planned to be performed, or that was performed. Use additional pages as necessary. See instructions.

A workover rig capable of performing the required abandonment operations at the required depths will be moved in and set up over the core hole. The core hole will be inspected to determine the depth to which the hole remains open and if any obstructions are present in the core hole; the presence and condition of any existing collar will also be documented. If necessary, the core hole will be cleaned out to a depth of at least 100 feet below the bedrock-LBFU contact to enable placement of cement seals.

If collar is present, an attempt will be made to remove it. If removal of the collar is not feasible, it will be left in the hole and perforated as needed to allow an annular seal to be placed to a depth of at least 25 feet bgs. In areas of agricultural use, the surface casing will be cut at least 5 feet bgs and removed.

If the collar cannot be removed, it will be perforated from at least 20 feet below the bedrock-LBFU contact to at least 20 feet above the contact; from at least 20 feet below the base of the MFGU to at least 20 feet above the top of the MFGU; and from at least 25 feet bgs to 5 feet bgs.

A tremie pipe will be used to place Type V cement in the open core hole from the bottom of the core hole to the top of the core hole. Cement retainers, as described above, will be used to force cement grout into the annulus and behind perforated intervals, as necessary.

If the hole has been obstructed, as much cement as possible will be placed from 100 feet below the LBFU-bedrock contact to the top of the core hole.

The volume of Type V cement will be recorded and will not be less than the estimated volume of material required to fill each interval. All cement grout will consist of Type V cement, or equivalent approved in accordance with the UIC Permit.

Certification

I certify under the penalty of law that I have personally examined and am familiar with the information submitted in this document and all attachments and that, based on my inquiry of those individuals immediately responsible for obtaining the information, I believe that the information is true, accurate, and complete. I am aware that there are significant penalties for submitting false information, including the possibliity of fine and imprisonment. (Ref. 40 CFR § 144.32)

Name and Official Title *(Please type or print)*	Signature	Date Signed
Dan Johnson, VP - General Manager		10/3/2019

INSTRUCTIONS FOR FORM 7520-19

This form replaces forms 7520-12 and 7520-14. Use this form only when work is planned or has occurred that affects the well's construction or operation as an injection well, including work on the casing, tubing or packer (or for shallow Class V wells, the subsurface fluid emplacement network). Use one form per injection well. While reports or other information developed by contractors or service companies may be attached, this form must be signed by a responsible entity as described at 40 CFR 144.32. Note: operators closing Class V wells should use Form 7520-17.

NAME, ADDRESS, PHONE AND/OR EMAIL OF PERMITTEE: Enter the name and street address, city/town, state, and ZIP code of the permittee. Also provide an email address (if available) and/or a phone number.

PERMIT OR EPA ID NUMBER: Enter the well identification number or permit number assigned to the well by the EPA or the permitting authority.

API NUMBER: Enter the number assigned by the local jurisdiction (usually a State Oil and Gas Agency) using the American Petroleum Institute standard numbering system.

FULL WELL NAME: Enter the full name of the well or project.

Enter the **STATE** and **COUNTY** where the well is located. For States that do not have counties, use the name of that State's equivalent jurisdiction at a more local level.

WELL LOCATION: Fill in the complete township, range, and section to the nearest quarter-quarter section. A township is north or south of the baseline, and a range is east or west of the principal meridian (e.g., T12N, R34W). Also include the distance, in feet, from the nearest north or south line and nearest east or west line of the quarter-section. Also, enter the **latitude** and **longitude** of the well in decimal degrees, to five or six places if possible; be sure to include a negative sign for the longitude of a well in the Western Hemisphere and a negative sign for the latitude of a well in the Southern Hemisphere.

Enter the **WELL CLASS,** i.e., the class of injection well as defined in 40 CFR 144.6.

TIMING OF THE ACTION: Check ***Notice prior to work*** if the activity has not yet occurred (i.e., is planned). Check ***Report after work*** if the activity described has already occurred. As appropriate, include the date the activity is expected to start or the date the activity was completed. (Note this may not be available, e.g., for a plugging plan submitted with a permit application.)

TYPE OF ACTION: Check the appropriate box to describe the kind of activity being reported. Check ***Well Rework*** for work that was/will be performed on the well after it has already been in operation as an injection well. Check ***Plugging and Abandonment*** to report on plans for or descriptions of final closure/plugging after use as an injection well. Check ***Conversion to a Non-Injection Well*** if the well is to be converted to something other than an injection well.

Provide a **NARRATIVE DESCRIPTION** of the work planned to be performed, or that was performed. The narrative should include a description of the main procedures planned or that occurred during the work activity. A service company report, daily report, or similar document may be attached if it includes all the requested information and is clear and legible.

For well reworks, include the following information: The reason for the well rework; depths of activity; type of activity; changes to injection well configuration, well casing, or cement behind casing; any plug added to the well and its depth; any newly drilled interval and its depth; method(s) to demonstrate that the well has mechanical integrity (as applicable); and any deviations from the approved rework plan (as applicable).

For a well plugging plan, include the following information: Reason for the well plugging; number of plugs placed, and their depths; materials used as plugs (e.g., cast iron bridge plug, cement, cement retainer); method to set plugs; and wait-on-cement times, if any. Also provide one or more cost estimates from an independent firm in the business of plugging and abandoning wells to plug the well as described in the plan.

For well plugging affidavit, include the following information: Reason for the well plugging; number of plugs placed, and their depths; materials used as plugs (e.g., cast iron bridge plug, cement, cement retainer); method to set plugs; wait-on-cement times, if any; and any deviations from the approved plugging plan (if applicable).

For conversion to a non-injection well, include the following information: Depths of activity; type of activity; changes to injection well configuration, well casing, or cement behind casing; any plug added to the well and its depth; any newly drilled interval and its depth; depths of new perforations; and method(s) to demonstrate that the well has mechanical integrity (as applicable).

For all of the above activities, include a well sketch depicting the work, results of well tests/logging performed, service company tickets, and any other available information demonstrating how the work was/is to be performed. Also, specify whether depths are below ground surface, relative to Kelly bushing, etc.

CERTIFICATION: This form must be signed and dated by either: a responsible corporate officer for a corporation, by a general partner for a partnership, by the proprietor of a sole proprietorship, or by a principal executive or ranking elected official for a public agency.

PAPERWORK REDUCTION ACT NOTICE: The public reporting and recordkeeping burden for this collection of information is estimated to average between 6.0 and 7.9 hours per response, depending on the injection well class. Burden means the total time, effort, or financial resource expended by persons to generate, maintain, retain, or disclose or provide information to or for a Federal Agency. This includes the time needed to review instructions; develop, acquire, install, and utilize technology and systems for the purposes of collecting, validating, and verifying information, processing and maintaining information, and disclosing and providing information; adjust the existing ways to comply with any previously applicable instructions and requirements; train personnel to be able to respond to the collection of information; search data sources; complete and review the collection of information; and, transmit or otherwise disclose the information. An agency may not conduct or sponsor, and a person is not required to respond to, a collection of information unless it displays a currently valid OMB control number. Send comments on the Agency's need for this information, the accuracy of the provided burden estimates, and any suggested methods for minimizing respondent burden, including the use of automated collection techniques to Director, Collection Strategies Division, U.S. Environmental Protection Agency (2822), 1200 Pennsylvania Ave., NW., Washington, D.C. 20460. Include the OMB control number in any correspondence. Do not send the completed forms to this address.

OMB No. 2040-0042 Approval Expires 4/30/2022

United States Environmental Protection Agency

EPA

WELL REWORK RECORD, PLUGGING AND ABANDONMENT PLAN, OR PLUGGING AND ABANDONMENT AFFIDAVIT

Name and Address, Phone Number and/or Email of Permittee

Florence Copper Project
1575 W Hunt Hwy,
Florence, AZ 85132

Permit or EPA ID Number	API Number	Full Well Name
R9UIC-AZ3-FY11-1		502MF

State	County
Arizona	Pinal

Locate well in two directions from nearest lines of quarter section and drilling unit

Surface Location

NW 1/4 of NW 1/4 of Section 33 Township 4S Range 9E

Latitude 33.04441869

Longitude -111.435897

_____ ft. from (N/S) _____ Line of quarter section

_____ ft. from (E/W) _____ Line of quarter section.

Well Class	Timing of Action (pick one)	Type of Action (pick one)
☐ Class I ☐ Class II ☑ Class III ☐ Class V	☑ Notice Prior to Work Date Expected to Commence March 2021 ☐ Report After Work Date Work Ended	☐ Well Rework ☑ Plugging and Abandonment ☐ Conversion to a Non-Injection Well

Provide a narrative description of the work planned to be performed, or that was performed. Use additional pages as necessary. See instructions.

A workover rig capable of performing the required abandonment operations at the required depths will be moved in and set up over the core hole. The core hole will be inspected to determine the depth to which the hole remains open and if any obstructions are present in the core hole; the presence and condition of any existing collar will also be documented. If necessary, the core hole will be cleaned out to a depth of at least 100 feet below the bedrock-LBFU contact to enable placement of cement seals.

If collar is present, an attempt will be made to remove it. If removal of the collar is not feasible, it will be left in the hole and perforated as needed to allow an annular seal to be placed to a depth of at least 25 feet bgs. In areas of agricultural use, the surface casing will be cut at least 5 feet bgs and removed.

If the collar cannot be removed, it will be perforated from at least 20 feet below the bedrock-LBFU contact to at least 20 feet above the contact; from at least 20 feet below the base of the MFGU to at least 20 feet above the top of the MFGU; and from at least 25 feet bgs to 5 feet bgs.

A tremie pipe will be used to place Type V cement in the open core hole from the bottom of the core hole to the top of the core hole. Cement retainers, as described above, will be used to force cement grout into the annulus and behind perforated intervals, as necessary.

If the hole has been obstructed, as much cement as possible will be placed from 100 feet below the LBFU-bedrock contact to the top of the core hole.

The volume of Type V cement will be recorded and will not be less than the estimated volume of material required to fill each interval. All cement grout will consist of Type V cement, or equivalent approved in accordance with the UIC Permit.

Certification

I certify under the penalty of law that I have personally examined and am familiar with the information submitted in this document and all attachments and that, based on my inquiry of those individuals immediately responsible for obtaining the information, I believe that the information is true, accurate, and complete. I am aware that there are significant penalties for submitting false information, including the possibliity of fine and imprisonment. (Ref. 40 CFR § 144.32)

Name and Official Title *(Please type or print)*	Signature	Date Signed
Dan Johnson, VP - General Manager		10/3/2019

INSTRUCTIONS FOR FORM 7520-19

This form replaces forms 7520-12 and 7520-14. Use this form only when work is planned or has occurred that affects the well's construction or operation as an injection well, including work on the casing, tubing or packer (or for shallow Class V wells, the subsurface fluid emplacement network). Use one form per injection well. While reports or other information developed by contractors or service companies may be attached, this form must be signed by a responsible entity as described at 40 CFR 144.32. Note: operators closing Class V wells should use Form 7520-17.

NAME, ADDRESS, PHONE AND/OR EMAIL OF PERMITTEE: Enter the name and street address, city/town, state, and ZIP code of the permittee. Also provide an email address (if available) and/or a phone number.

PERMIT OR EPA ID NUMBER: Enter the well identification number or permit number assigned to the well by the EPA or the permitting authority.

API NUMBER: Enter the number assigned by the local jurisdiction (usually a State Oil and Gas Agency) using the American Petroleum Institute standard numbering system.

FULL WELL NAME: Enter the full name of the well or project.

Enter the **STATE** and **COUNTY** where the well is located. For States that do not have counties, use the name of that State's equivalent jurisdiction at a more local level.

WELL LOCATION: Fill in the complete township, range, and section to the nearest quarter-quarter section. A township is north or south of the baseline, and a range is east or west of the principal meridian (e.g., T12N, R34W). Also include the distance, in feet, from the nearest north or south line and nearest east or west line of the quarter-section. Also, enter the **latitude** and **longitude** of the well in decimal degrees, to five or six places if possible; be sure to include a negative sign for the longitude of a well in the Western Hemisphere and a negative sign for the latitude of a well in the Southern Hemisphere.

Enter the **WELL CLASS,** i.e., the class of injection well as defined in 40 CFR 144.6.

TIMING OF THE ACTION: Check ***Notice prior to work*** if the activity has not yet occurred (i.e., is planned). Check ***Report after work*** if the activity described has already occurred. As appropriate, include the date the activity is expected to start or the date the activity was completed. (Note this may not be available, e.g., for a plugging plan submitted with a permit application.)

TYPE OF ACTION: Check the appropriate box to describe the kind of activity being reported. Check ***Well Rework*** for work that was/will be performed on the well after it has already been in operation as an injection well. Check ***Plugging and Abandonment*** to report on plans for or descriptions of final closure/plugging after use as an injection well. Check ***Conversion to a Non-Injection Well*** if the well is to be converted to something other than an injection well.

Provide a **NARRATIVE DESCRIPTION** of the work planned to be performed, or that was performed. The narrative should include a description of the main procedures planned or that occurred during the work activity. A service company report, daily report, or similar document may be attached if it includes all the requested information and is clear and legible.

For well reworks, include the following information: The reason for the well rework; depths of activity; type of activity; changes to injection well configuration, well casing, or cement behind casing; any plug added to the well and its depth; any newly drilled interval and its depth; method(s) to demonstrate that the well has mechanical integrity (as applicable); and any deviations from the approved rework plan (as applicable).

For a well plugging plan, include the following information: Reason for the well plugging; number of plugs placed, and their depths; materials used as plugs (e.g., cast iron bridge plug, cement, cement retainer); method to set plugs; and wait-on-cement times, if any. Also provide one or more cost estimates from an independent firm in the business of plugging and abandoning wells to plug the well as described in the plan.

For well plugging affidavit, include the following information: Reason for the well plugging; number of plugs placed, and their depths; materials used as plugs (e.g., cast iron bridge plug, cement, cement retainer); method to set plugs; wait-on-cement times, if any; and any deviations from the approved plugging plan (if applicable).

For conversion to a non-injection well, include the following information: Depths of activity; type of activity; changes to injection well configuration, well casing, or cement behind casing; any plug added to the well and its depth; any newly drilled interval and its depth; depths of new perforations; and method(s) to demonstrate that the well has mechanical integrity (as applicable).

For all of the above activities, include a well sketch depicting the work, results of well tests/logging performed, service company tickets, and any other available information demonstrating how the work was/is to be performed. Also, specify whether depths are below ground surface, relative to Kelly bushing, etc.

CERTIFICATION: This form must be signed and dated by either: a responsible corporate officer for a corporation, by a general partner for a partnership, by the proprietor of a sole proprietorship, or by a principal executive or ranking elected official for a public agency.

PAPERWORK REDUCTION ACT NOTICE: The public reporting and recordkeeping burden for this collection of information is estimated to average between 6.0 and 7.9 hours per response, depending on the injection well class. Burden means the total time, effort, or financial resource expended by persons to generate, maintain, retain, or disclose or provide information to or for a Federal Agency. This includes the time needed to review instructions; develop, acquire, install, and utilize technology and systems for the purposes of collecting, validating, and verifying information, processing and maintaining information, and disclosing and providing information; adjust the existing ways to comply with any previously applicable instructions and requirements; train personnel to be able to respond to the collection of information; search data sources; complete and review the collection of information; and, transmit or otherwise disclose the information. An agency may not conduct or sponsor, and a person is not required to respond to, a collection of information unless it displays a currently valid OMB control number. Send comments on the Agency's need for this information, the accuracy of the provided burden estimates, and any suggested methods for minimizing respondent burden, including the use of automated collection techniques to Director, Collection Strategies Division, U.S. Environmental Protection Agency (2822), 1200 Pennsylvania Ave., NW., Washington, D.C. 20460. Include the OMB control number in any correspondence. Do not send the completed forms to this address.

AS-BUILT COREHOLE 502MF

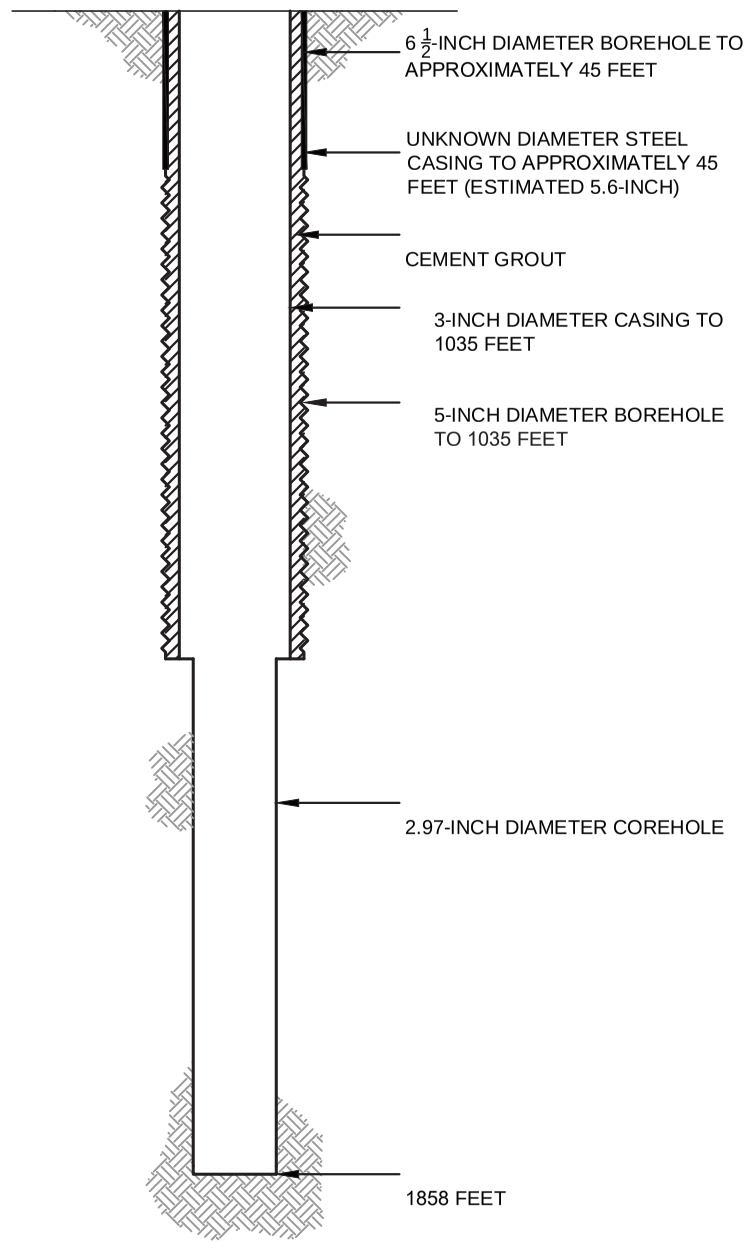

PROPOSED PLUGGING AND ABANDONMENT COREHOLE 502MF

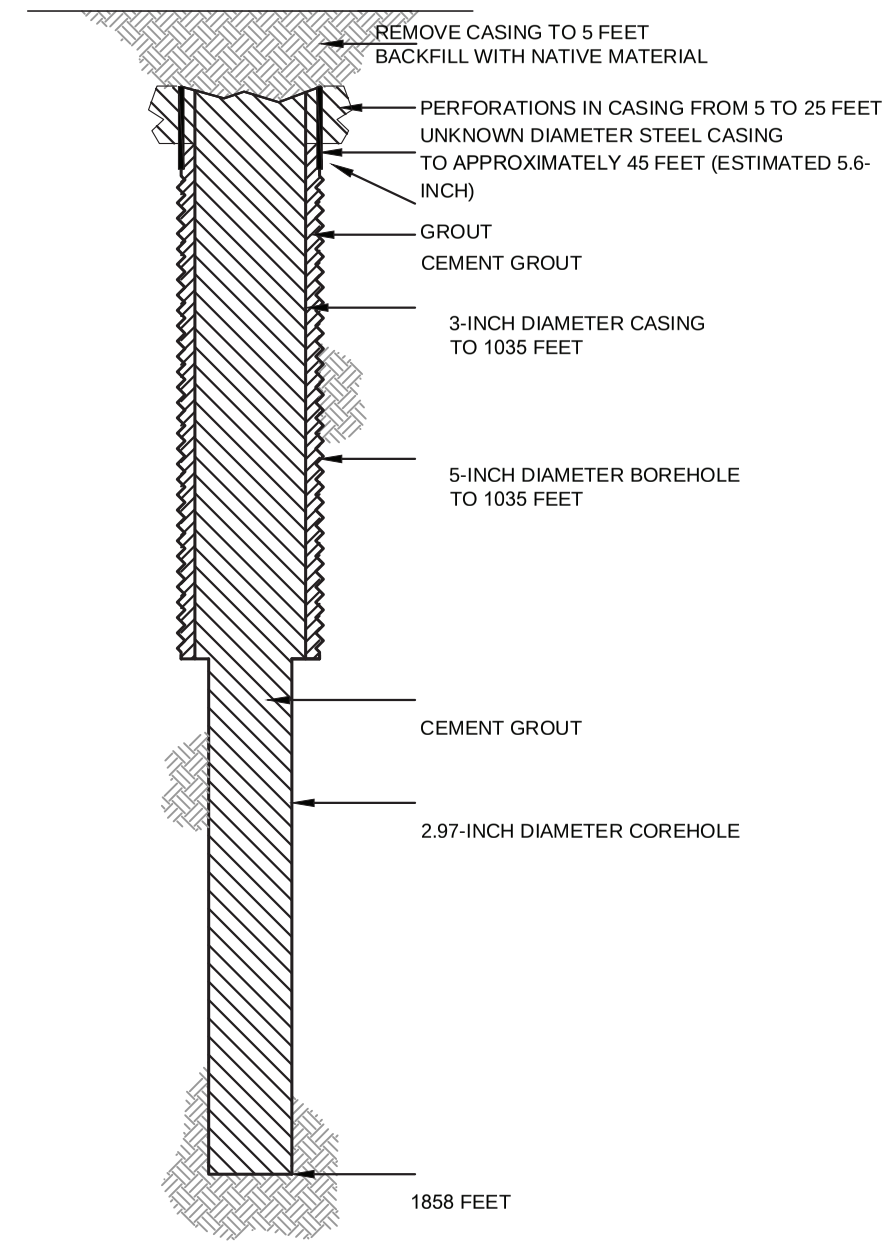

HALEY ALDRICH

FLORENCE COPPER, INC.
FLORENCE, ARIZONA

COREHOLE 502MF DIAGRAM

FLORENCE COPPER INC.

NOT TO SCALE
SEPTEMBER 2019

FIGURE 1

MOBINI, GITA Printed: 4/21/2017 12:00 PM Layout: ABANDON (2)
\PROJECTS\CURIS RESOURCES38706-CURIS FEASIBILITY\DRAWINGS\EPA\WELL ABANDON\415S_ABANDON.DWG

OMB No. 2040-0042 Approval Expires 4/30/2022

United States Environmental Protection Agency

WELL REWORK RECORD, PLUGGING AND ABANDONMENT PLAN, OR PLUGGING AND ABANDONMENT AFFIDAVIT

Name and Address, Phone Number and/or Email of Permittee

Florence Copper Project
1575 W Hunt Hwy,
Florence, AZ 85132

Permit or EPA ID Number	API Number	Full Well Name
R9UIC-AZ3-FY11-1		503MF

State	County
Arizona	Pinal

Locate well in two directions from nearest lines of quarter section and drilling unit

Latitude 33.04382205

Longitude -111.4354923

Surface Location

NW **1/4 of** NW **1/4 of Section** 33 **Township** 4S **Range** 9E

_____ **ft. from (N/S)** _____ **Line of quarter section**

_____ **ft. from (E/W)** _____ **Line of quarter section.**

Well Class	Timing of Action (pick one)	Type of Action (pick one)
☐ Class I ☐ Class II ☑ Class III ☐ Class V	☑ Notice Prior to Work Date Expected to Commence March 2021 ☐ Report After Work Date Work Ended	☐ Well Rework ☑ Plugging and Abandonment ☐ Conversion to a Non-Injection Well

Provide a narrative description of the work planned to be performed, or that was performed. Use additional pages as necessary. See instructions.

A workover rig capable of performing the required abandonment operations at the required depths will be moved in and set up over the core hole. The core hole will be inspected to determine the depth to which the hole remains open and if any obstructions are present in the core hole; the presence and condition of any existing collar will also be documented. If necessary, the core hole will be cleaned out to a depth of at least 100 feet below the bedrock-LBFU contact to enable placement of cement seals.

If collar is present, an attempt will be made to remove it. If removal of the collar is not feasible, it will be left in the hole and perforated as needed to allow an annular seal to be placed to a depth of at least 25 feet bgs. In areas of agricultural use, the surface casing will be cut at least 5 feet bgs and removed.

If the collar cannot be removed, it will be perforated from at least 20 feet below the bedrock-LBFU contact to at least 20 feet above the contact; from at least 20 feet below the base of the MFGU to at least 20 feet above the top of the MFGU; and from at least 25 feet bgs to 5 feet bgs.

A tremie pipe will be used to place Type V cement in the open core hole from the bottom of the core hole to the top of the core hole. Cement retainers, as described above, will be used to force cement grout into the annulus and behind perforated intervals, as necessary.

If the hole has been obstructed, as much cement as possible will be placed from 100 feet below the LBFU-bedrock contact to the top of the core hole.

The volume of Type V cement will be recorded and will not be less than the estimated volume of material required to fill each interval. All cement grout will consist of Type V cement, or equivalent approved in accordance with the UIC Permit.

Certification

I certify under the penalty of law that I have personally examined and am familiar with the information submitted in this document and all attachments and that, based on my inquiry of those individuals immediately responsible for obtaining the information, I believe that the information is true, accurate, and complete. I am aware that there are significant penalties for submitting false information, including the possibliity of fine and imprisonment. (Ref. 40 CFR § 144.32)

Name and Official Title *(Please type or print)*	Signature	Date Signed
Dan Johnson, VP - General Manager		10/3/2019

INSTRUCTIONS FOR FORM 7520-19

This form replaces forms 7520-12 and 7520-14. Use this form only when work is planned or has occurred that affects the well's construction or operation as an injection well, including work on the casing, tubing or packer (or for shallow Class V wells, the subsurface fluid emplacement network). Use one form per injection well. While reports or other information developed by contractors or service companies may be attached, this form must be signed by a responsible entity as described at 40 CFR 144.32. Note: operators closing Class V wells should use Form 7520-17.

NAME, ADDRESS, PHONE AND/OR EMAIL OF PERMITTEE: Enter the name and street address, city/town, state, and ZIP code of the permittee. Also provide an email address (if available) and/or a phone number.

PERMIT OR EPA ID NUMBER: Enter the well identification number or permit number assigned to the well by the EPA or the permitting authority.

API NUMBER: Enter the number assigned by the local jurisdiction (usually a State Oil and Gas Agency) using the American Petroleum Institute standard numbering system.

FULL WELL NAME: Enter the full name of the well or project.

Enter the **STATE** and **COUNTY** where the well is located. For States that do not have counties, use the name of that State's equivalent jurisdiction at a more local level.

WELL LOCATION: Fill in the complete township, range, and section to the nearest quarter-quarter section. A township is north or south of the baseline, and a range is east or west of the principal meridian (e.g., T12N, R34W). Also include the distance, in feet, from the nearest north or south line and nearest east or west line of the quarter-section. Also, enter the **latitude** and **longitude** of the well in decimal degrees, to five or six places if possible; be sure to include a negative sign for the longitude of a well in the Western Hemisphere and a negative sign for the latitude of a well in the Southern Hemisphere.

Enter the **WELL CLASS,** i.e., the class of injection well as defined in 40 CFR 144.6.

TIMING OF THE ACTION: Check ***Notice prior to work*** if the activity has not yet occurred (i.e., is planned). Check ***Report after work*** if the activity described has already occurred. As appropriate, include the date the activity is expected to start or the date the activity was completed. (Note this may not be available, e.g., for a plugging plan submitted with a permit application.)

TYPE OF ACTION: Check the appropriate box to describe the kind of activity being reported. Check ***Well Rework*** for work that was/will be performed on the well after it has already been in operation as an injection well. Check ***Plugging and Abandonment*** to report on plans for or descriptions of final closure/plugging after use as an injection well. Check ***Conversion to a Non-Injection Well*** if the well is to be converted to something other than an injection well.

Provide a **NARRATIVE DESCRIPTION** of the work planned to be performed, or that was performed. The narrative should include a description of the main procedures planned or that occurred during the work activity. A service company report, daily report, or similar document may be attached if it includes all the requested information and is clear and legible.

For well reworks, include the following information: The reason for the well rework; depths of activity; type of activity; changes to injection well configuration, well casing, or cement behind casing; any plug added to the well and its depth; any newly drilled interval and its depth; method(s) to demonstrate that the well has mechanical integrity (as applicable); and any deviations from the approved rework plan (as applicable).

For a well plugging plan, include the following information: Reason for the well plugging; number of plugs placed, and their depths; materials used as plugs (e.g., cast iron bridge plug, cement, cement retainer); method to set plugs; and wait-on-cement times, if any. Also provide one or more cost estimates from an independent firm in the business of plugging and abandoning wells to plug the well as described in the plan.

For well plugging affidavit, include the following information: Reason for the well plugging; number of plugs placed, and their depths; materials used as plugs (e.g., cast iron bridge plug, cement, cement retainer); method to set plugs; wait-on-cement times, if any; and any deviations from the approved plugging plan (if applicable).

For conversion to a non-injection well, include the following information: Depths of activity; type of activity; changes to injection well configuration, well casing, or cement behind casing; any plug added to the well and its depth; any newly drilled interval and its depth; depths of new perforations; and method(s) to demonstrate that the well has mechanical integrity (as applicable).

For all of the above activities, include a well sketch depicting the work, results of well tests/logging performed, service company tickets, and any other available information demonstrating how the work was/is to be performed. Also, specify whether depths are below ground surface, relative to Kelly bushing, etc.

CERTIFICATION: This form must be signed and dated by either: a responsible corporate officer for a corporation, by a general partner for a partnership, by the proprietor of a sole proprietorship, or by a principal executive or ranking elected official for a public agency.

PAPERWORK REDUCTION ACT NOTICE: The public reporting and recordkeeping burden for this collection of information is estimated to average between 6.0 and 7.9 hours per response, depending on the injection well class. Burden means the total time, effort, or financial resource expended by persons to generate, maintain, retain, or disclose or provide information to or for a Federal Agency. This includes the time needed to review instructions; develop, acquire, install, and utilize technology and systems for the purposes of collecting, validating, and verifying information, processing and maintaining information, and disclosing and providing information; adjust the existing ways to comply with any previously applicable instructions and requirements; train personnel to be able to respond to the collection of information; search data sources; complete and review the collection of information; and, transmit or otherwise disclose the information. An agency may not conduct or sponsor, and a person is not required to respond to, a collection of information unless it displays a currently valid OMB control number. Send comments on the Agency's need for this information, the accuracy of the provided burden estimates, and any suggested methods for minimizing respondent burden, including the use of automated collection techniques to Director, Collection Strategies Division, U.S. Environmental Protection Agency (2822), 1200 Pennsylvania Ave., NW., Washington, D.C. 20460. Include the OMB control number in any correspondence. Do not send the completed forms to this address.

OMB No. 2040-0042 Approval Expires 4/30/2022

United States Environmental Protection Agency

WELL REWORK RECORD, PLUGGING AND ABANDONMENT PLAN, OR PLUGGING AND ABANDONMENT AFFIDAVIT

Name and Address, Phone Number and/or Email of Permittee

Florence Copper Project
1575 W Hunt Hwy,
Florence, AZ 85132

Permit or EPA ID Number	API Number	Full Well Name
R9UIC-AZ3-FY11-1		504MF

State	County
Arizona	Pinal

Locate well in two directions from nearest lines of quarter section and drilling unit

Surface Location

NE 1/4 of NW 1/4 of Section 33 Township 4S Range 9E

Latitude 33.04381575

Longitude -111.4338607

_____ ft. from (N/S) _____ Line of quarter section

_____ ft. from (E/W) _____ Line of quarter section.

Well Class	Timing of Action (pick one)	Type of Action (pick one)
☐ Class I ☐ Class II ☑ Class III ☐ Class V	☑ Notice Prior to Work Date Expected to Commence March 2021 ☐ Report After Work Date Work Ended	☐ Well Rework ☑ Plugging and Abandonment ☐ Conversion to a Non-Injection Well

Provide a narrative description of the work planned to be performed, or that was performed. Use additional pages as necessary. See instructions.

A workover rig capable of performing the required abandonment operations at the required depths will be moved in and set up over the core hole. The core hole will be inspected to determine the depth to which the hole remains open and if any obstructions are present in the core hole; the presence and condition of any existing collar will also be documented. If necessary, the core hole will be cleaned out to a depth of at least 100 feet below the bedrock-LBFU contact to enable placement of cement seals.

If collar is present, an attempt will be made to remove it. If removal of the collar is not feasible, it will be left in the hole and perforated as needed to allow an annular seal to be placed to a depth of at least 25 feet bgs. In areas of agricultural use, the surface casing will be cut at least 5 feet bgs and removed.

If the collar cannot be removed, it will be perforated from at least 20 feet below the bedrock-LBFU contact to at least 20 feet above the contact; from at least 20 feet below the base of the MFGU to at least 20 feet above the top of the MFGU; and from at least 25 feet bgs to 5 feet bgs.

A tremie pipe will be used to place Type V cement in the open core hole from the bottom of the core hole to the top of the core hole. Cement retainers, as described above, will be used to force cement grout into the annulus and behind perforated intervals, as necessary.

If the hole has been obstructed, as much cement as possible will be placed from 100 feet below the LBFU-bedrock contact to the top of the core hole.

The volume of Type V cement will be recorded and will not be less than the estimated volume of material required to fill each interval. All cement grout will consist of Type V cement, or equivalent approved in accordance with the UIC Permit.

Certification

I certify under the penalty of law that I have personally examined and am familiar with the information submitted in this document and all attachments and that, based on my inquiry of those individuals immediately responsible for obtaining the information, I believe that the information is true, accurate, and complete. I am aware that there are significant penalties for submitting false information, including the possibliity of fine and imprisonment. (Ref. 40 CFR § 144.32)

Name and Official Title *(Please type or print)*	Signature	Date Signed
Dan Johnson, VP - General Manager		10/3/2019

INSTRUCTIONS FOR FORM 7520-19

This form replaces forms 7520-12 and 7520-14. Use this form only when work is planned or has occurred that affects the well's construction or operation as an injection well, including work on the casing, tubing or packer (or for shallow Class V wells, the subsurface fluid emplacement network). Use one form per injection well. While reports or other information developed by contractors or service companies may be attached, this form must be signed by a responsible entity as described at 40 CFR 144.32. Note: operators closing Class V wells should use Form 7520-17.

NAME, ADDRESS, PHONE AND/OR EMAIL OF PERMITTEE: Enter the name and street address, city/town, state, and ZIP code of the permittee. Also provide an email address (if available) and/or a phone number.

PERMIT OR EPA ID NUMBER: Enter the well identification number or permit number assigned to the well by the EPA or the permitting authority.

API NUMBER: Enter the number assigned by the local jurisdiction (usually a State Oil and Gas Agency) using the American Petroleum Institute standard numbering system.

FULL WELL NAME: Enter the full name of the well or project.

Enter the **STATE** and **COUNTY** where the well is located. For States that do not have counties, use the name of that State's equivalent jurisdiction at a more local level.

WELL LOCATION: Fill in the complete township, range, and section to the nearest quarter-quarter section. A township is north or south of the baseline, and a range is east or west of the principal meridian (e.g., T12N, R34W). Also include the distance, in feet, from the nearest north or south line and nearest east or west line of the quarter-section. Also, enter the **latitude** and **longitude** of the well in decimal degrees, to five or six places if possible; be sure to include a negative sign for the longitude of a well in the Western Hemisphere and a negative sign for the latitude of a well in the Southern Hemisphere.

Enter the **WELL CLASS,** i.e., the class of injection well as defined in 40 CFR 144.6.

TIMING OF THE ACTION: Check ***Notice prior to work*** if the activity has not yet occurred (i.e., is planned). Check ***Report after work*** if the activity described has already occurred. As appropriate, include the date the activity is expected to start or the date the activity was completed. (Note this may not be available, e.g., for a plugging plan submitted with a permit application.)

TYPE OF ACTION: Check the appropriate box to describe the kind of activity being reported. Check ***Well Rework*** for work that was/will be performed on the well after it has already been in operation as an injection well. Check ***Plugging and Abandonment*** to report on plans for or descriptions of final closure/plugging after use as an injection well. Check ***Conversion to a Non-Injection Well*** if the well is to be converted to something other than an injection well.

Provide a **NARRATIVE DESCRIPTION** of the work planned to be performed, or that was performed. The narrative should include a description of the main procedures planned or that occurred during the work activity. A service company report, daily report, or similar document may be attached if it includes all the requested information and is clear and legible.

For well reworks, include the following information: The reason for the well rework; depths of activity; type of activity; changes to injection well configuration, well casing, or cement behind casing; any plug added to the well and its depth; any newly drilled interval and its depth; method(s) to demonstrate that the well has mechanical integrity (as applicable); and any deviations from the approved rework plan (as applicable).

For a well plugging plan, include the following information: Reason for the well plugging; number of plugs placed, and their depths; materials used as plugs (e.g., cast iron bridge plug, cement, cement retainer); method to set plugs; and wait-on-cement times, if any. Also provide one or more cost estimates from an independent firm in the business of plugging and abandoning wells to plug the well as described in the plan.

For well plugging affidavit, include the following information: Reason for the well plugging; number of plugs placed, and their depths; materials used as plugs (e.g., cast iron bridge plug, cement, cement retainer); method to set plugs; wait-on-cement times, if any; and any deviations from the approved plugging plan (if applicable).

For conversion to a non-injection well, include the following information: Depths of activity; type of activity; changes to injection well configuration, well casing, or cement behind casing; any plug added to the well and its depth; any newly drilled interval and its depth; depths of new perforations; and method(s) to demonstrate that the well has mechanical integrity (as applicable).

For all of the above activities, include a well sketch depicting the work, results of well tests/logging performed, service company tickets, and any other available information demonstrating how the work was/is to be performed. Also, specify whether depths are below ground surface, relative to Kelly bushing, etc.

CERTIFICATION: This form must be signed and dated by either: a responsible corporate officer for a corporation, by a general partner for a partnership, by the proprietor of a sole proprietorship, or by a principal executive or ranking elected official for a public agency.

PAPERWORK REDUCTION ACT NOTICE: The public reporting and recordkeeping burden for this collection of information is estimated to average between 6.0 and 7.9 hours per response, depending on the injection well class. Burden means the total time, effort, or financial resource expended by persons to generate, maintain, retain, or disclose or provide information to or for a Federal Agency. This includes the time needed to review instructions; develop, acquire, install, and utilize technology and systems for the purposes of collecting, validating, and verifying information, processing and maintaining information, and disclosing and providing information; adjust the existing ways to comply with any previously applicable instructions and requirements; train personnel to be able to respond to the collection of information; search data sources; complete and review the collection of information; and, transmit or otherwise disclose the information. An agency may not conduct or sponsor, and a person is not required to respond to, a collection of information unless it displays a currently valid OMB control number. Send comments on the Agency's need for this information, the accuracy of the provided burden estimates, and any suggested methods for minimizing respondent burden, including the use of automated collection techniques to Director, Collection Strategies Division, U.S. Environmental Protection Agency (2822), 1200 Pennsylvania Ave., NW., Washington, D.C. 20460. Include the OMB control number in any correspondence. Do not send the completed forms to this address.

OMB No. 2040-0042 Approval Expires 4/30/2022

United States Environmental Protection Agency

WELL REWORK RECORD, PLUGGING AND ABANDONMENT PLAN, OR PLUGGING AND ABANDONMENT AFFIDAVIT

Name and Address, Phone Number and/or Email of Permittee

Florence Copper Project
1575 W Hunt Hwy,
Florence, AZ 85132

Permit or EPA ID Number	API Number	Full Well Name
R9UIC-AZ3-FY11-1		505MF

State	County
Arizona	Pinal

Locate well in two directions from nearest lines of quarter section and drilling unit

Latitude 33.04380942

Surface Location

NE **1/4 of** NW **1/4 of Section** 33 **Township** 4S **Range** 9E

Longitude -111.432229

_____ **ft. from (N/S)** _____ **Line of quarter section**

_____ **ft. from (E/W)** _____ **Line of quarter section.**

Well Class	Timing of Action (pick one)	Type of Action (pick one)
☐ Class I ☐ Class II ☑ Class III ☐ Class V	☑ Notice Prior to Work Date Expected to Commence March 2021 ☐ Report After Work Date Work Ended	☐ Well Rework ☑ Plugging and Abandonment ☐ Conversion to a Non-Injection Well

Provide a narrative description of the work planned to be performed, or that was performed. Use additional pages as necessary. See instructions.

A workover rig capable of performing the required abandonment operations at the required depths will be moved in and set up over the core hole. The core hole will be inspected to determine the depth to which the hole remains open and if any obstructions are present in the core hole; the presence and condition of any existing collar will also be documented. If necessary, the core hole will be cleaned out to a depth of at least 100 feet below the bedrock-LBFU contact to enable placement of cement seals.

If collar is present, an attempt will be made to remove it. If removal of the collar is not feasible, it will be left in the hole and perforated as needed to allow an annular seal to be placed to a depth of at least 25 feet bgs. In areas of agricultural use, the surface casing will be cut at least 5 feet bgs and removed.

If the collar cannot be removed, it will be perforated from at least 20 feet below the bedrock-LBFU contact to at least 20 feet above the contact; from at least 20 feet below the base of the MFGU to at least 20 feet above the top of the MFGU; and from at least 25 feet bgs to 5 feet bgs.

A tremie pipe will be used to place Type V cement in the open core hole from the bottom of the core hole to the top of the core hole. Cement retainers, as described above, will be used to force cement grout into the annulus and behind perforated intervals, as necessary.

If the hole has been obstructed, as much cement as possible will be placed from 100 feet below the LBFU-bedrock contact to the top of the core hole.

The volume of Type V cement will be recorded and will not be less than the estimated volume of material required to fill each interval. All cement grout will consist of Type V cement, or equivalent approved in accordance with the UIC Permit.

Certification

I certify under the penalty of law that I have personally examined and am familiar with the information submitted in this document and all attachments and that, based on my inquiry of those individuals immediately responsible for obtaining the information, I believe that the information is true, accurate, and complete. I am aware that there are significant penalties for submitting false information, including the possibliity of fine and imprisonment. (Ref. 40 CFR § 144.32)

Name and Official Title *(Please type or print)*	Signature	Date Signed
Dan Johnson, VP - General Manager		10/3/2019

INSTRUCTIONS FOR FORM 7520-19

This form replaces forms 7520-12 and 7520-14. Use this form only when work is planned or has occurred that affects the well's construction or operation as an injection well, including work on the casing, tubing or packer (or for shallow Class V wells, the subsurface fluid emplacement network). Use one form per injection well. While reports or other information developed by contractors or service companies may be attached, this form must be signed by a responsible entity as described at 40 CFR 144.32. Note: operators closing Class V wells should use Form 7520-17.

NAME, ADDRESS, PHONE AND/OR EMAIL OF PERMITTEE: Enter the name and street address, city/town, state, and ZIP code of the permittee. Also provide an email address (if available) and/or a phone number.

PERMIT OR EPA ID NUMBER: Enter the well identification number or permit number assigned to the well by the EPA or the permitting authority.

API NUMBER: Enter the number assigned by the local jurisdiction (usually a State Oil and Gas Agency) using the American Petroleum Institute standard numbering system.

FULL WELL NAME: Enter the full name of the well or project.

Enter the **STATE** and **COUNTY** where the well is located. For States that do not have counties, use the name of that State's equivalent jurisdiction at a more local level.

WELL LOCATION: Fill in the complete township, range, and section to the nearest quarter-quarter section. A township is north or south of the baseline, and a range is east or west of the principal meridian (e.g., T12N, R34W). Also include the distance, in feet, from the nearest north or south line and nearest east or west line of the quarter-section. Also, enter the **latitude** and **longitude** of the well in decimal degrees, to five or six places if possible; be sure to include a negative sign for the longitude of a well in the Western Hemisphere and a negative sign for the latitude of a well in the Southern Hemisphere.

Enter the **WELL CLASS,** i.e., the class of injection well as defined in 40 CFR 144.6.

TIMING OF THE ACTION: Check ***Notice prior to work*** if the activity has not yet occurred (i.e., is planned). Check ***Report after work*** if the activity described has already occurred. As appropriate, include the date the activity is expected to start or the date the activity was completed. (Note this may not be available, e.g., for a plugging plan submitted with a permit application.)

TYPE OF ACTION: Check the appropriate box to describe the kind of activity being reported. Check ***Well Rework*** for work that was/will be performed on the well after it has already been in operation as an injection well. Check ***Plugging and Abandonment*** to report on plans for or descriptions of final closure/plugging after use as an injection well. Check ***Conversion to a Non-Injection Well*** if the well is to be converted to something other than an injection well.

Provide a **NARRATIVE DESCRIPTION** of the work planned to be performed, or that was performed. The narrative should include a description of the main procedures planned or that occurred during the work activity. A service company report, daily report, or similar document may be attached if it includes all the requested information and is clear and legible.

For well reworks, include the following information: The reason for the well rework; depths of activity; type of activity; changes to injection well configuration, well casing, or cement behind casing; any plug added to the well and its depth; any newly drilled interval and its depth; method(s) to demonstrate that the well has mechanical integrity (as applicable); and any deviations from the approved rework plan (as applicable).

For a well plugging plan, include the following information: Reason for the well plugging; number of plugs placed, and their depths; materials used as plugs (e.g., cast iron bridge plug, cement, cement retainer); method to set plugs; and wait-on-cement times, if any. Also provide one or more cost estimates from an independent firm in the business of plugging and abandoning wells to plug the well as described in the plan.

For well plugging affidavit, include the following information: Reason for the well plugging; number of plugs placed, and their depths; materials used as plugs (e.g., cast iron bridge plug, cement, cement retainer); method to set plugs; wait-on-cement times, if any; and any deviations from the approved plugging plan (if applicable).

For conversion to a non-injection well, include the following information: Depths of activity; type of activity; changes to injection well configuration, well casing, or cement behind casing; any plug added to the well and its depth; any newly drilled interval and its depth; depths of new perforations; and method(s) to demonstrate that the well has mechanical integrity (as applicable).

For all of the above activities, include a well sketch depicting the work, results of well tests/logging performed, service company tickets, and any other available information demonstrating how the work was/is to be performed. Also, specify whether depths are below ground surface, relative to Kelly bushing, etc.

CERTIFICATION: This form must be signed and dated by either: a responsible corporate officer for a corporation, by a general partner for a partnership, by the proprietor of a sole proprietorship, or by a principal executive or ranking elected official for a public agency.

PAPERWORK REDUCTION ACT NOTICE: The public reporting and recordkeeping burden for this collection of information is estimated to average between 6.0 and 7.9 hours per response, depending on the injection well class. Burden means the total time, effort, or financial resource expended by persons to generate, maintain, retain, or disclose or provide information to or for a Federal Agency. This includes the time needed to review instructions; develop, acquire, install, and utilize technology and systems for the purposes of collecting, validating, and verifying information, processing and maintaining information, and disclosing and providing information; adjust the existing ways to comply with any previously applicable instructions and requirements; train personnel to be able to respond to the collection of information; search data sources; complete and review the collection of information; and, transmit or otherwise disclose the information. An agency may not conduct or sponsor, and a person is not required to respond to, a collection of information unless it displays a currently valid OMB control number. Send comments on the Agency's need for this information, the accuracy of the provided burden estimates, and any suggested methods for minimizing respondent burden, including the use of automated collection techniques to Director, Collection Strategies Division, U.S. Environmental Protection Agency (2822), 1200 Pennsylvania Ave., NW., Washington, D.C. 20460. Include the OMB control number in any correspondence. Do not send the completed forms to this address.

AS-BUILT COREHOLE 505MF

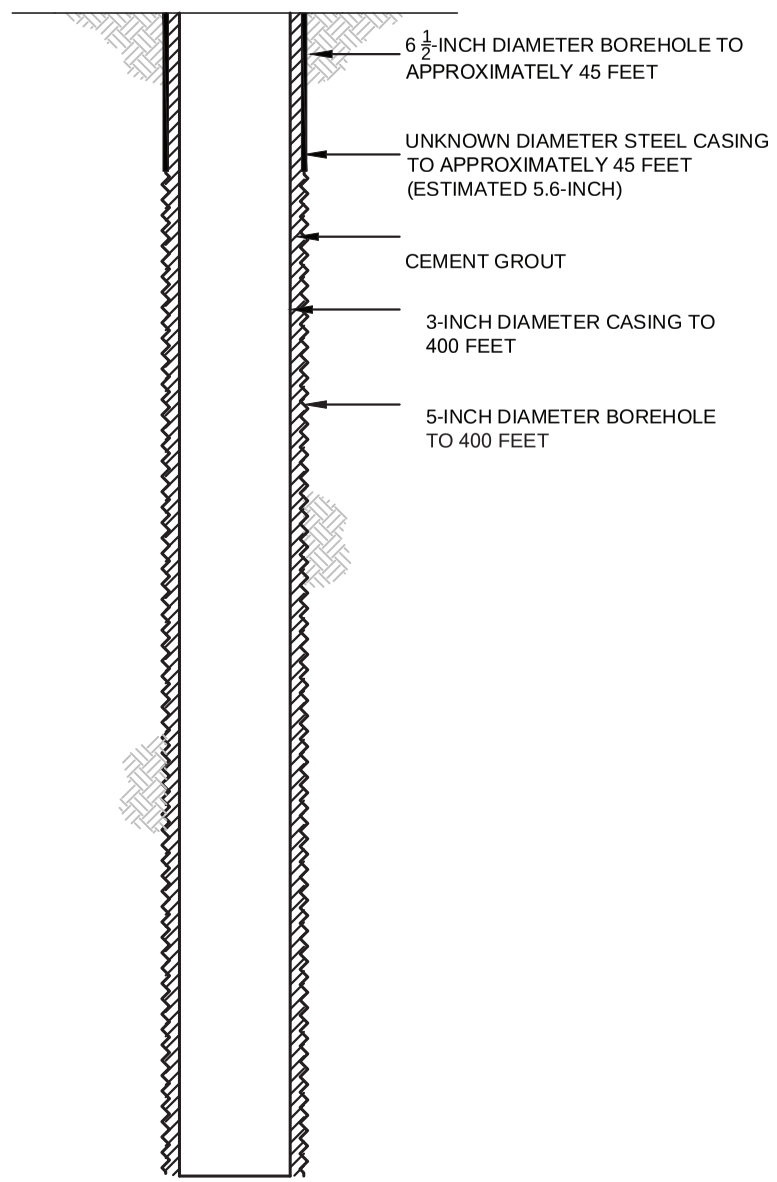

PROPOSED PLUGGING AND ABANDONMENT COREHOLE 505MF

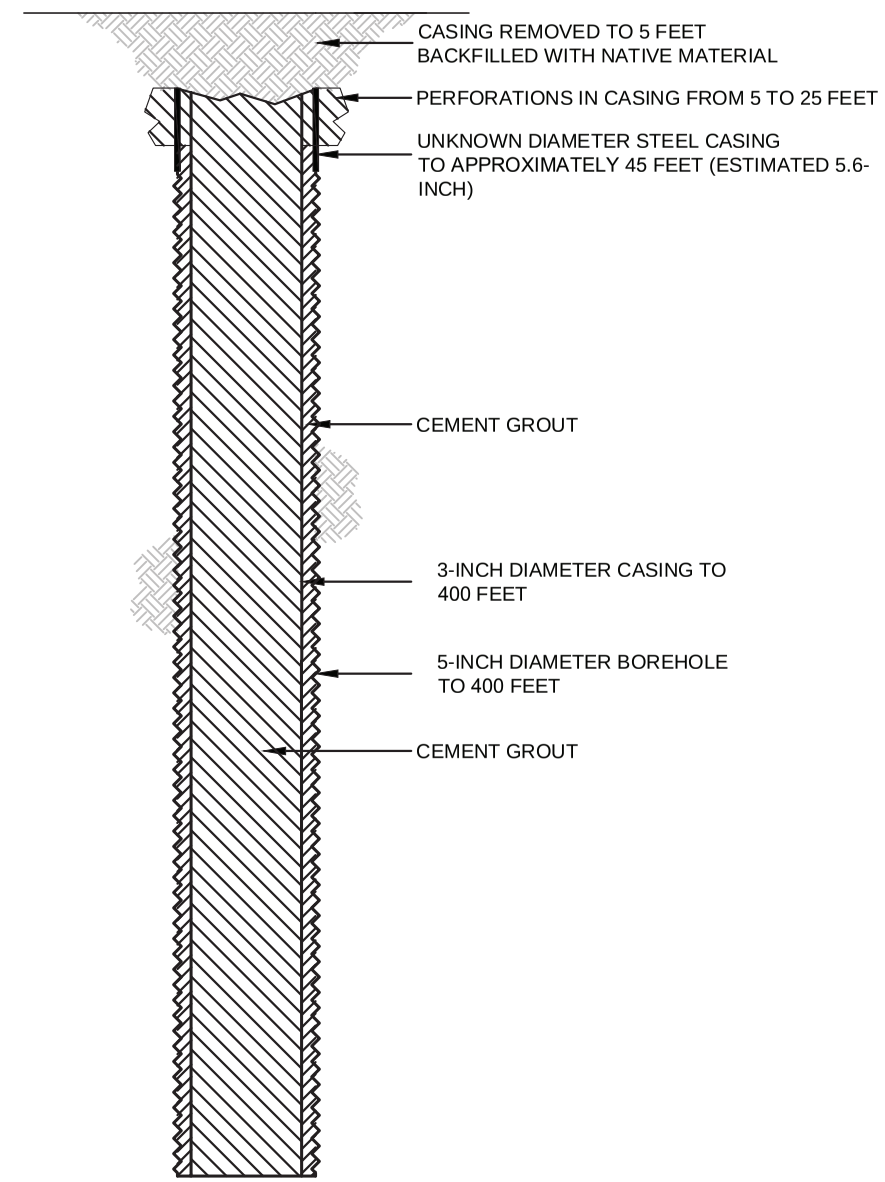

HALEY ALDRICH

FLORENCE COPPER, INC.
FLORENCE, ARIZONA

COREHOLE 505MF DIAGRAM

FLORENCE COPPER INC.

NOT TO SCALE
SEPTEMBER 2019

FIGURE 1

MOBINI, GITA
Printed: 4/21/2017 12:13 PM Layout: ABANDON (2)
G:\PROJECTS\CURIS RESOURCES\38706-CURIS FEASIBILITY\DRAWINGS\EPA\WELL\ABANDON\448S_ABANDON.DWG

OMB No. 2040-0042 Approval Expires 4/30/2022

United States Environmental Protection Agency

WELL REWORK RECORD, PLUGGING AND ABANDONMENT PLAN, OR PLUGGING AND ABANDONMENT AFFIDAVIT

Name and Address, Phone Number and/or Email of Permittee

Florence Copper Project
1575 W Hunt Hwy,
Florence, AZ 85132

Permit or EPA ID Number	API Number	Full Well Name
R9UIC-AZ3-FY11-1		506MF

State	County
Arizona	Pinal

Locate well in two directions from nearest lines of quarter section and drilling unit

Latitude 33.04380307

Surface Location

NE **1/4 of** NW **1/4 of Section** 33 **Township** 4S **Range** 9E

Longitude -111.4305974

_____ **ft. from (N/S)** _____ **Line of quarter section**

_____ **ft. from (E/W)** _____ **Line of quarter section.**

Well Class	Timing of Action (pick one)	Type of Action (pick one)
☐ Class I ☐ Class II ☑ Class III ☐ Class V	☑ Notice Prior to Work Date Expected to Commence March 2021 ☐ Report After Work Date Work Ended	☐ Well Rework ☑ Plugging and Abandonment ☐ Conversion to a Non-Injection Well

Provide a narrative description of the work planned to be performed, or that was performed. Use additional pages as necessary. See instructions.

A workover rig capable of performing the required abandonment operations at the required depths will be moved in and set up over the core hole. The core hole will be inspected to determine the depth to which the hole remains open and if any obstructions are present in the core hole; the presence and condition of any existing collar will also be documented. If necessary, the core hole will be cleaned out to a depth of at least 100 feet below the bedrock-LBFU contact to enable placement of cement seals.

If collar is present, an attempt will be made to remove it. If removal of the collar is not feasible, it will be left in the hole and perforated as needed to allow an annular seal to be placed to a depth of at least 25 feet bgs. In areas of agricultural use, the surface casing will be cut at least 5 feet bgs and removed.

If the collar cannot be removed, it will be perforated from at least 20 feet below the bedrock-LBFU contact to at least 20 feet above the contact; from at least 20 feet below the base of the MFGU to at least 20 feet above the top of the MFGU; and from at least 25 feet bgs to 5 feet bgs.

A tremie pipe will be used to place Type V cement in the open core hole from the bottom of the core hole to the top of the core hole. Cement retainers, as described above, will be used to force cement grout into the annulus and behind perforated intervals, as necessary.

If the hole has been obstructed, as much cement as possible will be placed from 100 feet below the LBFU-bedrock contact to the top of the core hole.

The volume of Type V cement will be recorded and will not be less than the estimated volume of material required to fill each interval. All cement grout will consist of Type V cement, or equivalent approved in accordance with the UIC Permit.

Certification

I certify under the penalty of law that I have personally examined and am familiar with the information submitted in this document and all attachments and that, based on my inquiry of those individuals immediately responsible for obtaining the information, I believe that the information is true, accurate, and complete. I am aware that there are significant penalties for submitting false information, including the possibliity of fine and imprisonment. (Ref. 40 CFR § 144.32)

Name and Official Title *(Please type or print)*	Signature	Date Signed
Dan Johnson, VP - General Manager		10/3/2019

INSTRUCTIONS FOR FORM 7520-19

This form replaces forms 7520-12 and 7520-14. Use this form only when work is planned or has occurred that affects the well's construction or operation as an injection well, including work on the casing, tubing or packer (or for shallow Class V wells, the subsurface fluid emplacement network). Use one form per injection well. While reports or other information developed by contractors or service companies may be attached, this form must be signed by a responsible entity as described at 40 CFR 144.32. Note: operators closing Class V wells should use Form 7520-17.

NAME, ADDRESS, PHONE AND/OR EMAIL OF PERMITTEE: Enter the name and street address, city/town, state, and ZIP code of the permittee. Also provide an email address (if available) and/or a phone number.

PERMIT OR EPA ID NUMBER: Enter the well identification number or permit number assigned to the well by the EPA or the permitting authority.

API NUMBER: Enter the number assigned by the local jurisdiction (usually a State Oil and Gas Agency) using the American Petroleum Institute standard numbering system.

FULL WELL NAME: Enter the full name of the well or project.

Enter the **STATE** and **COUNTY** where the well is located. For States that do not have counties, use the name of that State's equivalent jurisdiction at a more local level.

WELL LOCATION: Fill in the complete township, range, and section to the nearest quarter-quarter section. A township is north or south of the baseline, and a range is east or west of the principal meridian (e.g., T12N, R34W). Also include the distance, in feet, from the nearest north or south line and nearest east or west line of the quarter-section. Also, enter the **latitude** and **longitude** of the well in decimal degrees, to five or six places if possible; be sure to include a negative sign for the longitude of a well in the Western Hemisphere and a negative sign for the latitude of a well in the Southern Hemisphere.

Enter the **WELL CLASS,** i.e., the class of injection well as defined in 40 CFR 144.6.

TIMING OF THE ACTION: Check ***Notice prior to work*** if the activity has not yet occurred (i.e., is planned). Check ***Report after work*** if the activity described has already occurred. As appropriate, include the date the activity is expected to start or the date the activity was completed. (Note this may not be available, e.g., for a plugging plan submitted with a permit application.)

TYPE OF ACTION: Check the appropriate box to describe the kind of activity being reported. Check ***Well Rework*** for work that was/will be performed on the well after it has already been in operation as an injection well. Check ***Plugging and Abandonment*** to report on plans for or descriptions of final closure/plugging after use as an injection well. Check ***Conversion to a Non-Injection Well*** if the well is to be converted to something other than an injection well.

Provide a **NARRATIVE DESCRIPTION** of the work planned to be performed, or that was performed. The narrative should include a description of the main procedures planned or that occurred during the work activity. A service company report, daily report, or similar document may be attached if it includes all the requested information and is clear and legible.

For well reworks, include the following information: The reason for the well rework; depths of activity; type of activity; changes to injection well configuration, well casing, or cement behind casing; any plug added to the well and its depth; any newly drilled interval and its depth; method(s) to demonstrate that the well has mechanical integrity (as applicable); and any deviations from the approved rework plan (as applicable).

For a well plugging plan, include the following information: Reason for the well plugging; number of plugs placed, and their depths; materials used as plugs (e.g., cast iron bridge plug, cement, cement retainer); method to set plugs; and wait-on-cement times, if any. Also provide one or more cost estimates from an independent firm in the business of plugging and abandoning wells to plug the well as described in the plan.

For well plugging affidavit, include the following information: Reason for the well plugging; number of plugs placed, and their depths; materials used as plugs (e.g., cast iron bridge plug, cement, cement retainer); method to set plugs; wait-on-cement times, if any; and any deviations from the approved plugging plan (if applicable).

For conversion to a non-injection well, include the following information: Depths of activity; type of activity; changes to injection well configuration, well casing, or cement behind casing; any plug added to the well and its depth; any newly drilled interval and its depth; depths of new perforations; and method(s) to demonstrate that the well has mechanical integrity (as applicable).

For all of the above activities, include a well sketch depicting the work, results of well tests/logging performed, service company tickets, and any other available information demonstrating how the work was/is to be performed. Also, specify whether depths are below ground surface, relative to Kelly bushing, etc.

CERTIFICATION: This form must be signed and dated by either: a responsible corporate officer for a corporation, by a general partner for a partnership, by the proprietor of a sole proprietorship, or by a principal executive or ranking elected official for a public agency.

PAPERWORK REDUCTION ACT NOTICE: The public reporting and recordkeeping burden for this collection of information is estimated to average between 6.0 and 7.9 hours per response, depending on the injection well class. Burden means the total time, effort, or financial resource expended by persons to generate, maintain, retain, or disclose or provide information to or for a Federal Agency. This includes the time needed to review instructions; develop, acquire, install, and utilize technology and systems for the purposes of collecting, validating, and verifying information, processing and maintaining information, and disclosing and providing information; adjust the existing ways to comply with any previously applicable instructions and requirements; train personnel to be able to respond to the collection of information; search data sources; complete and review the collection of information; and, transmit or otherwise disclose the information. An agency may not conduct or sponsor, and a person is not required to respond to, a collection of information unless it displays a currently valid OMB control number. Send comments on the Agency's need for this information, the accuracy of the provided burden estimates, and any suggested methods for minimizing respondent burden, including the use of automated collection techniques to Director, Collection Strategies Division, U.S. Environmental Protection Agency (2822), 1200 Pennsylvania Ave., NW., Washington, D.C. 20460. Include the OMB control number in any correspondence. Do not send the completed forms to this address.

AS-BUILT COREHOLE 506MF

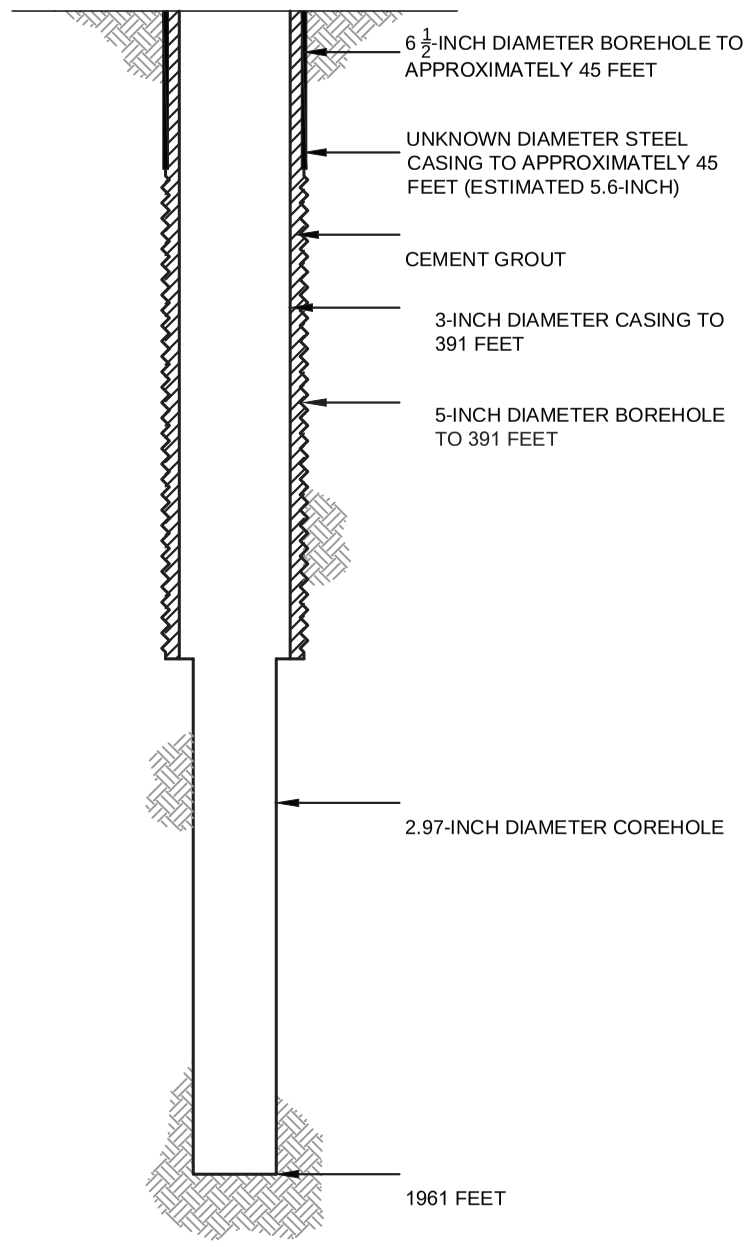

PROPOSED PLUGGING AND ABANDONMENT COREHOLE 506MF

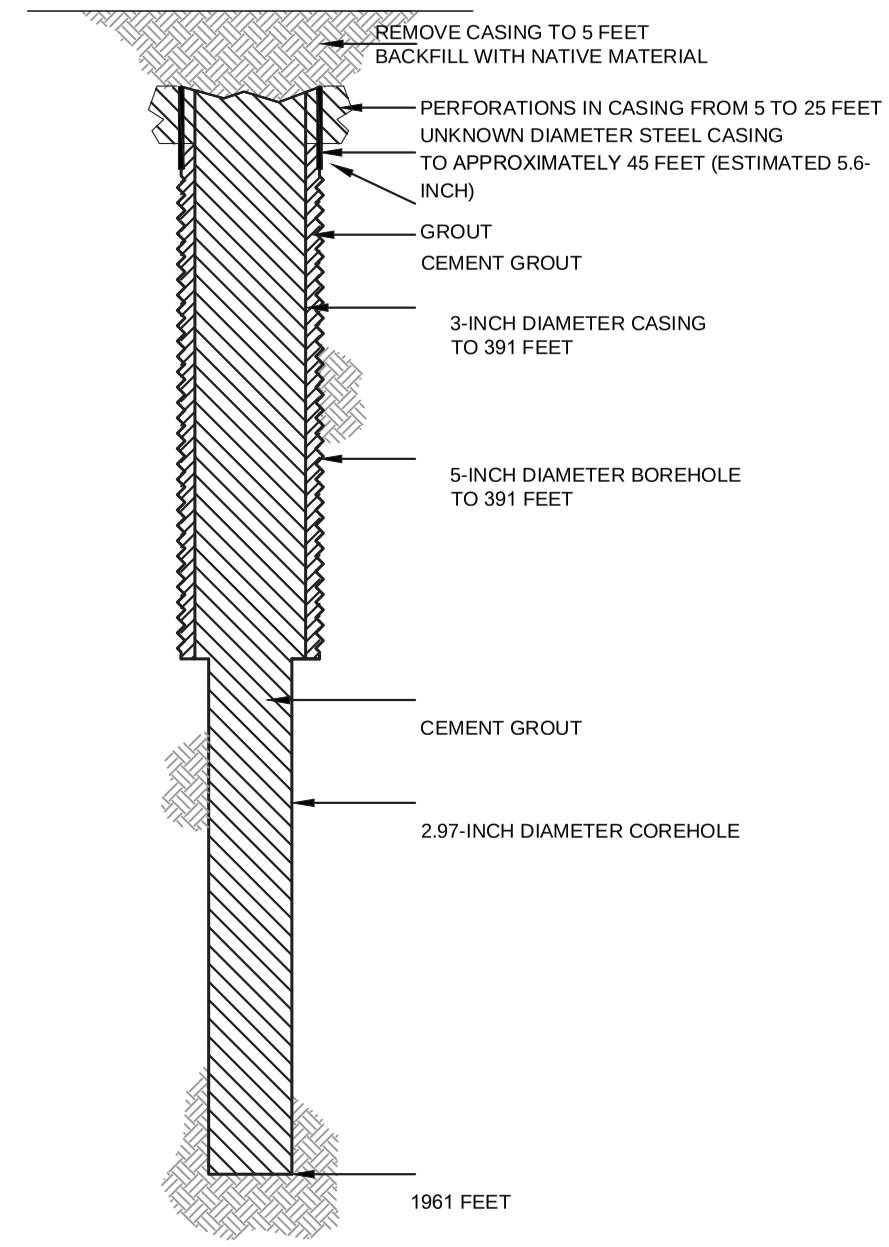

HALEY ALDRICH

FLORENCE COPPER, INC.
FLORENCE, ARIZONA

COREHOLE 506MF DIAGRAM

FLORENCE COPPER INC.

NOT TO SCALE
SEPTEMBER 2019

FIGURE 1

MOBINI, GITA Printed: 4/21/2017 12:00 PM Layout: ABANDON (2)
\PROJECTS\CURIS RESOURCES38706-CURIS FEASIBILITY\DRAWINGS\EPA\WELL ABANDON\415S_ABANDON.DWG

OMB No. 2040-0042 Approval Expires 4/30/2022

United States Environmental Protection Agency

EPA

WELL REWORK RECORD, PLUGGING AND ABANDONMENT PLAN, OR PLUGGING AND ABANDONMENT AFFIDAVIT

Name and Address, Phone Number and/or Email of Permittee

Florence Copper Project
1575 W Hunt Hwy,
Florence, AZ 85132

Permit or EPA ID Number	API Number	Full Well Name
R9UIC-AZ3-FY11-1		507MF

State	County
Arizona	Pinal

Locate well in two directions from nearest lines of quarter section and drilling unit

Surface Location

NE 1/4 of NW 1/4 of Section 33 Township 4S Range 9E

Latitude 33.04320642

Longitude -111.4301928

_____ ft. from (N/S) _____ Line of quarter section

_____ ft. from (E/W) _____ Line of quarter section.

Well Class	Timing of Action (pick one)	Type of Action (pick one)
☐ Class I ☐ Class II ☑ Class III ☐ Class V	☑ Notice Prior to Work Date Expected to Commence March 2021 ☐ Report After Work Date Work Ended	☐ Well Rework ☑ Plugging and Abandonment ☐ Conversion to a Non-Injection Well

Provide a narrative description of the work planned to be performed, or that was performed. Use additional pages as necessary. See instructions.

A workover rig capable of performing the required abandonment operations at the required depths will be moved in and set up over the core hole. The core hole will be inspected to determine the depth to which the hole remains open and if any obstructions are present in the core hole; the presence and condition of any existing collar will also be documented. If necessary, the core hole will be cleaned out to a depth of at least 100 feet below the bedrock-LBFU contact to enable placement of cement seals.

If collar is present, an attempt will be made to remove it. If removal of the collar is not feasible, it will be left in the hole and perforated as needed to allow an annular seal to be placed to a depth of at least 25 feet bgs. In areas of agricultural use, the surface casing will be cut at least 5 feet bgs and removed.

If the collar cannot be removed, it will be perforated from at least 20 feet below the bedrock-LBFU contact to at least 20 feet above the contact; from at least 20 feet below the base of the MFGU to at least 20 feet above the top of the MFGU; and from at least 25 feet bgs to 5 feet bgs.

A tremie pipe will be used to place Type V cement in the open core hole from the bottom of the core hole to the top of the core hole. Cement retainers, as described above, will be used to force cement grout into the annulus and behind perforated intervals, as necessary.

If the hole has been obstructed, as much cement as possible will be placed from 100 feet below the LBFU-bedrock contact to the top of the core hole.

The volume of Type V cement will be recorded and will not be less than the estimated volume of material required to fill each interval. All cement grout will consist of Type V cement, or equivalent approved in accordance with the UIC Permit.

Certification

I certify under the penalty of law that I have personally examined and am familiar with the information submitted in this document and all attachments and that, based on my inquiry of those individuals immediately responsible for obtaining the information, I believe that the information is true, accurate, and complete. I am aware that there are significant penalties for submitting false information, including the possibliity of fine and imprisonment. (Ref. 40 CFR § 144.32)

Name and Official Title *(Please type or print)*	Signature	Date Signed
Dan Johnson, VP - General Manager		10/3/2019

INSTRUCTIONS FOR FORM 7520-19

This form replaces forms 7520-12 and 7520-14. Use this form only when work is planned or has occurred that affects the well's construction or operation as an injection well, including work on the casing, tubing or packer (or for shallow Class V wells, the subsurface fluid emplacement network). Use one form per injection well. While reports or other information developed by contractors or service companies may be attached, this form must be signed by a responsible entity as described at 40 CFR 144.32. Note: operators closing Class V wells should use Form 7520-17.

NAME, ADDRESS, PHONE AND/OR EMAIL OF PERMITTEE: Enter the name and street address, city/town, state, and ZIP code of the permittee. Also provide an email address (if available) and/or a phone number.

PERMIT OR EPA ID NUMBER: Enter the well identification number or permit number assigned to the well by the EPA or the permitting authority.

API NUMBER: Enter the number assigned by the local jurisdiction (usually a State Oil and Gas Agency) using the American Petroleum Institute standard numbering system.

FULL WELL NAME: Enter the full name of the well or project.

Enter the **STATE** and **COUNTY** where the well is located. For States that do not have counties, use the name of that State's equivalent jurisdiction at a more local level.

WELL LOCATION: Fill in the complete township, range, and section to the nearest quarter-quarter section. A township is north or south of the baseline, and a range is east or west of the principal meridian (e.g., T12N, R34W). Also include the distance, in feet, from the nearest north or south line and nearest east or west line of the quarter-section. Also, enter the **latitude** and **longitude** of the well in decimal degrees, to five or six places if possible; be sure to include a negative sign for the longitude of a well in the Western Hemisphere and a negative sign for the latitude of a well in the Southern Hemisphere.

Enter the **WELL CLASS,** i.e., the class of injection well as defined in 40 CFR 144.6.

TIMING OF THE ACTION: Check ***Notice prior to work*** if the activity has not yet occurred (i.e., is planned). Check ***Report after work*** if the activity described has already occurred. As appropriate, include the date the activity is expected to start or the date the activity was completed. (Note this may not be available, e.g., for a plugging plan submitted with a permit application.)

TYPE OF ACTION: Check the appropriate box to describe the kind of activity being reported. Check ***Well Rework*** for work that was/will be performed on the well after it has already been in operation as an injection well. Check ***Plugging and Abandonment*** to report on plans for or descriptions of final closure/plugging after use as an injection well. Check ***Conversion to a Non-Injection Well*** if the well is to be converted to something other than an injection well.

Provide a **NARRATIVE DESCRIPTION** of the work planned to be performed, or that was performed. The narrative should include a description of the main procedures planned or that occurred during the work activity. A service company report, daily report, or similar document may be attached if it includes all the requested information and is clear and legible.

For well reworks, include the following information: The reason for the well rework; depths of activity; type of activity; changes to injection well configuration, well casing, or cement behind casing; any plug added to the well and its depth; any newly drilled interval and its depth; method(s) to demonstrate that the well has mechanical integrity (as applicable); and any deviations from the approved rework plan (as applicable).

For a well plugging plan, include the following information: Reason for the well plugging; number of plugs placed, and their depths; materials used as plugs (e.g., cast iron bridge plug, cement, cement retainer); method to set plugs; and wait-on-cement times, if any. Also provide one or more cost estimates from an independent firm in the business of plugging and abandoning wells to plug the well as described in the plan.

For well plugging affidavit, include the following information: Reason for the well plugging; number of plugs placed, and their depths; materials used as plugs (e.g., cast iron bridge plug, cement, cement retainer); method to set plugs; wait-on-cement times, if any; and any deviations from the approved plugging plan (if applicable).

For conversion to a non-injection well, include the following information: Depths of activity; type of activity; changes to injection well configuration, well casing, or cement behind casing; any plug added to the well and its depth; any newly drilled interval and its depth; depths of new perforations; and method(s) to demonstrate that the well has mechanical integrity (as applicable).

For all of the above activities, include a well sketch depicting the work, results of well tests/logging performed, service company tickets, and any other available information demonstrating how the work was/is to be performed. Also, specify whether depths are below ground surface, relative to Kelly bushing, etc.

CERTIFICATION: This form must be signed and dated by either: a responsible corporate officer for a corporation, by a general partner for a partnership, by the proprietor of a sole proprietorship, or by a principal executive or ranking elected official for a public agency.

PAPERWORK REDUCTION ACT NOTICE: The public reporting and recordkeeping burden for this collection of information is estimated to average between 6.0 and 7.9 hours per response, depending on the injection well class. Burden means the total time, effort, or financial resource expended by persons to generate, maintain, retain, or disclose or provide information to or for a Federal Agency. This includes the time needed to review instructions; develop, acquire, install, and utilize technology and systems for the purposes of collecting, validating, and verifying information, processing and maintaining information, and disclosing and providing information; adjust the existing ways to comply with any previously applicable instructions and requirements; train personnel to be able to respond to the collection of information; search data sources; complete and review the collection of information; and, transmit or otherwise disclose the information. An agency may not conduct or sponsor, and a person is not required to respond to, a collection of information unless it displays a currently valid OMB control number. Send comments on the Agency's need for this information, the accuracy of the provided burden estimates, and any suggested methods for minimizing respondent burden, including the use of automated collection techniques to Director, Collection Strategies Division, U.S. Environmental Protection Agency (2822), 1200 Pennsylvania Ave., NW., Washington, D.C. 20460. Include the OMB control number in any correspondence. Do not send the completed forms to this address.

AS-BUILT COREHOLE 507MF

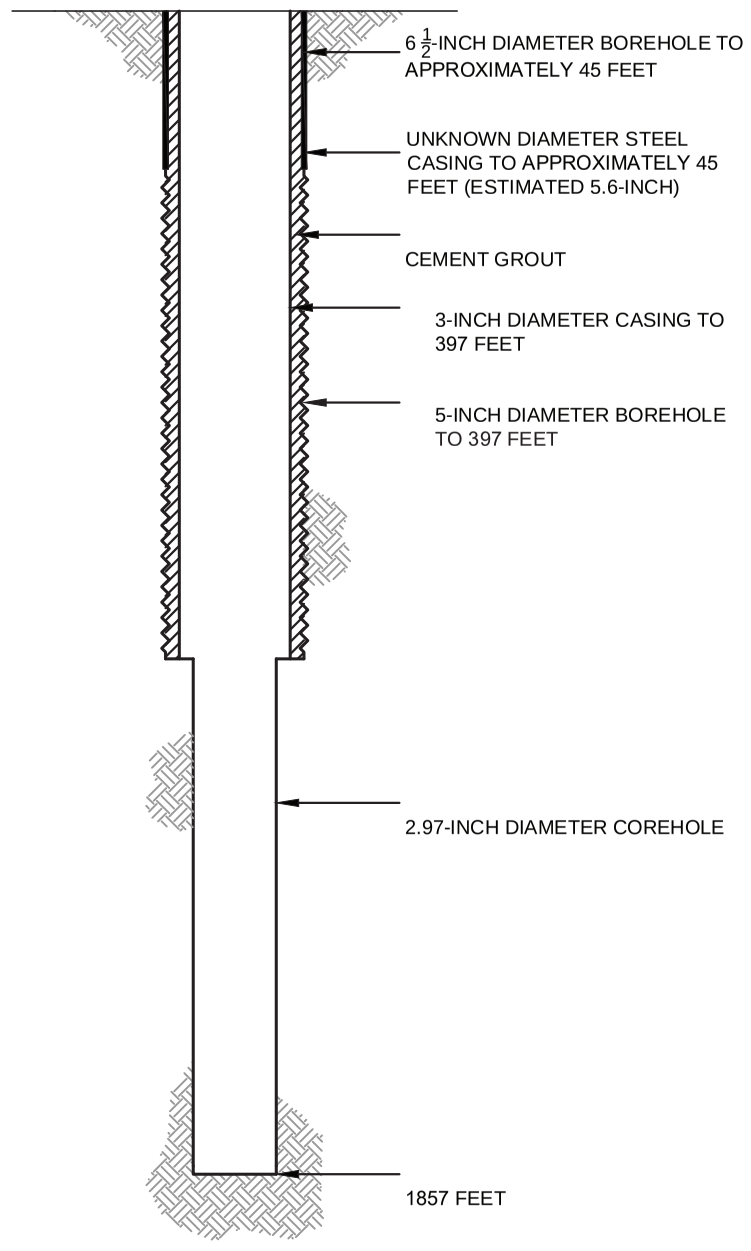

PROPOSED PLUGGING AND ABANDONMENT COREHOLE 507MF

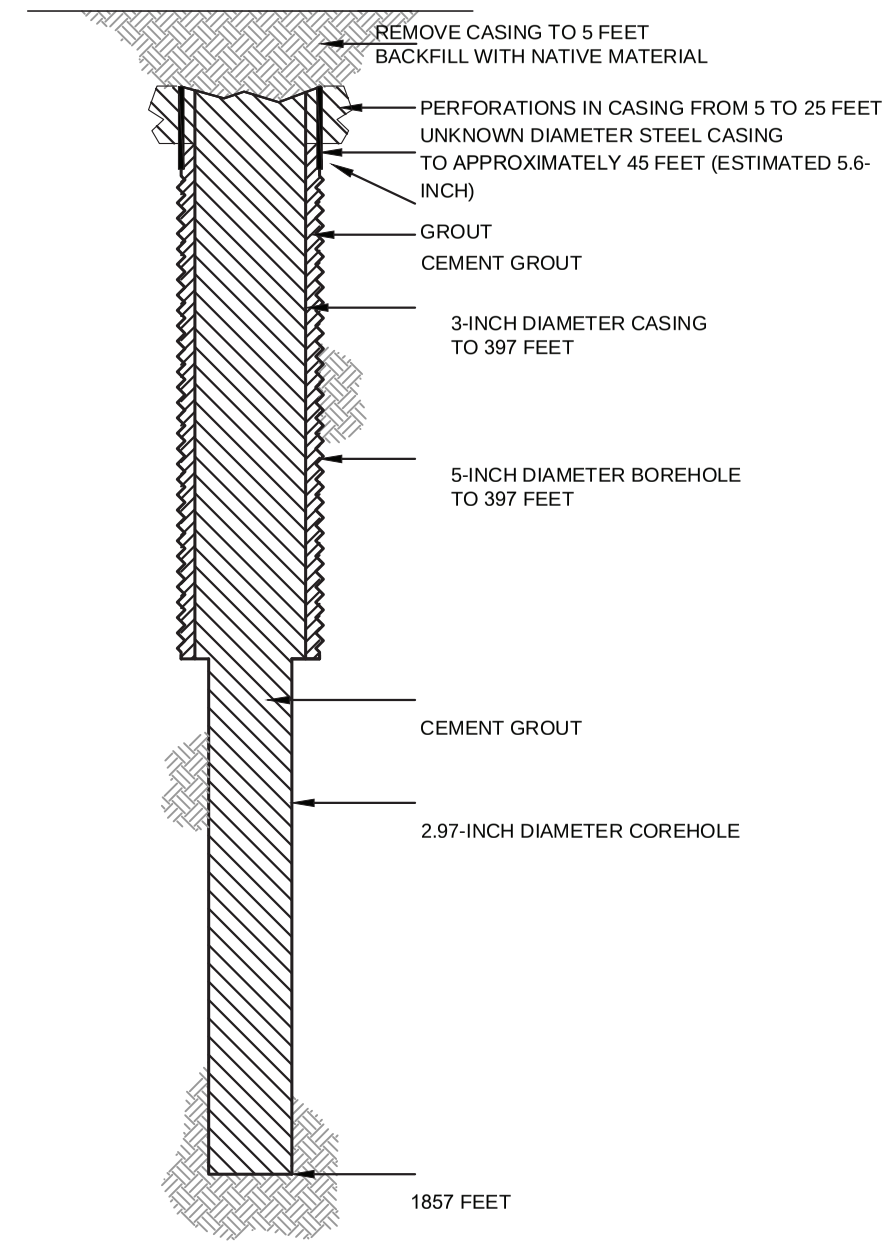

HALEY ALDRICH

FLORENCE COPPER, INC.
FLORENCE, ARIZONA

COREHOLE 507MF DIAGRAM

FLORENCE COPPER INC.

NOT TO SCALE
SEPTEMBER 2019

FIGURE 1

MOBINI, GITA Printed: 4/21/2017 12:00 PM Layout: ABANDON (2)
\PROJECTS\CURIS RESOURCES38706-CURIS FEASIBILITY\DRAWINGS\EPA\WELL ABANDON\415S_ABANDON.DWG

OMB No. 2040-0042 Approval Expires 4/30/2022

United States Environmental Protection Agency

WELL REWORK RECORD, PLUGGING AND ABANDONMENT PLAN, OR PLUGGING AND ABANDONMENT AFFIDAVIT

Name and Address, Phone Number and/or Email of Permittee

Florence Copper Project
1575 W Hunt Hwy,
Florence, AZ 85132

Permit or EPA ID Number	API Number	Full Well Name
R9UIC-AZ3-FY11-1		508MF

State	County
Arizona	Pinal

Locate well in two directions from nearest lines of quarter section and drilling unit

Surface Location

NE 1/4 of NW 1/4 of Section 33 Township 4S Range 9E

Latitude 33.0432096

Longitude -111.4310086

ft. from (N/S) Line of quarter section

ft. from (E/W) Line of quarter section.

Well Class	Timing of Action (pick one)	Type of Action (pick one)
☐ Class I ☐ Class II ☑ Class III ☐ Class V	☑ Notice Prior to Work Date Expected to Commence March 2021 ☐ Report After Work Date Work Ended	☐ Well Rework ☑ Plugging and Abandonment ☐ Conversion to a Non-Injection Well

Provide a narrative description of the work planned to be performed, or that was performed. Use additional pages as necessary. See instructions.

A workover rig capable of performing the required abandonment operations at the required depths will be moved in and set up over the core hole. The core hole will be inspected to determine the depth to which the hole remains open and if any obstructions are present in the core hole; the presence and condition of any existing collar will also be documented. If necessary, the core hole will be cleaned out to a depth of at least 100 feet below the bedrock-LBFU contact to enable placement of cement seals.

If collar is present, an attempt will be made to remove it. If removal of the collar is not feasible, it will be left in the hole and perforated as needed to allow an annular seal to be placed to a depth of at least 25 feet bgs. In areas of agricultural use, the surface casing will be cut at least 5 feet bgs and removed.

If the collar cannot be removed, it will be perforated from at least 20 feet below the bedrock-LBFU contact to at least 20 feet above the contact; from at least 20 feet below the base of the MFGU to at least 20 feet above the top of the MFGU; and from at least 25 feet bgs to 5 feet bgs.

A tremie pipe will be used to place Type V cement in the open core hole from the bottom of the core hole to the top of the core hole. Cement retainers, as described above, will be used to force cement grout into the annulus and behind perforated intervals, as necessary.

If the hole has been obstructed, as much cement as possible will be placed from 100 feet below the LBFU-bedrock contact to the top of the core hole.

The volume of Type V cement will be recorded and will not be less than the estimated volume of material required to fill each interval. All cement grout will consist of Type V cement, or equivalent approved in accordance with the UIC Permit.

Certification

I certify under the penalty of law that I have personally examined and am familiar with the information submitted in this document and all attachments and that, based on my inquiry of those individuals immediately responsible for obtaining the information, I believe that the information is true, accurate, and complete. I am aware that there are significant penalties for submitting false information, including the possibliity of fine and imprisonment. (Ref. 40 CFR § 144.32)

Name and Official Title *(Please type or print)*	Signature	Date Signed
Dan Johnson, VP - General Manager		10/3/2019

INSTRUCTIONS FOR FORM 7520-19

This form replaces forms 7520-12 and 7520-14. Use this form only when work is planned or has occurred that affects the well's construction or operation as an injection well, including work on the casing, tubing or packer (or for shallow Class V wells, the subsurface fluid emplacement network). Use one form per injection well. While reports or other information developed by contractors or service companies may be attached, this form must be signed by a responsible entity as described at 40 CFR 144.32. Note: operators closing Class V wells should use Form 7520-17.

NAME, ADDRESS, PHONE AND/OR EMAIL OF PERMITTEE: Enter the name and street address, city/town, state, and ZIP code of the permittee. Also provide an email address (if available) and/or a phone number.

PERMIT OR EPA ID NUMBER: Enter the well identification number or permit number assigned to the well by the EPA or the permitting authority.

API NUMBER: Enter the number assigned by the local jurisdiction (usually a State Oil and Gas Agency) using the American Petroleum Institute standard numbering system.

FULL WELL NAME: Enter the full name of the well or project.

Enter the **STATE** and **COUNTY** where the well is located. For States that do not have counties, use the name of that State's equivalent jurisdiction at a more local level.

WELL LOCATION: Fill in the complete township, range, and section to the nearest quarter-quarter section. A township is north or south of the baseline, and a range is east or west of the principal meridian (e.g., T12N, R34W). Also include the distance, in feet, from the nearest north or south line and nearest east or west line of the quarter-section. Also, enter the **latitude** and **longitude** of the well in decimal degrees, to five or six places if possible; be sure to include a negative sign for the longitude of a well in the Western Hemisphere and a negative sign for the latitude of a well in the Southern Hemisphere.

Enter the **WELL CLASS,** i.e., the class of injection well as defined in 40 CFR 144.6.

TIMING OF THE ACTION: Check ***Notice prior to work*** if the activity has not yet occurred (i.e., is planned). Check ***Report after work*** if the activity described has already occurred. As appropriate, include the date the activity is expected to start or the date the activity was completed. (Note this may not be available, e.g., for a plugging plan submitted with a permit application.)

TYPE OF ACTION: Check the appropriate box to describe the kind of activity being reported. Check ***Well Rework*** for work that was/will be performed on the well after it has already been in operation as an injection well. Check ***Plugging and Abandonment*** to report on plans for or descriptions of final closure/plugging after use as an injection well. Check ***Conversion to a Non-Injection Well*** if the well is to be converted to something other than an injection well.

Provide a **NARRATIVE DESCRIPTION** of the work planned to be performed, or that was performed. The narrative should include a description of the main procedures planned or that occurred during the work activity. A service company report, daily report, or similar document may be attached if it includes all the requested information and is clear and legible.

For well reworks, include the following information: The reason for the well rework; depths of activity; type of activity; changes to injection well configuration, well casing, or cement behind casing; any plug added to the well and its depth; any newly drilled interval and its depth; method(s) to demonstrate that the well has mechanical integrity (as applicable); and any deviations from the approved rework plan (as applicable).

For a well plugging plan, include the following information: Reason for the well plugging; number of plugs placed, and their depths; materials used as plugs (e.g., cast iron bridge plug, cement, cement retainer); method to set plugs; and wait-on-cement times, if any. Also provide one or more cost estimates from an independent firm in the business of plugging and abandoning wells to plug the well as described in the plan.

For well plugging affidavit, include the following information: Reason for the well plugging; number of plugs placed, and their depths; materials used as plugs (e.g., cast iron bridge plug, cement, cement retainer); method to set plugs; wait-on-cement times, if any; and any deviations from the approved plugging plan (if applicable).

For conversion to a non-injection well, include the following information: Depths of activity; type of activity; changes to injection well configuration, well casing, or cement behind casing; any plug added to the well and its depth; any newly drilled interval and its depth; depths of new perforations; and method(s) to demonstrate that the well has mechanical integrity (as applicable).

For all of the above activities, include a well sketch depicting the work, results of well tests/logging performed, service company tickets, and any other available information demonstrating how the work was/is to be performed. Also, specify whether depths are below ground surface, relative to Kelly bushing, etc.

CERTIFICATION: This form must be signed and dated by either: a responsible corporate officer for a corporation, by a general partner for a partnership, by the proprietor of a sole proprietorship, or by a principal executive or ranking elected official for a public agency.

PAPERWORK REDUCTION ACT NOTICE: The public reporting and recordkeeping burden for this collection of information is estimated to average between 6.0 and 7.9 hours per response, depending on the injection well class. Burden means the total time, effort, or financial resource expended by persons to generate, maintain, retain, or disclose or provide information to or for a Federal Agency. This includes the time needed to review instructions; develop, acquire, install, and utilize technology and systems for the purposes of collecting, validating, and verifying information, processing and maintaining information, and disclosing and providing information; adjust the existing ways to comply with any previously applicable instructions and requirements; train personnel to be able to respond to the collection of information; search data sources; complete and review the collection of information; and, transmit or otherwise disclose the information. An agency may not conduct or sponsor, and a person is not required to respond to, a collection of information unless it displays a currently valid OMB control number. Send comments on the Agency's need for this information, the accuracy of the provided burden estimates, and any suggested methods for minimizing respondent burden, including the use of automated collection techniques to Director, Collection Strategies Division, U.S. Environmental Protection Agency (2822), 1200 Pennsylvania Ave., NW., Washington, D.C. 20460. Include the OMB control number in any correspondence. Do not send the completed forms to this address.

AS-BUILT COREHOLE 508MF

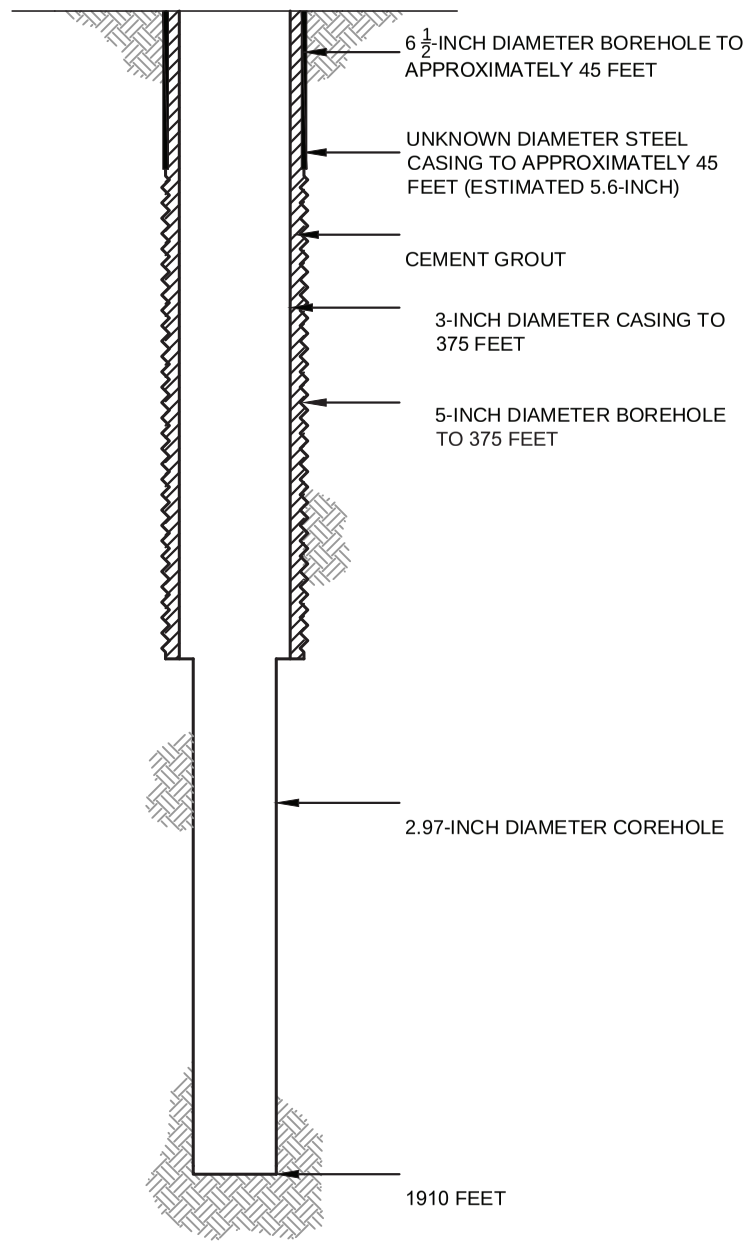

PROPOSED PLUGGING AND ABANDONMENT COREHOLE 508MF

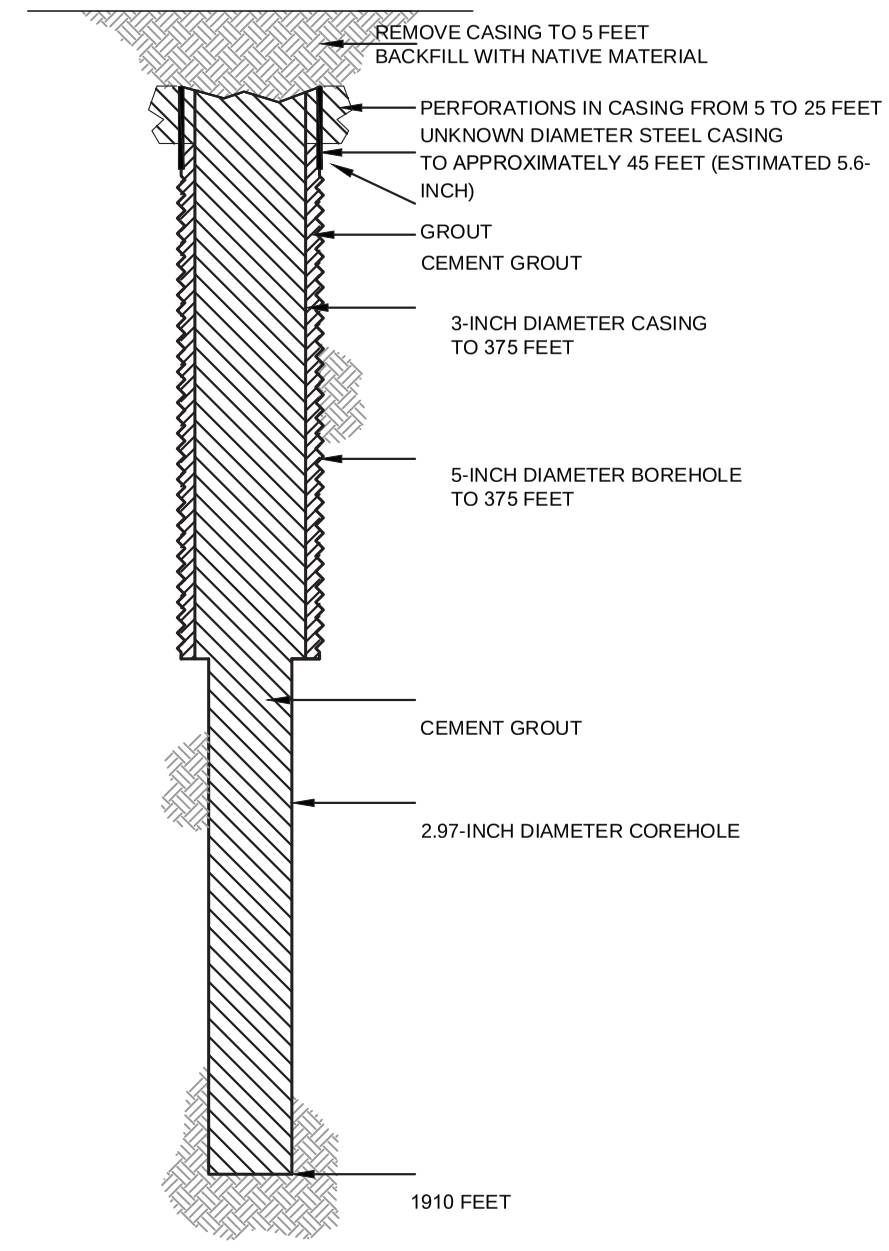

HALEY ALDRICH

FLORENCE COPPER, INC.
FLORENCE, ARIZONA

COREHOLE 508MF DIAGRAM

FLORENCE COPPER INC.

NOT TO SCALE
SEPTEMBER 2019

FIGURE 1

MOBINI, GITA Printed: 4/21/2017 12:00 PM Layout: ABANDON (2)
\PROJECTS\CURIS RESOURCES38706-CURIS FEASIBILITY\DRAWINGS\EPA\WELL ABANDON\415S_ABANDON.DWG

OMB No. 2040-0042 Approval Expires 4/30/2022

United States Environmental Protection Agency

WELL REWORK RECORD, PLUGGING AND ABANDONMENT PLAN, OR PLUGGING AND ABANDONMENT AFFIDAVIT

Name and Address, Phone Number and/or Email of Permittee

Florence Copper Project
1575 W Hunt Hwy,
Florence, AZ 85132

Permit or EPA ID Number	API Number	Full Well Name
R9UIC-AZ3-FY11-1		509MF

State	County
Arizona	Pinal

Locate well in two directions from nearest lines of quarter section and drilling unit

Surface Location

NE 1/4 of NW 1/4 of Section 33 Township 4S Range 9E

Latitude 33.04321277

Longitude -111.4318244

_____ ft. from (N/S) _____ Line of quarter section

_____ ft. from (E/W) _____ Line of quarter section.

Well Class	Timing of Action (pick one)	Type of Action (pick one)
☐ Class I ☐ Class II ☑ Class III ☐ Class V	☑ Notice Prior to Work Date Expected to Commence March 2021 ☐ Report After Work Date Work Ended	☐ Well Rework ☑ Plugging and Abandonment ☐ Conversion to a Non-Injection Well

Provide a narrative description of the work planned to be performed, or that was performed. Use additional pages as necessary. See instructions.

A workover rig capable of performing the required abandonment operations at the required depths will be moved in and set up over the core hole. The core hole will be inspected to determine the depth to which the hole remains open and if any obstructions are present in the core hole; the presence and condition of any existing collar will also be documented. If necessary, the core hole will be cleaned out to a depth of at least 100 feet below the bedrock-LBFU contact to enable placement of cement seals.

If collar is present, an attempt will be made to remove it. If removal of the collar is not feasible, it will be left in the hole and perforated as needed to allow an annular seal to be placed to a depth of at least 25 feet bgs. In areas of agricultural use, the surface casing will be cut at least 5 feet bgs and removed.

If the collar cannot be removed, it will be perforated from at least 20 feet below the bedrock-LBFU contact to at least 20 feet above the contact; from at least 20 feet below the base of the MFGU to at least 20 feet above the top of the MFGU; and from at least 25 feet bgs to 5 feet bgs.

A tremie pipe will be used to place Type V cement in the open core hole from the bottom of the core hole to the top of the core hole. Cement retainers, as described above, will be used to force cement grout into the annulus and behind perforated intervals, as necessary.

If the hole has been obstructed, as much cement as possible will be placed from 100 feet below the LBFU-bedrock contact to the top of the core hole.

The volume of Type V cement will be recorded and will not be less than the estimated volume of material required to fill each interval. All cement grout will consist of Type V cement, or equivalent approved in accordance with the UIC Permit.

Certification

I certify under the penalty of law that I have personally examined and am familiar with the information submitted in this document and all attachments and that, based on my inquiry of those individuals immediately responsible for obtaining the information, I believe that the information is true, accurate, and complete. I am aware that there are significant penalties for submitting false information, including the possibliity of fine and imprisonment. (Ref. 40 CFR § 144.32)

Name and Official Title *(Please type or print)*	Signature	Date Signed
Dan Johnson, VP - General Manager		10/3/2019

INSTRUCTIONS FOR FORM 7520-19

This form replaces forms 7520-12 and 7520-14. Use this form only when work is planned or has occurred that affects the well's construction or operation as an injection well, including work on the casing, tubing or packer (or for shallow Class V wells, the subsurface fluid emplacement network). Use one form per injection well. While reports or other information developed by contractors or service companies may be attached, this form must be signed by a responsible entity as described at 40 CFR 144.32. Note: operators closing Class V wells should use Form 7520-17.

NAME, ADDRESS, PHONE AND/OR EMAIL OF PERMITTEE: Enter the name and street address, city/town, state, and ZIP code of the permittee. Also provide an email address (if available) and/or a phone number.

PERMIT OR EPA ID NUMBER: Enter the well identification number or permit number assigned to the well by the EPA or the permitting authority.

API NUMBER: Enter the number assigned by the local jurisdiction (usually a State Oil and Gas Agency) using the American Petroleum Institute standard numbering system.

FULL WELL NAME: Enter the full name of the well or project.

Enter the **STATE** and **COUNTY** where the well is located. For States that do not have counties, use the name of that State's equivalent jurisdiction at a more local level.

WELL LOCATION: Fill in the complete township, range, and section to the nearest quarter-quarter section. A township is north or south of the baseline, and a range is east or west of the principal meridian (e.g., T12N, R34W). Also include the distance, in feet, from the nearest north or south line and nearest east or west line of the quarter-section. Also, enter the **latitude** and **longitude** of the well in decimal degrees, to five or six places if possible; be sure to include a negative sign for the longitude of a well in the Western Hemisphere and a negative sign for the latitude of a well in the Southern Hemisphere.

Enter the **WELL CLASS,** i.e., the class of injection well as defined in 40 CFR 144.6.

TIMING OF THE ACTION: Check ***Notice prior to work*** if the activity has not yet occurred (i.e., is planned). Check ***Report after work*** if the activity described has already occurred. As appropriate, include the date the activity is expected to start or the date the activity was completed. (Note this may not be available, e.g., for a plugging plan submitted with a permit application.)

TYPE OF ACTION: Check the appropriate box to describe the kind of activity being reported. Check ***Well Rework*** for work that was/will be performed on the well after it has already been in operation as an injection well. Check ***Plugging and Abandonment*** to report on plans for or descriptions of final closure/plugging after use as an injection well. Check ***Conversion to a Non-Injection Well*** if the well is to be converted to something other than an injection well.

Provide a **NARRATIVE DESCRIPTION** of the work planned to be performed, or that was performed. The narrative should include a description of the main procedures planned or that occurred during the work activity. A service company report, daily report, or similar document may be attached if it includes all the requested information and is clear and legible.

For well reworks, include the following information: The reason for the well rework; depths of activity; type of activity; changes to injection well configuration, well casing, or cement behind casing; any plug added to the well and its depth; any newly drilled interval and its depth; method(s) to demonstrate that the well has mechanical integrity (as applicable); and any deviations from the approved rework plan (as applicable).

For a well plugging plan, include the following information: Reason for the well plugging; number of plugs placed, and their depths; materials used as plugs (e.g., cast iron bridge plug, cement, cement retainer); method to set plugs; and wait-on-cement times, if any. Also provide one or more cost estimates from an independent firm in the business of plugging and abandoning wells to plug the well as described in the plan.

For well plugging affidavit, include the following information: Reason for the well plugging; number of plugs placed, and their depths; materials used as plugs (e.g., cast iron bridge plug, cement, cement retainer); method to set plugs; wait-on-cement times, if any; and any deviations from the approved plugging plan (if applicable).

For conversion to a non-injection well, include the following information: Depths of activity; type of activity; changes to injection well configuration, well casing, or cement behind casing; any plug added to the well and its depth; any newly drilled interval and its depth; depths of new perforations; and method(s) to demonstrate that the well has mechanical integrity (as applicable).

For all of the above activities, include a well sketch depicting the work, results of well tests/logging performed, service company tickets, and any other available information demonstrating how the work was/is to be performed. Also, specify whether depths are below ground surface, relative to Kelly bushing, etc.

CERTIFICATION: This form must be signed and dated by either: a responsible corporate officer for a corporation, by a general partner for a partnership, by the proprietor of a sole proprietorship, or by a principal executive or ranking elected official for a public agency.

PAPERWORK REDUCTION ACT NOTICE: The public reporting and recordkeeping burden for this collection of information is estimated to average between 6.0 and 7.9 hours per response, depending on the injection well class. Burden means the total time, effort, or financial resource expended by persons to generate, maintain, retain, or disclose or provide information to or for a Federal Agency. This includes the time needed to review instructions; develop, acquire, install, and utilize technology and systems for the purposes of collecting, validating, and verifying information, processing and maintaining information, and disclosing and providing information; adjust the existing ways to comply with any previously applicable instructions and requirements; train personnel to be able to respond to the collection of information; search data sources; complete and review the collection of information; and, transmit or otherwise disclose the information. An agency may not conduct or sponsor, and a person is not required to respond to, a collection of information unless it displays a currently valid OMB control number. Send comments on the Agency's need for this information, the accuracy of the provided burden estimates, and any suggested methods for minimizing respondent burden, including the use of automated collection techniques to Director, Collection Strategies Division, U.S. Environmental Protection Agency (2822), 1200 Pennsylvania Ave., NW., Washington, D.C. 20460. Include the OMB control number in any correspondence. Do not send the completed forms to this address.

AS-BUILT COREHOLE 509MF

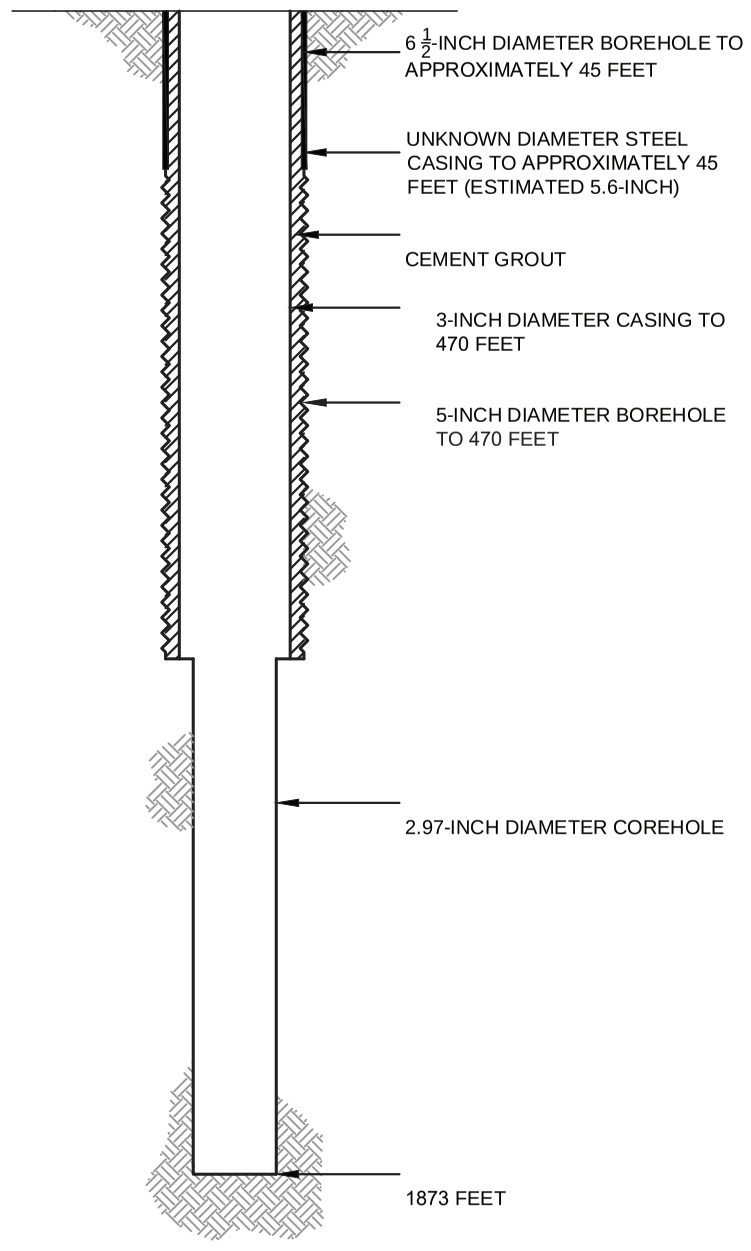

PROPOSED PLUGGING AND ABANDONMENT COREHOLE 509MF

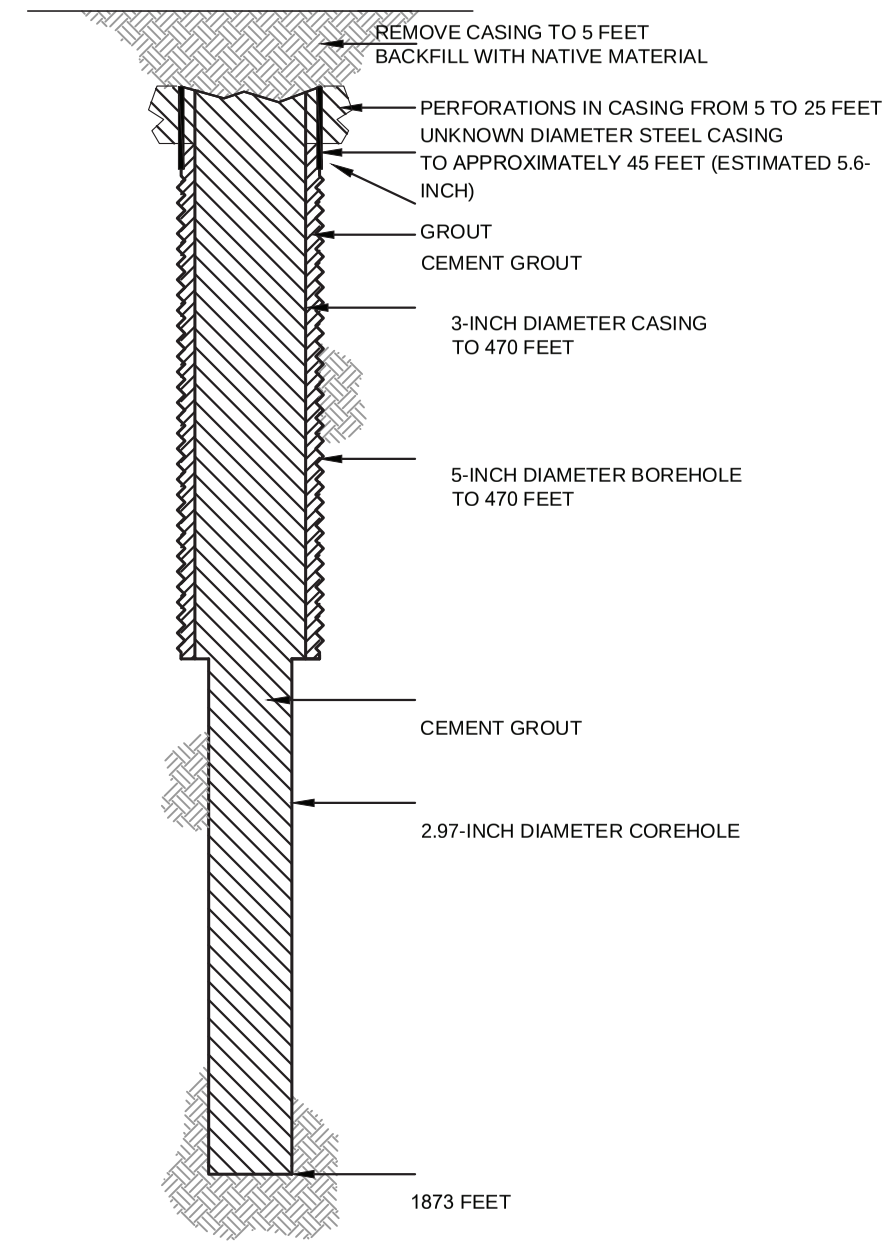

HALEY ALDRICH

FLORENCE COPPER, INC.
FLORENCE, ARIZONA

COREHOLE 509MF DIAGRAM

FLORENCE COPPER INC.

NOT TO SCALE
SEPTEMBER 2019

FIGURE 1

MOBINI, GITA Printed: 4/21/2017 12:00 PM Layout: ABANDON (2)
\PROJECTS\CURIS RESOURCES38706-CURIS FEASIBILITY\DRAWINGS\EPA\WELL ABANDON\415S_ABANDON.DWG

OMB No. 2040-0042 Approval Expires 4/30/2022

United States Environmental Protection Agency

WELL REWORK RECORD, PLUGGING AND ABANDONMENT PLAN, OR PLUGGING AND ABANDONMENT AFFIDAVIT

Name and Address, Phone Number and/or Email of Permittee

Florence Copper Project
1575 W Hunt Hwy,
Florence, AZ 85132

Permit or EPA ID Number	API Number	Full Well Name
R9UIC-AZ3-FY11-1		510MF

State	County
Arizona	Pinal

Locate well in two directions from nearest lines of quarter section and drilling unit

Surface Location

NE 1/4 of NW 1/4 of Section 33 Township 4S Range 9E

Latitude 33.04321594

Longitude -111.4326402

ft. from (N/S) Line of quarter section

ft. from (E/W) Line of quarter section.

Well Class	Timing of Action (pick one)	Type of Action (pick one)
☐ Class I ☐ Class II ☑ Class III ☐ Class V	☑ Notice Prior to Work Date Expected to Commence March 2021 ☐ Report After Work Date Work Ended	☐ Well Rework ☑ Plugging and Abandonment ☐ Conversion to a Non-Injection Well

Provide a narrative description of the work planned to be performed, or that was performed. Use additional pages as necessary. See instructions.

A workover rig capable of performing the required abandonment operations at the required depths will be moved in and set up over the core hole. The core hole will be inspected to determine the depth to which the hole remains open and if any obstructions are present in the core hole; the presence and condition of any existing collar will also be documented. If necessary, the core hole will be cleaned out to a depth of at least 100 feet below the bedrock-LBFU contact to enable placement of cement seals.

If collar is present, an attempt will be made to remove it. If removal of the collar is not feasible, it will be left in the hole and perforated as needed to allow an annular seal to be placed to a depth of at least 25 feet bgs. In areas of agricultural use, the surface casing will be cut at least 5 feet bgs and removed.

If the collar cannot be removed, it will be perforated from at least 20 feet below the bedrock-LBFU contact to at least 20 feet above the contact; from at least 20 feet below the base of the MFGU to at least 20 feet above the top of the MFGU; and from at least 25 feet bgs to 5 feet bgs.

A tremie pipe will be used to place Type V cement in the open core hole from the bottom of the core hole to the top of the core hole. Cement retainers, as described above, will be used to force cement grout into the annulus and behind perforated intervals, as necessary.

If the hole has been obstructed, as much cement as possible will be placed from 100 feet below the LBFU-bedrock contact to the top of the core hole.

The volume of Type V cement will be recorded and will not be less than the estimated volume of material required to fill each interval. All cement grout will consist of Type V cement, or equivalent approved in accordance with the UIC Permit.

Certification

I certify under the penalty of law that I have personally examined and am familiar with the information submitted in this document and all attachments and that, based on my inquiry of those individuals immediately responsible for obtaining the information, I believe that the information is true, accurate, and complete. I am aware that there are significant penalties for submitting false information, including the possibliity of fine and imprisonment. (Ref. 40 CFR § 144.32)

Name and Official Title *(Please type or print)*	Signature	Date Signed
Dan Johnson, VP - General Manager		10/3/2019

INSTRUCTIONS FOR FORM 7520-19

This form replaces forms 7520-12 and 7520-14. Use this form only when work is planned or has occurred that affects the well's construction or operation as an injection well, including work on the casing, tubing or packer (or for shallow Class V wells, the subsurface fluid emplacement network). Use one form per injection well. While reports or other information developed by contractors or service companies may be attached, this form must be signed by a responsible entity as described at 40 CFR 144.32. Note: operators closing Class V wells should use Form 7520-17.

NAME, ADDRESS, PHONE AND/OR EMAIL OF PERMITTEE: Enter the name and street address, city/town, state, and ZIP code of the permittee. Also provide an email address (if available) and/or a phone number.

PERMIT OR EPA ID NUMBER: Enter the well identification number or permit number assigned to the well by the EPA or the permitting authority.

API NUMBER: Enter the number assigned by the local jurisdiction (usually a State Oil and Gas Agency) using the American Petroleum Institute standard numbering system.

FULL WELL NAME: Enter the full name of the well or project.

Enter the **STATE** and **COUNTY** where the well is located. For States that do not have counties, use the name of that State's equivalent jurisdiction at a more local level.

WELL LOCATION: Fill in the complete township, range, and section to the nearest quarter-quarter section. A township is north or south of the baseline, and a range is east or west of the principal meridian (e.g., T12N, R34W). Also include the distance, in feet, from the nearest north or south line and nearest east or west line of the quarter-section. Also, enter the **latitude** and **longitude** of the well in decimal degrees, to five or six places if possible; be sure to include a negative sign for the longitude of a well in the Western Hemisphere and a negative sign for the latitude of a well in the Southern Hemisphere.

Enter the **WELL CLASS,** i.e., the class of injection well as defined in 40 CFR 144.6.

TIMING OF THE ACTION: Check ***Notice prior to work*** if the activity has not yet occurred (i.e., is planned). Check ***Report after work*** if the activity described has already occurred. As appropriate, include the date the activity is expected to start or the date the activity was completed. (Note this may not be available, e.g., for a plugging plan submitted with a permit application.)

TYPE OF ACTION: Check the appropriate box to describe the kind of activity being reported. Check ***Well Rework*** for work that was/will be performed on the well after it has already been in operation as an injection well. Check ***Plugging and Abandonment*** to report on plans for or descriptions of final closure/plugging after use as an injection well. Check ***Conversion to a Non-Injection Well*** if the well is to be converted to something other than an injection well.

Provide a **NARRATIVE DESCRIPTION** of the work planned to be performed, or that was performed. The narrative should include a description of the main procedures planned or that occurred during the work activity. A service company report, daily report, or similar document may be attached if it includes all the requested information and is clear and legible.

For well reworks, include the following information: The reason for the well rework; depths of activity; type of activity; changes to injection well configuration, well casing, or cement behind casing; any plug added to the well and its depth; any newly drilled interval and its depth; method(s) to demonstrate that the well has mechanical integrity (as applicable); and any deviations from the approved rework plan (as applicable).

For a well plugging plan, include the following information: Reason for the well plugging; number of plugs placed, and their depths; materials used as plugs (e.g., cast iron bridge plug, cement, cement retainer); method to set plugs; and wait-on-cement times, if any. Also provide one or more cost estimates from an independent firm in the business of plugging and abandoning wells to plug the well as described in the plan.

For well plugging affidavit, include the following information: Reason for the well plugging; number of plugs placed, and their depths; materials used as plugs (e.g., cast iron bridge plug, cement, cement retainer); method to set plugs; wait-on-cement times, if any; and any deviations from the approved plugging plan (if applicable).

For conversion to a non-injection well, include the following information: Depths of activity; type of activity; changes to injection well configuration, well casing, or cement behind casing; any plug added to the well and its depth; any newly drilled interval and its depth; depths of new perforations; and method(s) to demonstrate that the well has mechanical integrity (as applicable).

For all of the above activities, include a well sketch depicting the work, results of well tests/logging performed, service company tickets, and any other available information demonstrating how the work was/is to be performed. Also, specify whether depths are below ground surface, relative to Kelly bushing, etc.

CERTIFICATION: This form must be signed and dated by either: a responsible corporate officer for a corporation, by a general partner for a partnership, by the proprietor of a sole proprietorship, or by a principal executive or ranking elected official for a public agency.

PAPERWORK REDUCTION ACT NOTICE: The public reporting and recordkeeping burden for this collection of information is estimated to average between 6.0 and 7.9 hours per response, depending on the injection well class. Burden means the total time, effort, or financial resource expended by persons to generate, maintain, retain, or disclose or provide information to or for a Federal Agency. This includes the time needed to review instructions; develop, acquire, install, and utilize technology and systems for the purposes of collecting, validating, and verifying information, processing and maintaining information, and disclosing and providing information; adjust the existing ways to comply with any previously applicable instructions and requirements; train personnel to be able to respond to the collection of information; search data sources; complete and review the collection of information; and, transmit or otherwise disclose the information. An agency may not conduct or sponsor, and a person is not required to respond to, a collection of information unless it displays a currently valid OMB control number. Send comments on the Agency's need for this information, the accuracy of the provided burden estimates, and any suggested methods for minimizing respondent burden, including the use of automated collection techniques to Director, Collection Strategies Division, U.S. Environmental Protection Agency (2822), 1200 Pennsylvania Ave., NW., Washington, D.C. 20460. Include the OMB control number in any correspondence. Do not send the completed forms to this address.

OMB No. 2040-0042 Approval Expires 4/30/2022

United States Environmental Protection Agency

WELL REWORK RECORD, PLUGGING AND ABANDONMENT PLAN, OR PLUGGING AND ABANDONMENT AFFIDAVIT

Name and Address, Phone Number and/or Email of Permittee

Florence Copper Project
1575 W Hunt Hwy,
Florence, AZ 85132

Permit or EPA ID Number	API Number	Full Well Name
R9UIC-AZ3-FY11-1		511MF

State	County
Arizona	Pinal

Locate well in two directions from nearest lines of quarter section and drilling unit

Latitude 33.0432191

Surface Location

NE **1/4 of** NW **1/4 of Section** 33 **Township** 4S **Range** 9E

Longitude -111.433456

_____ **ft. from (N/S)** _____ **Line of quarter section**

_____ **ft. from (E/W)** _____ **Line of quarter section.**

Well Class	Timing of Action (pick one)	Type of Action (pick one)
☐ Class I ☐ Class II ☑ Class III ☐ Class V	☑ Notice Prior to Work Date Expected to Commence March 2021 ☐ Report After Work Date Work Ended	☐ Well Rework ☑ Plugging and Abandonment ☐ Conversion to a Non-Injection Well

Provide a narrative description of the work planned to be performed, or that was performed. Use additional pages as necessary. See instructions.

A workover rig capable of performing the required abandonment operations at the required depths will be moved in and set up over the core hole. The core hole will be inspected to determine the depth to which the hole remains open and if any obstructions are present in the core hole; the presence and condition of any existing collar will also be documented. If necessary, the core hole will be cleaned out to a depth of at least 100 feet below the bedrock-LBFU contact to enable placement of cement seals.

If collar is present, an attempt will be made to remove it. If removal of the collar is not feasible, it will be left in the hole and perforated as needed to allow an annular seal to be placed to a depth of at least 25 feet bgs. In areas of agricultural use, the surface casing will be cut at least 5 feet bgs and removed.

If the collar cannot be removed, it will be perforated from at least 20 feet below the bedrock-LBFU contact to at least 20 feet above the contact; from at least 20 feet below the base of the MFGU to at least 20 feet above the top of the MFGU; and from at least 25 feet bgs to 5 feet bgs.

A tremie pipe will be used to place Type V cement in the open core hole from the bottom of the core hole to the top of the core hole. Cement retainers, as described above, will be used to force cement grout into the annulus and behind perforated intervals, as necessary.

If the hole has been obstructed, as much cement as possible will be placed from 100 feet below the LBFU-bedrock contact to the top of the core hole.

The volume of Type V cement will be recorded and will not be less than the estimated volume of material required to fill each interval. All cement grout will consist of Type V cement, or equivalent approved in accordance with the UIC Permit.

Certification

I certify under the penalty of law that I have personally examined and am familiar with the information submitted in this document and all attachments and that, based on my inquiry of those individuals immediately responsible for obtaining the information, I believe that the information is true, accurate, and complete. I am aware that there are significant penalties for submitting false information, including the possibliity of fine and imprisonment. (Ref. 40 CFR § 144.32)

Name and Official Title *(Please type or print)*	Signature	Date Signed
Dan Johnson, VP - General Manager		10/3/2019

INSTRUCTIONS FOR FORM 7520-19

This form replaces forms 7520-12 and 7520-14. Use this form only when work is planned or has occurred that affects the well's construction or operation as an injection well, including work on the casing, tubing or packer (or for shallow Class V wells, the subsurface fluid emplacement network). Use one form per injection well. While reports or other information developed by contractors or service companies may be attached, this form must be signed by a responsible entity as described at 40 CFR 144.32. Note: operators closing Class V wells should use Form 7520-17.

NAME, ADDRESS, PHONE AND/OR EMAIL OF PERMITTEE: Enter the name and street address, city/town, state, and ZIP code of the permittee. Also provide an email address (if available) and/or a phone number.

PERMIT OR EPA ID NUMBER: Enter the well identification number or permit number assigned to the well by the EPA or the permitting authority.

API NUMBER: Enter the number assigned by the local jurisdiction (usually a State Oil and Gas Agency) using the American Petroleum Institute standard numbering system.

FULL WELL NAME: Enter the full name of the well or project.

Enter the **STATE** and **COUNTY** where the well is located. For States that do not have counties, use the name of that State's equivalent jurisdiction at a more local level.

WELL LOCATION: Fill in the complete township, range, and section to the nearest quarter-quarter section. A township is north or south of the baseline, and a range is east or west of the principal meridian (e.g., T12N, R34W). Also include the distance, in feet, from the nearest north or south line and nearest east or west line of the quarter-section. Also, enter the **latitude** and **longitude** of the well in decimal degrees, to five or six places if possible; be sure to include a negative sign for the longitude of a well in the Western Hemisphere and a negative sign for the latitude of a well in the Southern Hemisphere.

Enter the **WELL CLASS,** i.e., the class of injection well as defined in 40 CFR 144.6.

TIMING OF THE ACTION: Check ***Notice prior to work*** if the activity has not yet occurred (i.e., is planned). Check ***Report after work*** if the activity described has already occurred. As appropriate, include the date the activity is expected to start or the date the activity was completed. (Note this may not be available, e.g., for a plugging plan submitted with a permit application.)

TYPE OF ACTION: Check the appropriate box to describe the kind of activity being reported. Check ***Well Rework*** for work that was/will be performed on the well after it has already been in operation as an injection well. Check ***Plugging and Abandonment*** to report on plans for or descriptions of final closure/plugging after use as an injection well. Check ***Conversion to a Non-Injection Well*** if the well is to be converted to something other than an injection well.

Provide a **NARRATIVE DESCRIPTION** of the work planned to be performed, or that was performed. The narrative should include a description of the main procedures planned or that occurred during the work activity. A service company report, daily report, or similar document may be attached if it includes all the requested information and is clear and legible.

For well reworks, include the following information: The reason for the well rework; depths of activity; type of activity; changes to injection well configuration, well casing, or cement behind casing; any plug added to the well and its depth; any newly drilled interval and its depth; method(s) to demonstrate that the well has mechanical integrity (as applicable); and any deviations from the approved rework plan (as applicable).

For a well plugging plan, include the following information: Reason for the well plugging; number of plugs placed, and their depths; materials used as plugs (e.g., cast iron bridge plug, cement, cement retainer); method to set plugs; and wait-on-cement times, if any. Also provide one or more cost estimates from an independent firm in the business of plugging and abandoning wells to plug the well as described in the plan.

For well plugging affidavit, include the following information: Reason for the well plugging; number of plugs placed, and their depths; materials used as plugs (e.g., cast iron bridge plug, cement, cement retainer); method to set plugs; wait-on-cement times, if any; and any deviations from the approved plugging plan (if applicable).

For conversion to a non-injection well, include the following information: Depths of activity; type of activity; changes to injection well configuration, well casing, or cement behind casing; any plug added to the well and its depth; any newly drilled interval and its depth; depths of new perforations; and method(s) to demonstrate that the well has mechanical integrity (as applicable).

For all of the above activities, include a well sketch depicting the work, results of well tests/logging performed, service company tickets, and any other available information demonstrating how the work was/is to be performed. Also, specify whether depths are below ground surface, relative to Kelly bushing, etc.

CERTIFICATION: This form must be signed and dated by either: a responsible corporate officer for a corporation, by a general partner for a partnership, by the proprietor of a sole proprietorship, or by a principal executive or ranking elected official for a public agency.

PAPERWORK REDUCTION ACT NOTICE: The public reporting and recordkeeping burden for this collection of information is estimated to average between 6.0 and 7.9 hours per response, depending on the injection well class. Burden means the total time, effort, or financial resource expended by persons to generate, maintain, retain, or disclose or provide information to or for a Federal Agency. This includes the time needed to review instructions; develop, acquire, install, and utilize technology and systems for the purposes of collecting, validating, and verifying information, processing and maintaining information, and disclosing and providing information; adjust the existing ways to comply with any previously applicable instructions and requirements; train personnel to be able to respond to the collection of information; search data sources; complete and review the collection of information; and, transmit or otherwise disclose the information. An agency may not conduct or sponsor, and a person is not required to respond to, a collection of information unless it displays a currently valid OMB control number. Send comments on the Agency's need for this information, the accuracy of the provided burden estimates, and any suggested methods for minimizing respondent burden, including the use of automated collection techniques to Director, Collection Strategies Division, U.S. Environmental Protection Agency (2822), 1200 Pennsylvania Ave., NW., Washington, D.C. 20460. Include the OMB control number in any correspondence. Do not send the completed forms to this address.

AS-BUILT COREHOLE 511MF

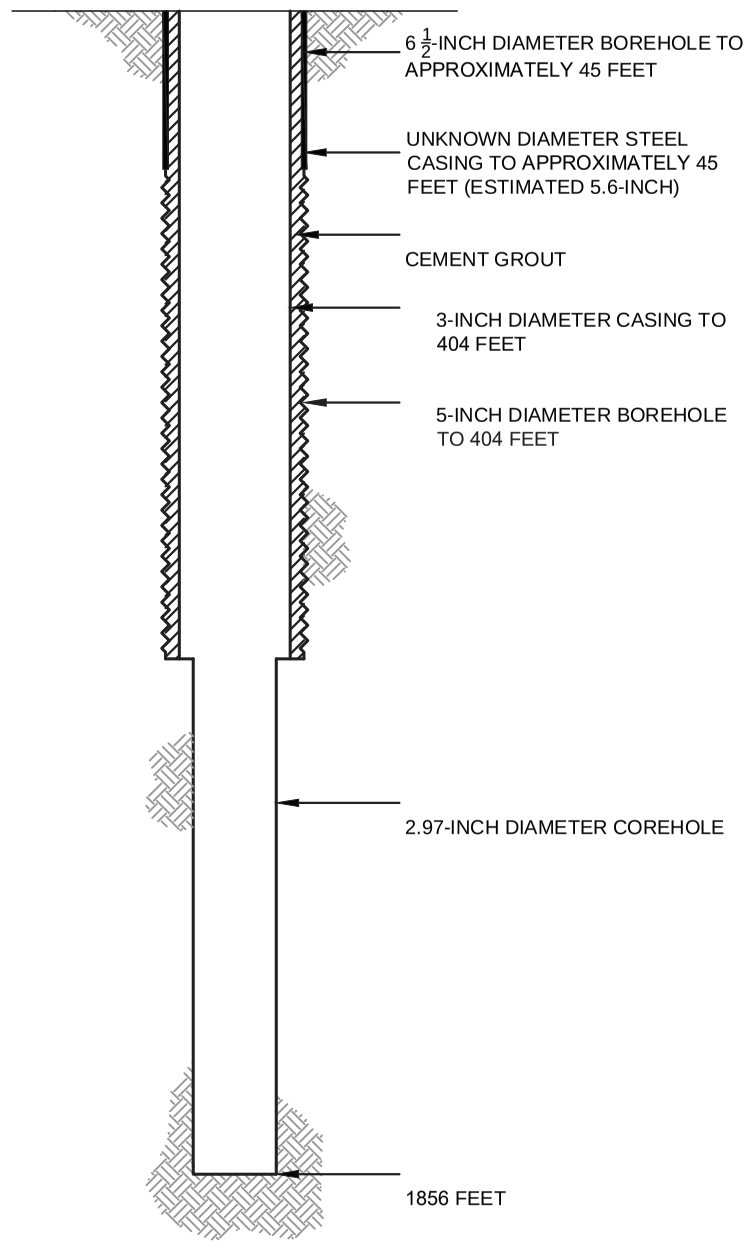

PROPOSED PLUGGING AND ABANDONMENT COREHOLE 511MF

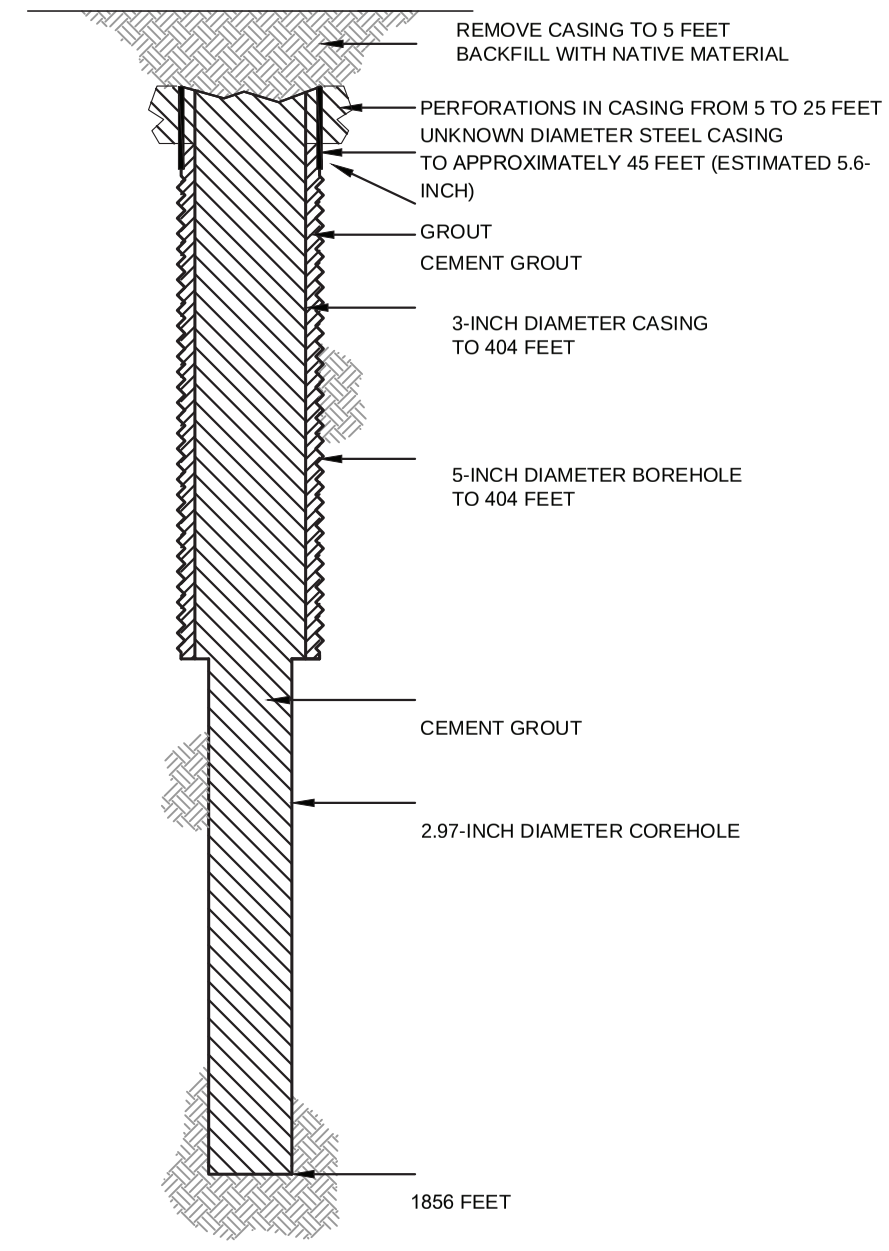

HALEY ALDRICH

FLORENCE COPPER, INC.
FLORENCE, ARIZONA

COREHOLE 511MF DIAGRAM

FLORENCE COPPER INC.

NOT TO SCALE
SEPTEMBER 2019

FIGURE 1

MOBINI, GITA Printed: 4/21/2017 12:00 PM Layout: ABANDON (2)
\PROJECTS\CURIS RESOURCES38706-CURIS FEASIBILITY\DRAWINGS\EPA\WELL ABANDON\415S_ABANDON.DWG

OMB No. 2040-0042 Approval Expires 4/30/2022

United States Environmental Protection Agency

EPA

WELL REWORK RECORD, PLUGGING AND ABANDONMENT PLAN, OR PLUGGING AND ABANDONMENT AFFIDAVIT

Name and Address, Phone Number and/or Email of Permittee

Florence Copper Project
1575 W Hunt Hwy,
Florence, AZ 85132

Permit or EPA ID Number	API Number	Full Well Name
R9UIC-AZ3-FY11-1		512MF

State	County
Arizona	Pinal

Locate well in two directions from nearest lines of quarter section and drilling unit

Surface Location

NW 1/4 of NW 1/4 of Section 33 Township 4S Range 9E

Latitude 33.04322226

Longitude -111.4342718

_____ ft. from (N/S) _____ Line of quarter section

_____ ft. from (E/W) _____ Line of quarter section.

Well Class	Timing of Action (pick one)	Type of Action (pick one)
☐ Class I ☐ Class II ☑ Class III ☐ Class V	☑ Notice Prior to Work Date Expected to Commence March 2021 ☐ Report After Work Date Work Ended	☐ Well Rework ☑ Plugging and Abandonment ☐ Conversion to a Non-Injection Well

Provide a narrative description of the work planned to be performed, or that was performed. Use additional pages as necessary. See instructions.

A workover rig capable of performing the required abandonment operations at the required depths will be moved in and set up over the core hole. The core hole will be inspected to determine the depth to which the hole remains open and if any obstructions are present in the core hole; the presence and condition of any existing collar will also be documented. If necessary, the core hole will be cleaned out to a depth of at least 100 feet below the bedrock-LBFU contact to enable placement of cement seals.

If collar is present, an attempt will be made to remove it. If removal of the collar is not feasible, it will be left in the hole and perforated as needed to allow an annular seal to be placed to a depth of at least 25 feet bgs. In areas of agricultural use, the surface casing will be cut at least 5 feet bgs and removed.

If the collar cannot be removed, it will be perforated from at least 20 feet below the bedrock-LBFU contact to at least 20 feet above the contact; from at least 20 feet below the base of the MFGU to at least 20 feet above the top of the MFGU; and from at least 25 feet bgs to 5 feet bgs.

A tremie pipe will be used to place Type V cement in the open core hole from the bottom of the core hole to the top of the core hole. Cement retainers, as described above, will be used to force cement grout into the annulus and behind perforated intervals, as necessary.

If the hole has been obstructed, as much cement as possible will be placed from 100 feet below the LBFU-bedrock contact to the top of the core hole.

The volume of Type V cement will be recorded and will not be less than the estimated volume of material required to fill each interval. All cement grout will consist of Type V cement, or equivalent approved in accordance with the UIC Permit.

Certification

I certify under the penalty of law that I have personally examined and am familiar with the information submitted in this document and all attachments and that, based on my inquiry of those individuals immediately responsible for obtaining the information, I believe that the information is true, accurate, and complete. I am aware that there are significant penalties for submitting false information, including the possibliity of fine and imprisonment. (Ref. 40 CFR § 144.32)

Name and Official Title *(Please type or print)*	Signature	Date Signed
Dan Johnson, VP - General Manager		10/3/2019

INSTRUCTIONS FOR FORM 7520-19

This form replaces forms 7520-12 and 7520-14. Use this form only when work is planned or has occurred that affects the well's construction or operation as an injection well, including work on the casing, tubing or packer (or for shallow Class V wells, the subsurface fluid emplacement network). Use one form per injection well. While reports or other information developed by contractors or service companies may be attached, this form must be signed by a responsible entity as described at 40 CFR 144.32. Note: operators closing Class V wells should use Form 7520-17.

NAME, ADDRESS, PHONE AND/OR EMAIL OF PERMITTEE: Enter the name and street address, city/town, state, and ZIP code of the permittee. Also provide an email address (if available) and/or a phone number.

PERMIT OR EPA ID NUMBER: Enter the well identification number or permit number assigned to the well by the EPA or the permitting authority.

API NUMBER: Enter the number assigned by the local jurisdiction (usually a State Oil and Gas Agency) using the American Petroleum Institute standard numbering system.

FULL WELL NAME: Enter the full name of the well or project.

Enter the **STATE** and **COUNTY** where the well is located. For States that do not have counties, use the name of that State's equivalent jurisdiction at a more local level.

WELL LOCATION: Fill in the complete township, range, and section to the nearest quarter-quarter section. A township is north or south of the baseline, and a range is east or west of the principal meridian (e.g., T12N, R34W). Also include the distance, in feet, from the nearest north or south line and nearest east or west line of the quarter-section. Also, enter the **latitude** and **longitude** of the well in decimal degrees, to five or six places if possible; be sure to include a negative sign for the longitude of a well in the Western Hemisphere and a negative sign for the latitude of a well in the Southern Hemisphere.

Enter the **WELL CLASS,** i.e., the class of injection well as defined in 40 CFR 144.6.

TIMING OF THE ACTION: Check ***Notice prior to work*** if the activity has not yet occurred (i.e., is planned). Check ***Report after work*** if the activity described has already occurred. As appropriate, include the date the activity is expected to start or the date the activity was completed. (Note this may not be available, e.g., for a plugging plan submitted with a permit application.)

TYPE OF ACTION: Check the appropriate box to describe the kind of activity being reported. Check ***Well Rework*** for work that was/will be performed on the well after it has already been in operation as an injection well. Check ***Plugging and Abandonment*** to report on plans for or descriptions of final closure/plugging after use as an injection well. Check ***Conversion to a Non-Injection Well*** if the well is to be converted to something other than an injection well.

Provide a **NARRATIVE DESCRIPTION** of the work planned to be performed, or that was performed. The narrative should include a description of the main procedures planned or that occurred during the work activity. A service company report, daily report, or similar document may be attached if it includes all the requested information and is clear and legible.

For well reworks, include the following information: The reason for the well rework; depths of activity; type of activity; changes to injection well configuration, well casing, or cement behind casing; any plug added to the well and its depth; any newly drilled interval and its depth; method(s) to demonstrate that the well has mechanical integrity (as applicable); and any deviations from the approved rework plan (as applicable).

For a well plugging plan, include the following information: Reason for the well plugging; number of plugs placed, and their depths; materials used as plugs (e.g., cast iron bridge plug, cement, cement retainer); method to set plugs; and wait-on-cement times, if any. Also provide one or more cost estimates from an independent firm in the business of plugging and abandoning wells to plug the well as described in the plan.

For well plugging affidavit, include the following information: Reason for the well plugging; number of plugs placed, and their depths; materials used as plugs (e.g., cast iron bridge plug, cement, cement retainer); method to set plugs; wait-on-cement times, if any; and any deviations from the approved plugging plan (if applicable).

For conversion to a non-injection well, include the following information: Depths of activity; type of activity; changes to injection well configuration, well casing, or cement behind casing; any plug added to the well and its depth; any newly drilled interval and its depth; depths of new perforations; and method(s) to demonstrate that the well has mechanical integrity (as applicable).

For all of the above activities, include a well sketch depicting the work, results of well tests/logging performed, service company tickets, and any other available information demonstrating how the work was/is to be performed. Also, specify whether depths are below ground surface, relative to Kelly bushing, etc.

CERTIFICATION: This form must be signed and dated by either: a responsible corporate officer for a corporation, by a general partner for a partnership, by the proprietor of a sole proprietorship, or by a principal executive or ranking elected official for a public agency.

PAPERWORK REDUCTION ACT NOTICE: The public reporting and recordkeeping burden for this collection of information is estimated to average between 6.0 and 7.9 hours per response, depending on the injection well class. Burden means the total time, effort, or financial resource expended by persons to generate, maintain, retain, or disclose or provide information to or for a Federal Agency. This includes the time needed to review instructions; develop, acquire, install, and utilize technology and systems for the purposes of collecting, validating, and verifying information, processing and maintaining information, and disclosing and providing information; adjust the existing ways to comply with any previously applicable instructions and requirements; train personnel to be able to respond to the collection of information; search data sources; complete and review the collection of information; and, transmit or otherwise disclose the information. An agency may not conduct or sponsor, and a person is not required to respond to, a collection of information unless it displays a currently valid OMB control number. Send comments on the Agency's need for this information, the accuracy of the provided burden estimates, and any suggested methods for minimizing respondent burden, including the use of automated collection techniques to Director, Collection Strategies Division, U.S. Environmental Protection Agency (2822), 1200 Pennsylvania Ave., NW., Washington, D.C. 20460. Include the OMB control number in any correspondence. Do not send the completed forms to this address.

AS-BUILT COREHOLE 512MF

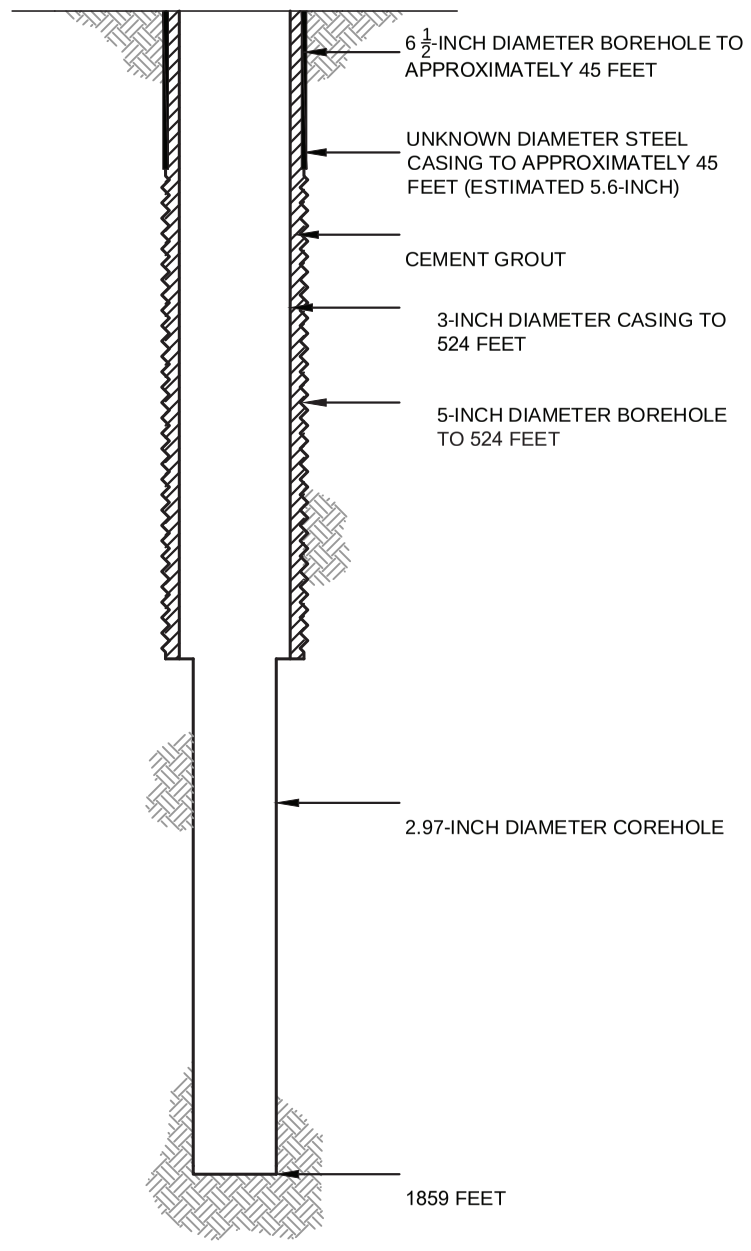

PROPOSED PLUGGING AND ABANDONMENT COREHOLE 512MF

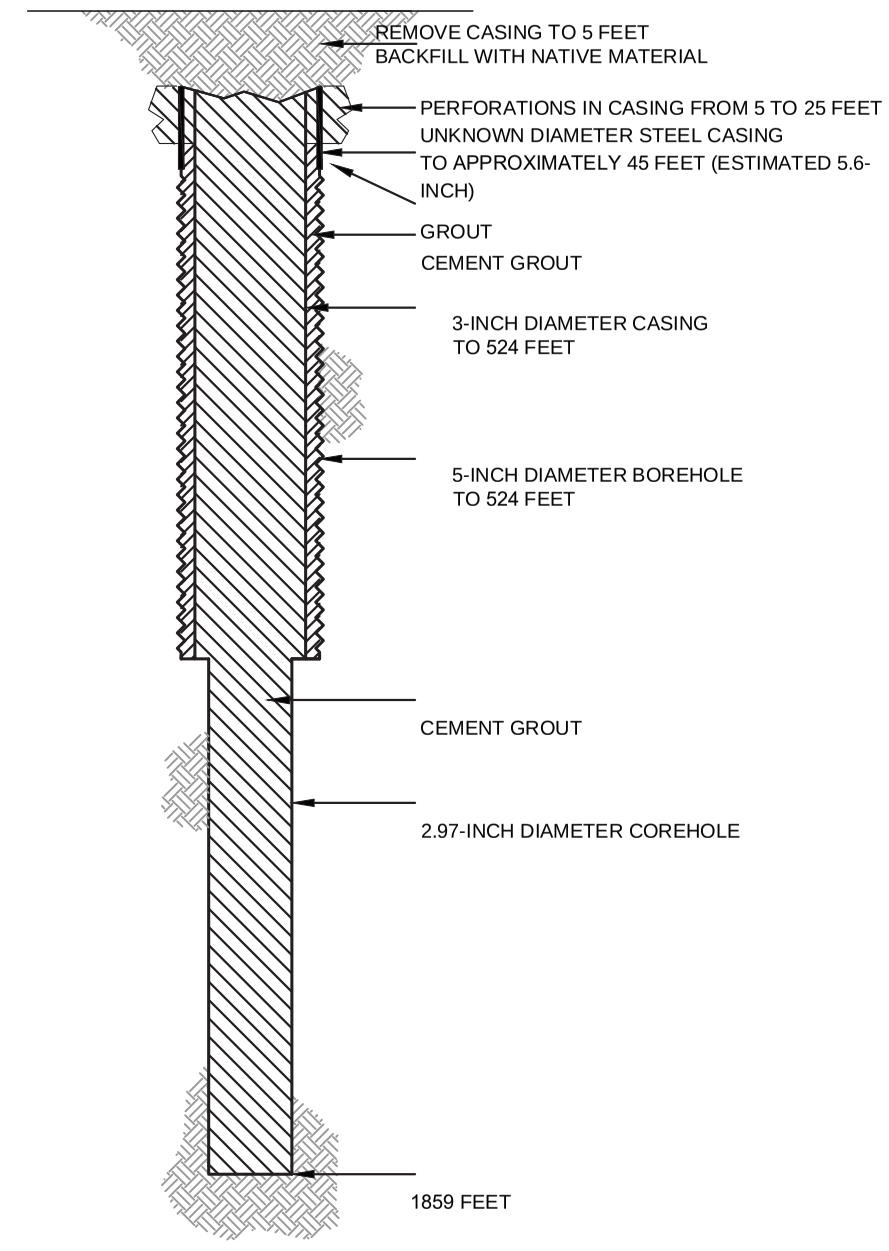

HALEY ALDRICH

FLORENCE COPPER, INC.
FLORENCE, ARIZONA

COREHOLE 512MF DIAGRAM

FLORENCE COPPER INC.

NOT TO SCALE
SEPTEMBER 2019

FIGURE 1

MOBINI, GITA Printed: 4/21/2017 12:00 PM Layout: ABANDON (2)
\PROJECTS\CURIS RESOURCES38706-CURIS FEASIBILITY\DRAWINGS\EPA\WELL ABANDON\415S_ABANDON.DWG

OMB No. 2040-0042 Approval Expires 4/30/2022

United States Environmental Protection Agency

WELL REWORK RECORD, PLUGGING AND ABANDONMENT PLAN, OR PLUGGING AND ABANDONMENT AFFIDAVIT

Name and Address, Phone Number and/or Email of Permittee

Florence Copper Project
1575 W Hunt Hwy,
Florence, AZ 85132

Permit or EPA ID Number	API Number	Full Well Name
R9UIC-AZ3-FY11-1		513MF

State	County
Arizona	Pinal

Locate well in two directions from nearest lines of quarter section and drilling unit

Latitude 33.04322541

Surface Location

NW **1/4 of** NW **1/4 of Section** 33 **Township** 4S **Range** 9E

Longitude -111.4350877

_____ **ft. from (N/S)** _____ **Line of quarter section**

_____ **ft. from (E/W)** _____ **Line of quarter section.**

Well Class	Timing of Action (pick one)	Type of Action (pick one)
☐ Class I ☐ Class II ☑ Class III ☐ Class V	☑ Notice Prior to Work Date Expected to Commence March 2021 ☐ Report After Work Date Work Ended	☐ Well Rework ☑ Plugging and Abandonment ☐ Conversion to a Non-Injection Well

Provide a narrative description of the work planned to be performed, or that was performed. Use additional pages as necessary. See instructions.

A workover rig capable of performing the required abandonment operations at the required depths will be moved in and set up over the core hole. The core hole will be inspected to determine the depth to which the hole remains open and if any obstructions are present in the core hole; the presence and condition of any existing collar will also be documented. If necessary, the core hole will be cleaned out to a depth of at least 100 feet below the bedrock-LBFU contact to enable placement of cement seals.

If collar is present, an attempt will be made to remove it. If removal of the collar is not feasible, it will be left in the hole and perforated as needed to allow an annular seal to be placed to a depth of at least 25 feet bgs. In areas of agricultural use, the surface casing will be cut at least 5 feet bgs and removed.

If the collar cannot be removed, it will be perforated from at least 20 feet below the bedrock-LBFU contact to at least 20 feet above the contact; from at least 20 feet below the base of the MFGU to at least 20 feet above the top of the MFGU; and from at least 25 feet bgs to 5 feet bgs.

A tremie pipe will be used to place Type V cement in the open core hole from the bottom of the core hole to the top of the core hole. Cement retainers, as described above, will be used to force cement grout into the annulus and behind perforated intervals, as necessary.

If the hole has been obstructed, as much cement as possible will be placed from 100 feet below the LBFU-bedrock contact to the top of the core hole.

The volume of Type V cement will be recorded and will not be less than the estimated volume of material required to fill each interval. All cement grout will consist of Type V cement, or equivalent approved in accordance with the UIC Permit.

Certification

I certify under the penalty of law that I have personally examined and am familiar with the information submitted in this document and all attachments and that, based on my inquiry of those individuals immediately responsible for obtaining the information, I believe that the information is true, accurate, and complete. I am aware that there are significant penalties for submitting false information, including the possibliity of fine and imprisonment. (Ref. 40 CFR § 144.32)

Name and Official Title *(Please type or print)*	Signature	Date Signed
Dan Johnson, VP - General Manager		10/3/2019

INSTRUCTIONS FOR FORM 7520-19

This form replaces forms 7520-12 and 7520-14. Use this form only when work is planned or has occurred that affects the well's construction or operation as an injection well, including work on the casing, tubing or packer (or for shallow Class V wells, the subsurface fluid emplacement network). Use one form per injection well. While reports or other information developed by contractors or service companies may be attached, this form must be signed by a responsible entity as described at 40 CFR 144.32. Note: operators closing Class V wells should use Form 7520-17.

NAME, ADDRESS, PHONE AND/OR EMAIL OF PERMITTEE: Enter the name and street address, city/town, state, and ZIP code of the permittee. Also provide an email address (if available) and/or a phone number.

PERMIT OR EPA ID NUMBER: Enter the well identification number or permit number assigned to the well by the EPA or the permitting authority.

API NUMBER: Enter the number assigned by the local jurisdiction (usually a State Oil and Gas Agency) using the American Petroleum Institute standard numbering system.

FULL WELL NAME: Enter the full name of the well or project.

Enter the **STATE** and **COUNTY** where the well is located. For States that do not have counties, use the name of that State's equivalent jurisdiction at a more local level.

WELL LOCATION: Fill in the complete township, range, and section to the nearest quarter-quarter section. A township is north or south of the baseline, and a range is east or west of the principal meridian (e.g., T12N, R34W). Also include the distance, in feet, from the nearest north or south line and nearest east or west line of the quarter-section. Also, enter the **latitude** and **longitude** of the well in decimal degrees, to five or six places if possible; be sure to include a negative sign for the longitude of a well in the Western Hemisphere and a negative sign for the latitude of a well in the Southern Hemisphere.

Enter the **WELL CLASS,** i.e., the class of injection well as defined in 40 CFR 144.6.

TIMING OF THE ACTION: Check ***Notice prior to work*** if the activity has not yet occurred (i.e., is planned). Check ***Report after work*** if the activity described has already occurred. As appropriate, include the date the activity is expected to start or the date the activity was completed. (Note this may not be available, e.g., for a plugging plan submitted with a permit application.)

TYPE OF ACTION: Check the appropriate box to describe the kind of activity being reported. Check ***Well Rework*** for work that was/will be performed on the well after it has already been in operation as an injection well. Check ***Plugging and Abandonment*** to report on plans for or descriptions of final closure/plugging after use as an injection well. Check ***Conversion to a Non-Injection Well*** if the well is to be converted to something other than an injection well.

Provide a **NARRATIVE DESCRIPTION** of the work planned to be performed, or that was performed. The narrative should include a description of the main procedures planned or that occurred during the work activity. A service company report, daily report, or similar document may be attached if it includes all the requested information and is clear and legible.

For well reworks, include the following information: The reason for the well rework; depths of activity; type of activity; changes to injection well configuration, well casing, or cement behind casing; any plug added to the well and its depth; any newly drilled interval and its depth; method(s) to demonstrate that the well has mechanical integrity (as applicable); and any deviations from the approved rework plan (as applicable).

For a well plugging plan, include the following information: Reason for the well plugging; number of plugs placed, and their depths; materials used as plugs (e.g., cast iron bridge plug, cement, cement retainer); method to set plugs; and wait-on-cement times, if any. Also provide one or more cost estimates from an independent firm in the business of plugging and abandoning wells to plug the well as described in the plan.

For well plugging affidavit, include the following information: Reason for the well plugging; number of plugs placed, and their depths; materials used as plugs (e.g., cast iron bridge plug, cement, cement retainer); method to set plugs; wait-on-cement times, if any; and any deviations from the approved plugging plan (if applicable).

For conversion to a non-injection well, include the following information: Depths of activity; type of activity; changes to injection well configuration, well casing, or cement behind casing; any plug added to the well and its depth; any newly drilled interval and its depth; depths of new perforations; and method(s) to demonstrate that the well has mechanical integrity (as applicable).

For all of the above activities, include a well sketch depicting the work, results of well tests/logging performed, service company tickets, and any other available information demonstrating how the work was/is to be performed. Also, specify whether depths are below ground surface, relative to Kelly bushing, etc.

CERTIFICATION: This form must be signed and dated by either: a responsible corporate officer for a corporation, by a general partner for a partnership, by the proprietor of a sole proprietorship, or by a principal executive or ranking elected official for a public agency.

PAPERWORK REDUCTION ACT NOTICE: The public reporting and recordkeeping burden for this collection of information is estimated to average between 6.0 and 7.9 hours per response, depending on the injection well class. Burden means the total time, effort, or financial resource expended by persons to generate, maintain, retain, or disclose or provide information to or for a Federal Agency. This includes the time needed to review instructions; develop, acquire, install, and utilize technology and systems for the purposes of collecting, validating, and verifying information, processing and maintaining information, and disclosing and providing information; adjust the existing ways to comply with any previously applicable instructions and requirements; train personnel to be able to respond to the collection of information; search data sources; complete and review the collection of information; and, transmit or otherwise disclose the information. An agency may not conduct or sponsor, and a person is not required to respond to, a collection of information unless it displays a currently valid OMB control number. Send comments on the Agency's need for this information, the accuracy of the provided burden estimates, and any suggested methods for minimizing respondent burden, including the use of automated collection techniques to Director, Collection Strategies Division, U.S. Environmental Protection Agency (2822), 1200 Pennsylvania Ave., NW., Washington, D.C. 20460. Include the OMB control number in any correspondence. Do not send the completed forms to this address.

OMB No. 2040-0042 Approval Expires 4/30/2022

United States Environmental Protection Agency

EPA

WELL REWORK RECORD, PLUGGING AND ABANDONMENT PLAN, OR PLUGGING AND ABANDONMENT AFFIDAVIT

Name and Address, Phone Number and/or Email of Permittee

Florence Copper Project
1575 W Hunt Hwy,
Florence, AZ 85132

Permit or EPA ID Number	API Number	Full Well Name
R9UIC-AZ3-FY11-1		516MF

State	County
Arizona	Pinal

Locate well in two directions from nearest lines of quarter section and drilling unit

Surface Location

NW 1/4 of NW 1/4 of Section 33 Township 4S Range 9E

Latitude 33.04322773

Longitude -111.4359035

_____ ft. from (N/S) _____ Line of quarter section

_____ ft. from (E/W) _____ Line of quarter section.

Well Class	Timing of Action (pick one)	Type of Action (pick one)
☐ Class I ☐ Class II ☑ Class III ☐ Class V	☑ Notice Prior to Work Date Expected to Commence March 2021 ☐ Report After Work Date Work Ended	☐ Well Rework ☑ Plugging and Abandonment ☐ Conversion to a Non-Injection Well

Provide a narrative description of the work planned to be performed, or that was performed. Use additional pages as necessary. See instructions.

A workover rig capable of performing the required abandonment operations at the required depths will be moved in and set up over the core hole. The core hole will be inspected to determine the depth to which the hole remains open and if any obstructions are present in the core hole; the presence and condition of any existing collar will also be documented. If necessary, the core hole will be cleaned out to a depth of at least 100 feet below the bedrock-LBFU contact to enable placement of cement seals.

If collar is present, an attempt will be made to remove it. If removal of the collar is not feasible, it will be left in the hole and perforated as needed to allow an annular seal to be placed to a depth of at least 25 feet bgs. In areas of agricultural use, the surface casing will be cut at least 5 feet bgs and removed.

If the collar cannot be removed, it will be perforated from at least 20 feet below the bedrock-LBFU contact to at least 20 feet above the contact; from at least 20 feet below the base of the MFGU to at least 20 feet above the top of the MFGU; and from at least 25 feet bgs to 5 feet bgs.

A tremie pipe will be used to place Type V cement in the open core hole from the bottom of the core hole to the top of the core hole. Cement retainers, as described above, will be used to force cement grout into the annulus and behind perforated intervals, as necessary.

If the hole has been obstructed, as much cement as possible will be placed from 100 feet below the LBFU-bedrock contact to the top of the core hole.

The volume of Type V cement will be recorded and will not be less than the estimated volume of material required to fill each interval. All cement grout will consist of Type V cement, or equivalent approved in accordance with the UIC Permit.

Certification

I certify under the penalty of law that I have personally examined and am familiar with the information submitted in this document and all attachments and that, based on my inquiry of those individuals immediately responsible for obtaining the information, I believe that the information is true, accurate, and complete. I am aware that there are significant penalties for submitting false information, including the possibliity of fine and imprisonment. (Ref. 40 CFR § 144.32)

Name and Official Title *(Please type or print)*	Signature	Date Signed
Dan Johnson, VP - General Manager		10/3/2019

INSTRUCTIONS FOR FORM 7520-19

This form replaces forms 7520-12 and 7520-14. Use this form only when work is planned or has occurred that affects the well's construction or operation as an injection well, including work on the casing, tubing or packer (or for shallow Class V wells, the subsurface fluid emplacement network). Use one form per injection well. While reports or other information developed by contractors or service companies may be attached, this form must be signed by a responsible entity as described at 40 CFR 144.32. Note: operators closing Class V wells should use Form 7520-17.

NAME, ADDRESS, PHONE AND/OR EMAIL OF PERMITTEE: Enter the name and street address, city/town, state, and ZIP code of the permittee. Also provide an email address (if available) and/or a phone number.

PERMIT OR EPA ID NUMBER: Enter the well identification number or permit number assigned to the well by the EPA or the permitting authority.

API NUMBER: Enter the number assigned by the local jurisdiction (usually a State Oil and Gas Agency) using the American Petroleum Institute standard numbering system.

FULL WELL NAME: Enter the full name of the well or project.

Enter the **STATE** and **COUNTY** where the well is located. For States that do not have counties, use the name of that State's equivalent jurisdiction at a more local level.

WELL LOCATION: Fill in the complete township, range, and section to the nearest quarter-quarter section. A township is north or south of the baseline, and a range is east or west of the principal meridian (e.g., T12N, R34W). Also include the distance, in feet, from the nearest north or south line and nearest east or west line of the quarter-section. Also, enter the **latitude** and **longitude** of the well in decimal degrees, to five or six places if possible; be sure to include a negative sign for the longitude of a well in the Western Hemisphere and a negative sign for the latitude of a well in the Southern Hemisphere.

Enter the **WELL CLASS,** i.e., the class of injection well as defined in 40 CFR 144.6.

TIMING OF THE ACTION: Check ***Notice prior to work*** if the activity has not yet occurred (i.e., is planned). Check ***Report after work*** if the activity described has already occurred. As appropriate, include the date the activity is expected to start or the date the activity was completed. (Note this may not be available, e.g., for a plugging plan submitted with a permit application.)

TYPE OF ACTION: Check the appropriate box to describe the kind of activity being reported. Check ***Well Rework*** for work that was/will be performed on the well after it has already been in operation as an injection well. Check ***Plugging and Abandonment*** to report on plans for or descriptions of final closure/plugging after use as an injection well. Check ***Conversion to a Non-Injection Well*** if the well is to be converted to something other than an injection well.

Provide a **NARRATIVE DESCRIPTION** of the work planned to be performed, or that was performed. The narrative should include a description of the main procedures planned or that occurred during the work activity. A service company report, daily report, or similar document may be attached if it includes all the requested information and is clear and legible.

For well reworks, include the following information: The reason for the well rework; depths of activity; type of activity; changes to injection well configuration, well casing, or cement behind casing; any plug added to the well and its depth; any newly drilled interval and its depth; method(s) to demonstrate that the well has mechanical integrity (as applicable); and any deviations from the approved rework plan (as applicable).

For a well plugging plan, include the following information: Reason for the well plugging; number of plugs placed, and their depths; materials used as plugs (e.g., cast iron bridge plug, cement, cement retainer); method to set plugs; and wait-on-cement times, if any. Also provide one or more cost estimates from an independent firm in the business of plugging and abandoning wells to plug the well as described in the plan.

For well plugging affidavit, include the following information: Reason for the well plugging; number of plugs placed, and their depths; materials used as plugs (e.g., cast iron bridge plug, cement, cement retainer); method to set plugs; wait-on-cement times, if any; and any deviations from the approved plugging plan (if applicable).

For conversion to a non-injection well, include the following information: Depths of activity; type of activity; changes to injection well configuration, well casing, or cement behind casing; any plug added to the well and its depth; any newly drilled interval and its depth; depths of new perforations; and method(s) to demonstrate that the well has mechanical integrity (as applicable).

For all of the above activities, include a well sketch depicting the work, results of well tests/logging performed, service company tickets, and any other available information demonstrating how the work was/is to be performed. Also, specify whether depths are below ground surface, relative to Kelly bushing, etc.

CERTIFICATION: This form must be signed and dated by either: a responsible corporate officer for a corporation, by a general partner for a partnership, by the proprietor of a sole proprietorship, or by a principal executive or ranking elected official for a public agency.

PAPERWORK REDUCTION ACT NOTICE: The public reporting and recordkeeping burden for this collection of information is estimated to average between 6.0 and 7.9 hours per response, depending on the injection well class. Burden means the total time, effort, or financial resource expended by persons to generate, maintain, retain, or disclose or provide information to or for a Federal Agency. This includes the time needed to review instructions; develop, acquire, install, and utilize technology and systems for the purposes of collecting, validating, and verifying information, processing and maintaining information, and disclosing and providing information; adjust the existing ways to comply with any previously applicable instructions and requirements; train personnel to be able to respond to the collection of information; search data sources; complete and review the collection of information; and, transmit or otherwise disclose the information. An agency may not conduct or sponsor, and a person is not required to respond to, a collection of information unless it displays a currently valid OMB control number. Send comments on the Agency's need for this information, the accuracy of the provided burden estimates, and any suggested methods for minimizing respondent burden, including the use of automated collection techniques to Director, Collection Strategies Division, U.S. Environmental Protection Agency (2822), 1200 Pennsylvania Ave., NW., Washington, D.C. 20460. Include the OMB control number in any correspondence. Do not send the completed forms to this address.

AS-BUILT COREHOLE 516MF

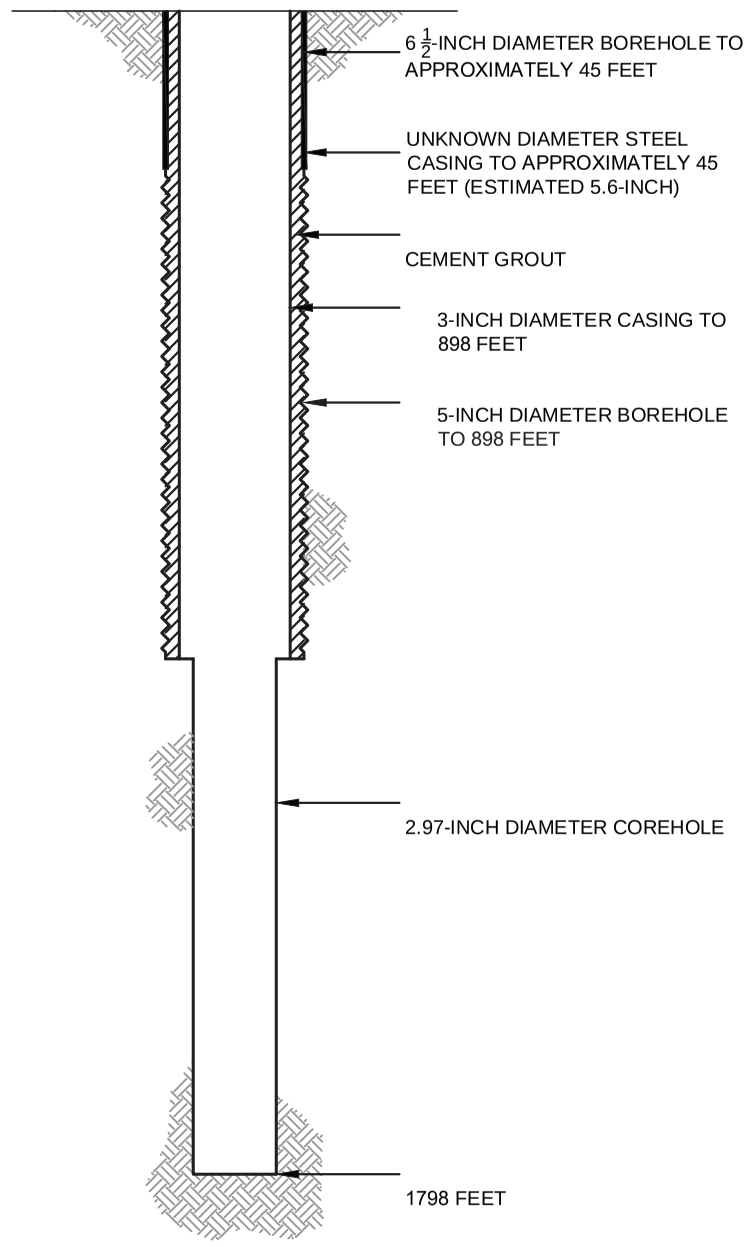

PROPOSED PLUGGING AND ABANDONMENT COREHOLE 516MF

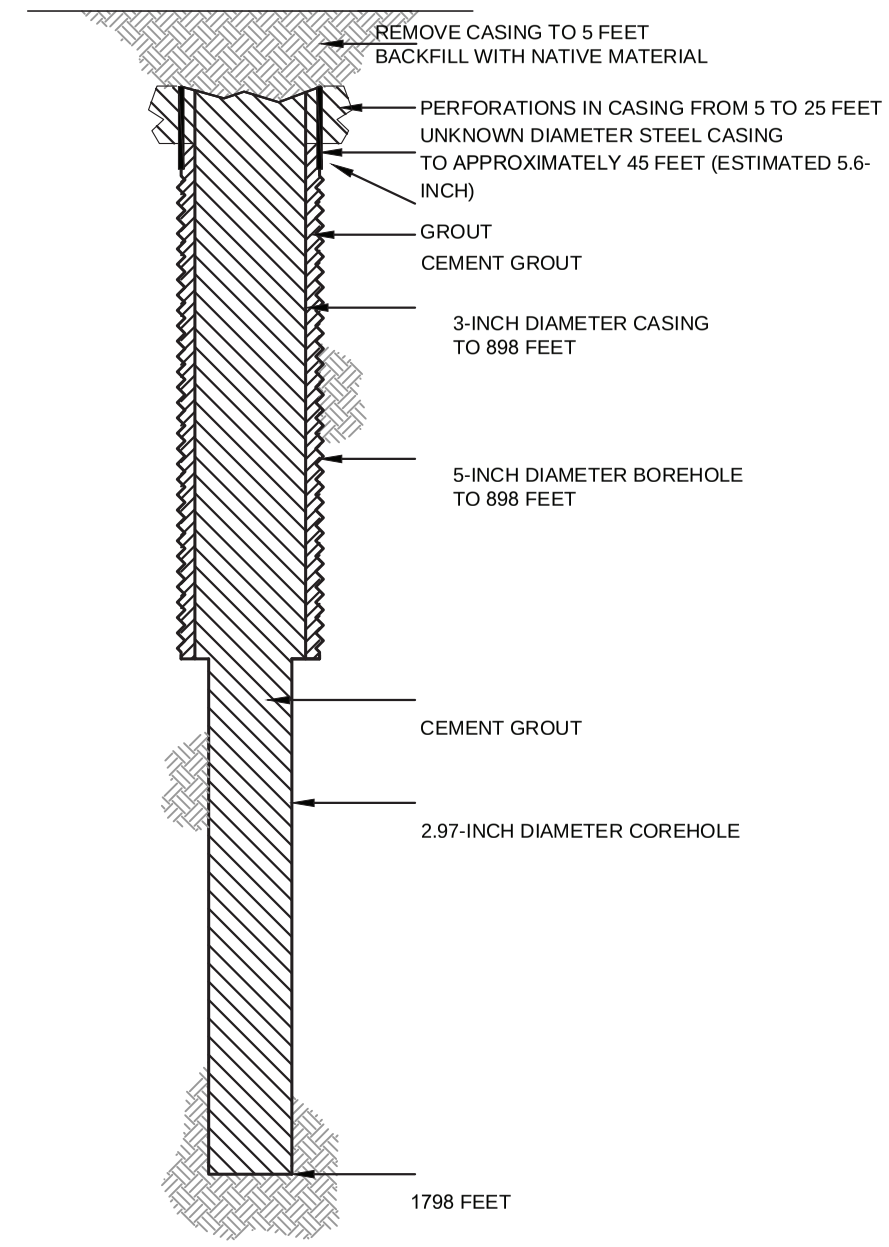

HALEY ALDRICH

FLORENCE COPPER, INC.
FLORENCE, ARIZONA

COREHOLE 516MF DIAGRAM

FLORENCE COPPER INC.

NOT TO SCALE
SEPTEMBER 2019

FIGURE 1

MOBINI, GITA Printed: 4/21/2017 12:00 PM Layout: ABANDON (2)
\PROJECTS\CURIS RESOURCES38706-CURIS FEASIBILITY\DRAWINGS\EPA\WELL ABANDON\415S_ABANDON.DWG

OMB No. 2040-0042 Approval Expires 4/30/2022

United States Environmental Protection Agency

EPA

WELL REWORK RECORD, PLUGGING AND ABANDONMENT PLAN, OR PLUGGING AND ABANDONMENT AFFIDAVIT

Name and Address, Phone Number and/or Email of Permittee

Florence Copper Project
1575 W Hunt Hwy,
Florence, AZ 85132

Permit or EPA ID Number	API Number	Full Well Name
R9UIC-AZ3-FY11-1		518MF

State	County
Arizona	Pinal

Locate well in two directions from nearest lines of quarter section and drilling unit

Latitude 33.04561113

Longitude -111.4367077

Surface Location

NW **1/4 of** NW **1/4 of Section** 33 **Township** 4S **Range** 9E

_____ **ft. from (N/S)** _____ **Line of quarter section**

_____ **ft. from (E/W)** _____ **Line of quarter section.**

Well Class	Timing of Action (pick one)	Type of Action (pick one)
☐ Class I ☐ Class II ☑ Class III ☐ Class V	☑ Notice Prior to Work Date Expected to Commence March 2021 ☐ Report After Work Date Work Ended	☐ Well Rework ☑ Plugging and Abandonment ☐ Conversion to a Non-Injection Well

Provide a narrative description of the work planned to be performed, or that was performed. Use additional pages as necessary. See instructions.

A workover rig capable of performing the required abandonment operations at the required depths will be moved in and set up over the core hole. The core hole will be inspected to determine the depth to which the hole remains open and if any obstructions are present in the core hole; the presence and condition of any existing collar will also be documented. If necessary, the core hole will be cleaned out to a depth of at least 100 feet below the bedrock-LBFU contact to enable placement of cement seals.

If collar is present, an attempt will be made to remove it. If removal of the collar is not feasible, it will be left in the hole and perforated as needed to allow an annular seal to be placed to a depth of at least 25 feet bgs. In areas of agricultural use, the surface casing will be cut at least 5 feet bgs and removed.

If the collar cannot be removed, it will be perforated from at least 20 feet below the bedrock-LBFU contact to at least 20 feet above the contact; from at least 20 feet below the base of the MFGU to at least 20 feet above the top of the MFGU; and from at least 25 feet bgs to 5 feet bgs.

A tremie pipe will be used to place Type V cement in the open core hole from the bottom of the core hole to the top of the core hole. Cement retainers, as described above, will be used to force cement grout into the annulus and behind perforated intervals, as necessary.

If the hole has been obstructed, as much cement as possible will be placed from 100 feet below the LBFU-bedrock contact to the top of the core hole.

The volume of Type V cement will be recorded and will not be less than the estimated volume of material required to fill each interval. All cement grout will consist of Type V cement, or equivalent approved in accordance with the UIC Permit.

Certification

I certify under the penalty of law that I have personally examined and am familiar with the information submitted in this document and all attachments and that, based on my inquiry of those individuals immediately responsible for obtaining the information, I believe that the information is true, accurate, and complete. I am aware that there are significant penalties for submitting false information, including the possibliity of fine and imprisonment. (Ref. 40 CFR § 144.32)

Name and Official Title *(Please type or print)*	Signature	Date Signed
Dan Johnson, VP - General Manager		10/3/2019

INSTRUCTIONS FOR FORM 7520-19

This form replaces forms 7520-12 and 7520-14. Use this form only when work is planned or has occurred that affects the well's construction or operation as an injection well, including work on the casing, tubing or packer (or for shallow Class V wells, the subsurface fluid emplacement network). Use one form per injection well. While reports or other information developed by contractors or service companies may be attached, this form must be signed by a responsible entity as described at 40 CFR 144.32. Note: operators closing Class V wells should use Form 7520-17.

NAME, ADDRESS, PHONE AND/OR EMAIL OF PERMITTEE: Enter the name and street address, city/town, state, and ZIP code of the permittee. Also provide an email address (if available) and/or a phone number.

PERMIT OR EPA ID NUMBER: Enter the well identification number or permit number assigned to the well by the EPA or the permitting authority.

API NUMBER: Enter the number assigned by the local jurisdiction (usually a State Oil and Gas Agency) using the American Petroleum Institute standard numbering system.

FULL WELL NAME: Enter the full name of the well or project.

Enter the **STATE** and **COUNTY** where the well is located. For States that do not have counties, use the name of that State's equivalent jurisdiction at a more local level.

WELL LOCATION: Fill in the complete township, range, and section to the nearest quarter-quarter section. A township is north or south of the baseline, and a range is east or west of the principal meridian (e.g., T12N, R34W). Also include the distance, in feet, from the nearest north or south line and nearest east or west line of the quarter-section. Also, enter the **latitude** and **longitude** of the well in decimal degrees, to five or six places if possible; be sure to include a negative sign for the longitude of a well in the Western Hemisphere and a negative sign for the latitude of a well in the Southern Hemisphere.

Enter the **WELL CLASS,** i.e., the class of injection well as defined in 40 CFR 144.6.

TIMING OF THE ACTION: Check ***Notice prior to work*** if the activity has not yet occurred (i.e., is planned). Check ***Report after work*** if the activity described has already occurred. As appropriate, include the date the activity is expected to start or the date the activity was completed. (Note this may not be available, e.g., for a plugging plan submitted with a permit application.)

TYPE OF ACTION: Check the appropriate box to describe the kind of activity being reported. Check ***Well Rework*** for work that was/will be performed on the well after it has already been in operation as an injection well. Check ***Plugging and Abandonment*** to report on plans for or descriptions of final closure/plugging after use as an injection well. Check ***Conversion to a Non-Injection Well*** if the well is to be converted to something other than an injection well.

Provide a **NARRATIVE DESCRIPTION** of the work planned to be performed, or that was performed. The narrative should include a description of the main procedures planned or that occurred during the work activity. A service company report, daily report, or similar document may be attached if it includes all the requested information and is clear and legible.

For well reworks, include the following information: The reason for the well rework; depths of activity; type of activity; changes to injection well configuration, well casing, or cement behind casing; any plug added to the well and its depth; any newly drilled interval and its depth; method(s) to demonstrate that the well has mechanical integrity (as applicable); and any deviations from the approved rework plan (as applicable).

For a well plugging plan, include the following information: Reason for the well plugging; number of plugs placed, and their depths; materials used as plugs (e.g., cast iron bridge plug, cement, cement retainer); method to set plugs; and wait-on-cement times, if any. Also provide one or more cost estimates from an independent firm in the business of plugging and abandoning wells to plug the well as described in the plan.

For well plugging affidavit, include the following information: Reason for the well plugging; number of plugs placed, and their depths; materials used as plugs (e.g., cast iron bridge plug, cement, cement retainer); method to set plugs; wait-on-cement times, if any; and any deviations from the approved plugging plan (if applicable).

For conversion to a non-injection well, include the following information: Depths of activity; type of activity; changes to injection well configuration, well casing, or cement behind casing; any plug added to the well and its depth; any newly drilled interval and its depth; depths of new perforations; and method(s) to demonstrate that the well has mechanical integrity (as applicable).

For all of the above activities, include a well sketch depicting the work, results of well tests/logging performed, service company tickets, and any other available information demonstrating how the work was/is to be performed. Also, specify whether depths are below ground surface, relative to Kelly bushing, etc.

CERTIFICATION: This form must be signed and dated by either: a responsible corporate officer for a corporation, by a general partner for a partnership, by the proprietor of a sole proprietorship, or by a principal executive or ranking elected official for a public agency.

PAPERWORK REDUCTION ACT NOTICE: The public reporting and recordkeeping burden for this collection of information is estimated to average between 6.0 and 7.9 hours per response, depending on the injection well class. Burden means the total time, effort, or financial resource expended by persons to generate, maintain, retain, or disclose or provide information to or for a Federal Agency. This includes the time needed to review instructions; develop, acquire, install, and utilize technology and systems for the purposes of collecting, validating, and verifying information, processing and maintaining information, and disclosing and providing information; adjust the existing ways to comply with any previously applicable instructions and requirements; train personnel to be able to respond to the collection of information; search data sources; complete and review the collection of information; and, transmit or otherwise disclose the information. An agency may not conduct or sponsor, and a person is not required to respond to, a collection of information unless it displays a currently valid OMB control number. Send comments on the Agency's need for this information, the accuracy of the provided burden estimates, and any suggested methods for minimizing respondent burden, including the use of automated collection techniques to Director, Collection Strategies Division, U.S. Environmental Protection Agency (2822), 1200 Pennsylvania Ave., NW., Washington, D.C. 20460. Include the OMB control number in any correspondence. Do not send the completed forms to this address.

AS-BUILT COREHOLE 518MF

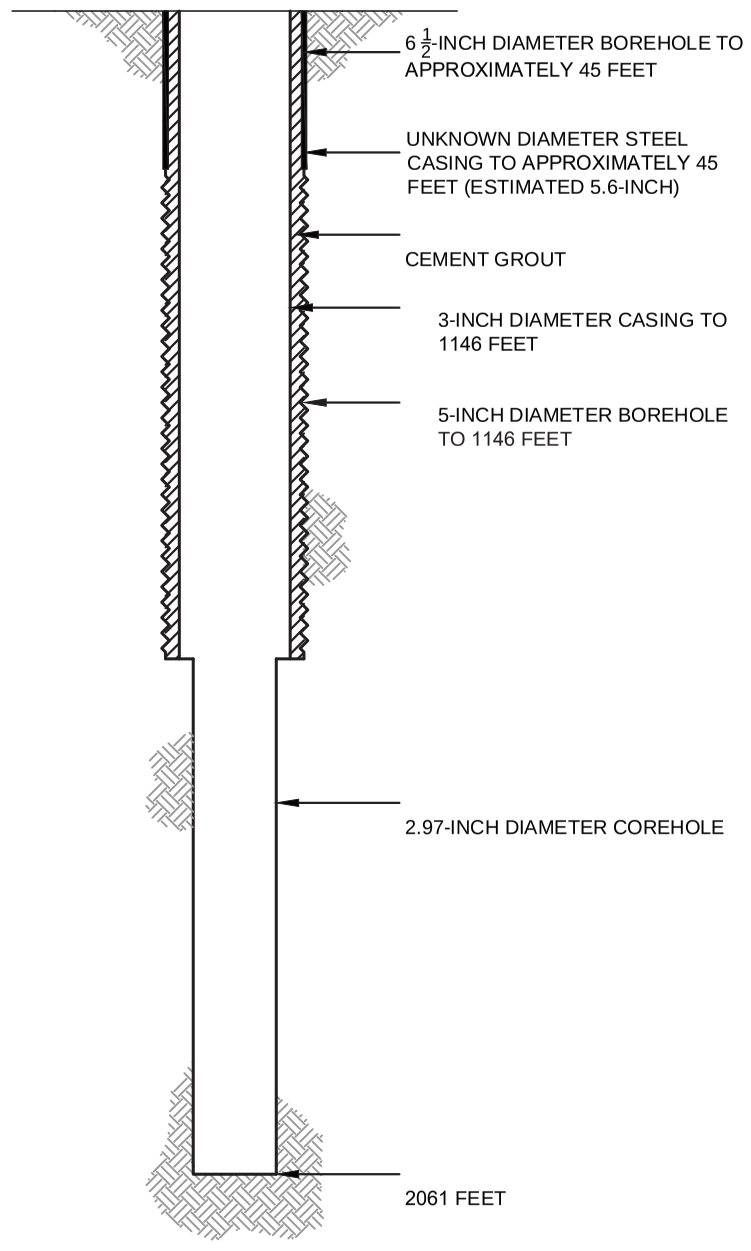

PROPOSED PLUGGING AND ABANDONMENT COREHOLE 518MF

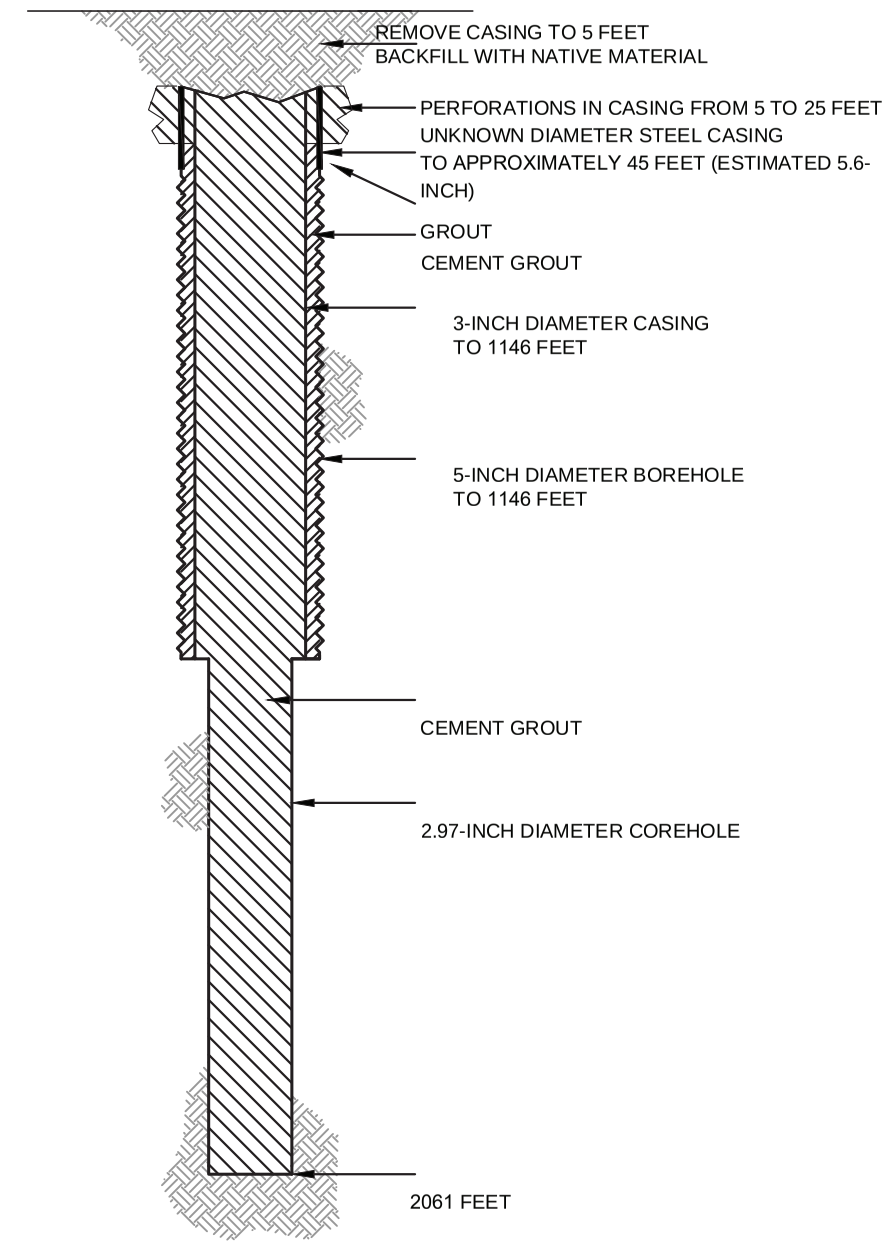

HALEY ALDRICH

FLORENCE COPPER, INC.
FLORENCE, ARIZONA

COREHOLE 518MF DIAGRAM

FLORENCE COPPER INC.

NOT TO SCALE
SEPTEMBER 2019

FIGURE 1

MOBINI, GITA Printed: 4/21/2017 12:00 PM Layout: ABANDON (2)
\PROJECTS\CURIS RESOURCES38706-CURIS FEASIBILITY\DRAWINGS\EPA\WELL ABANDON\415S_ABANDON.DWG

OMB No. 2040-0042 Approval Expires 4/30/2022

United States Environmental Protection Agency

WELL REWORK RECORD, PLUGGING AND ABANDONMENT PLAN, OR PLUGGING AND ABANDONMENT AFFIDAVIT

Name and Address, Phone Number and/or Email of Permittee

Florence Copper Project
1575 W Hunt Hwy,
Florence, AZ 85132

Permit or EPA ID Number	API Number	Full Well Name
R9UIC-AZ3-FY11-1		MCC367

State	County
Arizona	Pinal

Locate well in two directions from nearest lines of quarter section and drilling unit

Latitude 33.05037239

Surface Location

NE **1/4 of** SW **1/4 of Section** 28 **Township** 4S **Range** 9E

Longitude -111.4326089

_____ **ft. from (N/S)** _____ **Line of quarter section**

_____ **ft. from (E/W)** _____ **Line of quarter section.**

Well Class	Timing of Action (pick one)	Type of Action (pick one)
☐ Class I ☐ Class II ☑ Class III ☐ Class V	☑ Notice Prior to Work Date Expected to Commence March 2021 ☐ Report After Work Date Work Ended	☐ Well Rework ☑ Plugging and Abandonment ☐ Conversion to a Non-Injection Well

Provide a narrative description of the work planned to be performed, or that was performed. Use additional pages as necessary. See instructions.

A workover rig capable of performing the required abandonment operations at the required depths will be moved in and set up over the core hole. The core hole will be inspected to determine the depth to which the hole remains open and if any obstructions are present in the core hole; the presence and condition of any existing collar will also be documented. If necessary, the core hole will be cleaned out to a depth of at least 100 feet below the bedrock-LBFU contact to enable placement of cement seals.

If collar is present, an attempt will be made to remove it. If removal of the collar is not feasible, it will be left in the hole and perforated as needed to allow an annular seal to be placed to a depth of at least 25 feet bgs. In areas of agricultural use, the surface casing will be cut at least 5 feet bgs and removed.

If the collar cannot be removed, it will be perforated from at least 20 feet below the bedrock-LBFU contact to at least 20 feet above the contact; from at least 20 feet below the base of the MFGU to at least 20 feet above the top of the MFGU; and from at least 25 feet bgs to 5 feet bgs.

A tremie pipe will be used to place Type V cement in the open core hole from the bottom of the core hole to the top of the core hole. Cement retainers, as described above, will be used to force cement grout into the annulus and behind perforated intervals, as necessary.

If the hole has been obstructed, as much cement as possible will be placed from 100 feet below the LBFU-bedrock contact to the top of the core hole.

The volume of Type V cement will be recorded and will not be less than the estimated volume of material required to fill each interval. All cement grout will consist of Type V cement, or equivalent approved in accordance with the UIC Permit.

Certification

I certify under the penalty of law that I have personally examined and am familiar with the information submitted in this document and all attachments and that, based on my inquiry of those individuals immediately responsible for obtaining the information, I believe that the information is true, accurate, and complete. I am aware that there are significant penalties for submitting false information, including the possibliity of fine and imprisonment. (Ref. 40 CFR § 144.32)

Name and Official Title *(Please type or print)*	Signature	Date Signed
Dan Johnson, VP - General Manager		10/3/2019

INSTRUCTIONS FOR FORM 7520-19

This form replaces forms 7520-12 and 7520-14. Use this form only when work is planned or has occurred that affects the well's construction or operation as an injection well, including work on the casing, tubing or packer (or for shallow Class V wells, the subsurface fluid emplacement network). Use one form per injection well. While reports or other information developed by contractors or service companies may be attached, this form must be signed by a responsible entity as described at 40 CFR 144.32. Note: operators closing Class V wells should use Form 7520-17.

NAME, ADDRESS, PHONE AND/OR EMAIL OF PERMITTEE: Enter the name and street address, city/town, state, and ZIP code of the permittee. Also provide an email address (if available) and/or a phone number.

PERMIT OR EPA ID NUMBER: Enter the well identification number or permit number assigned to the well by the EPA or the permitting authority.

API NUMBER: Enter the number assigned by the local jurisdiction (usually a State Oil and Gas Agency) using the American Petroleum Institute standard numbering system.

FULL WELL NAME: Enter the full name of the well or project.

Enter the **STATE** and **COUNTY** where the well is located. For States that do not have counties, use the name of that State's equivalent jurisdiction at a more local level.

WELL LOCATION: Fill in the complete township, range, and section to the nearest quarter-quarter section. A township is north or south of the baseline, and a range is east or west of the principal meridian (e.g., T12N, R34W). Also include the distance, in feet, from the nearest north or south line and nearest east or west line of the quarter-section. Also, enter the **latitude** and **longitude** of the well in decimal degrees, to five or six places if possible; be sure to include a negative sign for the longitude of a well in the Western Hemisphere and a negative sign for the latitude of a well in the Southern Hemisphere.

Enter the **WELL CLASS,** i.e., the class of injection well as defined in 40 CFR 144.6.

TIMING OF THE ACTION: Check ***Notice prior to work*** if the activity has not yet occurred (i.e., is planned). Check ***Report after work*** if the activity described has already occurred. As appropriate, include the date the activity is expected to start or the date the activity was completed. (Note this may not be available, e.g., for a plugging plan submitted with a permit application.)

TYPE OF ACTION: Check the appropriate box to describe the kind of activity being reported. Check ***Well Rework*** for work that was/will be performed on the well after it has already been in operation as an injection well. Check ***Plugging and Abandonment*** to report on plans for or descriptions of final closure/plugging after use as an injection well. Check ***Conversion to a Non-Injection Well*** if the well is to be converted to something other than an injection well.

Provide a **NARRATIVE DESCRIPTION** of the work planned to be performed, or that was performed. The narrative should include a description of the main procedures planned or that occurred during the work activity. A service company report, daily report, or similar document may be attached if it includes all the requested information and is clear and legible.

For well reworks, include the following information: The reason for the well rework; depths of activity; type of activity; changes to injection well configuration, well casing, or cement behind casing; any plug added to the well and its depth; any newly drilled interval and its depth; method(s) to demonstrate that the well has mechanical integrity (as applicable); and any deviations from the approved rework plan (as applicable).

For a well plugging plan, include the following information: Reason for the well plugging; number of plugs placed, and their depths; materials used as plugs (e.g., cast iron bridge plug, cement, cement retainer); method to set plugs; and wait-on-cement times, if any. Also provide one or more cost estimates from an independent firm in the business of plugging and abandoning wells to plug the well as described in the plan.

For well plugging affidavit, include the following information: Reason for the well plugging; number of plugs placed, and their depths; materials used as plugs (e.g., cast iron bridge plug, cement, cement retainer); method to set plugs; wait-on-cement times, if any; and any deviations from the approved plugging plan (if applicable).

For conversion to a non-injection well, include the following information: Depths of activity; type of activity; changes to injection well configuration, well casing, or cement behind casing; any plug added to the well and its depth; any newly drilled interval and its depth; depths of new perforations; and method(s) to demonstrate that the well has mechanical integrity (as applicable).

For all of the above activities, include a well sketch depicting the work, results of well tests/logging performed, service company tickets, and any other available information demonstrating how the work was/is to be performed. Also, specify whether depths are below ground surface, relative to Kelly bushing, etc.

CERTIFICATION: This form must be signed and dated by either: a responsible corporate officer for a corporation, by a general partner for a partnership, by the proprietor of a sole proprietorship, or by a principal executive or ranking elected official for a public agency.

PAPERWORK REDUCTION ACT NOTICE: The public reporting and recordkeeping burden for this collection of information is estimated to average between 6.0 and 7.9 hours per response, depending on the injection well class. Burden means the total time, effort, or financial resource expended by persons to generate, maintain, retain, or disclose or provide information to or for a Federal Agency. This includes the time needed to review instructions; develop, acquire, install, and utilize technology and systems for the purposes of collecting, validating, and verifying information, processing and maintaining information, and disclosing and providing information; adjust the existing ways to comply with any previously applicable instructions and requirements; train personnel to be able to respond to the collection of information; search data sources; complete and review the collection of information; and, transmit or otherwise disclose the information. An agency may not conduct or sponsor, and a person is not required to respond to, a collection of information unless it displays a currently valid OMB control number. Send comments on the Agency's need for this information, the accuracy of the provided burden estimates, and any suggested methods for minimizing respondent burden, including the use of automated collection techniques to Director, Collection Strategies Division, U.S. Environmental Protection Agency (2822), 1200 Pennsylvania Ave., NW., Washington, D.C. 20460. Include the OMB control number in any correspondence. Do not send the completed forms to this address.

AS-BUILT COREHOLE MCC367

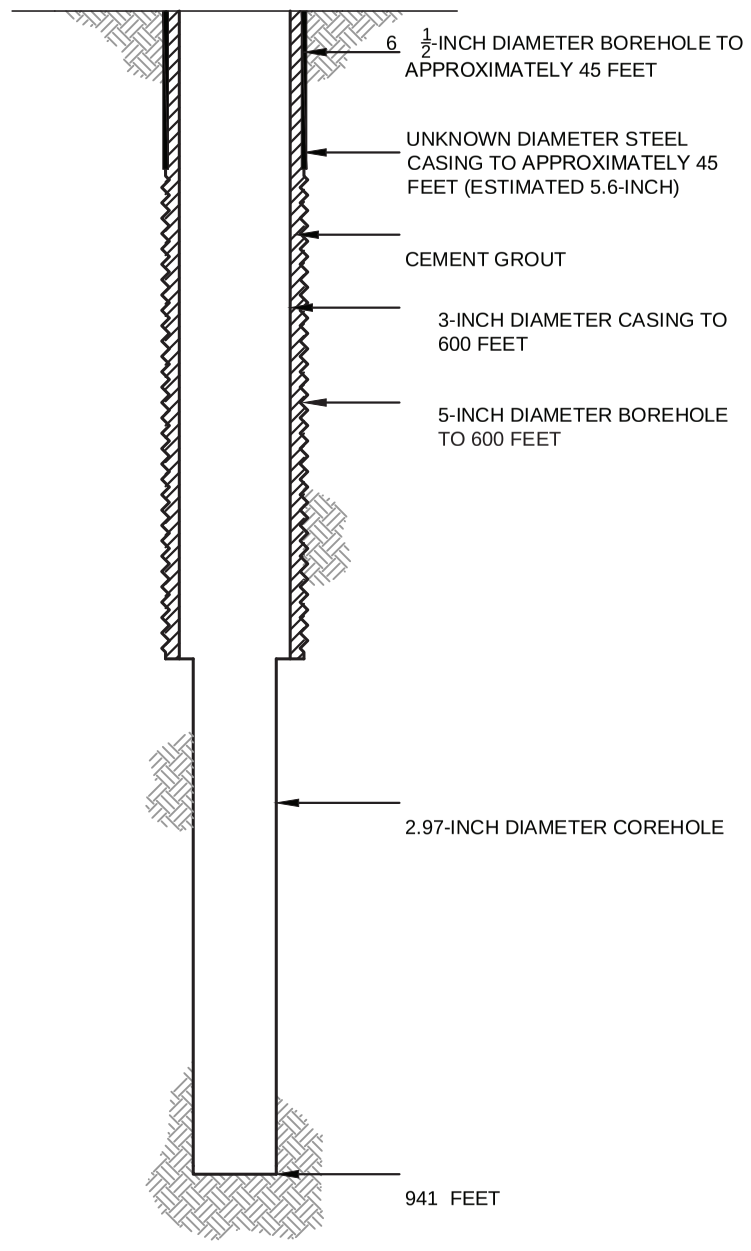

PROPOSED PLUGGING AND ABANDONMENT COREHOLE MCC367

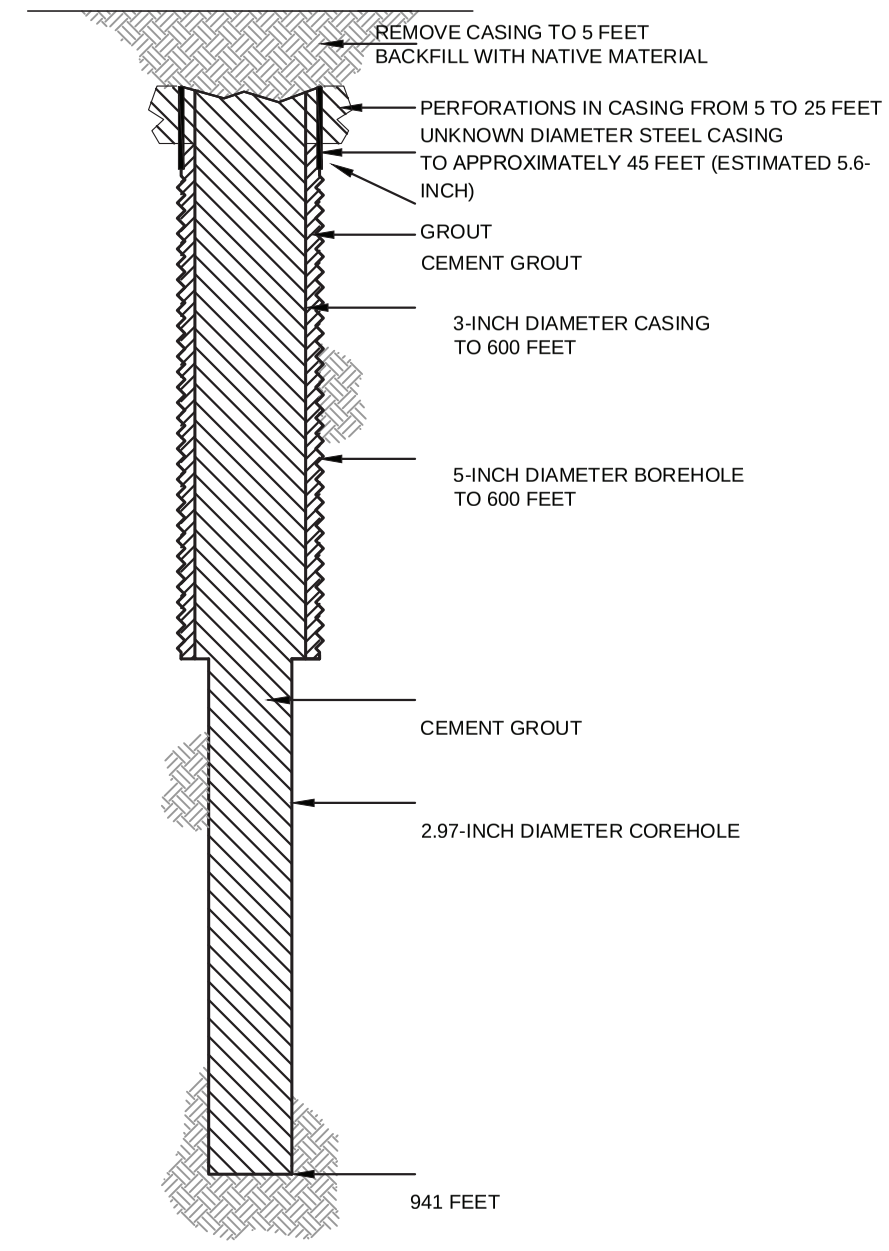

HALEY ALDRICH

FLORENCE COPPER, INC.
FLORENCE, ARIZONA

COREHOLE MCC367 DIAGRAM

FLORENCE COPPER INC.

NOT TO SCALE
SEPTEMBER 2019

FIGURE 1

MOBINI, GITA Printed: 4/21/2017 12:00 PM Layout: ABANDON (2)
\PROJECTS\CURIS RESOURCES38706-CURIS FEASIBILITY\DRAWINGS\EPA\WELL ABANDON\415S_ABANDON.DWG

OMB No. 2040-0042 Approval Expires 4/30/2022

United States Environmental Protection Agency

WELL REWORK RECORD, PLUGGING AND ABANDONMENT PLAN, OR PLUGGING AND ABANDONMENT AFFIDAVIT

Name and Address, Phone Number and/or Email of Permittee

Florence Copper Project
1575 W Hunt Hwy,
Florence, AZ 85132

Permit or EPA ID Number	API Number	Full Well Name
R9UIC-AZ3-FY11-1		MCC368

State	County
Arizona	Pinal

Locate well in two directions from nearest lines of quarter section and drilling unit

Latitude 33.04976349

Longitude -111.4330123

Surface Location

NE **1/4 of** SW **1/4 of Section** 28 **Township** 4S **Range** 9E

_____ **ft. from (N/S)** _____ **Line of quarter section**

_____ **ft. from (E/W)** _____ **Line of quarter section.**

Well Class	Timing of Action (pick one)	Type of Action (pick one)
☐ Class I ☐ Class II ☑ Class III ☐ Class V	☑ Notice Prior to Work Date Expected to Commence March 2021 ☐ Report After Work Date Work Ended	☐ Well Rework ☑ Plugging and Abandonment ☐ Conversion to a Non-Injection Well

Provide a narrative description of the work planned to be performed, or that was performed. Use additional pages as necessary. See instructions.

A workover rig capable of performing the required abandonment operations at the required depths will be moved in and set up over the core hole. The core hole will be inspected to determine the depth to which the hole remains open and if any obstructions are present in the core hole; the presence and condition of any existing collar will also be documented. If necessary, the core hole will be cleaned out to a depth of at least 100 feet below the bedrock-LBFU contact to enable placement of cement seals.

If collar is present, an attempt will be made to remove it. If removal of the collar is not feasible, it will be left in the hole and perforated as needed to allow an annular seal to be placed to a depth of at least 25 feet bgs. In areas of agricultural use, the surface casing will be cut at least 5 feet bgs and removed.

If the collar cannot be removed, it will be perforated from at least 20 feet below the bedrock-LBFU contact to at least 20 feet above the contact; from at least 20 feet below the base of the MFGU to at least 20 feet above the top of the MFGU; and from at least 25 feet bgs to 5 feet bgs.

A tremie pipe will be used to place Type V cement in the open core hole from the bottom of the core hole to the top of the core hole. Cement retainers, as described above, will be used to force cement grout into the annulus and behind perforated intervals, as necessary.

If the hole has been obstructed, as much cement as possible will be placed from 100 feet below the LBFU-bedrock contact to the top of the core hole.

The volume of Type V cement will be recorded and will not be less than the estimated volume of material required to fill each interval. All cement grout will consist of Type V cement, or equivalent approved in accordance with the UIC Permit.

Certification

I certify under the penalty of law that I have personally examined and am familiar with the information submitted in this document and all attachments and that, based on my inquiry of those individuals immediately responsible for obtaining the information, I believe that the information is true, accurate, and complete. I am aware that there are significant penalties for submitting false information, including the possibliity of fine and imprisonment. (Ref. 40 CFR § 144.32)

Name and Official Title *(Please type or print)*	Signature	Date Signed
Dan Johnson, VP - General Manager		10/3/2019

INSTRUCTIONS FOR FORM 7520-19

This form replaces forms 7520-12 and 7520-14. Use this form only when work is planned or has occurred that affects the well's construction or operation as an injection well, including work on the casing, tubing or packer (or for shallow Class V wells, the subsurface fluid emplacement network). Use one form per injection well. While reports or other information developed by contractors or service companies may be attached, this form must be signed by a responsible entity as described at 40 CFR 144.32. Note: operators closing Class V wells should use Form 7520-17.

NAME, ADDRESS, PHONE AND/OR EMAIL OF PERMITTEE: Enter the name and street address, city/town, state, and ZIP code of the permittee. Also provide an email address (if available) and/or a phone number.

PERMIT OR EPA ID NUMBER: Enter the well identification number or permit number assigned to the well by the EPA or the permitting authority.

API NUMBER: Enter the number assigned by the local jurisdiction (usually a State Oil and Gas Agency) using the American Petroleum Institute standard numbering system.

FULL WELL NAME: Enter the full name of the well or project.

Enter the **STATE** and **COUNTY** where the well is located. For States that do not have counties, use the name of that State's equivalent jurisdiction at a more local level.

WELL LOCATION: Fill in the complete township, range, and section to the nearest quarter-quarter section. A township is north or south of the baseline, and a range is east or west of the principal meridian (e.g., T12N, R34W). Also include the distance, in feet, from the nearest north or south line and nearest east or west line of the quarter-section. Also, enter the **latitude** and **longitude** of the well in decimal degrees, to five or six places if possible; be sure to include a negative sign for the longitude of a well in the Western Hemisphere and a negative sign for the latitude of a well in the Southern Hemisphere.

Enter the **WELL CLASS,** i.e., the class of injection well as defined in 40 CFR 144.6.

TIMING OF THE ACTION: Check ***Notice prior to work*** if the activity has not yet occurred (i.e., is planned). Check ***Report after work*** if the activity described has already occurred. As appropriate, include the date the activity is expected to start or the date the activity was completed. (Note this may not be available, e.g., for a plugging plan submitted with a permit application.)

TYPE OF ACTION: Check the appropriate box to describe the kind of activity being reported. Check ***Well Rework*** for work that was/will be performed on the well after it has already been in operation as an injection well. Check ***Plugging and Abandonment*** to report on plans for or descriptions of final closure/plugging after use as an injection well. Check ***Conversion to a Non-Injection Well*** if the well is to be converted to something other than an injection well.

Provide a **NARRATIVE DESCRIPTION** of the work planned to be performed, or that was performed. The narrative should include a description of the main procedures planned or that occurred during the work activity. A service company report, daily report, or similar document may be attached if it includes all the requested information and is clear and legible.

For well reworks, include the following information: The reason for the well rework; depths of activity; type of activity; changes to injection well configuration, well casing, or cement behind casing; any plug added to the well and its depth; any newly drilled interval and its depth; method(s) to demonstrate that the well has mechanical integrity (as applicable); and any deviations from the approved rework plan (as applicable).

For a well plugging plan, include the following information: Reason for the well plugging; number of plugs placed, and their depths; materials used as plugs (e.g., cast iron bridge plug, cement, cement retainer); method to set plugs; and wait-on-cement times, if any. Also provide one or more cost estimates from an independent firm in the business of plugging and abandoning wells to plug the well as described in the plan.

For well plugging affidavit, include the following information: Reason for the well plugging; number of plugs placed, and their depths; materials used as plugs (e.g., cast iron bridge plug, cement, cement retainer); method to set plugs; wait-on-cement times, if any; and any deviations from the approved plugging plan (if applicable).

For conversion to a non-injection well, include the following information: Depths of activity; type of activity; changes to injection well configuration, well casing, or cement behind casing; any plug added to the well and its depth; any newly drilled interval and its depth; depths of new perforations; and method(s) to demonstrate that the well has mechanical integrity (as applicable).

For all of the above activities, include a well sketch depicting the work, results of well tests/logging performed, service company tickets, and any other available information demonstrating how the work was/is to be performed. Also, specify whether depths are below ground surface, relative to Kelly bushing, etc.

CERTIFICATION: This form must be signed and dated by either: a responsible corporate officer for a corporation, by a general partner for a partnership, by the proprietor of a sole proprietorship, or by a principal executive or ranking elected official for a public agency.

PAPERWORK REDUCTION ACT NOTICE: The public reporting and recordkeeping burden for this collection of information is estimated to average between 6.0 and 7.9 hours per response, depending on the injection well class. Burden means the total time, effort, or financial resource expended by persons to generate, maintain, retain, or disclose or provide information to or for a Federal Agency. This includes the time needed to review instructions; develop, acquire, install, and utilize technology and systems for the purposes of collecting, validating, and verifying information, processing and maintaining information, and disclosing and providing information; adjust the existing ways to comply with any previously applicable instructions and requirements; train personnel to be able to respond to the collection of information; search data sources; complete and review the collection of information; and, transmit or otherwise disclose the information. An agency may not conduct or sponsor, and a person is not required to respond to, a collection of information unless it displays a currently valid OMB control number. Send comments on the Agency's need for this information, the accuracy of the provided burden estimates, and any suggested methods for minimizing respondent burden, including the use of automated collection techniques to Director, Collection Strategies Division, U.S. Environmental Protection Agency (2822), 1200 Pennsylvania Ave., NW., Washington, D.C. 20460. Include the OMB control number in any correspondence. Do not send the completed forms to this address.

AS-BUILT COREHOLE MCC368

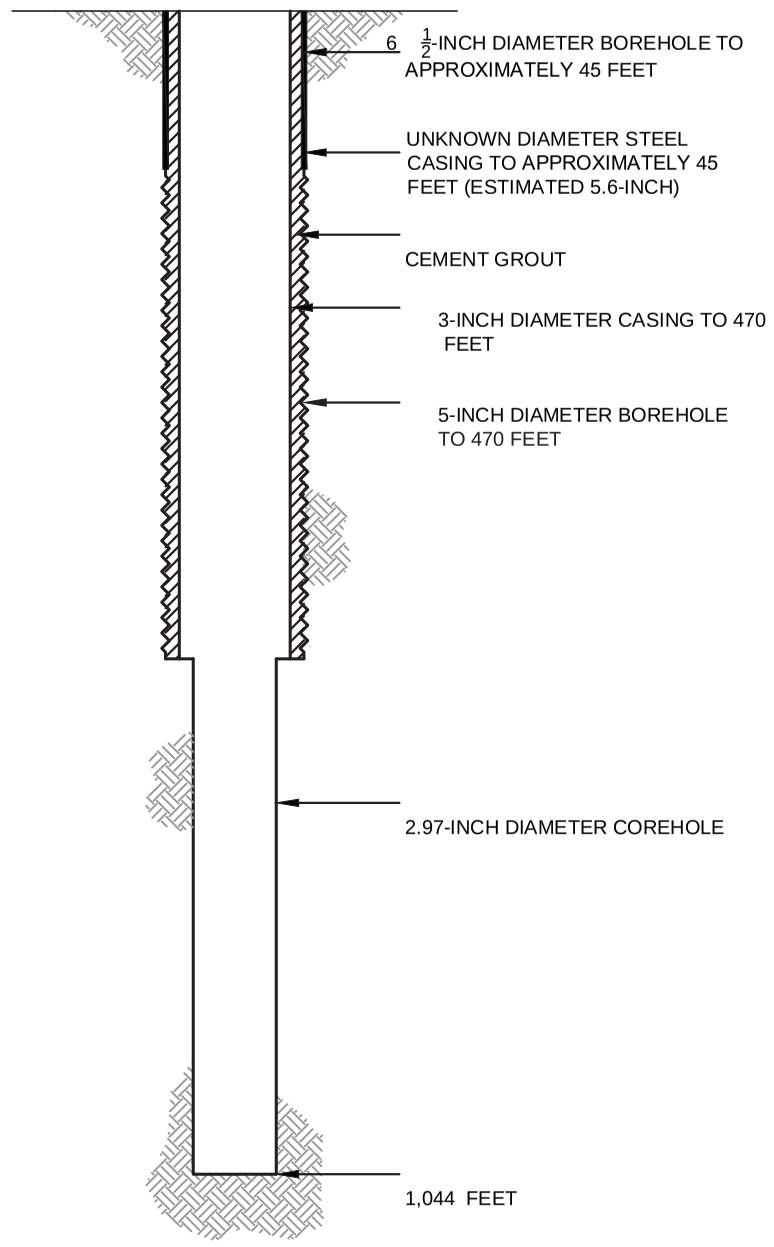

PROPOSED PLUGGING AND ABANDONMENT COREHOLE MCC368

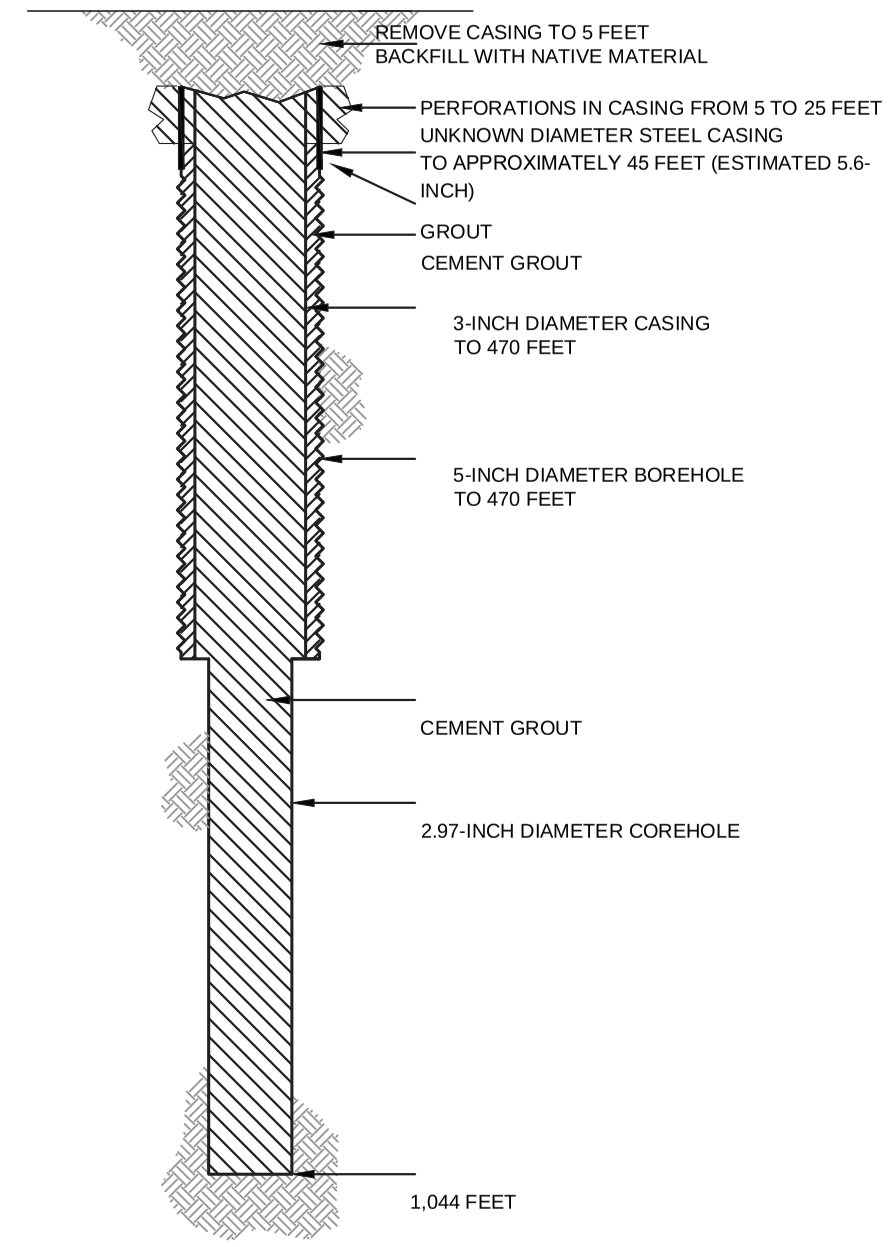

HALEY ALDRICH

FLORENCE COPPER, INC.
FLORENCE, ARIZONA

COREHOLE MCC368 DIAGRAM

FLORENCE COPPER INC.

NOT TO SCALE
SEPTEMBER 2019

FIGURE 1

MOBINI, GITA Printed: 4/21/2017 12:00 PM Layout: ABANDON (2)
\PROJECTS\CURIS RESOURCES38706-CURIS FEASIBILITY\DRAWINGS\EPA\WELL ABANDON\415S_ABANDON.DWG

OMB No. 2040-0042 Approval Expires 4/30/2022

United States Environmental Protection Agency

WELL REWORK RECORD, PLUGGING AND ABANDONMENT PLAN, OR PLUGGING AND ABANDONMENT AFFIDAVIT

Name and Address, Phone Number and/or Email of Permittee

Florence Copper Project
1575 W Hunt Hwy,
Florence, AZ 85132

Permit or EPA ID Number	API Number	Full Well Name
R9UIC-AZ3-FY11-1		MCC421

State	County
Arizona	Pinal

Locate well in two directions from nearest lines of quarter section and drilling unit

Latitude 33.04906935

Longitude -111.4327714

Surface Location

SE **1/4 of** SW **1/4 of Section** 28 **Township** 4S **Range** 9E

_____ **ft. from (N/S)** _____ **Line of quarter section**

_____ **ft. from (E/W)** _____ **Line of quarter section.**

Well Class	Timing of Action (pick one)	Type of Action (pick one)
☐ Class I ☐ Class II ☑ Class III ☐ Class V	☑ Notice Prior to Work Date Expected to Commence March 2021 ☐ Report After Work Date Work Ended	☐ Well Rework ☑ Plugging and Abandonment ☐ Conversion to a Non-Injection Well

Provide a narrative description of the work planned to be performed, or that was performed. Use additional pages as necessary. See instructions.

A workover rig capable of performing the required abandonment operations at the required depths will be moved in and set up over the core hole. The core hole will be inspected to determine the depth to which the hole remains open and if any obstructions are present in the core hole; the presence and condition of any existing collar will also be documented. If necessary, the core hole will be cleaned out to a depth of at least 100 feet below the bedrock-LBFU contact to enable placement of cement seals.

If collar is present, an attempt will be made to remove it. If removal of the collar is not feasible, it will be left in the hole and perforated as needed to allow an annular seal to be placed to a depth of at least 25 feet bgs. In areas of agricultural use, the surface casing will be cut at least 5 feet bgs and removed.

If the collar cannot be removed, it will be perforated from at least 20 feet below the bedrock-LBFU contact to at least 20 feet above the contact; from at least 20 feet below the base of the MFGU to at least 20 feet above the top of the MFGU; and from at least 25 feet bgs to 5 feet bgs.

A tremie pipe will be used to place Type V cement in the open core hole from the bottom of the core hole to the top of the core hole. Cement retainers, as described above, will be used to force cement grout into the annulus and behind perforated intervals, as necessary.

If the hole has been obstructed, as much cement as possible will be placed from 100 feet below the LBFU-bedrock contact to the top of the core hole.

The volume of Type V cement will be recorded and will not be less than the estimated volume of material required to fill each interval. All cement grout will consist of Type V cement, or equivalent approved in accordance with the UIC Permit.

Certification

I certify under the penalty of law that I have personally examined and am familiar with the information submitted in this document and all attachments and that, based on my inquiry of those individuals immediately responsible for obtaining the information, I believe that the information is true, accurate, and complete. I am aware that there are significant penalties for submitting false information, including the possibliity of fine and imprisonment. (Ref. 40 CFR § 144.32)

Name and Official Title *(Please type or print)*	Signature	Date Signed
Dan Johnson, VP - General Manager		10/3/2019

INSTRUCTIONS FOR FORM 7520-19

This form replaces forms 7520-12 and 7520-14. Use this form only when work is planned or has occurred that affects the well's construction or operation as an injection well, including work on the casing, tubing or packer (or for shallow Class V wells, the subsurface fluid emplacement network). Use one form per injection well. While reports or other information developed by contractors or service companies may be attached, this form must be signed by a responsible entity as described at 40 CFR 144.32. Note: operators closing Class V wells should use Form 7520-17.

NAME, ADDRESS, PHONE AND/OR EMAIL OF PERMITTEE: Enter the name and street address, city/town, state, and ZIP code of the permittee. Also provide an email address (if available) and/or a phone number.

PERMIT OR EPA ID NUMBER: Enter the well identification number or permit number assigned to the well by the EPA or the permitting authority.

API NUMBER: Enter the number assigned by the local jurisdiction (usually a State Oil and Gas Agency) using the American Petroleum Institute standard numbering system.

FULL WELL NAME: Enter the full name of the well or project.

Enter the **STATE** and **COUNTY** where the well is located. For States that do not have counties, use the name of that State's equivalent jurisdiction at a more local level.

WELL LOCATION: Fill in the complete township, range, and section to the nearest quarter-quarter section. A township is north or south of the baseline, and a range is east or west of the principal meridian (e.g., T12N, R34W). Also include the distance, in feet, from the nearest north or south line and nearest east or west line of the quarter-section. Also, enter the **latitude** and **longitude** of the well in decimal degrees, to five or six places if possible; be sure to include a negative sign for the longitude of a well in the Western Hemisphere and a negative sign for the latitude of a well in the Southern Hemisphere.

Enter the **WELL CLASS,** i.e., the class of injection well as defined in 40 CFR 144.6.

TIMING OF THE ACTION: Check ***Notice prior to work*** if the activity has not yet occurred (i.e., is planned). Check ***Report after work*** if the activity described has already occurred. As appropriate, include the date the activity is expected to start or the date the activity was completed. (Note this may not be available, e.g., for a plugging plan submitted with a permit application.)

TYPE OF ACTION: Check the appropriate box to describe the kind of activity being reported. Check ***Well Rework*** for work that was/will be performed on the well after it has already been in operation as an injection well. Check ***Plugging and Abandonment*** to report on plans for or descriptions of final closure/plugging after use as an injection well. Check ***Conversion to a Non-Injection Well*** if the well is to be converted to something other than an injection well.

Provide a **NARRATIVE DESCRIPTION** of the work planned to be performed, or that was performed. The narrative should include a description of the main procedures planned or that occurred during the work activity. A service company report, daily report, or similar document may be attached if it includes all the requested information and is clear and legible.

For well reworks, include the following information: The reason for the well rework; depths of activity; type of activity; changes to injection well configuration, well casing, or cement behind casing; any plug added to the well and its depth; any newly drilled interval and its depth; method(s) to demonstrate that the well has mechanical integrity (as applicable); and any deviations from the approved rework plan (as applicable).

For a well plugging plan, include the following information: Reason for the well plugging; number of plugs placed, and their depths; materials used as plugs (e.g., cast iron bridge plug, cement, cement retainer); method to set plugs; and wait-on-cement times, if any. Also provide one or more cost estimates from an independent firm in the business of plugging and abandoning wells to plug the well as described in the plan.

For well plugging affidavit, include the following information: Reason for the well plugging; number of plugs placed, and their depths; materials used as plugs (e.g., cast iron bridge plug, cement, cement retainer); method to set plugs; wait-on-cement times, if any; and any deviations from the approved plugging plan (if applicable).

For conversion to a non-injection well, include the following information: Depths of activity; type of activity; changes to injection well configuration, well casing, or cement behind casing; any plug added to the well and its depth; any newly drilled interval and its depth; depths of new perforations; and method(s) to demonstrate that the well has mechanical integrity (as applicable).

For all of the above activities, include a well sketch depicting the work, results of well tests/logging performed, service company tickets, and any other available information demonstrating how the work was/is to be performed. Also, specify whether depths are below ground surface, relative to Kelly bushing, etc.

CERTIFICATION: This form must be signed and dated by either: a responsible corporate officer for a corporation, by a general partner for a partnership, by the proprietor of a sole proprietorship, or by a principal executive or ranking elected official for a public agency.

PAPERWORK REDUCTION ACT NOTICE: The public reporting and recordkeeping burden for this collection of information is estimated to average between 6.0 and 7.9 hours per response, depending on the injection well class. Burden means the total time, effort, or financial resource expended by persons to generate, maintain, retain, or disclose or provide information to or for a Federal Agency. This includes the time needed to review instructions; develop, acquire, install, and utilize technology and systems for the purposes of collecting, validating, and verifying information, processing and maintaining information, and disclosing and providing information; adjust the existing ways to comply with any previously applicable instructions and requirements; train personnel to be able to respond to the collection of information; search data sources; complete and review the collection of information; and, transmit or otherwise disclose the information. An agency may not conduct or sponsor, and a person is not required to respond to, a collection of information unless it displays a currently valid OMB control number. Send comments on the Agency's need for this information, the accuracy of the provided burden estimates, and any suggested methods for minimizing respondent burden, including the use of automated collection techniques to Director, Collection Strategies Division, U.S. Environmental Protection Agency (2822), 1200 Pennsylvania Ave., NW., Washington, D.C. 20460. Include the OMB control number in any correspondence. Do not send the completed forms to this address.

AS-BUILT COREHOLE MCC421

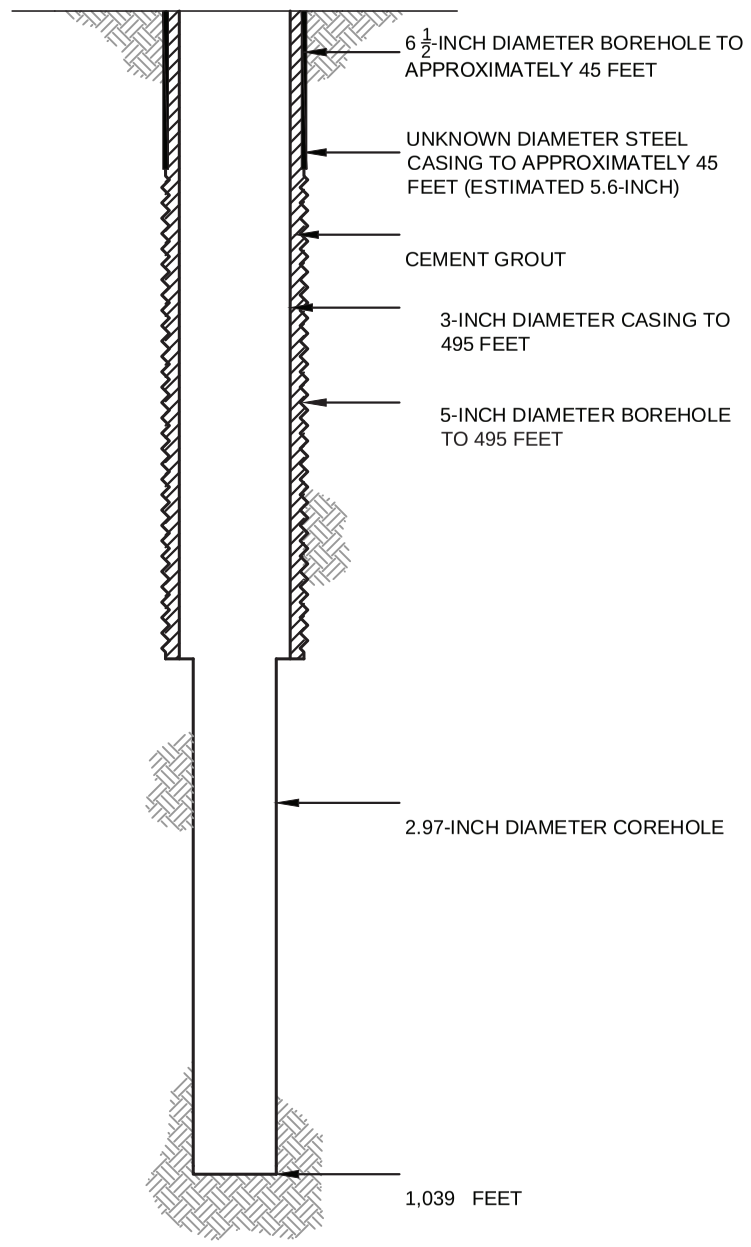

PROPOSED PLUGGING AND ABANDONMENT COREHOLE MCC421

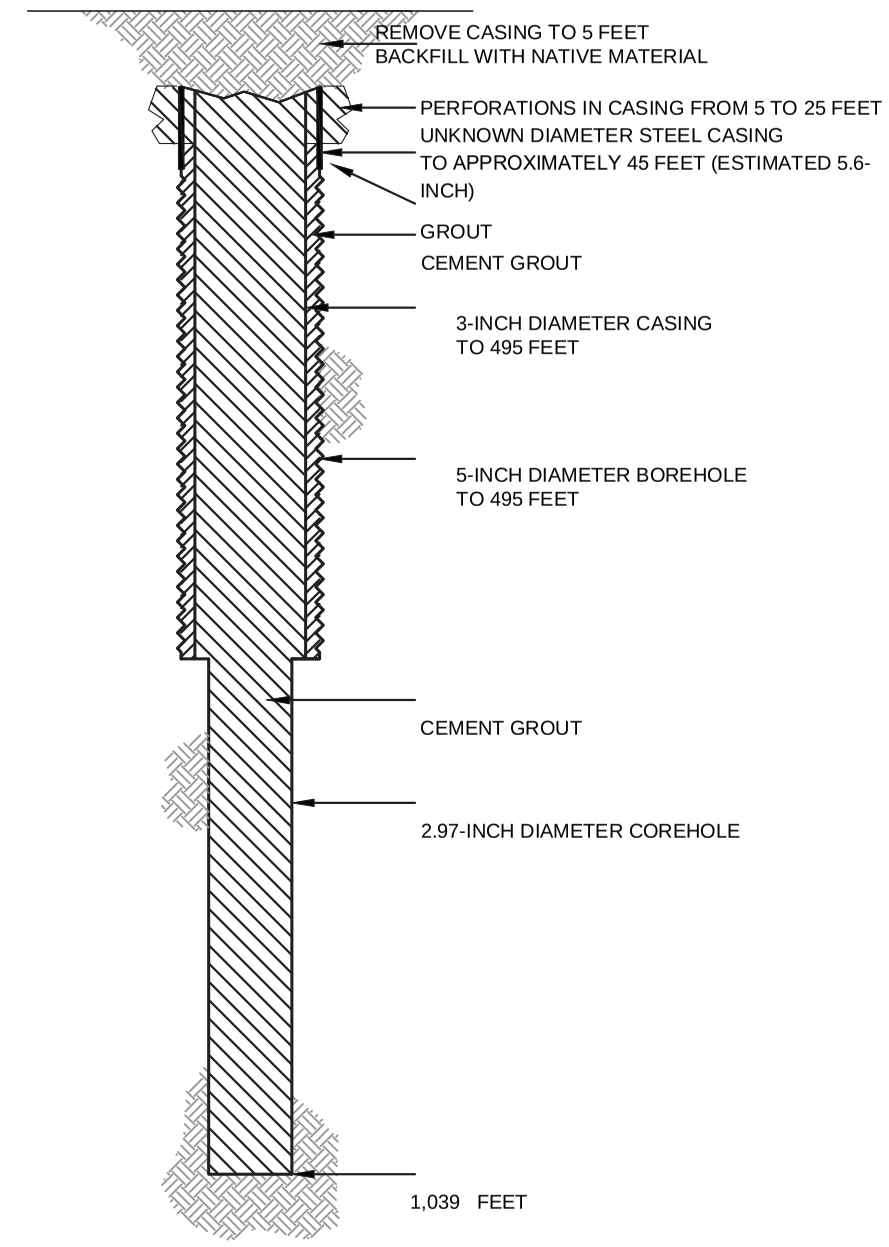

HALEY ALDRICH

FLORENCE COPPER, INC.
FLORENCE, ARIZONA

COREHOLE MCC421 DIAGRAM

FLORENCE COPPER INC.

NOT TO SCALE
SEPTEMBER 2019

FIGURE 1

MOBINI, GITA Printed: 4/21/2017 12:00 PM Layout: ABANDON (2)
\PROJECTS\CURIS RESOURCES38706-CURIS FEASIBILITY\DRAWINGS\EPA\WELL ABANDON\415S_ABANDON.DWG

OMB No. 2040-0042 Approval Expires 4/30/2022

United States Environmental Protection Agency

WELL REWORK RECORD, PLUGGING AND ABANDONMENT PLAN, OR PLUGGING AND ABANDONMENT AFFIDAVIT

Name and Address, Phone Number and/or Email of Permittee

Florence Copper Project
1575 W Hunt Hwy,
Florence, AZ 85132

Permit or EPA ID Number	API Number	Full Well Name
R9UIC-AZ3-FY11-1		MCC423

State	County
Arizona	Pinal

Locate well in two directions from nearest lines of quarter section and drilling unit

Latitude 33.0473769

Longitude -111.4313936

Surface Location

SE **1/4 of** SW **1/4 of Section** 28 **Township** 4S **Range** 9E

_____ **ft. from (N/S)** _____ **Line of quarter section**

_____ **ft. from (E/W)** _____ **Line of quarter section.**

Well Class	Timing of Action (pick one)	Type of Action (pick one)
☐ Class I ☐ Class II ☑ Class III ☐ Class V	☑ Notice Prior to Work Date Expected to Commence March 2021 ☐ Report After Work Date Work Ended	☐ Well Rework ☑ Plugging and Abandonment ☐ Conversion to a Non-Injection Well

Provide a narrative description of the work planned to be performed, or that was performed. Use additional pages as necessary. See instructions.

A workover rig capable of performing the required abandonment operations at the required depths will be moved in and set up over the core hole. The core hole will be inspected to determine the depth to which the hole remains open and if any obstructions are present in the core hole; the presence and condition of any existing collar will also be documented. If necessary, the core hole will be cleaned out to a depth of at least 100 feet below the bedrock-LBFU contact to enable placement of cement seals.

If collar is present, an attempt will be made to remove it. If removal of the collar is not feasible, it will be left in the hole and perforated as needed to allow an annular seal to be placed to a depth of at least 25 feet bgs. In areas of agricultural use, the surface casing will be cut at least 5 feet bgs and removed.

If the collar cannot be removed, it will be perforated from at least 20 feet below the bedrock-LBFU contact to at least 20 feet above the contact; from at least 20 feet below the base of the MFGU to at least 20 feet above the top of the MFGU; and from at least 25 feet bgs to 5 feet bgs.

A tremie pipe will be used to place Type V cement in the open core hole from the bottom of the core hole to the top of the core hole. Cement retainers, as described above, will be used to force cement grout into the annulus and behind perforated intervals, as necessary.

If the hole has been obstructed, as much cement as possible will be placed from 100 feet below the LBFU-bedrock contact to the top of the core hole.

The volume of Type V cement will be recorded and will not be less than the estimated volume of material required to fill each interval. All cement grout will consist of Type V cement, or equivalent approved in accordance with the UIC Permit.

Certification

I certify under the penalty of law that I have personally examined and am familiar with the information submitted in this document and all attachments and that, based on my inquiry of those individuals immediately responsible for obtaining the information, I believe that the information is true, accurate, and complete. I am aware that there are significant penalties for submitting false information, including the possibliity of fine and imprisonment. (Ref. 40 CFR § 144.32)

Name and Official Title *(Please type or print)*	Signature	Date Signed
Dan Johnson, VP - General Manager		10/3/2019

INSTRUCTIONS FOR FORM 7520-19

This form replaces forms 7520-12 and 7520-14. Use this form only when work is planned or has occurred that affects the well's construction or operation as an injection well, including work on the casing, tubing or packer (or for shallow Class V wells, the subsurface fluid emplacement network). Use one form per injection well. While reports or other information developed by contractors or service companies may be attached, this form must be signed by a responsible entity as described at 40 CFR 144.32. Note: operators closing Class V wells should use Form 7520-17.

NAME, ADDRESS, PHONE AND/OR EMAIL OF PERMITTEE: Enter the name and street address, city/town, state, and ZIP code of the permittee. Also provide an email address (if available) and/or a phone number.

PERMIT OR EPA ID NUMBER: Enter the well identification number or permit number assigned to the well by the EPA or the permitting authority.

API NUMBER: Enter the number assigned by the local jurisdiction (usually a State Oil and Gas Agency) using the American Petroleum Institute standard numbering system.

FULL WELL NAME: Enter the full name of the well or project.

Enter the **STATE** and **COUNTY** where the well is located. For States that do not have counties, use the name of that State's equivalent jurisdiction at a more local level.

WELL LOCATION: Fill in the complete township, range, and section to the nearest quarter-quarter section. A township is north or south of the baseline, and a range is east or west of the principal meridian (e.g., T12N, R34W). Also include the distance, in feet, from the nearest north or south line and nearest east or west line of the quarter-section. Also, enter the **latitude** and **longitude** of the well in decimal degrees, to five or six places if possible; be sure to include a negative sign for the longitude of a well in the Western Hemisphere and a negative sign for the latitude of a well in the Southern Hemisphere.

Enter the **WELL CLASS,** i.e., the class of injection well as defined in 40 CFR 144.6.

TIMING OF THE ACTION: Check ***Notice prior to work*** if the activity has not yet occurred (i.e., is planned). Check ***Report after work*** if the activity described has already occurred. As appropriate, include the date the activity is expected to start or the date the activity was completed. (Note this may not be available, e.g., for a plugging plan submitted with a permit application.)

TYPE OF ACTION: Check the appropriate box to describe the kind of activity being reported. Check ***Well Rework*** for work that was/will be performed on the well after it has already been in operation as an injection well. Check ***Plugging and Abandonment*** to report on plans for or descriptions of final closure/plugging after use as an injection well. Check ***Conversion to a Non-Injection Well*** if the well is to be converted to something other than an injection well.

Provide a **NARRATIVE DESCRIPTION** of the work planned to be performed, or that was performed. The narrative should include a description of the main procedures planned or that occurred during the work activity. A service company report, daily report, or similar document may be attached if it includes all the requested information and is clear and legible.

For well reworks, include the following information: The reason for the well rework; depths of activity; type of activity; changes to injection well configuration, well casing, or cement behind casing; any plug added to the well and its depth; any newly drilled interval and its depth; method(s) to demonstrate that the well has mechanical integrity (as applicable); and any deviations from the approved rework plan (as applicable).

For a well plugging plan, include the following information: Reason for the well plugging; number of plugs placed, and their depths; materials used as plugs (e.g., cast iron bridge plug, cement, cement retainer); method to set plugs; and wait-on-cement times, if any. Also provide one or more cost estimates from an independent firm in the business of plugging and abandoning wells to plug the well as described in the plan.

For well plugging affidavit, include the following information: Reason for the well plugging; number of plugs placed, and their depths; materials used as plugs (e.g., cast iron bridge plug, cement, cement retainer); method to set plugs; wait-on-cement times, if any; and any deviations from the approved plugging plan (if applicable).

For conversion to a non-injection well, include the following information: Depths of activity; type of activity; changes to injection well configuration, well casing, or cement behind casing; any plug added to the well and its depth; any newly drilled interval and its depth; depths of new perforations; and method(s) to demonstrate that the well has mechanical integrity (as applicable).

For all of the above activities, include a well sketch depicting the work, results of well tests/logging performed, service company tickets, and any other available information demonstrating how the work was/is to be performed. Also, specify whether depths are below ground surface, relative to Kelly bushing, etc.

CERTIFICATION: This form must be signed and dated by either: a responsible corporate officer for a corporation, by a general partner for a partnership, by the proprietor of a sole proprietorship, or by a principal executive or ranking elected official for a public agency.

PAPERWORK REDUCTION ACT NOTICE: The public reporting and recordkeeping burden for this collection of information is estimated to average between 6.0 and 7.9 hours per response, depending on the injection well class. Burden means the total time, effort, or financial resource expended by persons to generate, maintain, retain, or disclose or provide information to or for a Federal Agency. This includes the time needed to review instructions; develop, acquire, install, and utilize technology and systems for the purposes of collecting, validating, and verifying information, processing and maintaining information, and disclosing and providing information; adjust the existing ways to comply with any previously applicable instructions and requirements; train personnel to be able to respond to the collection of information; search data sources; complete and review the collection of information; and, transmit or otherwise disclose the information. An agency may not conduct or sponsor, and a person is not required to respond to, a collection of information unless it displays a currently valid OMB control number. Send comments on the Agency's need for this information, the accuracy of the provided burden estimates, and any suggested methods for minimizing respondent burden, including the use of automated collection techniques to Director, Collection Strategies Division, U.S. Environmental Protection Agency (2822), 1200 Pennsylvania Ave., NW., Washington, D.C. 20460. Include the OMB control number in any correspondence. Do not send the completed forms to this address.

AS-BUILT COREHOLE MCC423

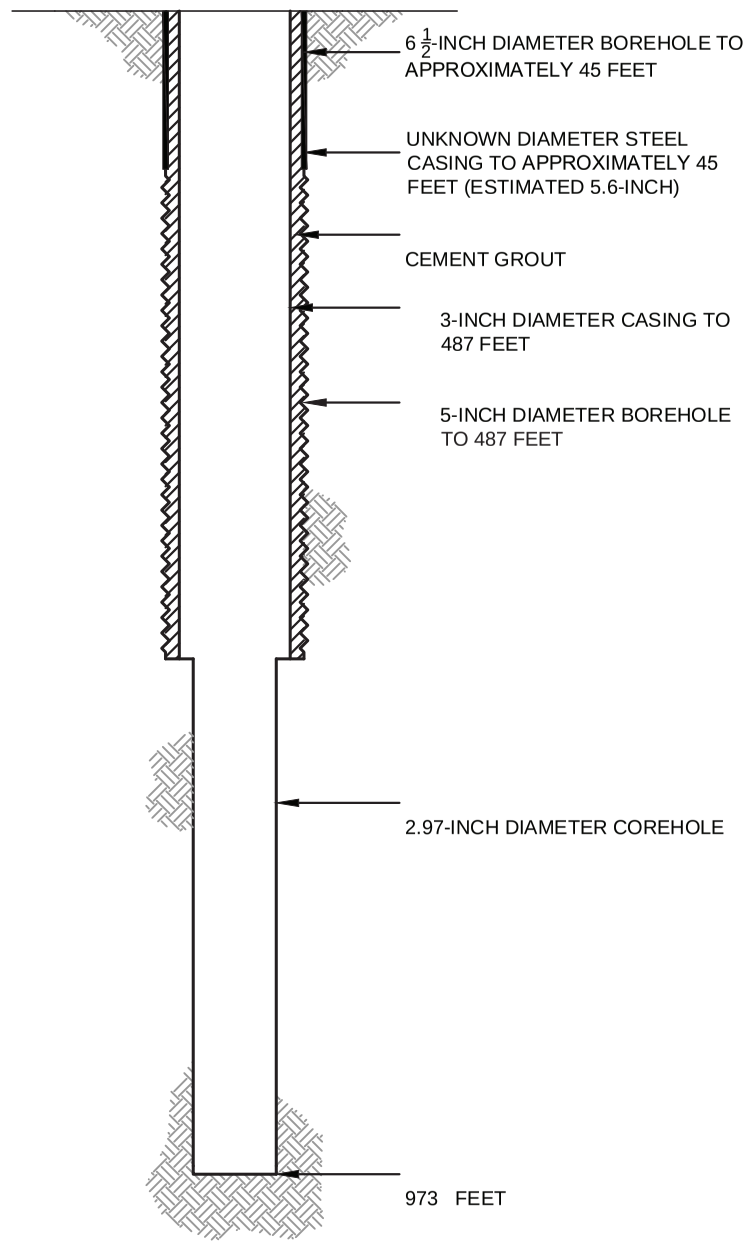

PROPOSED PLUGGING AND ABANDONMENT COREHOLE MCC423

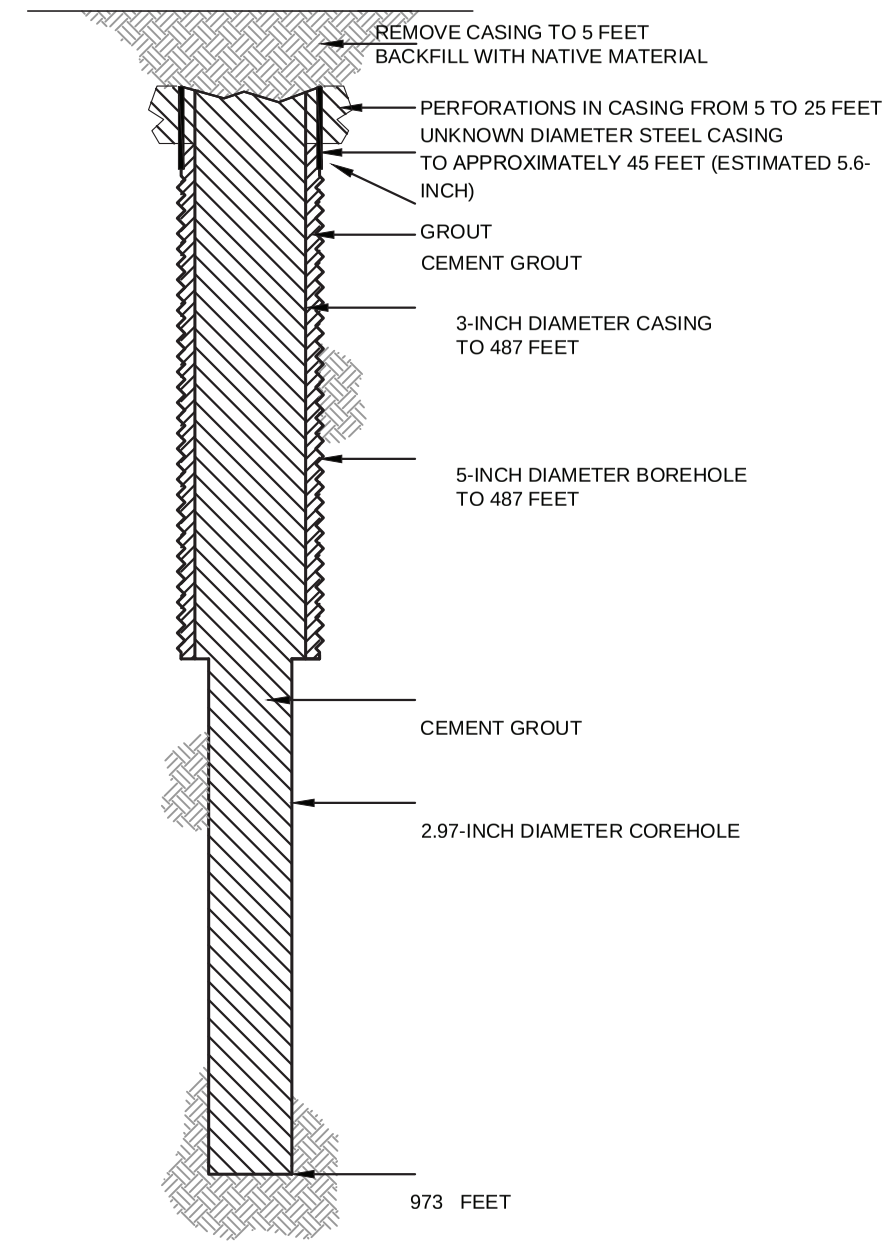

HALEY ALDRICH

FLORENCE COPPER, INC.
FLORENCE, ARIZONA

COREHOLE MCC423 DIAGRAM

FLORENCE COPPER INC.

NOT TO SCALE
SEPTEMBER 2019

FIGURE 1

MOBINI, GITA Printed: 4/21/2017 12:00 PM Layout: ABANDON (2)
\PROJECTS\CURIS RESOURCES38706-CURIS FEASIBILITY\DRAWINGS\EPA\WELL ABANDON\415S_ABANDON.DWG

OMB No. 2040-0042 Approval Expires 4/30/2022

United States Environmental Protection Agency

WELL REWORK RECORD, PLUGGING AND ABANDONMENT PLAN, OR PLUGGING AND ABANDONMENT AFFIDAVIT

Name and Address, Phone Number and/or Email of Permittee

Florence Copper Project
1575 W Hunt Hwy,
Florence, AZ 85132

Permit or EPA ID Number	API Number	Full Well Name
R9UIC-AZ3-FY11-1		MCC425

State	County
Arizona	Pinal

Locate well in two directions from nearest lines of quarter section and drilling unit

Latitude 33.04678025

Surface Location

SE **1/4 of** SW **1/4 of Section** 28 **Township** 4S **Range** 9E

Longitude -111.430989

_____ **ft. from (N/S)** _____ **Line of quarter section**

_____ **ft. from (E/W)** _____ **Line of quarter section.**

Well Class	Timing of Action (pick one)	Type of Action (pick one)
☐ Class I ☐ Class II ☑ Class III ☐ Class V	☑ Notice Prior to Work Date Expected to Commence March 2021 ☐ Report After Work Date Work Ended	☐ Well Rework ☑ Plugging and Abandonment ☐ Conversion to a Non-Injection Well

Provide a narrative description of the work planned to be performed, or that was performed. Use additional pages as necessary. See instructions.

A workover rig capable of performing the required abandonment operations at the required depths will be moved in and set up over the core hole. The core hole will be inspected to determine the depth to which the hole remains open and if any obstructions are present in the core hole; the presence and condition of any existing collar will also be documented. If necessary, the core hole will be cleaned out to a depth of at least 100 feet below the bedrock-LBFU contact to enable placement of cement seals.

If collar is present, an attempt will be made to remove it. If removal of the collar is not feasible, it will be left in the hole and perforated as needed to allow an annular seal to be placed to a depth of at least 25 feet bgs. In areas of agricultural use, the surface casing will be cut at least 5 feet bgs and removed.

If the collar cannot be removed, it will be perforated from at least 20 feet below the bedrock-LBFU contact to at least 20 feet above the contact; from at least 20 feet below the base of the MFGU to at least 20 feet above the top of the MFGU; and from at least 25 feet bgs to 5 feet bgs.

A tremie pipe will be used to place Type V cement in the open core hole from the bottom of the core hole to the top of the core hole. Cement retainers, as described above, will be used to force cement grout into the annulus and behind perforated intervals, as necessary.

If the hole has been obstructed, as much cement as possible will be placed from 100 feet below the LBFU-bedrock contact to the top of the core hole.

The volume of Type V cement will be recorded and will not be less than the estimated volume of material required to fill each interval. All cement grout will consist of Type V cement, or equivalent approved in accordance with the UIC Permit.

Certification

I certify under the penalty of law that I have personally examined and am familiar with the information submitted in this document and all attachments and that, based on my inquiry of those individuals immediately responsible for obtaining the information, I believe that the information is true, accurate, and complete. I am aware that there are significant penalties for submitting false information, including the possibliity of fine and imprisonment. (Ref. 40 CFR § 144.32)

Name and Official Title *(Please type or print)*	Signature	Date Signed
Dan Johnson, VP - General Manager		10/3/2019

INSTRUCTIONS FOR FORM 7520-19

This form replaces forms 7520-12 and 7520-14. Use this form only when work is planned or has occurred that affects the well's construction or operation as an injection well, including work on the casing, tubing or packer (or for shallow Class V wells, the subsurface fluid emplacement network). Use one form per injection well. While reports or other information developed by contractors or service companies may be attached, this form must be signed by a responsible entity as described at 40 CFR 144.32. Note: operators closing Class V wells should use Form 7520-17.

NAME, ADDRESS, PHONE AND/OR EMAIL OF PERMITTEE: Enter the name and street address, city/town, state, and ZIP code of the permittee. Also provide an email address (if available) and/or a phone number.

PERMIT OR EPA ID NUMBER: Enter the well identification number or permit number assigned to the well by the EPA or the permitting authority.

API NUMBER: Enter the number assigned by the local jurisdiction (usually a State Oil and Gas Agency) using the American Petroleum Institute standard numbering system.

FULL WELL NAME: Enter the full name of the well or project.

Enter the **STATE** and **COUNTY** where the well is located. For States that do not have counties, use the name of that State's equivalent jurisdiction at a more local level.

WELL LOCATION: Fill in the complete township, range, and section to the nearest quarter-quarter section. A township is north or south of the baseline, and a range is east or west of the principal meridian (e.g., T12N, R34W). Also include the distance, in feet, from the nearest north or south line and nearest east or west line of the quarter-section. Also, enter the **latitude** and **longitude** of the well in decimal degrees, to five or six places if possible; be sure to include a negative sign for the longitude of a well in the Western Hemisphere and a negative sign for the latitude of a well in the Southern Hemisphere.

Enter the **WELL CLASS,** i.e., the class of injection well as defined in 40 CFR 144.6.

TIMING OF THE ACTION: Check ***Notice prior to work*** if the activity has not yet occurred (i.e., is planned). Check ***Report after work*** if the activity described has already occurred. As appropriate, include the date the activity is expected to start or the date the activity was completed. (Note this may not be available, e.g., for a plugging plan submitted with a permit application.)

TYPE OF ACTION: Check the appropriate box to describe the kind of activity being reported. Check ***Well Rework*** for work that was/will be performed on the well after it has already been in operation as an injection well. Check ***Plugging and Abandonment*** to report on plans for or descriptions of final closure/plugging after use as an injection well. Check ***Conversion to a Non-Injection Well*** if the well is to be converted to something other than an injection well.

Provide a **NARRATIVE DESCRIPTION** of the work planned to be performed, or that was performed. The narrative should include a description of the main procedures planned or that occurred during the work activity. A service company report, daily report, or similar document may be attached if it includes all the requested information and is clear and legible.

For well reworks, include the following information: The reason for the well rework; depths of activity; type of activity; changes to injection well configuration, well casing, or cement behind casing; any plug added to the well and its depth; any newly drilled interval and its depth; method(s) to demonstrate that the well has mechanical integrity (as applicable); and any deviations from the approved rework plan (as applicable).

For a well plugging plan, include the following information: Reason for the well plugging; number of plugs placed, and their depths; materials used as plugs (e.g., cast iron bridge plug, cement, cement retainer); method to set plugs; and wait-on-cement times, if any. Also provide one or more cost estimates from an independent firm in the business of plugging and abandoning wells to plug the well as described in the plan.

For well plugging affidavit, include the following information: Reason for the well plugging; number of plugs placed, and their depths; materials used as plugs (e.g., cast iron bridge plug, cement, cement retainer); method to set plugs; wait-on-cement times, if any; and any deviations from the approved plugging plan (if applicable).

For conversion to a non-injection well, include the following information: Depths of activity; type of activity; changes to injection well configuration, well casing, or cement behind casing; any plug added to the well and its depth; any newly drilled interval and its depth; depths of new perforations; and method(s) to demonstrate that the well has mechanical integrity (as applicable).

For all of the above activities, include a well sketch depicting the work, results of well tests/logging performed, service company tickets, and any other available information demonstrating how the work was/is to be performed. Also, specify whether depths are below ground surface, relative to Kelly bushing, etc.

CERTIFICATION: This form must be signed and dated by either: a responsible corporate officer for a corporation, by a general partner for a partnership, by the proprietor of a sole proprietorship, or by a principal executive or ranking elected official for a public agency.

PAPERWORK REDUCTION ACT NOTICE: The public reporting and recordkeeping burden for this collection of information is estimated to average between 6.0 and 7.9 hours per response, depending on the injection well class. Burden means the total time, effort, or financial resource expended by persons to generate, maintain, retain, or disclose or provide information to or for a Federal Agency. This includes the time needed to review instructions; develop, acquire, install, and utilize technology and systems for the purposes of collecting, validating, and verifying information, processing and maintaining information, and disclosing and providing information; adjust the existing ways to comply with any previously applicable instructions and requirements; train personnel to be able to respond to the collection of information; search data sources; complete and review the collection of information; and, transmit or otherwise disclose the information. An agency may not conduct or sponsor, and a person is not required to respond to, a collection of information unless it displays a currently valid OMB control number. Send comments on the Agency's need for this information, the accuracy of the provided burden estimates, and any suggested methods for minimizing respondent burden, including the use of automated collection techniques to Director, Collection Strategies Division, U.S. Environmental Protection Agency (2822), 1200 Pennsylvania Ave., NW., Washington, D.C. 20460. Include the OMB control number in any correspondence. Do not send the completed forms to this address.

AS-BUILT COREHOLE MCC425

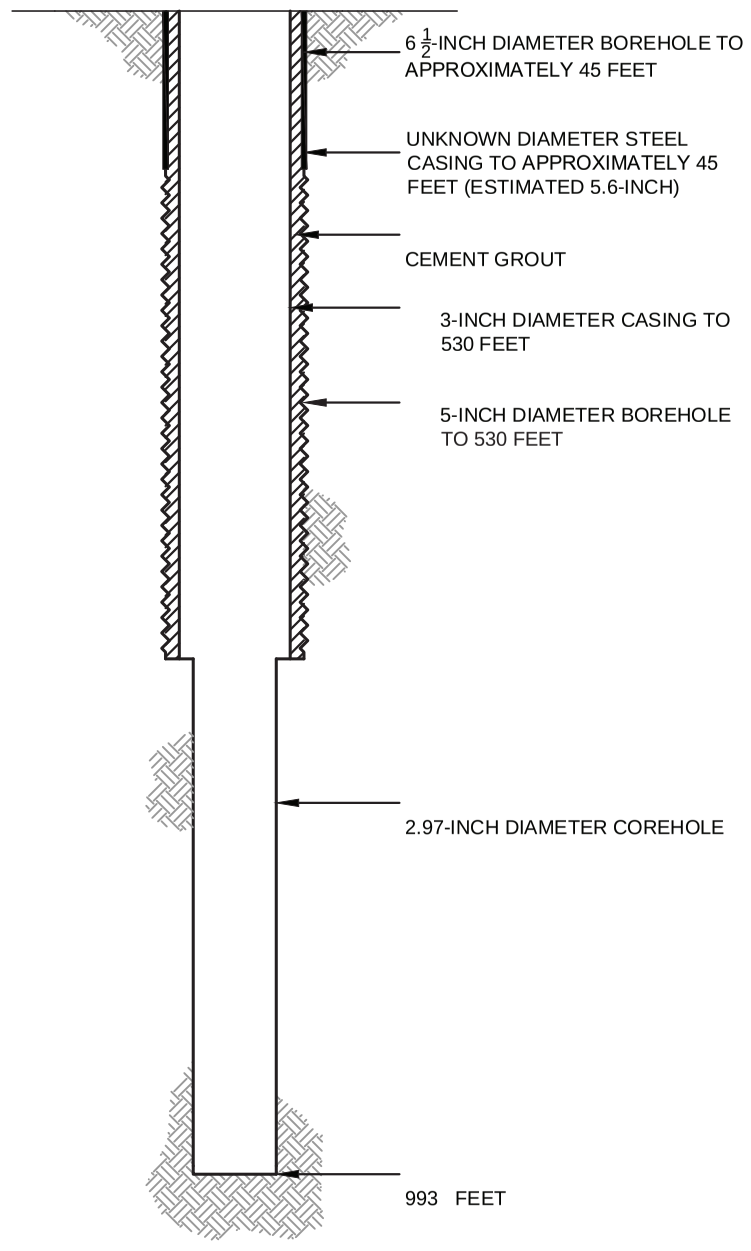

PROPOSED PLUGGING AND ABANDONMENT COREHOLE MCC425

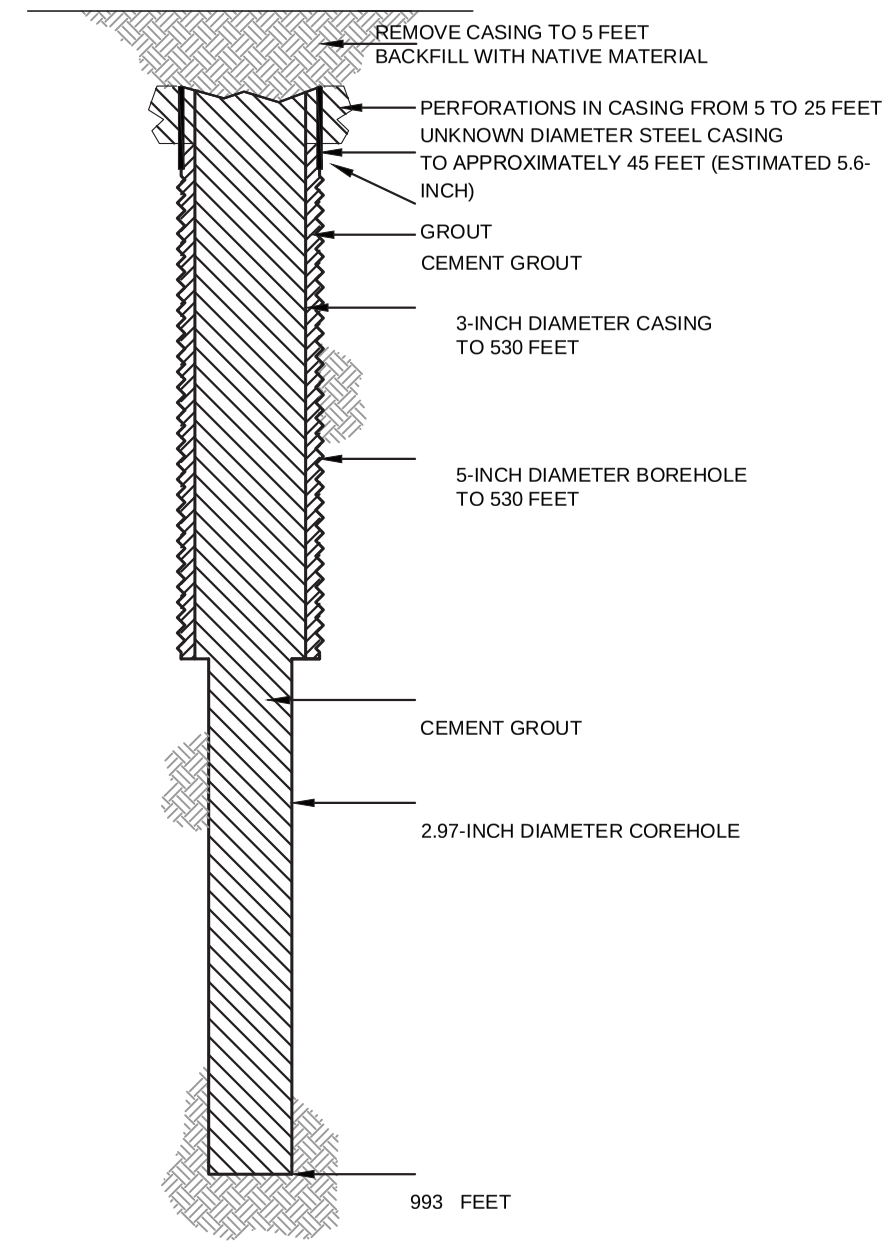

HALEY ALDRICH

FLORENCE COPPER, INC.
FLORENCE, ARIZONA

COREHOLE MCC425 DIAGRAM

FLORENCE COPPER INC.

NOT TO SCALE
SEPTEMBER 2019

FIGURE 1

MOBINI, GITA Printed: 4/21/2017 12:00 PM Layout: ABANDON (2)
\PROJECTS\CURIS RESOURCES38706-CURIS FEASIBILITY\DRAWINGS\EPA\WELL ABANDON\415S_ABANDON.DWG

OMB No. 2040-0042 Approval Expires 4/30/2022

United States Environmental Protection Agency

WELL REWORK RECORD, PLUGGING AND ABANDONMENT PLAN, OR PLUGGING AND ABANDONMENT AFFIDAVIT

Name and Address, Phone Number and/or Email of Permittee

Florence Copper Project
1575 W Hunt Hwy,
Florence, AZ 85132

Permit or EPA ID Number	API Number	Full Well Name
R9UIC-AZ3-FY11-1		MCC426

State	County
Arizona	Pinal

Locate well in two directions from nearest lines of quarter section and drilling unit

Latitude 33.04677707

Surface Location

SE **1/4 of** SW **1/4 of Section** 28 **Township** 4S **Range** 9E

Longitude -111.4301731

_____ **ft. from (N/S)** _____ **Line of quarter section**

_____ **ft. from (E/W)** _____ **Line of quarter section.**

Well Class	Timing of Action (pick one)	Type of Action (pick one)
☐ Class I ☐ Class II ☑ Class III ☐ Class V	☑ Notice Prior to Work Date Expected to Commence March 2021 ☐ Report After Work Date Work Ended	☐ Well Rework ☑ Plugging and Abandonment ☐ Conversion to a Non-Injection Well

Provide a narrative description of the work planned to be performed, or that was performed. Use additional pages as necessary. See instructions.

A workover rig capable of performing the required abandonment operations at the required depths will be moved in and set up over the core hole. The core hole will be inspected to determine the depth to which the hole remains open and if any obstructions are present in the core hole; the presence and condition of any existing collar will also be documented. If necessary, the core hole will be cleaned out to a depth of at least 100 feet below the bedrock-LBFU contact to enable placement of cement seals.

If collar is present, an attempt will be made to remove it. If removal of the collar is not feasible, it will be left in the hole and perforated as needed to allow an annular seal to be placed to a depth of at least 25 feet bgs. In areas of agricultural use, the surface casing will be cut at least 5 feet bgs and removed.

If the collar cannot be removed, it will be perforated from at least 20 feet below the bedrock-LBFU contact to at least 20 feet above the contact; from at least 20 feet below the base of the MFGU to at least 20 feet above the top of the MFGU; and from at least 25 feet bgs to 5 feet bgs.

A tremie pipe will be used to place Type V cement in the open core hole from the bottom of the core hole to the top of the core hole. Cement retainers, as described above, will be used to force cement grout into the annulus and behind perforated intervals, as necessary.

If the hole has been obstructed, as much cement as possible will be placed from 100 feet below the LBFU-bedrock contact to the top of the core hole.

The volume of Type V cement will be recorded and will not be less than the estimated volume of material required to fill each interval. All cement grout will consist of Type V cement, or equivalent approved in accordance with the UIC Permit.

Certification

I certify under the penalty of law that I have personally examined and am familiar with the information submitted in this document and all attachments and that, based on my inquiry of those individuals immediately responsible for obtaining the information, I believe that the information is true, accurate, and complete. I am aware that there are significant penalties for submitting false information, including the possibliity of fine and imprisonment. (Ref. 40 CFR § 144.32)

Name and Official Title *(Please type or print)*	Signature	Date Signed
Dan Johnson, VP - General Manager		10/3/2019

INSTRUCTIONS FOR FORM 7520-19

This form replaces forms 7520-12 and 7520-14. Use this form only when work is planned or has occurred that affects the well's construction or operation as an injection well, including work on the casing, tubing or packer (or for shallow Class V wells, the subsurface fluid emplacement network). Use one form per injection well. While reports or other information developed by contractors or service companies may be attached, this form must be signed by a responsible entity as described at 40 CFR 144.32. Note: operators closing Class V wells should use Form 7520-17.

NAME, ADDRESS, PHONE AND/OR EMAIL OF PERMITTEE: Enter the name and street address, city/town, state, and ZIP code of the permittee. Also provide an email address (if available) and/or a phone number.

PERMIT OR EPA ID NUMBER: Enter the well identification number or permit number assigned to the well by the EPA or the permitting authority.

API NUMBER: Enter the number assigned by the local jurisdiction (usually a State Oil and Gas Agency) using the American Petroleum Institute standard numbering system.

FULL WELL NAME: Enter the full name of the well or project.

Enter the **STATE** and **COUNTY** where the well is located. For States that do not have counties, use the name of that State's equivalent jurisdiction at a more local level.

WELL LOCATION: Fill in the complete township, range, and section to the nearest quarter-quarter section. A township is north or south of the baseline, and a range is east or west of the principal meridian (e.g., T12N, R34W). Also include the distance, in feet, from the nearest north or south line and nearest east or west line of the quarter-section. Also, enter the **latitude** and **longitude** of the well in decimal degrees, to five or six places if possible; be sure to include a negative sign for the longitude of a well in the Western Hemisphere and a negative sign for the latitude of a well in the Southern Hemisphere.

Enter the **WELL CLASS,** i.e., the class of injection well as defined in 40 CFR 144.6.

TIMING OF THE ACTION: Check ***Notice prior to work*** if the activity has not yet occurred (i.e., is planned). Check ***Report after work*** if the activity described has already occurred. As appropriate, include the date the activity is expected to start or the date the activity was completed. (Note this may not be available, e.g., for a plugging plan submitted with a permit application.)

TYPE OF ACTION: Check the appropriate box to describe the kind of activity being reported. Check ***Well Rework*** for work that was/will be performed on the well after it has already been in operation as an injection well. Check ***Plugging and Abandonment*** to report on plans for or descriptions of final closure/plugging after use as an injection well. Check ***Conversion to a Non-Injection Well*** if the well is to be converted to something other than an injection well.

Provide a **NARRATIVE DESCRIPTION** of the work planned to be performed, or that was performed. The narrative should include a description of the main procedures planned or that occurred during the work activity. A service company report, daily report, or similar document may be attached if it includes all the requested information and is clear and legible.

For well reworks, include the following information: The reason for the well rework; depths of activity; type of activity; changes to injection well configuration, well casing, or cement behind casing; any plug added to the well and its depth; any newly drilled interval and its depth; method(s) to demonstrate that the well has mechanical integrity (as applicable); and any deviations from the approved rework plan (as applicable).

For a well plugging plan, include the following information: Reason for the well plugging; number of plugs placed, and their depths; materials used as plugs (e.g., cast iron bridge plug, cement, cement retainer); method to set plugs; and wait-on-cement times, if any. Also provide one or more cost estimates from an independent firm in the business of plugging and abandoning wells to plug the well as described in the plan.

For well plugging affidavit, include the following information: Reason for the well plugging; number of plugs placed, and their depths; materials used as plugs (e.g., cast iron bridge plug, cement, cement retainer); method to set plugs; wait-on-cement times, if any; and any deviations from the approved plugging plan (if applicable).

For conversion to a non-injection well, include the following information: Depths of activity; type of activity; changes to injection well configuration, well casing, or cement behind casing; any plug added to the well and its depth; any newly drilled interval and its depth; depths of new perforations; and method(s) to demonstrate that the well has mechanical integrity (as applicable).

For all of the above activities, include a well sketch depicting the work, results of well tests/logging performed, service company tickets, and any other available information demonstrating how the work was/is to be performed. Also, specify whether depths are below ground surface, relative to Kelly bushing, etc.

CERTIFICATION: This form must be signed and dated by either: a responsible corporate officer for a corporation, by a general partner for a partnership, by the proprietor of a sole proprietorship, or by a principal executive or ranking elected official for a public agency.

PAPERWORK REDUCTION ACT NOTICE: The public reporting and recordkeeping burden for this collection of information is estimated to average between 6.0 and 7.9 hours per response, depending on the injection well class. Burden means the total time, effort, or financial resource expended by persons to generate, maintain, retain, or disclose or provide information to or for a Federal Agency. This includes the time needed to review instructions; develop, acquire, install, and utilize technology and systems for the purposes of collecting, validating, and verifying information, processing and maintaining information, and disclosing and providing information; adjust the existing ways to comply with any previously applicable instructions and requirements; train personnel to be able to respond to the collection of information; search data sources; complete and review the collection of information; and, transmit or otherwise disclose the information. An agency may not conduct or sponsor, and a person is not required to respond to, a collection of information unless it displays a currently valid OMB control number. Send comments on the Agency's need for this information, the accuracy of the provided burden estimates, and any suggested methods for minimizing respondent burden, including the use of automated collection techniques to Director, Collection Strategies Division, U.S. Environmental Protection Agency (2822), 1200 Pennsylvania Ave., NW., Washington, D.C. 20460. Include the OMB control number in any correspondence. Do not send the completed forms to this address.

AS-BUILT COREHOLE MCC426

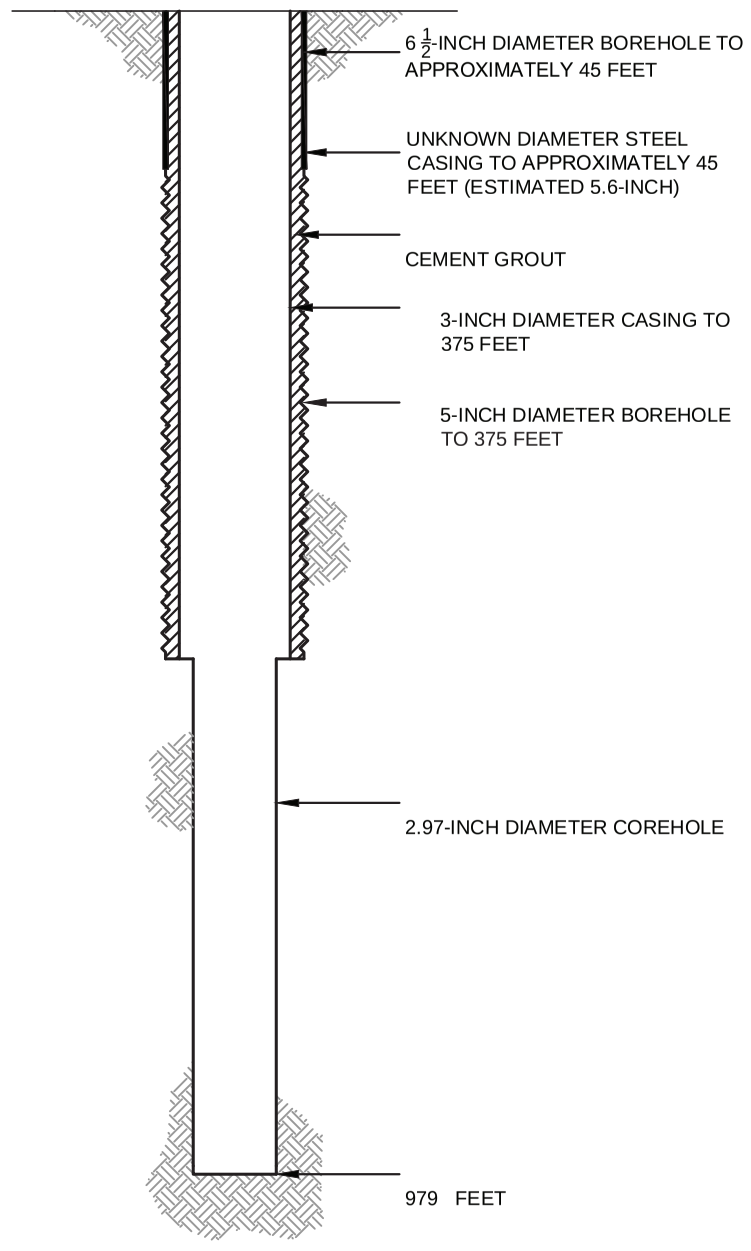

PROPOSED PLUGGING AND ABANDONMENT COREHOLE MCC426

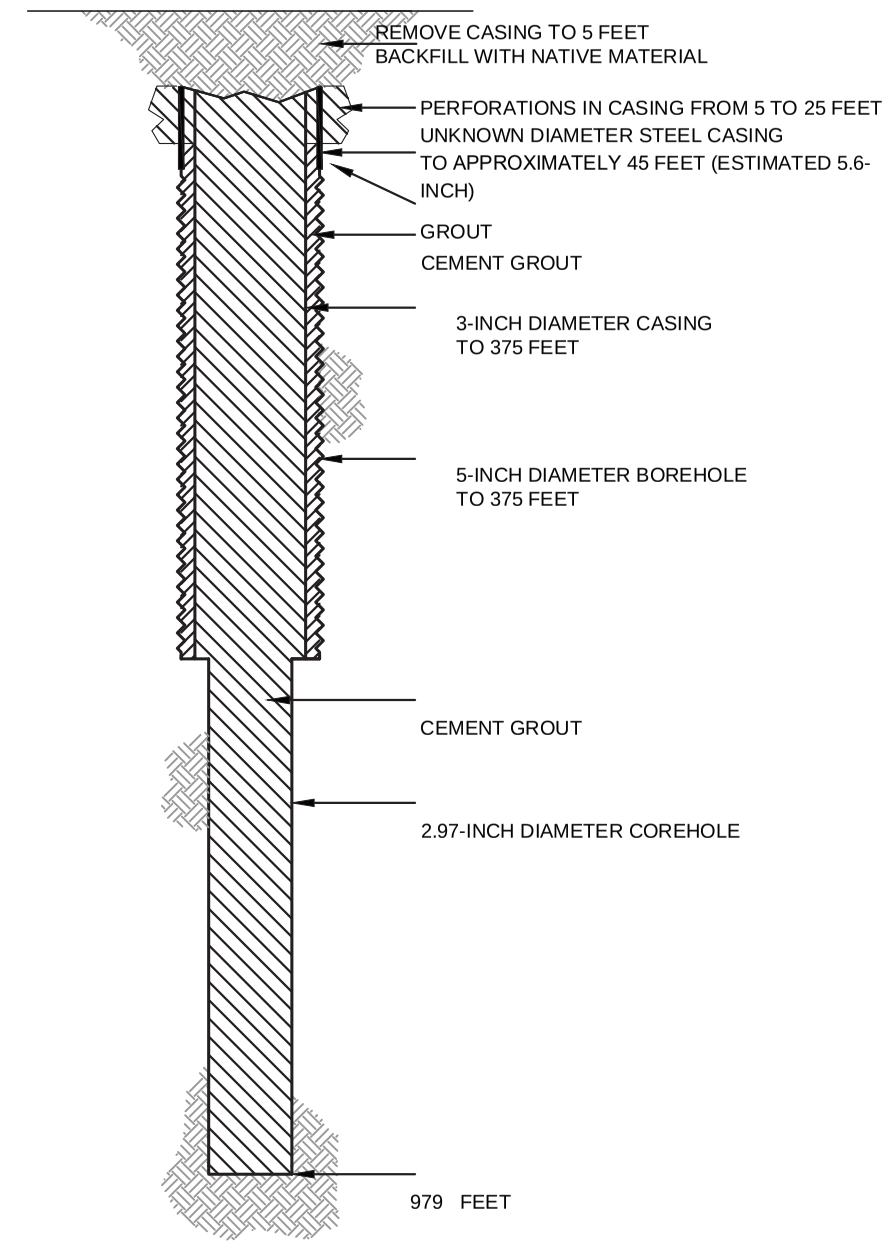

HALEY ALDRICH

FLORENCE COPPER, INC.
FLORENCE, ARIZONA

COREHOLE MCC426 DIAGRAM

FLORENCE COPPER INC.

NOT TO SCALE
SEPTEMBER 2019

FIGURE 1

MOBINI, GITA Printed: 4/21/2017 12:00 PM Layout: ABANDON (2)
\PROJECTS\CURIS RESOURCES38706-CURIS FEASIBILITY\DRAWINGS\EPA\WELL ABANDON\415S_ABANDON.DWG

OMB No. 2040-0042 Approval Expires 4/30/2022

United States Environmental Protection Agency

EPA

WELL REWORK RECORD, PLUGGING AND ABANDONMENT PLAN, OR PLUGGING AND ABANDONMENT AFFIDAVIT

Name and Address, Phone Number and/or Email of Permittee

Florence Copper Project
1575 W Hunt Hwy,
Florence, AZ 85132

Permit or EPA ID Number	API Number	Full Well Name
R9UIC-AZ3-FY11-1		MCC427

State	County
Arizona	Pinal

Locate well in two directions from nearest lines of quarter section and drilling unit

Latitude 33.04677389

Surface Location

SW **1/4 of** SE **1/4 of Section** 28 **Township** 4S **Range** 9E

Longitude -111.4293573

_____ **ft. from (N/S)** _____ **Line of quarter section**

_____ **ft. from (E/W)** _____ **Line of quarter section.**

Well Class	Timing of Action (pick one)	Type of Action (pick one)
☐ Class I ☐ Class II ☑ Class III ☐ Class V	☑ Notice Prior to Work Date Expected to Commence March 2021 ☐ Report After Work Date Work Ended	☐ Well Rework ☑ Plugging and Abandonment ☐ Conversion to a Non-Injection Well

Provide a narrative description of the work planned to be performed, or that was performed. Use additional pages as necessary. See instructions.

A workover rig capable of performing the required abandonment operations at the required depths will be moved in and set up over the core hole. The core hole will be inspected to determine the depth to which the hole remains open and if any obstructions are present in the core hole; the presence and condition of any existing collar will also be documented. If necessary, the core hole will be cleaned out to a depth of at least 100 feet below the bedrock-LBFU contact to enable placement of cement seals.

If collar is present, an attempt will be made to remove it. If removal of the collar is not feasible, it will be left in the hole and perforated as needed to allow an annular seal to be placed to a depth of at least 25 feet bgs. In areas of agricultural use, the surface casing will be cut at least 5 feet bgs and removed.

If the collar cannot be removed, it will be perforated from at least 20 feet below the bedrock-LBFU contact to at least 20 feet above the contact; from at least 20 feet below the base of the MFGU to at least 20 feet above the top of the MFGU; and from at least 25 feet bgs to 5 feet bgs.

A tremie pipe will be used to place Type V cement in the open core hole from the bottom of the core hole to the top of the core hole. Cement retainers, as described above, will be used to force cement grout into the annulus and behind perforated intervals, as necessary.

If the hole has been obstructed, as much cement as possible will be placed from 100 feet below the LBFU-bedrock contact to the top of the core hole.

The volume of Type V cement will be recorded and will not be less than the estimated volume of material required to fill each interval. All cement grout will consist of Type V cement, or equivalent approved in accordance with the UIC Permit.

Certification

I certify under the penalty of law that I have personally examined and am familiar with the information submitted in this document and all attachments and that, based on my inquiry of those individuals immediately responsible for obtaining the information, I believe that the information is true, accurate, and complete. I am aware that there are significant penalties for submitting false information, including the possibliity of fine and imprisonment. (Ref. 40 CFR § 144.32)

Name and Official Title *(Please type or print)*	Signature	Date Signed
Dan Johnson, VP - General Manager		10/3/2019

INSTRUCTIONS FOR FORM 7520-19

This form replaces forms 7520-12 and 7520-14. Use this form only when work is planned or has occurred that affects the well's construction or operation as an injection well, including work on the casing, tubing or packer (or for shallow Class V wells, the subsurface fluid emplacement network). Use one form per injection well. While reports or other information developed by contractors or service companies may be attached, this form must be signed by a responsible entity as described at 40 CFR 144.32. Note: operators closing Class V wells should use Form 7520-17.

NAME, ADDRESS, PHONE AND/OR EMAIL OF PERMITTEE: Enter the name and street address, city/town, state, and ZIP code of the permittee. Also provide an email address (if available) and/or a phone number.

PERMIT OR EPA ID NUMBER: Enter the well identification number or permit number assigned to the well by the EPA or the permitting authority.

API NUMBER: Enter the number assigned by the local jurisdiction (usually a State Oil and Gas Agency) using the American Petroleum Institute standard numbering system.

FULL WELL NAME: Enter the full name of the well or project.

Enter the **STATE** and **COUNTY** where the well is located. For States that do not have counties, use the name of that State's equivalent jurisdiction at a more local level.

WELL LOCATION: Fill in the complete township, range, and section to the nearest quarter-quarter section. A township is north or south of the baseline, and a range is east or west of the principal meridian (e.g., T12N, R34W). Also include the distance, in feet, from the nearest north or south line and nearest east or west line of the quarter-section. Also, enter the **latitude** and **longitude** of the well in decimal degrees, to five or six places if possible; be sure to include a negative sign for the longitude of a well in the Western Hemisphere and a negative sign for the latitude of a well in the Southern Hemisphere.

Enter the **WELL CLASS,** i.e., the class of injection well as defined in 40 CFR 144.6.

TIMING OF THE ACTION: Check ***Notice prior to work*** if the activity has not yet occurred (i.e., is planned). Check ***Report after work*** if the activity described has already occurred. As appropriate, include the date the activity is expected to start or the date the activity was completed. (Note this may not be available, e.g., for a plugging plan submitted with a permit application.)

TYPE OF ACTION: Check the appropriate box to describe the kind of activity being reported. Check ***Well Rework*** for work that was/will be performed on the well after it has already been in operation as an injection well. Check ***Plugging and Abandonment*** to report on plans for or descriptions of final closure/plugging after use as an injection well. Check ***Conversion to a Non-Injection Well*** if the well is to be converted to something other than an injection well.

Provide a **NARRATIVE DESCRIPTION** of the work planned to be performed, or that was performed. The narrative should include a description of the main procedures planned or that occurred during the work activity. A service company report, daily report, or similar document may be attached if it includes all the requested information and is clear and legible.

For well reworks, include the following information: The reason for the well rework; depths of activity; type of activity; changes to injection well configuration, well casing, or cement behind casing; any plug added to the well and its depth; any newly drilled interval and its depth; method(s) to demonstrate that the well has mechanical integrity (as applicable); and any deviations from the approved rework plan (as applicable).

For a well plugging plan, include the following information: Reason for the well plugging; number of plugs placed, and their depths; materials used as plugs (e.g., cast iron bridge plug, cement, cement retainer); method to set plugs; and wait-on-cement times, if any. Also provide one or more cost estimates from an independent firm in the business of plugging and abandoning wells to plug the well as described in the plan.

For well plugging affidavit, include the following information: Reason for the well plugging; number of plugs placed, and their depths; materials used as plugs (e.g., cast iron bridge plug, cement, cement retainer); method to set plugs; wait-on-cement times, if any; and any deviations from the approved plugging plan (if applicable).

For conversion to a non-injection well, include the following information: Depths of activity; type of activity; changes to injection well configuration, well casing, or cement behind casing; any plug added to the well and its depth; any newly drilled interval and its depth; depths of new perforations; and method(s) to demonstrate that the well has mechanical integrity (as applicable).

For all of the above activities, include a well sketch depicting the work, results of well tests/logging performed, service company tickets, and any other available information demonstrating how the work was/is to be performed. Also, specify whether depths are below ground surface, relative to Kelly bushing, etc.

CERTIFICATION: This form must be signed and dated by either: a responsible corporate officer for a corporation, by a general partner for a partnership, by the proprietor of a sole proprietorship, or by a principal executive or ranking elected official for a public agency.

PAPERWORK REDUCTION ACT NOTICE: The public reporting and recordkeeping burden for this collection of information is estimated to average between 6.0 and 7.9 hours per response, depending on the injection well class. Burden means the total time, effort, or financial resource expended by persons to generate, maintain, retain, or disclose or provide information to or for a Federal Agency. This includes the time needed to review instructions; develop, acquire, install, and utilize technology and systems for the purposes of collecting, validating, and verifying information, processing and maintaining information, and disclosing and providing information; adjust the existing ways to comply with any previously applicable instructions and requirements; train personnel to be able to respond to the collection of information; search data sources; complete and review the collection of information; and, transmit or otherwise disclose the information. An agency may not conduct or sponsor, and a person is not required to respond to, a collection of information unless it displays a currently valid OMB control number. Send comments on the Agency's need for this information, the accuracy of the provided burden estimates, and any suggested methods for minimizing respondent burden, including the use of automated collection techniques to Director, Collection Strategies Division, U.S. Environmental Protection Agency (2822), 1200 Pennsylvania Ave., NW., Washington, D.C. 20460. Include the OMB control number in any correspondence. Do not send the completed forms to this address.

AS-BUILT COREHOLE MCC427

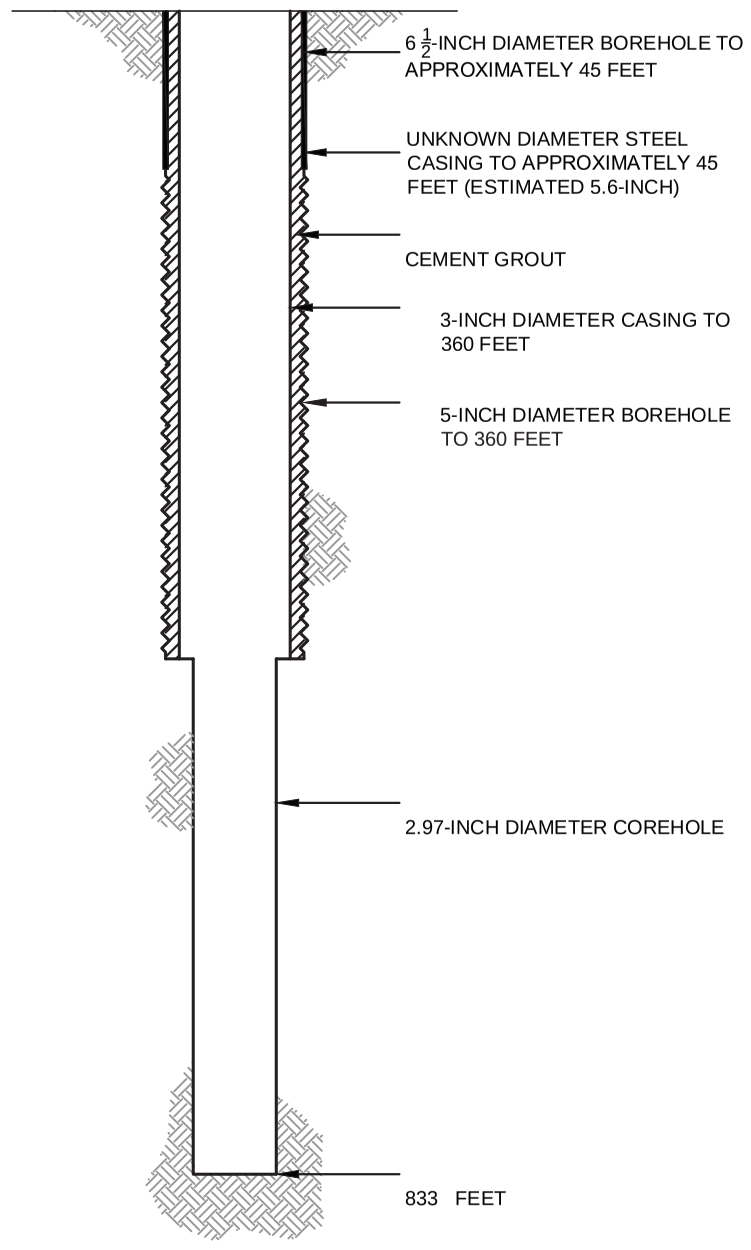

PROPOSED PLUGGING AND ABANDONMENT COREHOLE MCC427

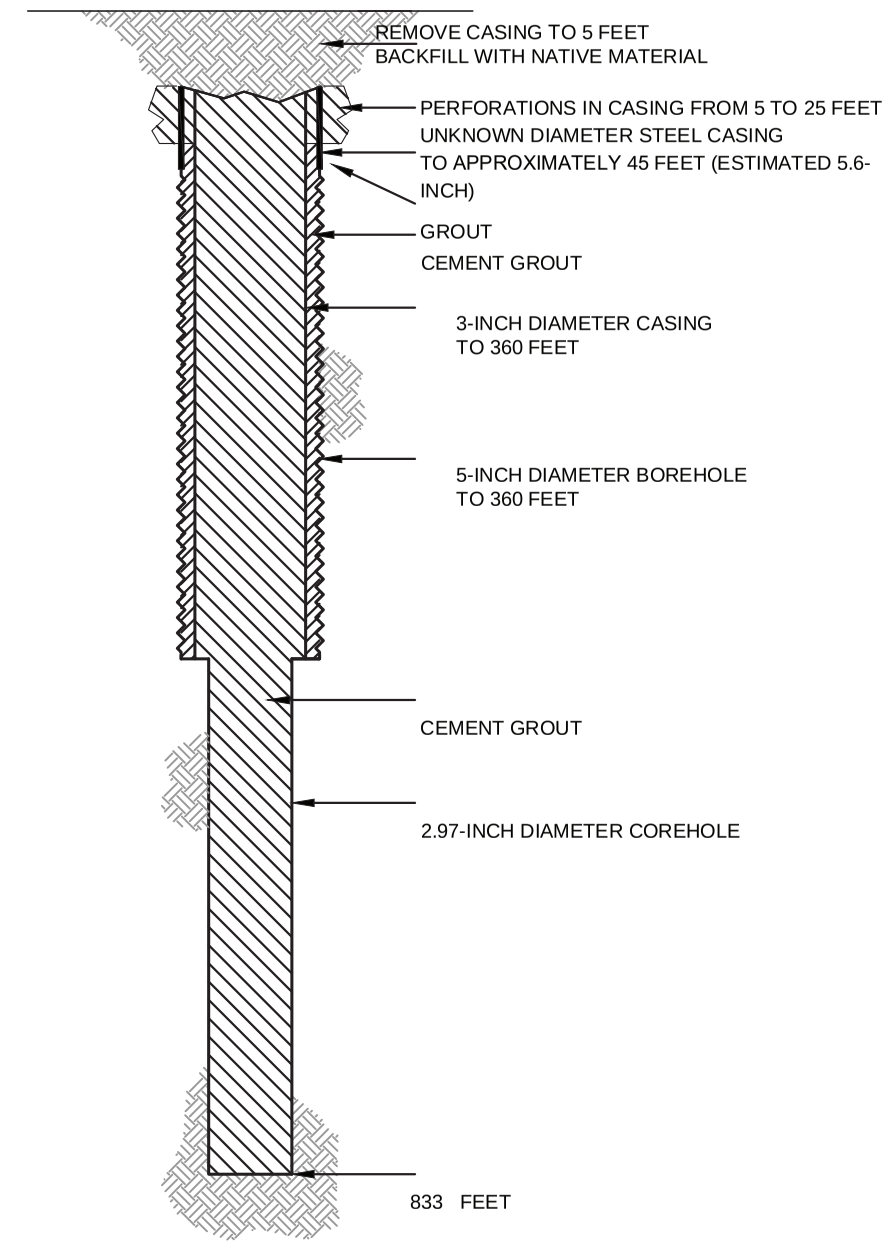

HALEY ALDRICH

FLORENCE COPPER, INC.
FLORENCE, ARIZONA

COREHOLE MCC427 DIAGRAM

FLORENCE COPPER INC.

NOT TO SCALE
SEPTEMBER 2019

FIGURE 1

MOBINI, GITA Printed: 4/21/2017 12:00 PM Layout: ABANDON (2)
\PROJECTS\CURIS RESOURCES38706-CURIS FEASIBILITY\DRAWINGS\EPA\WELL ABANDON\415S_ABANDON.DWG

OMB No. 2040-0042 Approval Expires 4/30/2022

United States Environmental Protection Agency

WELL REWORK RECORD, PLUGGING AND ABANDONMENT PLAN, OR PLUGGING AND ABANDONMENT AFFIDAVIT

Name and Address, Phone Number and/or Email of Permittee

Florence Copper Project
1575 W Hunt Hwy,
Florence, AZ 85132

Permit or EPA ID Number	API Number	Full Well Name
R9UIC-AZ3-FY11-1		MCC434

State	County
Arizona	Pinal

Locate well in two directions from nearest lines of quarter section and drilling unit

Latitude 33.0461836

Longitude -111.4305843

Surface Location

SE **1/4 of** SW **1/4 of Section** 28 **Township** 4S **Range** 9E

_____ **ft. from (N/S)** _____ **Line of quarter section**

_____ **ft. from (E/W)** _____ **Line of quarter section.**

Well Class	Timing of Action (pick one)	Type of Action (pick one)
☐ Class I ☐ Class II ☑ Class III ☐ Class V	☑ Notice Prior to Work Date Expected to Commence March 2021 ☐ Report After Work Date Work Ended	☐ Well Rework ☑ Plugging and Abandonment ☐ Conversion to a Non-Injection Well

Provide a narrative description of the work planned to be performed, or that was performed. Use additional pages as necessary. See instructions.

A workover rig capable of performing the required abandonment operations at the required depths will be moved in and set up over the core hole. The core hole will be inspected to determine the depth to which the hole remains open and if any obstructions are present in the core hole; the presence and condition of any existing collar will also be documented. If necessary, the core hole will be cleaned out to a depth of at least 100 feet below the bedrock-LBFU contact to enable placement of cement seals.

If collar is present, an attempt will be made to remove it. If removal of the collar is not feasible, it will be left in the hole and perforated as needed to allow an annular seal to be placed to a depth of at least 25 feet bgs. In areas of agricultural use, the surface casing will be cut at least 5 feet bgs and removed.

If the collar cannot be removed, it will be perforated from at least 20 feet below the bedrock-LBFU contact to at least 20 feet above the contact; from at least 20 feet below the base of the MFGU to at least 20 feet above the top of the MFGU; and from at least 25 feet bgs to 5 feet bgs.

A tremie pipe will be used to place Type V cement in the open core hole from the bottom of the core hole to the top of the core hole. Cement retainers, as described above, will be used to force cement grout into the annulus and behind perforated intervals, as necessary.

If the hole has been obstructed, as much cement as possible will be placed from 100 feet below the LBFU-bedrock contact to the top of the core hole.

The volume of Type V cement will be recorded and will not be less than the estimated volume of material required to fill each interval. All cement grout will consist of Type V cement, or equivalent approved in accordance with the UIC Permit.

Certification

I certify under the penalty of law that I have personally examined and am familiar with the information submitted in this document and all attachments and that, based on my inquiry of those individuals immediately responsible for obtaining the information, I believe that the information is true, accurate, and complete. I am aware that there are significant penalties for submitting false information, including the possibliity of fine and imprisonment. (Ref. 40 CFR § 144.32)

Name and Official Title *(Please type or print)*	Signature	Date Signed
Dan Johnson, VP - General Manager		10/3/2019

INSTRUCTIONS FOR FORM 7520-19

This form replaces forms 7520-12 and 7520-14. Use this form only when work is planned or has occurred that affects the well's construction or operation as an injection well, including work on the casing, tubing or packer (or for shallow Class V wells, the subsurface fluid emplacement network). Use one form per injection well. While reports or other information developed by contractors or service companies may be attached, this form must be signed by a responsible entity as described at 40 CFR 144.32. Note: operators closing Class V wells should use Form 7520-17.

NAME, ADDRESS, PHONE AND/OR EMAIL OF PERMITTEE: Enter the name and street address, city/town, state, and ZIP code of the permittee. Also provide an email address (if available) and/or a phone number.

PERMIT OR EPA ID NUMBER: Enter the well identification number or permit number assigned to the well by the EPA or the permitting authority.

API NUMBER: Enter the number assigned by the local jurisdiction (usually a State Oil and Gas Agency) using the American Petroleum Institute standard numbering system.

FULL WELL NAME: Enter the full name of the well or project.

Enter the **STATE** and **COUNTY** where the well is located. For States that do not have counties, use the name of that State's equivalent jurisdiction at a more local level.

WELL LOCATION: Fill in the complete township, range, and section to the nearest quarter-quarter section. A township is north or south of the baseline, and a range is east or west of the principal meridian (e.g., T12N, R34W). Also include the distance, in feet, from the nearest north or south line and nearest east or west line of the quarter-section. Also, enter the **latitude** and **longitude** of the well in decimal degrees, to five or six places if possible; be sure to include a negative sign for the longitude of a well in the Western Hemisphere and a negative sign for the latitude of a well in the Southern Hemisphere.

Enter the **WELL CLASS,** i.e., the class of injection well as defined in 40 CFR 144.6.

TIMING OF THE ACTION: Check ***Notice prior to work*** if the activity has not yet occurred (i.e., is planned). Check ***Report after work*** if the activity described has already occurred. As appropriate, include the date the activity is expected to start or the date the activity was completed. (Note this may not be available, e.g., for a plugging plan submitted with a permit application.)

TYPE OF ACTION: Check the appropriate box to describe the kind of activity being reported. Check ***Well Rework*** for work that was/will be performed on the well after it has already been in operation as an injection well. Check ***Plugging and Abandonment*** to report on plans for or descriptions of final closure/plugging after use as an injection well. Check ***Conversion to a Non-Injection Well*** if the well is to be converted to something other than an injection well.

Provide a **NARRATIVE DESCRIPTION** of the work planned to be performed, or that was performed. The narrative should include a description of the main procedures planned or that occurred during the work activity. A service company report, daily report, or similar document may be attached if it includes all the requested information and is clear and legible.

For well reworks, include the following information: The reason for the well rework; depths of activity; type of activity; changes to injection well configuration, well casing, or cement behind casing; any plug added to the well and its depth; any newly drilled interval and its depth; method(s) to demonstrate that the well has mechanical integrity (as applicable); and any deviations from the approved rework plan (as applicable).

For a well plugging plan, include the following information: Reason for the well plugging; number of plugs placed, and their depths; materials used as plugs (e.g., cast iron bridge plug, cement, cement retainer); method to set plugs; and wait-on-cement times, if any. Also provide one or more cost estimates from an independent firm in the business of plugging and abandoning wells to plug the well as described in the plan.

For well plugging affidavit, include the following information: Reason for the well plugging; number of plugs placed, and their depths; materials used as plugs (e.g., cast iron bridge plug, cement, cement retainer); method to set plugs; wait-on-cement times, if any; and any deviations from the approved plugging plan (if applicable).

For conversion to a non-injection well, include the following information: Depths of activity; type of activity; changes to injection well configuration, well casing, or cement behind casing; any plug added to the well and its depth; any newly drilled interval and its depth; depths of new perforations; and method(s) to demonstrate that the well has mechanical integrity (as applicable).

For all of the above activities, include a well sketch depicting the work, results of well tests/logging performed, service company tickets, and any other available information demonstrating how the work was/is to be performed. Also, specify whether depths are below ground surface, relative to Kelly bushing, etc.

CERTIFICATION: This form must be signed and dated by either: a responsible corporate officer for a corporation, by a general partner for a partnership, by the proprietor of a sole proprietorship, or by a principal executive or ranking elected official for a public agency.

PAPERWORK REDUCTION ACT NOTICE: The public reporting and recordkeeping burden for this collection of information is estimated to average between 6.0 and 7.9 hours per response, depending on the injection well class. Burden means the total time, effort, or financial resource expended by persons to generate, maintain, retain, or disclose or provide information to or for a Federal Agency. This includes the time needed to review instructions; develop, acquire, install, and utilize technology and systems for the purposes of collecting, validating, and verifying information, processing and maintaining information, and disclosing and providing information; adjust the existing ways to comply with any previously applicable instructions and requirements; train personnel to be able to respond to the collection of information; search data sources; complete and review the collection of information; and, transmit or otherwise disclose the information. An agency may not conduct or sponsor, and a person is not required to respond to, a collection of information unless it displays a currently valid OMB control number. Send comments on the Agency's need for this information, the accuracy of the provided burden estimates, and any suggested methods for minimizing respondent burden, including the use of automated collection techniques to Director, Collection Strategies Division, U.S. Environmental Protection Agency (2822), 1200 Pennsylvania Ave., NW., Washington, D.C. 20460. Include the OMB control number in any correspondence. Do not send the completed forms to this address.

AS-BUILT COREHOLE MCC434

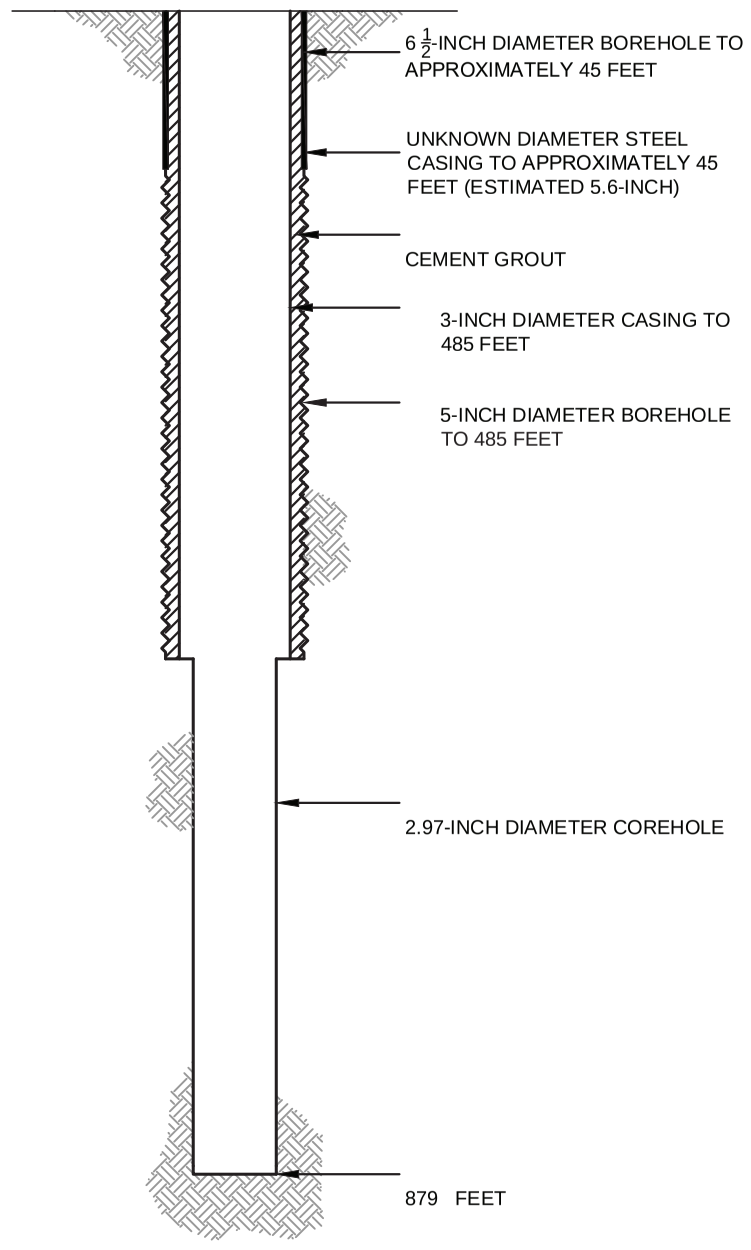

PROPOSED PLUGGING AND ABANDONMENT COREHOLE MCC434

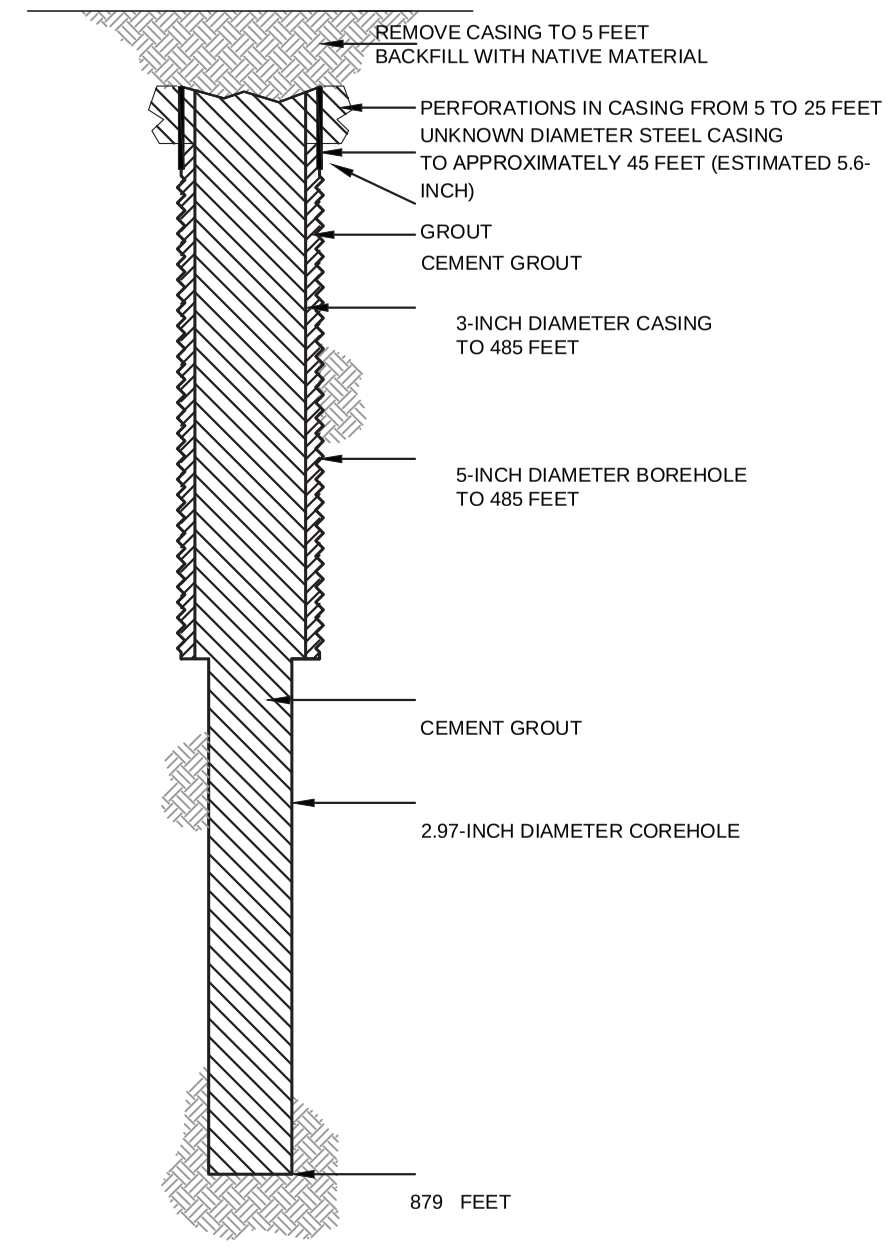

HALEY ALDRICH

FLORENCE COPPER, INC.
FLORENCE, ARIZONA

COREHOLE MCC434 DIAGRAM

FLORENCE COPPER INC.

NOT TO SCALE
SEPTEMBER 2019

FIGURE 1

MOBINI, GITA Printed: 4/21/2017 12:00 PM Layout: ABANDON (2)
\PROJECTS\CURIS RESOURCES38706-CURIS FEASIBILITY\DRAWINGS\EPA\WELL ABANDON\415S_ABANDON.DWG

OMB No. 2040-0042 Approval Expires 4/30/2022

United States Environmental Protection Agency

WELL REWORK RECORD, PLUGGING AND ABANDONMENT PLAN, OR PLUGGING AND ABANDONMENT AFFIDAVIT

Name and Address, Phone Number and/or Email of Permittee

Florence Copper Project
1575 W Hunt Hwy,
Florence, AZ 85132

Permit or EPA ID Number	API Number	Full Well Name
R9UIC-AZ3-FY11-1		MCC519

State	County
Arizona	Pinal

Locate well in two directions from nearest lines of quarter section and drilling unit

Latitude 33.05049953

Longitude -111.4271547

Surface Location

NW **1/4 of** SE **1/4 of Section** 28 **Township** 4S **Range** 9E

_____ **ft. from (N/S)** _____ **Line of quarter section**

_____ **ft. from (E/W)** _____ **Line of quarter section.**

Well Class	Timing of Action (pick one)	Type of Action (pick one)
☐ Class I ☐ Class II ☑ Class III ☐ Class V	☑ Notice Prior to Work Date Expected to Commence March 2021 ☐ Report After Work Date Work Ended	☐ Well Rework ☑ Plugging and Abandonment ☐ Conversion to a Non-Injection Well

Provide a narrative description of the work planned to be performed, or that was performed. Use additional pages as necessary. See instructions.

A workover rig capable of performing the required abandonment operations at the required depths will be moved in and set up over the core hole. The core hole will be inspected to determine the depth to which the hole remains open and if any obstructions are present in the core hole; the presence and condition of any existing collar will also be documented. If necessary, the core hole will be cleaned out to a depth of at least 100 feet below the bedrock-LBFU contact to enable placement of cement seals.

If collar is present, an attempt will be made to remove it. If removal of the collar is not feasible, it will be left in the hole and perforated as needed to allow an annular seal to be placed to a depth of at least 25 feet bgs. In areas of agricultural use, the surface casing will be cut at least 5 feet bgs and removed.

If the collar cannot be removed, it will be perforated from at least 20 feet below the bedrock-LBFU contact to at least 20 feet above the contact; from at least 20 feet below the base of the MFGU to at least 20 feet above the top of the MFGU; and from at least 25 feet bgs to 5 feet bgs.

A tremie pipe will be used to place Type V cement in the open core hole from the bottom of the core hole to the top of the core hole. Cement retainers, as described above, will be used to force cement grout into the annulus and behind perforated intervals, as necessary.

If the hole has been obstructed, as much cement as possible will be placed from 100 feet below the LBFU-bedrock contact to the top of the core hole.

The volume of Type V cement will be recorded and will not be less than the estimated volume of material required to fill each interval. All cement grout will consist of Type V cement, or equivalent approved in accordance with the UIC Permit.

Certification

I certify under the penalty of law that I have personally examined and am familiar with the information submitted in this document and all attachments and that, based on my inquiry of those individuals immediately responsible for obtaining the information, I believe that the information is true, accurate, and complete. I am aware that there are significant penalties for submitting false information, including the possibliity of fine and imprisonment. (Ref. 40 CFR § 144.32)

Name and Official Title *(Please type or print)*	Signature	Date Signed
Dan Johnson, VP - General Manager		10/3/2019

INSTRUCTIONS FOR FORM 7520-19

This form replaces forms 7520-12 and 7520-14. Use this form only when work is planned or has occurred that affects the well's construction or operation as an injection well, including work on the casing, tubing or packer (or for shallow Class V wells, the subsurface fluid emplacement network). Use one form per injection well. While reports or other information developed by contractors or service companies may be attached, this form must be signed by a responsible entity as described at 40 CFR 144.32. Note: operators closing Class V wells should use Form 7520-17.

NAME, ADDRESS, PHONE AND/OR EMAIL OF PERMITTEE: Enter the name and street address, city/town, state, and ZIP code of the permittee. Also provide an email address (if available) and/or a phone number.

PERMIT OR EPA ID NUMBER: Enter the well identification number or permit number assigned to the well by the EPA or the permitting authority.

API NUMBER: Enter the number assigned by the local jurisdiction (usually a State Oil and Gas Agency) using the American Petroleum Institute standard numbering system.

FULL WELL NAME: Enter the full name of the well or project.

Enter the **STATE** and **COUNTY** where the well is located. For States that do not have counties, use the name of that State's equivalent jurisdiction at a more local level.

WELL LOCATION: Fill in the complete township, range, and section to the nearest quarter-quarter section. A township is north or south of the baseline, and a range is east or west of the principal meridian (e.g., T12N, R34W). Also include the distance, in feet, from the nearest north or south line and nearest east or west line of the quarter-section. Also, enter the **latitude** and **longitude** of the well in decimal degrees, to five or six places if possible; be sure to include a negative sign for the longitude of a well in the Western Hemisphere and a negative sign for the latitude of a well in the Southern Hemisphere.

Enter the **WELL CLASS,** i.e., the class of injection well as defined in 40 CFR 144.6.

TIMING OF THE ACTION: Check ***Notice prior to work*** if the activity has not yet occurred (i.e., is planned). Check ***Report after work*** if the activity described has already occurred. As appropriate, include the date the activity is expected to start or the date the activity was completed. (Note this may not be available, e.g., for a plugging plan submitted with a permit application.)

TYPE OF ACTION: Check the appropriate box to describe the kind of activity being reported. Check ***Well Rework*** for work that was/will be performed on the well after it has already been in operation as an injection well. Check ***Plugging and Abandonment*** to report on plans for or descriptions of final closure/plugging after use as an injection well. Check ***Conversion to a Non-Injection Well*** if the well is to be converted to something other than an injection well.

Provide a **NARRATIVE DESCRIPTION** of the work planned to be performed, or that was performed. The narrative should include a description of the main procedures planned or that occurred during the work activity. A service company report, daily report, or similar document may be attached if it includes all the requested information and is clear and legible.

For well reworks, include the following information: The reason for the well rework; depths of activity; type of activity; changes to injection well configuration, well casing, or cement behind casing; any plug added to the well and its depth; any newly drilled interval and its depth; method(s) to demonstrate that the well has mechanical integrity (as applicable); and any deviations from the approved rework plan (as applicable).

For a well plugging plan, include the following information: Reason for the well plugging; number of plugs placed, and their depths; materials used as plugs (e.g., cast iron bridge plug, cement, cement retainer); method to set plugs; and wait-on-cement times, if any. Also provide one or more cost estimates from an independent firm in the business of plugging and abandoning wells to plug the well as described in the plan.

For well plugging affidavit, include the following information: Reason for the well plugging; number of plugs placed, and their depths; materials used as plugs (e.g., cast iron bridge plug, cement, cement retainer); method to set plugs; wait-on-cement times, if any; and any deviations from the approved plugging plan (if applicable).

For conversion to a non-injection well, include the following information: Depths of activity; type of activity; changes to injection well configuration, well casing, or cement behind casing; any plug added to the well and its depth; any newly drilled interval and its depth; depths of new perforations; and method(s) to demonstrate that the well has mechanical integrity (as applicable).

For all of the above activities, include a well sketch depicting the work, results of well tests/logging performed, service company tickets, and any other available information demonstrating how the work was/is to be performed. Also, specify whether depths are below ground surface, relative to Kelly bushing, etc.

CERTIFICATION: This form must be signed and dated by either: a responsible corporate officer for a corporation, by a general partner for a partnership, by the proprietor of a sole proprietorship, or by a principal executive or ranking elected official for a public agency.

PAPERWORK REDUCTION ACT NOTICE: The public reporting and recordkeeping burden for this collection of information is estimated to average between 6.0 and 7.9 hours per response, depending on the injection well class. Burden means the total time, effort, or financial resource expended by persons to generate, maintain, retain, or disclose or provide information to or for a Federal Agency. This includes the time needed to review instructions; develop, acquire, install, and utilize technology and systems for the purposes of collecting, validating, and verifying information, processing and maintaining information, and disclosing and providing information; adjust the existing ways to comply with any previously applicable instructions and requirements; train personnel to be able to respond to the collection of information; search data sources; complete and review the collection of information; and, transmit or otherwise disclose the information. An agency may not conduct or sponsor, and a person is not required to respond to, a collection of information unless it displays a currently valid OMB control number. Send comments on the Agency's need for this information, the accuracy of the provided burden estimates, and any suggested methods for minimizing respondent burden, including the use of automated collection techniques to Director, Collection Strategies Division, U.S. Environmental Protection Agency (2822), 1200 Pennsylvania Ave., NW., Washington, D.C. 20460. Include the OMB control number in any correspondence. Do not send the completed forms to this address.

AS-BUILT COREHOLE MCC519

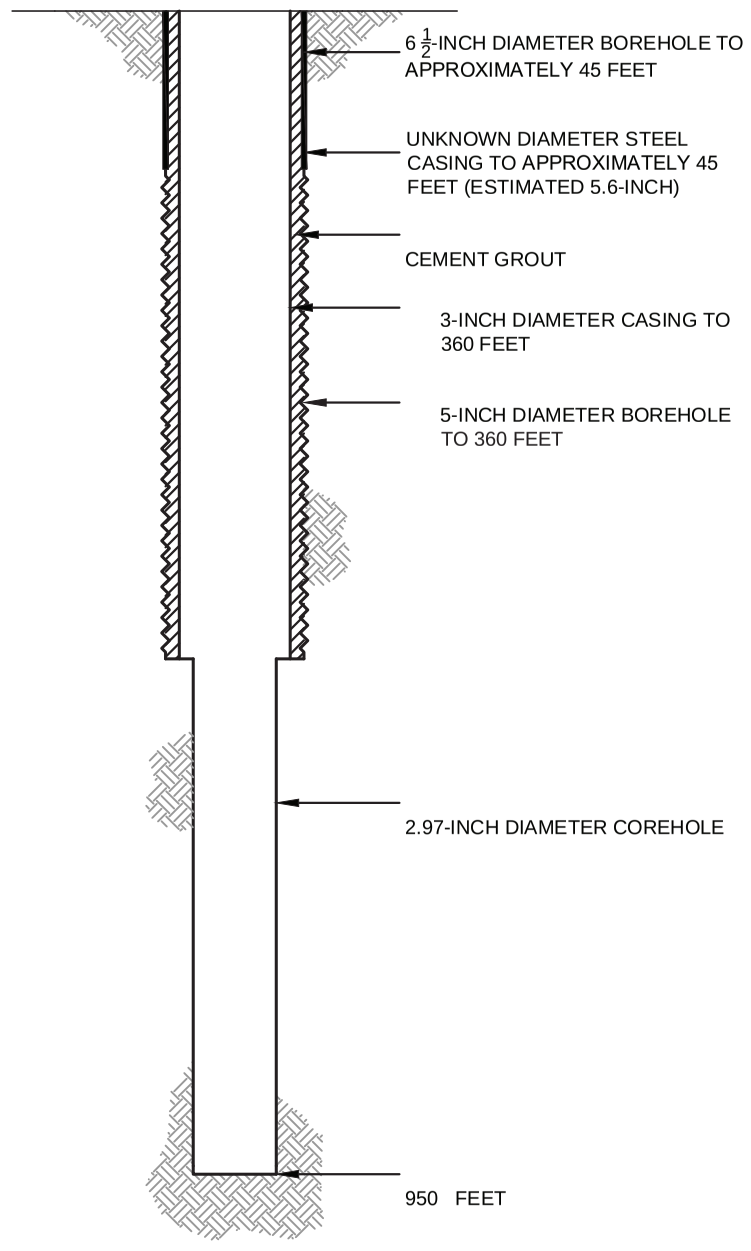

PROPOSED PLUGGING AND ABANDONMENT COREHOLE MCC519

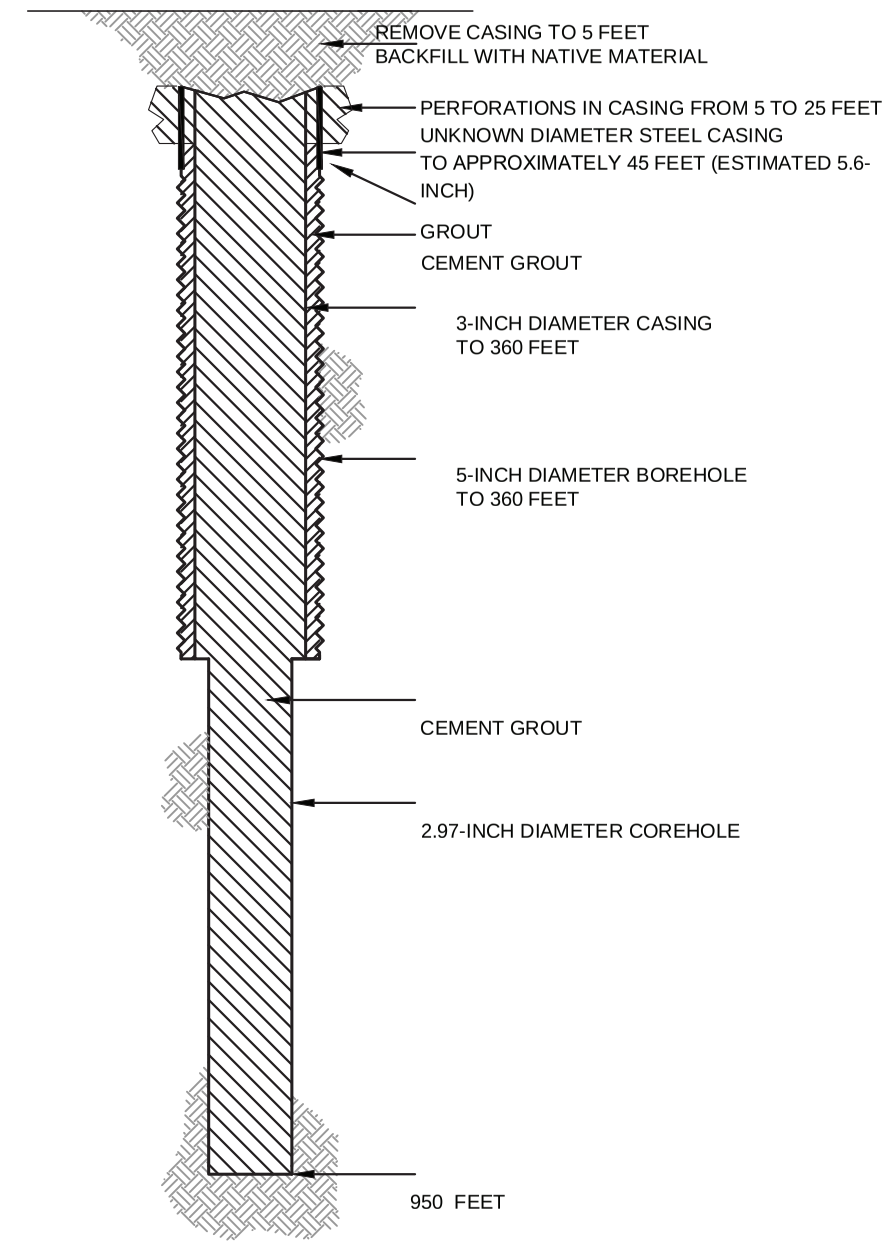

HALEY ALDRICH

FLORENCE COPPER, INC.
FLORENCE, ARIZONA

COREHOLE MCC519 DIAGRAM

FLORENCE COPPER INC.

NOT TO SCALE
SEPTEMBER 2019

FIGURE 1

MOBINI, GITA Printed: 4/21/2017 12:00 PM Layout: ABANDON (2)
\PROJECTS\CURIS RESOURCES38706-CURIS FEASIBILITY\DRAWINGS\EPA\WELL ABANDON\415S_ABANDON.DWG

OMB No. 2040-0042 Approval Expires 4/30/2022

United States Environmental Protection Agency

WELL REWORK RECORD, PLUGGING AND ABANDONMENT PLAN, OR PLUGGING AND ABANDONMENT AFFIDAVIT

Name and Address, Phone Number and/or Email of Permittee

Florence Copper Project
1575 W Hunt Hwy,
Florence, AZ 85132

Permit or EPA ID Number	API Number	Full Well Name
R9UIC-AZ3-FY11-1		MCC521

State	County
Arizona	Pinal

Locate well in two directions from nearest lines of quarter section and drilling unit

Latitude 33.05127871

Longitude -111.4364746

Surface Location

NW **1/4 of** SW **1/4 of Section** 28 **Township** 4S **Range** 9E

_____ **ft. from (N/S)** _____ **Line of quarter section**

_____ **ft. from (E/W)** _____ **Line of quarter section.**

Well Class	Timing of Action (pick one)	Type of Action (pick one)
☐ Class I ☐ Class II ☑ Class III ☐ Class V	☑ Notice Prior to Work Date Expected to Commence March 2021 ☐ Report After Work Date Work Ended	☐ Well Rework ☑ Plugging and Abandonment ☐ Conversion to a Non-Injection Well

Provide a narrative description of the work planned to be performed, or that was performed. Use additional pages as necessary. See instructions.

A workover rig capable of performing the required abandonment operations at the required depths will be moved in and set up over the core hole. The core hole will be inspected to determine the depth to which the hole remains open and if any obstructions are present in the core hole; the presence and condition of any existing collar will also be documented. If necessary, the core hole will be cleaned out to a depth of at least 100 feet below the bedrock-LBFU contact to enable placement of cement seals.

If collar is present, an attempt will be made to remove it. If removal of the collar is not feasible, it will be left in the hole and perforated as needed to allow an annular seal to be placed to a depth of at least 25 feet bgs. In areas of agricultural use, the surface casing will be cut at least 5 feet bgs and removed.

If the collar cannot be removed, it will be perforated from at least 20 feet below the bedrock-LBFU contact to at least 20 feet above the contact; from at least 20 feet below the base of the MFGU to at least 20 feet above the top of the MFGU; and from at least 25 feet bgs to 5 feet bgs.

A tremie pipe will be used to place Type V cement in the open core hole from the bottom of the core hole to the top of the core hole. Cement retainers, as described above, will be used to force cement grout into the annulus and behind perforated intervals, as necessary.

If the hole has been obstructed, as much cement as possible will be placed from 100 feet below the LBFU-bedrock contact to the top of the core hole.

The volume of Type V cement will be recorded and will not be less than the estimated volume of material required to fill each interval. All cement grout will consist of Type V cement, or equivalent approved in accordance with the UIC Permit.

Certification

I certify under the penalty of law that I have personally examined and am familiar with the information submitted in this document and all attachments and that, based on my inquiry of those individuals immediately responsible for obtaining the information, I believe that the information is true, accurate, and complete. I am aware that there are significant penalties for submitting false information, including the possibliity of fine and imprisonment. (Ref. 40 CFR § 144.32)

Name and Official Title *(Please type or print)*	Signature	Date Signed
Dan Johnson, VP - General Manager		10/3/2019

INSTRUCTIONS FOR FORM 7520-19

This form replaces forms 7520-12 and 7520-14. Use this form only when work is planned or has occurred that affects the well's construction or operation as an injection well, including work on the casing, tubing or packer (or for shallow Class V wells, the subsurface fluid emplacement network). Use one form per injection well. While reports or other information developed by contractors or service companies may be attached, this form must be signed by a responsible entity as described at 40 CFR 144.32. Note: operators closing Class V wells should use Form 7520-17.

NAME, ADDRESS, PHONE AND/OR EMAIL OF PERMITTEE: Enter the name and street address, city/town, state, and ZIP code of the permittee. Also provide an email address (if available) and/or a phone number.

PERMIT OR EPA ID NUMBER: Enter the well identification number or permit number assigned to the well by the EPA or the permitting authority.

API NUMBER: Enter the number assigned by the local jurisdiction (usually a State Oil and Gas Agency) using the American Petroleum Institute standard numbering system.

FULL WELL NAME: Enter the full name of the well or project.

Enter the **STATE** and **COUNTY** where the well is located. For States that do not have counties, use the name of that State's equivalent jurisdiction at a more local level.

WELL LOCATION: Fill in the complete township, range, and section to the nearest quarter-quarter section. A township is north or south of the baseline, and a range is east or west of the principal meridian (e.g., T12N, R34W). Also include the distance, in feet, from the nearest north or south line and nearest east or west line of the quarter-section. Also, enter the **latitude** and **longitude** of the well in decimal degrees, to five or six places if possible; be sure to include a negative sign for the longitude of a well in the Western Hemisphere and a negative sign for the latitude of a well in the Southern Hemisphere.

Enter the **WELL CLASS,** i.e., the class of injection well as defined in 40 CFR 144.6.

TIMING OF THE ACTION: Check ***Notice prior to work*** if the activity has not yet occurred (i.e., is planned). Check ***Report after work*** if the activity described has already occurred. As appropriate, include the date the activity is expected to start or the date the activity was completed. (Note this may not be available, e.g., for a plugging plan submitted with a permit application.)

TYPE OF ACTION: Check the appropriate box to describe the kind of activity being reported. Check ***Well Rework*** for work that was/will be performed on the well after it has already been in operation as an injection well. Check ***Plugging and Abandonment*** to report on plans for or descriptions of final closure/plugging after use as an injection well. Check ***Conversion to a Non-Injection Well*** if the well is to be converted to something other than an injection well.

Provide a **NARRATIVE DESCRIPTION** of the work planned to be performed, or that was performed. The narrative should include a description of the main procedures planned or that occurred during the work activity. A service company report, daily report, or similar document may be attached if it includes all the requested information and is clear and legible.

For well reworks, include the following information: The reason for the well rework; depths of activity; type of activity; changes to injection well configuration, well casing, or cement behind casing; any plug added to the well and its depth; any newly drilled interval and its depth; method(s) to demonstrate that the well has mechanical integrity (as applicable); and any deviations from the approved rework plan (as applicable).

For a well plugging plan, include the following information: Reason for the well plugging; number of plugs placed, and their depths; materials used as plugs (e.g., cast iron bridge plug, cement, cement retainer); method to set plugs; and wait-on-cement times, if any. Also provide one or more cost estimates from an independent firm in the business of plugging and abandoning wells to plug the well as described in the plan.

For well plugging affidavit, include the following information: Reason for the well plugging; number of plugs placed, and their depths; materials used as plugs (e.g., cast iron bridge plug, cement, cement retainer); method to set plugs; wait-on-cement times, if any; and any deviations from the approved plugging plan (if applicable).

For conversion to a non-injection well, include the following information: Depths of activity; type of activity; changes to injection well configuration, well casing, or cement behind casing; any plug added to the well and its depth; any newly drilled interval and its depth; depths of new perforations; and method(s) to demonstrate that the well has mechanical integrity (as applicable).

For all of the above activities, include a well sketch depicting the work, results of well tests/logging performed, service company tickets, and any other available information demonstrating how the work was/is to be performed. Also, specify whether depths are below ground surface, relative to Kelly bushing, etc.

CERTIFICATION: This form must be signed and dated by either: a responsible corporate officer for a corporation, by a general partner for a partnership, by the proprietor of a sole proprietorship, or by a principal executive or ranking elected official for a public agency.

PAPERWORK REDUCTION ACT NOTICE: The public reporting and recordkeeping burden for this collection of information is estimated to average between 6.0 and 7.9 hours per response, depending on the injection well class. Burden means the total time, effort, or financial resource expended by persons to generate, maintain, retain, or disclose or provide information to or for a Federal Agency. This includes the time needed to review instructions; develop, acquire, install, and utilize technology and systems for the purposes of collecting, validating, and verifying information, processing and maintaining information, and disclosing and providing information; adjust the existing ways to comply with any previously applicable instructions and requirements; train personnel to be able to respond to the collection of information; search data sources; complete and review the collection of information; and, transmit or otherwise disclose the information. An agency may not conduct or sponsor, and a person is not required to respond to, a collection of information unless it displays a currently valid OMB control number. Send comments on the Agency's need for this information, the accuracy of the provided burden estimates, and any suggested methods for minimizing respondent burden, including the use of automated collection techniques to Director, Collection Strategies Division, U.S. Environmental Protection Agency (2822), 1200 Pennsylvania Ave., NW., Washington, D.C. 20460. Include the OMB control number in any correspondence. Do not send the completed forms to this address.

AS-BUILT COREHOLE MCC521

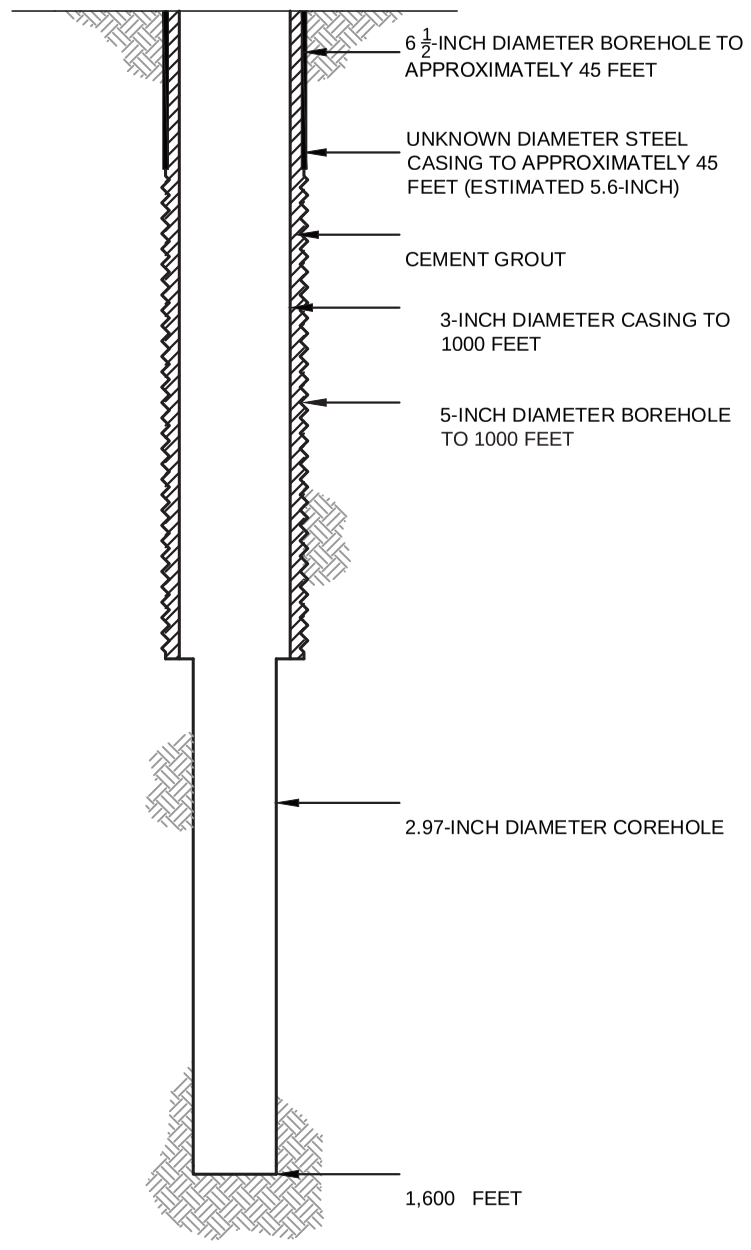

PROPOSED PLUGGING AND ABANDONMENT COREHOLE MCC521

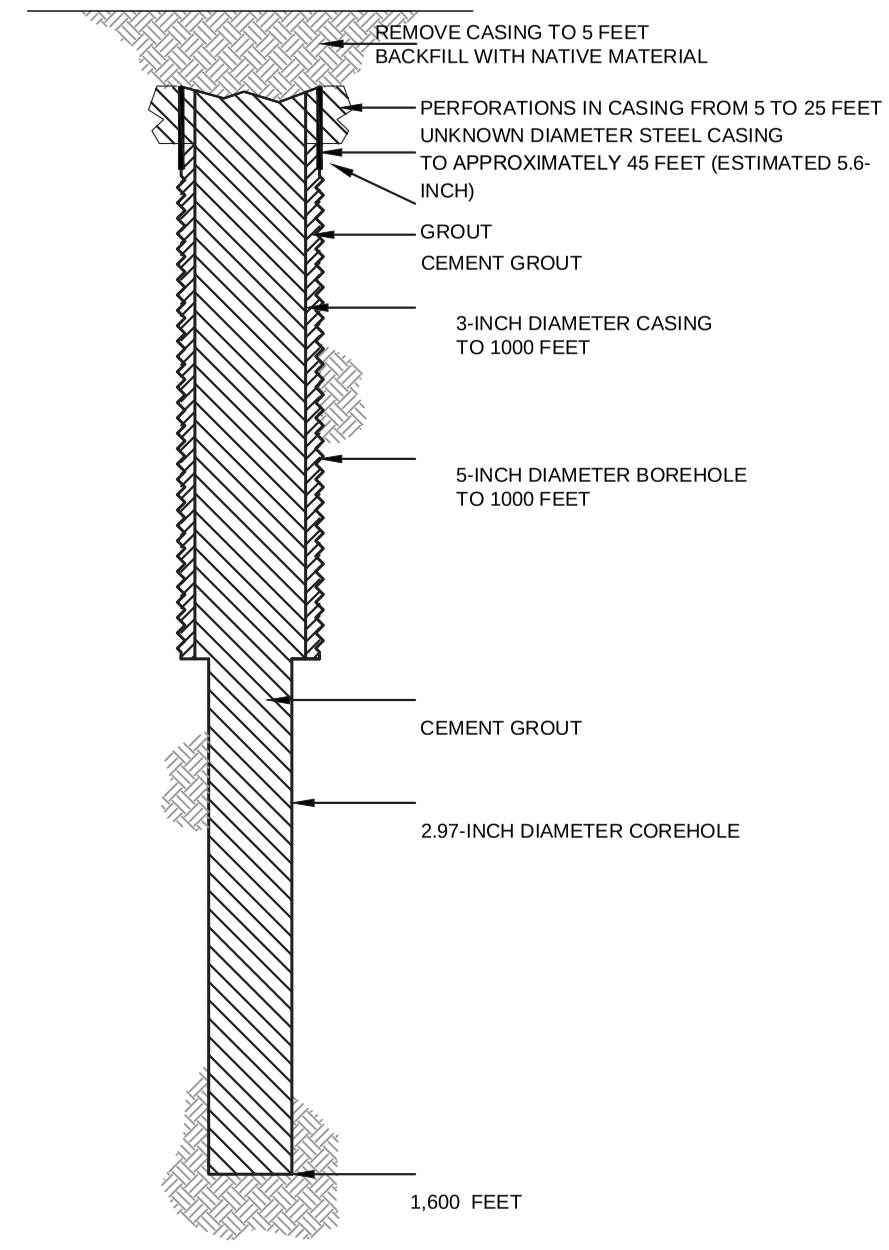

HALEY ALDRICH

FLORENCE COPPER, INC.
FLORENCE, ARIZONA

COREHOLE MCC521 DIAGRAM

FLORENCE COPPER INC.

NOT TO SCALE
SEPTEMBER 2019

FIGURE 1

MOBINI, GITA Printed: 4/21/2017 12:00 PM Layout: ABANDON (2)
\PROJECTS\CURIS RESOURCES38706-CURIS FEASIBILITY\DRAWINGS\EPA\WELL ABANDON\415S_ABANDON.DWG

OMB No. 2040-0042 Approval Expires 4/30/2022

United States Environmental Protection Agency

WELL REWORK RECORD, PLUGGING AND ABANDONMENT PLAN, OR PLUGGING AND ABANDONMENT AFFIDAVIT

Name and Address, Phone Number and/or Email of Permittee

Florence Copper Project
1575 W Hunt Hwy,
Florence, AZ 85132

Permit or EPA ID Number	API Number	Full Well Name
R9UIC-AZ3-FY11-1		MCC523

State	County
Arizona	Pinal

Locate well in two directions from nearest lines of quarter section and drilling unit

Surface Location

NE 1/4 of SW 1/4 of Section 28 Township 4S Range 9E

Latitude 33.05127275

Longitude -111.4320909

ft. from (N/S) Line of quarter section

ft. from (E/W) Line of quarter section.

Well Class	Timing of Action (pick one)	Type of Action (pick one)
☐ Class I ☐ Class II ☑ Class III ☐ Class V	☑ Notice Prior to Work Date Expected to Commence March 2021 ☐ Report After Work Date Work Ended	☐ Well Rework ☑ Plugging and Abandonment ☐ Conversion to a Non-Injection Well

Provide a narrative description of the work planned to be performed, or that was performed. Use additional pages as necessary. See instructions.

A workover rig capable of performing the required abandonment operations at the required depths will be moved in and set up over the core hole. The core hole will be inspected to determine the depth to which the hole remains open and if any obstructions are present in the core hole; the presence and condition of any existing collar will also be documented. If necessary, the core hole will be cleaned out to a depth of at least 100 feet below the bedrock-LBFU contact to enable placement of cement seals.

If collar is present, an attempt will be made to remove it. If removal of the collar is not feasible, it will be left in the hole and perforated as needed to allow an annular seal to be placed to a depth of at least 25 feet bgs. In areas of agricultural use, the surface casing will be cut at least 5 feet bgs and removed.

If the collar cannot be removed, it will be perforated from at least 20 feet below the bedrock-LBFU contact to at least 20 feet above the contact; from at least 20 feet below the base of the MFGU to at least 20 feet above the top of the MFGU; and from at least 25 feet bgs to 5 feet bgs.

A tremie pipe will be used to place Type V cement in the open core hole from the bottom of the core hole to the top of the core hole. Cement retainers, as described above, will be used to force cement grout into the annulus and behind perforated intervals, as necessary.

If the hole has been obstructed, as much cement as possible will be placed from 100 feet below the LBFU-bedrock contact to the top of the core hole.

The volume of Type V cement will be recorded and will not be less than the estimated volume of material required to fill each interval. All cement grout will consist of Type V cement, or equivalent approved in accordance with the UIC Permit.

Certification

I certify under the penalty of law that I have personally examined and am familiar with the information submitted in this document and all attachments and that, based on my inquiry of those individuals immediately responsible for obtaining the information, I believe that the information is true, accurate, and complete. I am aware that there are significant penalties for submitting false information, including the possibliity of fine and imprisonment. (Ref. 40 CFR § 144.32)

Name and Official Title *(Please type or print)*	Signature	Date Signed
Dan Johnson, VP - General Manager		10/3/2019

INSTRUCTIONS FOR FORM 7520-19

This form replaces forms 7520-12 and 7520-14. Use this form only when work is planned or has occurred that affects the well's construction or operation as an injection well, including work on the casing, tubing or packer (or for shallow Class V wells, the subsurface fluid emplacement network). Use one form per injection well. While reports or other information developed by contractors or service companies may be attached, this form must be signed by a responsible entity as described at 40 CFR 144.32. Note: operators closing Class V wells should use Form 7520-17.

NAME, ADDRESS, PHONE AND/OR EMAIL OF PERMITTEE: Enter the name and street address, city/town, state, and ZIP code of the permittee. Also provide an email address (if available) and/or a phone number.

PERMIT OR EPA ID NUMBER: Enter the well identification number or permit number assigned to the well by the EPA or the permitting authority.

API NUMBER: Enter the number assigned by the local jurisdiction (usually a State Oil and Gas Agency) using the American Petroleum Institute standard numbering system.

FULL WELL NAME: Enter the full name of the well or project.

Enter the **STATE** and **COUNTY** where the well is located. For States that do not have counties, use the name of that State's equivalent jurisdiction at a more local level.

WELL LOCATION: Fill in the complete township, range, and section to the nearest quarter-quarter section. A township is north or south of the baseline, and a range is east or west of the principal meridian (e.g., T12N, R34W). Also include the distance, in feet, from the nearest north or south line and nearest east or west line of the quarter-section. Also, enter the **latitude** and **longitude** of the well in decimal degrees, to five or six places if possible; be sure to include a negative sign for the longitude of a well in the Western Hemisphere and a negative sign for the latitude of a well in the Southern Hemisphere.

Enter the **WELL CLASS,** i.e., the class of injection well as defined in 40 CFR 144.6.

TIMING OF THE ACTION: Check ***Notice prior to work*** if the activity has not yet occurred (i.e., is planned). Check ***Report after work*** if the activity described has already occurred. As appropriate, include the date the activity is expected to start or the date the activity was completed. (Note this may not be available, e.g., for a plugging plan submitted with a permit application.)

TYPE OF ACTION: Check the appropriate box to describe the kind of activity being reported. Check ***Well Rework*** for work that was/will be performed on the well after it has already been in operation as an injection well. Check ***Plugging and Abandonment*** to report on plans for or descriptions of final closure/plugging after use as an injection well. Check ***Conversion to a Non-Injection Well*** if the well is to be converted to something other than an injection well.

Provide a **NARRATIVE DESCRIPTION** of the work planned to be performed, or that was performed. The narrative should include a description of the main procedures planned or that occurred during the work activity. A service company report, daily report, or similar document may be attached if it includes all the requested information and is clear and legible.

For well reworks, include the following information: The reason for the well rework; depths of activity; type of activity; changes to injection well configuration, well casing, or cement behind casing; any plug added to the well and its depth; any newly drilled interval and its depth; method(s) to demonstrate that the well has mechanical integrity (as applicable); and any deviations from the approved rework plan (as applicable).

For a well plugging plan, include the following information: Reason for the well plugging; number of plugs placed, and their depths; materials used as plugs (e.g., cast iron bridge plug, cement, cement retainer); method to set plugs; and wait-on-cement times, if any. Also provide one or more cost estimates from an independent firm in the business of plugging and abandoning wells to plug the well as described in the plan.

For well plugging affidavit, include the following information: Reason for the well plugging; number of plugs placed, and their depths; materials used as plugs (e.g., cast iron bridge plug, cement, cement retainer); method to set plugs; wait-on-cement times, if any; and any deviations from the approved plugging plan (if applicable).

For conversion to a non-injection well, include the following information: Depths of activity; type of activity; changes to injection well configuration, well casing, or cement behind casing; any plug added to the well and its depth; any newly drilled interval and its depth; depths of new perforations; and method(s) to demonstrate that the well has mechanical integrity (as applicable).

For all of the above activities, include a well sketch depicting the work, results of well tests/logging performed, service company tickets, and any other available information demonstrating how the work was/is to be performed. Also, specify whether depths are below ground surface, relative to Kelly bushing, etc.

CERTIFICATION: This form must be signed and dated by either: a responsible corporate officer for a corporation, by a general partner for a partnership, by the proprietor of a sole proprietorship, or by a principal executive or ranking elected official for a public agency.

PAPERWORK REDUCTION ACT NOTICE: The public reporting and recordkeeping burden for this collection of information is estimated to average between 6.0 and 7.9 hours per response, depending on the injection well class. Burden means the total time, effort, or financial resource expended by persons to generate, maintain, retain, or disclose or provide information to or for a Federal Agency. This includes the time needed to review instructions; develop, acquire, install, and utilize technology and systems for the purposes of collecting, validating, and verifying information, processing and maintaining information, and disclosing and providing information; adjust the existing ways to comply with any previously applicable instructions and requirements; train personnel to be able to respond to the collection of information; search data sources; complete and review the collection of information; and, transmit or otherwise disclose the information. An agency may not conduct or sponsor, and a person is not required to respond to, a collection of information unless it displays a currently valid OMB control number. Send comments on the Agency's need for this information, the accuracy of the provided burden estimates, and any suggested methods for minimizing respondent burden, including the use of automated collection techniques to Director, Collection Strategies Division, U.S. Environmental Protection Agency (2822), 1200 Pennsylvania Ave., NW., Washington, D.C. 20460. Include the OMB control number in any correspondence. Do not send the completed forms to this address.

AS-BUILT COREHOLE MCC523

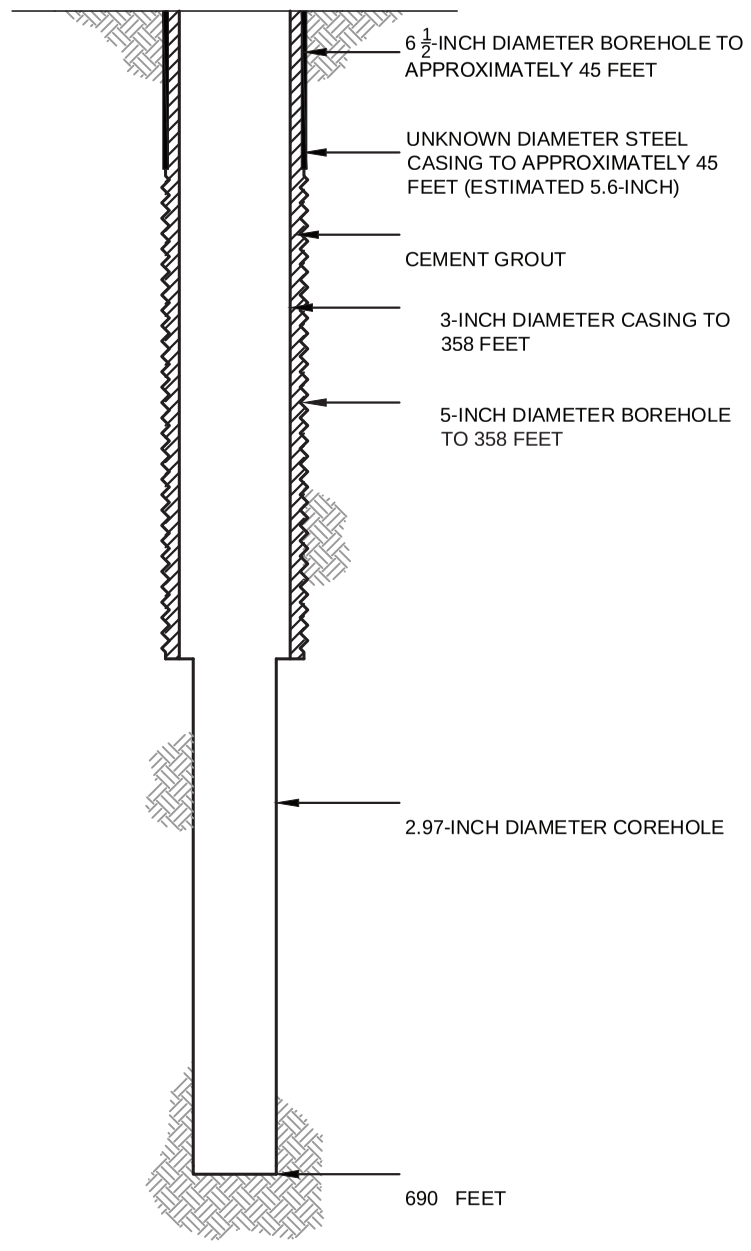

PROPOSED PLUGGING AND ABANDONMENT COREHOLE MCC523

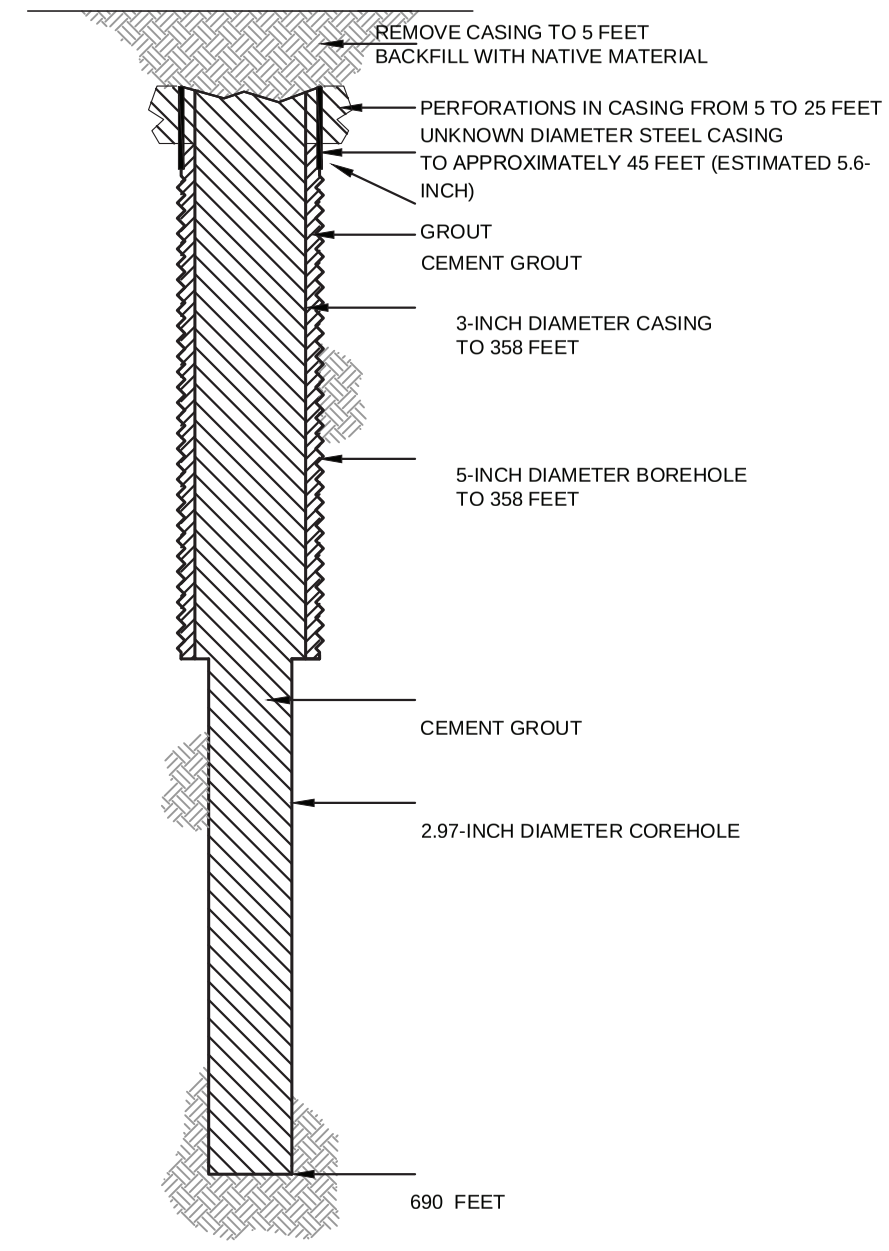

HALEY ALDRICH

FLORENCE COPPER, INC.
FLORENCE, ARIZONA

COREHOLE MCC523 DIAGRAM

FLORENCE COPPER INC.

NOT TO SCALE
SEPTEMBER 2019

FIGURE 1

MOBINI, GITA Printed: 4/21/2017 12:00 PM Layout: ABANDON (2)
\PROJECTS\CURIS RESOURCES38706-CURIS FEASIBILITY\DRAWINGS\EPA\WELL ABANDON\415S_ABANDON.DWG

OMB No. 2040-0042 Approval Expires 4/30/2022

United States Environmental Protection Agency

WELL REWORK RECORD, PLUGGING AND ABANDONMENT PLAN, OR PLUGGING AND ABANDONMENT AFFIDAVIT

Name and Address, Phone Number and/or Email of Permittee

Florence Copper Project
1575 W Hunt Hwy,
Florence, AZ 85132

Permit or EPA ID Number	API Number	Full Well Name
R9UIC-AZ3-FY11-1		MCC524

State	County
Arizona	Pinal

Locate well in two directions from nearest lines of quarter section and drilling unit

Latitude 33.04799151

Longitude -111.4303407

Surface Location

SE **1/4 of** SW **1/4 of Section** 28 **Township** 4S **Range** 9E

_____ **ft. from (N/S)** _____ **Line of quarter section**

_____ **ft. from (E/W)** _____ **Line of quarter section.**

Well Class	Timing of Action (pick one)	Type of Action (pick one)
☐ Class I ☐ Class II ☑ Class III ☐ Class V	☑ Notice Prior to Work Date Expected to Commence March 2021 ☐ Report After Work Date Work Ended	☐ Well Rework ☑ Plugging and Abandonment ☐ Conversion to a Non-Injection Well

Provide a narrative description of the work planned to be performed, or that was performed. Use additional pages as necessary. See instructions.

A workover rig capable of performing the required abandonment operations at the required depths will be moved in and set up over the core hole. The core hole will be inspected to determine the depth to which the hole remains open and if any obstructions are present in the core hole; the presence and condition of any existing collar will also be documented. If necessary, the core hole will be cleaned out to a depth of at least 100 feet below the bedrock-LBFU contact to enable placement of cement seals.

If collar is present, an attempt will be made to remove it. If removal of the collar is not feasible, it will be left in the hole and perforated as needed to allow an annular seal to be placed to a depth of at least 25 feet bgs. In areas of agricultural use, the surface casing will be cut at least 5 feet bgs and removed.

If the collar cannot be removed, it will be perforated from at least 20 feet below the bedrock-LBFU contact to at least 20 feet above the contact; from at least 20 feet below the base of the MFGU to at least 20 feet above the top of the MFGU; and from at least 25 feet bgs to 5 feet bgs.

A tremie pipe will be used to place Type V cement in the open core hole from the bottom of the core hole to the top of the core hole. Cement retainers, as described above, will be used to force cement grout into the annulus and behind perforated intervals, as necessary.

If the hole has been obstructed, as much cement as possible will be placed from 100 feet below the LBFU-bedrock contact to the top of the core hole.

The volume of Type V cement will be recorded and will not be less than the estimated volume of material required to fill each interval. All cement grout will consist of Type V cement, or equivalent approved in accordance with the UIC Permit.

Certification

I certify under the penalty of law that I have personally examined and am familiar with the information submitted in this document and all attachments and that, based on my inquiry of those individuals immediately responsible for obtaining the information, I believe that the information is true, accurate, and complete. I am aware that there are significant penalties for submitting false information, including the possibliity of fine and imprisonment. (Ref. 40 CFR § 144.32)

Name and Official Title *(Please type or print)*	Signature	Date Signed
Dan Johnson, VP - General Manager		10/3/2019

INSTRUCTIONS FOR FORM 7520-19

This form replaces forms 7520-12 and 7520-14. Use this form only when work is planned or has occurred that affects the well's construction or operation as an injection well, including work on the casing, tubing or packer (or for shallow Class V wells, the subsurface fluid emplacement network). Use one form per injection well. While reports or other information developed by contractors or service companies may be attached, this form must be signed by a responsible entity as described at 40 CFR 144.32. Note: operators closing Class V wells should use Form 7520-17.

NAME, ADDRESS, PHONE AND/OR EMAIL OF PERMITTEE: Enter the name and street address, city/town, state, and ZIP code of the permittee. Also provide an email address (if available) and/or a phone number.

PERMIT OR EPA ID NUMBER: Enter the well identification number or permit number assigned to the well by the EPA or the permitting authority.

API NUMBER: Enter the number assigned by the local jurisdiction (usually a State Oil and Gas Agency) using the American Petroleum Institute standard numbering system.

FULL WELL NAME: Enter the full name of the well or project.

Enter the **STATE** and **COUNTY** where the well is located. For States that do not have counties, use the name of that State's equivalent jurisdiction at a more local level.

WELL LOCATION: Fill in the complete township, range, and section to the nearest quarter-quarter section. A township is north or south of the baseline, and a range is east or west of the principal meridian (e.g., T12N, R34W). Also include the distance, in feet, from the nearest north or south line and nearest east or west line of the quarter-section. Also, enter the **latitude** and **longitude** of the well in decimal degrees, to five or six places if possible; be sure to include a negative sign for the longitude of a well in the Western Hemisphere and a negative sign for the latitude of a well in the Southern Hemisphere.

Enter the **WELL CLASS,** i.e., the class of injection well as defined in 40 CFR 144.6.

TIMING OF THE ACTION: Check ***Notice prior to work*** if the activity has not yet occurred (i.e., is planned). Check ***Report after work*** if the activity described has already occurred. As appropriate, include the date the activity is expected to start or the date the activity was completed. (Note this may not be available, e.g., for a plugging plan submitted with a permit application.)

TYPE OF ACTION: Check the appropriate box to describe the kind of activity being reported. Check ***Well Rework*** for work that was/will be performed on the well after it has already been in operation as an injection well. Check ***Plugging and Abandonment*** to report on plans for or descriptions of final closure/plugging after use as an injection well. Check ***Conversion to a Non-Injection Well*** if the well is to be converted to something other than an injection well.

Provide a **NARRATIVE DESCRIPTION** of the work planned to be performed, or that was performed. The narrative should include a description of the main procedures planned or that occurred during the work activity. A service company report, daily report, or similar document may be attached if it includes all the requested information and is clear and legible.

For well reworks, include the following information: The reason for the well rework; depths of activity; type of activity; changes to injection well configuration, well casing, or cement behind casing; any plug added to the well and its depth; any newly drilled interval and its depth; method(s) to demonstrate that the well has mechanical integrity (as applicable); and any deviations from the approved rework plan (as applicable).

For a well plugging plan, include the following information: Reason for the well plugging; number of plugs placed, and their depths; materials used as plugs (e.g., cast iron bridge plug, cement, cement retainer); method to set plugs; and wait-on-cement times, if any. Also provide one or more cost estimates from an independent firm in the business of plugging and abandoning wells to plug the well as described in the plan.

For well plugging affidavit, include the following information: Reason for the well plugging; number of plugs placed, and their depths; materials used as plugs (e.g., cast iron bridge plug, cement, cement retainer); method to set plugs; wait-on-cement times, if any; and any deviations from the approved plugging plan (if applicable).

For conversion to a non-injection well, include the following information: Depths of activity; type of activity; changes to injection well configuration, well casing, or cement behind casing; any plug added to the well and its depth; any newly drilled interval and its depth; depths of new perforations; and method(s) to demonstrate that the well has mechanical integrity (as applicable).

For all of the above activities, include a well sketch depicting the work, results of well tests/logging performed, service company tickets, and any other available information demonstrating how the work was/is to be performed. Also, specify whether depths are below ground surface, relative to Kelly bushing, etc.

CERTIFICATION: This form must be signed and dated by either: a responsible corporate officer for a corporation, by a general partner for a partnership, by the proprietor of a sole proprietorship, or by a principal executive or ranking elected official for a public agency.

PAPERWORK REDUCTION ACT NOTICE: The public reporting and recordkeeping burden for this collection of information is estimated to average between 6.0 and 7.9 hours per response, depending on the injection well class. Burden means the total time, effort, or financial resource expended by persons to generate, maintain, retain, or disclose or provide information to or for a Federal Agency. This includes the time needed to review instructions; develop, acquire, install, and utilize technology and systems for the purposes of collecting, validating, and verifying information, processing and maintaining information, and disclosing and providing information; adjust the existing ways to comply with any previously applicable instructions and requirements; train personnel to be able to respond to the collection of information; search data sources; complete and review the collection of information; and, transmit or otherwise disclose the information. An agency may not conduct or sponsor, and a person is not required to respond to, a collection of information unless it displays a currently valid OMB control number. Send comments on the Agency's need for this information, the accuracy of the provided burden estimates, and any suggested methods for minimizing respondent burden, including the use of automated collection techniques to Director, Collection Strategies Division, U.S. Environmental Protection Agency (2822), 1200 Pennsylvania Ave., NW., Washington, D.C. 20460. Include the OMB control number in any correspondence. Do not send the completed forms to this address.

AS-BUILT COREHOLE MCC524

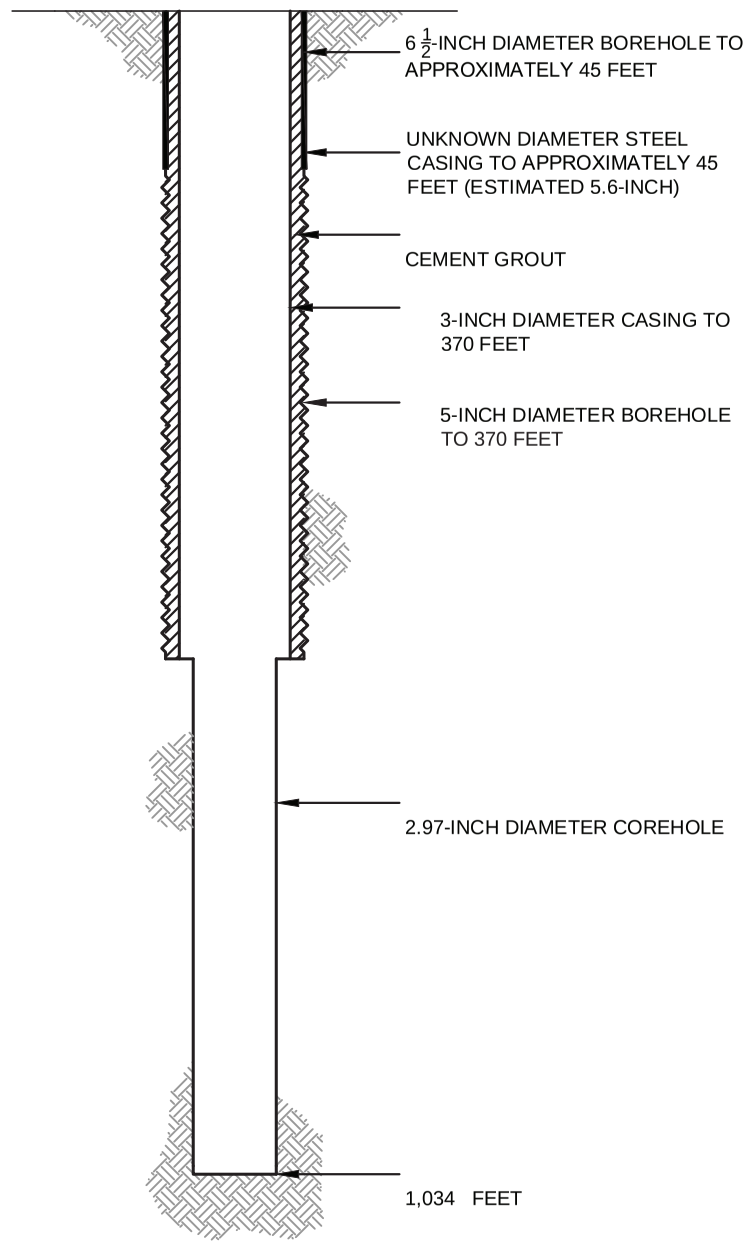

PROPOSED PLUGGING AND ABANDONMENT COREHOLE MCC524

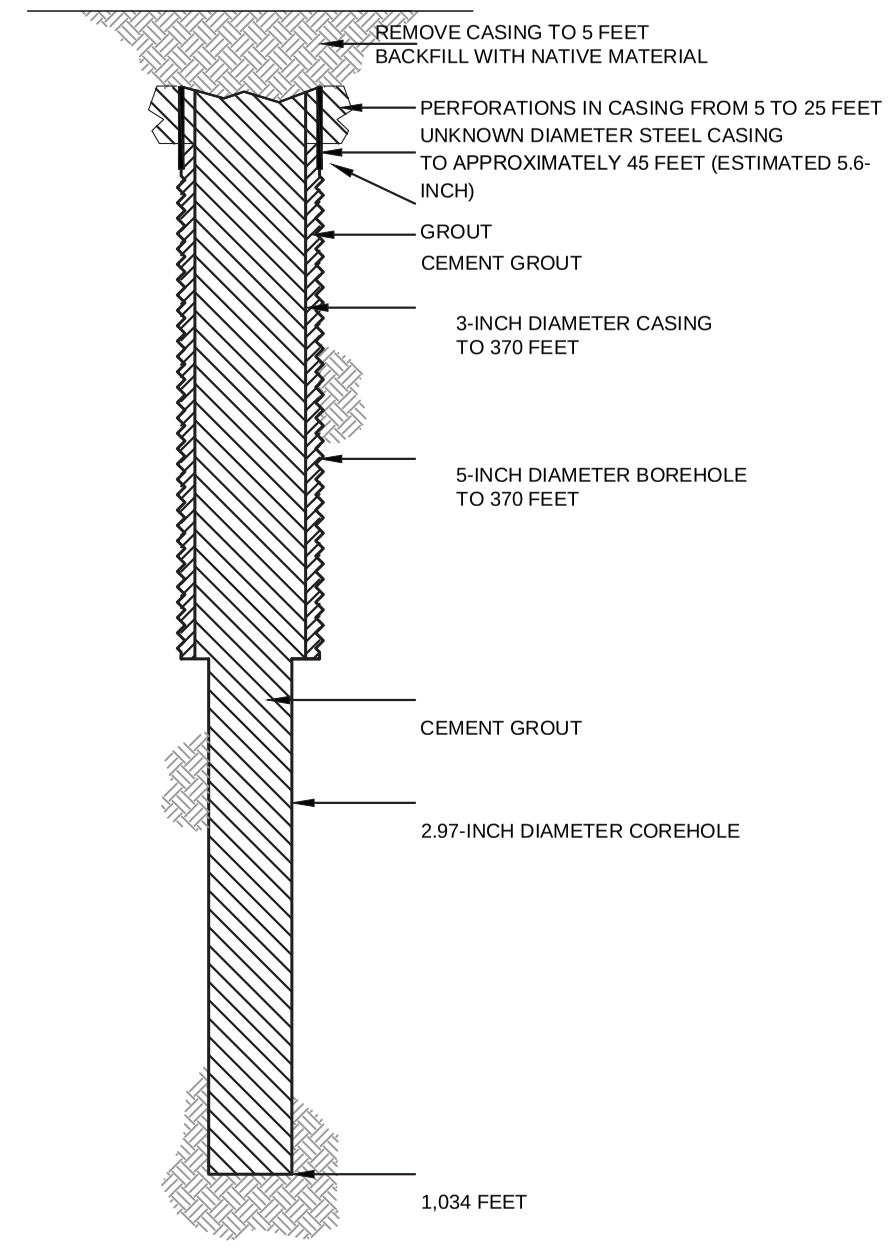

HALEY ALDRICH

FLORENCE COPPER, INC.
FLORENCE, ARIZONA

COREHOLE MCC524 DIAGRAM

FLORENCE COPPER INC.

NOT TO SCALE
SEPTEMBER 2019

FIGURE 1

MOBINI, GITA Printed: 4/21/2017 12:00 PM Layout: ABANDON (2)
\PROJECTS\CURIS RESOURCES38706-CURIS FEASIBILITY\DRAWINGS\EPA\WELL ABANDON\415S_ABANDON.DWG

OMB No. 2040-0042 Approval Expires 4/30/2022

United States Environmental Protection Agency

WELL REWORK RECORD, PLUGGING AND ABANDONMENT PLAN, OR PLUGGING AND ABANDONMENT AFFIDAVIT

Name and Address, Phone Number and/or Email of Permittee

Florence Copper Project
1575 W Hunt Hwy,
Florence, AZ 85132

Permit or EPA ID Number	API Number	Full Well Name
R9UIC-AZ3-FY11-1		MCC525

State	County
Arizona	Pinal

Locate well in two directions from nearest lines of quarter section and drilling unit

Latitude 33.05035796

Longitude -111.4338491

Surface Location

NE **1/4 of** SW **1/4 of Section** 28 **Township** 4S **Range** 9E

_____ **ft. from (N/S)** _____ **Line of quarter section**

_____ **ft. from (E/W)** _____ **Line of quarter section.**

Well Class	Timing of Action (pick one)	Type of Action (pick one)
☐ Class I ☐ Class II ☑ Class III ☐ Class V	☑ Notice Prior to Work Date Expected to Commence March 2021 ☐ Report After Work Date Work Ended	☐ Well Rework ☑ Plugging and Abandonment ☐ Conversion to a Non-Injection Well

Provide a narrative description of the work planned to be performed, or that was performed. Use additional pages as necessary. See instructions.

A workover rig capable of performing the required abandonment operations at the required depths will be moved in and set up over the core hole. The core hole will be inspected to determine the depth to which the hole remains open and if any obstructions are present in the core hole; the presence and condition of any existing collar will also be documented. If necessary, the core hole will be cleaned out to a depth of at least 100 feet below the bedrock-LBFU contact to enable placement of cement seals.

If collar is present, an attempt will be made to remove it. If removal of the collar is not feasible, it will be left in the hole and perforated as needed to allow an annular seal to be placed to a depth of at least 25 feet bgs. In areas of agricultural use, the surface casing will be cut at least 5 feet bgs and removed.

If the collar cannot be removed, it will be perforated from at least 20 feet below the bedrock-LBFU contact to at least 20 feet above the contact; from at least 20 feet below the base of the MFGU to at least 20 feet above the top of the MFGU; and from at least 25 feet bgs to 5 feet bgs.

A tremie pipe will be used to place Type V cement in the open core hole from the bottom of the core hole to the top of the core hole. Cement retainers, as described above, will be used to force cement grout into the annulus and behind perforated intervals, as necessary.

If the hole has been obstructed, as much cement as possible will be placed from 100 feet below the LBFU-bedrock contact to the top of the core hole.

The volume of Type V cement will be recorded and will not be less than the estimated volume of material required to fill each interval. All cement grout will consist of Type V cement, or equivalent approved in accordance with the UIC Permit.

Certification

I certify under the penalty of law that I have personally examined and am familiar with the information submitted in this document and all attachments and that, based on my inquiry of those individuals immediately responsible for obtaining the information, I believe that the information is true, accurate, and complete. I am aware that there are significant penalties for submitting false information, including the possibliity of fine and imprisonment. (Ref. 40 CFR § 144.32)

Name and Official Title *(Please type or print)*	Signature	Date Signed
Dan Johnson, VP - General Manager		10/3/2019

INSTRUCTIONS FOR FORM 7520-19

This form replaces forms 7520-12 and 7520-14. Use this form only when work is planned or has occurred that affects the well's construction or operation as an injection well, including work on the casing, tubing or packer (or for shallow Class V wells, the subsurface fluid emplacement network). Use one form per injection well. While reports or other information developed by contractors or service companies may be attached, this form must be signed by a responsible entity as described at 40 CFR 144.32. Note: operators closing Class V wells should use Form 7520-17.

NAME, ADDRESS, PHONE AND/OR EMAIL OF PERMITTEE: Enter the name and street address, city/town, state, and ZIP code of the permittee. Also provide an email address (if available) and/or a phone number.

PERMIT OR EPA ID NUMBER: Enter the well identification number or permit number assigned to the well by the EPA or the permitting authority.

API NUMBER: Enter the number assigned by the local jurisdiction (usually a State Oil and Gas Agency) using the American Petroleum Institute standard numbering system.

FULL WELL NAME: Enter the full name of the well or project.

Enter the **STATE** and **COUNTY** where the well is located. For States that do not have counties, use the name of that State's equivalent jurisdiction at a more local level.

WELL LOCATION: Fill in the complete township, range, and section to the nearest quarter-quarter section. A township is north or south of the baseline, and a range is east or west of the principal meridian (e.g., T12N, R34W). Also include the distance, in feet, from the nearest north or south line and nearest east or west line of the quarter-section. Also, enter the **latitude** and **longitude** of the well in decimal degrees, to five or six places if possible; be sure to include a negative sign for the longitude of a well in the Western Hemisphere and a negative sign for the latitude of a well in the Southern Hemisphere.

Enter the **WELL CLASS,** i.e., the class of injection well as defined in 40 CFR 144.6.

TIMING OF THE ACTION: Check ***Notice prior to work*** if the activity has not yet occurred (i.e., is planned). Check ***Report after work*** if the activity described has already occurred. As appropriate, include the date the activity is expected to start or the date the activity was completed. (Note this may not be available, e.g., for a plugging plan submitted with a permit application.)

TYPE OF ACTION: Check the appropriate box to describe the kind of activity being reported. Check ***Well Rework*** for work that was/will be performed on the well after it has already been in operation as an injection well. Check ***Plugging and Abandonment*** to report on plans for or descriptions of final closure/plugging after use as an injection well. Check ***Conversion to a Non-Injection Well*** if the well is to be converted to something other than an injection well.

Provide a **NARRATIVE DESCRIPTION** of the work planned to be performed, or that was performed. The narrative should include a description of the main procedures planned or that occurred during the work activity. A service company report, daily report, or similar document may be attached if it includes all the requested information and is clear and legible.

For well reworks, include the following information: The reason for the well rework; depths of activity; type of activity; changes to injection well configuration, well casing, or cement behind casing; any plug added to the well and its depth; any newly drilled interval and its depth; method(s) to demonstrate that the well has mechanical integrity (as applicable); and any deviations from the approved rework plan (as applicable).

For a well plugging plan, include the following information: Reason for the well plugging; number of plugs placed, and their depths; materials used as plugs (e.g., cast iron bridge plug, cement, cement retainer); method to set plugs; and wait-on-cement times, if any. Also provide one or more cost estimates from an independent firm in the business of plugging and abandoning wells to plug the well as described in the plan.

For well plugging affidavit, include the following information: Reason for the well plugging; number of plugs placed, and their depths; materials used as plugs (e.g., cast iron bridge plug, cement, cement retainer); method to set plugs; wait-on-cement times, if any; and any deviations from the approved plugging plan (if applicable).

For conversion to a non-injection well, include the following information: Depths of activity; type of activity; changes to injection well configuration, well casing, or cement behind casing; any plug added to the well and its depth; any newly drilled interval and its depth; depths of new perforations; and method(s) to demonstrate that the well has mechanical integrity (as applicable).

For all of the above activities, include a well sketch depicting the work, results of well tests/logging performed, service company tickets, and any other available information demonstrating how the work was/is to be performed. Also, specify whether depths are below ground surface, relative to Kelly bushing, etc.

CERTIFICATION: This form must be signed and dated by either: a responsible corporate officer for a corporation, by a general partner for a partnership, by the proprietor of a sole proprietorship, or by a principal executive or ranking elected official for a public agency.

PAPERWORK REDUCTION ACT NOTICE: The public reporting and recordkeeping burden for this collection of information is estimated to average between 6.0 and 7.9 hours per response, depending on the injection well class. Burden means the total time, effort, or financial resource expended by persons to generate, maintain, retain, or disclose or provide information to or for a Federal Agency. This includes the time needed to review instructions; develop, acquire, install, and utilize technology and systems for the purposes of collecting, validating, and verifying information, processing and maintaining information, and disclosing and providing information; adjust the existing ways to comply with any previously applicable instructions and requirements; train personnel to be able to respond to the collection of information; search data sources; complete and review the collection of information; and, transmit or otherwise disclose the information. An agency may not conduct or sponsor, and a person is not required to respond to, a collection of information unless it displays a currently valid OMB control number. Send comments on the Agency's need for this information, the accuracy of the provided burden estimates, and any suggested methods for minimizing respondent burden, including the use of automated collection techniques to Director, Collection Strategies Division, U.S. Environmental Protection Agency (2822), 1200 Pennsylvania Ave., NW., Washington, D.C. 20460. Include the OMB control number in any correspondence. Do not send the completed forms to this address.

AS-BUILT COREHOLE MCC525

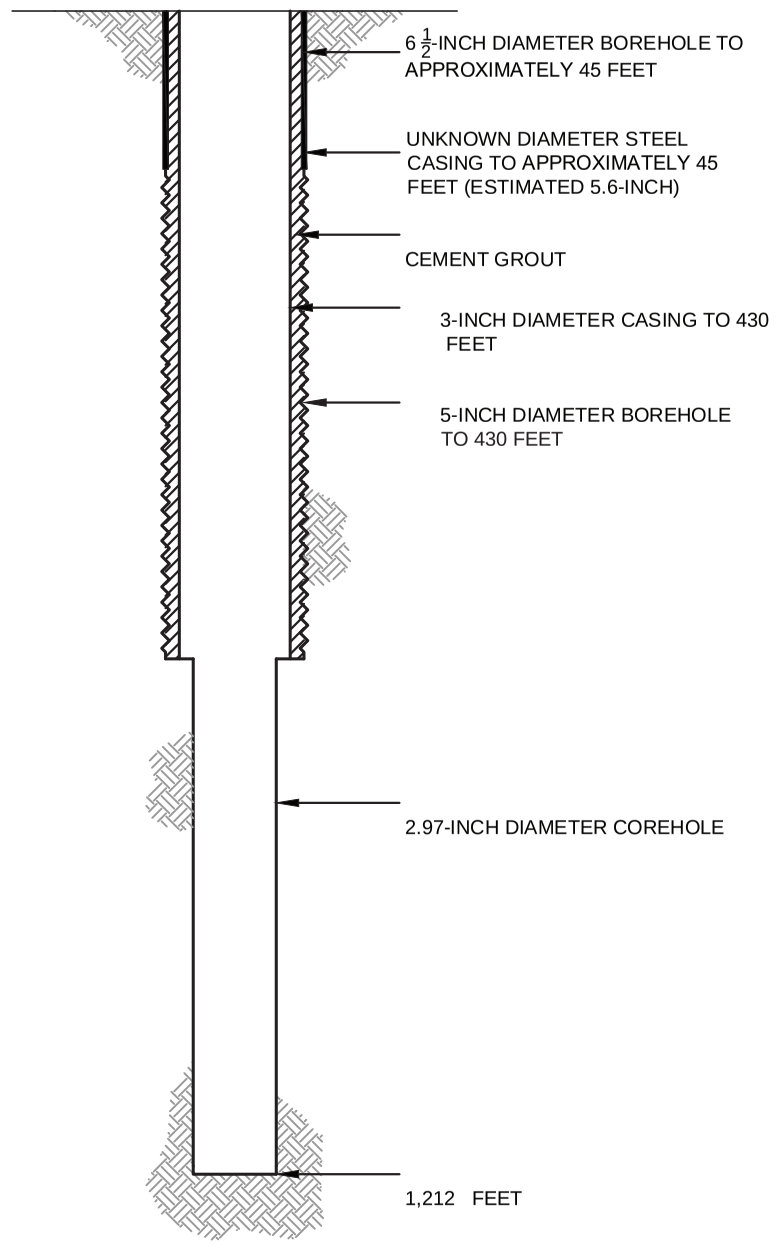

PROPOSED PLUGGING AND ABANDONMENT COREHOLE MCC525

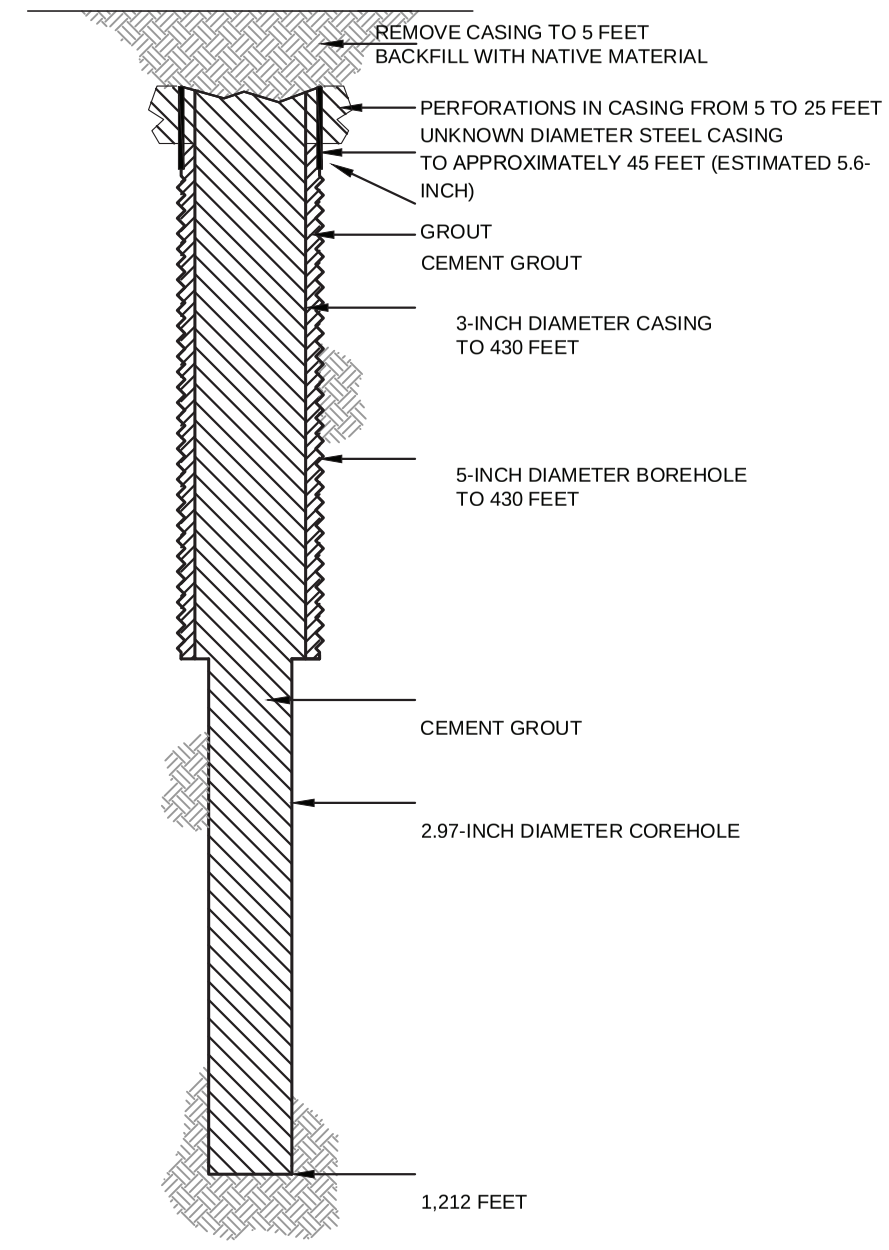

HALEY ALDRICH

FLORENCE COPPER, INC.
FLORENCE, ARIZONA

COREHOLE MCC525 DIAGRAM

FLORENCE COPPER INC.

NOT TO SCALE
SEPTEMBER 2019

FIGURE 1

MOBINI, GITA Printed: 4/21/2017 12:00 PM Layout: ABANDON (2)
\PROJECTS\CURIS RESOURCES38706-CURIS FEASIBILITY\DRAWINGS\EPA\WELL ABANDON\415S_ABANDON.DWG

OMB No. 2040-0042 Approval Expires 4/30/2022

United States Environmental Protection Agency

WELL REWORK RECORD, PLUGGING AND ABANDONMENT PLAN, OR PLUGGING AND ABANDONMENT AFFIDAVIT

Name and Address, Phone Number and/or Email of Permittee

Florence Copper Project
1575 W Hunt Hwy,
Florence, AZ 85132

Permit or EPA ID Number	API Number	Full Well Name
R9UIC-AZ3-FY11-1		MCC526

State	County
Arizona	Pinal

Locate well in two directions from nearest lines of quarter section and drilling unit

Latitude 33.05127956

Longitude -111.4296771

Surface Location

NW **1/4 of** SE **1/4 of Section** 28 **Township** 4S **Range** 9E

_____ **ft. from (N/S)** _____ **Line of quarter section**

_____ **ft. from (E/W)** _____ **Line of quarter section.**

Well Class	Timing of Action (pick one)	Type of Action (pick one)
☐ Class I ☐ Class II ☑ Class III ☐ Class V	☑ Notice Prior to Work Date Expected to Commence March 2021 ☐ Report After Work Date Work Ended	☐ Well Rework ☑ Plugging and Abandonment ☐ Conversion to a Non-Injection Well

Provide a narrative description of the work planned to be performed, or that was performed. Use additional pages as necessary. See instructions.

A workover rig capable of performing the required abandonment operations at the required depths will be moved in and set up over the core hole. The core hole will be inspected to determine the depth to which the hole remains open and if any obstructions are present in the core hole; the presence and condition of any existing collar will also be documented. If necessary, the core hole will be cleaned out to a depth of at least 100 feet below the bedrock-LBFU contact to enable placement of cement seals.

If collar is present, an attempt will be made to remove it. If removal of the collar is not feasible, it will be left in the hole and perforated as needed to allow an annular seal to be placed to a depth of at least 25 feet bgs. In areas of agricultural use, the surface casing will be cut at least 5 feet bgs and removed.

If the collar cannot be removed, it will be perforated from at least 20 feet below the bedrock-LBFU contact to at least 20 feet above the contact; from at least 20 feet below the base of the MFGU to at least 20 feet above the top of the MFGU; and from at least 25 feet bgs to 5 feet bgs.

A tremie pipe will be used to place Type V cement in the open core hole from the bottom of the core hole to the top of the core hole. Cement retainers, as described above, will be used to force cement grout into the annulus and behind perforated intervals, as necessary.

If the hole has been obstructed, as much cement as possible will be placed from 100 feet below the LBFU-bedrock contact to the top of the core hole.

The volume of Type V cement will be recorded and will not be less than the estimated volume of material required to fill each interval. All cement grout will consist of Type V cement, or equivalent approved in accordance with the UIC Permit.

Certification

I certify under the penalty of law that I have personally examined and am familiar with the information submitted in this document and all attachments and that, based on my inquiry of those individuals immediately responsible for obtaining the information, I believe that the information is true, accurate, and complete. I am aware that there are significant penalties for submitting false information, including the possibliity of fine and imprisonment. (Ref. 40 CFR § 144.32)

Name and Official Title *(Please type or print)*	Signature	Date Signed
Dan Johnson, VP - General Manager		10/3/2019

INSTRUCTIONS FOR FORM 7520-19

This form replaces forms 7520-12 and 7520-14. Use this form only when work is planned or has occurred that affects the well's construction or operation as an injection well, including work on the casing, tubing or packer (or for shallow Class V wells, the subsurface fluid emplacement network). Use one form per injection well. While reports or other information developed by contractors or service companies may be attached, this form must be signed by a responsible entity as described at 40 CFR 144.32. Note: operators closing Class V wells should use Form 7520-17.

NAME, ADDRESS, PHONE AND/OR EMAIL OF PERMITTEE: Enter the name and street address, city/town, state, and ZIP code of the permittee. Also provide an email address (if available) and/or a phone number.

PERMIT OR EPA ID NUMBER: Enter the well identification number or permit number assigned to the well by the EPA or the permitting authority.

API NUMBER: Enter the number assigned by the local jurisdiction (usually a State Oil and Gas Agency) using the American Petroleum Institute standard numbering system.

FULL WELL NAME: Enter the full name of the well or project.

Enter the **STATE** and **COUNTY** where the well is located. For States that do not have counties, use the name of that State's equivalent jurisdiction at a more local level.

WELL LOCATION: Fill in the complete township, range, and section to the nearest quarter-quarter section. A township is north or south of the baseline, and a range is east or west of the principal meridian (e.g., T12N, R34W). Also include the distance, in feet, from the nearest north or south line and nearest east or west line of the quarter-section. Also, enter the **latitude** and **longitude** of the well in decimal degrees, to five or six places if possible; be sure to include a negative sign for the longitude of a well in the Western Hemisphere and a negative sign for the latitude of a well in the Southern Hemisphere.

Enter the **WELL CLASS,** i.e., the class of injection well as defined in 40 CFR 144.6.

TIMING OF THE ACTION: Check ***Notice prior to work*** if the activity has not yet occurred (i.e., is planned). Check ***Report after work*** if the activity described has already occurred. As appropriate, include the date the activity is expected to start or the date the activity was completed. (Note this may not be available, e.g., for a plugging plan submitted with a permit application.)

TYPE OF ACTION: Check the appropriate box to describe the kind of activity being reported. Check ***Well Rework*** for work that was/will be performed on the well after it has already been in operation as an injection well. Check ***Plugging and Abandonment*** to report on plans for or descriptions of final closure/plugging after use as an injection well. Check ***Conversion to a Non-Injection Well*** if the well is to be converted to something other than an injection well.

Provide a **NARRATIVE DESCRIPTION** of the work planned to be performed, or that was performed. The narrative should include a description of the main procedures planned or that occurred during the work activity. A service company report, daily report, or similar document may be attached if it includes all the requested information and is clear and legible.

For well reworks, include the following information: The reason for the well rework; depths of activity; type of activity; changes to injection well configuration, well casing, or cement behind casing; any plug added to the well and its depth; any newly drilled interval and its depth; method(s) to demonstrate that the well has mechanical integrity (as applicable); and any deviations from the approved rework plan (as applicable).

For a well plugging plan, include the following information: Reason for the well plugging; number of plugs placed, and their depths; materials used as plugs (e.g., cast iron bridge plug, cement, cement retainer); method to set plugs; and wait-on-cement times, if any. Also provide one or more cost estimates from an independent firm in the business of plugging and abandoning wells to plug the well as described in the plan.

For well plugging affidavit, include the following information: Reason for the well plugging; number of plugs placed, and their depths; materials used as plugs (e.g., cast iron bridge plug, cement, cement retainer); method to set plugs; wait-on-cement times, if any; and any deviations from the approved plugging plan (if applicable).

For conversion to a non-injection well, include the following information: Depths of activity; type of activity; changes to injection well configuration, well casing, or cement behind casing; any plug added to the well and its depth; any newly drilled interval and its depth; depths of new perforations; and method(s) to demonstrate that the well has mechanical integrity (as applicable).

For all of the above activities, include a well sketch depicting the work, results of well tests/logging performed, service company tickets, and any other available information demonstrating how the work was/is to be performed. Also, specify whether depths are below ground surface, relative to Kelly bushing, etc.

CERTIFICATION: This form must be signed and dated by either: a responsible corporate officer for a corporation, by a general partner for a partnership, by the proprietor of a sole proprietorship, or by a principal executive or ranking elected official for a public agency.

PAPERWORK REDUCTION ACT NOTICE: The public reporting and recordkeeping burden for this collection of information is estimated to average between 6.0 and 7.9 hours per response, depending on the injection well class. Burden means the total time, effort, or financial resource expended by persons to generate, maintain, retain, or disclose or provide information to or for a Federal Agency. This includes the time needed to review instructions; develop, acquire, install, and utilize technology and systems for the purposes of collecting, validating, and verifying information, processing and maintaining information, and disclosing and providing information; adjust the existing ways to comply with any previously applicable instructions and requirements; train personnel to be able to respond to the collection of information; search data sources; complete and review the collection of information; and, transmit or otherwise disclose the information. An agency may not conduct or sponsor, and a person is not required to respond to, a collection of information unless it displays a currently valid OMB control number. Send comments on the Agency's need for this information, the accuracy of the provided burden estimates, and any suggested methods for minimizing respondent burden, including the use of automated collection techniques to Director, Collection Strategies Division, U.S. Environmental Protection Agency (2822), 1200 Pennsylvania Ave., NW., Washington, D.C. 20460. Include the OMB control number in any correspondence. Do not send the completed forms to this address.

AS-BUILT COREHOLE MCC526

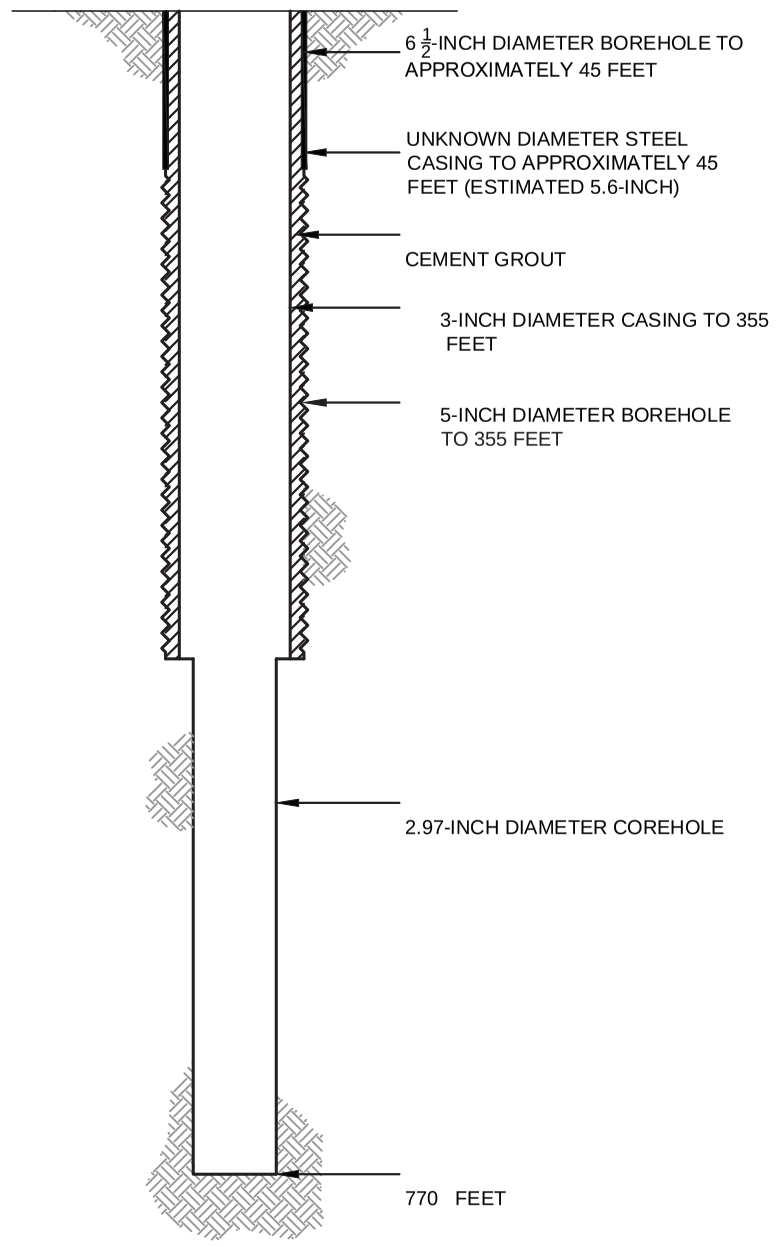

PROPOSED PLUGGING AND ABANDONMENT COREHOLE MCC526

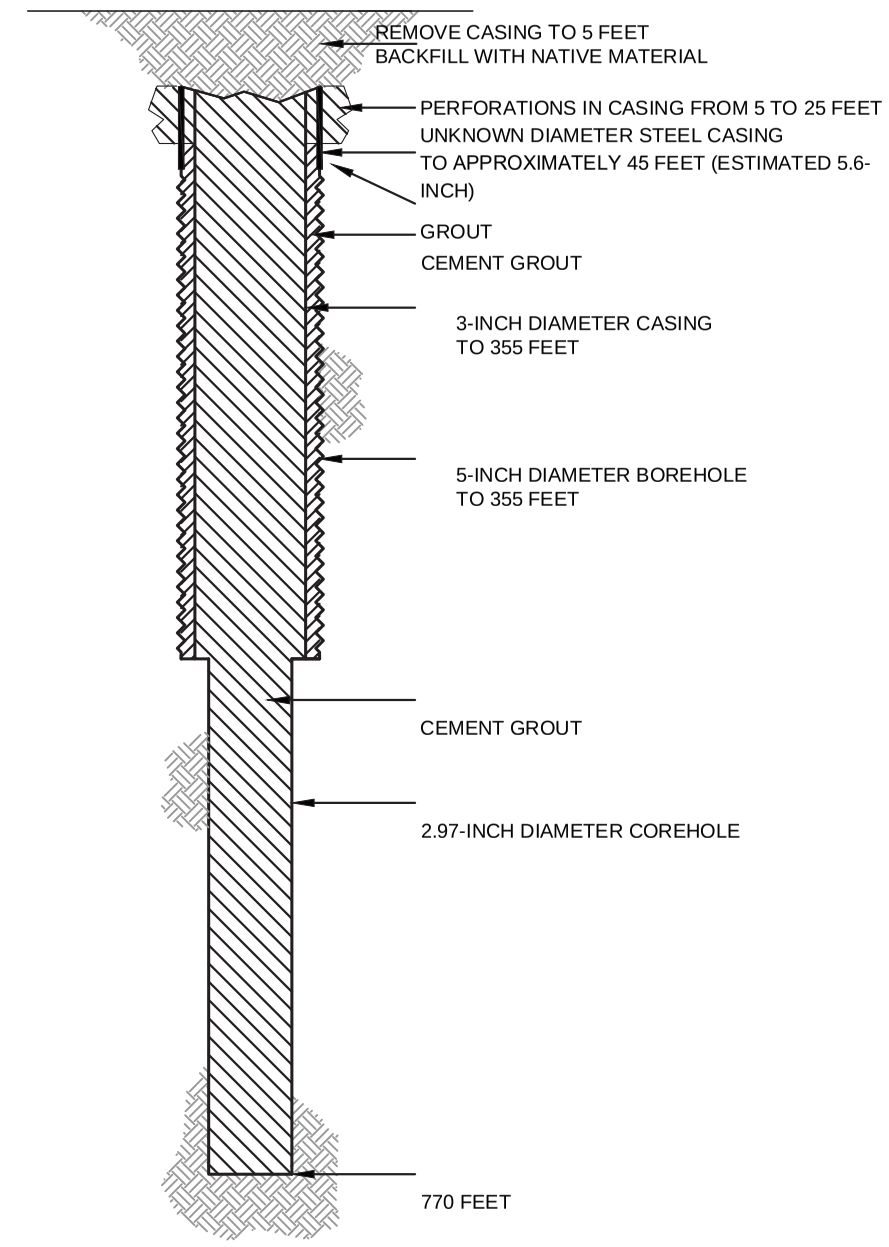

HALEY ALDRICH

FLORENCE COPPER, INC.
FLORENCE, ARIZONA

COREHOLE MCC526 DIAGRAM

FLORENCE COPPER INC.

NOT TO SCALE
SEPTEMBER 2019

FIGURE 1

MOBINI, GITA Printed: 4/21/2017 12:00 PM Layout: ABANDON (2)
\PROJECTS\CURIS RESOURCES38706-CURIS FEASIBILITY\DRAWINGS\EPA\WELL ABANDON\415S_ABANDON.DWG

OMB No. 2040-0042 Approval Expires 4/30/2022

United States Environmental Protection Agency

WELL REWORK RECORD, PLUGGING AND ABANDONMENT PLAN, OR PLUGGING AND ABANDONMENT AFFIDAVIT

Name and Address, Phone Number and/or Email of Permittee

Florence Copper Project
1575 W Hunt Hwy,
Florence, AZ 85132

Permit or EPA ID Number	API Number	Full Well Name
R9UIC-AZ3-FY11-1		MCC527

State	County
Arizona	Pinal

Locate well in two directions from nearest lines of quarter section and drilling unit

Latitude 33.04975493

Longitude -111.4277848

Surface Location

NW **1/4 of** SE **1/4 of Section** 28 **Township** 4S **Range** 9E

_____ **ft. from (N/S)** _____ **Line of quarter section**

_____ **ft. from (E/W)** _____ **Line of quarter section.**

Well Class	Timing of Action (pick one)	Type of Action (pick one)
☐ Class I ☐ Class II ☑ Class III ☐ Class V	☑ Notice Prior to Work Date Expected to Commence March 2021 ☐ Report After Work Date Work Ended	☐ Well Rework ☑ Plugging and Abandonment ☐ Conversion to a Non-Injection Well

Provide a narrative description of the work planned to be performed, or that was performed. Use additional pages as necessary. See instructions.

A workover rig capable of performing the required abandonment operations at the required depths will be moved in and set up over the core hole. The core hole will be inspected to determine the depth to which the hole remains open and if any obstructions are present in the core hole; the presence and condition of any existing collar will also be documented. If necessary, the core hole will be cleaned out to a depth of at least 100 feet below the bedrock-LBFU contact to enable placement of cement seals.

If collar is present, an attempt will be made to remove it. If removal of the collar is not feasible, it will be left in the hole and perforated as needed to allow an annular seal to be placed to a depth of at least 25 feet bgs. In areas of agricultural use, the surface casing will be cut at least 5 feet bgs and removed.

If the collar cannot be removed, it will be perforated from at least 20 feet below the bedrock-LBFU contact to at least 20 feet above the contact; from at least 20 feet below the base of the MFGU to at least 20 feet above the top of the MFGU; and from at least 25 feet bgs to 5 feet bgs.

A tremie pipe will be used to place Type V cement in the open core hole from the bottom of the core hole to the top of the core hole. Cement retainers, as described above, will be used to force cement grout into the annulus and behind perforated intervals, as necessary.

If the hole has been obstructed, as much cement as possible will be placed from 100 feet below the LBFU-bedrock contact to the top of the core hole.

The volume of Type V cement will be recorded and will not be less than the estimated volume of material required to fill each interval. All cement grout will consist of Type V cement, or equivalent approved in accordance with the UIC Permit.

Certification

I certify under the penalty of law that I have personally examined and am familiar with the information submitted in this document and all attachments and that, based on my inquiry of those individuals immediately responsible for obtaining the information, I believe that the information is true, accurate, and complete. I am aware that there are significant penalties for submitting false information, including the possibliity of fine and imprisonment. (Ref. 40 CFR § 144.32)

Name and Official Title *(Please type or print)*	Signature	Date Signed
Dan Johnson, VP - General Manager		10/3/2019

INSTRUCTIONS FOR FORM 7520-19

This form replaces forms 7520-12 and 7520-14. Use this form only when work is planned or has occurred that affects the well's construction or operation as an injection well, including work on the casing, tubing or packer (or for shallow Class V wells, the subsurface fluid emplacement network). Use one form per injection well. While reports or other information developed by contractors or service companies may be attached, this form must be signed by a responsible entity as described at 40 CFR 144.32. Note: operators closing Class V wells should use Form 7520-17.

NAME, ADDRESS, PHONE AND/OR EMAIL OF PERMITTEE: Enter the name and street address, city/town, state, and ZIP code of the permittee. Also provide an email address (if available) and/or a phone number.

PERMIT OR EPA ID NUMBER: Enter the well identification number or permit number assigned to the well by the EPA or the permitting authority.

API NUMBER: Enter the number assigned by the local jurisdiction (usually a State Oil and Gas Agency) using the American Petroleum Institute standard numbering system.

FULL WELL NAME: Enter the full name of the well or project.

Enter the **STATE** and **COUNTY** where the well is located. For States that do not have counties, use the name of that State's equivalent jurisdiction at a more local level.

WELL LOCATION: Fill in the complete township, range, and section to the nearest quarter-quarter section. A township is north or south of the baseline, and a range is east or west of the principal meridian (e.g., T12N, R34W). Also include the distance, in feet, from the nearest north or south line and nearest east or west line of the quarter-section. Also, enter the **latitude** and **longitude** of the well in decimal degrees, to five or six places if possible; be sure to include a negative sign for the longitude of a well in the Western Hemisphere and a negative sign for the latitude of a well in the Southern Hemisphere.

Enter the **WELL CLASS,** i.e., the class of injection well as defined in 40 CFR 144.6.

TIMING OF THE ACTION: Check ***Notice prior to work*** if the activity has not yet occurred (i.e., is planned). Check ***Report after work*** if the activity described has already occurred. As appropriate, include the date the activity is expected to start or the date the activity was completed. (Note this may not be available, e.g., for a plugging plan submitted with a permit application.)

TYPE OF ACTION: Check the appropriate box to describe the kind of activity being reported. Check ***Well Rework*** for work that was/will be performed on the well after it has already been in operation as an injection well. Check ***Plugging and Abandonment*** to report on plans for or descriptions of final closure/plugging after use as an injection well. Check ***Conversion to a Non-Injection Well*** if the well is to be converted to something other than an injection well.

Provide a **NARRATIVE DESCRIPTION** of the work planned to be performed, or that was performed. The narrative should include a description of the main procedures planned or that occurred during the work activity. A service company report, daily report, or similar document may be attached if it includes all the requested information and is clear and legible.

For well reworks, include the following information: The reason for the well rework; depths of activity; type of activity; changes to injection well configuration, well casing, or cement behind casing; any plug added to the well and its depth; any newly drilled interval and its depth; method(s) to demonstrate that the well has mechanical integrity (as applicable); and any deviations from the approved rework plan (as applicable).

For a well plugging plan, include the following information: Reason for the well plugging; number of plugs placed, and their depths; materials used as plugs (e.g., cast iron bridge plug, cement, cement retainer); method to set plugs; and wait-on-cement times, if any. Also provide one or more cost estimates from an independent firm in the business of plugging and abandoning wells to plug the well as described in the plan.

For well plugging affidavit, include the following information: Reason for the well plugging; number of plugs placed, and their depths; materials used as plugs (e.g., cast iron bridge plug, cement, cement retainer); method to set plugs; wait-on-cement times, if any; and any deviations from the approved plugging plan (if applicable).

For conversion to a non-injection well, include the following information: Depths of activity; type of activity; changes to injection well configuration, well casing, or cement behind casing; any plug added to the well and its depth; any newly drilled interval and its depth; depths of new perforations; and method(s) to demonstrate that the well has mechanical integrity (as applicable).

For all of the above activities, include a well sketch depicting the work, results of well tests/logging performed, service company tickets, and any other available information demonstrating how the work was/is to be performed. Also, specify whether depths are below ground surface, relative to Kelly bushing, etc.

CERTIFICATION: This form must be signed and dated by either: a responsible corporate officer for a corporation, by a general partner for a partnership, by the proprietor of a sole proprietorship, or by a principal executive or ranking elected official for a public agency.

PAPERWORK REDUCTION ACT NOTICE: The public reporting and recordkeeping burden for this collection of information is estimated to average between 6.0 and 7.9 hours per response, depending on the injection well class. Burden means the total time, effort, or financial resource expended by persons to generate, maintain, retain, or disclose or provide information to or for a Federal Agency. This includes the time needed to review instructions; develop, acquire, install, and utilize technology and systems for the purposes of collecting, validating, and verifying information, processing and maintaining information, and disclosing and providing information; adjust the existing ways to comply with any previously applicable instructions and requirements; train personnel to be able to respond to the collection of information; search data sources; complete and review the collection of information; and, transmit or otherwise disclose the information. An agency may not conduct or sponsor, and a person is not required to respond to, a collection of information unless it displays a currently valid OMB control number. Send comments on the Agency's need for this information, the accuracy of the provided burden estimates, and any suggested methods for minimizing respondent burden, including the use of automated collection techniques to Director, Collection Strategies Division, U.S. Environmental Protection Agency (2822), 1200 Pennsylvania Ave., NW., Washington, D.C. 20460. Include the OMB control number in any correspondence. Do not send the completed forms to this address.

AS-BUILT COREHOLE MCC527

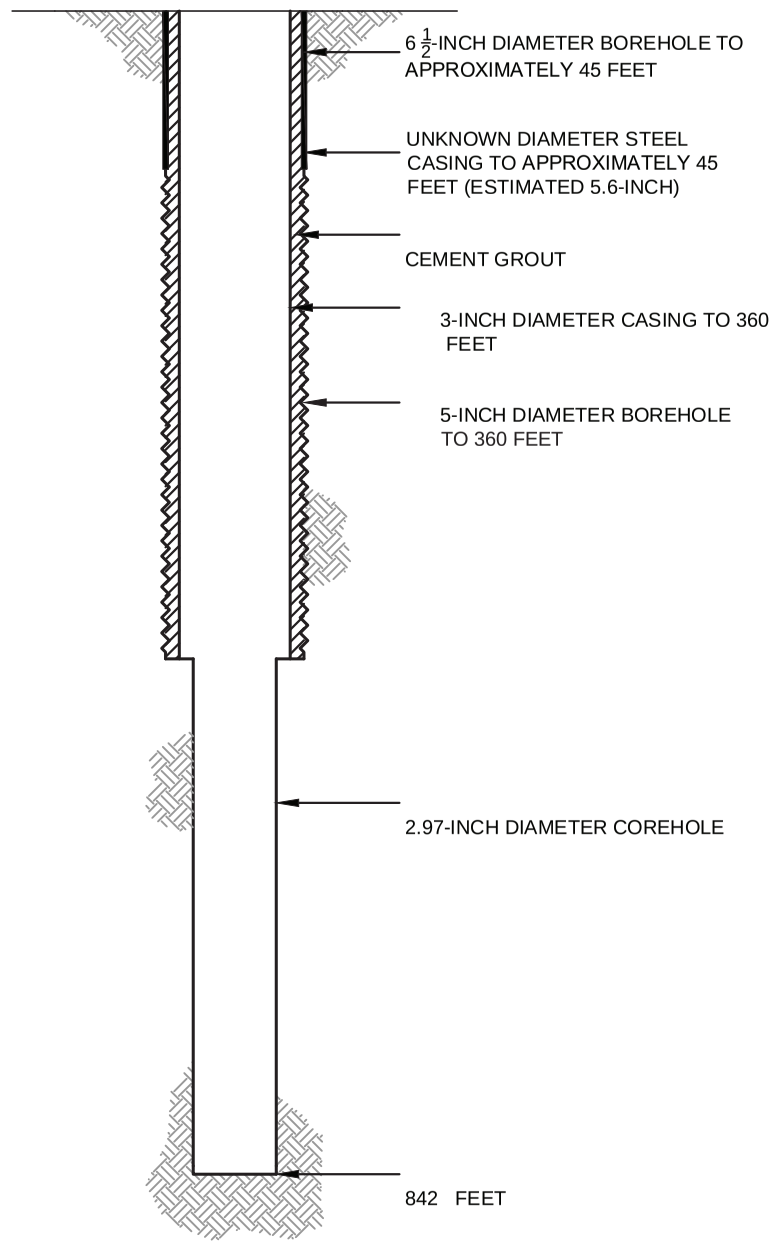

PROPOSED PLUGGING AND ABANDONMENT COREHOLE MCC527

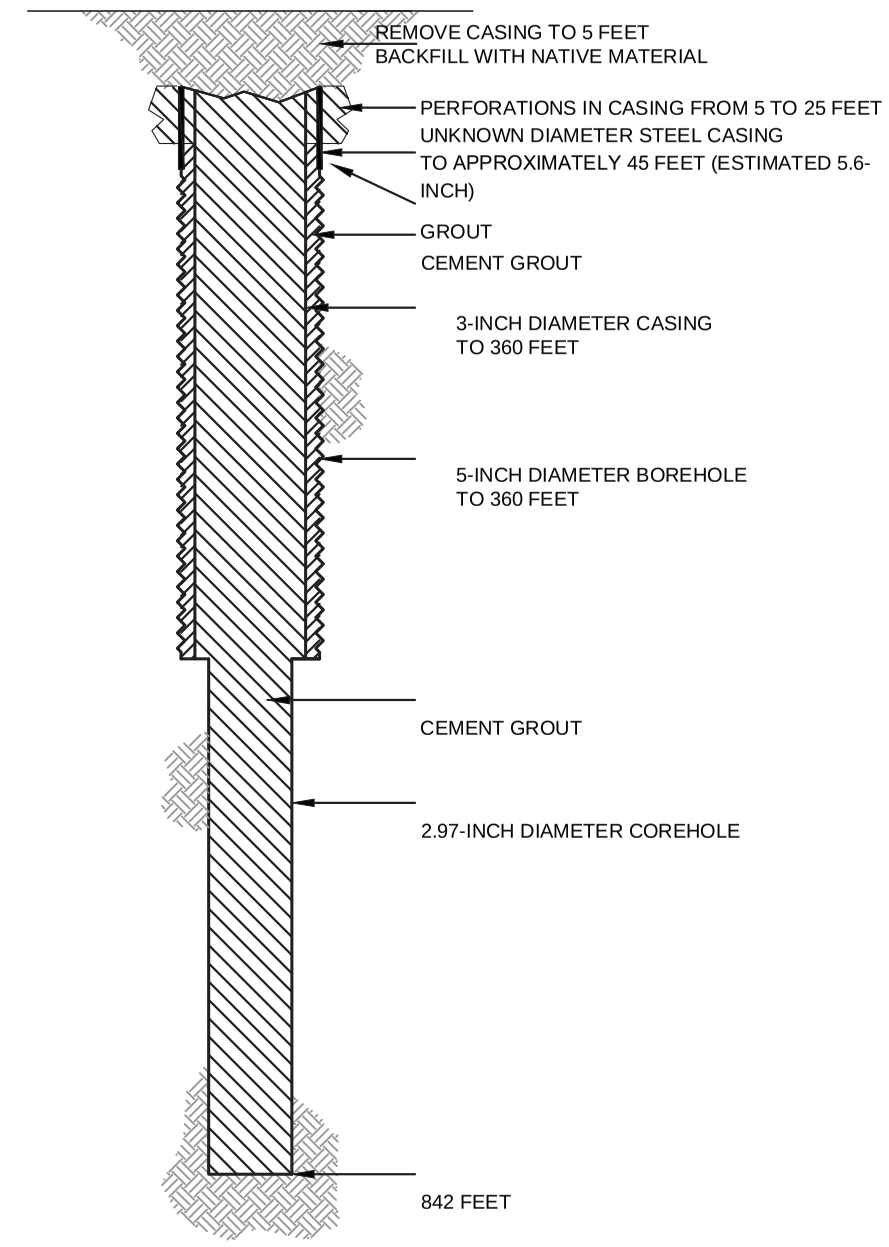

HALEY ALDRICH

FLORENCE COPPER, INC.
FLORENCE, ARIZONA

COREHOLE MCC527 DIAGRAM

FLORENCE COPPER INC.

NOT TO SCALE
SEPTEMBER 2019

FIGURE 1

MOBINI, GITA Printed: 4/21/2017 12:00 PM Layout: ABANDON (2)
\PROJECTS\CURIS RESOURCES38706-CURIS FEASIBILITY\DRAWINGS\EPA\WELL ABANDON\415S_ABANDON.DWG

OMB No. 2040-0042 Approval Expires 4/30/2022

United States Environmental Protection Agency

WELL REWORK RECORD, PLUGGING AND ABANDONMENT PLAN, OR PLUGGING AND ABANDONMENT AFFIDAVIT

Name and Address, Phone Number and/or Email of Permittee

Florence Copper Project
1575 W Hunt Hwy,
Florence, AZ 85132

Permit or EPA ID Number	API Number	Full Well Name
R9UIC-AZ3-FY11-1		MCC531

State	County
Arizona	Pinal

Locate well in two directions from nearest lines of quarter section and drilling unit

Latitude 33.04854907

Longitude -111.428125

Surface Location

SW **1/4 of** SE **1/4 of Section** 28 **Township** 4S **Range** 9E

_____ **ft. from (N/S)** _____ **Line of quarter section**

_____ **ft. from (E/W)** _____ **Line of quarter section.**

Well Class	Timing of Action (pick one)	Type of Action (pick one)
☐ Class I ☐ Class II ☑ Class III ☐ Class V	☑ Notice Prior to Work Date Expected to Commence March 2021 ☐ Report After Work Date Work Ended	☐ Well Rework ☑ Plugging and Abandonment ☐ Conversion to a Non-Injection Well

Provide a narrative description of the work planned to be performed, or that was performed. Use additional pages as necessary. See instructions.

A workover rig capable of performing the required abandonment operations at the required depths will be moved in and set up over the core hole. The core hole will be inspected to determine the depth to which the hole remains open and if any obstructions are present in the core hole; the presence and condition of any existing collar will also be documented. If necessary, the core hole will be cleaned out to a depth of at least 100 feet below the bedrock-LBFU contact to enable placement of cement seals.

If collar is present, an attempt will be made to remove it. If removal of the collar is not feasible, it will be left in the hole and perforated as needed to allow an annular seal to be placed to a depth of at least 25 feet bgs. In areas of agricultural use, the surface casing will be cut at least 5 feet bgs and removed.

If the collar cannot be removed, it will be perforated from at least 20 feet below the bedrock-LBFU contact to at least 20 feet above the contact; from at least 20 feet below the base of the MFGU to at least 20 feet above the top of the MFGU; and from at least 25 feet bgs to 5 feet bgs.

A tremie pipe will be used to place Type V cement in the open core hole from the bottom of the core hole to the top of the core hole. Cement retainers, as described above, will be used to force cement grout into the annulus and behind perforated intervals, as necessary.

If the hole has been obstructed, as much cement as possible will be placed from 100 feet below the LBFU-bedrock contact to the top of the core hole.

The volume of Type V cement will be recorded and will not be less than the estimated volume of material required to fill each interval. All cement grout will consist of Type V cement, or equivalent approved in accordance with the UIC Permit.

Certification

I certify under the penalty of law that I have personally examined and am familiar with the information submitted in this document and all attachments and that, based on my inquiry of those individuals immediately responsible for obtaining the information, I believe that the information is true, accurate, and complete. I am aware that there are significant penalties for submitting false information, including the possibliity of fine and imprisonment. (Ref. 40 CFR § 144.32)

Name and Official Title *(Please type or print)*	Signature	Date Signed
Dan Johnson, VP - General Manager		10/3/2019

INSTRUCTIONS FOR FORM 7520-19

This form replaces forms 7520-12 and 7520-14. Use this form only when work is planned or has occurred that affects the well's construction or operation as an injection well, including work on the casing, tubing or packer (or for shallow Class V wells, the subsurface fluid emplacement network). Use one form per injection well. While reports or other information developed by contractors or service companies may be attached, this form must be signed by a responsible entity as described at 40 CFR 144.32. Note: operators closing Class V wells should use Form 7520-17.

NAME, ADDRESS, PHONE AND/OR EMAIL OF PERMITTEE: Enter the name and street address, city/town, state, and ZIP code of the permittee. Also provide an email address (if available) and/or a phone number.

PERMIT OR EPA ID NUMBER: Enter the well identification number or permit number assigned to the well by the EPA or the permitting authority.

API NUMBER: Enter the number assigned by the local jurisdiction (usually a State Oil and Gas Agency) using the American Petroleum Institute standard numbering system.

FULL WELL NAME: Enter the full name of the well or project.

Enter the **STATE** and **COUNTY** where the well is located. For States that do not have counties, use the name of that State's equivalent jurisdiction at a more local level.

WELL LOCATION: Fill in the complete township, range, and section to the nearest quarter-quarter section. A township is north or south of the baseline, and a range is east or west of the principal meridian (e.g., T12N, R34W). Also include the distance, in feet, from the nearest north or south line and nearest east or west line of the quarter-section. Also, enter the **latitude** and **longitude** of the well in decimal degrees, to five or six places if possible; be sure to include a negative sign for the longitude of a well in the Western Hemisphere and a negative sign for the latitude of a well in the Southern Hemisphere.

Enter the **WELL CLASS,** i.e., the class of injection well as defined in 40 CFR 144.6.

TIMING OF THE ACTION: Check ***Notice prior to work*** if the activity has not yet occurred (i.e., is planned). Check ***Report after work*** if the activity described has already occurred. As appropriate, include the date the activity is expected to start or the date the activity was completed. (Note this may not be available, e.g., for a plugging plan submitted with a permit application.)

TYPE OF ACTION: Check the appropriate box to describe the kind of activity being reported. Check ***Well Rework*** for work that was/will be performed on the well after it has already been in operation as an injection well. Check ***Plugging and Abandonment*** to report on plans for or descriptions of final closure/plugging after use as an injection well. Check ***Conversion to a Non-Injection Well*** if the well is to be converted to something other than an injection well.

Provide a **NARRATIVE DESCRIPTION** of the work planned to be performed, or that was performed. The narrative should include a description of the main procedures planned or that occurred during the work activity. A service company report, daily report, or similar document may be attached if it includes all the requested information and is clear and legible.

For well reworks, include the following information: The reason for the well rework; depths of activity; type of activity; changes to injection well configuration, well casing, or cement behind casing; any plug added to the well and its depth; any newly drilled interval and its depth; method(s) to demonstrate that the well has mechanical integrity (as applicable); and any deviations from the approved rework plan (as applicable).

For a well plugging plan, include the following information: Reason for the well plugging; number of plugs placed, and their depths; materials used as plugs (e.g., cast iron bridge plug, cement, cement retainer); method to set plugs; and wait-on-cement times, if any. Also provide one or more cost estimates from an independent firm in the business of plugging and abandoning wells to plug the well as described in the plan.

For well plugging affidavit, include the following information: Reason for the well plugging; number of plugs placed, and their depths; materials used as plugs (e.g., cast iron bridge plug, cement, cement retainer); method to set plugs; wait-on-cement times, if any; and any deviations from the approved plugging plan (if applicable).

For conversion to a non-injection well, include the following information: Depths of activity; type of activity; changes to injection well configuration, well casing, or cement behind casing; any plug added to the well and its depth; any newly drilled interval and its depth; depths of new perforations; and method(s) to demonstrate that the well has mechanical integrity (as applicable).

For all of the above activities, include a well sketch depicting the work, results of well tests/logging performed, service company tickets, and any other available information demonstrating how the work was/is to be performed. Also, specify whether depths are below ground surface, relative to Kelly bushing, etc.

CERTIFICATION: This form must be signed and dated by either: a responsible corporate officer for a corporation, by a general partner for a partnership, by the proprietor of a sole proprietorship, or by a principal executive or ranking elected official for a public agency.

PAPERWORK REDUCTION ACT NOTICE: The public reporting and recordkeeping burden for this collection of information is estimated to average between 6.0 and 7.9 hours per response, depending on the injection well class. Burden means the total time, effort, or financial resource expended by persons to generate, maintain, retain, or disclose or provide information to or for a Federal Agency. This includes the time needed to review instructions; develop, acquire, install, and utilize technology and systems for the purposes of collecting, validating, and verifying information, processing and maintaining information, and disclosing and providing information; adjust the existing ways to comply with any previously applicable instructions and requirements; train personnel to be able to respond to the collection of information; search data sources; complete and review the collection of information; and, transmit or otherwise disclose the information. An agency may not conduct or sponsor, and a person is not required to respond to, a collection of information unless it displays a currently valid OMB control number. Send comments on the Agency's need for this information, the accuracy of the provided burden estimates, and any suggested methods for minimizing respondent burden, including the use of automated collection techniques to Director, Collection Strategies Division, U.S. Environmental Protection Agency (2822), 1200 Pennsylvania Ave., NW., Washington, D.C. 20460. Include the OMB control number in any correspondence. Do not send the completed forms to this address.

AS-BUILT COREHOLE MCC531

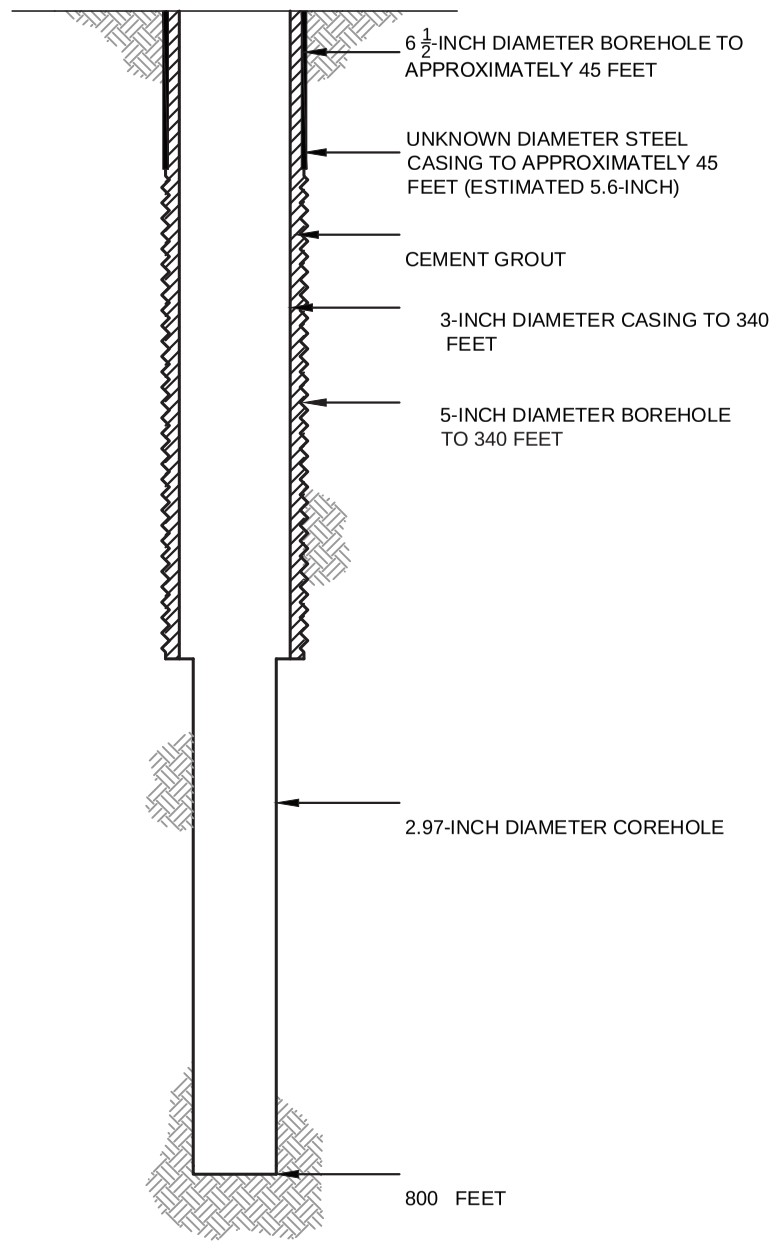

PROPOSED PLUGGING AND ABANDONMENT COREHOLE MCC531

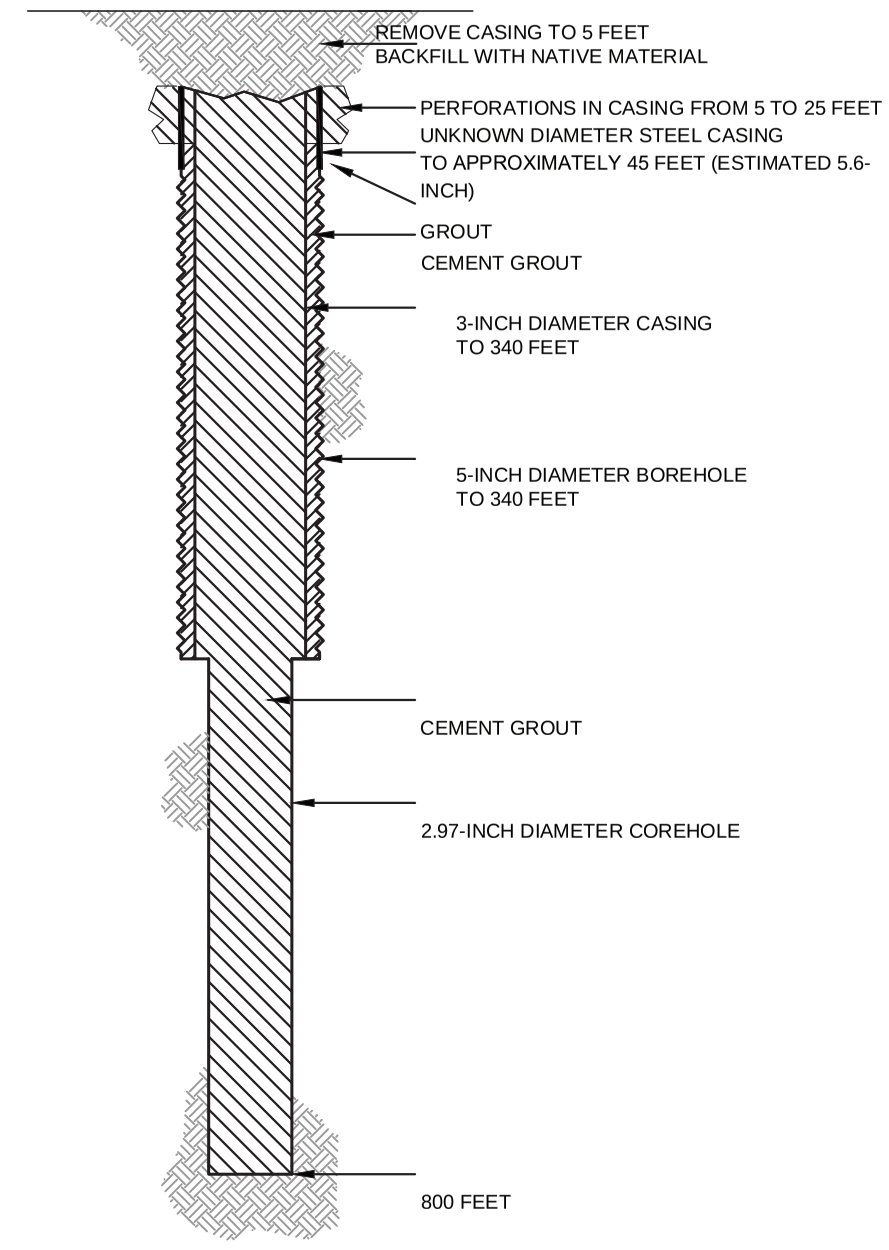

HALEY ALDRICH

FLORENCE COPPER, INC.
FLORENCE, ARIZONA

COREHOLE MCC531 DIAGRAM

FLORENCE COPPER INC.

NOT TO SCALE
SEPTEMBER 2019

FIGURE 1

MOBINI, GITA Printed: 4/21/2017 12:00 PM Layout: ABANDON (2)
\PROJECTS\CURIS RESOURCES38706-CURIS FEASIBILITY\DRAWINGS\EPA\WELL ABANDON\415S_ABANDON.DWG

OMB No. 2040-0042 Approval Expires 4/30/2022

United States Environmental Protection Agency

WELL REWORK RECORD, PLUGGING AND ABANDONMENT PLAN, OR PLUGGING AND ABANDONMENT AFFIDAVIT

Name and Address, Phone Number and/or Email of Permittee

Florence Copper Project
1575 W Hunt Hwy,
Florence, AZ 85132

Permit or EPA ID Number	API Number	Full Well Name
R9UIC-AZ3-FY11-1		MCC532

State	County
Arizona	Pinal

Locate well in two directions from nearest lines of quarter section and drilling unit

Latitude 33.04618705

Longitude -111.4314015

Surface Location

SE **1/4 of** SW **1/4 of Section** 28 **Township** 4S **Range** 9E

_____ **ft. from (N/S)** _____ **Line of quarter section**

_____ **ft. from (E/W)** _____ **Line of quarter section.**

Well Class	Timing of Action (pick one)	Type of Action (pick one)
☐ Class I ☐ Class II ☑ Class III ☐ Class V	☑ Notice Prior to Work Date Expected to Commence March 2021 ☐ Report After Work Date Work Ended	☐ Well Rework ☑ Plugging and Abandonment ☐ Conversion to a Non-Injection Well

Provide a narrative description of the work planned to be performed, or that was performed. Use additional pages as necessary. See instructions.

A workover rig capable of performing the required abandonment operations at the required depths will be moved in and set up over the core hole. The core hole will be inspected to determine the depth to which the hole remains open and if any obstructions are present in the core hole; the presence and condition of any existing collar will also be documented. If necessary, the core hole will be cleaned out to a depth of at least 100 feet below the bedrock-LBFU contact to enable placement of cement seals.

If collar is present, an attempt will be made to remove it. If removal of the collar is not feasible, it will be left in the hole and perforated as needed to allow an annular seal to be placed to a depth of at least 25 feet bgs. In areas of agricultural use, the surface casing will be cut at least 5 feet bgs and removed.

If the collar cannot be removed, it will be perforated from at least 20 feet below the bedrock-LBFU contact to at least 20 feet above the contact; from at least 20 feet below the base of the MFGU to at least 20 feet above the top of the MFGU; and from at least 25 feet bgs to 5 feet bgs.

A tremie pipe will be used to place Type V cement in the open core hole from the bottom of the core hole to the top of the core hole. Cement retainers, as described above, will be used to force cement grout into the annulus and behind perforated intervals, as necessary.

If the hole has been obstructed, as much cement as possible will be placed from 100 feet below the LBFU-bedrock contact to the top of the core hole.

The volume of Type V cement will be recorded and will not be less than the estimated volume of material required to fill each interval. All cement grout will consist of Type V cement, or equivalent approved in accordance with the UIC Permit.

Certification

I certify under the penalty of law that I have personally examined and am familiar with the information submitted in this document and all attachments and that, based on my inquiry of those individuals immediately responsible for obtaining the information, I believe that the information is true, accurate, and complete. I am aware that there are significant penalties for submitting false information, including the possibliity of fine and imprisonment. (Ref. 40 CFR § 144.32)

Name and Official Title *(Please type or print)*	Signature	Date Signed
Dan Johnson, VP - General Manager		10/3/2019

INSTRUCTIONS FOR FORM 7520-19

This form replaces forms 7520-12 and 7520-14. Use this form only when work is planned or has occurred that affects the well's construction or operation as an injection well, including work on the casing, tubing or packer (or for shallow Class V wells, the subsurface fluid emplacement network). Use one form per injection well. While reports or other information developed by contractors or service companies may be attached, this form must be signed by a responsible entity as described at 40 CFR 144.32. Note: operators closing Class V wells should use Form 7520-17.

NAME, ADDRESS, PHONE AND/OR EMAIL OF PERMITTEE: Enter the name and street address, city/town, state, and ZIP code of the permittee. Also provide an email address (if available) and/or a phone number.

PERMIT OR EPA ID NUMBER: Enter the well identification number or permit number assigned to the well by the EPA or the permitting authority.

API NUMBER: Enter the number assigned by the local jurisdiction (usually a State Oil and Gas Agency) using the American Petroleum Institute standard numbering system.

FULL WELL NAME: Enter the full name of the well or project.

Enter the **STATE** and **COUNTY** where the well is located. For States that do not have counties, use the name of that State's equivalent jurisdiction at a more local level.

WELL LOCATION: Fill in the complete township, range, and section to the nearest quarter-quarter section. A township is north or south of the baseline, and a range is east or west of the principal meridian (e.g., T12N, R34W). Also include the distance, in feet, from the nearest north or south line and nearest east or west line of the quarter-section. Also, enter the **latitude** and **longitude** of the well in decimal degrees, to five or six places if possible; be sure to include a negative sign for the longitude of a well in the Western Hemisphere and a negative sign for the latitude of a well in the Southern Hemisphere.

Enter the **WELL CLASS,** i.e., the class of injection well as defined in 40 CFR 144.6.

TIMING OF THE ACTION: Check ***Notice prior to work*** if the activity has not yet occurred (i.e., is planned). Check ***Report after work*** if the activity described has already occurred. As appropriate, include the date the activity is expected to start or the date the activity was completed. (Note this may not be available, e.g., for a plugging plan submitted with a permit application.)

TYPE OF ACTION: Check the appropriate box to describe the kind of activity being reported. Check ***Well Rework*** for work that was/will be performed on the well after it has already been in operation as an injection well. Check ***Plugging and Abandonment*** to report on plans for or descriptions of final closure/plugging after use as an injection well. Check ***Conversion to a Non-Injection Well*** if the well is to be converted to something other than an injection well.

Provide a **NARRATIVE DESCRIPTION** of the work planned to be performed, or that was performed. The narrative should include a description of the main procedures planned or that occurred during the work activity. A service company report, daily report, or similar document may be attached if it includes all the requested information and is clear and legible.

For well reworks, include the following information: The reason for the well rework; depths of activity; type of activity; changes to injection well configuration, well casing, or cement behind casing; any plug added to the well and its depth; any newly drilled interval and its depth; method(s) to demonstrate that the well has mechanical integrity (as applicable); and any deviations from the approved rework plan (as applicable).

For a well plugging plan, include the following information: Reason for the well plugging; number of plugs placed, and their depths; materials used as plugs (e.g., cast iron bridge plug, cement, cement retainer); method to set plugs; and wait-on-cement times, if any. Also provide one or more cost estimates from an independent firm in the business of plugging and abandoning wells to plug the well as described in the plan.

For well plugging affidavit, include the following information: Reason for the well plugging; number of plugs placed, and their depths; materials used as plugs (e.g., cast iron bridge plug, cement, cement retainer); method to set plugs; wait-on-cement times, if any; and any deviations from the approved plugging plan (if applicable).

For conversion to a non-injection well, include the following information: Depths of activity; type of activity; changes to injection well configuration, well casing, or cement behind casing; any plug added to the well and its depth; any newly drilled interval and its depth; depths of new perforations; and method(s) to demonstrate that the well has mechanical integrity (as applicable).

For all of the above activities, include a well sketch depicting the work, results of well tests/logging performed, service company tickets, and any other available information demonstrating how the work was/is to be performed. Also, specify whether depths are below ground surface, relative to Kelly bushing, etc.

CERTIFICATION: This form must be signed and dated by either: a responsible corporate officer for a corporation, by a general partner for a partnership, by the proprietor of a sole proprietorship, or by a principal executive or ranking elected official for a public agency.

PAPERWORK REDUCTION ACT NOTICE: The public reporting and recordkeeping burden for this collection of information is estimated to average between 6.0 and 7.9 hours per response, depending on the injection well class. Burden means the total time, effort, or financial resource expended by persons to generate, maintain, retain, or disclose or provide information to or for a Federal Agency. This includes the time needed to review instructions; develop, acquire, install, and utilize technology and systems for the purposes of collecting, validating, and verifying information, processing and maintaining information, and disclosing and providing information; adjust the existing ways to comply with any previously applicable instructions and requirements; train personnel to be able to respond to the collection of information; search data sources; complete and review the collection of information; and, transmit or otherwise disclose the information. An agency may not conduct or sponsor, and a person is not required to respond to, a collection of information unless it displays a currently valid OMB control number. Send comments on the Agency's need for this information, the accuracy of the provided burden estimates, and any suggested methods for minimizing respondent burden, including the use of automated collection techniques to Director, Collection Strategies Division, U.S. Environmental Protection Agency (2822), 1200 Pennsylvania Ave., NW., Washington, D.C. 20460. Include the OMB control number in any correspondence. Do not send the completed forms to this address.

AS-BUILT COREHOLE MCC532

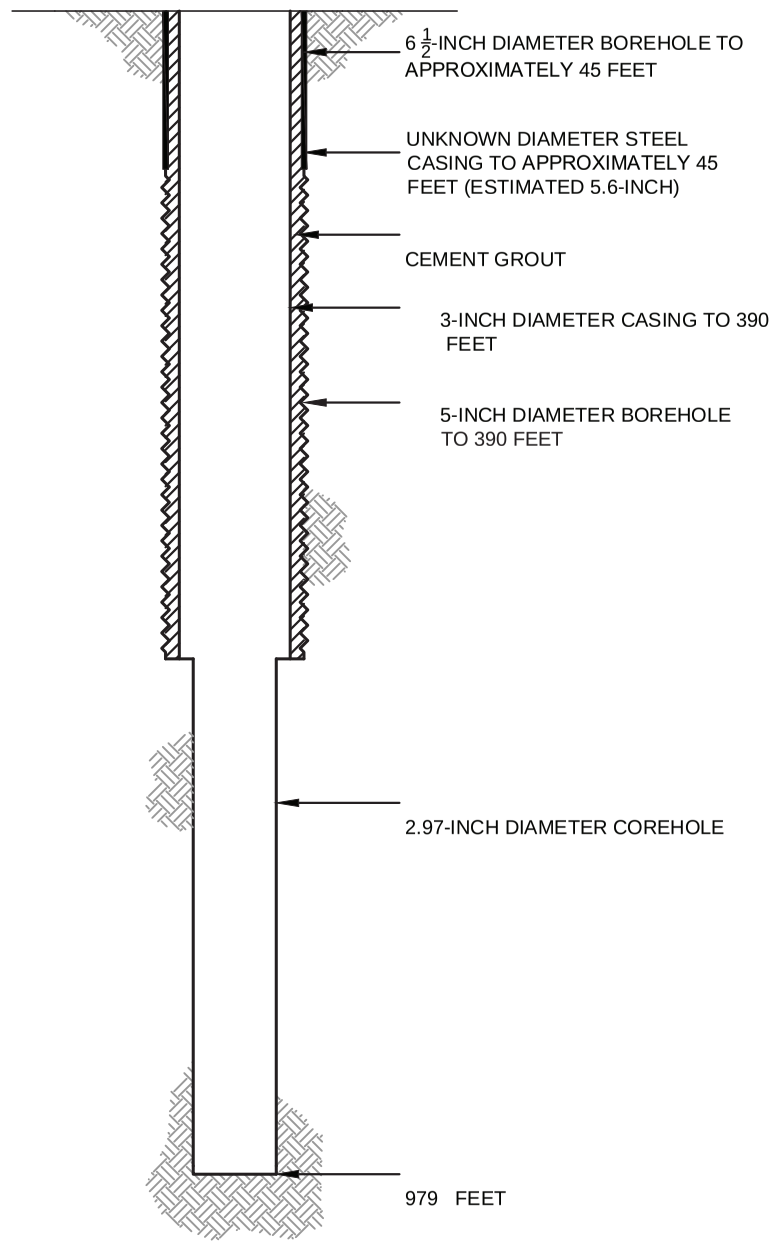

PROPOSED PLUGGING AND ABANDONMENT COREHOLE MCC532

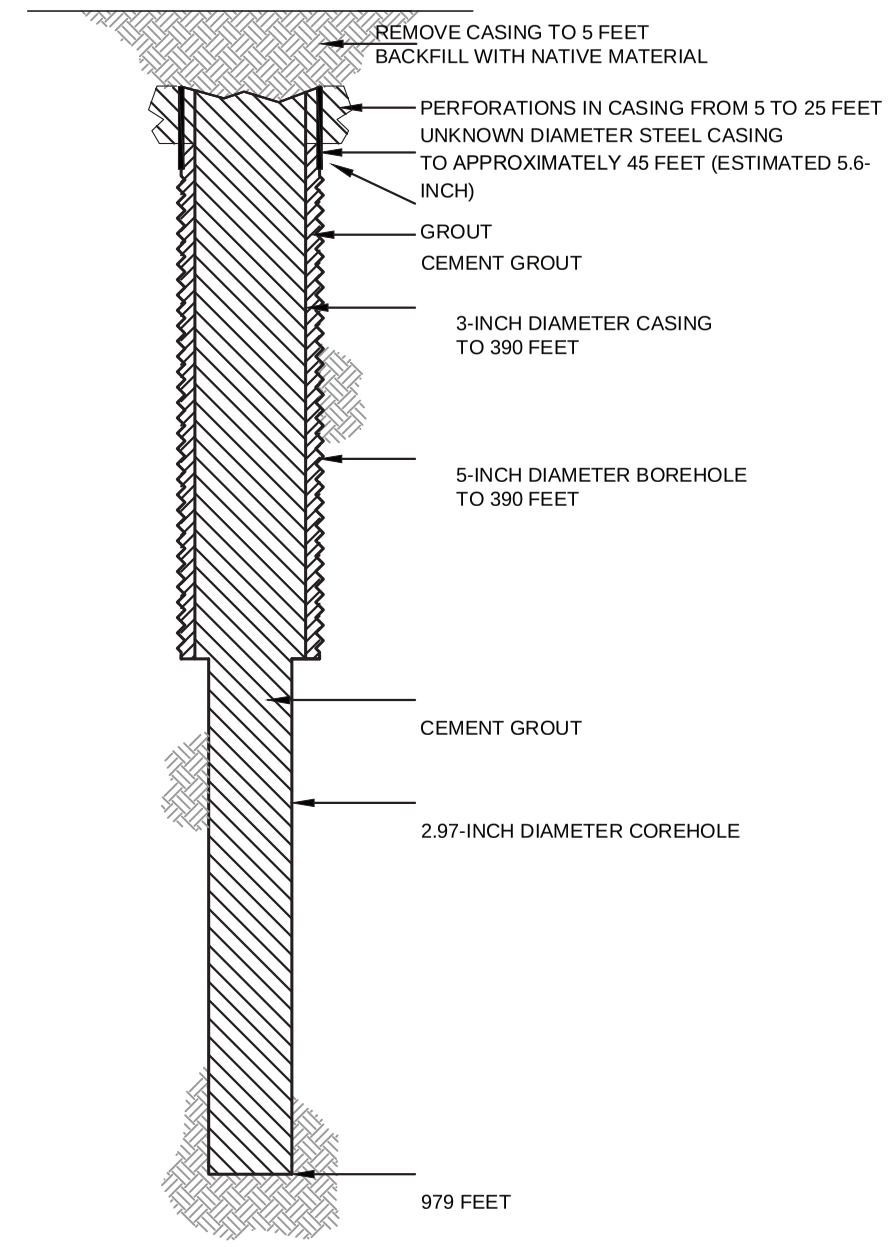

HALEY ALDRICH

FLORENCE COPPER, INC.
FLORENCE, ARIZONA

COREHOLE MCC532 DIAGRAM

FLORENCE COPPER INC.

NOT TO SCALE
SEPTEMBER 2019

FIGURE 1

MOBINI, GITA Printed: 4/21/2017 12:00 PM Layout: ABANDON (2)
\PROJECTS\CURIS RESOURCES38706-CURIS FEASIBILITY\DRAWINGS\EPA\WELL ABANDON\415S_ABANDON.DWG

OMB No. 2040-0042 Approval Expires 4/30/2022

United States Environmental Protection Agency

WELL REWORK RECORD, PLUGGING AND ABANDONMENT PLAN, OR PLUGGING AND ABANDONMENT AFFIDAVIT

Name and Address, Phone Number and/or Email of Permittee

Florence Copper Project
1575 W Hunt Hwy,
Florence, AZ 85132

Permit or EPA ID Number	API Number	Full Well Name
R9UIC-AZ3-FY11-1		MCC533

State	County
Arizona	Pinal

Locate well in two directions from nearest lines of quarter section and drilling unit

Latitude 33.04863601

Longitude -111.4325897

Surface Location

SE **1/4 of** SW **1/4 of Section** 28 **Township** 4S **Range** 9E

_____ **ft. from (N/S)** _____ **Line of quarter section**

_____ **ft. from (E/W)** _____ **Line of quarter section.**

Well Class	Timing of Action (pick one)	Type of Action (pick one)
☐ Class I ☐ Class II ☑ Class III ☐ Class V	☑ Notice Prior to Work Date Expected to Commence March 2021 ☐ Report After Work Date Work Ended	☐ Well Rework ☑ Plugging and Abandonment ☐ Conversion to a Non-Injection Well

Provide a narrative description of the work planned to be performed, or that was performed. Use additional pages as necessary. See instructions.

A workover rig capable of performing the required abandonment operations at the required depths will be moved in and set up over the core hole. The core hole will be inspected to determine the depth to which the hole remains open and if any obstructions are present in the core hole; the presence and condition of any existing collar will also be documented. If necessary, the core hole will be cleaned out to a depth of at least 100 feet below the bedrock-LBFU contact to enable placement of cement seals.

If collar is present, an attempt will be made to remove it. If removal of the collar is not feasible, it will be left in the hole and perforated as needed to allow an annular seal to be placed to a depth of at least 25 feet bgs. In areas of agricultural use, the surface casing will be cut at least 5 feet bgs and removed.

If the collar cannot be removed, it will be perforated from at least 20 feet below the bedrock-LBFU contact to at least 20 feet above the contact; from at least 20 feet below the base of the MFGU to at least 20 feet above the top of the MFGU; and from at least 25 feet bgs to 5 feet bgs.

A tremie pipe will be used to place Type V cement in the open core hole from the bottom of the core hole to the top of the core hole. Cement retainers, as described above, will be used to force cement grout into the annulus and behind perforated intervals, as necessary.

If the hole has been obstructed, as much cement as possible will be placed from 100 feet below the LBFU-bedrock contact to the top of the core hole.

The volume of Type V cement will be recorded and will not be less than the estimated volume of material required to fill each interval. All cement grout will consist of Type V cement, or equivalent approved in accordance with the UIC Permit.

Certification

I certify under the penalty of law that I have personally examined and am familiar with the information submitted in this document and all attachments and that, based on my inquiry of those individuals immediately responsible for obtaining the information, I believe that the information is true, accurate, and complete. I am aware that there are significant penalties for submitting false information, including the possibliity of fine and imprisonment. (Ref. 40 CFR § 144.32)

Name and Official Title *(Please type or print)*	Signature	Date Signed
Dan Johnson, VP - General Manager		10/3/2019

INSTRUCTIONS FOR FORM 7520-19

This form replaces forms 7520-12 and 7520-14. Use this form only when work is planned or has occurred that affects the well's construction or operation as an injection well, including work on the casing, tubing or packer (or for shallow Class V wells, the subsurface fluid emplacement network). Use one form per injection well. While reports or other information developed by contractors or service companies may be attached, this form must be signed by a responsible entity as described at 40 CFR 144.32. Note: operators closing Class V wells should use Form 7520-17.

NAME, ADDRESS, PHONE AND/OR EMAIL OF PERMITTEE: Enter the name and street address, city/town, state, and ZIP code of the permittee. Also provide an email address (if available) and/or a phone number.

PERMIT OR EPA ID NUMBER: Enter the well identification number or permit number assigned to the well by the EPA or the permitting authority.

API NUMBER: Enter the number assigned by the local jurisdiction (usually a State Oil and Gas Agency) using the American Petroleum Institute standard numbering system.

FULL WELL NAME: Enter the full name of the well or project.

Enter the **STATE** and **COUNTY** where the well is located. For States that do not have counties, use the name of that State's equivalent jurisdiction at a more local level.

WELL LOCATION: Fill in the complete township, range, and section to the nearest quarter-quarter section. A township is north or south of the baseline, and a range is east or west of the principal meridian (e.g., T12N, R34W). Also include the distance, in feet, from the nearest north or south line and nearest east or west line of the quarter-section. Also, enter the **latitude** and **longitude** of the well in decimal degrees, to five or six places if possible; be sure to include a negative sign for the longitude of a well in the Western Hemisphere and a negative sign for the latitude of a well in the Southern Hemisphere.

Enter the **WELL CLASS,** i.e., the class of injection well as defined in 40 CFR 144.6.

TIMING OF THE ACTION: Check ***Notice prior to work*** if the activity has not yet occurred (i.e., is planned). Check ***Report after work*** if the activity described has already occurred. As appropriate, include the date the activity is expected to start or the date the activity was completed. (Note this may not be available, e.g., for a plugging plan submitted with a permit application.)

TYPE OF ACTION: Check the appropriate box to describe the kind of activity being reported. Check ***Well Rework*** for work that was/will be performed on the well after it has already been in operation as an injection well. Check ***Plugging and Abandonment*** to report on plans for or descriptions of final closure/plugging after use as an injection well. Check ***Conversion to a Non-Injection Well*** if the well is to be converted to something other than an injection well.

Provide a **NARRATIVE DESCRIPTION** of the work planned to be performed, or that was performed. The narrative should include a description of the main procedures planned or that occurred during the work activity. A service company report, daily report, or similar document may be attached if it includes all the requested information and is clear and legible.

For well reworks, include the following information: The reason for the well rework; depths of activity; type of activity; changes to injection well configuration, well casing, or cement behind casing; any plug added to the well and its depth; any newly drilled interval and its depth; method(s) to demonstrate that the well has mechanical integrity (as applicable); and any deviations from the approved rework plan (as applicable).

For a well plugging plan, include the following information: Reason for the well plugging; number of plugs placed, and their depths; materials used as plugs (e.g., cast iron bridge plug, cement, cement retainer); method to set plugs; and wait-on-cement times, if any. Also provide one or more cost estimates from an independent firm in the business of plugging and abandoning wells to plug the well as described in the plan.

For well plugging affidavit, include the following information: Reason for the well plugging; number of plugs placed, and their depths; materials used as plugs (e.g., cast iron bridge plug, cement, cement retainer); method to set plugs; wait-on-cement times, if any; and any deviations from the approved plugging plan (if applicable).

For conversion to a non-injection well, include the following information: Depths of activity; type of activity; changes to injection well configuration, well casing, or cement behind casing; any plug added to the well and its depth; any newly drilled interval and its depth; depths of new perforations; and method(s) to demonstrate that the well has mechanical integrity (as applicable).

For all of the above activities, include a well sketch depicting the work, results of well tests/logging performed, service company tickets, and any other available information demonstrating how the work was/is to be performed. Also, specify whether depths are below ground surface, relative to Kelly bushing, etc.

CERTIFICATION: This form must be signed and dated by either: a responsible corporate officer for a corporation, by a general partner for a partnership, by the proprietor of a sole proprietorship, or by a principal executive or ranking elected official for a public agency.

PAPERWORK REDUCTION ACT NOTICE: The public reporting and recordkeeping burden for this collection of information is estimated to average between 6.0 and 7.9 hours per response, depending on the injection well class. Burden means the total time, effort, or financial resource expended by persons to generate, maintain, retain, or disclose or provide information to or for a Federal Agency. This includes the time needed to review instructions; develop, acquire, install, and utilize technology and systems for the purposes of collecting, validating, and verifying information, processing and maintaining information, and disclosing and providing information; adjust the existing ways to comply with any previously applicable instructions and requirements; train personnel to be able to respond to the collection of information; search data sources; complete and review the collection of information; and, transmit or otherwise disclose the information. An agency may not conduct or sponsor, and a person is not required to respond to, a collection of information unless it displays a currently valid OMB control number. Send comments on the Agency's need for this information, the accuracy of the provided burden estimates, and any suggested methods for minimizing respondent burden, including the use of automated collection techniques to Director, Collection Strategies Division, U.S. Environmental Protection Agency (2822), 1200 Pennsylvania Ave., NW., Washington, D.C. 20460. Include the OMB control number in any correspondence. Do not send the completed forms to this address.

AS-BUILT COREHOLE MCC533

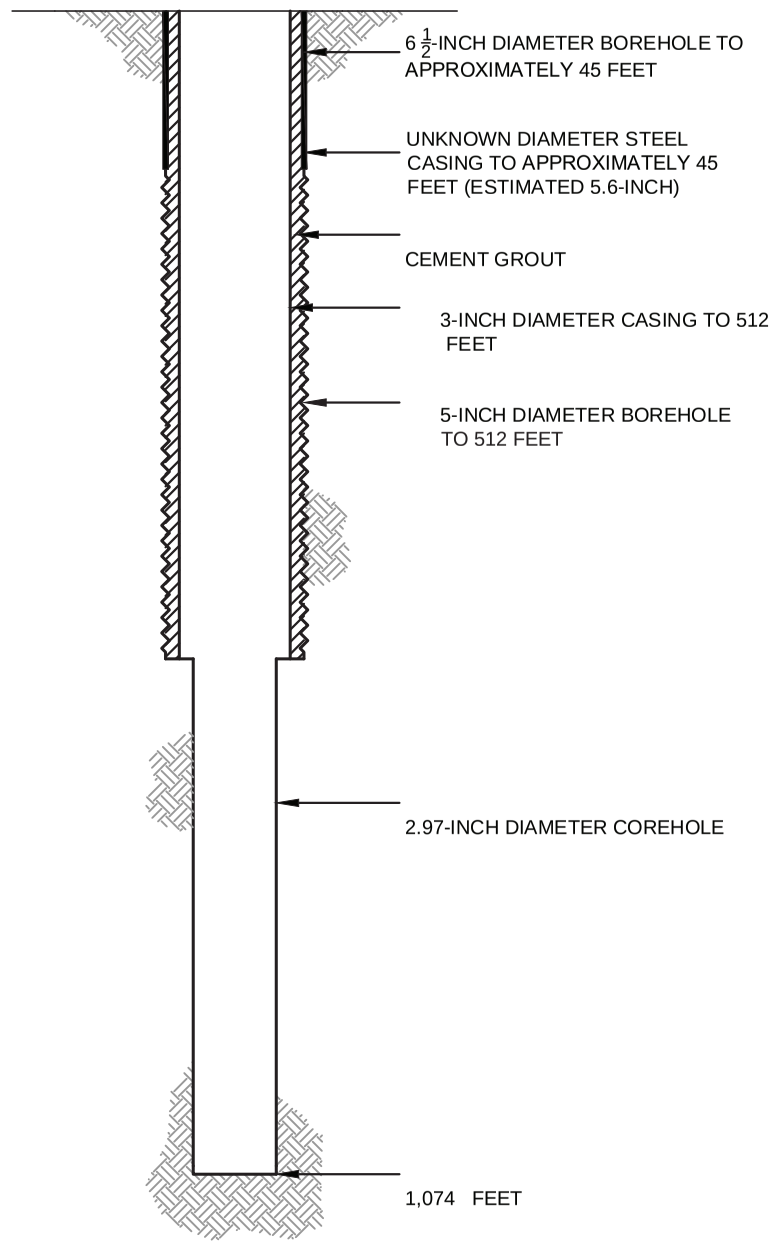

PROPOSED PLUGGING AND ABANDONMENT COREHOLE MCC533

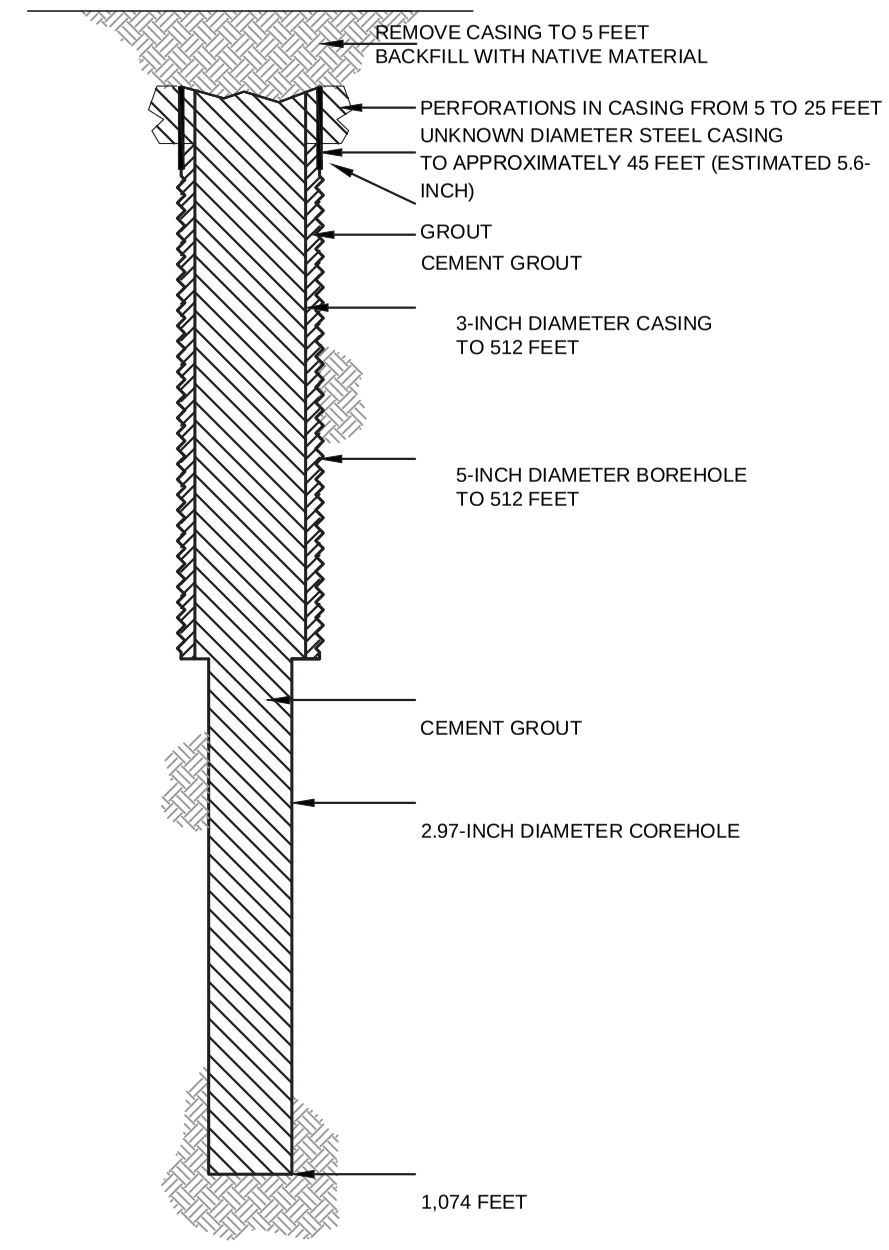

HALEY ALDRICH

FLORENCE COPPER, INC.
FLORENCE, ARIZONA

COREHOLE MCC533 DIAGRAM

FLORENCE COPPER INC.

NOT TO SCALE
SEPTEMBER 2019

FIGURE 1

MOBINI, GITA Printed: 4/21/2017 12:00 PM Layout: ABANDON (2)
\PROJECTS\CURIS RESOURCES38706-CURIS FEASIBILITY\DRAWINGS\EPA\WELL ABANDON\415S_ABANDON.DWG

OMB No. 2040-0042 Approval Expires 4/30/2022

United States Environmental Protection Agency

WELL REWORK RECORD, PLUGGING AND ABANDONMENT PLAN, OR PLUGGING AND ABANDONMENT AFFIDAVIT

Name and Address, Phone Number and/or Email of Permittee

Florence Copper Project
1575 W Hunt Hwy,
Florence, AZ 85132

Permit or EPA ID Number	API Number	Full Well Name
R9UIC-AZ3-FY11-1		MCC534

State	County
Arizona	Pinal

Locate well in two directions from nearest lines of quarter section and drilling unit

Latitude 33.04719348

Longitude -111.4291167

Surface Location

SW **1/4 of** SE **1/4 of Section** 28 **Township** 4S **Range** 9E

_____ **ft. from (N/S)** _____ **Line of quarter section**

_____ **ft. from (E/W)** _____ **Line of quarter section.**

Well Class	Timing of Action (pick one)	Type of Action (pick one)
☐ Class I ☐ Class II ☑ Class III ☐ Class V	☑ Notice Prior to Work Date Expected to Commence March 2021 ☐ Report After Work Date Work Ended	☐ Well Rework ☑ Plugging and Abandonment ☐ Conversion to a Non-Injection Well

Provide a narrative description of the work planned to be performed, or that was performed. Use additional pages as necessary. See instructions.

A workover rig capable of performing the required abandonment operations at the required depths will be moved in and set up over the core hole. The core hole will be inspected to determine the depth to which the hole remains open and if any obstructions are present in the core hole; the presence and condition of any existing collar will also be documented. If necessary, the core hole will be cleaned out to a depth of at least 100 feet below the bedrock-LBFU contact to enable placement of cement seals.

If collar is present, an attempt will be made to remove it. If removal of the collar is not feasible, it will be left in the hole and perforated as needed to allow an annular seal to be placed to a depth of at least 25 feet bgs. In areas of agricultural use, the surface casing will be cut at least 5 feet bgs and removed.

If the collar cannot be removed, it will be perforated from at least 20 feet below the bedrock-LBFU contact to at least 20 feet above the contact; from at least 20 feet below the base of the MFGU to at least 20 feet above the top of the MFGU; and from at least 25 feet bgs to 5 feet bgs.

A tremie pipe will be used to place Type V cement in the open core hole from the bottom of the core hole to the top of the core hole. Cement retainers, as described above, will be used to force cement grout into the annulus and behind perforated intervals, as necessary.

If the hole has been obstructed, as much cement as possible will be placed from 100 feet below the LBFU-bedrock contact to the top of the core hole.

The volume of Type V cement will be recorded and will not be less than the estimated volume of material required to fill each interval. All cement grout will consist of Type V cement, or equivalent approved in accordance with the UIC Permit.

Certification

I certify under the penalty of law that I have personally examined and am familiar with the information submitted in this document and all attachments and that, based on my inquiry of those individuals immediately responsible for obtaining the information, I believe that the information is true, accurate, and complete. I am aware that there are significant penalties for submitting false information, including the possibliity of fine and imprisonment. (Ref. 40 CFR § 144.32)

Name and Official Title *(Please type or print)*	Signature	Date Signed
Dan Johnson, VP - General Manager		10/3/2019

INSTRUCTIONS FOR FORM 7520-19

This form replaces forms 7520-12 and 7520-14. Use this form only when work is planned or has occurred that affects the well's construction or operation as an injection well, including work on the casing, tubing or packer (or for shallow Class V wells, the subsurface fluid emplacement network). Use one form per injection well. While reports or other information developed by contractors or service companies may be attached, this form must be signed by a responsible entity as described at 40 CFR 144.32. Note: operators closing Class V wells should use Form 7520-17.

NAME, ADDRESS, PHONE AND/OR EMAIL OF PERMITTEE: Enter the name and street address, city/town, state, and ZIP code of the permittee. Also provide an email address (if available) and/or a phone number.

PERMIT OR EPA ID NUMBER: Enter the well identification number or permit number assigned to the well by the EPA or the permitting authority.

API NUMBER: Enter the number assigned by the local jurisdiction (usually a State Oil and Gas Agency) using the American Petroleum Institute standard numbering system.

FULL WELL NAME: Enter the full name of the well or project.

Enter the **STATE** and **COUNTY** where the well is located. For States that do not have counties, use the name of that State's equivalent jurisdiction at a more local level.

WELL LOCATION: Fill in the complete township, range, and section to the nearest quarter-quarter section. A township is north or south of the baseline, and a range is east or west of the principal meridian (e.g., T12N, R34W). Also include the distance, in feet, from the nearest north or south line and nearest east or west line of the quarter-section. Also, enter the **latitude** and **longitude** of the well in decimal degrees, to five or six places if possible; be sure to include a negative sign for the longitude of a well in the Western Hemisphere and a negative sign for the latitude of a well in the Southern Hemisphere.

Enter the **WELL CLASS,** i.e., the class of injection well as defined in 40 CFR 144.6.

TIMING OF THE ACTION: Check ***Notice prior to work*** if the activity has not yet occurred (i.e., is planned). Check ***Report after work*** if the activity described has already occurred. As appropriate, include the date the activity is expected to start or the date the activity was completed. (Note this may not be available, e.g., for a plugging plan submitted with a permit application.)

TYPE OF ACTION: Check the appropriate box to describe the kind of activity being reported. Check ***Well Rework*** for work that was/will be performed on the well after it has already been in operation as an injection well. Check ***Plugging and Abandonment*** to report on plans for or descriptions of final closure/plugging after use as an injection well. Check ***Conversion to a Non-Injection Well*** if the well is to be converted to something other than an injection well.

Provide a **NARRATIVE DESCRIPTION** of the work planned to be performed, or that was performed. The narrative should include a description of the main procedures planned or that occurred during the work activity. A service company report, daily report, or similar document may be attached if it includes all the requested information and is clear and legible.

For well reworks, include the following information: The reason for the well rework; depths of activity; type of activity; changes to injection well configuration, well casing, or cement behind casing; any plug added to the well and its depth; any newly drilled interval and its depth; method(s) to demonstrate that the well has mechanical integrity (as applicable); and any deviations from the approved rework plan (as applicable).

For a well plugging plan, include the following information: Reason for the well plugging; number of plugs placed, and their depths; materials used as plugs (e.g., cast iron bridge plug, cement, cement retainer); method to set plugs; and wait-on-cement times, if any. Also provide one or more cost estimates from an independent firm in the business of plugging and abandoning wells to plug the well as described in the plan.

For well plugging affidavit, include the following information: Reason for the well plugging; number of plugs placed, and their depths; materials used as plugs (e.g., cast iron bridge plug, cement, cement retainer); method to set plugs; wait-on-cement times, if any; and any deviations from the approved plugging plan (if applicable).

For conversion to a non-injection well, include the following information: Depths of activity; type of activity; changes to injection well configuration, well casing, or cement behind casing; any plug added to the well and its depth; any newly drilled interval and its depth; depths of new perforations; and method(s) to demonstrate that the well has mechanical integrity (as applicable).

For all of the above activities, include a well sketch depicting the work, results of well tests/logging performed, service company tickets, and any other available information demonstrating how the work was/is to be performed. Also, specify whether depths are below ground surface, relative to Kelly bushing, etc.

CERTIFICATION: This form must be signed and dated by either: a responsible corporate officer for a corporation, by a general partner for a partnership, by the proprietor of a sole proprietorship, or by a principal executive or ranking elected official for a public agency.

PAPERWORK REDUCTION ACT NOTICE: The public reporting and recordkeeping burden for this collection of information is estimated to average between 6.0 and 7.9 hours per response, depending on the injection well class. Burden means the total time, effort, or financial resource expended by persons to generate, maintain, retain, or disclose or provide information to or for a Federal Agency. This includes the time needed to review instructions; develop, acquire, install, and utilize technology and systems for the purposes of collecting, validating, and verifying information, processing and maintaining information, and disclosing and providing information; adjust the existing ways to comply with any previously applicable instructions and requirements; train personnel to be able to respond to the collection of information; search data sources; complete and review the collection of information; and, transmit or otherwise disclose the information. An agency may not conduct or sponsor, and a person is not required to respond to, a collection of information unless it displays a currently valid OMB control number. Send comments on the Agency's need for this information, the accuracy of the provided burden estimates, and any suggested methods for minimizing respondent burden, including the use of automated collection techniques to Director, Collection Strategies Division, U.S. Environmental Protection Agency (2822), 1200 Pennsylvania Ave., NW., Washington, D.C. 20460. Include the OMB control number in any correspondence. Do not send the completed forms to this address.

AS-BUILT COREHOLE MCC534

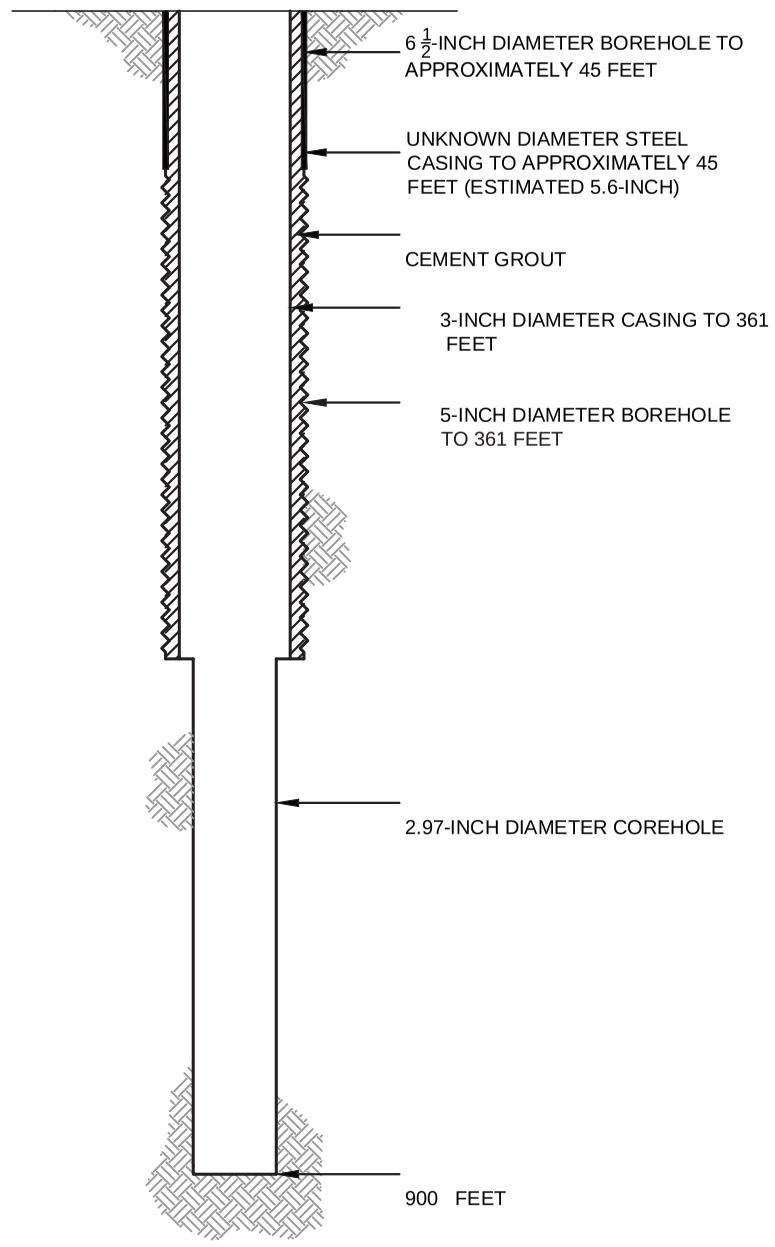

PROPOSED PLUGGING AND ABANDONMENT COREHOLE MCC534

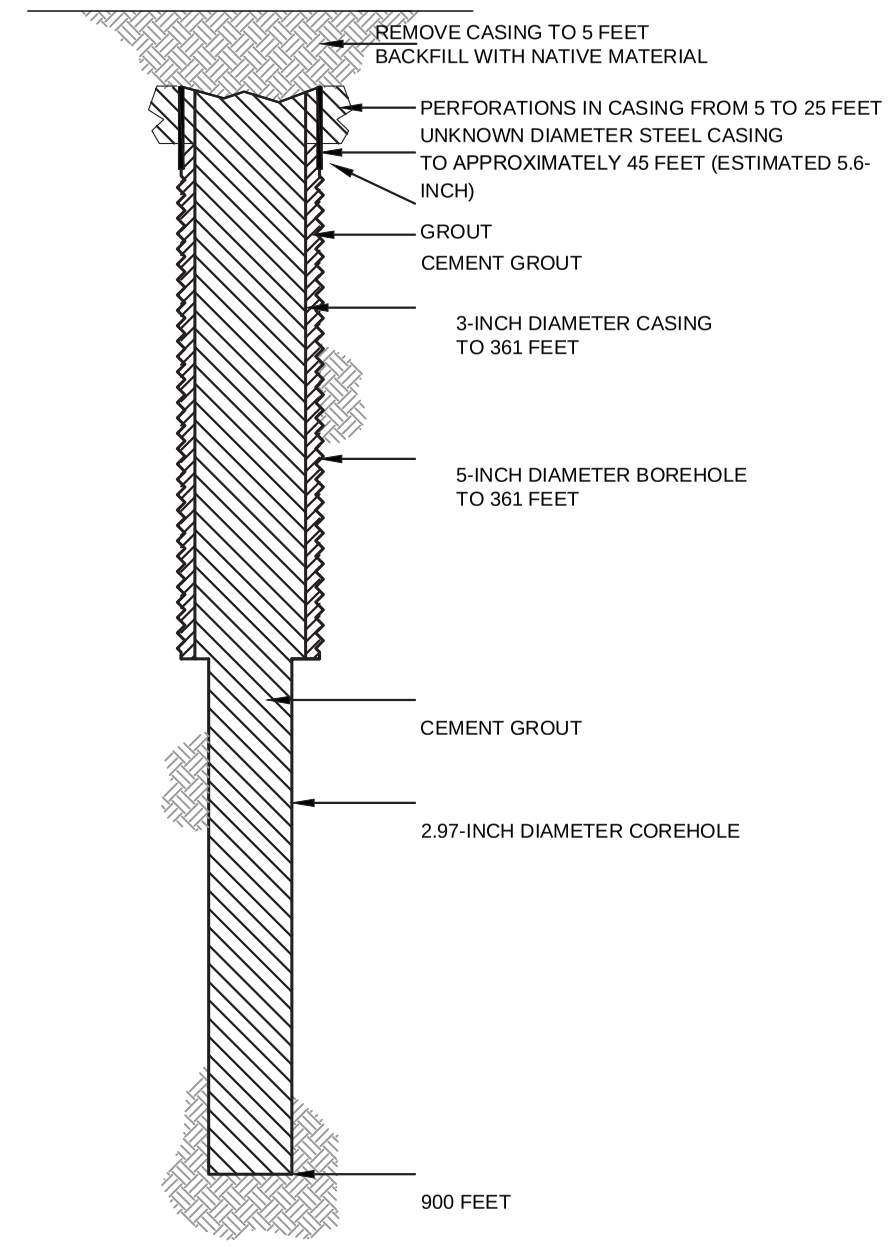

HALEY ALDRICH

FLORENCE COPPER, INC.
FLORENCE, ARIZONA

COREHOLE MCC534 DIAGRAM

FLORENCE COPPER INC.

NOT TO SCALE
SEPTEMBER 2019

FIGURE 1

MOBINI, GITA Printed: 4/21/2017 12:00 PM Layout: ABANDON (2)
\PROJECTS\CURIS RESOURCES38706-CURIS FEASIBILITY\DRAWINGS\EPA\WELL ABANDON\415S_ABANDON.DWG

OMB No. 2040-0042 Approval Expires 4/30/2022

United States Environmental Protection Agency

WELL REWORK RECORD, PLUGGING AND ABANDONMENT PLAN, OR PLUGGING AND ABANDONMENT AFFIDAVIT

Name and Address, Phone Number and/or Email of Permittee

Florence Copper Project
1575 W Hunt Hwy,
Florence, AZ 85132

Permit or EPA ID Number	API Number	Full Well Name
R9UIC-AZ3-FY11-1		MCC536

State	County
Arizona	Pinal

Locate well in two directions from nearest lines of quarter section and drilling unit

Surface Location

SE 1/4 of SW 1/4 of Section 28 Township 4S Range 9E

Latitude 33.04908843

Longitude -111.4337229

ft. from (N/S) Line of quarter section

ft. from (E/W) Line of quarter section.

Well Class	Timing of Action (pick one)	Type of Action (pick one)
☐ Class I ☐ Class II ☑ Class III ☐ Class V	☑ Notice Prior to Work Date Expected to Commence March 2021 ☐ Report After Work Date Work Ended	☐ Well Rework ☑ Plugging and Abandonment ☐ Conversion to a Non-Injection Well

Provide a narrative description of the work planned to be performed, or that was performed. Use additional pages as necessary. See instructions.

A workover rig capable of performing the required abandonment operations at the required depths will be moved in and set up over the core hole. The core hole will be inspected to determine the depth to which the hole remains open and if any obstructions are present in the core hole; the presence and condition of any existing collar will also be documented. If necessary, the core hole will be cleaned out to a depth of at least 100 feet below the bedrock-LBFU contact to enable placement of cement seals.

If collar is present, an attempt will be made to remove it. If removal of the collar is not feasible, it will be left in the hole and perforated as needed to allow an annular seal to be placed to a depth of at least 25 feet bgs. In areas of agricultural use, the surface casing will be cut at least 5 feet bgs and removed.

If the collar cannot be removed, it will be perforated from at least 20 feet below the bedrock-LBFU contact to at least 20 feet above the contact; from at least 20 feet below the base of the MFGU to at least 20 feet above the top of the MFGU; and from at least 25 feet bgs to 5 feet bgs.

A tremie pipe will be used to place Type V cement in the open core hole from the bottom of the core hole to the top of the core hole. Cement retainers, as described above, will be used to force cement grout into the annulus and behind perforated intervals, as necessary.

If the hole has been obstructed, as much cement as possible will be placed from 100 feet below the LBFU-bedrock contact to the top of the core hole.

The volume of Type V cement will be recorded and will not be less than the estimated volume of material required to fill each interval. All cement grout will consist of Type V cement, or equivalent approved in accordance with the UIC Permit.

Certification

I certify under the penalty of law that I have personally examined and am familiar with the information submitted in this document and all attachments and that, based on my inquiry of those individuals immediately responsible for obtaining the information, I believe that the information is true, accurate, and complete. I am aware that there are significant penalties for submitting false information, including the possibliity of fine and imprisonment. (Ref. 40 CFR § 144.32)

Name and Official Title *(Please type or print)*	Signature	Date Signed
Dan Johnson, VP - General Manager		10/3/2019

INSTRUCTIONS FOR FORM 7520-19

This form replaces forms 7520-12 and 7520-14. Use this form only when work is planned or has occurred that affects the well's construction or operation as an injection well, including work on the casing, tubing or packer (or for shallow Class V wells, the subsurface fluid emplacement network). Use one form per injection well. While reports or other information developed by contractors or service companies may be attached, this form must be signed by a responsible entity as described at 40 CFR 144.32. Note: operators closing Class V wells should use Form 7520-17.

NAME, ADDRESS, PHONE AND/OR EMAIL OF PERMITTEE: Enter the name and street address, city/town, state, and ZIP code of the permittee. Also provide an email address (if available) and/or a phone number.

PERMIT OR EPA ID NUMBER: Enter the well identification number or permit number assigned to the well by the EPA or the permitting authority.

API NUMBER: Enter the number assigned by the local jurisdiction (usually a State Oil and Gas Agency) using the American Petroleum Institute standard numbering system.

FULL WELL NAME: Enter the full name of the well or project.

Enter the **STATE** and **COUNTY** where the well is located. For States that do not have counties, use the name of that State's equivalent jurisdiction at a more local level.

WELL LOCATION: Fill in the complete township, range, and section to the nearest quarter-quarter section. A township is north or south of the baseline, and a range is east or west of the principal meridian (e.g., T12N, R34W). Also include the distance, in feet, from the nearest north or south line and nearest east or west line of the quarter-section. Also, enter the **latitude** and **longitude** of the well in decimal degrees, to five or six places if possible; be sure to include a negative sign for the longitude of a well in the Western Hemisphere and a negative sign for the latitude of a well in the Southern Hemisphere.

Enter the **WELL CLASS,** i.e., the class of injection well as defined in 40 CFR 144.6.

TIMING OF THE ACTION: Check ***Notice prior to work*** if the activity has not yet occurred (i.e., is planned). Check ***Report after work*** if the activity described has already occurred. As appropriate, include the date the activity is expected to start or the date the activity was completed. (Note this may not be available, e.g., for a plugging plan submitted with a permit application.)

TYPE OF ACTION: Check the appropriate box to describe the kind of activity being reported. Check ***Well Rework*** for work that was/will be performed on the well after it has already been in operation as an injection well. Check ***Plugging and Abandonment*** to report on plans for or descriptions of final closure/plugging after use as an injection well. Check ***Conversion to a Non-Injection Well*** if the well is to be converted to something other than an injection well.

Provide a **NARRATIVE DESCRIPTION** of the work planned to be performed, or that was performed. The narrative should include a description of the main procedures planned or that occurred during the work activity. A service company report, daily report, or similar document may be attached if it includes all the requested information and is clear and legible.

For well reworks, include the following information: The reason for the well rework; depths of activity; type of activity; changes to injection well configuration, well casing, or cement behind casing; any plug added to the well and its depth; any newly drilled interval and its depth; method(s) to demonstrate that the well has mechanical integrity (as applicable); and any deviations from the approved rework plan (as applicable).

For a well plugging plan, include the following information: Reason for the well plugging; number of plugs placed, and their depths; materials used as plugs (e.g., cast iron bridge plug, cement, cement retainer); method to set plugs; and wait-on-cement times, if any. Also provide one or more cost estimates from an independent firm in the business of plugging and abandoning wells to plug the well as described in the plan.

For well plugging affidavit, include the following information: Reason for the well plugging; number of plugs placed, and their depths; materials used as plugs (e.g., cast iron bridge plug, cement, cement retainer); method to set plugs; wait-on-cement times, if any; and any deviations from the approved plugging plan (if applicable).

For conversion to a non-injection well, include the following information: Depths of activity; type of activity; changes to injection well configuration, well casing, or cement behind casing; any plug added to the well and its depth; any newly drilled interval and its depth; depths of new perforations; and method(s) to demonstrate that the well has mechanical integrity (as applicable).

For all of the above activities, include a well sketch depicting the work, results of well tests/logging performed, service company tickets, and any other available information demonstrating how the work was/is to be performed. Also, specify whether depths are below ground surface, relative to Kelly bushing, etc.

CERTIFICATION: This form must be signed and dated by either: a responsible corporate officer for a corporation, by a general partner for a partnership, by the proprietor of a sole proprietorship, or by a principal executive or ranking elected official for a public agency.

PAPERWORK REDUCTION ACT NOTICE: The public reporting and recordkeeping burden for this collection of information is estimated to average between 6.0 and 7.9 hours per response, depending on the injection well class. Burden means the total time, effort, or financial resource expended by persons to generate, maintain, retain, or disclose or provide information to or for a Federal Agency. This includes the time needed to review instructions; develop, acquire, install, and utilize technology and systems for the purposes of collecting, validating, and verifying information, processing and maintaining information, and disclosing and providing information; adjust the existing ways to comply with any previously applicable instructions and requirements; train personnel to be able to respond to the collection of information; search data sources; complete and review the collection of information; and, transmit or otherwise disclose the information. An agency may not conduct or sponsor, and a person is not required to respond to, a collection of information unless it displays a currently valid OMB control number. Send comments on the Agency's need for this information, the accuracy of the provided burden estimates, and any suggested methods for minimizing respondent burden, including the use of automated collection techniques to Director, Collection Strategies Division, U.S. Environmental Protection Agency (2822), 1200 Pennsylvania Ave., NW., Washington, D.C. 20460. Include the OMB control number in any correspondence. Do not send the completed forms to this address.

AS-BUILT COREHOLE MCC536

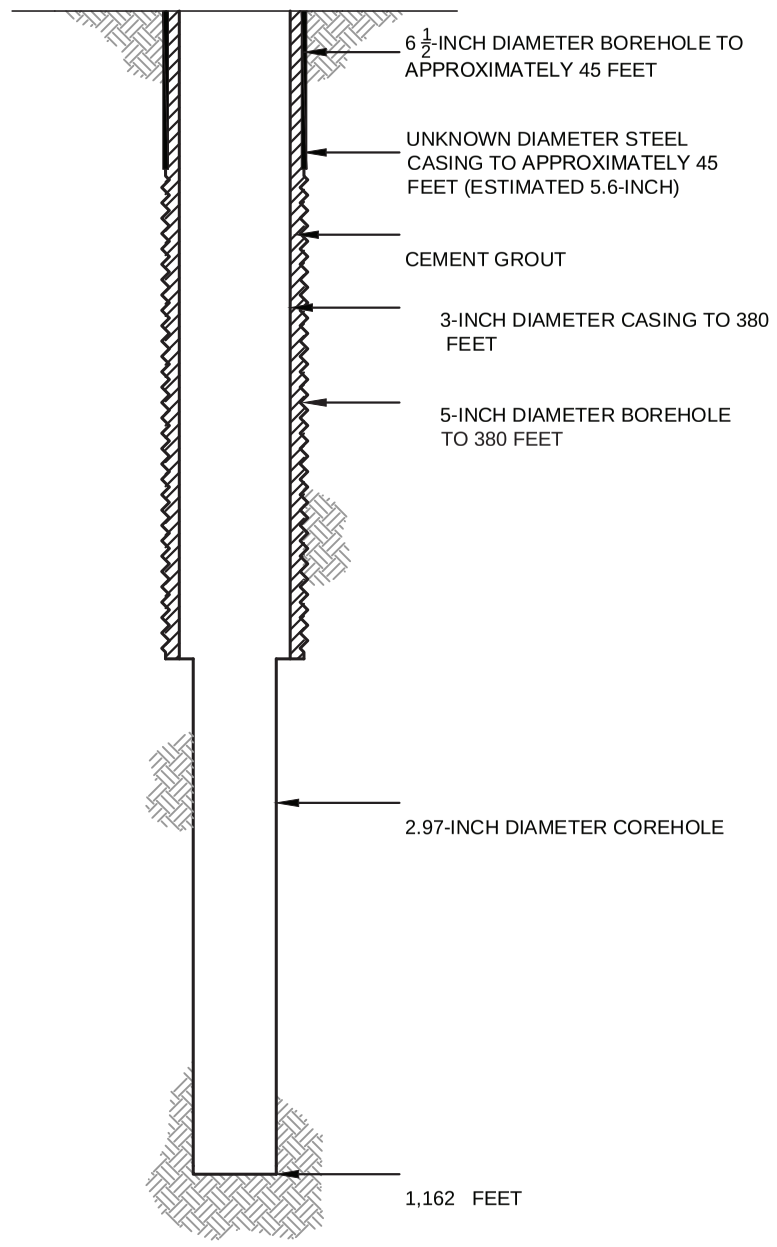

PROPOSED PLUGGING AND ABANDONMENT COREHOLE MCC536

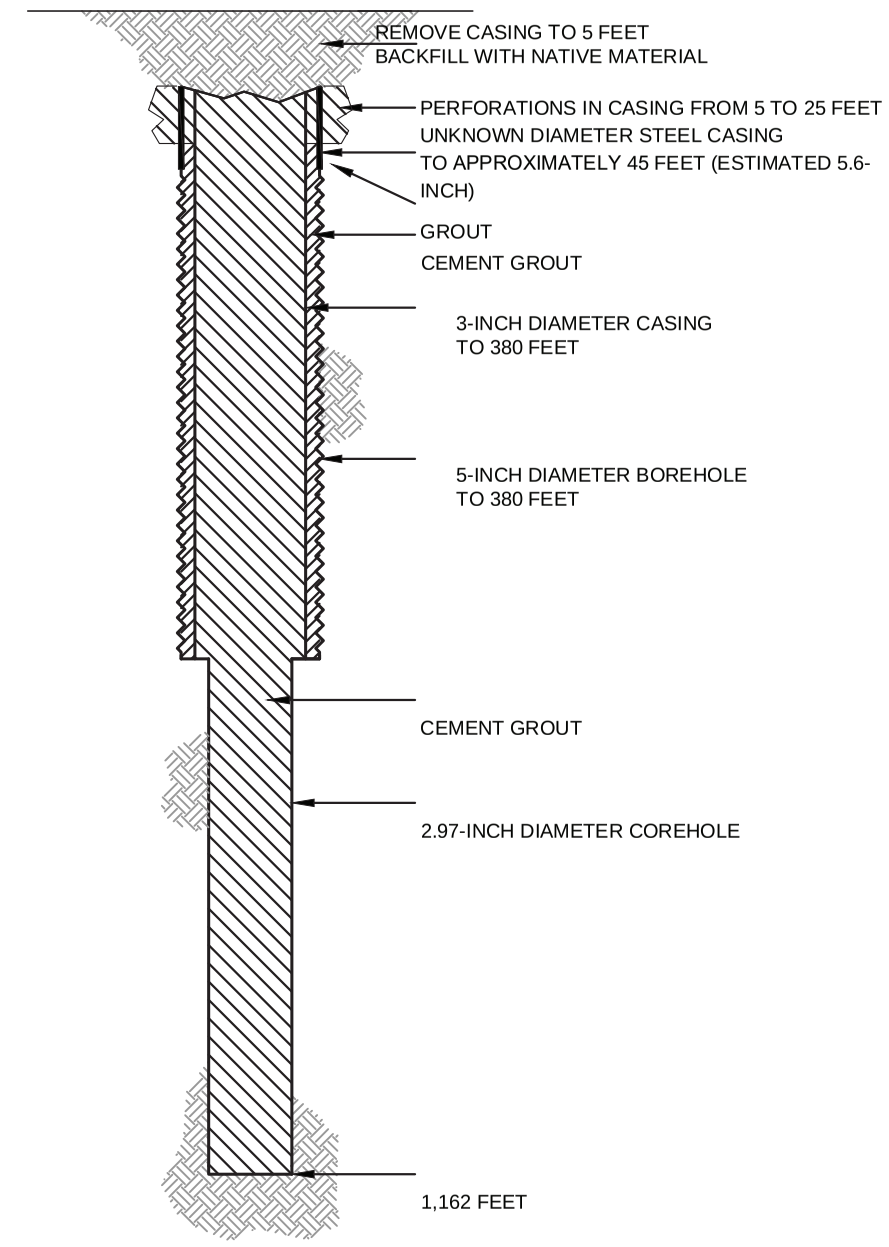

HALEY ALDRICH

FLORENCE COPPER, INC.
FLORENCE, ARIZONA

COREHOLE MCC536 DIAGRAM

FLORENCE COPPER INC.

NOT TO SCALE
SEPTEMBER 2019

FIGURE 1

MOBINI, GITA Printed: 4/21/2017 12:00 PM Layout: ABANDON (2)
\PROJECTS\CURIS RESOURCES38706-CURIS FEASIBILITY\DRAWINGS\EPA\WELL ABANDON\415S_ABANDON.DWG

OMB No. 2040-0042 Approval Expires 4/30/2022

United States Environmental Protection Agency

WELL REWORK RECORD, PLUGGING AND ABANDONMENT PLAN, OR PLUGGING AND ABANDONMENT AFFIDAVIT

Name and Address, Phone Number and/or Email of Permittee

Florence Copper Project
1575 W Hunt Hwy,
Florence, AZ 85132

Permit or EPA ID Number	API Number	Full Well Name
R9UIC-AZ3-FY11-1		MCC537

State	County
Arizona	Pinal

Locate well in two directions from nearest lines of quarter section and drilling unit

Latitude 33.04823114

Longitude -111.4334391

Surface Location

SE **1/4 of** SW **1/4 of Section** 28 **Township** 4S **Range** 9E

_____ **ft. from (N/S)** _____ **Line of quarter section**

_____ **ft. from (E/W)** _____ **Line of quarter section.**

Well Class	Timing of Action (pick one)	Type of Action (pick one)
☐ Class I ☐ Class II ☑ Class III ☐ Class V	☑ Notice Prior to Work Date Expected to Commence March 2021 ☐ Report After Work Date Work Ended	☐ Well Rework ☑ Plugging and Abandonment ☐ Conversion to a Non-Injection Well

Provide a narrative description of the work planned to be performed, or that was performed. Use additional pages as necessary. See instructions.

A workover rig capable of performing the required abandonment operations at the required depths will be moved in and set up over the core hole. The core hole will be inspected to determine the depth to which the hole remains open and if any obstructions are present in the core hole; the presence and condition of any existing collar will also be documented. If necessary, the core hole will be cleaned out to a depth of at least 100 feet below the bedrock-LBFU contact to enable placement of cement seals.

If collar is present, an attempt will be made to remove it. If removal of the collar is not feasible, it will be left in the hole and perforated as needed to allow an annular seal to be placed to a depth of at least 25 feet bgs. In areas of agricultural use, the surface casing will be cut at least 5 feet bgs and removed.

If the collar cannot be removed, it will be perforated from at least 20 feet below the bedrock-LBFU contact to at least 20 feet above the contact; from at least 20 feet below the base of the MFGU to at least 20 feet above the top of the MFGU; and from at least 25 feet bgs to 5 feet bgs.

A tremie pipe will be used to place Type V cement in the open core hole from the bottom of the core hole to the top of the core hole. Cement retainers, as described above, will be used to force cement grout into the annulus and behind perforated intervals, as necessary.

If the hole has been obstructed, as much cement as possible will be placed from 100 feet below the LBFU-bedrock contact to the top of the core hole.

The volume of Type V cement will be recorded and will not be less than the estimated volume of material required to fill each interval. All cement grout will consist of Type V cement, or equivalent approved in accordance with the UIC Permit.

Certification

I certify under the penalty of law that I have personally examined and am familiar with the information submitted in this document and all attachments and that, based on my inquiry of those individuals immediately responsible for obtaining the information, I believe that the information is true, accurate, and complete. I am aware that there are significant penalties for submitting false information, including the possibliity of fine and imprisonment. (Ref. 40 CFR § 144.32)

Name and Official Title *(Please type or print)*	Signature	Date Signed
Dan Johnson, VP - General Manager		10/3/2019

INSTRUCTIONS FOR FORM 7520-19

This form replaces forms 7520-12 and 7520-14. Use this form only when work is planned or has occurred that affects the well's construction or operation as an injection well, including work on the casing, tubing or packer (or for shallow Class V wells, the subsurface fluid emplacement network). Use one form per injection well. While reports or other information developed by contractors or service companies may be attached, this form must be signed by a responsible entity as described at 40 CFR 144.32. Note: operators closing Class V wells should use Form 7520-17.

NAME, ADDRESS, PHONE AND/OR EMAIL OF PERMITTEE: Enter the name and street address, city/town, state, and ZIP code of the permittee. Also provide an email address (if available) and/or a phone number.

PERMIT OR EPA ID NUMBER: Enter the well identification number or permit number assigned to the well by the EPA or the permitting authority.

API NUMBER: Enter the number assigned by the local jurisdiction (usually a State Oil and Gas Agency) using the American Petroleum Institute standard numbering system.

FULL WELL NAME: Enter the full name of the well or project.

Enter the **STATE** and **COUNTY** where the well is located. For States that do not have counties, use the name of that State's equivalent jurisdiction at a more local level.

WELL LOCATION: Fill in the complete township, range, and section to the nearest quarter-quarter section. A township is north or south of the baseline, and a range is east or west of the principal meridian (e.g., T12N, R34W). Also include the distance, in feet, from the nearest north or south line and nearest east or west line of the quarter-section. Also, enter the **latitude** and **longitude** of the well in decimal degrees, to five or six places if possible; be sure to include a negative sign for the longitude of a well in the Western Hemisphere and a negative sign for the latitude of a well in the Southern Hemisphere.

Enter the **WELL CLASS,** i.e., the class of injection well as defined in 40 CFR 144.6.

TIMING OF THE ACTION: Check ***Notice prior to work*** if the activity has not yet occurred (i.e., is planned). Check ***Report after work*** if the activity described has already occurred. As appropriate, include the date the activity is expected to start or the date the activity was completed. (Note this may not be available, e.g., for a plugging plan submitted with a permit application.)

TYPE OF ACTION: Check the appropriate box to describe the kind of activity being reported. Check ***Well Rework*** for work that was/will be performed on the well after it has already been in operation as an injection well. Check ***Plugging and Abandonment*** to report on plans for or descriptions of final closure/plugging after use as an injection well. Check ***Conversion to a Non-Injection Well*** if the well is to be converted to something other than an injection well.

Provide a **NARRATIVE DESCRIPTION** of the work planned to be performed, or that was performed. The narrative should include a description of the main procedures planned or that occurred during the work activity. A service company report, daily report, or similar document may be attached if it includes all the requested information and is clear and legible.

For well reworks, include the following information: The reason for the well rework; depths of activity; type of activity; changes to injection well configuration, well casing, or cement behind casing; any plug added to the well and its depth; any newly drilled interval and its depth; method(s) to demonstrate that the well has mechanical integrity (as applicable); and any deviations from the approved rework plan (as applicable).

For a well plugging plan, include the following information: Reason for the well plugging; number of plugs placed, and their depths; materials used as plugs (e.g., cast iron bridge plug, cement, cement retainer); method to set plugs; and wait-on-cement times, if any. Also provide one or more cost estimates from an independent firm in the business of plugging and abandoning wells to plug the well as described in the plan.

For well plugging affidavit, include the following information: Reason for the well plugging; number of plugs placed, and their depths; materials used as plugs (e.g., cast iron bridge plug, cement, cement retainer); method to set plugs; wait-on-cement times, if any; and any deviations from the approved plugging plan (if applicable).

For conversion to a non-injection well, include the following information: Depths of activity; type of activity; changes to injection well configuration, well casing, or cement behind casing; any plug added to the well and its depth; any newly drilled interval and its depth; depths of new perforations; and method(s) to demonstrate that the well has mechanical integrity (as applicable).

For all of the above activities, include a well sketch depicting the work, results of well tests/logging performed, service company tickets, and any other available information demonstrating how the work was/is to be performed. Also, specify whether depths are below ground surface, relative to Kelly bushing, etc.

CERTIFICATION: This form must be signed and dated by either: a responsible corporate officer for a corporation, by a general partner for a partnership, by the proprietor of a sole proprietorship, or by a principal executive or ranking elected official for a public agency.

PAPERWORK REDUCTION ACT NOTICE: The public reporting and recordkeeping burden for this collection of information is estimated to average between 6.0 and 7.9 hours per response, depending on the injection well class. Burden means the total time, effort, or financial resource expended by persons to generate, maintain, retain, or disclose or provide information to or for a Federal Agency. This includes the time needed to review instructions; develop, acquire, install, and utilize technology and systems for the purposes of collecting, validating, and verifying information, processing and maintaining information, and disclosing and providing information; adjust the existing ways to comply with any previously applicable instructions and requirements; train personnel to be able to respond to the collection of information; search data sources; complete and review the collection of information; and, transmit or otherwise disclose the information. An agency may not conduct or sponsor, and a person is not required to respond to, a collection of information unless it displays a currently valid OMB control number. Send comments on the Agency's need for this information, the accuracy of the provided burden estimates, and any suggested methods for minimizing respondent burden, including the use of automated collection techniques to Director, Collection Strategies Division, U.S. Environmental Protection Agency (2822), 1200 Pennsylvania Ave., NW., Washington, D.C. 20460. Include the OMB control number in any correspondence. Do not send the completed forms to this address.

AS-BUILT COREHOLE MCC537

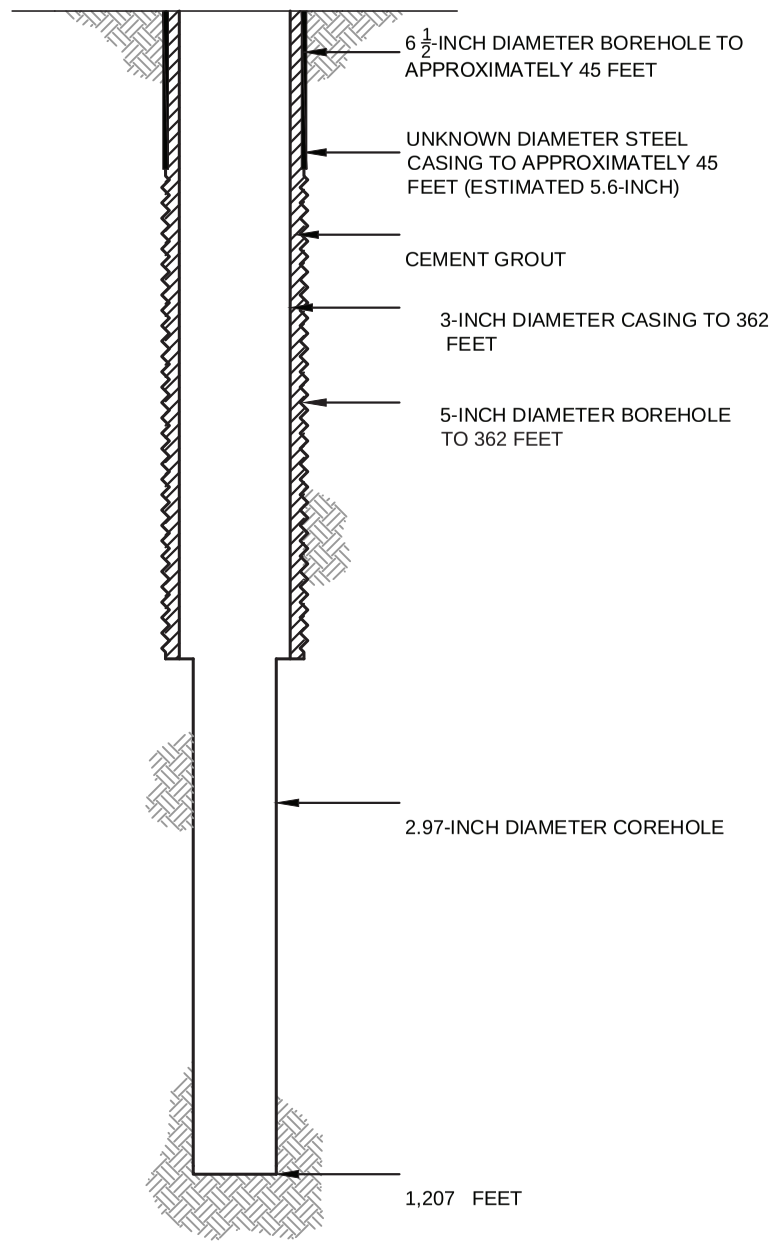

PROPOSED PLUGGING AND ABANDONMENT COREHOLE MCC537

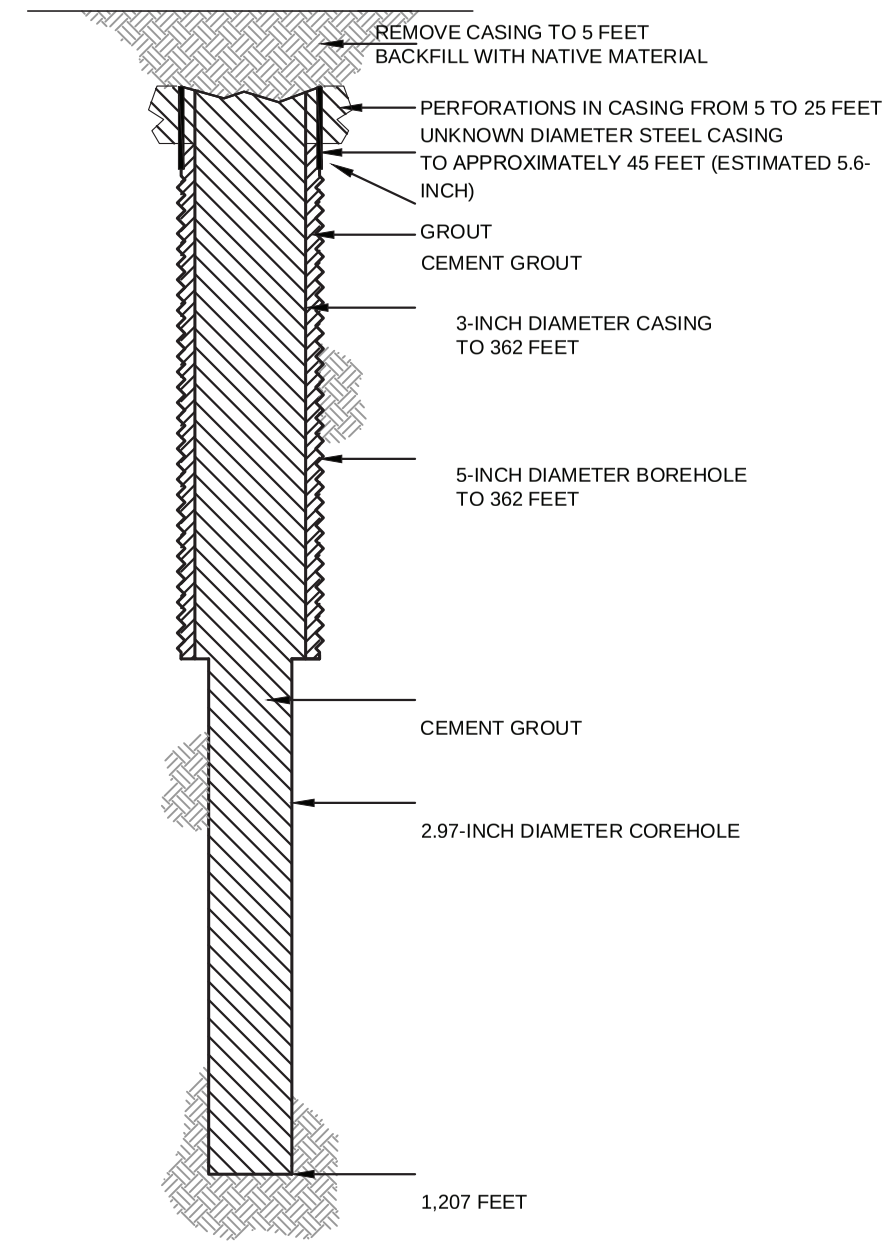

HALEY ALDRICH

FLORENCE COPPER, INC.
FLORENCE, ARIZONA

COREHOLE MCC537 DIAGRAM

FLORENCE COPPER INC.

NOT TO SCALE
SEPTEMBER 2019

FIGURE 1

MOBINI, GITA Printed: 4/21/2017 12:00 PM Layout: ABANDON (2)
\PROJECTS\CURIS RESOURCES38706-CURIS FEASIBILITY\DRAWINGS\EPA\WELL ABANDON\415S_ABANDON.DWG

OMB No. 2040-0042 Approval Expires 4/30/2022

United States Environmental Protection Agency

WELL REWORK RECORD, PLUGGING AND ABANDONMENT PLAN, OR PLUGGING AND ABANDONMENT AFFIDAVIT

Name and Address, Phone Number and/or Email of Permittee

Florence Copper Project
1575 W Hunt Hwy,
Florence, AZ 85132

Permit or EPA ID Number	API Number	Full Well Name
R9UIC-AZ3-FY11-1		MCC538

State	County
Arizona	Pinal

Locate well in two directions from nearest lines of quarter section and drilling unit

Surface Location

SE 1/4 of SW 1/4 of Section 28 Township 4S Range 9E

Latitude 33.04858769

Longitude -111.4334531

_____ ft. from (N/S) _____ Line of quarter section

_____ ft. from (E/W) _____ Line of quarter section.

Well Class	Timing of Action (pick one)	Type of Action (pick one)
☐ Class I ☐ Class II ☑ Class III ☐ Class V	☑ Notice Prior to Work Date Expected to Commence March 2021 ☐ Report After Work Date Work Ended	☐ Well Rework ☑ Plugging and Abandonment ☐ Conversion to a Non-Injection Well

Provide a narrative description of the work planned to be performed, or that was performed. Use additional pages as necessary. See instructions.

A workover rig capable of performing the required abandonment operations at the required depths will be moved in and set up over the core hole. The core hole will be inspected to determine the depth to which the hole remains open and if any obstructions are present in the core hole; the presence and condition of any existing collar will also be documented. If necessary, the core hole will be cleaned out to a depth of at least 100 feet below the bedrock-LBFU contact to enable placement of cement seals.

If collar is present, an attempt will be made to remove it. If removal of the collar is not feasible, it will be left in the hole and perforated as needed to allow an annular seal to be placed to a depth of at least 25 feet bgs. In areas of agricultural use, the surface casing will be cut at least 5 feet bgs and removed.

If the collar cannot be removed, it will be perforated from at least 20 feet below the bedrock-LBFU contact to at least 20 feet above the contact; from at least 20 feet below the base of the MFGU to at least 20 feet above the top of the MFGU; and from at least 25 feet bgs to 5 feet bgs.

A tremie pipe will be used to place Type V cement in the open core hole from the bottom of the core hole to the top of the core hole. Cement retainers, as described above, will be used to force cement grout into the annulus and behind perforated intervals, as necessary.

If the hole has been obstructed, as much cement as possible will be placed from 100 feet below the LBFU-bedrock contact to the top of the core hole.

The volume of Type V cement will be recorded and will not be less than the estimated volume of material required to fill each interval. All cement grout will consist of Type V cement, or equivalent approved in accordance with the UIC Permit.

Certification

I certify under the penalty of law that I have personally examined and am familiar with the information submitted in this document and all attachments and that, based on my inquiry of those individuals immediately responsible for obtaining the information, I believe that the information is true, accurate, and complete. I am aware that there are significant penalties for submitting false information, including the possibliity of fine and imprisonment. (Ref. 40 CFR § 144.32)

Name and Official Title *(Please type or print)*	Signature	Date Signed
Dan Johnson, VP - General Manager		10/3/2019

INSTRUCTIONS FOR FORM 7520-19

This form replaces forms 7520-12 and 7520-14. Use this form only when work is planned or has occurred that affects the well's construction or operation as an injection well, including work on the casing, tubing or packer (or for shallow Class V wells, the subsurface fluid emplacement network). Use one form per injection well. While reports or other information developed by contractors or service companies may be attached, this form must be signed by a responsible entity as described at 40 CFR 144.32. Note: operators closing Class V wells should use Form 7520-17.

NAME, ADDRESS, PHONE AND/OR EMAIL OF PERMITTEE: Enter the name and street address, city/town, state, and ZIP code of the permittee. Also provide an email address (if available) and/or a phone number.

PERMIT OR EPA ID NUMBER: Enter the well identification number or permit number assigned to the well by the EPA or the permitting authority.

API NUMBER: Enter the number assigned by the local jurisdiction (usually a State Oil and Gas Agency) using the American Petroleum Institute standard numbering system.

FULL WELL NAME: Enter the full name of the well or project.

Enter the **STATE** and **COUNTY** where the well is located. For States that do not have counties, use the name of that State's equivalent jurisdiction at a more local level.

WELL LOCATION: Fill in the complete township, range, and section to the nearest quarter-quarter section. A township is north or south of the baseline, and a range is east or west of the principal meridian (e.g., T12N, R34W). Also include the distance, in feet, from the nearest north or south line and nearest east or west line of the quarter-section. Also, enter the **latitude** and **longitude** of the well in decimal degrees, to five or six places if possible; be sure to include a negative sign for the longitude of a well in the Western Hemisphere and a negative sign for the latitude of a well in the Southern Hemisphere.

Enter the **WELL CLASS,** i.e., the class of injection well as defined in 40 CFR 144.6.

TIMING OF THE ACTION: Check ***Notice prior to work*** if the activity has not yet occurred (i.e., is planned). Check ***Report after work*** if the activity described has already occurred. As appropriate, include the date the activity is expected to start or the date the activity was completed. (Note this may not be available, e.g., for a plugging plan submitted with a permit application.)

TYPE OF ACTION: Check the appropriate box to describe the kind of activity being reported. Check ***Well Rework*** for work that was/will be performed on the well after it has already been in operation as an injection well. Check ***Plugging and Abandonment*** to report on plans for or descriptions of final closure/plugging after use as an injection well. Check ***Conversion to a Non-Injection Well*** if the well is to be converted to something other than an injection well.

Provide a **NARRATIVE DESCRIPTION** of the work planned to be performed, or that was performed. The narrative should include a description of the main procedures planned or that occurred during the work activity. A service company report, daily report, or similar document may be attached if it includes all the requested information and is clear and legible.

For well reworks, include the following information: The reason for the well rework; depths of activity; type of activity; changes to injection well configuration, well casing, or cement behind casing; any plug added to the well and its depth; any newly drilled interval and its depth; method(s) to demonstrate that the well has mechanical integrity (as applicable); and any deviations from the approved rework plan (as applicable).

For a well plugging plan, include the following information: Reason for the well plugging; number of plugs placed, and their depths; materials used as plugs (e.g., cast iron bridge plug, cement, cement retainer); method to set plugs; and wait-on-cement times, if any. Also provide one or more cost estimates from an independent firm in the business of plugging and abandoning wells to plug the well as described in the plan.

For well plugging affidavit, include the following information: Reason for the well plugging; number of plugs placed, and their depths; materials used as plugs (e.g., cast iron bridge plug, cement, cement retainer); method to set plugs; wait-on-cement times, if any; and any deviations from the approved plugging plan (if applicable).

For conversion to a non-injection well, include the following information: Depths of activity; type of activity; changes to injection well configuration, well casing, or cement behind casing; any plug added to the well and its depth; any newly drilled interval and its depth; depths of new perforations; and method(s) to demonstrate that the well has mechanical integrity (as applicable).

For all of the above activities, include a well sketch depicting the work, results of well tests/logging performed, service company tickets, and any other available information demonstrating how the work was/is to be performed. Also, specify whether depths are below ground surface, relative to Kelly bushing, etc.

CERTIFICATION: This form must be signed and dated by either: a responsible corporate officer for a corporation, by a general partner for a partnership, by the proprietor of a sole proprietorship, or by a principal executive or ranking elected official for a public agency.

PAPERWORK REDUCTION ACT NOTICE: The public reporting and recordkeeping burden for this collection of information is estimated to average between 6.0 and 7.9 hours per response, depending on the injection well class. Burden means the total time, effort, or financial resource expended by persons to generate, maintain, retain, or disclose or provide information to or for a Federal Agency. This includes the time needed to review instructions; develop, acquire, install, and utilize technology and systems for the purposes of collecting, validating, and verifying information, processing and maintaining information, and disclosing and providing information; adjust the existing ways to comply with any previously applicable instructions and requirements; train personnel to be able to respond to the collection of information; search data sources; complete and review the collection of information; and, transmit or otherwise disclose the information. An agency may not conduct or sponsor, and a person is not required to respond to, a collection of information unless it displays a currently valid OMB control number. Send comments on the Agency's need for this information, the accuracy of the provided burden estimates, and any suggested methods for minimizing respondent burden, including the use of automated collection techniques to Director, Collection Strategies Division, U.S. Environmental Protection Agency (2822), 1200 Pennsylvania Ave., NW., Washington, D.C. 20460. Include the OMB control number in any correspondence. Do not send the completed forms to this address.

AS-BUILT COREHOLE MCC538

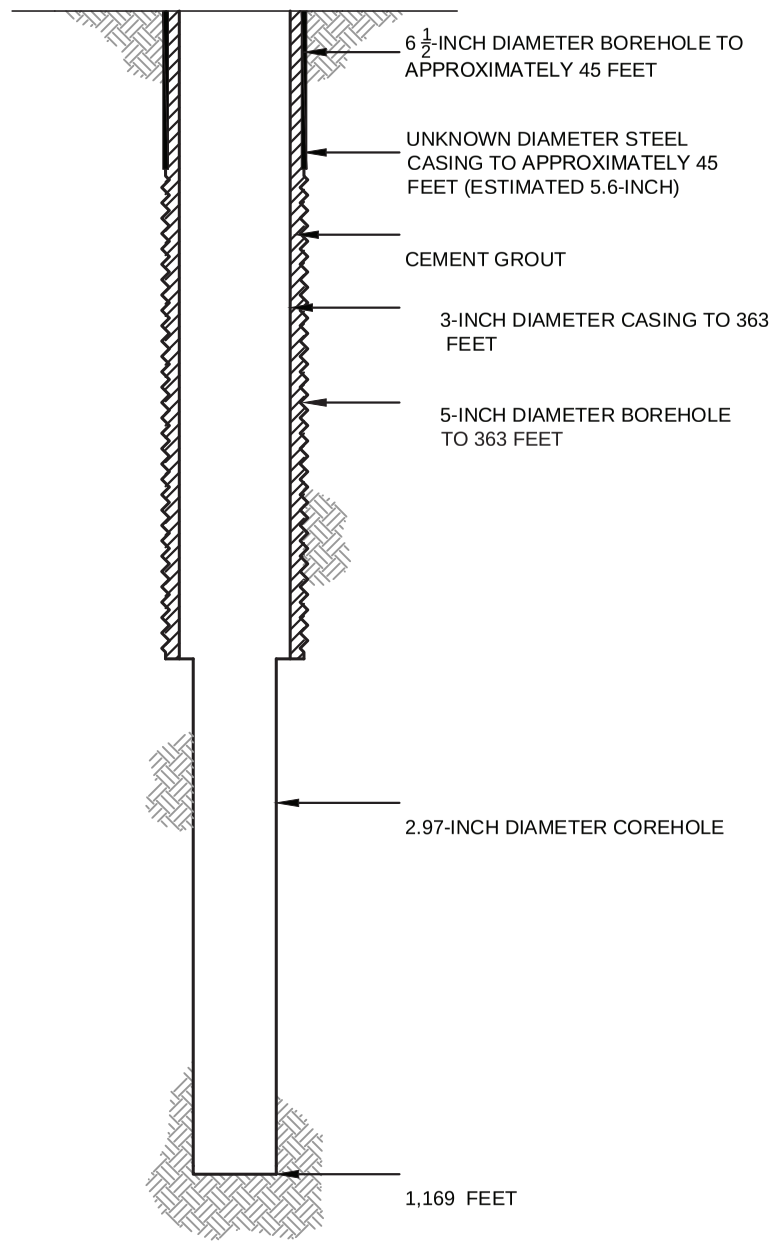

PROPOSED PLUGGING AND ABANDONMENT COREHOLE MCC538

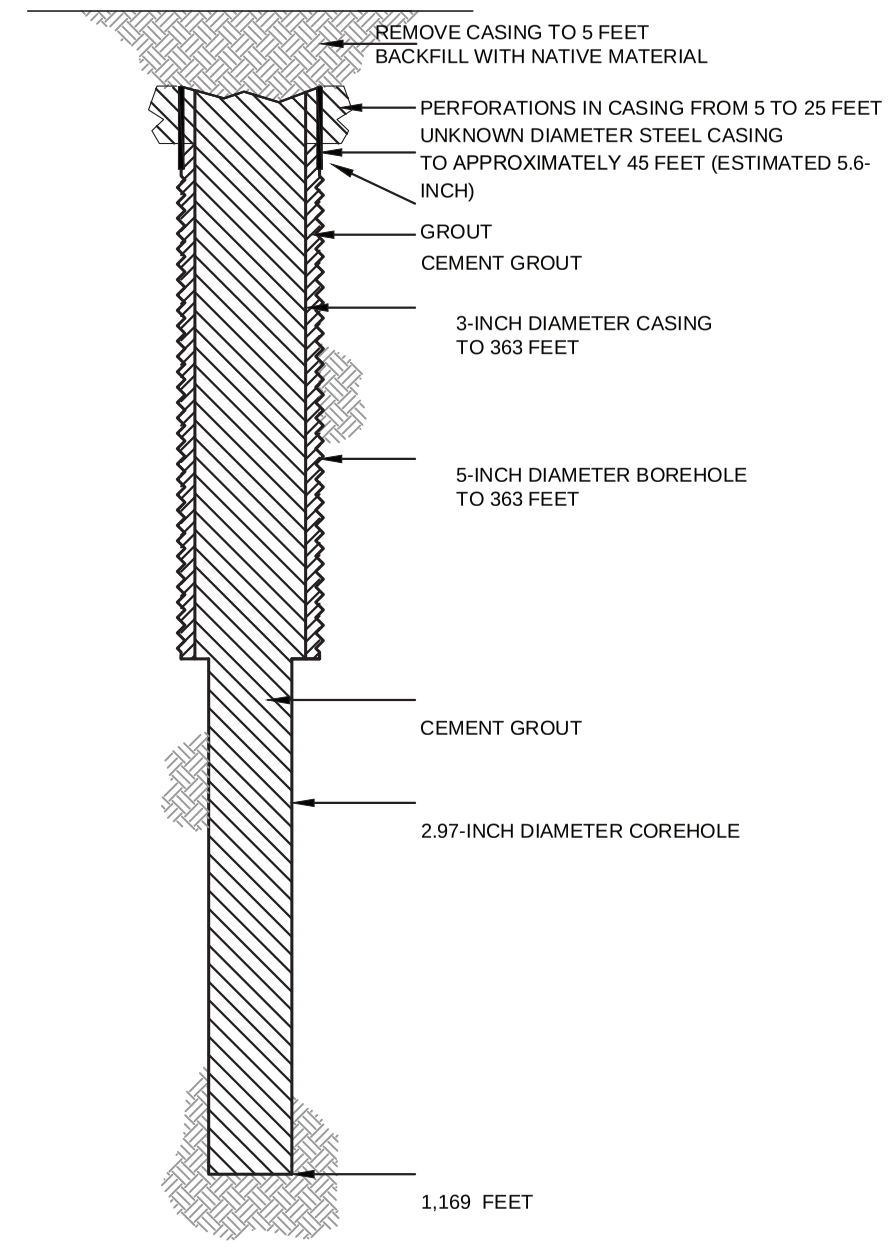

HALEY ALDRICH

FLORENCE COPPER, INC.
FLORENCE, ARIZONA

COREHOLE MCC538 DIAGRAM

FLORENCE COPPER INC.

NOT TO SCALE
SEPTEMBER 2019

FIGURE 1

MOBINI, GITA Printed: 4/21/2017 12:00 PM Layout: ABANDON (2)
\PROJECTS\CURIS RESOURCES38706-CURIS FEASIBILITY\DRAWINGS\EPA\WELL ABANDON\415S_ABANDON.DWG

OMB No. 2040-0042 Approval Expires 4/30/2022

United States Environmental Protection Agency

WELL REWORK RECORD, PLUGGING AND ABANDONMENT PLAN, OR PLUGGING AND ABANDONMENT AFFIDAVIT

Name and Address, Phone Number and/or Email of Permittee

Florence Copper Project
1575 W Hunt Hwy,
Florence, AZ 85132

Permit or EPA ID Number	API Number	Full Well Name
R9UIC-AZ3-FY11-1		MCC540

State	County
Arizona	Pinal

Locate well in two directions from nearest lines of quarter section and drilling unit

Latitude 33.04746014

Longitude -111.433082047

Surface Location

SE **1/4 of** SW **1/4 of Section** 28 **Township** 4S **Range** 9E

_____ **ft. from (N/S)** _____ **Line of quarter section**

_____ **ft. from (E/W)** _____ **Line of quarter section.**

Well Class	Timing of Action (pick one)	Type of Action (pick one)
☐ Class I ☐ Class II ☑ Class III ☐ Class V	☑ Notice Prior to Work Date Expected to Commence March 2021 ☐ Report After Work Date Work Ended	☐ Well Rework ☑ Plugging and Abandonment ☐ Conversion to a Non-Injection Well

Provide a narrative description of the work planned to be performed, or that was performed. Use additional pages as necessary. See instructions.

A workover rig capable of performing the required abandonment operations at the required depths will be moved in and set up over the core hole. The core hole will be inspected to determine the depth to which the hole remains open and if any obstructions are present in the core hole; the presence and condition of any existing collar will also be documented. If necessary, the core hole will be cleaned out to a depth of at least 100 feet below the bedrock-LBFU contact to enable placement of cement seals.

If collar is present, an attempt will be made to remove it. If removal of the collar is not feasible, it will be left in the hole and perforated as needed to allow an annular seal to be placed to a depth of at least 25 feet bgs. In areas of agricultural use, the surface casing will be cut at least 5 feet bgs and removed.

If the collar cannot be removed, it will be perforated from at least 20 feet below the bedrock-LBFU contact to at least 20 feet above the contact; from at least 20 feet below the base of the MFGU to at least 20 feet above the top of the MFGU; and from at least 25 feet bgs to 5 feet bgs.

A tremie pipe will be used to place Type V cement in the open core hole from the bottom of the core hole to the top of the core hole. Cement retainers, as described above, will be used to force cement grout into the annulus and behind perforated intervals, as necessary.

If the hole has been obstructed, as much cement as possible will be placed from 100 feet below the LBFU-bedrock contact to the top of the core hole.

The volume of Type V cement will be recorded and will not be less than the estimated volume of material required to fill each interval. All cement grout will consist of Type V cement, or equivalent approved in accordance with the UIC Permit.

Certification

I certify under the penalty of law that I have personally examined and am familiar with the information submitted in this document and all attachments and that, based on my inquiry of those individuals immediately responsible for obtaining the information, I believe that the information is true, accurate, and complete. I am aware that there are significant penalties for submitting false information, including the possibliity of fine and imprisonment. (Ref. 40 CFR § 144.32)

Name and Official Title *(Please type or print)*	Signature	Date Signed
Dan Johnson, VP - General Manager		10/3/2019

INSTRUCTIONS FOR FORM 7520-19

This form replaces forms 7520-12 and 7520-14. Use this form only when work is planned or has occurred that affects the well's construction or operation as an injection well, including work on the casing, tubing or packer (or for shallow Class V wells, the subsurface fluid emplacement network). Use one form per injection well. While reports or other information developed by contractors or service companies may be attached, this form must be signed by a responsible entity as described at 40 CFR 144.32. Note: operators closing Class V wells should use Form 7520-17.

NAME, ADDRESS, PHONE AND/OR EMAIL OF PERMITTEE: Enter the name and street address, city/town, state, and ZIP code of the permittee. Also provide an email address (if available) and/or a phone number.

PERMIT OR EPA ID NUMBER: Enter the well identification number or permit number assigned to the well by the EPA or the permitting authority.

API NUMBER: Enter the number assigned by the local jurisdiction (usually a State Oil and Gas Agency) using the American Petroleum Institute standard numbering system.

FULL WELL NAME: Enter the full name of the well or project.

Enter the **STATE** and **COUNTY** where the well is located. For States that do not have counties, use the name of that State's equivalent jurisdiction at a more local level.

WELL LOCATION: Fill in the complete township, range, and section to the nearest quarter-quarter section. A township is north or south of the baseline, and a range is east or west of the principal meridian (e.g., T12N, R34W). Also include the distance, in feet, from the nearest north or south line and nearest east or west line of the quarter-section. Also, enter the **latitude** and **longitude** of the well in decimal degrees, to five or six places if possible; be sure to include a negative sign for the longitude of a well in the Western Hemisphere and a negative sign for the latitude of a well in the Southern Hemisphere.

Enter the **WELL CLASS,** i.e., the class of injection well as defined in 40 CFR 144.6.

TIMING OF THE ACTION: Check ***Notice prior to work*** if the activity has not yet occurred (i.e., is planned). Check ***Report after work*** if the activity described has already occurred. As appropriate, include the date the activity is expected to start or the date the activity was completed. (Note this may not be available, e.g., for a plugging plan submitted with a permit application.)

TYPE OF ACTION: Check the appropriate box to describe the kind of activity being reported. Check ***Well Rework*** for work that was/will be performed on the well after it has already been in operation as an injection well. Check ***Plugging and Abandonment*** to report on plans for or descriptions of final closure/plugging after use as an injection well. Check ***Conversion to a Non-Injection Well*** if the well is to be converted to something other than an injection well.

Provide a **NARRATIVE DESCRIPTION** of the work planned to be performed, or that was performed. The narrative should include a description of the main procedures planned or that occurred during the work activity. A service company report, daily report, or similar document may be attached if it includes all the requested information and is clear and legible.

For well reworks, include the following information: The reason for the well rework; depths of activity; type of activity; changes to injection well configuration, well casing, or cement behind casing; any plug added to the well and its depth; any newly drilled interval and its depth; method(s) to demonstrate that the well has mechanical integrity (as applicable); and any deviations from the approved rework plan (as applicable).

For a well plugging plan, include the following information: Reason for the well plugging; number of plugs placed, and their depths; materials used as plugs (e.g., cast iron bridge plug, cement, cement retainer); method to set plugs; and wait-on-cement times, if any. Also provide one or more cost estimates from an independent firm in the business of plugging and abandoning wells to plug the well as described in the plan.

For well plugging affidavit, include the following information: Reason for the well plugging; number of plugs placed, and their depths; materials used as plugs (e.g., cast iron bridge plug, cement, cement retainer); method to set plugs; wait-on-cement times, if any; and any deviations from the approved plugging plan (if applicable).

For conversion to a non-injection well, include the following information: Depths of activity; type of activity; changes to injection well configuration, well casing, or cement behind casing; any plug added to the well and its depth; any newly drilled interval and its depth; depths of new perforations; and method(s) to demonstrate that the well has mechanical integrity (as applicable).

For all of the above activities, include a well sketch depicting the work, results of well tests/logging performed, service company tickets, and any other available information demonstrating how the work was/is to be performed. Also, specify whether depths are below ground surface, relative to Kelly bushing, etc.

CERTIFICATION: This form must be signed and dated by either: a responsible corporate officer for a corporation, by a general partner for a partnership, by the proprietor of a sole proprietorship, or by a principal executive or ranking elected official for a public agency.

PAPERWORK REDUCTION ACT NOTICE: The public reporting and recordkeeping burden for this collection of information is estimated to average between 6.0 and 7.9 hours per response, depending on the injection well class. Burden means the total time, effort, or financial resource expended by persons to generate, maintain, retain, or disclose or provide information to or for a Federal Agency. This includes the time needed to review instructions; develop, acquire, install, and utilize technology and systems for the purposes of collecting, validating, and verifying information, processing and maintaining information, and disclosing and providing information; adjust the existing ways to comply with any previously applicable instructions and requirements; train personnel to be able to respond to the collection of information; search data sources; complete and review the collection of information; and, transmit or otherwise disclose the information. An agency may not conduct or sponsor, and a person is not required to respond to, a collection of information unless it displays a currently valid OMB control number. Send comments on the Agency's need for this information, the accuracy of the provided burden estimates, and any suggested methods for minimizing respondent burden, including the use of automated collection techniques to Director, Collection Strategies Division, U.S. Environmental Protection Agency (2822), 1200 Pennsylvania Ave., NW., Washington, D.C. 20460. Include the OMB control number in any correspondence. Do not send the completed forms to this address.

AS-BUILT COREHOLE MCC540

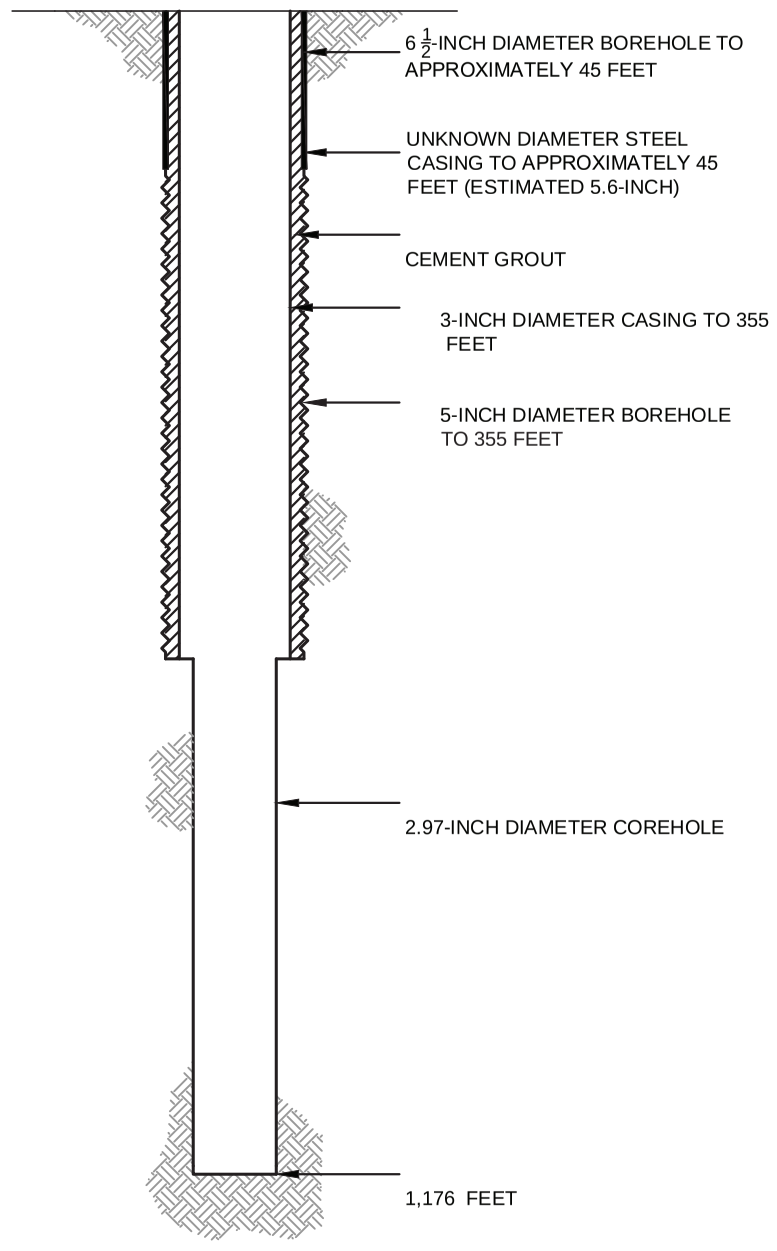

PROPOSED PLUGGING AND ABANDONMENT COREHOLE MCC540

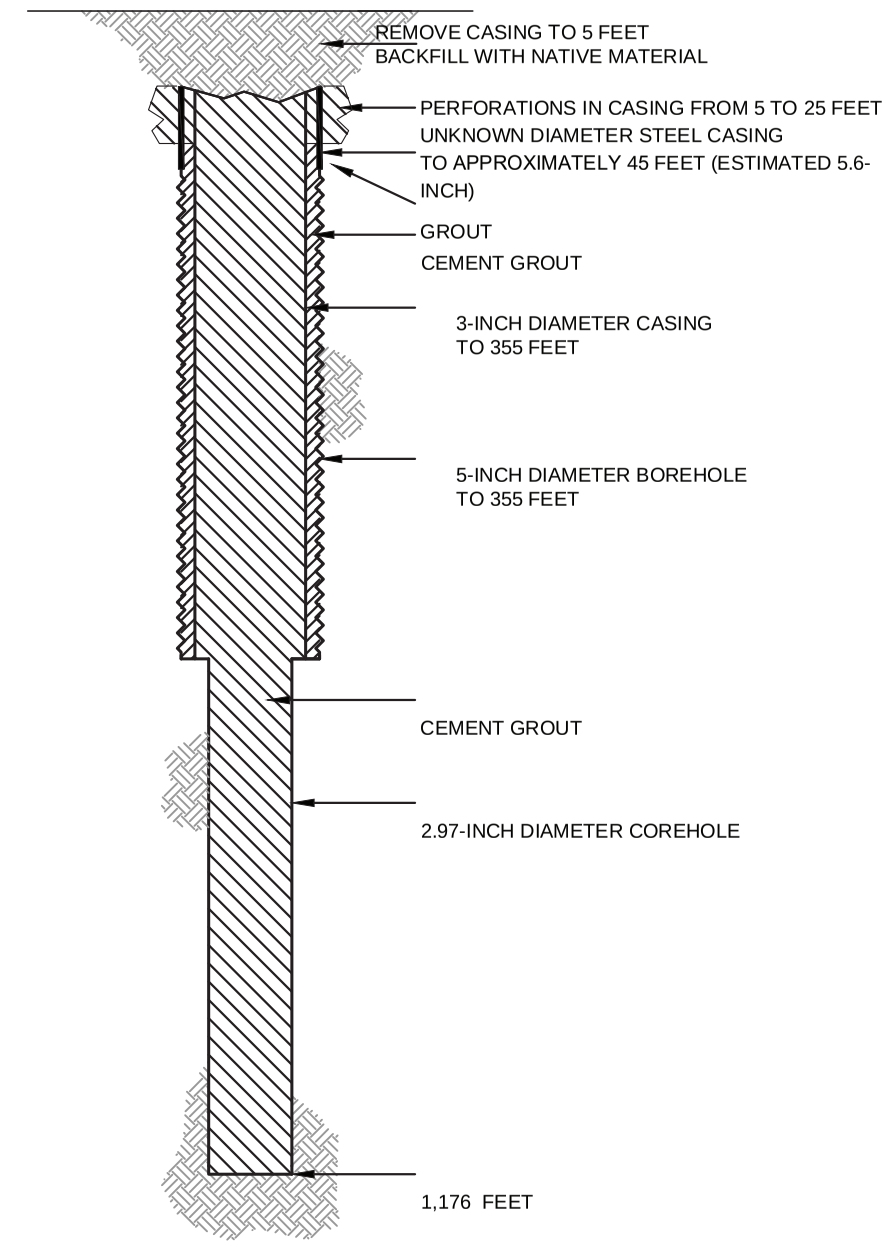

HALEY ALDRICH

FLORENCE COPPER, INC.
FLORENCE, ARIZONA

COREHOLE MCC540 DIAGRAM

FLORENCE COPPER INC.

NOT TO SCALE
SEPTEMBER 2019

FIGURE 1

MOBINI, GITA Printed: 4/21/2017 12:00 PM Layout: ABANDON (2)
\PROJECTS\CURIS RESOURCES38706-CURIS FEASIBILITY\DRAWINGS\EPA\WELL ABANDON\415S_ABANDON.DWG

OMB No. 2040-0042 Approval Expires 4/30/2022

United States Environmental Protection Agency

WELL REWORK RECORD, PLUGGING AND ABANDONMENT PLAN, OR PLUGGING AND ABANDONMENT AFFIDAVIT

Name and Address, Phone Number and/or Email of Permittee

Florence Copper Project
1575 W Hunt Hwy,
Florence, AZ 85132

Permit or EPA ID Number	API Number	Full Well Name
R9UIC-AZ3-FY11-1		MCC541

State	County
Arizona	Pinal

Locate well in two directions from nearest lines of quarter section and drilling unit

Latitude 33.04562075

Longitude -111.4321555

Surface Location

NE **1/4 of** NW **1/4 of Section** 33 **Township** 4S **Range** 9E

_____ **ft. from (N/S)** _____ **Line of quarter section**

_____ **ft. from (E/W)** _____ **Line of quarter section.**

Well Class	Timing of Action (pick one)	Type of Action (pick one)
☐ Class I ☐ Class II ☑ Class III ☐ Class V	☑ Notice Prior to Work Date Expected to Commence March 2021 ☐ Report After Work Date Work Ended	☐ Well Rework ☑ Plugging and Abandonment ☐ Conversion to a Non-Injection Well

Provide a narrative description of the work planned to be performed, or that was performed. Use additional pages as necessary. See instructions.

A workover rig capable of performing the required abandonment operations at the required depths will be moved in and set up over the core hole. The core hole will be inspected to determine the depth to which the hole remains open and if any obstructions are present in the core hole; the presence and condition of any existing collar will also be documented. If necessary, the core hole will be cleaned out to a depth of at least 100 feet below the bedrock-LBFU contact to enable placement of cement seals.

If collar is present, an attempt will be made to remove it. If removal of the collar is not feasible, it will be left in the hole and perforated as needed to allow an annular seal to be placed to a depth of at least 25 feet bgs. In areas of agricultural use, the surface casing will be cut at least 5 feet bgs and removed.

If the collar cannot be removed, it will be perforated from at least 20 feet below the bedrock-LBFU contact to at least 20 feet above the contact; from at least 20 feet below the base of the MFGU to at least 20 feet above the top of the MFGU; and from at least 25 feet bgs to 5 feet bgs.

A tremie pipe will be used to place Type V cement in the open core hole from the bottom of the core hole to the top of the core hole. Cement retainers, as described above, will be used to force cement grout into the annulus and behind perforated intervals, as necessary.

If the hole has been obstructed, as much cement as possible will be placed from 100 feet below the LBFU-bedrock contact to the top of the core hole.

The volume of Type V cement will be recorded and will not be less than the estimated volume of material required to fill each interval. All cement grout will consist of Type V cement, or equivalent approved in accordance with the UIC Permit.

Certification

I certify under the penalty of law that I have personally examined and am familiar with the information submitted in this document and all attachments and that, based on my inquiry of those individuals immediately responsible for obtaining the information, I believe that the information is true, accurate, and complete. I am aware that there are significant penalties for submitting false information, including the possibliity of fine and imprisonment. (Ref. 40 CFR § 144.32)

Name and Official Title *(Please type or print)*	Signature	Date Signed
Dan Johnson, VP - General Manager		10/3/2019

INSTRUCTIONS FOR FORM 7520-19

This form replaces forms 7520-12 and 7520-14. Use this form only when work is planned or has occurred that affects the well's construction or operation as an injection well, including work on the casing, tubing or packer (or for shallow Class V wells, the subsurface fluid emplacement network). Use one form per injection well. While reports or other information developed by contractors or service companies may be attached, this form must be signed by a responsible entity as described at 40 CFR 144.32. Note: operators closing Class V wells should use Form 7520-17.

NAME, ADDRESS, PHONE AND/OR EMAIL OF PERMITTEE: Enter the name and street address, city/town, state, and ZIP code of the permittee. Also provide an email address (if available) and/or a phone number.

PERMIT OR EPA ID NUMBER: Enter the well identification number or permit number assigned to the well by the EPA or the permitting authority.

API NUMBER: Enter the number assigned by the local jurisdiction (usually a State Oil and Gas Agency) using the American Petroleum Institute standard numbering system.

FULL WELL NAME: Enter the full name of the well or project.

Enter the **STATE** and **COUNTY** where the well is located. For States that do not have counties, use the name of that State's equivalent jurisdiction at a more local level.

WELL LOCATION: Fill in the complete township, range, and section to the nearest quarter-quarter section. A township is north or south of the baseline, and a range is east or west of the principal meridian (e.g., T12N, R34W). Also include the distance, in feet, from the nearest north or south line and nearest east or west line of the quarter-section. Also, enter the **latitude** and **longitude** of the well in decimal degrees, to five or six places if possible; be sure to include a negative sign for the longitude of a well in the Western Hemisphere and a negative sign for the latitude of a well in the Southern Hemisphere.

Enter the **WELL CLASS,** i.e., the class of injection well as defined in 40 CFR 144.6.

TIMING OF THE ACTION: Check ***Notice prior to work*** if the activity has not yet occurred (i.e., is planned). Check ***Report after work*** if the activity described has already occurred. As appropriate, include the date the activity is expected to start or the date the activity was completed. (Note this may not be available, e.g., for a plugging plan submitted with a permit application.)

TYPE OF ACTION: Check the appropriate box to describe the kind of activity being reported. Check ***Well Rework*** for work that was/will be performed on the well after it has already been in operation as an injection well. Check ***Plugging and Abandonment*** to report on plans for or descriptions of final closure/plugging after use as an injection well. Check ***Conversion to a Non-Injection Well*** if the well is to be converted to something other than an injection well.

Provide a **NARRATIVE DESCRIPTION** of the work planned to be performed, or that was performed. The narrative should include a description of the main procedures planned or that occurred during the work activity. A service company report, daily report, or similar document may be attached if it includes all the requested information and is clear and legible.

For well reworks, include the following information: The reason for the well rework; depths of activity; type of activity; changes to injection well configuration, well casing, or cement behind casing; any plug added to the well and its depth; any newly drilled interval and its depth; method(s) to demonstrate that the well has mechanical integrity (as applicable); and any deviations from the approved rework plan (as applicable).

For a well plugging plan, include the following information: Reason for the well plugging; number of plugs placed, and their depths; materials used as plugs (e.g., cast iron bridge plug, cement, cement retainer); method to set plugs; and wait-on-cement times, if any. Also provide one or more cost estimates from an independent firm in the business of plugging and abandoning wells to plug the well as described in the plan.

For well plugging affidavit, include the following information: Reason for the well plugging; number of plugs placed, and their depths; materials used as plugs (e.g., cast iron bridge plug, cement, cement retainer); method to set plugs; wait-on-cement times, if any; and any deviations from the approved plugging plan (if applicable).

For conversion to a non-injection well, include the following information: Depths of activity; type of activity; changes to injection well configuration, well casing, or cement behind casing; any plug added to the well and its depth; any newly drilled interval and its depth; depths of new perforations; and method(s) to demonstrate that the well has mechanical integrity (as applicable).

For all of the above activities, include a well sketch depicting the work, results of well tests/logging performed, service company tickets, and any other available information demonstrating how the work was/is to be performed. Also, specify whether depths are below ground surface, relative to Kelly bushing, etc.

CERTIFICATION: This form must be signed and dated by either: a responsible corporate officer for a corporation, by a general partner for a partnership, by the proprietor of a sole proprietorship, or by a principal executive or ranking elected official for a public agency.

PAPERWORK REDUCTION ACT NOTICE: The public reporting and recordkeeping burden for this collection of information is estimated to average between 6.0 and 7.9 hours per response, depending on the injection well class. Burden means the total time, effort, or financial resource expended by persons to generate, maintain, retain, or disclose or provide information to or for a Federal Agency. This includes the time needed to review instructions; develop, acquire, install, and utilize technology and systems for the purposes of collecting, validating, and verifying information, processing and maintaining information, and disclosing and providing information; adjust the existing ways to comply with any previously applicable instructions and requirements; train personnel to be able to respond to the collection of information; search data sources; complete and review the collection of information; and, transmit or otherwise disclose the information. An agency may not conduct or sponsor, and a person is not required to respond to, a collection of information unless it displays a currently valid OMB control number. Send comments on the Agency's need for this information, the accuracy of the provided burden estimates, and any suggested methods for minimizing respondent burden, including the use of automated collection techniques to Director, Collection Strategies Division, U.S. Environmental Protection Agency (2822), 1200 Pennsylvania Ave., NW., Washington, D.C. 20460. Include the OMB control number in any correspondence. Do not send the completed forms to this address.

AS-BUILT COREHOLE MCC541

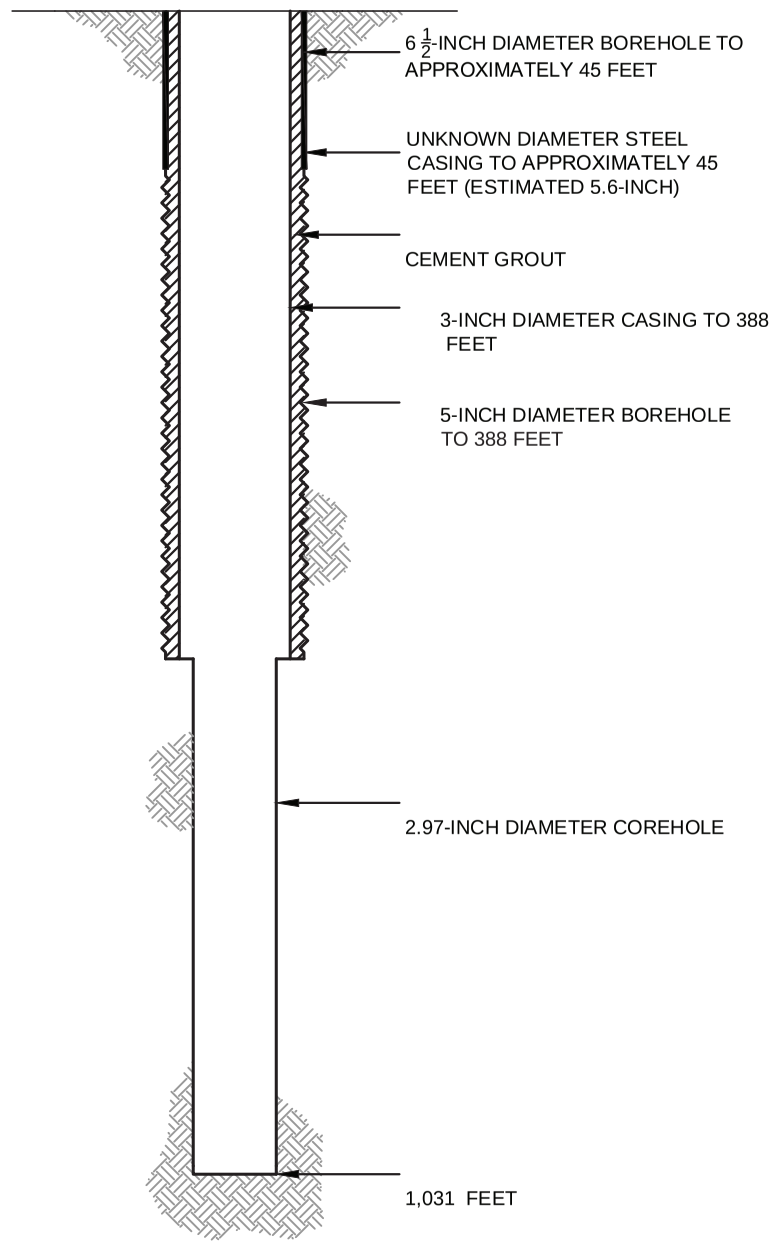

PROPOSED PLUGGING AND ABANDONMENT COREHOLE MCC541

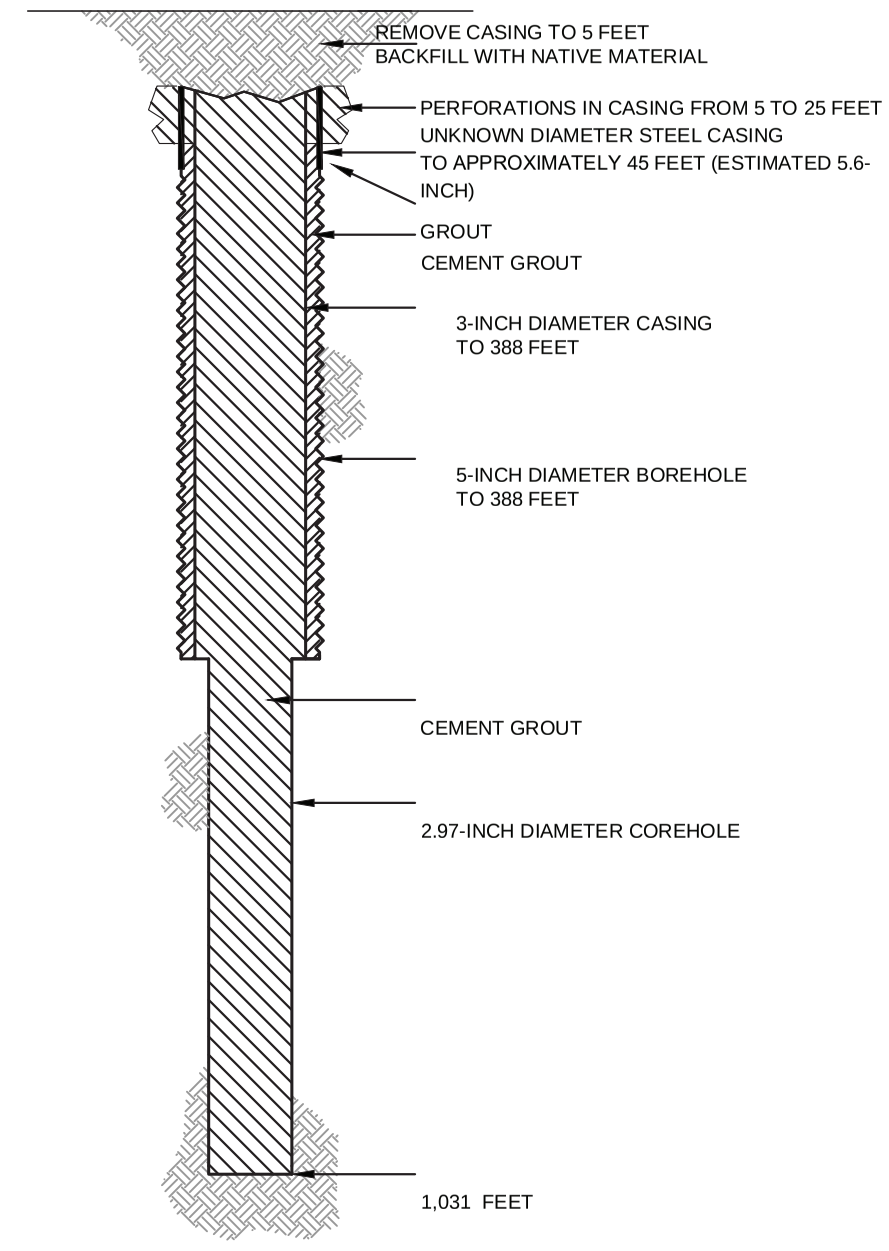

HALEY ALDRICH

FLORENCE COPPER, INC.
FLORENCE, ARIZONA

COREHOLE MCC541 DIAGRAM

FLORENCE COPPER INC.

NOT TO SCALE
SEPTEMBER 2019

FIGURE 1

MOBINI, GITA Printed: 4/21/2017 12:00 PM Layout: ABANDON (2)
\PROJECTS\CURIS RESOURCES38706-CURIS FEASIBILITY\DRAWINGS\EPA\WELL ABANDON\415S_ABANDON.DWG

OMB No. 2040-0042 Approval Expires 4/30/2022

United States Environmental Protection Agency

WELL REWORK RECORD, PLUGGING AND ABANDONMENT PLAN, OR PLUGGING AND ABANDONMENT AFFIDAVIT

Name and Address, Phone Number and/or Email of Permittee

Florence Copper Project
1575 W Hunt Hwy,
Florence, AZ 85132

Permit or EPA ID Number	API Number	Full Well Name
R9UIC-AZ3-FY11-1		MCC542

State	County
Arizona	Pinal

Locate well in two directions from nearest lines of quarter section and drilling unit

Latitude 33.0528205

Longitude -111.4340792

Surface Location

NE **1/4 of** SW **1/4 of Section** 28 **Township** 4S **Range** 9E

_____ **ft. from (N/S)** _____ **Line of quarter section**

_____ **ft. from (E/W)** _____ **Line of quarter section.**

Well Class	Timing of Action (pick one)	Type of Action (pick one)
☐ Class I ☐ Class II ☑ Class III ☐ Class V	☑ Notice Prior to Work Date Expected to Commence March 2021 ☐ Report After Work Date Work Ended	☐ Well Rework ☑ Plugging and Abandonment ☐ Conversion to a Non-Injection Well

Provide a narrative description of the work planned to be performed, or that was performed. Use additional pages as necessary. See instructions.

A workover rig capable of performing the required abandonment operations at the required depths will be moved in and set up over the core hole. The core hole will be inspected to determine the depth to which the hole remains open and if any obstructions are present in the core hole; the presence and condition of any existing collar will also be documented. If necessary, the core hole will be cleaned out to a depth of at least 100 feet below the bedrock-LBFU contact to enable placement of cement seals.

If collar is present, an attempt will be made to remove it. If removal of the collar is not feasible, it will be left in the hole and perforated as needed to allow an annular seal to be placed to a depth of at least 25 feet bgs. In areas of agricultural use, the surface casing will be cut at least 5 feet bgs and removed.

If the collar cannot be removed, it will be perforated from at least 20 feet below the bedrock-LBFU contact to at least 20 feet above the contact; from at least 20 feet below the base of the MFGU to at least 20 feet above the top of the MFGU; and from at least 25 feet bgs to 5 feet bgs.

A tremie pipe will be used to place Type V cement in the open core hole from the bottom of the core hole to the top of the core hole. Cement retainers, as described above, will be used to force cement grout into the annulus and behind perforated intervals, as necessary.

If the hole has been obstructed, as much cement as possible will be placed from 100 feet below the LBFU-bedrock contact to the top of the core hole.

The volume of Type V cement will be recorded and will not be less than the estimated volume of material required to fill each interval. All cement grout will consist of Type V cement, or equivalent approved in accordance with the UIC Permit.

Certification

I certify under the penalty of law that I have personally examined and am familiar with the information submitted in this document and all attachments and that, based on my inquiry of those individuals immediately responsible for obtaining the information, I believe that the information is true, accurate, and complete. I am aware that there are significant penalties for submitting false information, including the possibliity of fine and imprisonment. (Ref. 40 CFR § 144.32)

Name and Official Title *(Please type or print)*	Signature	Date Signed
Dan Johnson, VP - General Manager		10/3/2019

INSTRUCTIONS FOR FORM 7520-19

This form replaces forms 7520-12 and 7520-14. Use this form only when work is planned or has occurred that affects the well's construction or operation as an injection well, including work on the casing, tubing or packer (or for shallow Class V wells, the subsurface fluid emplacement network). Use one form per injection well. While reports or other information developed by contractors or service companies may be attached, this form must be signed by a responsible entity as described at 40 CFR 144.32. Note: operators closing Class V wells should use Form 7520-17.

NAME, ADDRESS, PHONE AND/OR EMAIL OF PERMITTEE: Enter the name and street address, city/town, state, and ZIP code of the permittee. Also provide an email address (if available) and/or a phone number.

PERMIT OR EPA ID NUMBER: Enter the well identification number or permit number assigned to the well by the EPA or the permitting authority.

API NUMBER: Enter the number assigned by the local jurisdiction (usually a State Oil and Gas Agency) using the American Petroleum Institute standard numbering system.

FULL WELL NAME: Enter the full name of the well or project.

Enter the **STATE** and **COUNTY** where the well is located. For States that do not have counties, use the name of that State's equivalent jurisdiction at a more local level.

WELL LOCATION: Fill in the complete township, range, and section to the nearest quarter-quarter section. A township is north or south of the baseline, and a range is east or west of the principal meridian (e.g., T12N, R34W). Also include the distance, in feet, from the nearest north or south line and nearest east or west line of the quarter-section. Also, enter the **latitude** and **longitude** of the well in decimal degrees, to five or six places if possible; be sure to include a negative sign for the longitude of a well in the Western Hemisphere and a negative sign for the latitude of a well in the Southern Hemisphere.

Enter the **WELL CLASS,** i.e., the class of injection well as defined in 40 CFR 144.6.

TIMING OF THE ACTION: Check ***Notice prior to work*** if the activity has not yet occurred (i.e., is planned). Check ***Report after work*** if the activity described has already occurred. As appropriate, include the date the activity is expected to start or the date the activity was completed. (Note this may not be available, e.g., for a plugging plan submitted with a permit application.)

TYPE OF ACTION: Check the appropriate box to describe the kind of activity being reported. Check ***Well Rework*** for work that was/will be performed on the well after it has already been in operation as an injection well. Check ***Plugging and Abandonment*** to report on plans for or descriptions of final closure/plugging after use as an injection well. Check ***Conversion to a Non-Injection Well*** if the well is to be converted to something other than an injection well.

Provide a **NARRATIVE DESCRIPTION** of the work planned to be performed, or that was performed. The narrative should include a description of the main procedures planned or that occurred during the work activity. A service company report, daily report, or similar document may be attached if it includes all the requested information and is clear and legible.

For well reworks, include the following information: The reason for the well rework; depths of activity; type of activity; changes to injection well configuration, well casing, or cement behind casing; any plug added to the well and its depth; any newly drilled interval and its depth; method(s) to demonstrate that the well has mechanical integrity (as applicable); and any deviations from the approved rework plan (as applicable).

For a well plugging plan, include the following information: Reason for the well plugging; number of plugs placed, and their depths; materials used as plugs (e.g., cast iron bridge plug, cement, cement retainer); method to set plugs; and wait-on-cement times, if any. Also provide one or more cost estimates from an independent firm in the business of plugging and abandoning wells to plug the well as described in the plan.

For well plugging affidavit, include the following information: Reason for the well plugging; number of plugs placed, and their depths; materials used as plugs (e.g., cast iron bridge plug, cement, cement retainer); method to set plugs; wait-on-cement times, if any; and any deviations from the approved plugging plan (if applicable).

For conversion to a non-injection well, include the following information: Depths of activity; type of activity; changes to injection well configuration, well casing, or cement behind casing; any plug added to the well and its depth; any newly drilled interval and its depth; depths of new perforations; and method(s) to demonstrate that the well has mechanical integrity (as applicable).

For all of the above activities, include a well sketch depicting the work, results of well tests/logging performed, service company tickets, and any other available information demonstrating how the work was/is to be performed. Also, specify whether depths are below ground surface, relative to Kelly bushing, etc.

CERTIFICATION: This form must be signed and dated by either: a responsible corporate officer for a corporation, by a general partner for a partnership, by the proprietor of a sole proprietorship, or by a principal executive or ranking elected official for a public agency.

PAPERWORK REDUCTION ACT NOTICE: The public reporting and recordkeeping burden for this collection of information is estimated to average between 6.0 and 7.9 hours per response, depending on the injection well class. Burden means the total time, effort, or financial resource expended by persons to generate, maintain, retain, or disclose or provide information to or for a Federal Agency. This includes the time needed to review instructions; develop, acquire, install, and utilize technology and systems for the purposes of collecting, validating, and verifying information, processing and maintaining information, and disclosing and providing information; adjust the existing ways to comply with any previously applicable instructions and requirements; train personnel to be able to respond to the collection of information; search data sources; complete and review the collection of information; and, transmit or otherwise disclose the information. An agency may not conduct or sponsor, and a person is not required to respond to, a collection of information unless it displays a currently valid OMB control number. Send comments on the Agency's need for this information, the accuracy of the provided burden estimates, and any suggested methods for minimizing respondent burden, including the use of automated collection techniques to Director, Collection Strategies Division, U.S. Environmental Protection Agency (2822), 1200 Pennsylvania Ave., NW., Washington, D.C. 20460. Include the OMB control number in any correspondence. Do not send the completed forms to this address.

AS-BUILT COREHOLE MCC542

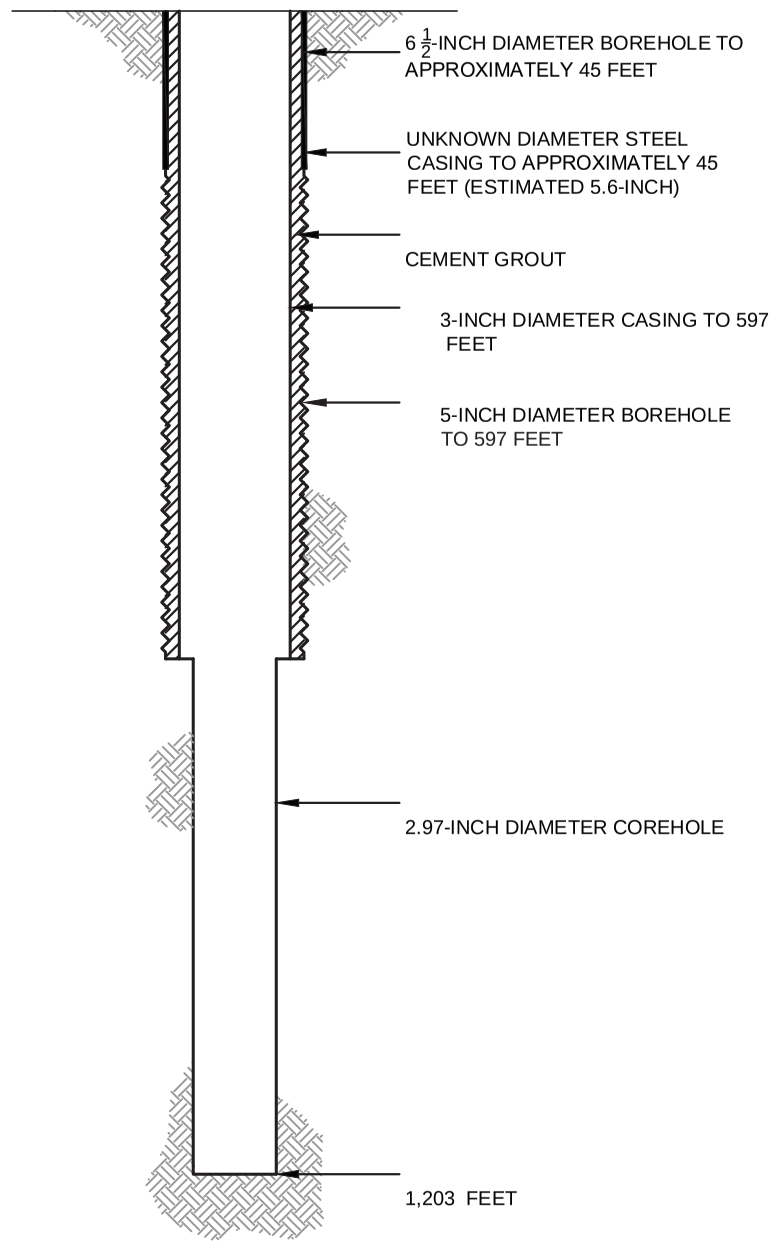

PROPOSED PLUGGING AND ABANDONMENT COREHOLE MCC542

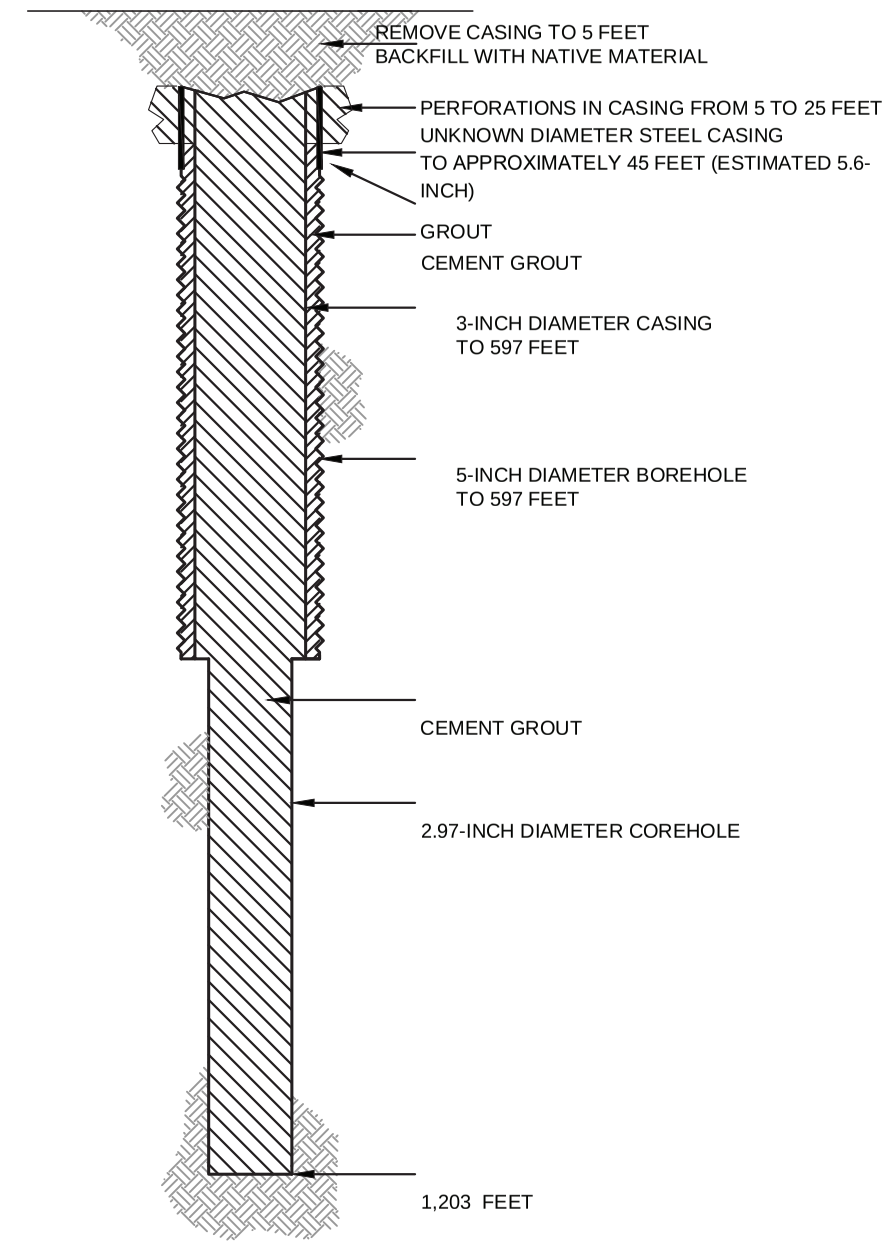

HALEY ALDRICH

FLORENCE COPPER, INC.
FLORENCE, ARIZONA

COREHOLE MCC542 DIAGRAM

FLORENCE COPPER INC.

NOT TO SCALE
SEPTEMBER 2019

FIGURE 1

MOBINI, GITA Printed: 4/21/2017 12:00 PM Layout: ABANDON (2)
\PROJECTS\CURIS RESOURCES38706-CURIS FEASIBILITY\DRAWINGS\EPA\WELL ABANDON\415S_ABANDON.DWG

OMB No. 2040-0042 Approval Expires 4/30/2022

United States Environmental Protection Agency

WELL REWORK RECORD, PLUGGING AND ABANDONMENT PLAN, OR PLUGGING AND ABANDONMENT AFFIDAVIT

Name and Address, Phone Number and/or Email of Permittee

Florence Copper Project
1575 W Hunt Hwy,
Florence, AZ 85132

Permit or EPA ID Number	API Number	Full Well Name
R9UIC-AZ3-FY11-1		MCC543

State	County
Arizona	Pinal

Locate well in two directions from nearest lines of quarter section and drilling unit

Latitude 33.05214511

Longitude -111.4346331

Surface Location

NW **1/4 of** SW **1/4 of Section** 28 **Township** 4S **Range** 9E

_____ **ft. from (N/S)** _____ **Line of quarter section**

_____ **ft. from (E/W)** _____ **Line of quarter section.**

Well Class	Timing of Action (pick one)	Type of Action (pick one)
☐ Class I ☐ Class II ☑ Class III ☐ Class V	☑ Notice Prior to Work Date Expected to Commence March 2021 ☐ Report After Work Date Work Ended	☐ Well Rework ☑ Plugging and Abandonment ☐ Conversion to a Non-Injection Well

Provide a narrative description of the work planned to be performed, or that was performed. Use additional pages as necessary. See instructions.

A workover rig capable of performing the required abandonment operations at the required depths will be moved in and set up over the core hole. The core hole will be inspected to determine the depth to which the hole remains open and if any obstructions are present in the core hole; the presence and condition of any existing collar will also be documented. If necessary, the core hole will be cleaned out to a depth of at least 100 feet below the bedrock-LBFU contact to enable placement of cement seals.

If collar is present, an attempt will be made to remove it. If removal of the collar is not feasible, it will be left in the hole and perforated as needed to allow an annular seal to be placed to a depth of at least 25 feet bgs. In areas of agricultural use, the surface casing will be cut at least 5 feet bgs and removed.

If the collar cannot be removed, it will be perforated from at least 20 feet below the bedrock-LBFU contact to at least 20 feet above the contact; from at least 20 feet below the base of the MFGU to at least 20 feet above the top of the MFGU; and from at least 25 feet bgs to 5 feet bgs.

A tremie pipe will be used to place Type V cement in the open core hole from the bottom of the core hole to the top of the core hole. Cement retainers, as described above, will be used to force cement grout into the annulus and behind perforated intervals, as necessary.

If the hole has been obstructed, as much cement as possible will be placed from 100 feet below the LBFU-bedrock contact to the top of the core hole.

The volume of Type V cement will be recorded and will not be less than the estimated volume of material required to fill each interval. All cement grout will consist of Type V cement, or equivalent approved in accordance with the UIC Permit.

Certification

I certify under the penalty of law that I have personally examined and am familiar with the information submitted in this document and all attachments and that, based on my inquiry of those individuals immediately responsible for obtaining the information, I believe that the information is true, accurate, and complete. I am aware that there are significant penalties for submitting false information, including the possibliity of fine and imprisonment. (Ref. 40 CFR § 144.32)

Name and Official Title *(Please type or print)*	Signature	Date Signed
Dan Johnson, VP - General Manager		10/3/2019

INSTRUCTIONS FOR FORM 7520-19

This form replaces forms 7520-12 and 7520-14. Use this form only when work is planned or has occurred that affects the well's construction or operation as an injection well, including work on the casing, tubing or packer (or for shallow Class V wells, the subsurface fluid emplacement network). Use one form per injection well. While reports or other information developed by contractors or service companies may be attached, this form must be signed by a responsible entity as described at 40 CFR 144.32. Note: operators closing Class V wells should use Form 7520-17.

NAME, ADDRESS, PHONE AND/OR EMAIL OF PERMITTEE: Enter the name and street address, city/town, state, and ZIP code of the permittee. Also provide an email address (if available) and/or a phone number.

PERMIT OR EPA ID NUMBER: Enter the well identification number or permit number assigned to the well by the EPA or the permitting authority.

API NUMBER: Enter the number assigned by the local jurisdiction (usually a State Oil and Gas Agency) using the American Petroleum Institute standard numbering system.

FULL WELL NAME: Enter the full name of the well or project.

Enter the **STATE** and **COUNTY** where the well is located. For States that do not have counties, use the name of that State's equivalent jurisdiction at a more local level.

WELL LOCATION: Fill in the complete township, range, and section to the nearest quarter-quarter section. A township is north or south of the baseline, and a range is east or west of the principal meridian (e.g., T12N, R34W). Also include the distance, in feet, from the nearest north or south line and nearest east or west line of the quarter-section. Also, enter the **latitude** and **longitude** of the well in decimal degrees, to five or six places if possible; be sure to include a negative sign for the longitude of a well in the Western Hemisphere and a negative sign for the latitude of a well in the Southern Hemisphere.

Enter the **WELL CLASS,** i.e., the class of injection well as defined in 40 CFR 144.6.

TIMING OF THE ACTION: Check ***Notice prior to work*** if the activity has not yet occurred (i.e., is planned). Check ***Report after work*** if the activity described has already occurred. As appropriate, include the date the activity is expected to start or the date the activity was completed. (Note this may not be available, e.g., for a plugging plan submitted with a permit application.)

TYPE OF ACTION: Check the appropriate box to describe the kind of activity being reported. Check ***Well Rework*** for work that was/will be performed on the well after it has already been in operation as an injection well. Check ***Plugging and Abandonment*** to report on plans for or descriptions of final closure/plugging after use as an injection well. Check ***Conversion to a Non-Injection Well*** if the well is to be converted to something other than an injection well.

Provide a **NARRATIVE DESCRIPTION** of the work planned to be performed, or that was performed. The narrative should include a description of the main procedures planned or that occurred during the work activity. A service company report, daily report, or similar document may be attached if it includes all the requested information and is clear and legible.

For well reworks, include the following information: The reason for the well rework; depths of activity; type of activity; changes to injection well configuration, well casing, or cement behind casing; any plug added to the well and its depth; any newly drilled interval and its depth; method(s) to demonstrate that the well has mechanical integrity (as applicable); and any deviations from the approved rework plan (as applicable).

For a well plugging plan, include the following information: Reason for the well plugging; number of plugs placed, and their depths; materials used as plugs (e.g., cast iron bridge plug, cement, cement retainer); method to set plugs; and wait-on-cement times, if any. Also provide one or more cost estimates from an independent firm in the business of plugging and abandoning wells to plug the well as described in the plan.

For well plugging affidavit, include the following information: Reason for the well plugging; number of plugs placed, and their depths; materials used as plugs (e.g., cast iron bridge plug, cement, cement retainer); method to set plugs; wait-on-cement times, if any; and any deviations from the approved plugging plan (if applicable).

For conversion to a non-injection well, include the following information: Depths of activity; type of activity; changes to injection well configuration, well casing, or cement behind casing; any plug added to the well and its depth; any newly drilled interval and its depth; depths of new perforations; and method(s) to demonstrate that the well has mechanical integrity (as applicable).

For all of the above activities, include a well sketch depicting the work, results of well tests/logging performed, service company tickets, and any other available information demonstrating how the work was/is to be performed. Also, specify whether depths are below ground surface, relative to Kelly bushing, etc.

CERTIFICATION: This form must be signed and dated by either: a responsible corporate officer for a corporation, by a general partner for a partnership, by the proprietor of a sole proprietorship, or by a principal executive or ranking elected official for a public agency.

PAPERWORK REDUCTION ACT NOTICE: The public reporting and recordkeeping burden for this collection of information is estimated to average between 6.0 and 7.9 hours per response, depending on the injection well class. Burden means the total time, effort, or financial resource expended by persons to generate, maintain, retain, or disclose or provide information to or for a Federal Agency. This includes the time needed to review instructions; develop, acquire, install, and utilize technology and systems for the purposes of collecting, validating, and verifying information, processing and maintaining information, and disclosing and providing information; adjust the existing ways to comply with any previously applicable instructions and requirements; train personnel to be able to respond to the collection of information; search data sources; complete and review the collection of information; and, transmit or otherwise disclose the information. An agency may not conduct or sponsor, and a person is not required to respond to, a collection of information unless it displays a currently valid OMB control number. Send comments on the Agency's need for this information, the accuracy of the provided burden estimates, and any suggested methods for minimizing respondent burden, including the use of automated collection techniques to Director, Collection Strategies Division, U.S. Environmental Protection Agency (2822), 1200 Pennsylvania Ave., NW., Washington, D.C. 20460. Include the OMB control number in any correspondence. Do not send the completed forms to this address.

AS-BUILT COREHOLE MCC543

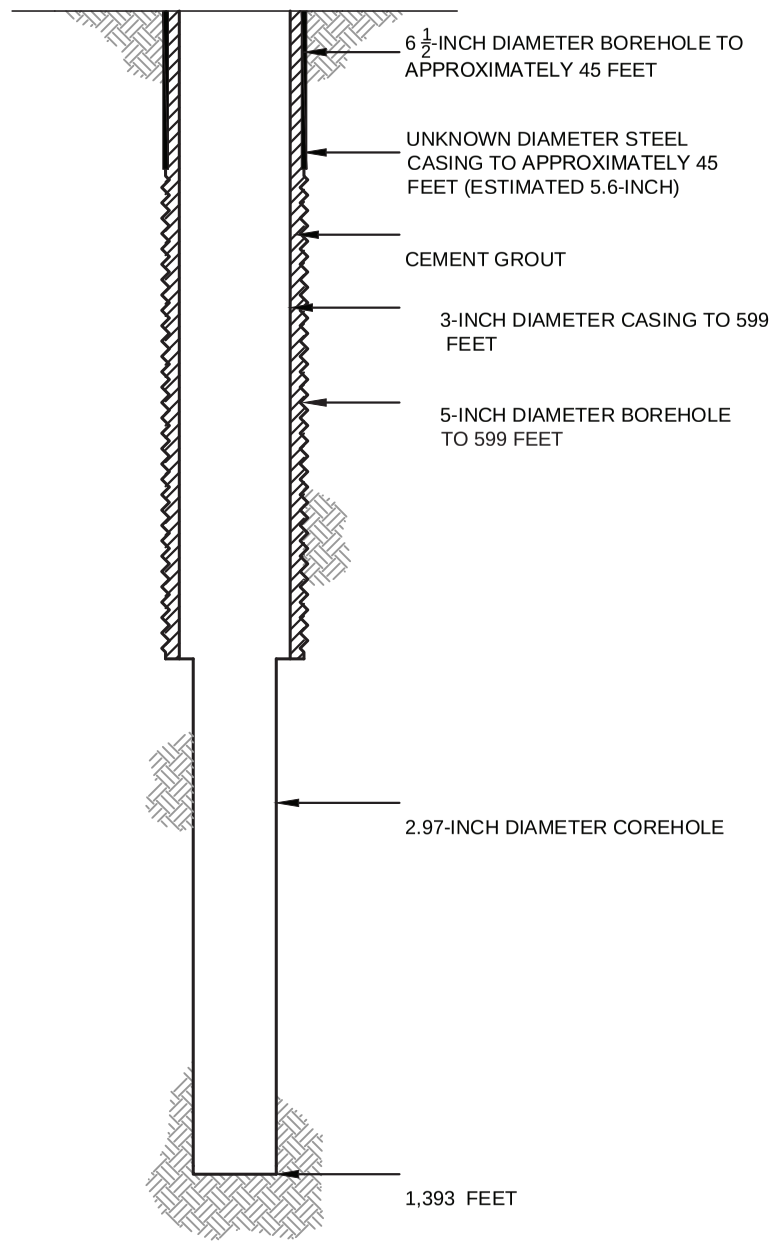

PROPOSED PLUGGING AND ABANDONMENT COREHOLE MCC543

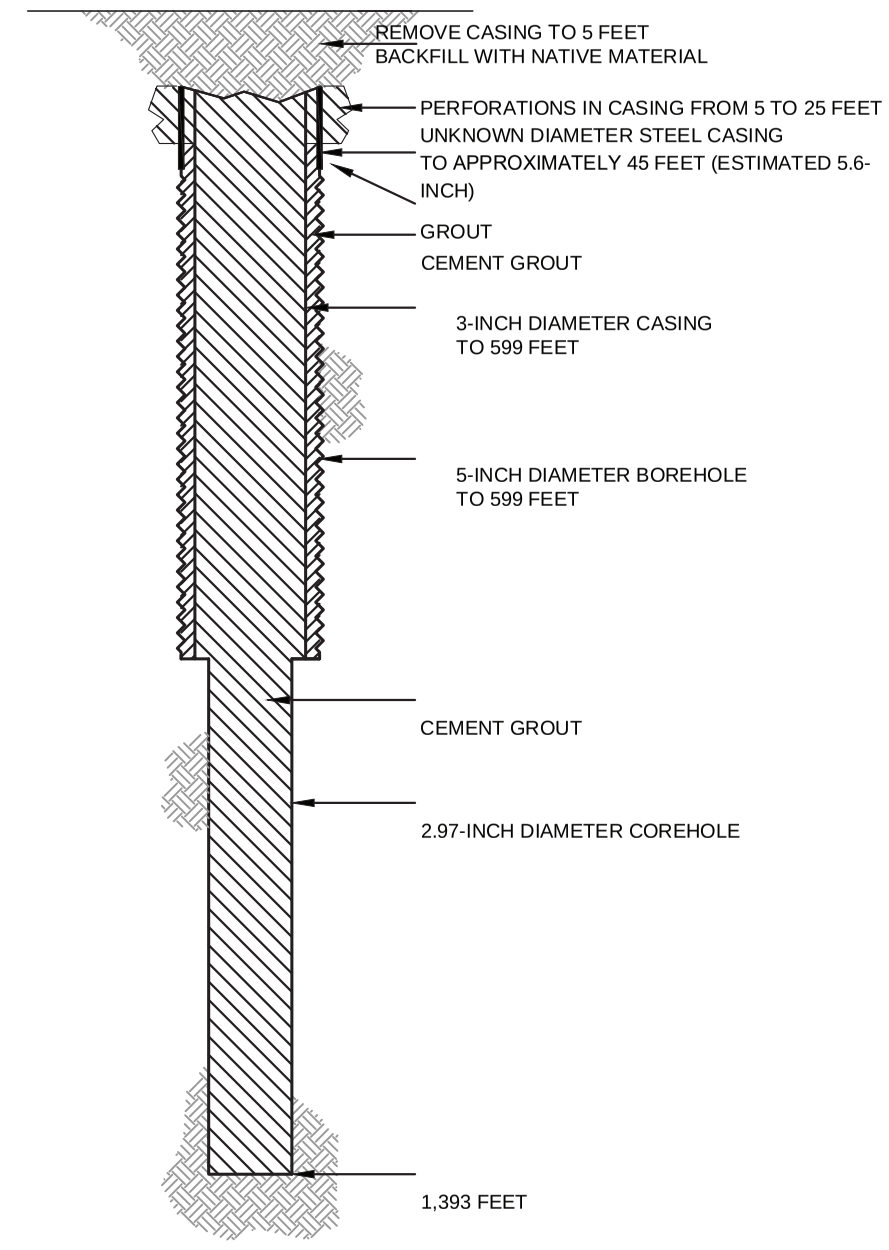

HALEY ALDRICH

FLORENCE COPPER, INC.
FLORENCE, ARIZONA

COREHOLE MCC543 DIAGRAM

FLORENCE COPPER INC.

NOT TO SCALE
SEPTEMBER 2019

FIGURE 1

MOBINI, GITA Printed: 4/21/2017 12:00 PM Layout: ABANDON (2)
\PROJECTS\CURIS RESOURCES38706-CURIS FEASIBILITY\DRAWINGS\EPA\WELL ABANDON\415S_ABANDON.DWG

OMB No. 2040-0042 Approval Expires 4/30/2022

United States Environmental Protection Agency

WELL REWORK RECORD, PLUGGING AND ABANDONMENT PLAN, OR PLUGGING AND ABANDONMENT AFFIDAVIT

Name and Address, Phone Number and/or Email of Permittee

Florence Copper Project
1575 W Hunt Hwy,
Florence, AZ 85132

Permit or EPA ID Number	API Number	Full Well Name
R9UIC-AZ3-FY11-1		MCC545

State	County
Arizona	Pinal

Locate well in two directions from nearest lines of quarter section and drilling unit

Latitude 33.05033545

Surface Location

NW **1/4 of** SW **1/4 of Section** 28 **Township** 4S **Range** 9E

Longitude -111.4347096

_____ **ft. from (N/S)** _____ **Line of quarter section**

_____ **ft. from (E/W)** _____ **Line of quarter section.**

Well Class	Timing of Action (pick one)	Type of Action (pick one)
☐ Class I ☐ Class II ☑ Class III ☐ Class V	☑ Notice Prior to Work Date Expected to Commence March 2021 ☐ Report After Work Date Work Ended	☐ Well Rework ☑ Plugging and Abandonment ☐ Conversion to a Non-Injection Well

Provide a narrative description of the work planned to be performed, or that was performed. Use additional pages as necessary. See instructions.

A workover rig capable of performing the required abandonment operations at the required depths will be moved in and set up over the core hole. The core hole will be inspected to determine the depth to which the hole remains open and if any obstructions are present in the core hole; the presence and condition of any existing collar will also be documented. If necessary, the core hole will be cleaned out to a depth of at least 100 feet below the bedrock-LBFU contact to enable placement of cement seals.

If collar is present, an attempt will be made to remove it. If removal of the collar is not feasible, it will be left in the hole and perforated as needed to allow an annular seal to be placed to a depth of at least 25 feet bgs. In areas of agricultural use, the surface casing will be cut at least 5 feet bgs and removed.

If the collar cannot be removed, it will be perforated from at least 20 feet below the bedrock-LBFU contact to at least 20 feet above the contact; from at least 20 feet below the base of the MFGU to at least 20 feet above the top of the MFGU; and from at least 25 feet bgs to 5 feet bgs.

A tremie pipe will be used to place Type V cement in the open core hole from the bottom of the core hole to the top of the core hole. Cement retainers, as described above, will be used to force cement grout into the annulus and behind perforated intervals, as necessary.

If the hole has been obstructed, as much cement as possible will be placed from 100 feet below the LBFU-bedrock contact to the top of the core hole.

The volume of Type V cement will be recorded and will not be less than the estimated volume of material required to fill each interval. All cement grout will consist of Type V cement, or equivalent approved in accordance with the UIC Permit.

Certification

I certify under the penalty of law that I have personally examined and am familiar with the information submitted in this document and all attachments and that, based on my inquiry of those individuals immediately responsible for obtaining the information, I believe that the information is true, accurate, and complete. I am aware that there are significant penalties for submitting false information, including the possibliity of fine and imprisonment. (Ref. 40 CFR § 144.32)

Name and Official Title *(Please type or print)*	Signature	Date Signed
Dan Johnson, VP - General Manager		10/3/2019

INSTRUCTIONS FOR FORM 7520-19

This form replaces forms 7520-12 and 7520-14. Use this form only when work is planned or has occurred that affects the well's construction or operation as an injection well, including work on the casing, tubing or packer (or for shallow Class V wells, the subsurface fluid emplacement network). Use one form per injection well. While reports or other information developed by contractors or service companies may be attached, this form must be signed by a responsible entity as described at 40 CFR 144.32. Note: operators closing Class V wells should use Form 7520-17.

NAME, ADDRESS, PHONE AND/OR EMAIL OF PERMITTEE: Enter the name and street address, city/town, state, and ZIP code of the permittee. Also provide an email address (if available) and/or a phone number.

PERMIT OR EPA ID NUMBER: Enter the well identification number or permit number assigned to the well by the EPA or the permitting authority.

API NUMBER: Enter the number assigned by the local jurisdiction (usually a State Oil and Gas Agency) using the American Petroleum Institute standard numbering system.

FULL WELL NAME: Enter the full name of the well or project.

Enter the **STATE** and **COUNTY** where the well is located. For States that do not have counties, use the name of that State's equivalent jurisdiction at a more local level.

WELL LOCATION: Fill in the complete township, range, and section to the nearest quarter-quarter section. A township is north or south of the baseline, and a range is east or west of the principal meridian (e.g., T12N, R34W). Also include the distance, in feet, from the nearest north or south line and nearest east or west line of the quarter-section. Also, enter the **latitude** and **longitude** of the well in decimal degrees, to five or six places if possible; be sure to include a negative sign for the longitude of a well in the Western Hemisphere and a negative sign for the latitude of a well in the Southern Hemisphere.

Enter the **WELL CLASS,** i.e., the class of injection well as defined in 40 CFR 144.6.

TIMING OF THE ACTION: Check ***Notice prior to work*** if the activity has not yet occurred (i.e., is planned). Check ***Report after work*** if the activity described has already occurred. As appropriate, include the date the activity is expected to start or the date the activity was completed. (Note this may not be available, e.g., for a plugging plan submitted with a permit application.)

TYPE OF ACTION: Check the appropriate box to describe the kind of activity being reported. Check ***Well Rework*** for work that was/will be performed on the well after it has already been in operation as an injection well. Check ***Plugging and Abandonment*** to report on plans for or descriptions of final closure/plugging after use as an injection well. Check ***Conversion to a Non-Injection Well*** if the well is to be converted to something other than an injection well.

Provide a **NARRATIVE DESCRIPTION** of the work planned to be performed, or that was performed. The narrative should include a description of the main procedures planned or that occurred during the work activity. A service company report, daily report, or similar document may be attached if it includes all the requested information and is clear and legible.

For well reworks, include the following information: The reason for the well rework; depths of activity; type of activity; changes to injection well configuration, well casing, or cement behind casing; any plug added to the well and its depth; any newly drilled interval and its depth; method(s) to demonstrate that the well has mechanical integrity (as applicable); and any deviations from the approved rework plan (as applicable).

For a well plugging plan, include the following information: Reason for the well plugging; number of plugs placed, and their depths; materials used as plugs (e.g., cast iron bridge plug, cement, cement retainer); method to set plugs; and wait-on-cement times, if any. Also provide one or more cost estimates from an independent firm in the business of plugging and abandoning wells to plug the well as described in the plan.

For well plugging affidavit, include the following information: Reason for the well plugging; number of plugs placed, and their depths; materials used as plugs (e.g., cast iron bridge plug, cement, cement retainer); method to set plugs; wait-on-cement times, if any; and any deviations from the approved plugging plan (if applicable).

For conversion to a non-injection well, include the following information: Depths of activity; type of activity; changes to injection well configuration, well casing, or cement behind casing; any plug added to the well and its depth; any newly drilled interval and its depth; depths of new perforations; and method(s) to demonstrate that the well has mechanical integrity (as applicable).

For all of the above activities, include a well sketch depicting the work, results of well tests/logging performed, service company tickets, and any other available information demonstrating how the work was/is to be performed. Also, specify whether depths are below ground surface, relative to Kelly bushing, etc.

CERTIFICATION: This form must be signed and dated by either: a responsible corporate officer for a corporation, by a general partner for a partnership, by the proprietor of a sole proprietorship, or by a principal executive or ranking elected official for a public agency.

PAPERWORK REDUCTION ACT NOTICE: The public reporting and recordkeeping burden for this collection of information is estimated to average between 6.0 and 7.9 hours per response, depending on the injection well class. Burden means the total time, effort, or financial resource expended by persons to generate, maintain, retain, or disclose or provide information to or for a Federal Agency. This includes the time needed to review instructions; develop, acquire, install, and utilize technology and systems for the purposes of collecting, validating, and verifying information, processing and maintaining information, and disclosing and providing information; adjust the existing ways to comply with any previously applicable instructions and requirements; train personnel to be able to respond to the collection of information; search data sources; complete and review the collection of information; and, transmit or otherwise disclose the information. An agency may not conduct or sponsor, and a person is not required to respond to, a collection of information unless it displays a currently valid OMB control number. Send comments on the Agency's need for this information, the accuracy of the provided burden estimates, and any suggested methods for minimizing respondent burden, including the use of automated collection techniques to Director, Collection Strategies Division, U.S. Environmental Protection Agency (2822), 1200 Pennsylvania Ave., NW., Washington, D.C. 20460. Include the OMB control number in any correspondence. Do not send the completed forms to this address.

AS-BUILT COREHOLE MCC545

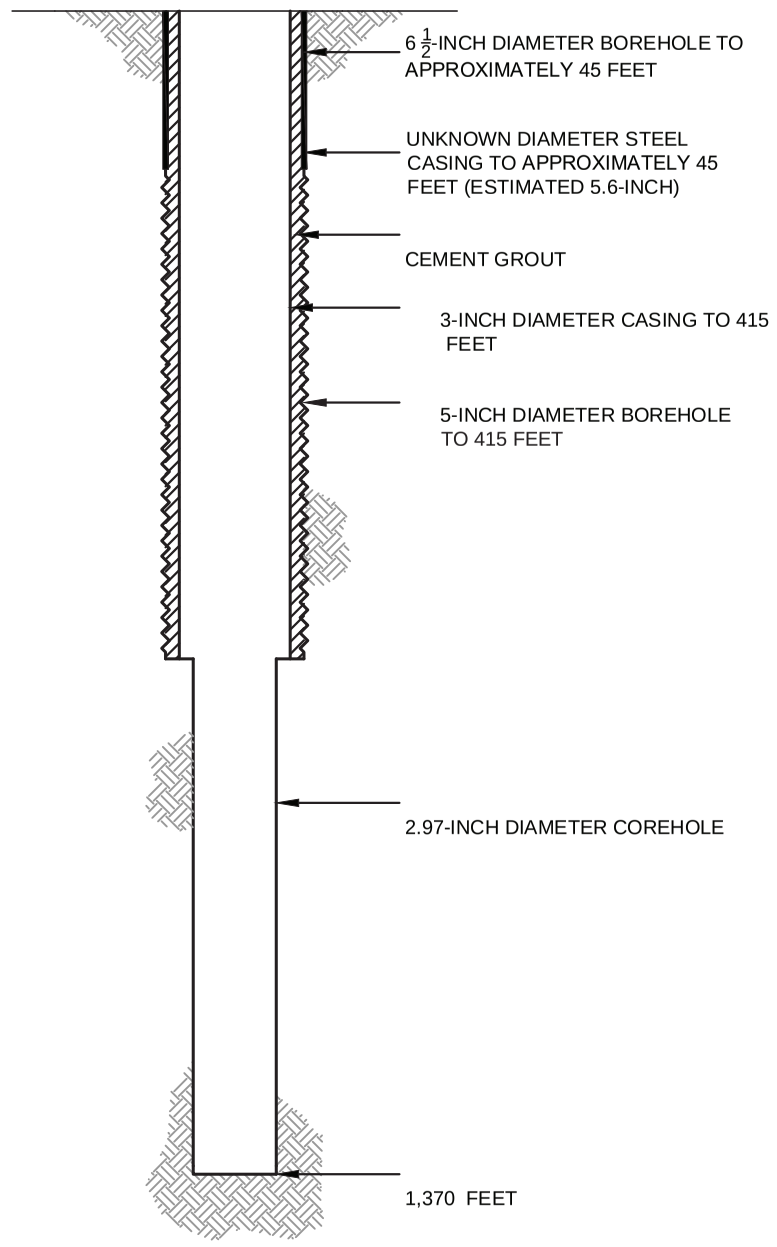

PROPOSED PLUGGING AND ABANDONMENT COREHOLE MCC545

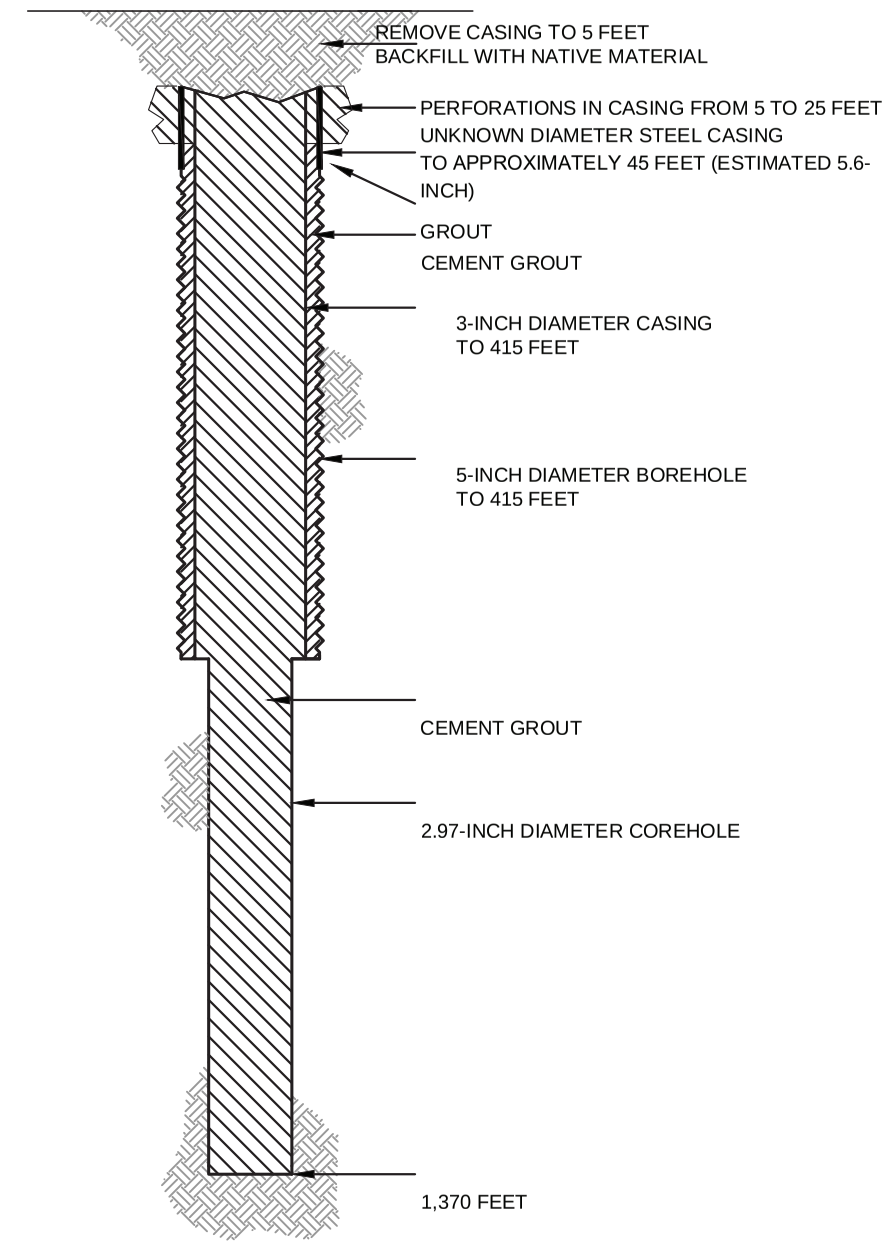

HALEY ALDRICH

FLORENCE COPPER, INC.
FLORENCE, ARIZONA

COREHOLE MCC545 DIAGRAM

FLORENCE COPPER INC.

NOT TO SCALE
SEPTEMBER 2019

FIGURE 1

MOBINI, GITA Printed: 4/21/2017 12:00 PM Layout: ABANDON (2)
\PROJECTS\CURIS RESOURCES38706-CURIS FEASIBILITY\DRAWINGS\EPA\WELL ABANDON\415S_ABANDON.DWG

OMB No. 2040-0042 Approval Expires 4/30/2022

United States Environmental Protection Agency

WELL REWORK RECORD, PLUGGING AND ABANDONMENT PLAN, OR PLUGGING AND ABANDONMENT AFFIDAVIT

Name and Address, Phone Number and/or Email of Permittee

Florence Copper Project
1575 W Hunt Hwy,
Florence, AZ 85132

Permit or EPA ID Number	API Number	Full Well Name
R9UIC-AZ3-FY11-1		MCC546

State	County
Arizona	Pinal

Locate well in two directions from nearest lines of quarter section and drilling unit

Surface Location

NW 1/4 of SW 1/4 of Section 28 Township 4S Range 9E

Latitude 33.05154617

Longitude -111.4342007

ft. from (N/S) Line of quarter section

ft. from (E/W) Line of quarter section.

Well Class	Timing of Action (pick one)	Type of Action (pick one)
☐ Class I ☐ Class II ☑ Class III ☐ Class V	☑ Notice Prior to Work Date Expected to Commence March 2021 ☐ Report After Work Date Work Ended	☐ Well Rework ☑ Plugging and Abandonment ☐ Conversion to a Non-Injection Well

Provide a narrative description of the work planned to be performed, or that was performed. Use additional pages as necessary. See instructions.

A workover rig capable of performing the required abandonment operations at the required depths will be moved in and set up over the core hole. The core hole will be inspected to determine the depth to which the hole remains open and if any obstructions are present in the core hole; the presence and condition of any existing collar will also be documented. If necessary, the core hole will be cleaned out to a depth of at least 100 feet below the bedrock-LBFU contact to enable placement of cement seals.

If collar is present, an attempt will be made to remove it. If removal of the collar is not feasible, it will be left in the hole and perforated as needed to allow an annular seal to be placed to a depth of at least 25 feet bgs. In areas of agricultural use, the surface casing will be cut at least 5 feet bgs and removed.

If the collar cannot be removed, it will be perforated from at least 20 feet below the bedrock-LBFU contact to at least 20 feet above the contact; from at least 20 feet below the base of the MFGU to at least 20 feet above the top of the MFGU; and from at least 25 feet bgs to 5 feet bgs.

A tremie pipe will be used to place Type V cement in the open core hole from the bottom of the core hole to the top of the core hole. Cement retainers, as described above, will be used to force cement grout into the annulus and behind perforated intervals, as necessary.

If the hole has been obstructed, as much cement as possible will be placed from 100 feet below the LBFU-bedrock contact to the top of the core hole.

The volume of Type V cement will be recorded and will not be less than the estimated volume of material required to fill each interval. All cement grout will consist of Type V cement, or equivalent approved in accordance with the UIC Permit.

Certification

I certify under the penalty of law that I have personally examined and am familiar with the information submitted in this document and all attachments and that, based on my inquiry of those individuals immediately responsible for obtaining the information, I believe that the information is true, accurate, and complete. I am aware that there are significant penalties for submitting false information, including the possibliity of fine and imprisonment. (Ref. 40 CFR § 144.32)

Name and Official Title *(Please type or print)*	Signature	Date Signed
Dan Johnson, VP - General Manager		10/3/2019

INSTRUCTIONS FOR FORM 7520-19

This form replaces forms 7520-12 and 7520-14. Use this form only when work is planned or has occurred that affects the well's construction or operation as an injection well, including work on the casing, tubing or packer (or for shallow Class V wells, the subsurface fluid emplacement network). Use one form per injection well. While reports or other information developed by contractors or service companies may be attached, this form must be signed by a responsible entity as described at 40 CFR 144.32. Note: operators closing Class V wells should use Form 7520-17.

NAME, ADDRESS, PHONE AND/OR EMAIL OF PERMITTEE: Enter the name and street address, city/town, state, and ZIP code of the permittee. Also provide an email address (if available) and/or a phone number.

PERMIT OR EPA ID NUMBER: Enter the well identification number or permit number assigned to the well by the EPA or the permitting authority.

API NUMBER: Enter the number assigned by the local jurisdiction (usually a State Oil and Gas Agency) using the American Petroleum Institute standard numbering system.

FULL WELL NAME: Enter the full name of the well or project.

Enter the **STATE** and **COUNTY** where the well is located. For States that do not have counties, use the name of that State's equivalent jurisdiction at a more local level.

WELL LOCATION: Fill in the complete township, range, and section to the nearest quarter-quarter section. A township is north or south of the baseline, and a range is east or west of the principal meridian (e.g., T12N, R34W). Also include the distance, in feet, from the nearest north or south line and nearest east or west line of the quarter-section. Also, enter the **latitude** and **longitude** of the well in decimal degrees, to five or six places if possible; be sure to include a negative sign for the longitude of a well in the Western Hemisphere and a negative sign for the latitude of a well in the Southern Hemisphere.

Enter the **WELL CLASS,** i.e., the class of injection well as defined in 40 CFR 144.6.

TIMING OF THE ACTION: Check ***Notice prior to work*** if the activity has not yet occurred (i.e., is planned). Check ***Report after work*** if the activity described has already occurred. As appropriate, include the date the activity is expected to start or the date the activity was completed. (Note this may not be available, e.g., for a plugging plan submitted with a permit application.)

TYPE OF ACTION: Check the appropriate box to describe the kind of activity being reported. Check ***Well Rework*** for work that was/will be performed on the well after it has already been in operation as an injection well. Check ***Plugging and Abandonment*** to report on plans for or descriptions of final closure/plugging after use as an injection well. Check ***Conversion to a Non-Injection Well*** if the well is to be converted to something other than an injection well.

Provide a **NARRATIVE DESCRIPTION** of the work planned to be performed, or that was performed. The narrative should include a description of the main procedures planned or that occurred during the work activity. A service company report, daily report, or similar document may be attached if it includes all the requested information and is clear and legible.

For well reworks, include the following information: The reason for the well rework; depths of activity; type of activity; changes to injection well configuration, well casing, or cement behind casing; any plug added to the well and its depth; any newly drilled interval and its depth; method(s) to demonstrate that the well has mechanical integrity (as applicable); and any deviations from the approved rework plan (as applicable).

For a well plugging plan, include the following information: Reason for the well plugging; number of plugs placed, and their depths; materials used as plugs (e.g., cast iron bridge plug, cement, cement retainer); method to set plugs; and wait-on-cement times, if any. Also provide one or more cost estimates from an independent firm in the business of plugging and abandoning wells to plug the well as described in the plan.

For well plugging affidavit, include the following information: Reason for the well plugging; number of plugs placed, and their depths; materials used as plugs (e.g., cast iron bridge plug, cement, cement retainer); method to set plugs; wait-on-cement times, if any; and any deviations from the approved plugging plan (if applicable).

For conversion to a non-injection well, include the following information: Depths of activity; type of activity; changes to injection well configuration, well casing, or cement behind casing; any plug added to the well and its depth; any newly drilled interval and its depth; depths of new perforations; and method(s) to demonstrate that the well has mechanical integrity (as applicable).

For all of the above activities, include a well sketch depicting the work, results of well tests/logging performed, service company tickets, and any other available information demonstrating how the work was/is to be performed. Also, specify whether depths are below ground surface, relative to Kelly bushing, etc.

CERTIFICATION: This form must be signed and dated by either: a responsible corporate officer for a corporation, by a general partner for a partnership, by the proprietor of a sole proprietorship, or by a principal executive or ranking elected official for a public agency.

PAPERWORK REDUCTION ACT NOTICE: The public reporting and recordkeeping burden for this collection of information is estimated to average between 6.0 and 7.9 hours per response, depending on the injection well class. Burden means the total time, effort, or financial resource expended by persons to generate, maintain, retain, or disclose or provide information to or for a Federal Agency. This includes the time needed to review instructions; develop, acquire, install, and utilize technology and systems for the purposes of collecting, validating, and verifying information, processing and maintaining information, and disclosing and providing information; adjust the existing ways to comply with any previously applicable instructions and requirements; train personnel to be able to respond to the collection of information; search data sources; complete and review the collection of information; and, transmit or otherwise disclose the information. An agency may not conduct or sponsor, and a person is not required to respond to, a collection of information unless it displays a currently valid OMB control number. Send comments on the Agency's need for this information, the accuracy of the provided burden estimates, and any suggested methods for minimizing respondent burden, including the use of automated collection techniques to Director, Collection Strategies Division, U.S. Environmental Protection Agency (2822), 1200 Pennsylvania Ave., NW., Washington, D.C. 20460. Include the OMB control number in any correspondence. Do not send the completed forms to this address.

AS-BUILT COREHOLE MCC546

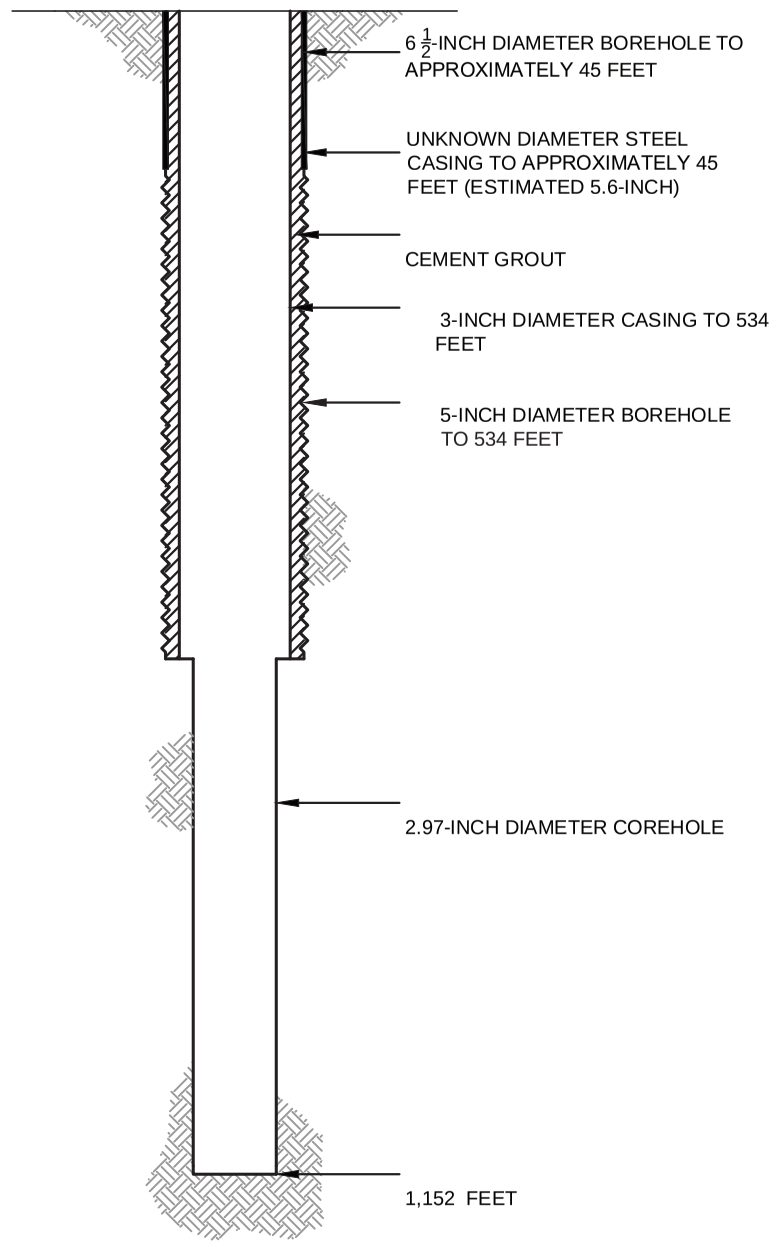

PROPOSED PLUGGING AND ABANDONMENT COREHOLE MCC546

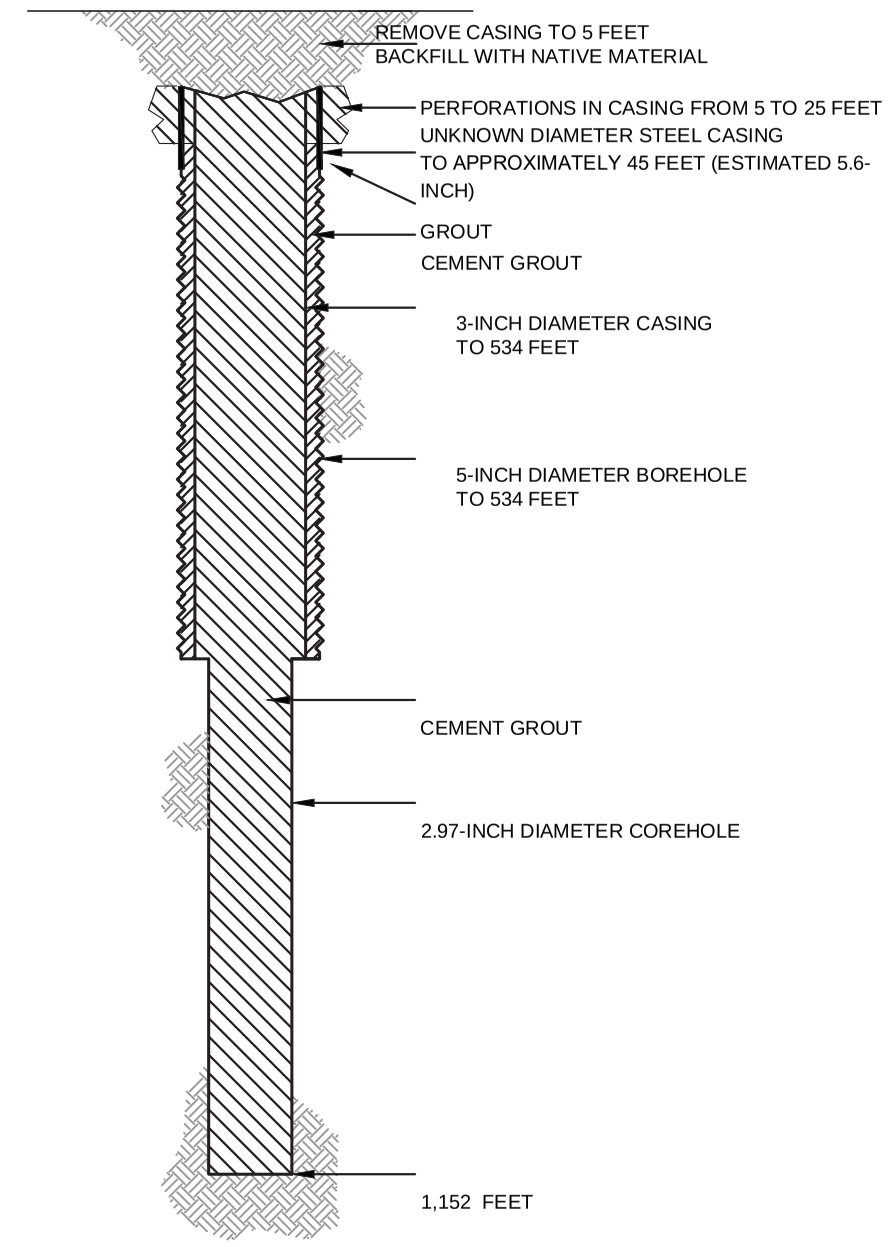

HALEY ALDRICH

FLORENCE COPPER, INC.
FLORENCE, ARIZONA

COREHOLE MCC546 DIAGRAM

FLORENCE COPPER INC.

NOT TO SCALE
SEPTEMBER 2019

FIGURE 1

MOBINI, GITA Printed: 4/21/2017 12:00 PM Layout: ABANDON (2)
\PROJECTS\CURIS RESOURCES38706-CURIS FEASIBILITY\DRAWINGS\EPA\WELL ABANDON\415S_ABANDON.DWG

OMB No. 2040-0042 Approval Expires 4/30/2022

United States Environmental Protection Agency

WELL REWORK RECORD, PLUGGING AND ABANDONMENT PLAN, OR PLUGGING AND ABANDONMENT AFFIDAVIT

Name and Address, Phone Number and/or Email of Permittee

Florence Copper Project
1575 W Hunt Hwy,
Florence, AZ 85132

Permit or EPA ID Number	API Number	Full Well Name
R9UIC-AZ3-FY11-1		MCC546A

State	County
Arizona	Pinal

Locate well in two directions from nearest lines of quarter section and drilling unit

Latitude 33.05156859

Surface Location

NE **1/4 of** SW **1/4 of Section** 28 **Township** 4S **Range** 9E

Longitude -111.4341696

_____ **ft. from (N/S)** _____ **Line of quarter section**

_____ **ft. from (E/W)** _____ **Line of quarter section.**

Well Class	Timing of Action (pick one)	Type of Action (pick one)
☐ Class I ☐ Class II ☑ Class III ☐ Class V	☑ Notice Prior to Work Date Expected to Commence March 2021 ☐ Report After Work Date Work Ended	☐ Well Rework ☑ Plugging and Abandonment ☐ Conversion to a Non-Injection Well

Provide a narrative description of the work planned to be performed, or that was performed. Use additional pages as necessary. See instructions.

A workover rig capable of performing the required abandonment operations at the required depths will be moved in and set up over the core hole. The core hole will be inspected to determine the depth to which the hole remains open and if any obstructions are present in the core hole; the presence and condition of any existing collar will also be documented. If necessary, the core hole will be cleaned out to a depth of at least 100 feet below the bedrock-LBFU contact to enable placement of cement seals.

If collar is present, an attempt will be made to remove it. If removal of the collar is not feasible, it will be left in the hole and perforated as needed to allow an annular seal to be placed to a depth of at least 25 feet bgs. In areas of agricultural use, the surface casing will be cut at least 5 feet bgs and removed.

If the collar cannot be removed, it will be perforated from at least 20 feet below the bedrock-LBFU contact to at least 20 feet above the contact; from at least 20 feet below the base of the MFGU to at least 20 feet above the top of the MFGU; and from at least 25 feet bgs to 5 feet bgs.

A tremie pipe will be used to place Type V cement in the open core hole from the bottom of the core hole to the top of the core hole. Cement retainers, as described above, will be used to force cement grout into the annulus and behind perforated intervals, as necessary.

If the hole has been obstructed, as much cement as possible will be placed from 100 feet below the LBFU-bedrock contact to the top of the core hole.

The volume of Type V cement will be recorded and will not be less than the estimated volume of material required to fill each interval. All cement grout will consist of Type V cement, or equivalent approved in accordance with the UIC Permit.

Certification

I certify under the penalty of law that I have personally examined and am familiar with the information submitted in this document and all attachments and that, based on my inquiry of those individuals immediately responsible for obtaining the information, I believe that the information is true, accurate, and complete. I am aware that there are significant penalties for submitting false information, including the possibliity of fine and imprisonment. (Ref. 40 CFR § 144.32)

Name and Official Title *(Please type or print)*	Signature	Date Signed
Dan Johnson, VP - General Manager		10/3/2019

INSTRUCTIONS FOR FORM 7520-19

This form replaces forms 7520-12 and 7520-14. Use this form only when work is planned or has occurred that affects the well's construction or operation as an injection well, including work on the casing, tubing or packer (or for shallow Class V wells, the subsurface fluid emplacement network). Use one form per injection well. While reports or other information developed by contractors or service companies may be attached, this form must be signed by a responsible entity as described at 40 CFR 144.32. Note: operators closing Class V wells should use Form 7520-17.

NAME, ADDRESS, PHONE AND/OR EMAIL OF PERMITTEE: Enter the name and street address, city/town, state, and ZIP code of the permittee. Also provide an email address (if available) and/or a phone number.

PERMIT OR EPA ID NUMBER: Enter the well identification number or permit number assigned to the well by the EPA or the permitting authority.

API NUMBER: Enter the number assigned by the local jurisdiction (usually a State Oil and Gas Agency) using the American Petroleum Institute standard numbering system.

FULL WELL NAME: Enter the full name of the well or project.

Enter the **STATE** and **COUNTY** where the well is located. For States that do not have counties, use the name of that State's equivalent jurisdiction at a more local level.

WELL LOCATION: Fill in the complete township, range, and section to the nearest quarter-quarter section. A township is north or south of the baseline, and a range is east or west of the principal meridian (e.g., T12N, R34W). Also include the distance, in feet, from the nearest north or south line and nearest east or west line of the quarter-section. Also, enter the **latitude** and **longitude** of the well in decimal degrees, to five or six places if possible; be sure to include a negative sign for the longitude of a well in the Western Hemisphere and a negative sign for the latitude of a well in the Southern Hemisphere.

Enter the **WELL CLASS,** i.e., the class of injection well as defined in 40 CFR 144.6.

TIMING OF THE ACTION: Check ***Notice prior to work*** if the activity has not yet occurred (i.e., is planned). Check ***Report after work*** if the activity described has already occurred. As appropriate, include the date the activity is expected to start or the date the activity was completed. (Note this may not be available, e.g., for a plugging plan submitted with a permit application.)

TYPE OF ACTION: Check the appropriate box to describe the kind of activity being reported. Check ***Well Rework*** for work that was/will be performed on the well after it has already been in operation as an injection well. Check ***Plugging and Abandonment*** to report on plans for or descriptions of final closure/plugging after use as an injection well. Check ***Conversion to a Non-Injection Well*** if the well is to be converted to something other than an injection well.

Provide a **NARRATIVE DESCRIPTION** of the work planned to be performed, or that was performed. The narrative should include a description of the main procedures planned or that occurred during the work activity. A service company report, daily report, or similar document may be attached if it includes all the requested information and is clear and legible.

For well reworks, include the following information: The reason for the well rework; depths of activity; type of activity; changes to injection well configuration, well casing, or cement behind casing; any plug added to the well and its depth; any newly drilled interval and its depth; method(s) to demonstrate that the well has mechanical integrity (as applicable); and any deviations from the approved rework plan (as applicable).

For a well plugging plan, include the following information: Reason for the well plugging; number of plugs placed, and their depths; materials used as plugs (e.g., cast iron bridge plug, cement, cement retainer); method to set plugs; and wait-on-cement times, if any. Also provide one or more cost estimates from an independent firm in the business of plugging and abandoning wells to plug the well as described in the plan.

For well plugging affidavit, include the following information: Reason for the well plugging; number of plugs placed, and their depths; materials used as plugs (e.g., cast iron bridge plug, cement, cement retainer); method to set plugs; wait-on-cement times, if any; and any deviations from the approved plugging plan (if applicable).

For conversion to a non-injection well, include the following information: Depths of activity; type of activity; changes to injection well configuration, well casing, or cement behind casing; any plug added to the well and its depth; any newly drilled interval and its depth; depths of new perforations; and method(s) to demonstrate that the well has mechanical integrity (as applicable).

For all of the above activities, include a well sketch depicting the work, results of well tests/logging performed, service company tickets, and any other available information demonstrating how the work was/is to be performed. Also, specify whether depths are below ground surface, relative to Kelly bushing, etc.

CERTIFICATION: This form must be signed and dated by either: a responsible corporate officer for a corporation, by a general partner for a partnership, by the proprietor of a sole proprietorship, or by a principal executive or ranking elected official for a public agency.

PAPERWORK REDUCTION ACT NOTICE: The public reporting and recordkeeping burden for this collection of information is estimated to average between 6.0 and 7.9 hours per response, depending on the injection well class. Burden means the total time, effort, or financial resource expended by persons to generate, maintain, retain, or disclose or provide information to or for a Federal Agency. This includes the time needed to review instructions; develop, acquire, install, and utilize technology and systems for the purposes of collecting, validating, and verifying information, processing and maintaining information, and disclosing and providing information; adjust the existing ways to comply with any previously applicable instructions and requirements; train personnel to be able to respond to the collection of information; search data sources; complete and review the collection of information; and, transmit or otherwise disclose the information. An agency may not conduct or sponsor, and a person is not required to respond to, a collection of information unless it displays a currently valid OMB control number. Send comments on the Agency's need for this information, the accuracy of the provided burden estimates, and any suggested methods for minimizing respondent burden, including the use of automated collection techniques to Director, Collection Strategies Division, U.S. Environmental Protection Agency (2822), 1200 Pennsylvania Ave., NW., Washington, D.C. 20460. Include the OMB control number in any correspondence. Do not send the completed forms to this address.

AS-BUILT COREHOLE MCC546A

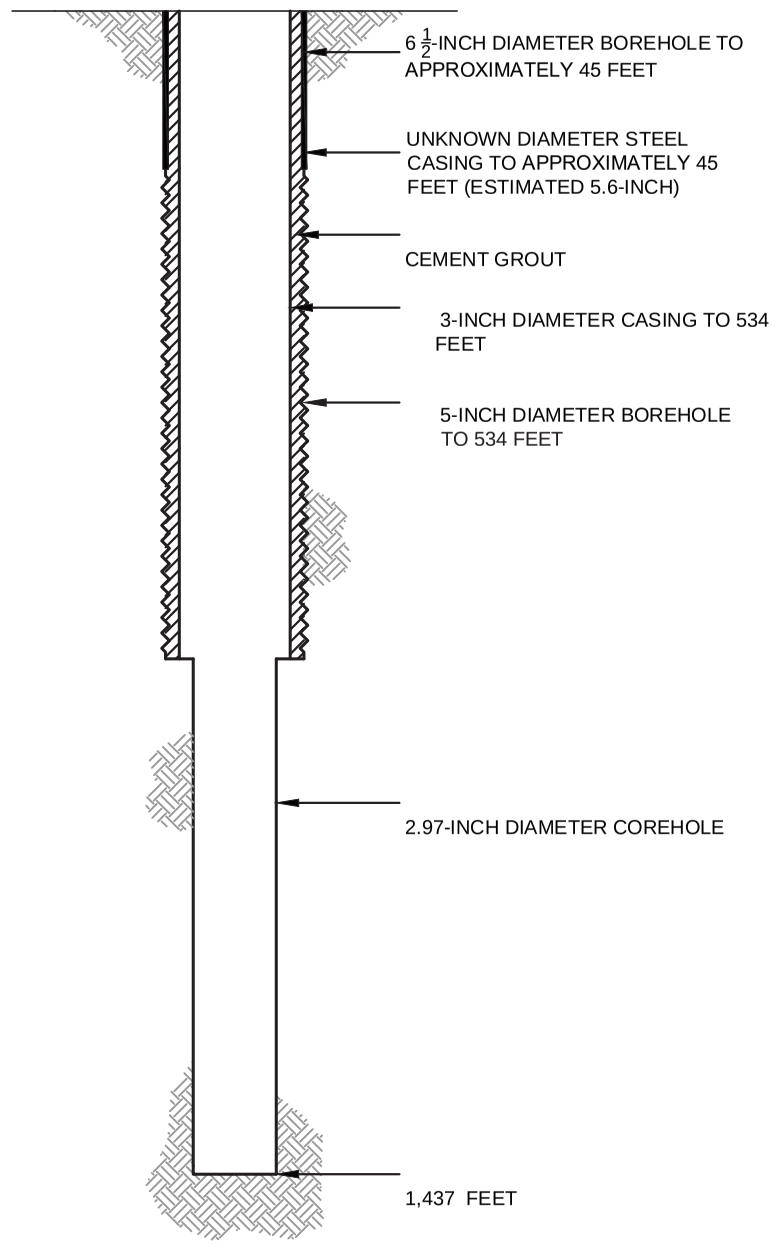

PROPOSED PLUGGING AND ABANDONMENT COREHOLE MCC546A

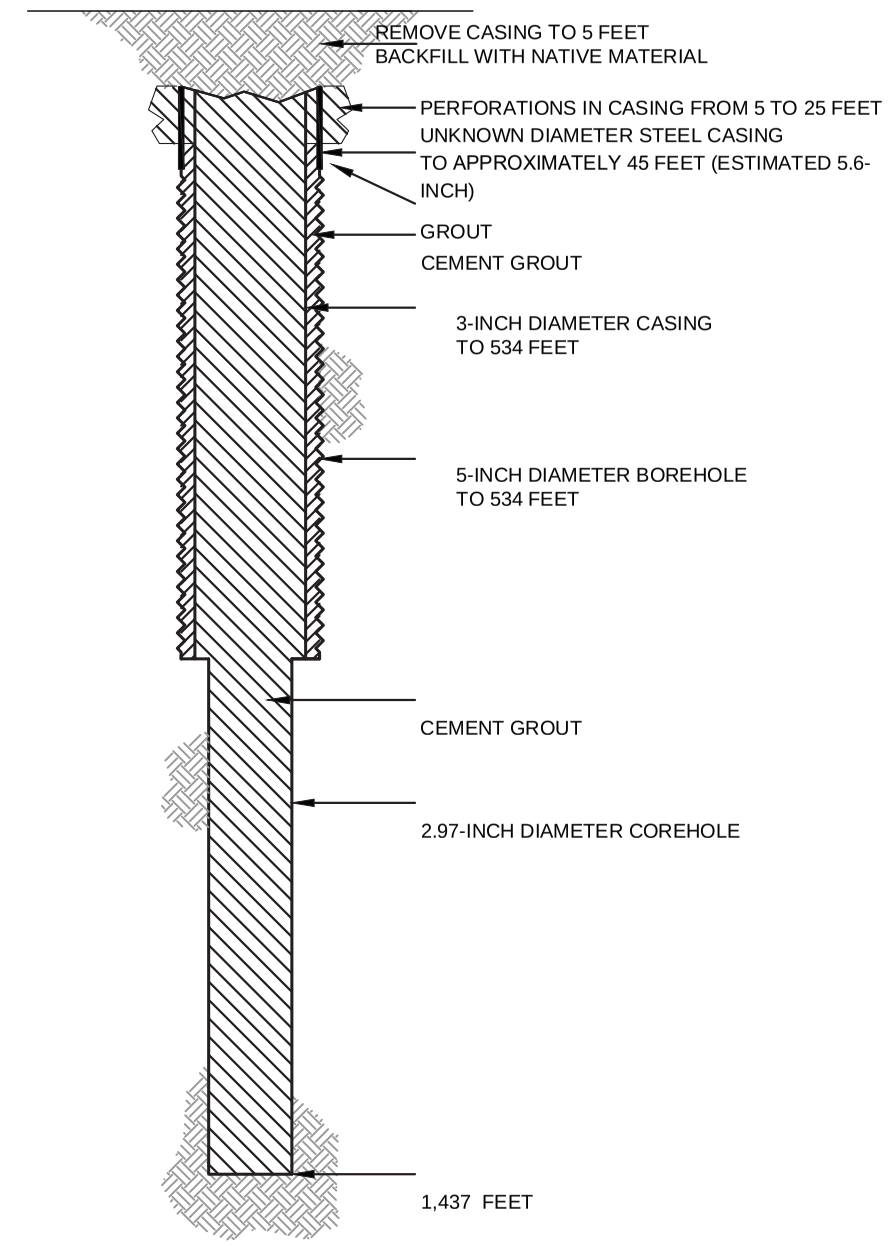

HALEY ALDRICH

FLORENCE COPPER, INC.
FLORENCE, ARIZONA

COREHOLE MCC546A DIAGRAM

FLORENCE COPPER INC.

NOT TO SCALE
SEPTEMBER 2019

FIGURE 1

MOBINI, GITA Printed: 4/21/2017 12:00 PM Layout: ABANDON (2)
\PROJECTS\CURIS RESOURCES38706-CURIS FEASIBILITY\DRAWINGS\EPA\WELL ABANDON\415S_ABANDON.DWG

OMB No. 2040-0042 Approval Expires 4/30/2022

United States Environmental Protection Agency

WELL REWORK RECORD, PLUGGING AND ABANDONMENT PLAN, OR PLUGGING AND ABANDONMENT AFFIDAVIT

Name and Address, Phone Number and/or Email of Permittee

Florence Copper Project
1575 W Hunt Hwy,
Florence, AZ 85132

Permit or EPA ID Number	API Number	Full Well Name
R9UIC-AZ3-FY11-1		MCC549

State	County
Arizona	Pinal

Locate well in two directions from nearest lines of quarter section and drilling unit

Latitude 33.04824141

Longitude -111.4328262

Surface Location

SE **1/4 of** SW **1/4 of Section** 28 **Township** 4S **Range** 9E

_____ **ft. from (N/S)** _____ **Line of quarter section**

_____ **ft. from (E/W)** _____ **Line of quarter section.**

Well Class	Timing of Action (pick one)	Type of Action (pick one)
☐ Class I ☐ Class II ☑ Class III ☐ Class V	☑ Notice Prior to Work Date Expected to Commence March 2021 ☐ Report After Work Date Work Ended	☐ Well Rework ☑ Plugging and Abandonment ☐ Conversion to a Non-Injection Well

Provide a narrative description of the work planned to be performed, or that was performed. Use additional pages as necessary. See instructions.

A workover rig capable of performing the required abandonment operations at the required depths will be moved in and set up over the core hole. The core hole will be inspected to determine the depth to which the hole remains open and if any obstructions are present in the core hole; the presence and condition of any existing collar will also be documented. If necessary, the core hole will be cleaned out to a depth of at least 100 feet below the bedrock-LBFU contact to enable placement of cement seals.

If collar is present, an attempt will be made to remove it. If removal of the collar is not feasible, it will be left in the hole and perforated as needed to allow an annular seal to be placed to a depth of at least 25 feet bgs. In areas of agricultural use, the surface casing will be cut at least 5 feet bgs and removed.

If the collar cannot be removed, it will be perforated from at least 20 feet below the bedrock-LBFU contact to at least 20 feet above the contact; from at least 20 feet below the base of the MFGU to at least 20 feet above the top of the MFGU; and from at least 25 feet bgs to 5 feet bgs.

A tremie pipe will be used to place Type V cement in the open core hole from the bottom of the core hole to the top of the core hole. Cement retainers, as described above, will be used to force cement grout into the annulus and behind perforated intervals, as necessary.

If the hole has been obstructed, as much cement as possible will be placed from 100 feet below the LBFU-bedrock contact to the top of the core hole.

The volume of Type V cement will be recorded and will not be less than the estimated volume of material required to fill each interval. All cement grout will consist of Type V cement, or equivalent approved in accordance with the UIC Permit.

Certification

I certify under the penalty of law that I have personally examined and am familiar with the information submitted in this document and all attachments and that, based on my inquiry of those individuals immediately responsible for obtaining the information, I believe that the information is true, accurate, and complete. I am aware that there are significant penalties for submitting false information, including the possibliity of fine and imprisonment. (Ref. 40 CFR § 144.32)

Name and Official Title *(Please type or print)*	Signature	Date Signed
Dan Johnson, VP - General Manager		10/3/2019

INSTRUCTIONS FOR FORM 7520-19

This form replaces forms 7520-12 and 7520-14. Use this form only when work is planned or has occurred that affects the well's construction or operation as an injection well, including work on the casing, tubing or packer (or for shallow Class V wells, the subsurface fluid emplacement network). Use one form per injection well. While reports or other information developed by contractors or service companies may be attached, this form must be signed by a responsible entity as described at 40 CFR 144.32. Note: operators closing Class V wells should use Form 7520-17.

NAME, ADDRESS, PHONE AND/OR EMAIL OF PERMITTEE: Enter the name and street address, city/town, state, and ZIP code of the permittee. Also provide an email address (if available) and/or a phone number.

PERMIT OR EPA ID NUMBER: Enter the well identification number or permit number assigned to the well by the EPA or the permitting authority.

API NUMBER: Enter the number assigned by the local jurisdiction (usually a State Oil and Gas Agency) using the American Petroleum Institute standard numbering system.

FULL WELL NAME: Enter the full name of the well or project.

Enter the **STATE** and **COUNTY** where the well is located. For States that do not have counties, use the name of that State's equivalent jurisdiction at a more local level.

WELL LOCATION: Fill in the complete township, range, and section to the nearest quarter-quarter section. A township is north or south of the baseline, and a range is east or west of the principal meridian (e.g., T12N, R34W). Also include the distance, in feet, from the nearest north or south line and nearest east or west line of the quarter-section. Also, enter the **latitude** and **longitude** of the well in decimal degrees, to five or six places if possible; be sure to include a negative sign for the longitude of a well in the Western Hemisphere and a negative sign for the latitude of a well in the Southern Hemisphere.

Enter the **WELL CLASS,** i.e., the class of injection well as defined in 40 CFR 144.6.

TIMING OF THE ACTION: Check ***Notice prior to work*** if the activity has not yet occurred (i.e., is planned). Check ***Report after work*** if the activity described has already occurred. As appropriate, include the date the activity is expected to start or the date the activity was completed. (Note this may not be available, e.g., for a plugging plan submitted with a permit application.)

TYPE OF ACTION: Check the appropriate box to describe the kind of activity being reported. Check ***Well Rework*** for work that was/will be performed on the well after it has already been in operation as an injection well. Check ***Plugging and Abandonment*** to report on plans for or descriptions of final closure/plugging after use as an injection well. Check ***Conversion to a Non-Injection Well*** if the well is to be converted to something other than an injection well.

Provide a **NARRATIVE DESCRIPTION** of the work planned to be performed, or that was performed. The narrative should include a description of the main procedures planned or that occurred during the work activity. A service company report, daily report, or similar document may be attached if it includes all the requested information and is clear and legible.

For well reworks, include the following information: The reason for the well rework; depths of activity; type of activity; changes to injection well configuration, well casing, or cement behind casing; any plug added to the well and its depth; any newly drilled interval and its depth; method(s) to demonstrate that the well has mechanical integrity (as applicable); and any deviations from the approved rework plan (as applicable).

For a well plugging plan, include the following information: Reason for the well plugging; number of plugs placed, and their depths; materials used as plugs (e.g., cast iron bridge plug, cement, cement retainer); method to set plugs; and wait-on-cement times, if any. Also provide one or more cost estimates from an independent firm in the business of plugging and abandoning wells to plug the well as described in the plan.

For well plugging affidavit, include the following information: Reason for the well plugging; number of plugs placed, and their depths; materials used as plugs (e.g., cast iron bridge plug, cement, cement retainer); method to set plugs; wait-on-cement times, if any; and any deviations from the approved plugging plan (if applicable).

For conversion to a non-injection well, include the following information: Depths of activity; type of activity; changes to injection well configuration, well casing, or cement behind casing; any plug added to the well and its depth; any newly drilled interval and its depth; depths of new perforations; and method(s) to demonstrate that the well has mechanical integrity (as applicable).

For all of the above activities, include a well sketch depicting the work, results of well tests/logging performed, service company tickets, and any other available information demonstrating how the work was/is to be performed. Also, specify whether depths are below ground surface, relative to Kelly bushing, etc.

CERTIFICATION: This form must be signed and dated by either: a responsible corporate officer for a corporation, by a general partner for a partnership, by the proprietor of a sole proprietorship, or by a principal executive or ranking elected official for a public agency.

PAPERWORK REDUCTION ACT NOTICE: The public reporting and recordkeeping burden for this collection of information is estimated to average between 6.0 and 7.9 hours per response, depending on the injection well class. Burden means the total time, effort, or financial resource expended by persons to generate, maintain, retain, or disclose or provide information to or for a Federal Agency. This includes the time needed to review instructions; develop, acquire, install, and utilize technology and systems for the purposes of collecting, validating, and verifying information, processing and maintaining information, and disclosing and providing information; adjust the existing ways to comply with any previously applicable instructions and requirements; train personnel to be able to respond to the collection of information; search data sources; complete and review the collection of information; and, transmit or otherwise disclose the information. An agency may not conduct or sponsor, and a person is not required to respond to, a collection of information unless it displays a currently valid OMB control number. Send comments on the Agency's need for this information, the accuracy of the provided burden estimates, and any suggested methods for minimizing respondent burden, including the use of automated collection techniques to Director, Collection Strategies Division, U.S. Environmental Protection Agency (2822), 1200 Pennsylvania Ave., NW., Washington, D.C. 20460. Include the OMB control number in any correspondence. Do not send the completed forms to this address.

AS-BUILT COREHOLE MCC549

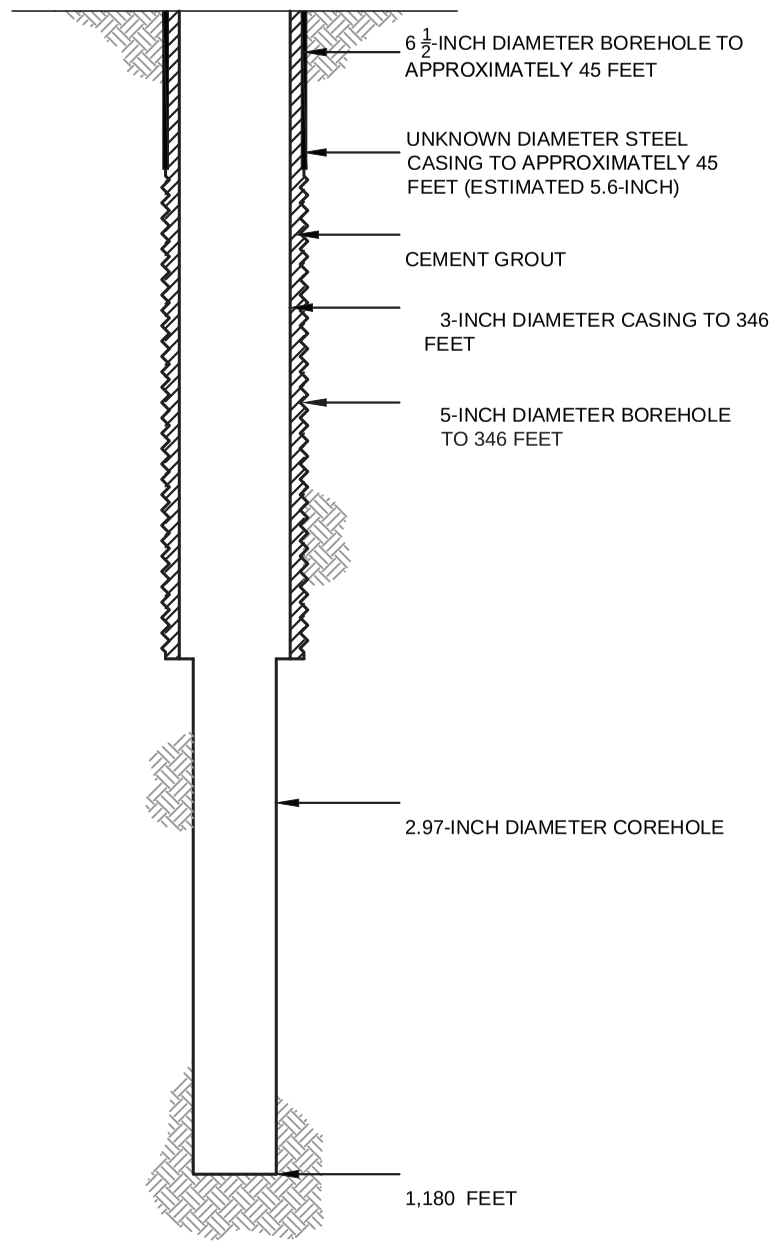

PROPOSED PLUGGING AND ABANDONMENT COREHOLE MCC549

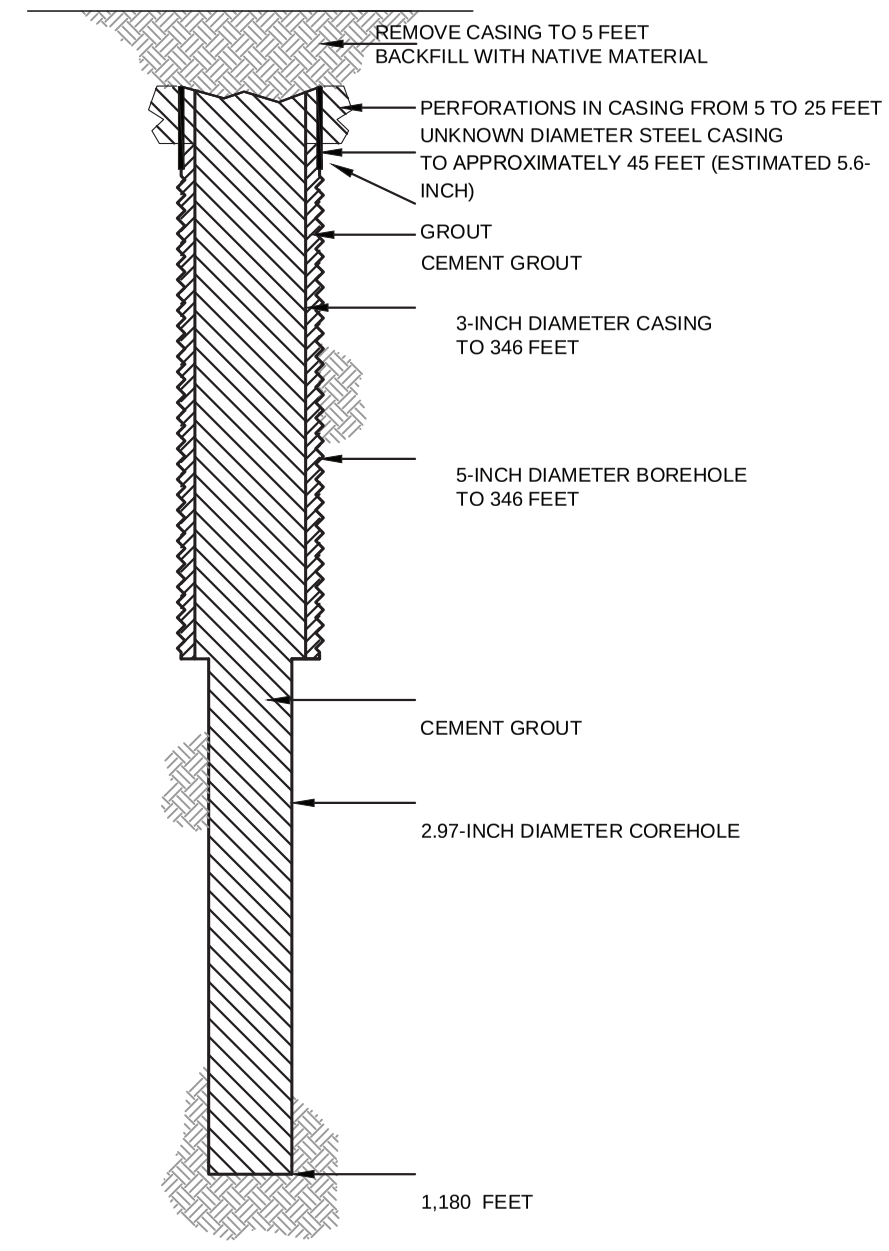

HALEY ALDRICH

FLORENCE COPPER, INC.
FLORENCE, ARIZONA

COREHOLE MCC549 DIAGRAM

FLORENCE COPPER INC.

NOT TO SCALE
SEPTEMBER 2019

FIGURE 1

MOBINI, GITA Printed: 4/21/2017 12:00 PM Layout: ABANDON (2)
\PROJECTS\CURIS RESOURCES38706-CURIS FEASIBILITY\DRAWINGS\EPA\WELL ABANDON\415S_ABANDON.DWG

OMB No. 2040-0042 Approval Expires 4/30/2022

United States Environmental Protection Agency

WELL REWORK RECORD, PLUGGING AND ABANDONMENT PLAN, OR PLUGGING AND ABANDONMENT AFFIDAVIT

Name and Address, Phone Number and/or Email of Permittee

Florence Copper Project
1575 W Hunt Hwy,
Florence, AZ 85132

Permit or EPA ID Number	API Number	Full Well Name
R9UIC-AZ3-FY11-1		MCC550

State	County
Arizona	Pinal

Locate well in two directions from nearest lines of quarter section and drilling unit

Latitude 33.04687996

Surface Location

SE **1/4 of** SW **1/4 of Section** 28 **Township** 4S **Range** 9E

Longitude -111.4335206

_____ **ft. from (N/S)** _____ **Line of quarter section**

_____ **ft. from (E/W)** _____ **Line of quarter section.**

Well Class	Timing of Action (pick one)	Type of Action (pick one)
☐ Class I ☐ Class II ☑ Class III ☐ Class V	☑ Notice Prior to Work Date Expected to Commence March 2021 ☐ Report After Work Date Work Ended	☐ Well Rework ☑ Plugging and Abandonment ☐ Conversion to a Non-Injection Well

Provide a narrative description of the work planned to be performed, or that was performed. Use additional pages as necessary. See instructions.

A workover rig capable of performing the required abandonment operations at the required depths will be moved in and set up over the core hole. The core hole will be inspected to determine the depth to which the hole remains open and if any obstructions are present in the core hole; the presence and condition of any existing collar will also be documented. If necessary, the core hole will be cleaned out to a depth of at least 100 feet below the bedrock-LBFU contact to enable placement of cement seals.

If collar is present, an attempt will be made to remove it. If removal of the collar is not feasible, it will be left in the hole and perforated as needed to allow an annular seal to be placed to a depth of at least 25 feet bgs. In areas of agricultural use, the surface casing will be cut at least 5 feet bgs and removed.

If the collar cannot be removed, it will be perforated from at least 20 feet below the bedrock-LBFU contact to at least 20 feet above the contact; from at least 20 feet below the base of the MFGU to at least 20 feet above the top of the MFGU; and from at least 25 feet bgs to 5 feet bgs.

A tremie pipe will be used to place Type V cement in the open core hole from the bottom of the core hole to the top of the core hole. Cement retainers, as described above, will be used to force cement grout into the annulus and behind perforated intervals, as necessary.

If the hole has been obstructed, as much cement as possible will be placed from 100 feet below the LBFU-bedrock contact to the top of the core hole.

The volume of Type V cement will be recorded and will not be less than the estimated volume of material required to fill each interval. All cement grout will consist of Type V cement, or equivalent approved in accordance with the UIC Permit.

Certification

I certify under the penalty of law that I have personally examined and am familiar with the information submitted in this document and all attachments and that, based on my inquiry of those individuals immediately responsible for obtaining the information, I believe that the information is true, accurate, and complete. I am aware that there are significant penalties for submitting false information, including the possibliity of fine and imprisonment. (Ref. 40 CFR § 144.32)

Name and Official Title *(Please type or print)*	Signature	Date Signed
Dan Johnson, VP - General Manager		10/3/2019

INSTRUCTIONS FOR FORM 7520-19

This form replaces forms 7520-12 and 7520-14. Use this form only when work is planned or has occurred that affects the well's construction or operation as an injection well, including work on the casing, tubing or packer (or for shallow Class V wells, the subsurface fluid emplacement network). Use one form per injection well. While reports or other information developed by contractors or service companies may be attached, this form must be signed by a responsible entity as described at 40 CFR 144.32. Note: operators closing Class V wells should use Form 7520-17.

NAME, ADDRESS, PHONE AND/OR EMAIL OF PERMITTEE: Enter the name and street address, city/town, state, and ZIP code of the permittee. Also provide an email address (if available) and/or a phone number.

PERMIT OR EPA ID NUMBER: Enter the well identification number or permit number assigned to the well by the EPA or the permitting authority.

API NUMBER: Enter the number assigned by the local jurisdiction (usually a State Oil and Gas Agency) using the American Petroleum Institute standard numbering system.

FULL WELL NAME: Enter the full name of the well or project.

Enter the **STATE** and **COUNTY** where the well is located. For States that do not have counties, use the name of that State's equivalent jurisdiction at a more local level.

WELL LOCATION: Fill in the complete township, range, and section to the nearest quarter-quarter section. A township is north or south of the baseline, and a range is east or west of the principal meridian (e.g., T12N, R34W). Also include the distance, in feet, from the nearest north or south line and nearest east or west line of the quarter-section. Also, enter the **latitude** and **longitude** of the well in decimal degrees, to five or six places if possible; be sure to include a negative sign for the longitude of a well in the Western Hemisphere and a negative sign for the latitude of a well in the Southern Hemisphere.

Enter the **WELL CLASS,** i.e., the class of injection well as defined in 40 CFR 144.6.

TIMING OF THE ACTION: Check ***Notice prior to work*** if the activity has not yet occurred (i.e., is planned). Check ***Report after work*** if the activity described has already occurred. As appropriate, include the date the activity is expected to start or the date the activity was completed. (Note this may not be available, e.g., for a plugging plan submitted with a permit application.)

TYPE OF ACTION: Check the appropriate box to describe the kind of activity being reported. Check ***Well Rework*** for work that was/will be performed on the well after it has already been in operation as an injection well. Check ***Plugging and Abandonment*** to report on plans for or descriptions of final closure/plugging after use as an injection well. Check ***Conversion to a Non-Injection Well*** if the well is to be converted to something other than an injection well.

Provide a **NARRATIVE DESCRIPTION** of the work planned to be performed, or that was performed. The narrative should include a description of the main procedures planned or that occurred during the work activity. A service company report, daily report, or similar document may be attached if it includes all the requested information and is clear and legible.

For well reworks, include the following information: The reason for the well rework; depths of activity; type of activity; changes to injection well configuration, well casing, or cement behind casing; any plug added to the well and its depth; any newly drilled interval and its depth; method(s) to demonstrate that the well has mechanical integrity (as applicable); and any deviations from the approved rework plan (as applicable).

For a well plugging plan, include the following information: Reason for the well plugging; number of plugs placed, and their depths; materials used as plugs (e.g., cast iron bridge plug, cement, cement retainer); method to set plugs; and wait-on-cement times, if any. Also provide one or more cost estimates from an independent firm in the business of plugging and abandoning wells to plug the well as described in the plan.

For well plugging affidavit, include the following information: Reason for the well plugging; number of plugs placed, and their depths; materials used as plugs (e.g., cast iron bridge plug, cement, cement retainer); method to set plugs; wait-on-cement times, if any; and any deviations from the approved plugging plan (if applicable).

For conversion to a non-injection well, include the following information: Depths of activity; type of activity; changes to injection well configuration, well casing, or cement behind casing; any plug added to the well and its depth; any newly drilled interval and its depth; depths of new perforations; and method(s) to demonstrate that the well has mechanical integrity (as applicable).

For all of the above activities, include a well sketch depicting the work, results of well tests/logging performed, service company tickets, and any other available information demonstrating how the work was/is to be performed. Also, specify whether depths are below ground surface, relative to Kelly bushing, etc.

CERTIFICATION: This form must be signed and dated by either: a responsible corporate officer for a corporation, by a general partner for a partnership, by the proprietor of a sole proprietorship, or by a principal executive or ranking elected official for a public agency.

PAPERWORK REDUCTION ACT NOTICE: The public reporting and recordkeeping burden for this collection of information is estimated to average between 6.0 and 7.9 hours per response, depending on the injection well class. Burden means the total time, effort, or financial resource expended by persons to generate, maintain, retain, or disclose or provide information to or for a Federal Agency. This includes the time needed to review instructions; develop, acquire, install, and utilize technology and systems for the purposes of collecting, validating, and verifying information, processing and maintaining information, and disclosing and providing information; adjust the existing ways to comply with any previously applicable instructions and requirements; train personnel to be able to respond to the collection of information; search data sources; complete and review the collection of information; and, transmit or otherwise disclose the information. An agency may not conduct or sponsor, and a person is not required to respond to, a collection of information unless it displays a currently valid OMB control number. Send comments on the Agency's need for this information, the accuracy of the provided burden estimates, and any suggested methods for minimizing respondent burden, including the use of automated collection techniques to Director, Collection Strategies Division, U.S. Environmental Protection Agency (2822), 1200 Pennsylvania Ave., NW., Washington, D.C. 20460. Include the OMB control number in any correspondence. Do not send the completed forms to this address.

AS-BUILT COREHOLE MCC550

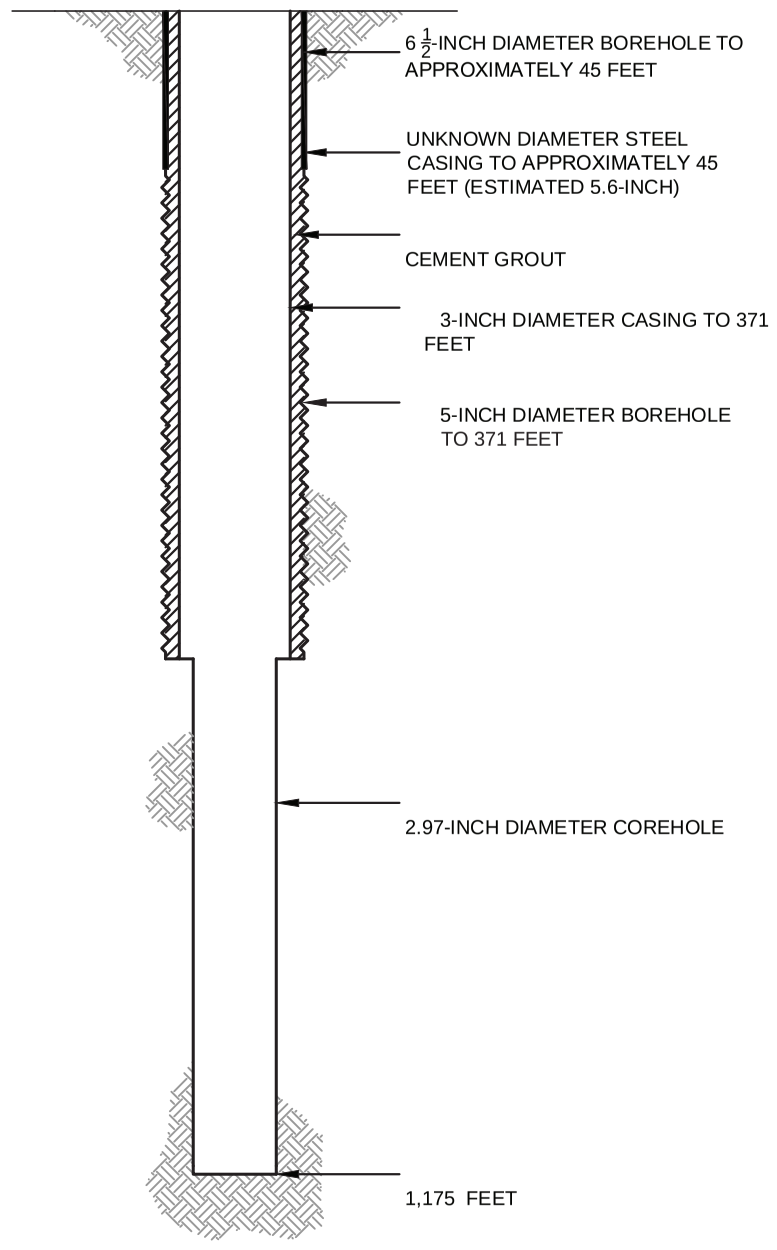

PROPOSED PLUGGING AND ABANDONMENT COREHOLE MCC550

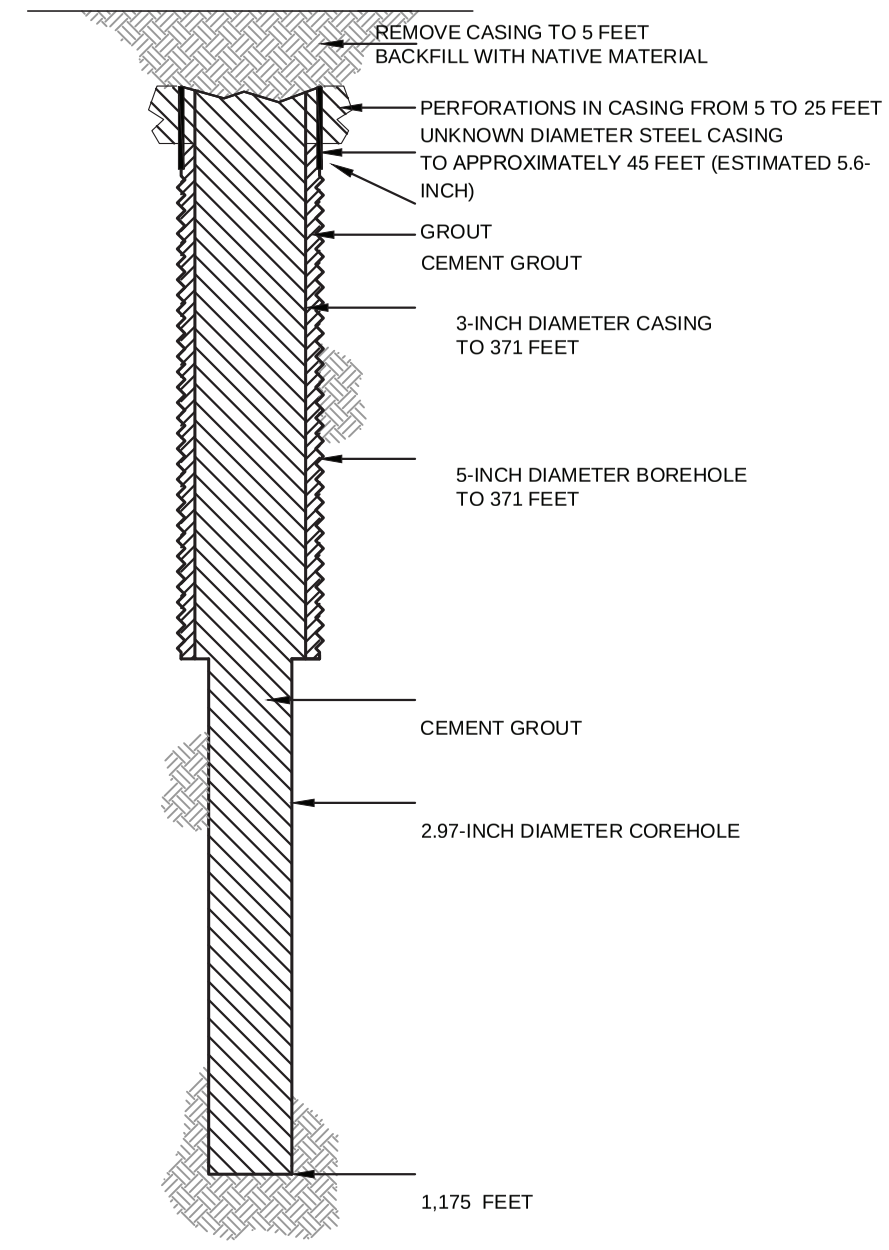

HALEY ALDRICH

FLORENCE COPPER, INC.
FLORENCE, ARIZONA

COREHOLE MCC550 DIAGRAM

FLORENCE COPPER INC.

NOT TO SCALE
SEPTEMBER 2019

FIGURE 1

MOBINI, GITA Printed: 4/21/2017 12:00 PM Layout: ABANDON (2)
\PROJECTS\CURIS RESOURCES38706-CURIS FEASIBILITY\DRAWINGS\EPA\WELL ABANDON\415S_ABANDON.DWG

OMB No. 2040-0042 Approval Expires 4/30/2022

United States Environmental Protection Agency

WELL REWORK RECORD, PLUGGING AND ABANDONMENT PLAN, OR PLUGGING AND ABANDONMENT AFFIDAVIT

Name and Address, Phone Number and/or Email of Permittee

Florence Copper Project
1575 W Hunt Hwy,
Florence, AZ 85132

Permit or EPA ID Number	API Number	Full Well Name
R9UIC-AZ3-FY11-1		MCC551

State	County
Arizona	Pinal

Locate well in two directions from nearest lines of quarter section and drilling unit

Latitude 33.04683722

Longitude -111.4327046

Surface Location

SE **1/4 of** SW **1/4 of Section** 28 **Township** 4S **Range** 9E

_____ **ft. from (N/S)** _____ **Line of quarter section**

_____ **ft. from (E/W)** _____ **Line of quarter section.**

Well Class	Timing of Action (pick one)	Type of Action (pick one)
☐ Class I ☐ Class II ☑ Class III ☐ Class V	☑ Notice Prior to Work Date Expected to Commence March 2021 ☐ Report After Work Date Work Ended	☐ Well Rework ☑ Plugging and Abandonment ☐ Conversion to a Non-Injection Well

Provide a narrative description of the work planned to be performed, or that was performed. Use additional pages as necessary. See instructions.

A workover rig capable of performing the required abandonment operations at the required depths will be moved in and set up over the core hole. The core hole will be inspected to determine the depth to which the hole remains open and if any obstructions are present in the core hole; the presence and condition of any existing collar will also be documented. If necessary, the core hole will be cleaned out to a depth of at least 100 feet below the bedrock-LBFU contact to enable placement of cement seals.

If collar is present, an attempt will be made to remove it. If removal of the collar is not feasible, it will be left in the hole and perforated as needed to allow an annular seal to be placed to a depth of at least 25 feet bgs. In areas of agricultural use, the surface casing will be cut at least 5 feet bgs and removed.

If the collar cannot be removed, it will be perforated from at least 20 feet below the bedrock-LBFU contact to at least 20 feet above the contact; from at least 20 feet below the base of the MFGU to at least 20 feet above the top of the MFGU; and from at least 25 feet bgs to 5 feet bgs.

A tremie pipe will be used to place Type V cement in the open core hole from the bottom of the core hole to the top of the core hole. Cement retainers, as described above, will be used to force cement grout into the annulus and behind perforated intervals, as necessary.

If the hole has been obstructed, as much cement as possible will be placed from 100 feet below the LBFU-bedrock contact to the top of the core hole.

The volume of Type V cement will be recorded and will not be less than the estimated volume of material required to fill each interval. All cement grout will consist of Type V cement, or equivalent approved in accordance with the UIC Permit.

Certification

I certify under the penalty of law that I have personally examined and am familiar with the information submitted in this document and all attachments and that, based on my inquiry of those individuals immediately responsible for obtaining the information, I believe that the information is true, accurate, and complete. I am aware that there are significant penalties for submitting false information, including the possibliity of fine and imprisonment. (Ref. 40 CFR § 144.32)

Name and Official Title *(Please type or print)*	Signature	Date Signed
Dan Johnson, VP - General Manager		10/3/2019

INSTRUCTIONS FOR FORM 7520-19

This form replaces forms 7520-12 and 7520-14. Use this form only when work is planned or has occurred that affects the well's construction or operation as an injection well, including work on the casing, tubing or packer (or for shallow Class V wells, the subsurface fluid emplacement network). Use one form per injection well. While reports or other information developed by contractors or service companies may be attached, this form must be signed by a responsible entity as described at 40 CFR 144.32. Note: operators closing Class V wells should use Form 7520-17.

NAME, ADDRESS, PHONE AND/OR EMAIL OF PERMITTEE: Enter the name and street address, city/town, state, and ZIP code of the permittee. Also provide an email address (if available) and/or a phone number.

PERMIT OR EPA ID NUMBER: Enter the well identification number or permit number assigned to the well by the EPA or the permitting authority.

API NUMBER: Enter the number assigned by the local jurisdiction (usually a State Oil and Gas Agency) using the American Petroleum Institute standard numbering system.

FULL WELL NAME: Enter the full name of the well or project.

Enter the **STATE** and **COUNTY** where the well is located. For States that do not have counties, use the name of that State's equivalent jurisdiction at a more local level.

WELL LOCATION: Fill in the complete township, range, and section to the nearest quarter-quarter section. A township is north or south of the baseline, and a range is east or west of the principal meridian (e.g., T12N, R34W). Also include the distance, in feet, from the nearest north or south line and nearest east or west line of the quarter-section. Also, enter the **latitude** and **longitude** of the well in decimal degrees, to five or six places if possible; be sure to include a negative sign for the longitude of a well in the Western Hemisphere and a negative sign for the latitude of a well in the Southern Hemisphere.

Enter the **WELL CLASS,** i.e., the class of injection well as defined in 40 CFR 144.6.

TIMING OF THE ACTION: Check ***Notice prior to work*** if the activity has not yet occurred (i.e., is planned). Check ***Report after work*** if the activity described has already occurred. As appropriate, include the date the activity is expected to start or the date the activity was completed. (Note this may not be available, e.g., for a plugging plan submitted with a permit application.)

TYPE OF ACTION: Check the appropriate box to describe the kind of activity being reported. Check ***Well Rework*** for work that was/will be performed on the well after it has already been in operation as an injection well. Check ***Plugging and Abandonment*** to report on plans for or descriptions of final closure/plugging after use as an injection well. Check ***Conversion to a Non-Injection Well*** if the well is to be converted to something other than an injection well.

Provide a **NARRATIVE DESCRIPTION** of the work planned to be performed, or that was performed. The narrative should include a description of the main procedures planned or that occurred during the work activity. A service company report, daily report, or similar document may be attached if it includes all the requested information and is clear and legible.

For well reworks, include the following information: The reason for the well rework; depths of activity; type of activity; changes to injection well configuration, well casing, or cement behind casing; any plug added to the well and its depth; any newly drilled interval and its depth; method(s) to demonstrate that the well has mechanical integrity (as applicable); and any deviations from the approved rework plan (as applicable).

For a well plugging plan, include the following information: Reason for the well plugging; number of plugs placed, and their depths; materials used as plugs (e.g., cast iron bridge plug, cement, cement retainer); method to set plugs; and wait-on-cement times, if any. Also provide one or more cost estimates from an independent firm in the business of plugging and abandoning wells to plug the well as described in the plan.

For well plugging affidavit, include the following information: Reason for the well plugging; number of plugs placed, and their depths; materials used as plugs (e.g., cast iron bridge plug, cement, cement retainer); method to set plugs; wait-on-cement times, if any; and any deviations from the approved plugging plan (if applicable).

For conversion to a non-injection well, include the following information: Depths of activity; type of activity; changes to injection well configuration, well casing, or cement behind casing; any plug added to the well and its depth; any newly drilled interval and its depth; depths of new perforations; and method(s) to demonstrate that the well has mechanical integrity (as applicable).

For all of the above activities, include a well sketch depicting the work, results of well tests/logging performed, service company tickets, and any other available information demonstrating how the work was/is to be performed. Also, specify whether depths are below ground surface, relative to Kelly bushing, etc.

CERTIFICATION: This form must be signed and dated by either: a responsible corporate officer for a corporation, by a general partner for a partnership, by the proprietor of a sole proprietorship, or by a principal executive or ranking elected official for a public agency.

PAPERWORK REDUCTION ACT NOTICE: The public reporting and recordkeeping burden for this collection of information is estimated to average between 6.0 and 7.9 hours per response, depending on the injection well class. Burden means the total time, effort, or financial resource expended by persons to generate, maintain, retain, or disclose or provide information to or for a Federal Agency. This includes the time needed to review instructions; develop, acquire, install, and utilize technology and systems for the purposes of collecting, validating, and verifying information, processing and maintaining information, and disclosing and providing information; adjust the existing ways to comply with any previously applicable instructions and requirements; train personnel to be able to respond to the collection of information; search data sources; complete and review the collection of information; and, transmit or otherwise disclose the information. An agency may not conduct or sponsor, and a person is not required to respond to, a collection of information unless it displays a currently valid OMB control number. Send comments on the Agency's need for this information, the accuracy of the provided burden estimates, and any suggested methods for minimizing respondent burden, including the use of automated collection techniques to Director, Collection Strategies Division, U.S. Environmental Protection Agency (2822), 1200 Pennsylvania Ave., NW., Washington, D.C. 20460. Include the OMB control number in any correspondence. Do not send the completed forms to this address.

AS-BUILT COREHOLE MCC551

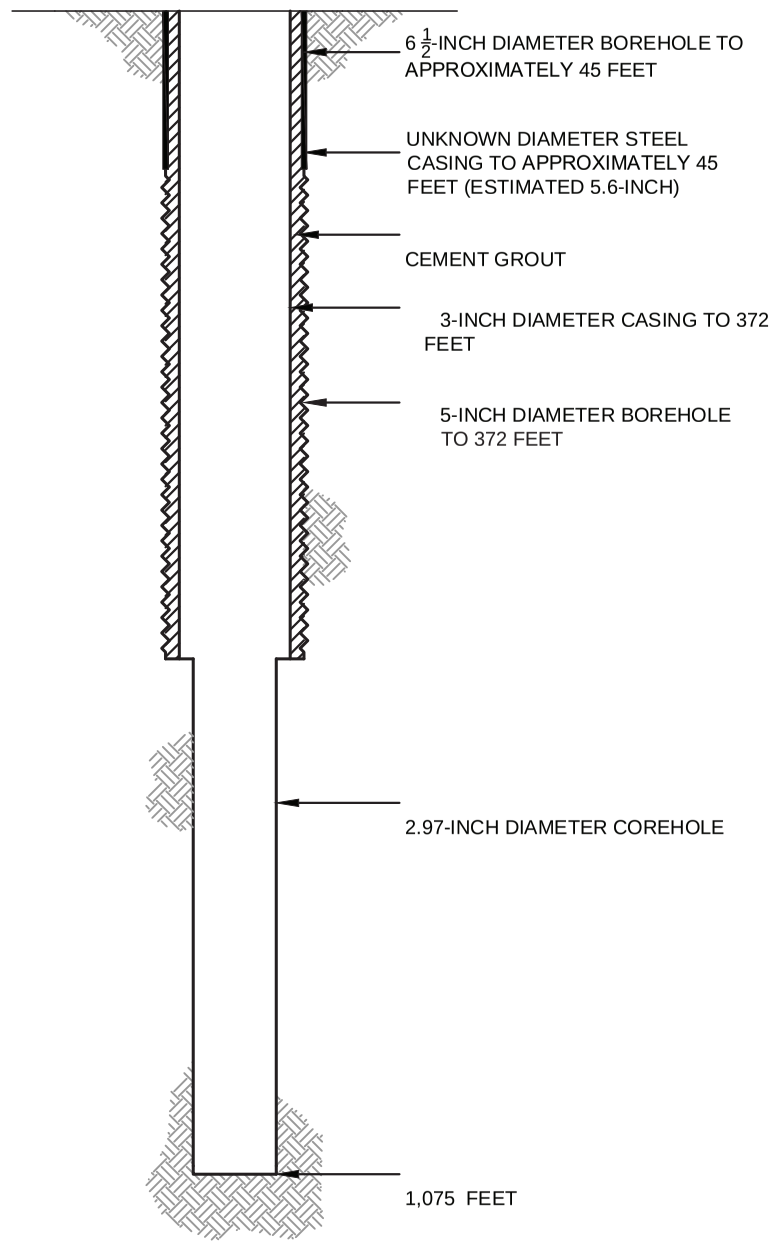

PROPOSED PLUGGING AND ABANDONMENT COREHOLE MCC551

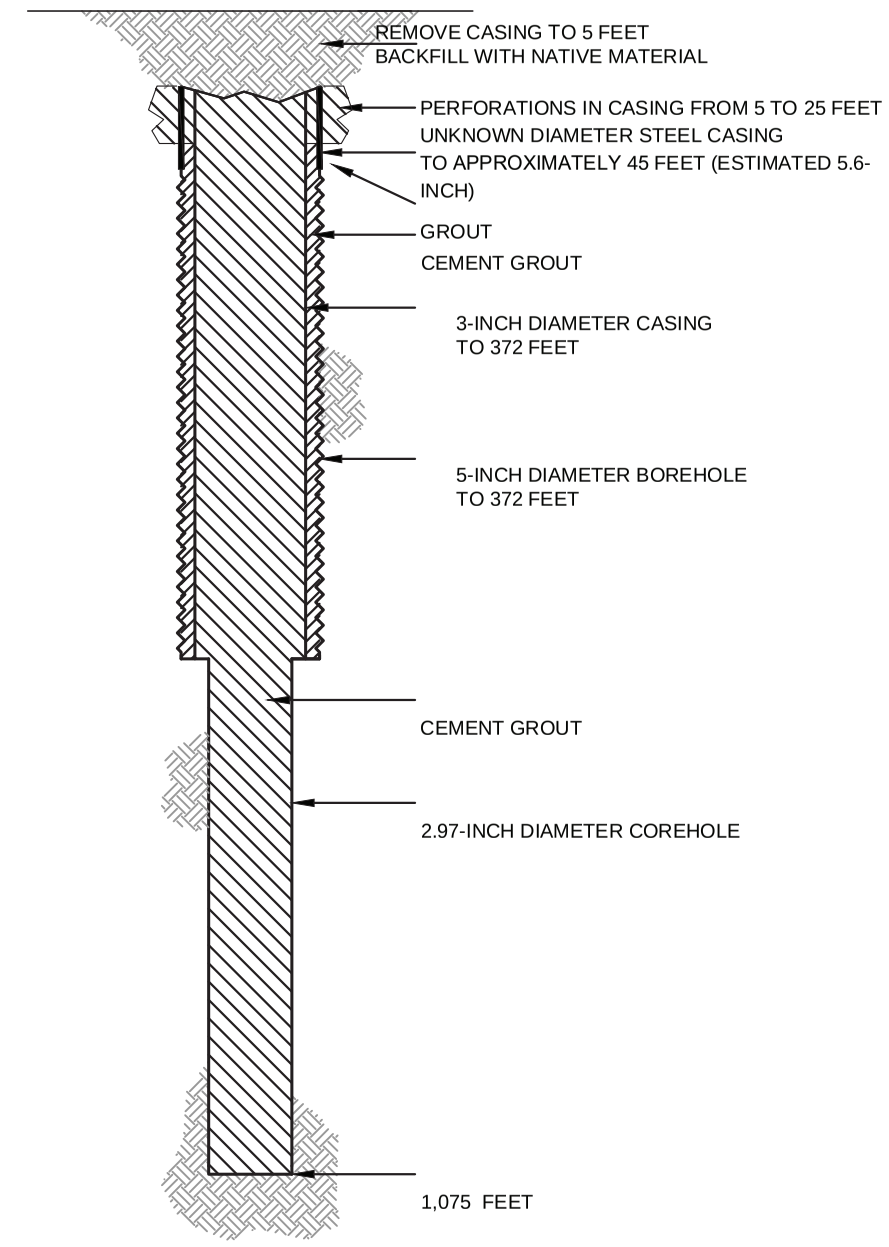

HALEY ALDRICH

FLORENCE COPPER, INC.
FLORENCE, ARIZONA

COREHOLE MCC551 DIAGRAM

FLORENCE COPPER INC.

NOT TO SCALE
SEPTEMBER 2019

FIGURE 1

MOBINI, GITA Printed: 4/21/2017 12:00 PM Layout: ABANDON (2)
\PROJECTS\CURIS RESOURCES38706-CURIS FEASIBILITY\DRAWINGS\EPA\WELL ABANDON\415S_ABANDON.DWG

OMB No. 2040-0042 Approval Expires 4/30/2022

United States Environmental Protection Agency

WELL REWORK RECORD, PLUGGING AND ABANDONMENT PLAN, OR PLUGGING AND ABANDONMENT AFFIDAVIT

Name and Address, Phone Number and/or Email of Permittee

Florence Copper Project
1575 W Hunt Hwy,
Florence, AZ 85132

Permit or EPA ID Number	API Number	Full Well Name
R9UIC-AZ3-FY11-1		MCC552

State	County
Arizona	Pinal

Locate well in two directions from nearest lines of quarter section and drilling unit

Surface Location

NE 1/4 of NW 1/4 of Section 33 Township 4S Range 9E

Latitude 33.04573676

Longitude -111.4337207

ft. from (N/S) Line of quarter section

ft. from (E/W) Line of quarter section.

Well Class	Timing of Action (pick one)	Type of Action (pick one)
☐ Class I ☐ Class II ☑ Class III ☐ Class V	☑ Notice Prior to Work Date Expected to Commence March 2021 ☐ Report After Work Date Work Ended	☐ Well Rework ☑ Plugging and Abandonment ☐ Conversion to a Non-Injection Well

Provide a narrative description of the work planned to be performed, or that was performed. Use additional pages as necessary. See instructions.

A workover rig capable of performing the required abandonment operations at the required depths will be moved in and set up over the core hole. The core hole will be inspected to determine the depth to which the hole remains open and if any obstructions are present in the core hole; the presence and condition of any existing collar will also be documented. If necessary, the core hole will be cleaned out to a depth of at least 100 feet below the bedrock-LBFU contact to enable placement of cement seals.

If collar is present, an attempt will be made to remove it. If removal of the collar is not feasible, it will be left in the hole and perforated as needed to allow an annular seal to be placed to a depth of at least 25 feet bgs. In areas of agricultural use, the surface casing will be cut at least 5 feet bgs and removed.

If the collar cannot be removed, it will be perforated from at least 20 feet below the bedrock-LBFU contact to at least 20 feet above the contact; from at least 20 feet below the base of the MFGU to at least 20 feet above the top of the MFGU; and from at least 25 feet bgs to 5 feet bgs.

A tremie pipe will be used to place Type V cement in the open core hole from the bottom of the core hole to the top of the core hole. Cement retainers, as described above, will be used to force cement grout into the annulus and behind perforated intervals, as necessary.

If the hole has been obstructed, as much cement as possible will be placed from 100 feet below the LBFU-bedrock contact to the top of the core hole.

The volume of Type V cement will be recorded and will not be less than the estimated volume of material required to fill each interval. All cement grout will consist of Type V cement, or equivalent approved in accordance with the UIC Permit.

Certification

I certify under the penalty of law that I have personally examined and am familiar with the information submitted in this document and all attachments and that, based on my inquiry of those individuals immediately responsible for obtaining the information, I believe that the information is true, accurate, and complete. I am aware that there are significant penalties for submitting false information, including the possibliity of fine and imprisonment. (Ref. 40 CFR § 144.32)

Name and Official Title *(Please type or print)*	Signature	Date Signed
Dan Johnson, VP - General Manager		10/3/2019

INSTRUCTIONS FOR FORM 7520-19

This form replaces forms 7520-12 and 7520-14. Use this form only when work is planned or has occurred that affects the well's construction or operation as an injection well, including work on the casing, tubing or packer (or for shallow Class V wells, the subsurface fluid emplacement network). Use one form per injection well. While reports or other information developed by contractors or service companies may be attached, this form must be signed by a responsible entity as described at 40 CFR 144.32. Note: operators closing Class V wells should use Form 7520-17.

NAME, ADDRESS, PHONE AND/OR EMAIL OF PERMITTEE: Enter the name and street address, city/town, state, and ZIP code of the permittee. Also provide an email address (if available) and/or a phone number.

PERMIT OR EPA ID NUMBER: Enter the well identification number or permit number assigned to the well by the EPA or the permitting authority.

API NUMBER: Enter the number assigned by the local jurisdiction (usually a State Oil and Gas Agency) using the American Petroleum Institute standard numbering system.

FULL WELL NAME: Enter the full name of the well or project.

Enter the **STATE** and **COUNTY** where the well is located. For States that do not have counties, use the name of that State's equivalent jurisdiction at a more local level.

WELL LOCATION: Fill in the complete township, range, and section to the nearest quarter-quarter section. A township is north or south of the baseline, and a range is east or west of the principal meridian (e.g., T12N, R34W). Also include the distance, in feet, from the nearest north or south line and nearest east or west line of the quarter-section. Also, enter the **latitude** and **longitude** of the well in decimal degrees, to five or six places if possible; be sure to include a negative sign for the longitude of a well in the Western Hemisphere and a negative sign for the latitude of a well in the Southern Hemisphere.

Enter the **WELL CLASS,** i.e., the class of injection well as defined in 40 CFR 144.6.

TIMING OF THE ACTION: Check ***Notice prior to work*** if the activity has not yet occurred (i.e., is planned). Check ***Report after work*** if the activity described has already occurred. As appropriate, include the date the activity is expected to start or the date the activity was completed. (Note this may not be available, e.g., for a plugging plan submitted with a permit application.)

TYPE OF ACTION: Check the appropriate box to describe the kind of activity being reported. Check ***Well Rework*** for work that was/will be performed on the well after it has already been in operation as an injection well. Check ***Plugging and Abandonment*** to report on plans for or descriptions of final closure/plugging after use as an injection well. Check ***Conversion to a Non-Injection Well*** if the well is to be converted to something other than an injection well.

Provide a **NARRATIVE DESCRIPTION** of the work planned to be performed, or that was performed. The narrative should include a description of the main procedures planned or that occurred during the work activity. A service company report, daily report, or similar document may be attached if it includes all the requested information and is clear and legible.

For well reworks, include the following information: The reason for the well rework; depths of activity; type of activity; changes to injection well configuration, well casing, or cement behind casing; any plug added to the well and its depth; any newly drilled interval and its depth; method(s) to demonstrate that the well has mechanical integrity (as applicable); and any deviations from the approved rework plan (as applicable).

For a well plugging plan, include the following information: Reason for the well plugging; number of plugs placed, and their depths; materials used as plugs (e.g., cast iron bridge plug, cement, cement retainer); method to set plugs; and wait-on-cement times, if any. Also provide one or more cost estimates from an independent firm in the business of plugging and abandoning wells to plug the well as described in the plan.

For well plugging affidavit, include the following information: Reason for the well plugging; number of plugs placed, and their depths; materials used as plugs (e.g., cast iron bridge plug, cement, cement retainer); method to set plugs; wait-on-cement times, if any; and any deviations from the approved plugging plan (if applicable).

For conversion to a non-injection well, include the following information: Depths of activity; type of activity; changes to injection well configuration, well casing, or cement behind casing; any plug added to the well and its depth; any newly drilled interval and its depth; depths of new perforations; and method(s) to demonstrate that the well has mechanical integrity (as applicable).

For all of the above activities, include a well sketch depicting the work, results of well tests/logging performed, service company tickets, and any other available information demonstrating how the work was/is to be performed. Also, specify whether depths are below ground surface, relative to Kelly bushing, etc.

CERTIFICATION: This form must be signed and dated by either: a responsible corporate officer for a corporation, by a general partner for a partnership, by the proprietor of a sole proprietorship, or by a principal executive or ranking elected official for a public agency.

PAPERWORK REDUCTION ACT NOTICE: The public reporting and recordkeeping burden for this collection of information is estimated to average between 6.0 and 7.9 hours per response, depending on the injection well class. Burden means the total time, effort, or financial resource expended by persons to generate, maintain, retain, or disclose or provide information to or for a Federal Agency. This includes the time needed to review instructions; develop, acquire, install, and utilize technology and systems for the purposes of collecting, validating, and verifying information, processing and maintaining information, and disclosing and providing information; adjust the existing ways to comply with any previously applicable instructions and requirements; train personnel to be able to respond to the collection of information; search data sources; complete and review the collection of information; and, transmit or otherwise disclose the information. An agency may not conduct or sponsor, and a person is not required to respond to, a collection of information unless it displays a currently valid OMB control number. Send comments on the Agency's need for this information, the accuracy of the provided burden estimates, and any suggested methods for minimizing respondent burden, including the use of automated collection techniques to Director, Collection Strategies Division, U.S. Environmental Protection Agency (2822), 1200 Pennsylvania Ave., NW., Washington, D.C. 20460. Include the OMB control number in any correspondence. Do not send the completed forms to this address.

AS-BUILT COREHOLE MCC552

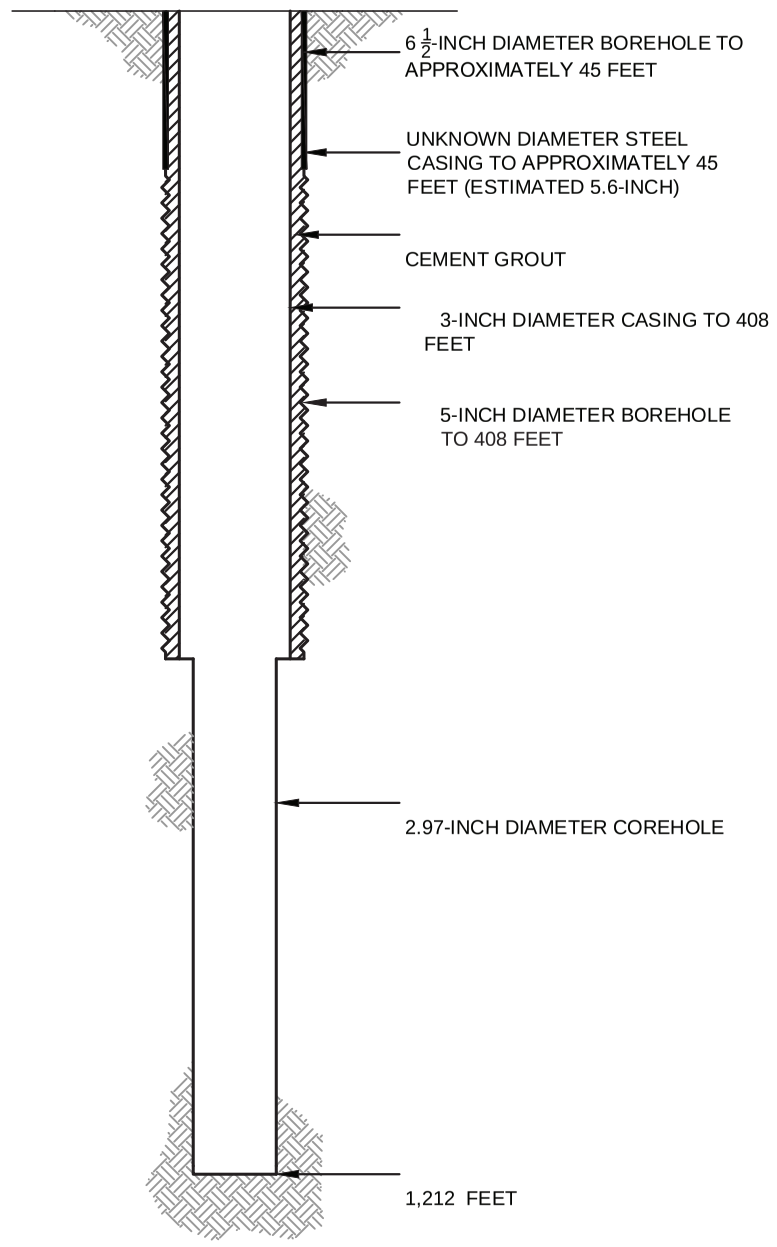

PROPOSED PLUGGING AND ABANDONMENT COREHOLE MCC552

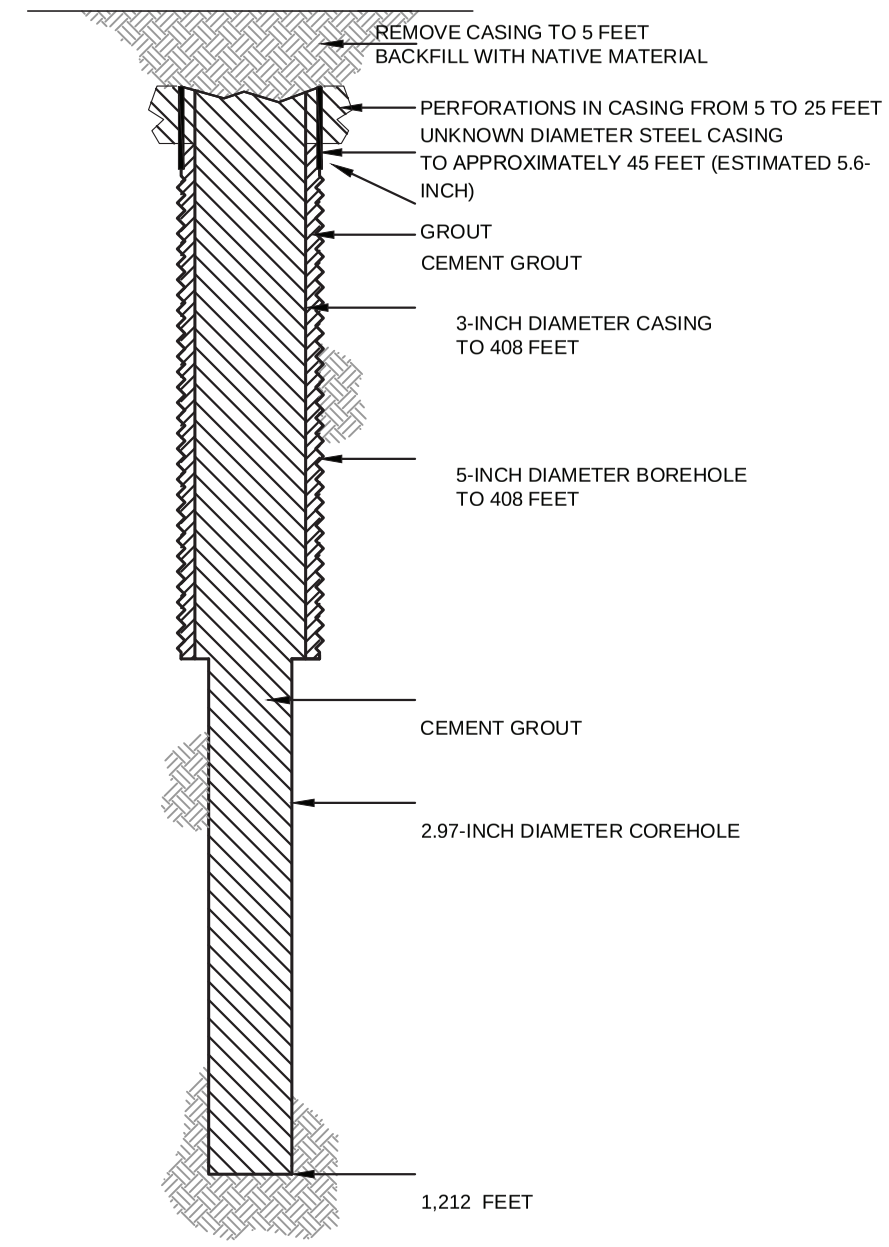

HALEY ALDRICH

FLORENCE COPPER, INC.
FLORENCE, ARIZONA

COREHOLE MCC552 DIAGRAM

FLORENCE COPPER INC.

NOT TO SCALE
SEPTEMBER 2019

FIGURE 1

MOBINI, GITA Printed: 4/21/2017 12:00 PM Layout: ABANDON (2)
\PROJECTS\CURIS RESOURCES38706-CURIS FEASIBILITY\DRAWINGS\EPA\WELL ABANDON\415S_ABANDON.DWG

OMB No. 2040-0042 Approval Expires 4/30/2022

United States Environmental Protection Agency

WELL REWORK RECORD, PLUGGING AND ABANDONMENT PLAN, OR PLUGGING AND ABANDONMENT AFFIDAVIT

Name and Address, Phone Number and/or Email of Permittee

Florence Copper Project
1575 W Hunt Hwy,
Florence, AZ 85132

Permit or EPA ID Number	API Number	Full Well Name
R9UIC-AZ3-FY11-1		MCC553

State	County
Arizona	Pinal

Locate well in two directions from nearest lines of quarter section and drilling unit

Latitude 33.04629685

Surface Location

SE **1/4 of** SW **1/4 of Section** 28 **Township** 4S **Range** 9E

Longitude -111.4339842

_____ **ft. from (N/S)** _____ **Line of quarter section**

_____ **ft. from (E/W)** _____ **Line of quarter section.**

Well Class	Timing of Action (pick one)	Type of Action (pick one)
☐ Class I ☐ Class II ☑ Class III ☐ Class V	☑ Notice Prior to Work Date Expected to Commence March 2021 ☐ Report After Work Date Work Ended	☐ Well Rework ☑ Plugging and Abandonment ☐ Conversion to a Non-Injection Well

Provide a narrative description of the work planned to be performed, or that was performed. Use additional pages as necessary. See instructions.

A workover rig capable of performing the required abandonment operations at the required depths will be moved in and set up over the core hole. The core hole will be inspected to determine the depth to which the hole remains open and if any obstructions are present in the core hole; the presence and condition of any existing collar will also be documented. If necessary, the core hole will be cleaned out to a depth of at least 100 feet below the bedrock-LBFU contact to enable placement of cement seals.

If collar is present, an attempt will be made to remove it. If removal of the collar is not feasible, it will be left in the hole and perforated as needed to allow an annular seal to be placed to a depth of at least 25 feet bgs. In areas of agricultural use, the surface casing will be cut at least 5 feet bgs and removed.

If the collar cannot be removed, it will be perforated from at least 20 feet below the bedrock-LBFU contact to at least 20 feet above the contact; from at least 20 feet below the base of the MFGU to at least 20 feet above the top of the MFGU; and from at least 25 feet bgs to 5 feet bgs.

A tremie pipe will be used to place Type V cement in the open core hole from the bottom of the core hole to the top of the core hole. Cement retainers, as described above, will be used to force cement grout into the annulus and behind perforated intervals, as necessary.

If the hole has been obstructed, as much cement as possible will be placed from 100 feet below the LBFU-bedrock contact to the top of the core hole.

The volume of Type V cement will be recorded and will not be less than the estimated volume of material required to fill each interval. All cement grout will consist of Type V cement, or equivalent approved in accordance with the UIC Permit.

Certification

I certify under the penalty of law that I have personally examined and am familiar with the information submitted in this document and all attachments and that, based on my inquiry of those individuals immediately responsible for obtaining the information, I believe that the information is true, accurate, and complete. I am aware that there are significant penalties for submitting false information, including the possibliity of fine and imprisonment. (Ref. 40 CFR § 144.32)

Name and Official Title *(Please type or print)*	Signature	Date Signed
Dan Johnson, VP - General Manager		10/3/2019

INSTRUCTIONS FOR FORM 7520-19

This form replaces forms 7520-12 and 7520-14. Use this form only when work is planned or has occurred that affects the well's construction or operation as an injection well, including work on the casing, tubing or packer (or for shallow Class V wells, the subsurface fluid emplacement network). Use one form per injection well. While reports or other information developed by contractors or service companies may be attached, this form must be signed by a responsible entity as described at 40 CFR 144.32. Note: operators closing Class V wells should use Form 7520-17.

NAME, ADDRESS, PHONE AND/OR EMAIL OF PERMITTEE: Enter the name and street address, city/town, state, and ZIP code of the permittee. Also provide an email address (if available) and/or a phone number.

PERMIT OR EPA ID NUMBER: Enter the well identification number or permit number assigned to the well by the EPA or the permitting authority.

API NUMBER: Enter the number assigned by the local jurisdiction (usually a State Oil and Gas Agency) using the American Petroleum Institute standard numbering system.

FULL WELL NAME: Enter the full name of the well or project.

Enter the **STATE** and **COUNTY** where the well is located. For States that do not have counties, use the name of that State's equivalent jurisdiction at a more local level.

WELL LOCATION: Fill in the complete township, range, and section to the nearest quarter-quarter section. A township is north or south of the baseline, and a range is east or west of the principal meridian (e.g., T12N, R34W). Also include the distance, in feet, from the nearest north or south line and nearest east or west line of the quarter-section. Also, enter the **latitude** and **longitude** of the well in decimal degrees, to five or six places if possible; be sure to include a negative sign for the longitude of a well in the Western Hemisphere and a negative sign for the latitude of a well in the Southern Hemisphere.

Enter the **WELL CLASS,** i.e., the class of injection well as defined in 40 CFR 144.6.

TIMING OF THE ACTION: Check ***Notice prior to work*** if the activity has not yet occurred (i.e., is planned). Check ***Report after work*** if the activity described has already occurred. As appropriate, include the date the activity is expected to start or the date the activity was completed. (Note this may not be available, e.g., for a plugging plan submitted with a permit application.)

TYPE OF ACTION: Check the appropriate box to describe the kind of activity being reported. Check ***Well Rework*** for work that was/will be performed on the well after it has already been in operation as an injection well. Check ***Plugging and Abandonment*** to report on plans for or descriptions of final closure/plugging after use as an injection well. Check ***Conversion to a Non-Injection Well*** if the well is to be converted to something other than an injection well.

Provide a **NARRATIVE DESCRIPTION** of the work planned to be performed, or that was performed. The narrative should include a description of the main procedures planned or that occurred during the work activity. A service company report, daily report, or similar document may be attached if it includes all the requested information and is clear and legible.

For well reworks, include the following information: The reason for the well rework; depths of activity; type of activity; changes to injection well configuration, well casing, or cement behind casing; any plug added to the well and its depth; any newly drilled interval and its depth; method(s) to demonstrate that the well has mechanical integrity (as applicable); and any deviations from the approved rework plan (as applicable).

For a well plugging plan, include the following information: Reason for the well plugging; number of plugs placed, and their depths; materials used as plugs (e.g., cast iron bridge plug, cement, cement retainer); method to set plugs; and wait-on-cement times, if any. Also provide one or more cost estimates from an independent firm in the business of plugging and abandoning wells to plug the well as described in the plan.

For well plugging affidavit, include the following information: Reason for the well plugging; number of plugs placed, and their depths; materials used as plugs (e.g., cast iron bridge plug, cement, cement retainer); method to set plugs; wait-on-cement times, if any; and any deviations from the approved plugging plan (if applicable).

For conversion to a non-injection well, include the following information: Depths of activity; type of activity; changes to injection well configuration, well casing, or cement behind casing; any plug added to the well and its depth; any newly drilled interval and its depth; depths of new perforations; and method(s) to demonstrate that the well has mechanical integrity (as applicable).

For all of the above activities, include a well sketch depicting the work, results of well tests/logging performed, service company tickets, and any other available information demonstrating how the work was/is to be performed. Also, specify whether depths are below ground surface, relative to Kelly bushing, etc.

CERTIFICATION: This form must be signed and dated by either: a responsible corporate officer for a corporation, by a general partner for a partnership, by the proprietor of a sole proprietorship, or by a principal executive or ranking elected official for a public agency.

PAPERWORK REDUCTION ACT NOTICE: The public reporting and recordkeeping burden for this collection of information is estimated to average between 6.0 and 7.9 hours per response, depending on the injection well class. Burden means the total time, effort, or financial resource expended by persons to generate, maintain, retain, or disclose or provide information to or for a Federal Agency. This includes the time needed to review instructions; develop, acquire, install, and utilize technology and systems for the purposes of collecting, validating, and verifying information, processing and maintaining information, and disclosing and providing information; adjust the existing ways to comply with any previously applicable instructions and requirements; train personnel to be able to respond to the collection of information; search data sources; complete and review the collection of information; and, transmit or otherwise disclose the information. An agency may not conduct or sponsor, and a person is not required to respond to, a collection of information unless it displays a currently valid OMB control number. Send comments on the Agency's need for this information, the accuracy of the provided burden estimates, and any suggested methods for minimizing respondent burden, including the use of automated collection techniques to Director, Collection Strategies Division, U.S. Environmental Protection Agency (2822), 1200 Pennsylvania Ave., NW., Washington, D.C. 20460. Include the OMB control number in any correspondence. Do not send the completed forms to this address.

AS-BUILT COREHOLE MCC553

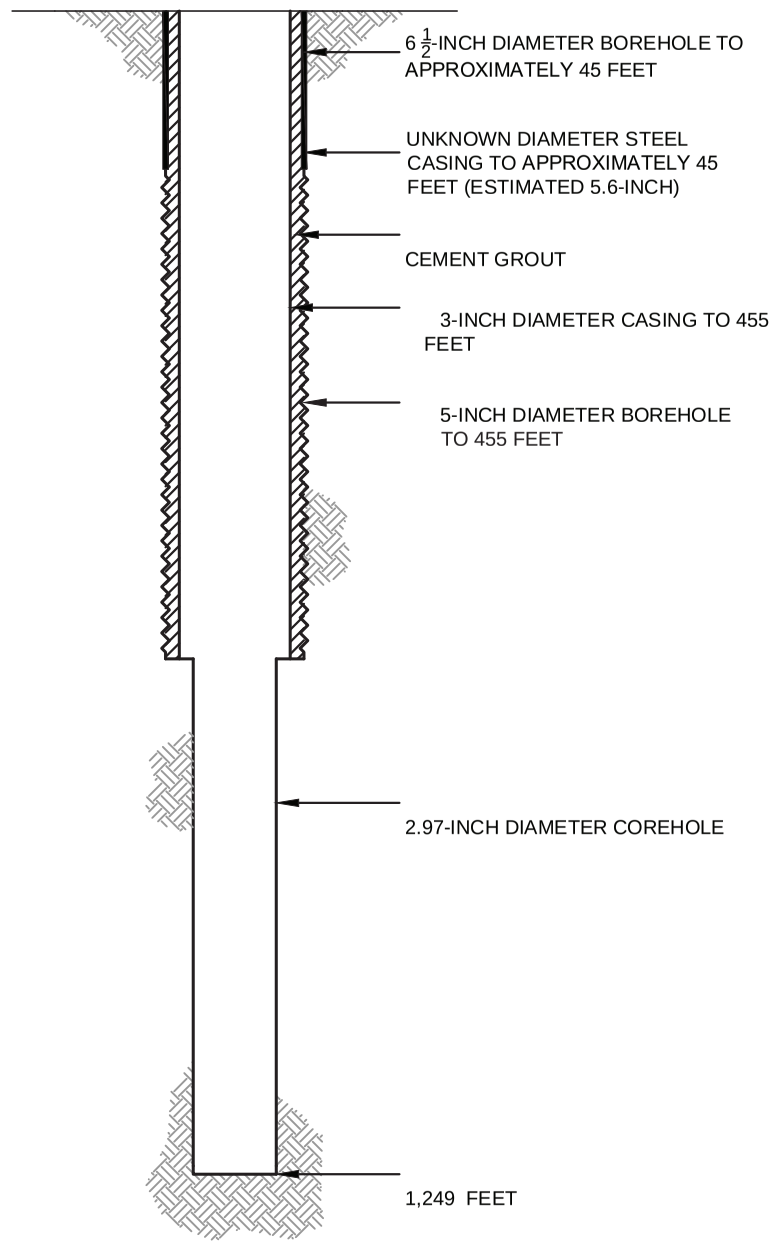

PROPOSED PLUGGING AND ABANDONMENT COREHOLE MCC553

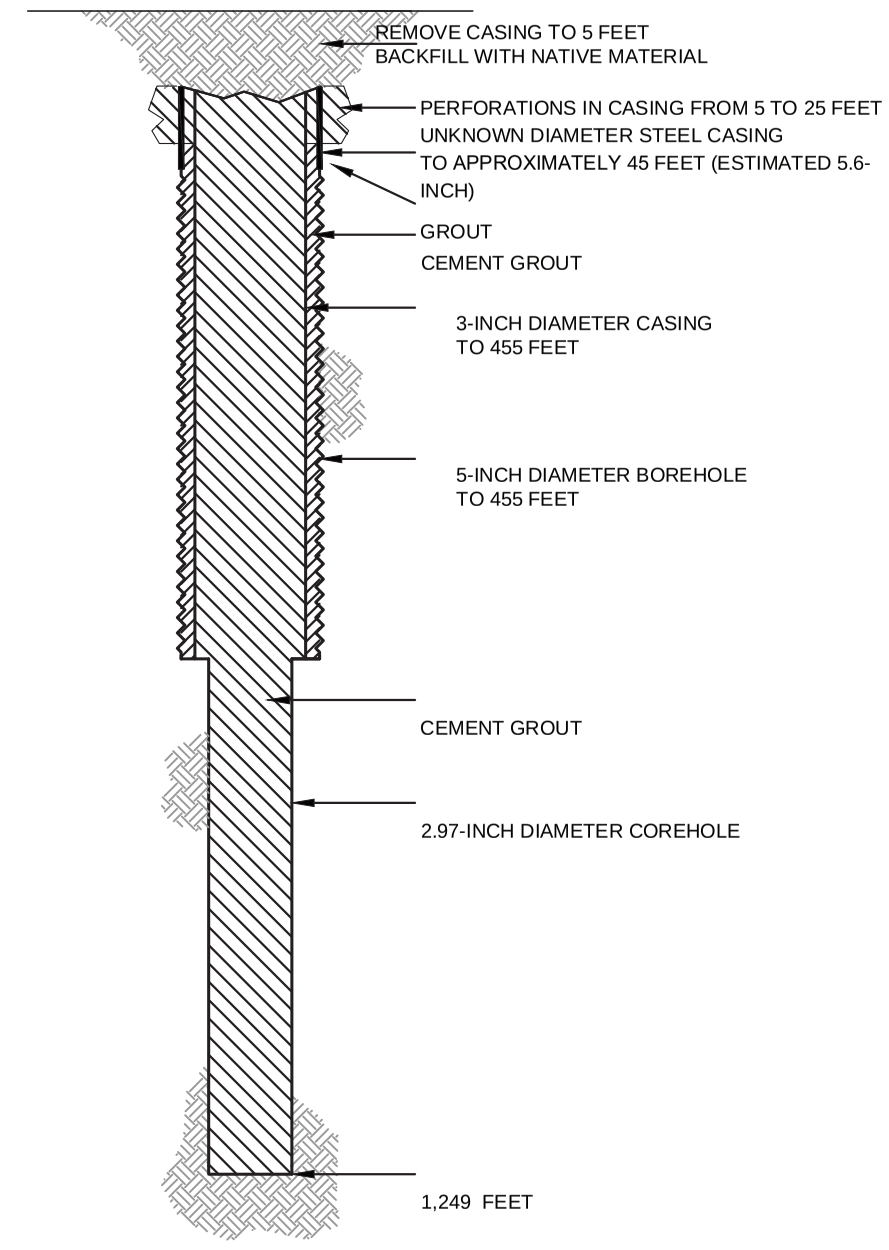

HALEY ALDRICH

FLORENCE COPPER, INC.
FLORENCE, ARIZONA

COREHOLE MCC553 DIAGRAM

FLORENCE COPPER INC.

NOT TO SCALE
SEPTEMBER 2019

FIGURE 1

MOBINI, GITA Printed: 4/21/2017 12:00 PM Layout: ABANDON (2)
\PROJECTS\CURIS RESOURCES38706-CURIS FEASIBILITY\DRAWINGS\EPA\WELL ABANDON\415S_ABANDON.DWG

OMB No. 2040-0042 Approval Expires 4/30/2022

United States Environmental Protection Agency

WELL REWORK RECORD, PLUGGING AND ABANDONMENT PLAN, OR PLUGGING AND ABANDONMENT AFFIDAVIT

Name and Address, Phone Number and/or Email of Permittee

Florence Copper Project
1575 W Hunt Hwy,
Florence, AZ 85132

Permit or EPA ID Number	API Number	Full Well Name
R9UIC-AZ3-FY11-1		MCC554

State	County
Arizona	Pinal

Locate well in two directions from nearest lines of quarter section and drilling unit

Latitude 33.0455937

Surface Location

NE **1/4 of** NW **1/4 of Section** 33 **Township** 4S **Range** 9E

Longitude -111.4313496

_____ **ft. from (N/S)** _____ **Line of quarter section**

_____ **ft. from (E/W)** _____ **Line of quarter section.**

Well Class	Timing of Action (pick one)	Type of Action (pick one)
☐ Class I ☐ Class II ☑ Class III ☐ Class V	☑ Notice Prior to Work Date Expected to Commence March 2021 ☐ Report After Work Date Work Ended	☐ Well Rework ☑ Plugging and Abandonment ☐ Conversion to a Non-Injection Well

Provide a narrative description of the work planned to be performed, or that was performed. Use additional pages as necessary. See instructions.

A workover rig capable of performing the required abandonment operations at the required depths will be moved in and set up over the core hole. The core hole will be inspected to determine the depth to which the hole remains open and if any obstructions are present in the core hole; the presence and condition of any existing collar will also be documented. If necessary, the core hole will be cleaned out to a depth of at least 100 feet below the bedrock-LBFU contact to enable placement of cement seals.

If collar is present, an attempt will be made to remove it. If removal of the collar is not feasible, it will be left in the hole and perforated as needed to allow an annular seal to be placed to a depth of at least 25 feet bgs. In areas of agricultural use, the surface casing will be cut at least 5 feet bgs and removed.

If the collar cannot be removed, it will be perforated from at least 20 feet below the bedrock-LBFU contact to at least 20 feet above the contact; from at least 20 feet below the base of the MFGU to at least 20 feet above the top of the MFGU; and from at least 25 feet bgs to 5 feet bgs.

A tremie pipe will be used to place Type V cement in the open core hole from the bottom of the core hole to the top of the core hole. Cement retainers, as described above, will be used to force cement grout into the annulus and behind perforated intervals, as necessary.

If the hole has been obstructed, as much cement as possible will be placed from 100 feet below the LBFU-bedrock contact to the top of the core hole.

The volume of Type V cement will be recorded and will not be less than the estimated volume of material required to fill each interval. All cement grout will consist of Type V cement, or equivalent approved in accordance with the UIC Permit.

Certification

I certify under the penalty of law that I have personally examined and am familiar with the information submitted in this document and all attachments and that, based on my inquiry of those individuals immediately responsible for obtaining the information, I believe that the information is true, accurate, and complete. I am aware that there are significant penalties for submitting false information, including the possibliity of fine and imprisonment. (Ref. 40 CFR § 144.32)

Name and Official Title *(Please type or print)*	Signature	Date Signed
Dan Johnson, VP - General Manager		10/3/2019

INSTRUCTIONS FOR FORM 7520-19

This form replaces forms 7520-12 and 7520-14. Use this form only when work is planned or has occurred that affects the well's construction or operation as an injection well, including work on the casing, tubing or packer (or for shallow Class V wells, the subsurface fluid emplacement network). Use one form per injection well. While reports or other information developed by contractors or service companies may be attached, this form must be signed by a responsible entity as described at 40 CFR 144.32. Note: operators closing Class V wells should use Form 7520-17.

NAME, ADDRESS, PHONE AND/OR EMAIL OF PERMITTEE: Enter the name and street address, city/town, state, and ZIP code of the permittee. Also provide an email address (if available) and/or a phone number.

PERMIT OR EPA ID NUMBER: Enter the well identification number or permit number assigned to the well by the EPA or the permitting authority.

API NUMBER: Enter the number assigned by the local jurisdiction (usually a State Oil and Gas Agency) using the American Petroleum Institute standard numbering system.

FULL WELL NAME: Enter the full name of the well or project.

Enter the **STATE** and **COUNTY** where the well is located. For States that do not have counties, use the name of that State's equivalent jurisdiction at a more local level.

WELL LOCATION: Fill in the complete township, range, and section to the nearest quarter-quarter section. A township is north or south of the baseline, and a range is east or west of the principal meridian (e.g., T12N, R34W). Also include the distance, in feet, from the nearest north or south line and nearest east or west line of the quarter-section. Also, enter the **latitude** and **longitude** of the well in decimal degrees, to five or six places if possible; be sure to include a negative sign for the longitude of a well in the Western Hemisphere and a negative sign for the latitude of a well in the Southern Hemisphere.

Enter the **WELL CLASS,** i.e., the class of injection well as defined in 40 CFR 144.6.

TIMING OF THE ACTION: Check ***Notice prior to work*** if the activity has not yet occurred (i.e., is planned). Check ***Report after work*** if the activity described has already occurred. As appropriate, include the date the activity is expected to start or the date the activity was completed. (Note this may not be available, e.g., for a plugging plan submitted with a permit application.)

TYPE OF ACTION: Check the appropriate box to describe the kind of activity being reported. Check ***Well Rework*** for work that was/will be performed on the well after it has already been in operation as an injection well. Check ***Plugging and Abandonment*** to report on plans for or descriptions of final closure/plugging after use as an injection well. Check ***Conversion to a Non-Injection Well*** if the well is to be converted to something other than an injection well.

Provide a **NARRATIVE DESCRIPTION** of the work planned to be performed, or that was performed. The narrative should include a description of the main procedures planned or that occurred during the work activity. A service company report, daily report, or similar document may be attached if it includes all the requested information and is clear and legible.

For well reworks, include the following information: The reason for the well rework; depths of activity; type of activity; changes to injection well configuration, well casing, or cement behind casing; any plug added to the well and its depth; any newly drilled interval and its depth; method(s) to demonstrate that the well has mechanical integrity (as applicable); and any deviations from the approved rework plan (as applicable).

For a well plugging plan, include the following information: Reason for the well plugging; number of plugs placed, and their depths; materials used as plugs (e.g., cast iron bridge plug, cement, cement retainer); method to set plugs; and wait-on-cement times, if any. Also provide one or more cost estimates from an independent firm in the business of plugging and abandoning wells to plug the well as described in the plan.

For well plugging affidavit, include the following information: Reason for the well plugging; number of plugs placed, and their depths; materials used as plugs (e.g., cast iron bridge plug, cement, cement retainer); method to set plugs; wait-on-cement times, if any; and any deviations from the approved plugging plan (if applicable).

For conversion to a non-injection well, include the following information: Depths of activity; type of activity; changes to injection well configuration, well casing, or cement behind casing; any plug added to the well and its depth; any newly drilled interval and its depth; depths of new perforations; and method(s) to demonstrate that the well has mechanical integrity (as applicable).

For all of the above activities, include a well sketch depicting the work, results of well tests/logging performed, service company tickets, and any other available information demonstrating how the work was/is to be performed. Also, specify whether depths are below ground surface, relative to Kelly bushing, etc.

CERTIFICATION: This form must be signed and dated by either: a responsible corporate officer for a corporation, by a general partner for a partnership, by the proprietor of a sole proprietorship, or by a principal executive or ranking elected official for a public agency.

PAPERWORK REDUCTION ACT NOTICE: The public reporting and recordkeeping burden for this collection of information is estimated to average between 6.0 and 7.9 hours per response, depending on the injection well class. Burden means the total time, effort, or financial resource expended by persons to generate, maintain, retain, or disclose or provide information to or for a Federal Agency. This includes the time needed to review instructions; develop, acquire, install, and utilize technology and systems for the purposes of collecting, validating, and verifying information, processing and maintaining information, and disclosing and providing information; adjust the existing ways to comply with any previously applicable instructions and requirements; train personnel to be able to respond to the collection of information; search data sources; complete and review the collection of information; and, transmit or otherwise disclose the information. An agency may not conduct or sponsor, and a person is not required to respond to, a collection of information unless it displays a currently valid OMB control number. Send comments on the Agency's need for this information, the accuracy of the provided burden estimates, and any suggested methods for minimizing respondent burden, including the use of automated collection techniques to Director, Collection Strategies Division, U.S. Environmental Protection Agency (2822), 1200 Pennsylvania Ave., NW., Washington, D.C. 20460. Include the OMB control number in any correspondence. Do not send the completed forms to this address.

AS-BUILT COREHOLE MCC554

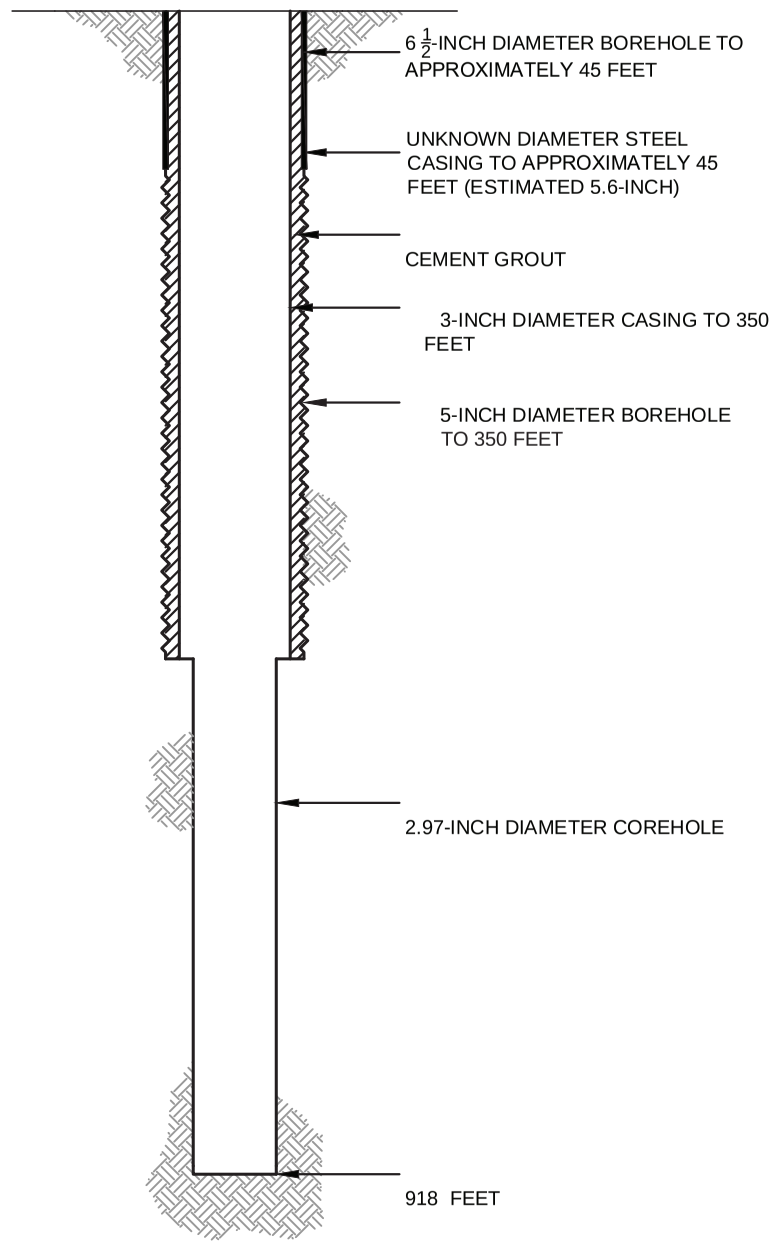

PROPOSED PLUGGING AND ABANDONMENT COREHOLE MCC554

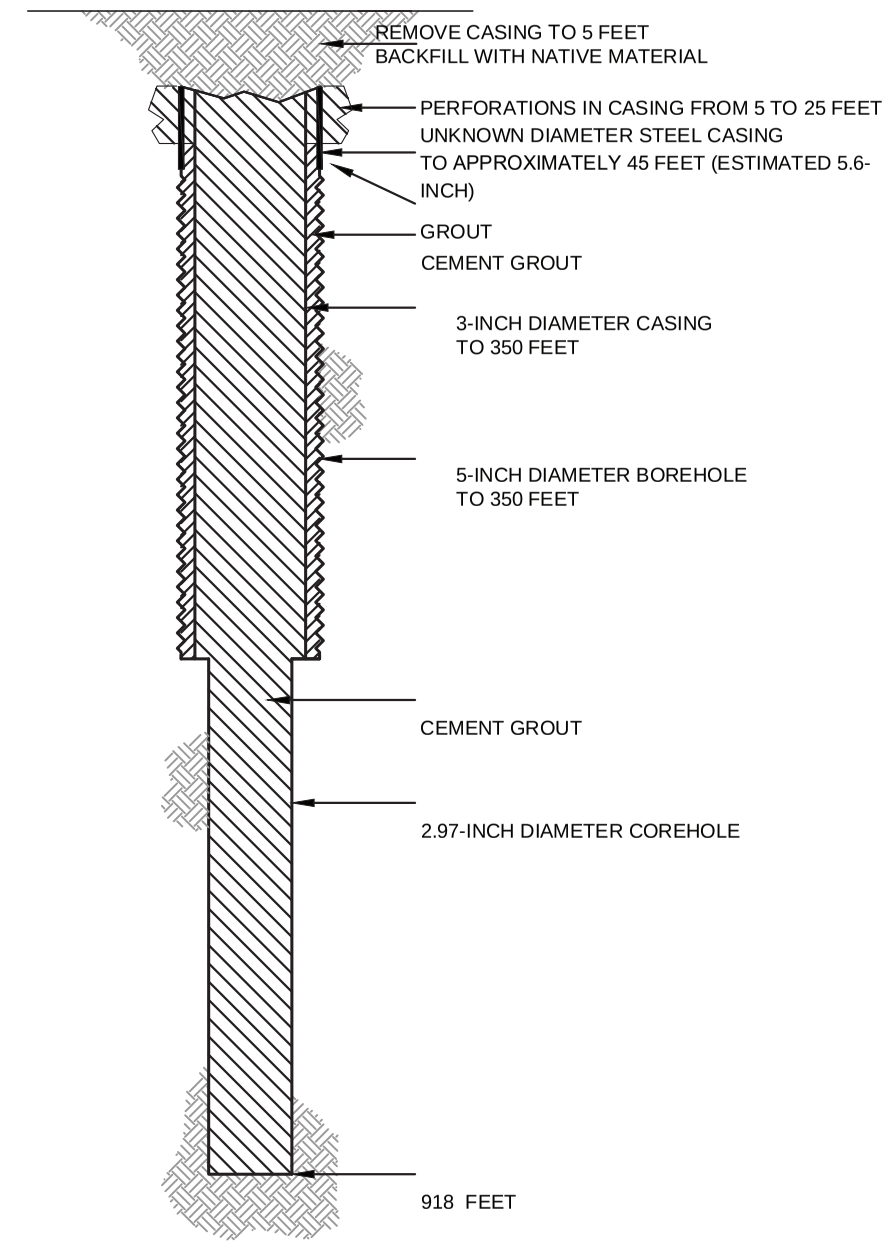

HALEY ALDRICH

FLORENCE COPPER, INC.
FLORENCE, ARIZONA

COREHOLE MCC554 DIAGRAM

FLORENCE COPPER INC.

NOT TO SCALE
SEPTEMBER 2019

FIGURE 1

MOBINI, GITA Printed: 4/21/2017 12:00 PM Layout: ABANDON (2)
\PROJECTS\CURIS RESOURCES38706-CURIS FEASIBILITY\DRAWINGS\EPA\WELL ABANDON\415S_ABANDON.DWG

OMB No. 2040-0042 Approval Expires 4/30/2022

United States Environmental Protection Agency

WELL REWORK RECORD, PLUGGING AND ABANDONMENT PLAN, OR PLUGGING AND ABANDONMENT AFFIDAVIT

Name and Address, Phone Number and/or Email of Permittee

Florence Copper Project
1575 W Hunt Hwy,
Florence, AZ 85132

Permit or EPA ID Number	API Number	Full Well Name
R9UIC-AZ3-FY11-1		MCC555

State	County
Arizona	Pinal

Locate well in two directions from nearest lines of quarter section and drilling unit

Latitude 33.04679182

Longitude -111.4319144

Surface Location

SE **1/4 of** SW **1/4 of Section** 28 **Township** 4S **Range** 9E

_____ **ft. from (N/S)** _____ **Line of quarter section**

_____ **ft. from (E/W)** _____ **Line of quarter section.**

Well Class	Timing of Action (pick one)	Type of Action (pick one)
☐ Class I ☐ Class II ☑ Class III ☐ Class V	☑ Notice Prior to Work Date Expected to Commence March 2021 ☐ Report After Work Date Work Ended	☐ Well Rework ☑ Plugging and Abandonment ☐ Conversion to a Non-Injection Well

Provide a narrative description of the work planned to be performed, or that was performed. Use additional pages as necessary. See instructions.

A workover rig capable of performing the required abandonment operations at the required depths will be moved in and set up over the core hole. The core hole will be inspected to determine the depth to which the hole remains open and if any obstructions are present in the core hole; the presence and condition of any existing collar will also be documented. If necessary, the core hole will be cleaned out to a depth of at least 100 feet below the bedrock-LBFU contact to enable placement of cement seals.

If collar is present, an attempt will be made to remove it. If removal of the collar is not feasible, it will be left in the hole and perforated as needed to allow an annular seal to be placed to a depth of at least 25 feet bgs. In areas of agricultural use, the surface casing will be cut at least 5 feet bgs and removed.

If the collar cannot be removed, it will be perforated from at least 20 feet below the bedrock-LBFU contact to at least 20 feet above the contact; from at least 20 feet below the base of the MFGU to at least 20 feet above the top of the MFGU; and from at least 25 feet bgs to 5 feet bgs.

A tremie pipe will be used to place Type V cement in the open core hole from the bottom of the core hole to the top of the core hole. Cement retainers, as described above, will be used to force cement grout into the annulus and behind perforated intervals, as necessary.

If the hole has been obstructed, as much cement as possible will be placed from 100 feet below the LBFU-bedrock contact to the top of the core hole.

The volume of Type V cement will be recorded and will not be less than the estimated volume of material required to fill each interval. All cement grout will consist of Type V cement, or equivalent approved in accordance with the UIC Permit.

Certification

I certify under the penalty of law that I have personally examined and am familiar with the information submitted in this document and all attachments and that, based on my inquiry of those individuals immediately responsible for obtaining the information, I believe that the information is true, accurate, and complete. I am aware that there are significant penalties for submitting false information, including the possibliity of fine and imprisonment. (Ref. 40 CFR § 144.32)

Name and Official Title *(Please type or print)*	Signature	Date Signed
Dan Johnson, VP - General Manager		10/3/2019

INSTRUCTIONS FOR FORM 7520-19

This form replaces forms 7520-12 and 7520-14. Use this form only when work is planned or has occurred that affects the well's construction or operation as an injection well, including work on the casing, tubing or packer (or for shallow Class V wells, the subsurface fluid emplacement network). Use one form per injection well. While reports or other information developed by contractors or service companies may be attached, this form must be signed by a responsible entity as described at 40 CFR 144.32. Note: operators closing Class V wells should use Form 7520-17.

NAME, ADDRESS, PHONE AND/OR EMAIL OF PERMITTEE: Enter the name and street address, city/town, state, and ZIP code of the permittee. Also provide an email address (if available) and/or a phone number.

PERMIT OR EPA ID NUMBER: Enter the well identification number or permit number assigned to the well by the EPA or the permitting authority.

API NUMBER: Enter the number assigned by the local jurisdiction (usually a State Oil and Gas Agency) using the American Petroleum Institute standard numbering system.

FULL WELL NAME: Enter the full name of the well or project.

Enter the **STATE** and **COUNTY** where the well is located. For States that do not have counties, use the name of that State's equivalent jurisdiction at a more local level.

WELL LOCATION: Fill in the complete township, range, and section to the nearest quarter-quarter section. A township is north or south of the baseline, and a range is east or west of the principal meridian (e.g., T12N, R34W). Also include the distance, in feet, from the nearest north or south line and nearest east or west line of the quarter-section. Also, enter the **latitude** and **longitude** of the well in decimal degrees, to five or six places if possible; be sure to include a negative sign for the longitude of a well in the Western Hemisphere and a negative sign for the latitude of a well in the Southern Hemisphere.

Enter the **WELL CLASS,** i.e., the class of injection well as defined in 40 CFR 144.6.

TIMING OF THE ACTION: Check ***Notice prior to work*** if the activity has not yet occurred (i.e., is planned). Check ***Report after work*** if the activity described has already occurred. As appropriate, include the date the activity is expected to start or the date the activity was completed. (Note this may not be available, e.g., for a plugging plan submitted with a permit application.)

TYPE OF ACTION: Check the appropriate box to describe the kind of activity being reported. Check ***Well Rework*** for work that was/will be performed on the well after it has already been in operation as an injection well. Check ***Plugging and Abandonment*** to report on plans for or descriptions of final closure/plugging after use as an injection well. Check ***Conversion to a Non-Injection Well*** if the well is to be converted to something other than an injection well.

Provide a **NARRATIVE DESCRIPTION** of the work planned to be performed, or that was performed. The narrative should include a description of the main procedures planned or that occurred during the work activity. A service company report, daily report, or similar document may be attached if it includes all the requested information and is clear and legible.

For well reworks, include the following information: The reason for the well rework; depths of activity; type of activity; changes to injection well configuration, well casing, or cement behind casing; any plug added to the well and its depth; any newly drilled interval and its depth; method(s) to demonstrate that the well has mechanical integrity (as applicable); and any deviations from the approved rework plan (as applicable).

For a well plugging plan, include the following information: Reason for the well plugging; number of plugs placed, and their depths; materials used as plugs (e.g., cast iron bridge plug, cement, cement retainer); method to set plugs; and wait-on-cement times, if any. Also provide one or more cost estimates from an independent firm in the business of plugging and abandoning wells to plug the well as described in the plan.

For well plugging affidavit, include the following information: Reason for the well plugging; number of plugs placed, and their depths; materials used as plugs (e.g., cast iron bridge plug, cement, cement retainer); method to set plugs; wait-on-cement times, if any; and any deviations from the approved plugging plan (if applicable).

For conversion to a non-injection well, include the following information: Depths of activity; type of activity; changes to injection well configuration, well casing, or cement behind casing; any plug added to the well and its depth; any newly drilled interval and its depth; depths of new perforations; and method(s) to demonstrate that the well has mechanical integrity (as applicable).

For all of the above activities, include a well sketch depicting the work, results of well tests/logging performed, service company tickets, and any other available information demonstrating how the work was/is to be performed. Also, specify whether depths are below ground surface, relative to Kelly bushing, etc.

CERTIFICATION: This form must be signed and dated by either: a responsible corporate officer for a corporation, by a general partner for a partnership, by the proprietor of a sole proprietorship, or by a principal executive or ranking elected official for a public agency.

PAPERWORK REDUCTION ACT NOTICE: The public reporting and recordkeeping burden for this collection of information is estimated to average between 6.0 and 7.9 hours per response, depending on the injection well class. Burden means the total time, effort, or financial resource expended by persons to generate, maintain, retain, or disclose or provide information to or for a Federal Agency. This includes the time needed to review instructions; develop, acquire, install, and utilize technology and systems for the purposes of collecting, validating, and verifying information, processing and maintaining information, and disclosing and providing information; adjust the existing ways to comply with any previously applicable instructions and requirements; train personnel to be able to respond to the collection of information; search data sources; complete and review the collection of information; and, transmit or otherwise disclose the information. An agency may not conduct or sponsor, and a person is not required to respond to, a collection of information unless it displays a currently valid OMB control number. Send comments on the Agency's need for this information, the accuracy of the provided burden estimates, and any suggested methods for minimizing respondent burden, including the use of automated collection techniques to Director, Collection Strategies Division, U.S. Environmental Protection Agency (2822), 1200 Pennsylvania Ave., NW., Washington, D.C. 20460. Include the OMB control number in any correspondence. Do not send the completed forms to this address.

AS-BUILT COREHOLE MCC555

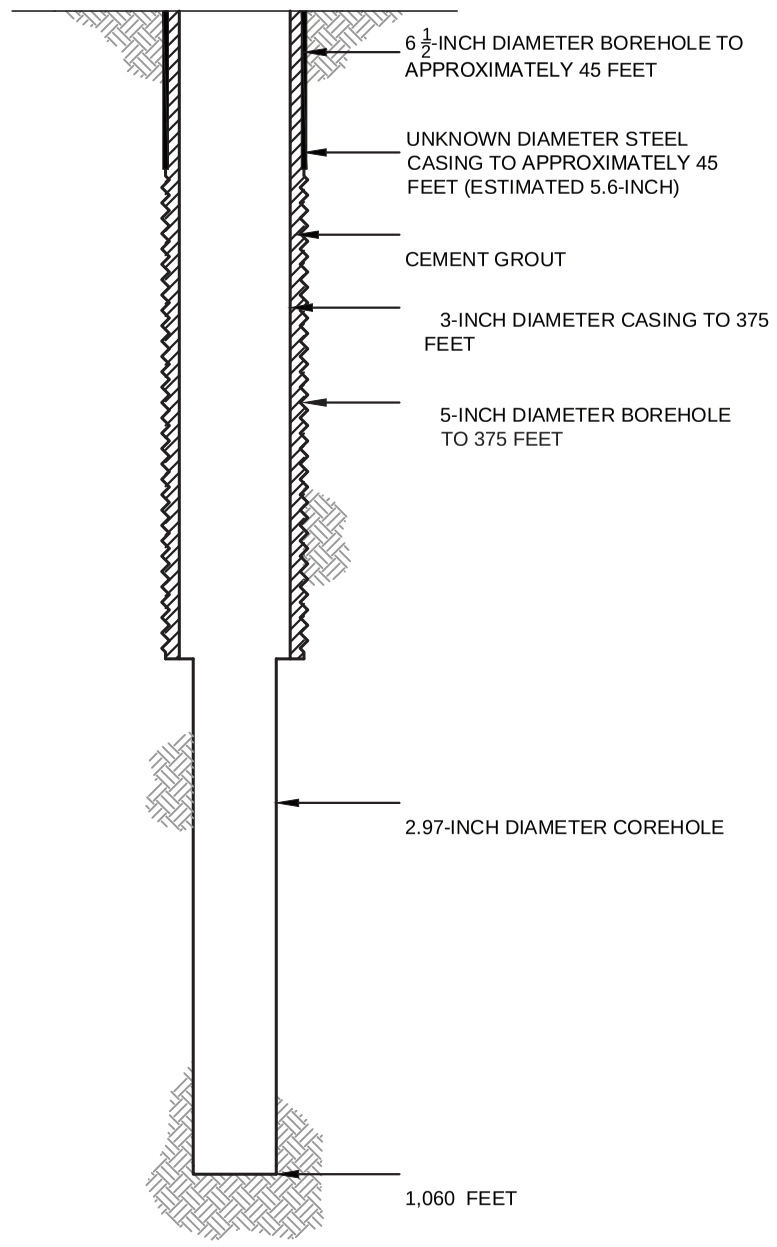

PROPOSED PLUGGING AND ABANDONMENT COREHOLE MCC555

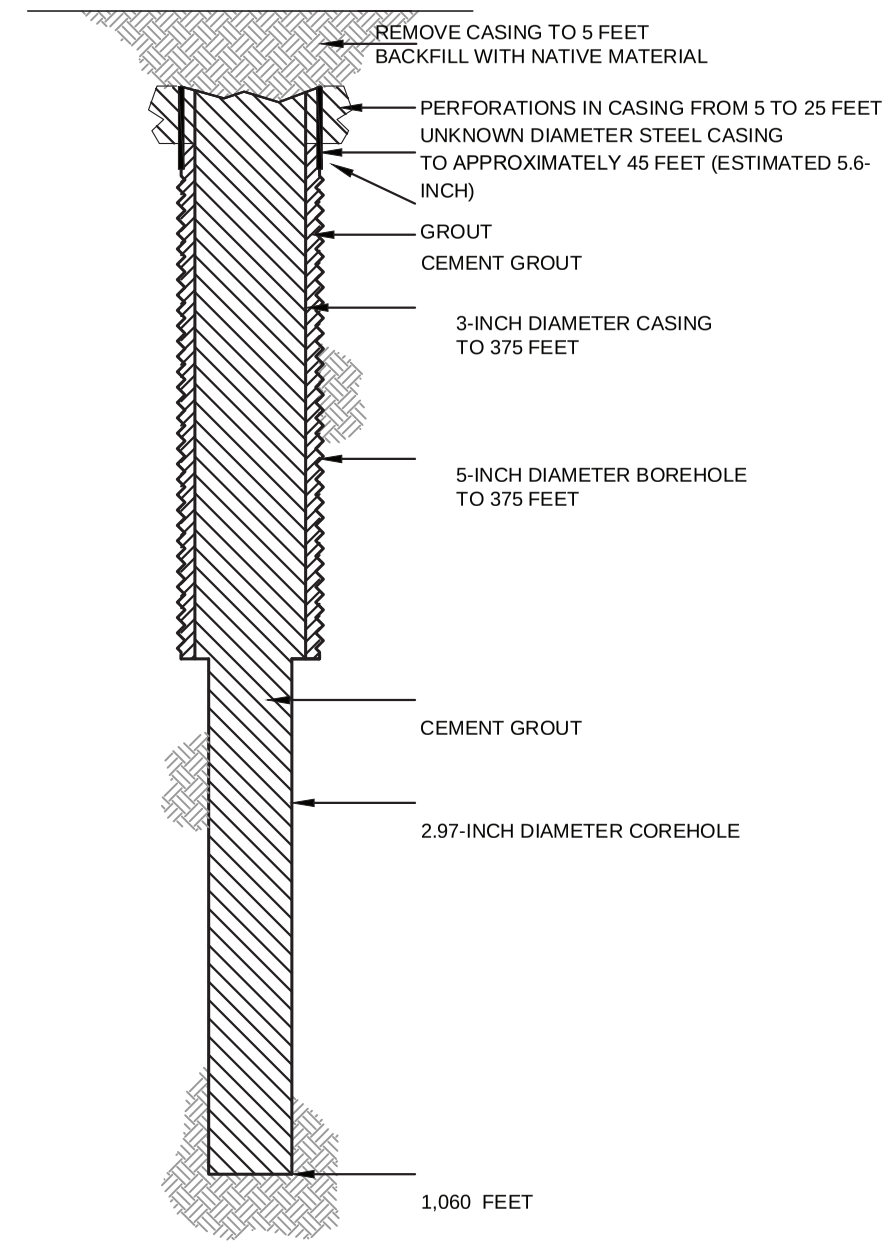

HALEY ALDRICH

FLORENCE COPPER, INC.
FLORENCE, ARIZONA

COREHOLE MCC555 DIAGRAM

FLORENCE COPPER INC.

NOT TO SCALE
SEPTEMBER 2019

FIGURE 1

MOBINI, GITA Printed: 4/21/2017 12:00 PM Layout: ABANDON (2)
\PROJECTS\CURIS RESOURCES38706-CURIS FEASIBILITY\DRAWINGS\EPA\WELL ABANDON\415S_ABANDON.DWG

OMB No. 2040-0042 Approval Expires 4/30/2022

United States Environmental Protection Agency

WELL REWORK RECORD, PLUGGING AND ABANDONMENT PLAN, OR PLUGGING AND ABANDONMENT AFFIDAVIT

Name and Address, Phone Number and/or Email of Permittee

Florence Copper Project
1575 W Hunt Hwy,
Florence, AZ 85132

Permit or EPA ID Number	API Number	Full Well Name
R9UIC-AZ3-FY11-1		MCC556

State	County
Arizona	Pinal

Locate well in two directions from nearest lines of quarter section and drilling unit

Latitude 33.0456953

Surface Location

NE **1/4 of** NW **1/4 of Section** 33 **Township** 4S **Range** 9E

Longitude -111.4329514

_____ **ft. from (N/S)** _____ **Line of quarter section**

_____ **ft. from (E/W)** _____ **Line of quarter section.**

Well Class	Timing of Action (pick one)	Type of Action (pick one)
☐ Class I ☐ Class II ☑ Class III ☐ Class V	☑ Notice Prior to Work Date Expected to Commence March 2021 ☐ Report After Work Date Work Ended	☐ Well Rework ☑ Plugging and Abandonment ☐ Conversion to a Non-Injection Well

Provide a narrative description of the work planned to be performed, or that was performed. Use additional pages as necessary. See instructions.

A workover rig capable of performing the required abandonment operations at the required depths will be moved in and set up over the core hole. The core hole will be inspected to determine the depth to which the hole remains open and if any obstructions are present in the core hole; the presence and condition of any existing collar will also be documented. If necessary, the core hole will be cleaned out to a depth of at least 100 feet below the bedrock-LBFU contact to enable placement of cement seals.

If collar is present, an attempt will be made to remove it. If removal of the collar is not feasible, it will be left in the hole and perforated as needed to allow an annular seal to be placed to a depth of at least 25 feet bgs. In areas of agricultural use, the surface casing will be cut at least 5 feet bgs and removed.

If the collar cannot be removed, it will be perforated from at least 20 feet below the bedrock-LBFU contact to at least 20 feet above the contact; from at least 20 feet below the base of the MFGU to at least 20 feet above the top of the MFGU; and from at least 25 feet bgs to 5 feet bgs.

A tremie pipe will be used to place Type V cement in the open core hole from the bottom of the core hole to the top of the core hole. Cement retainers, as described above, will be used to force cement grout into the annulus and behind perforated intervals, as necessary.

If the hole has been obstructed, as much cement as possible will be placed from 100 feet below the LBFU-bedrock contact to the top of the core hole.

The volume of Type V cement will be recorded and will not be less than the estimated volume of material required to fill each interval. All cement grout will consist of Type V cement, or equivalent approved in accordance with the UIC Permit.

Certification

I certify under the penalty of law that I have personally examined and am familiar with the information submitted in this document and all attachments and that, based on my inquiry of those individuals immediately responsible for obtaining the information, I believe that the information is true, accurate, and complete. I am aware that there are significant penalties for submitting false information, including the possibliity of fine and imprisonment. (Ref. 40 CFR § 144.32)

Name and Official Title *(Please type or print)*	Signature	Date Signed
Dan Johnson, VP - General Manager		10/3/2019

INSTRUCTIONS FOR FORM 7520-19

This form replaces forms 7520-12 and 7520-14. Use this form only when work is planned or has occurred that affects the well's construction or operation as an injection well, including work on the casing, tubing or packer (or for shallow Class V wells, the subsurface fluid emplacement network). Use one form per injection well. While reports or other information developed by contractors or service companies may be attached, this form must be signed by a responsible entity as described at 40 CFR 144.32. Note: operators closing Class V wells should use Form 7520-17.

NAME, ADDRESS, PHONE AND/OR EMAIL OF PERMITTEE: Enter the name and street address, city/town, state, and ZIP code of the permittee. Also provide an email address (if available) and/or a phone number.

PERMIT OR EPA ID NUMBER: Enter the well identification number or permit number assigned to the well by the EPA or the permitting authority.

API NUMBER: Enter the number assigned by the local jurisdiction (usually a State Oil and Gas Agency) using the American Petroleum Institute standard numbering system.

FULL WELL NAME: Enter the full name of the well or project.

Enter the **STATE** and **COUNTY** where the well is located. For States that do not have counties, use the name of that State's equivalent jurisdiction at a more local level.

WELL LOCATION: Fill in the complete township, range, and section to the nearest quarter-quarter section. A township is north or south of the baseline, and a range is east or west of the principal meridian (e.g., T12N, R34W). Also include the distance, in feet, from the nearest north or south line and nearest east or west line of the quarter-section. Also, enter the **latitude** and **longitude** of the well in decimal degrees, to five or six places if possible; be sure to include a negative sign for the longitude of a well in the Western Hemisphere and a negative sign for the latitude of a well in the Southern Hemisphere.

Enter the **WELL CLASS,** i.e., the class of injection well as defined in 40 CFR 144.6.

TIMING OF THE ACTION: Check ***Notice prior to work*** if the activity has not yet occurred (i.e., is planned). Check ***Report after work*** if the activity described has already occurred. As appropriate, include the date the activity is expected to start or the date the activity was completed. (Note this may not be available, e.g., for a plugging plan submitted with a permit application.)

TYPE OF ACTION: Check the appropriate box to describe the kind of activity being reported. Check ***Well Rework*** for work that was/will be performed on the well after it has already been in operation as an injection well. Check ***Plugging and Abandonment*** to report on plans for or descriptions of final closure/plugging after use as an injection well. Check ***Conversion to a Non-Injection Well*** if the well is to be converted to something other than an injection well.

Provide a **NARRATIVE DESCRIPTION** of the work planned to be performed, or that was performed. The narrative should include a description of the main procedures planned or that occurred during the work activity. A service company report, daily report, or similar document may be attached if it includes all the requested information and is clear and legible.

For well reworks, include the following information: The reason for the well rework; depths of activity; type of activity; changes to injection well configuration, well casing, or cement behind casing; any plug added to the well and its depth; any newly drilled interval and its depth; method(s) to demonstrate that the well has mechanical integrity (as applicable); and any deviations from the approved rework plan (as applicable).

For a well plugging plan, include the following information: Reason for the well plugging; number of plugs placed, and their depths; materials used as plugs (e.g., cast iron bridge plug, cement, cement retainer); method to set plugs; and wait-on-cement times, if any. Also provide one or more cost estimates from an independent firm in the business of plugging and abandoning wells to plug the well as described in the plan.

For well plugging affidavit, include the following information: Reason for the well plugging; number of plugs placed, and their depths; materials used as plugs (e.g., cast iron bridge plug, cement, cement retainer); method to set plugs; wait-on-cement times, if any; and any deviations from the approved plugging plan (if applicable).

For conversion to a non-injection well, include the following information: Depths of activity; type of activity; changes to injection well configuration, well casing, or cement behind casing; any plug added to the well and its depth; any newly drilled interval and its depth; depths of new perforations; and method(s) to demonstrate that the well has mechanical integrity (as applicable).

For all of the above activities, include a well sketch depicting the work, results of well tests/logging performed, service company tickets, and any other available information demonstrating how the work was/is to be performed. Also, specify whether depths are below ground surface, relative to Kelly bushing, etc.

CERTIFICATION: This form must be signed and dated by either: a responsible corporate officer for a corporation, by a general partner for a partnership, by the proprietor of a sole proprietorship, or by a principal executive or ranking elected official for a public agency.

PAPERWORK REDUCTION ACT NOTICE: The public reporting and recordkeeping burden for this collection of information is estimated to average between 6.0 and 7.9 hours per response, depending on the injection well class. Burden means the total time, effort, or financial resource expended by persons to generate, maintain, retain, or disclose or provide information to or for a Federal Agency. This includes the time needed to review instructions; develop, acquire, install, and utilize technology and systems for the purposes of collecting, validating, and verifying information, processing and maintaining information, and disclosing and providing information; adjust the existing ways to comply with any previously applicable instructions and requirements; train personnel to be able to respond to the collection of information; search data sources; complete and review the collection of information; and, transmit or otherwise disclose the information. An agency may not conduct or sponsor, and a person is not required to respond to, a collection of information unless it displays a currently valid OMB control number. Send comments on the Agency's need for this information, the accuracy of the provided burden estimates, and any suggested methods for minimizing respondent burden, including the use of automated collection techniques to Director, Collection Strategies Division, U.S. Environmental Protection Agency (2822), 1200 Pennsylvania Ave., NW., Washington, D.C. 20460. Include the OMB control number in any correspondence. Do not send the completed forms to this address.

AS-BUILT COREHOLE MCC556

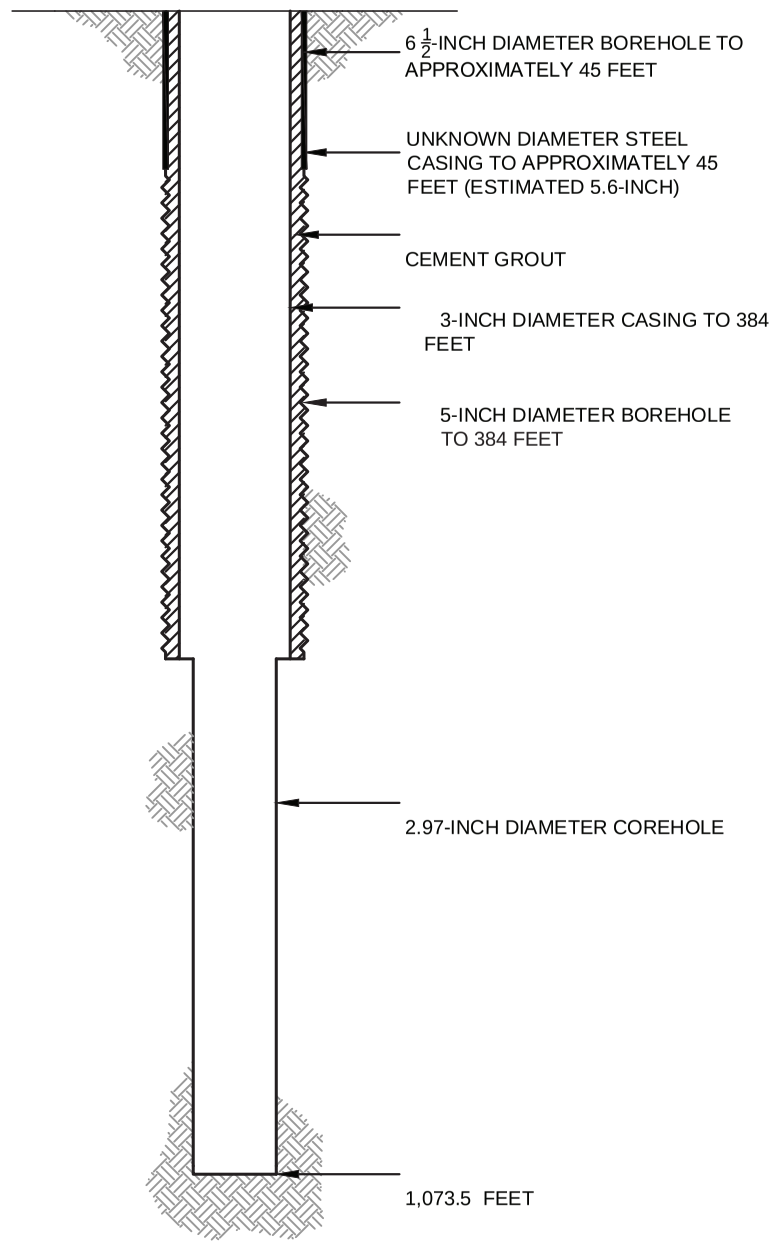

PROPOSED PLUGGING AND ABANDONMENT COREHOLE MCC556

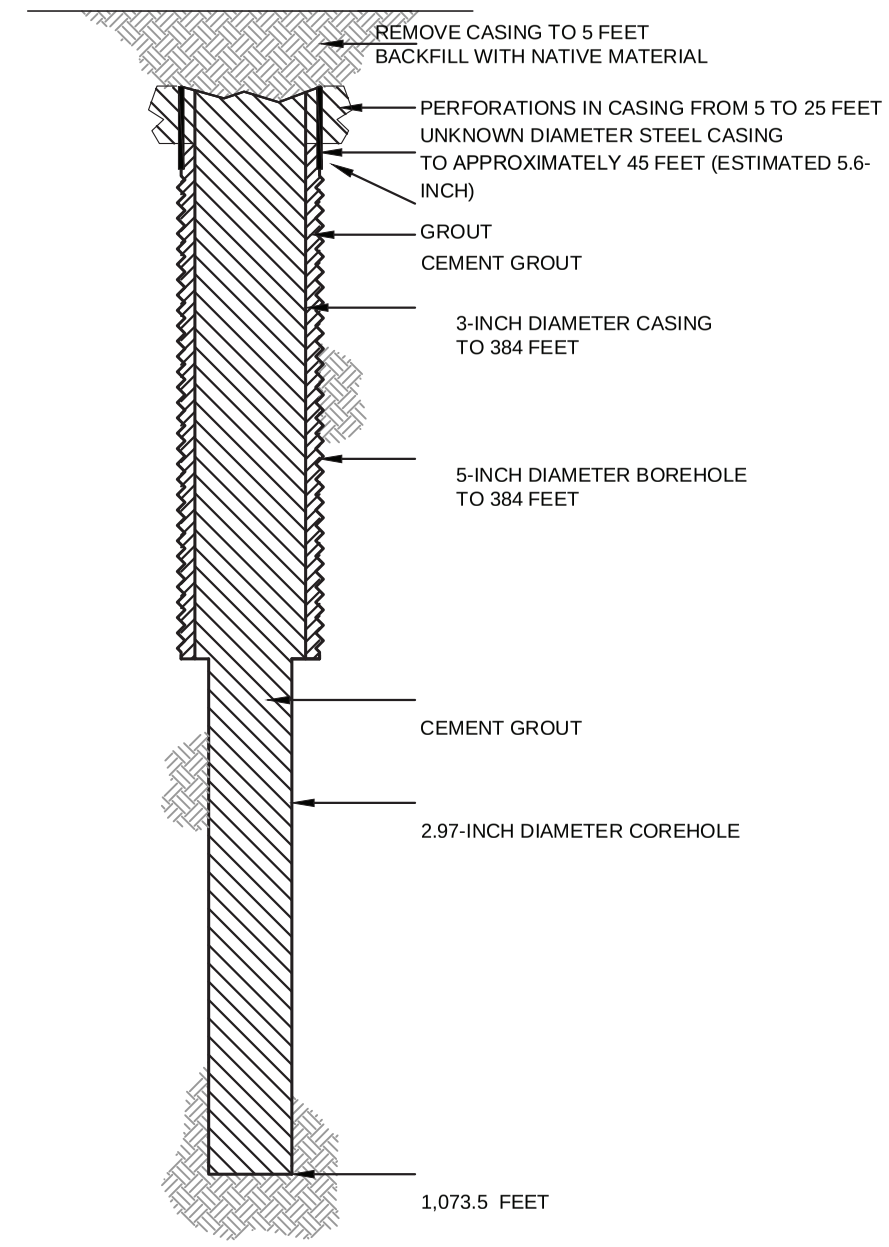

HALEY ALDRICH

FLORENCE COPPER, INC.
FLORENCE, ARIZONA

COREHOLE MCC556 DIAGRAM

FLORENCE COPPER INC.

NOT TO SCALE
SEPTEMBER 2019

FIGURE 1

MOBINI, GITA Printed: 4/21/2017 12:00 PM Layout: ABANDON (2)
\PROJECTS\CURIS RESOURCES38706-CURIS FEASIBILITY\DRAWINGS\EPA\WELL ABANDON\415S_ABANDON.DWG

OMB No. 2040-0042 Approval Expires 4/30/2022

United States Environmental Protection Agency

WELL REWORK RECORD, PLUGGING AND ABANDONMENT PLAN, OR PLUGGING AND ABANDONMENT AFFIDAVIT

Name and Address, Phone Number and/or Email of Permittee

Florence Copper Project
1575 W Hunt Hwy,
Florence, AZ 85132

Permit or EPA ID Number	API Number	Full Well Name
R9UIC-AZ3-FY11-1		MCC557

State	County
Arizona	Pinal

Locate well in two directions from nearest lines of quarter section and drilling unit

Latitude 33.0451285

Surface Location

NE **1/4 of** NW **1/4 of Section** 33 **Township** 4S **Range** 9E

Longitude -111.4330837

_____ **ft. from (N/S)** _____ **Line of quarter section**

_____ **ft. from (E/W)** _____ **Line of quarter section.**

Well Class	Timing of Action (pick one)	Type of Action (pick one)
☐ Class I ☐ Class II ☑ Class III ☐ Class V	☑ Notice Prior to Work Date Expected to Commence March 2021 ☐ Report After Work Date Work Ended	☐ Well Rework ☑ Plugging and Abandonment ☐ Conversion to a Non-Injection Well

Provide a narrative description of the work planned to be performed, or that was performed. Use additional pages as necessary. See instructions.

A workover rig capable of performing the required abandonment operations at the required depths will be moved in and set up over the core hole. The core hole will be inspected to determine the depth to which the hole remains open and if any obstructions are present in the core hole; the presence and condition of any existing collar will also be documented. If necessary, the core hole will be cleaned out to a depth of at least 100 feet below the bedrock-LBFU contact to enable placement of cement seals.

If collar is present, an attempt will be made to remove it. If removal of the collar is not feasible, it will be left in the hole and perforated as needed to allow an annular seal to be placed to a depth of at least 25 feet bgs. In areas of agricultural use, the surface casing will be cut at least 5 feet bgs and removed.

If the collar cannot be removed, it will be perforated from at least 20 feet below the bedrock-LBFU contact to at least 20 feet above the contact; from at least 20 feet below the base of the MFGU to at least 20 feet above the top of the MFGU; and from at least 25 feet bgs to 5 feet bgs.

A tremie pipe will be used to place Type V cement in the open core hole from the bottom of the core hole to the top of the core hole. Cement retainers, as described above, will be used to force cement grout into the annulus and behind perforated intervals, as necessary.

If the hole has been obstructed, as much cement as possible will be placed from 100 feet below the LBFU-bedrock contact to the top of the core hole.

The volume of Type V cement will be recorded and will not be less than the estimated volume of material required to fill each interval. All cement grout will consist of Type V cement, or equivalent approved in accordance with the UIC Permit.

Certification

I certify under the penalty of law that I have personally examined and am familiar with the information submitted in this document and all attachments and that, based on my inquiry of those individuals immediately responsible for obtaining the information, I believe that the information is true, accurate, and complete. I am aware that there are significant penalties for submitting false information, including the possibliity of fine and imprisonment. (Ref. 40 CFR § 144.32)

Name and Official Title *(Please type or print)*	Signature	Date Signed
Dan Johnson, VP - General Manager		10/3/2019

INSTRUCTIONS FOR FORM 7520-19

This form replaces forms 7520-12 and 7520-14. Use this form only when work is planned or has occurred that affects the well's construction or operation as an injection well, including work on the casing, tubing or packer (or for shallow Class V wells, the subsurface fluid emplacement network). Use one form per injection well. While reports or other information developed by contractors or service companies may be attached, this form must be signed by a responsible entity as described at 40 CFR 144.32. Note: operators closing Class V wells should use Form 7520-17.

NAME, ADDRESS, PHONE AND/OR EMAIL OF PERMITTEE: Enter the name and street address, city/town, state, and ZIP code of the permittee. Also provide an email address (if available) and/or a phone number.

PERMIT OR EPA ID NUMBER: Enter the well identification number or permit number assigned to the well by the EPA or the permitting authority.

API NUMBER: Enter the number assigned by the local jurisdiction (usually a State Oil and Gas Agency) using the American Petroleum Institute standard numbering system.

FULL WELL NAME: Enter the full name of the well or project.

Enter the **STATE** and **COUNTY** where the well is located. For States that do not have counties, use the name of that State's equivalent jurisdiction at a more local level.

WELL LOCATION: Fill in the complete township, range, and section to the nearest quarter-quarter section. A township is north or south of the baseline, and a range is east or west of the principal meridian (e.g., T12N, R34W). Also include the distance, in feet, from the nearest north or south line and nearest east or west line of the quarter-section. Also, enter the **latitude** and **longitude** of the well in decimal degrees, to five or six places if possible; be sure to include a negative sign for the longitude of a well in the Western Hemisphere and a negative sign for the latitude of a well in the Southern Hemisphere.

Enter the **WELL CLASS,** i.e., the class of injection well as defined in 40 CFR 144.6.

TIMING OF THE ACTION: Check ***Notice prior to work*** if the activity has not yet occurred (i.e., is planned). Check ***Report after work*** if the activity described has already occurred. As appropriate, include the date the activity is expected to start or the date the activity was completed. (Note this may not be available, e.g., for a plugging plan submitted with a permit application.)

TYPE OF ACTION: Check the appropriate box to describe the kind of activity being reported. Check ***Well Rework*** for work that was/will be performed on the well after it has already been in operation as an injection well. Check ***Plugging and Abandonment*** to report on plans for or descriptions of final closure/plugging after use as an injection well. Check ***Conversion to a Non-Injection Well*** if the well is to be converted to something other than an injection well.

Provide a **NARRATIVE DESCRIPTION** of the work planned to be performed, or that was performed. The narrative should include a description of the main procedures planned or that occurred during the work activity. A service company report, daily report, or similar document may be attached if it includes all the requested information and is clear and legible.

For well reworks, include the following information: The reason for the well rework; depths of activity; type of activity; changes to injection well configuration, well casing, or cement behind casing; any plug added to the well and its depth; any newly drilled interval and its depth; method(s) to demonstrate that the well has mechanical integrity (as applicable); and any deviations from the approved rework plan (as applicable).

For a well plugging plan, include the following information: Reason for the well plugging; number of plugs placed, and their depths; materials used as plugs (e.g., cast iron bridge plug, cement, cement retainer); method to set plugs; and wait-on-cement times, if any. Also provide one or more cost estimates from an independent firm in the business of plugging and abandoning wells to plug the well as described in the plan.

For well plugging affidavit, include the following information: Reason for the well plugging; number of plugs placed, and their depths; materials used as plugs (e.g., cast iron bridge plug, cement, cement retainer); method to set plugs; wait-on-cement times, if any; and any deviations from the approved plugging plan (if applicable).

For conversion to a non-injection well, include the following information: Depths of activity; type of activity; changes to injection well configuration, well casing, or cement behind casing; any plug added to the well and its depth; any newly drilled interval and its depth; depths of new perforations; and method(s) to demonstrate that the well has mechanical integrity (as applicable).

For all of the above activities, include a well sketch depicting the work, results of well tests/logging performed, service company tickets, and any other available information demonstrating how the work was/is to be performed. Also, specify whether depths are below ground surface, relative to Kelly bushing, etc.

CERTIFICATION: This form must be signed and dated by either: a responsible corporate officer for a corporation, by a general partner for a partnership, by the proprietor of a sole proprietorship, or by a principal executive or ranking elected official for a public agency.

PAPERWORK REDUCTION ACT NOTICE: The public reporting and recordkeeping burden for this collection of information is estimated to average between 6.0 and 7.9 hours per response, depending on the injection well class. Burden means the total time, effort, or financial resource expended by persons to generate, maintain, retain, or disclose or provide information to or for a Federal Agency. This includes the time needed to review instructions; develop, acquire, install, and utilize technology and systems for the purposes of collecting, validating, and verifying information, processing and maintaining information, and disclosing and providing information; adjust the existing ways to comply with any previously applicable instructions and requirements; train personnel to be able to respond to the collection of information; search data sources; complete and review the collection of information; and, transmit or otherwise disclose the information. An agency may not conduct or sponsor, and a person is not required to respond to, a collection of information unless it displays a currently valid OMB control number. Send comments on the Agency's need for this information, the accuracy of the provided burden estimates, and any suggested methods for minimizing respondent burden, including the use of automated collection techniques to Director, Collection Strategies Division, U.S. Environmental Protection Agency (2822), 1200 Pennsylvania Ave., NW., Washington, D.C. 20460. Include the OMB control number in any correspondence. Do not send the completed forms to this address.

AS-BUILT COREHOLE MCC557

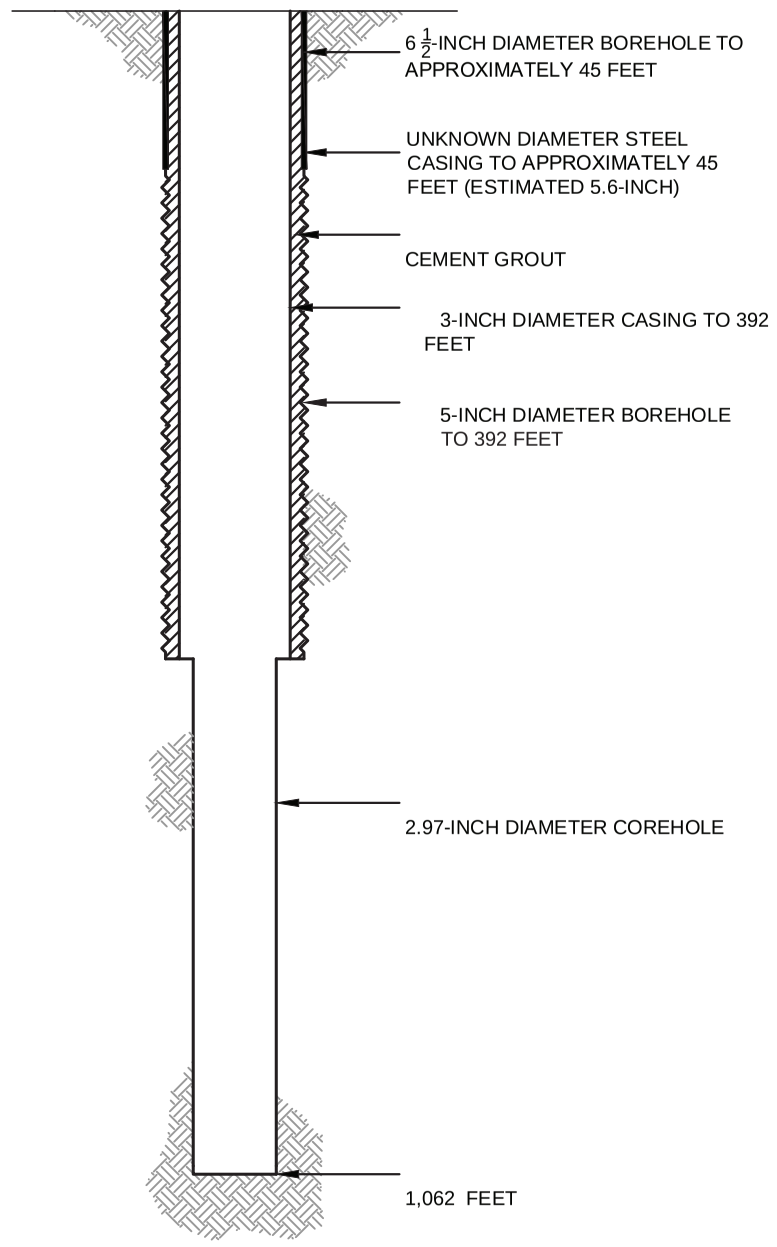

PROPOSED PLUGGING AND ABANDONMENT COREHOLE MCC557

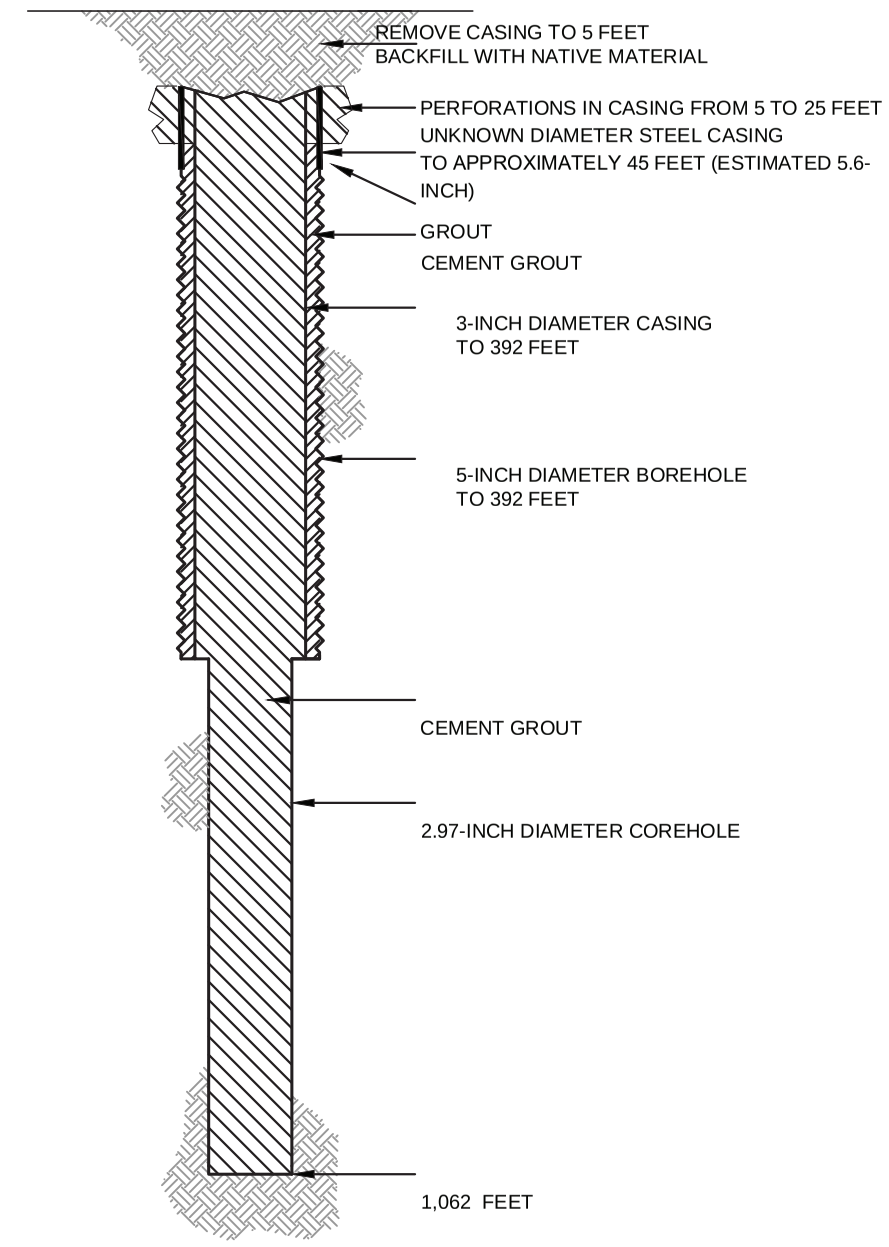

HALEY ALDRICH

FLORENCE COPPER, INC.
FLORENCE, ARIZONA

COREHOLE MCC557 DIAGRAM

FLORENCE COPPER INC.

NOT TO SCALE
SEPTEMBER 2019

FIGURE 1

MOBINI, GITA Printed: 4/21/2017 12:00 PM Layout: ABANDON (2)
\PROJECTS\CURIS RESOURCES38706-CURIS FEASIBILITY\DRAWINGS\EPA\WELL ABANDON\415S_ABANDON.DWG

OMB No. 2040-0042 Approval Expires 4/30/2022

United States Environmental Protection Agency

WELL REWORK RECORD, PLUGGING AND ABANDONMENT PLAN, OR PLUGGING AND ABANDONMENT AFFIDAVIT

Name and Address, Phone Number and/or Email of Permittee

Florence Copper Project
1575 W Hunt Hwy,
Florence, AZ 85132

Permit or EPA ID Number	API Number	Full Well Name
R9UIC-AZ3-FY11-1		MCC558

State	County
Arizona	Pinal

Locate well in two directions from nearest lines of quarter section and drilling unit

Latitude 33.04508071

Surface Location

NE **1/4 of** NW **1/4 of Section** 33 **Township** 4S **Range** 9E

Longitude -111.431465

_____ **ft. from (N/S)** _____ **Line of quarter section**

_____ **ft. from (E/W)** _____ **Line of quarter section.**

Well Class	Timing of Action (pick one)	Type of Action (pick one)
☐ Class I ☐ Class II ☑ Class III ☐ Class V	☑ Notice Prior to Work Date Expected to Commence March 2021 ☐ Report After Work Date Work Ended	☐ Well Rework ☑ Plugging and Abandonment ☐ Conversion to a Non-Injection Well

Provide a narrative description of the work planned to be performed, or that was performed. Use additional pages as necessary. See instructions.

A workover rig capable of performing the required abandonment operations at the required depths will be moved in and set up over the core hole. The core hole will be inspected to determine the depth to which the hole remains open and if any obstructions are present in the core hole; the presence and condition of any existing collar will also be documented. If necessary, the core hole will be cleaned out to a depth of at least 100 feet below the bedrock-LBFU contact to enable placement of cement seals.

If collar is present, an attempt will be made to remove it. If removal of the collar is not feasible, it will be left in the hole and perforated as needed to allow an annular seal to be placed to a depth of at least 25 feet bgs. In areas of agricultural use, the surface casing will be cut at least 5 feet bgs and removed.

If the collar cannot be removed, it will be perforated from at least 20 feet below the bedrock-LBFU contact to at least 20 feet above the contact; from at least 20 feet below the base of the MFGU to at least 20 feet above the top of the MFGU; and from at least 25 feet bgs to 5 feet bgs.

A tremie pipe will be used to place Type V cement in the open core hole from the bottom of the core hole to the top of the core hole. Cement retainers, as described above, will be used to force cement grout into the annulus and behind perforated intervals, as necessary.

If the hole has been obstructed, as much cement as possible will be placed from 100 feet below the LBFU-bedrock contact to the top of the core hole.

The volume of Type V cement will be recorded and will not be less than the estimated volume of material required to fill each interval. All cement grout will consist of Type V cement, or equivalent approved in accordance with the UIC Permit.

Certification

I certify under the penalty of law that I have personally examined and am familiar with the information submitted in this document and all attachments and that, based on my inquiry of those individuals immediately responsible for obtaining the information, I believe that the information is true, accurate, and complete. I am aware that there are significant penalties for submitting false information, including the possibliity of fine and imprisonment. (Ref. 40 CFR § 144.32)

Name and Official Title *(Please type or print)*	Signature	Date Signed
Dan Johnson, VP - General Manager		10/3/2019

INSTRUCTIONS FOR FORM 7520-19

This form replaces forms 7520-12 and 7520-14. Use this form only when work is planned or has occurred that affects the well's construction or operation as an injection well, including work on the casing, tubing or packer (or for shallow Class V wells, the subsurface fluid emplacement network). Use one form per injection well. While reports or other information developed by contractors or service companies may be attached, this form must be signed by a responsible entity as described at 40 CFR 144.32. Note: operators closing Class V wells should use Form 7520-17.

NAME, ADDRESS, PHONE AND/OR EMAIL OF PERMITTEE: Enter the name and street address, city/town, state, and ZIP code of the permittee. Also provide an email address (if available) and/or a phone number.

PERMIT OR EPA ID NUMBER: Enter the well identification number or permit number assigned to the well by the EPA or the permitting authority.

API NUMBER: Enter the number assigned by the local jurisdiction (usually a State Oil and Gas Agency) using the American Petroleum Institute standard numbering system.

FULL WELL NAME: Enter the full name of the well or project.

Enter the **STATE** and **COUNTY** where the well is located. For States that do not have counties, use the name of that State's equivalent jurisdiction at a more local level.

WELL LOCATION: Fill in the complete township, range, and section to the nearest quarter-quarter section. A township is north or south of the baseline, and a range is east or west of the principal meridian (e.g., T12N, R34W). Also include the distance, in feet, from the nearest north or south line and nearest east or west line of the quarter-section. Also, enter the **latitude** and **longitude** of the well in decimal degrees, to five or six places if possible; be sure to include a negative sign for the longitude of a well in the Western Hemisphere and a negative sign for the latitude of a well in the Southern Hemisphere.

Enter the **WELL CLASS,** i.e., the class of injection well as defined in 40 CFR 144.6.

TIMING OF THE ACTION: Check ***Notice prior to work*** if the activity has not yet occurred (i.e., is planned). Check ***Report after work*** if the activity described has already occurred. As appropriate, include the date the activity is expected to start or the date the activity was completed. (Note this may not be available, e.g., for a plugging plan submitted with a permit application.)

TYPE OF ACTION: Check the appropriate box to describe the kind of activity being reported. Check ***Well Rework*** for work that was/will be performed on the well after it has already been in operation as an injection well. Check ***Plugging and Abandonment*** to report on plans for or descriptions of final closure/plugging after use as an injection well. Check ***Conversion to a Non-Injection Well*** if the well is to be converted to something other than an injection well.

Provide a **NARRATIVE DESCRIPTION** of the work planned to be performed, or that was performed. The narrative should include a description of the main procedures planned or that occurred during the work activity. A service company report, daily report, or similar document may be attached if it includes all the requested information and is clear and legible.

For well reworks, include the following information: The reason for the well rework; depths of activity; type of activity; changes to injection well configuration, well casing, or cement behind casing; any plug added to the well and its depth; any newly drilled interval and its depth; method(s) to demonstrate that the well has mechanical integrity (as applicable); and any deviations from the approved rework plan (as applicable).

For a well plugging plan, include the following information: Reason for the well plugging; number of plugs placed, and their depths; materials used as plugs (e.g., cast iron bridge plug, cement, cement retainer); method to set plugs; and wait-on-cement times, if any. Also provide one or more cost estimates from an independent firm in the business of plugging and abandoning wells to plug the well as described in the plan.

For well plugging affidavit, include the following information: Reason for the well plugging; number of plugs placed, and their depths; materials used as plugs (e.g., cast iron bridge plug, cement, cement retainer); method to set plugs; wait-on-cement times, if any; and any deviations from the approved plugging plan (if applicable).

For conversion to a non-injection well, include the following information: Depths of activity; type of activity; changes to injection well configuration, well casing, or cement behind casing; any plug added to the well and its depth; any newly drilled interval and its depth; depths of new perforations; and method(s) to demonstrate that the well has mechanical integrity (as applicable).

For all of the above activities, include a well sketch depicting the work, results of well tests/logging performed, service company tickets, and any other available information demonstrating how the work was/is to be performed. Also, specify whether depths are below ground surface, relative to Kelly bushing, etc.

CERTIFICATION: This form must be signed and dated by either: a responsible corporate officer for a corporation, by a general partner for a partnership, by the proprietor of a sole proprietorship, or by a principal executive or ranking elected official for a public agency.

PAPERWORK REDUCTION ACT NOTICE: The public reporting and recordkeeping burden for this collection of information is estimated to average between 6.0 and 7.9 hours per response, depending on the injection well class. Burden means the total time, effort, or financial resource expended by persons to generate, maintain, retain, or disclose or provide information to or for a Federal Agency. This includes the time needed to review instructions; develop, acquire, install, and utilize technology and systems for the purposes of collecting, validating, and verifying information, processing and maintaining information, and disclosing and providing information; adjust the existing ways to comply with any previously applicable instructions and requirements; train personnel to be able to respond to the collection of information; search data sources; complete and review the collection of information; and, transmit or otherwise disclose the information. An agency may not conduct or sponsor, and a person is not required to respond to, a collection of information unless it displays a currently valid OMB control number. Send comments on the Agency's need for this information, the accuracy of the provided burden estimates, and any suggested methods for minimizing respondent burden, including the use of automated collection techniques to Director, Collection Strategies Division, U.S. Environmental Protection Agency (2822), 1200 Pennsylvania Ave., NW., Washington, D.C. 20460. Include the OMB control number in any correspondence. Do not send the completed forms to this address.

OMB No. 2040-0042 Approval Expires 4/30/2022

United States Environmental Protection Agency

WELL REWORK RECORD, PLUGGING AND ABANDONMENT PLAN, OR PLUGGING AND ABANDONMENT AFFIDAVIT

Name and Address, Phone Number and/or Email of Permittee

Florence Copper Project
1575 W Hunt Hwy,
Florence, AZ 85132

Permit or EPA ID Number	API Number	Full Well Name
R9UIC-AZ3-FY11-1		MCC559

State	County
Arizona	Pinal

Locate well in two directions from nearest lines of quarter section and drilling unit

Latitude 33.04443321

Surface Location

NE **1/4 of** NW **1/4 of Section** 33 **Township** 4S **Range** 9E

Longitude -111.433468

_____ **ft. from (N/S)** _____ **Line of quarter section**

_____ **ft. from (E/W)** _____ **Line of quarter section.**

Well Class	Timing of Action (pick one)	Type of Action (pick one)
☐ Class I ☐ Class II ☑ Class III ☐ Class V	☑ Notice Prior to Work Date Expected to Commence March 2021 ☐ Report After Work Date Work Ended	☐ Well Rework ☑ Plugging and Abandonment ☐ Conversion to a Non-Injection Well

Provide a narrative description of the work planned to be performed, or that was performed. Use additional pages as necessary. See instructions.

A workover rig capable of performing the required abandonment operations at the required depths will be moved in and set up over the core hole. The core hole will be inspected to determine the depth to which the hole remains open and if any obstructions are present in the core hole; the presence and condition of any existing collar will also be documented. If necessary, the core hole will be cleaned out to a depth of at least 100 feet below the bedrock-LBFU contact to enable placement of cement seals.

If collar is present, an attempt will be made to remove it. If removal of the collar is not feasible, it will be left in the hole and perforated as needed to allow an annular seal to be placed to a depth of at least 25 feet bgs. In areas of agricultural use, the surface casing will be cut at least 5 feet bgs and removed.

If the collar cannot be removed, it will be perforated from at least 20 feet below the bedrock-LBFU contact to at least 20 feet above the contact; from at least 20 feet below the base of the MFGU to at least 20 feet above the top of the MFGU; and from at least 25 feet bgs to 5 feet bgs.

A tremie pipe will be used to place Type V cement in the open core hole from the bottom of the core hole to the top of the core hole. Cement retainers, as described above, will be used to force cement grout into the annulus and behind perforated intervals, as necessary.

If the hole has been obstructed, as much cement as possible will be placed from 100 feet below the LBFU-bedrock contact to the top of the core hole.

The volume of Type V cement will be recorded and will not be less than the estimated volume of material required to fill each interval. All cement grout will consist of Type V cement, or equivalent approved in accordance with the UIC Permit.

Certification

I certify under the penalty of law that I have personally examined and am familiar with the information submitted in this document and all attachments and that, based on my inquiry of those individuals immediately responsible for obtaining the information, I believe that the information is true, accurate, and complete. I am aware that there are significant penalties for submitting false information, including the possibliity of fine and imprisonment. (Ref. 40 CFR § 144.32)

Name and Official Title *(Please type or print)*	Signature	Date Signed
Dan Johnson, VP - General Manager		10/3/2019

INSTRUCTIONS FOR FORM 7520-19

This form replaces forms 7520-12 and 7520-14. Use this form only when work is planned or has occurred that affects the well's construction or operation as an injection well, including work on the casing, tubing or packer (or for shallow Class V wells, the subsurface fluid emplacement network). Use one form per injection well. While reports or other information developed by contractors or service companies may be attached, this form must be signed by a responsible entity as described at 40 CFR 144.32. Note: operators closing Class V wells should use Form 7520-17.

NAME, ADDRESS, PHONE AND/OR EMAIL OF PERMITTEE: Enter the name and street address, city/town, state, and ZIP code of the permittee. Also provide an email address (if available) and/or a phone number.

PERMIT OR EPA ID NUMBER: Enter the well identification number or permit number assigned to the well by the EPA or the permitting authority.

API NUMBER: Enter the number assigned by the local jurisdiction (usually a State Oil and Gas Agency) using the American Petroleum Institute standard numbering system.

FULL WELL NAME: Enter the full name of the well or project.

Enter the **STATE** and **COUNTY** where the well is located. For States that do not have counties, use the name of that State's equivalent jurisdiction at a more local level.

WELL LOCATION: Fill in the complete township, range, and section to the nearest quarter-quarter section. A township is north or south of the baseline, and a range is east or west of the principal meridian (e.g., T12N, R34W). Also include the distance, in feet, from the nearest north or south line and nearest east or west line of the quarter-section. Also, enter the **latitude** and **longitude** of the well in decimal degrees, to five or six places if possible; be sure to include a negative sign for the longitude of a well in the Western Hemisphere and a negative sign for the latitude of a well in the Southern Hemisphere.

Enter the **WELL CLASS,** i.e., the class of injection well as defined in 40 CFR 144.6.

TIMING OF THE ACTION: Check ***Notice prior to work*** if the activity has not yet occurred (i.e., is planned). Check ***Report after work*** if the activity described has already occurred. As appropriate, include the date the activity is expected to start or the date the activity was completed. (Note this may not be available, e.g., for a plugging plan submitted with a permit application.)

TYPE OF ACTION: Check the appropriate box to describe the kind of activity being reported. Check ***Well Rework*** for work that was/will be performed on the well after it has already been in operation as an injection well. Check ***Plugging and Abandonment*** to report on plans for or descriptions of final closure/plugging after use as an injection well. Check ***Conversion to a Non-Injection Well*** if the well is to be converted to something other than an injection well.

Provide a **NARRATIVE DESCRIPTION** of the work planned to be performed, or that was performed. The narrative should include a description of the main procedures planned or that occurred during the work activity. A service company report, daily report, or similar document may be attached if it includes all the requested information and is clear and legible.

For well reworks, include the following information: The reason for the well rework; depths of activity; type of activity; changes to injection well configuration, well casing, or cement behind casing; any plug added to the well and its depth; any newly drilled interval and its depth; method(s) to demonstrate that the well has mechanical integrity (as applicable); and any deviations from the approved rework plan (as applicable).

For a well plugging plan, include the following information: Reason for the well plugging; number of plugs placed, and their depths; materials used as plugs (e.g., cast iron bridge plug, cement, cement retainer); method to set plugs; and wait-on-cement times, if any. Also provide one or more cost estimates from an independent firm in the business of plugging and abandoning wells to plug the well as described in the plan.

For well plugging affidavit, include the following information: Reason for the well plugging; number of plugs placed, and their depths; materials used as plugs (e.g., cast iron bridge plug, cement, cement retainer); method to set plugs; wait-on-cement times, if any; and any deviations from the approved plugging plan (if applicable).

For conversion to a non-injection well, include the following information: Depths of activity; type of activity; changes to injection well configuration, well casing, or cement behind casing; any plug added to the well and its depth; any newly drilled interval and its depth; depths of new perforations; and method(s) to demonstrate that the well has mechanical integrity (as applicable).

For all of the above activities, include a well sketch depicting the work, results of well tests/logging performed, service company tickets, and any other available information demonstrating how the work was/is to be performed. Also, specify whether depths are below ground surface, relative to Kelly bushing, etc.

CERTIFICATION: This form must be signed and dated by either: a responsible corporate officer for a corporation, by a general partner for a partnership, by the proprietor of a sole proprietorship, or by a principal executive or ranking elected official for a public agency.

PAPERWORK REDUCTION ACT NOTICE: The public reporting and recordkeeping burden for this collection of information is estimated to average between 6.0 and 7.9 hours per response, depending on the injection well class. Burden means the total time, effort, or financial resource expended by persons to generate, maintain, retain, or disclose or provide information to or for a Federal Agency. This includes the time needed to review instructions; develop, acquire, install, and utilize technology and systems for the purposes of collecting, validating, and verifying information, processing and maintaining information, and disclosing and providing information; adjust the existing ways to comply with any previously applicable instructions and requirements; train personnel to be able to respond to the collection of information; search data sources; complete and review the collection of information; and, transmit or otherwise disclose the information. An agency may not conduct or sponsor, and a person is not required to respond to, a collection of information unless it displays a currently valid OMB control number. Send comments on the Agency's need for this information, the accuracy of the provided burden estimates, and any suggested methods for minimizing respondent burden, including the use of automated collection techniques to Director, Collection Strategies Division, U.S. Environmental Protection Agency (2822), 1200 Pennsylvania Ave., NW., Washington, D.C. 20460. Include the OMB control number in any correspondence. Do not send the completed forms to this address.

OMB No. 2040-0042 Approval Expires 4/30/2022

United States Environmental Protection Agency

WELL REWORK RECORD, PLUGGING AND ABANDONMENT PLAN, OR PLUGGING AND ABANDONMENT AFFIDAVIT

Name and Address, Phone Number and/or Email of Permittee

Florence Copper Project
1575 W Hunt Hwy,
Florence, AZ 85132

Permit or EPA ID Number	API Number	Full Well Name
R9UIC-AZ3-FY11-1		MCC560

State	County
Arizona	Pinal

Locate well in two directions from nearest lines of quarter section and drilling unit

Latitude 33.04447225

Surface Location

NE **1/4 of** NW **1/4 of Section** 33 **Township** 4S **Range** 9E

Longitude -111.4325472

_____ **ft. from (N/S)** _____ **Line of quarter section**

_____ **ft. from (E/W)** _____ **Line of quarter section.**

Well Class	Timing of Action (pick one)	Type of Action (pick one)
☐ Class I ☐ Class II ☑ Class III ☐ Class V	☑ Notice Prior to Work Date Expected to Commence March 2021 ☐ Report After Work Date Work Ended	☐ Well Rework ☑ Plugging and Abandonment ☐ Conversion to a Non-Injection Well

Provide a narrative description of the work planned to be performed, or that was performed. Use additional pages as necessary. See instructions.

A workover rig capable of performing the required abandonment operations at the required depths will be moved in and set up over the core hole. The core hole will be inspected to determine the depth to which the hole remains open and if any obstructions are present in the core hole; the presence and condition of any existing collar will also be documented. If necessary, the core hole will be cleaned out to a depth of at least 100 feet below the bedrock-LBFU contact to enable placement of cement seals.

If collar is present, an attempt will be made to remove it. If removal of the collar is not feasible, it will be left in the hole and perforated as needed to allow an annular seal to be placed to a depth of at least 25 feet bgs. In areas of agricultural use, the surface casing will be cut at least 5 feet bgs and removed.

If the collar cannot be removed, it will be perforated from at least 20 feet below the bedrock-LBFU contact to at least 20 feet above the contact; from at least 20 feet below the base of the MFGU to at least 20 feet above the top of the MFGU; and from at least 25 feet bgs to 5 feet bgs.

A tremie pipe will be used to place Type V cement in the open core hole from the bottom of the core hole to the top of the core hole. Cement retainers, as described above, will be used to force cement grout into the annulus and behind perforated intervals, as necessary.

If the hole has been obstructed, as much cement as possible will be placed from 100 feet below the LBFU-bedrock contact to the top of the core hole.

The volume of Type V cement will be recorded and will not be less than the estimated volume of material required to fill each interval. All cement grout will consist of Type V cement, or equivalent approved in accordance with the UIC Permit.

Certification

I certify under the penalty of law that I have personally examined and am familiar with the information submitted in this document and all attachments and that, based on my inquiry of those individuals immediately responsible for obtaining the information, I believe that the information is true, accurate, and complete. I am aware that there are significant penalties for submitting false information, including the possibliity of fine and imprisonment. (Ref. 40 CFR § 144.32)

Name and Official Title *(Please type or print)*	Signature	Date Signed
Dan Johnson, VP - General Manager		10/3/2019

INSTRUCTIONS FOR FORM 7520-19

This form replaces forms 7520-12 and 7520-14. Use this form only when work is planned or has occurred that affects the well's construction or operation as an injection well, including work on the casing, tubing or packer (or for shallow Class V wells, the subsurface fluid emplacement network). Use one form per injection well. While reports or other information developed by contractors or service companies may be attached, this form must be signed by a responsible entity as described at 40 CFR 144.32. Note: operators closing Class V wells should use Form 7520-17.

NAME, ADDRESS, PHONE AND/OR EMAIL OF PERMITTEE: Enter the name and street address, city/town, state, and ZIP code of the permittee. Also provide an email address (if available) and/or a phone number.

PERMIT OR EPA ID NUMBER: Enter the well identification number or permit number assigned to the well by the EPA or the permitting authority.

API NUMBER: Enter the number assigned by the local jurisdiction (usually a State Oil and Gas Agency) using the American Petroleum Institute standard numbering system.

FULL WELL NAME: Enter the full name of the well or project.

Enter the **STATE** and **COUNTY** where the well is located. For States that do not have counties, use the name of that State's equivalent jurisdiction at a more local level.

WELL LOCATION: Fill in the complete township, range, and section to the nearest quarter-quarter section. A township is north or south of the baseline, and a range is east or west of the principal meridian (e.g., T12N, R34W). Also include the distance, in feet, from the nearest north or south line and nearest east or west line of the quarter-section. Also, enter the **latitude** and **longitude** of the well in decimal degrees, to five or six places if possible; be sure to include a negative sign for the longitude of a well in the Western Hemisphere and a negative sign for the latitude of a well in the Southern Hemisphere.

Enter the **WELL CLASS,** i.e., the class of injection well as defined in 40 CFR 144.6.

TIMING OF THE ACTION: Check ***Notice prior to work*** if the activity has not yet occurred (i.e., is planned). Check ***Report after work*** if the activity described has already occurred. As appropriate, include the date the activity is expected to start or the date the activity was completed. (Note this may not be available, e.g., for a plugging plan submitted with a permit application.)

TYPE OF ACTION: Check the appropriate box to describe the kind of activity being reported. Check ***Well Rework*** for work that was/will be performed on the well after it has already been in operation as an injection well. Check ***Plugging and Abandonment*** to report on plans for or descriptions of final closure/plugging after use as an injection well. Check ***Conversion to a Non-Injection Well*** if the well is to be converted to something other than an injection well.

Provide a **NARRATIVE DESCRIPTION** of the work planned to be performed, or that was performed. The narrative should include a description of the main procedures planned or that occurred during the work activity. A service company report, daily report, or similar document may be attached if it includes all the requested information and is clear and legible.

For well reworks, include the following information: The reason for the well rework; depths of activity; type of activity; changes to injection well configuration, well casing, or cement behind casing; any plug added to the well and its depth; any newly drilled interval and its depth; method(s) to demonstrate that the well has mechanical integrity (as applicable); and any deviations from the approved rework plan (as applicable).

For a well plugging plan, include the following information: Reason for the well plugging; number of plugs placed, and their depths; materials used as plugs (e.g., cast iron bridge plug, cement, cement retainer); method to set plugs; and wait-on-cement times, if any. Also provide one or more cost estimates from an independent firm in the business of plugging and abandoning wells to plug the well as described in the plan.

For well plugging affidavit, include the following information: Reason for the well plugging; number of plugs placed, and their depths; materials used as plugs (e.g., cast iron bridge plug, cement, cement retainer); method to set plugs; wait-on-cement times, if any; and any deviations from the approved plugging plan (if applicable).

For conversion to a non-injection well, include the following information: Depths of activity; type of activity; changes to injection well configuration, well casing, or cement behind casing; any plug added to the well and its depth; any newly drilled interval and its depth; depths of new perforations; and method(s) to demonstrate that the well has mechanical integrity (as applicable).

For all of the above activities, include a well sketch depicting the work, results of well tests/logging performed, service company tickets, and any other available information demonstrating how the work was/is to be performed. Also, specify whether depths are below ground surface, relative to Kelly bushing, etc.

CERTIFICATION: This form must be signed and dated by either: a responsible corporate officer for a corporation, by a general partner for a partnership, by the proprietor of a sole proprietorship, or by a principal executive or ranking elected official for a public agency.

PAPERWORK REDUCTION ACT NOTICE: The public reporting and recordkeeping burden for this collection of information is estimated to average between 6.0 and 7.9 hours per response, depending on the injection well class. Burden means the total time, effort, or financial resource expended by persons to generate, maintain, retain, or disclose or provide information to or for a Federal Agency. This includes the time needed to review instructions; develop, acquire, install, and utilize technology and systems for the purposes of collecting, validating, and verifying information, processing and maintaining information, and disclosing and providing information; adjust the existing ways to comply with any previously applicable instructions and requirements; train personnel to be able to respond to the collection of information; search data sources; complete and review the collection of information; and, transmit or otherwise disclose the information. An agency may not conduct or sponsor, and a person is not required to respond to, a collection of information unless it displays a currently valid OMB control number. Send comments on the Agency's need for this information, the accuracy of the provided burden estimates, and any suggested methods for minimizing respondent burden, including the use of automated collection techniques to Director, Collection Strategies Division, U.S. Environmental Protection Agency (2822), 1200 Pennsylvania Ave., NW., Washington, D.C. 20460. Include the OMB control number in any correspondence. Do not send the completed forms to this address.

AS-BUILT COREHOLE MCC560

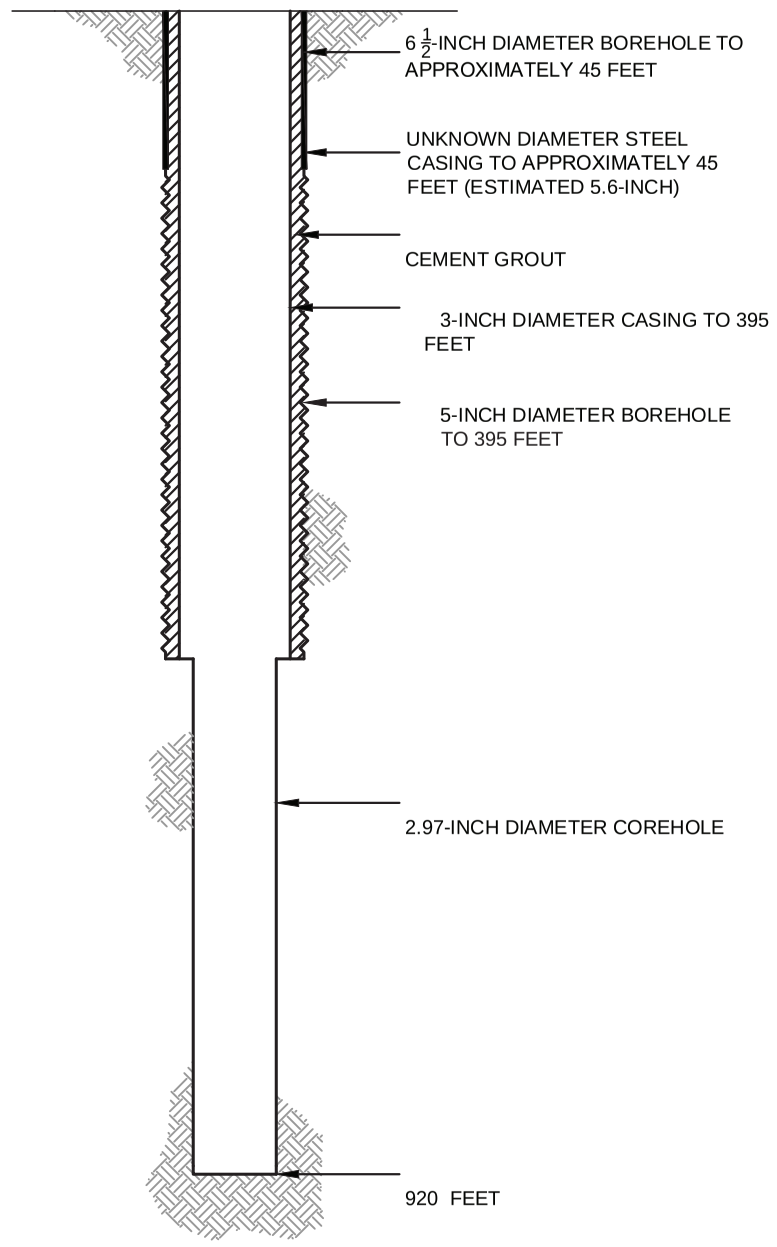

PROPOSED PLUGGING AND ABANDONMENT COREHOLE MCC560

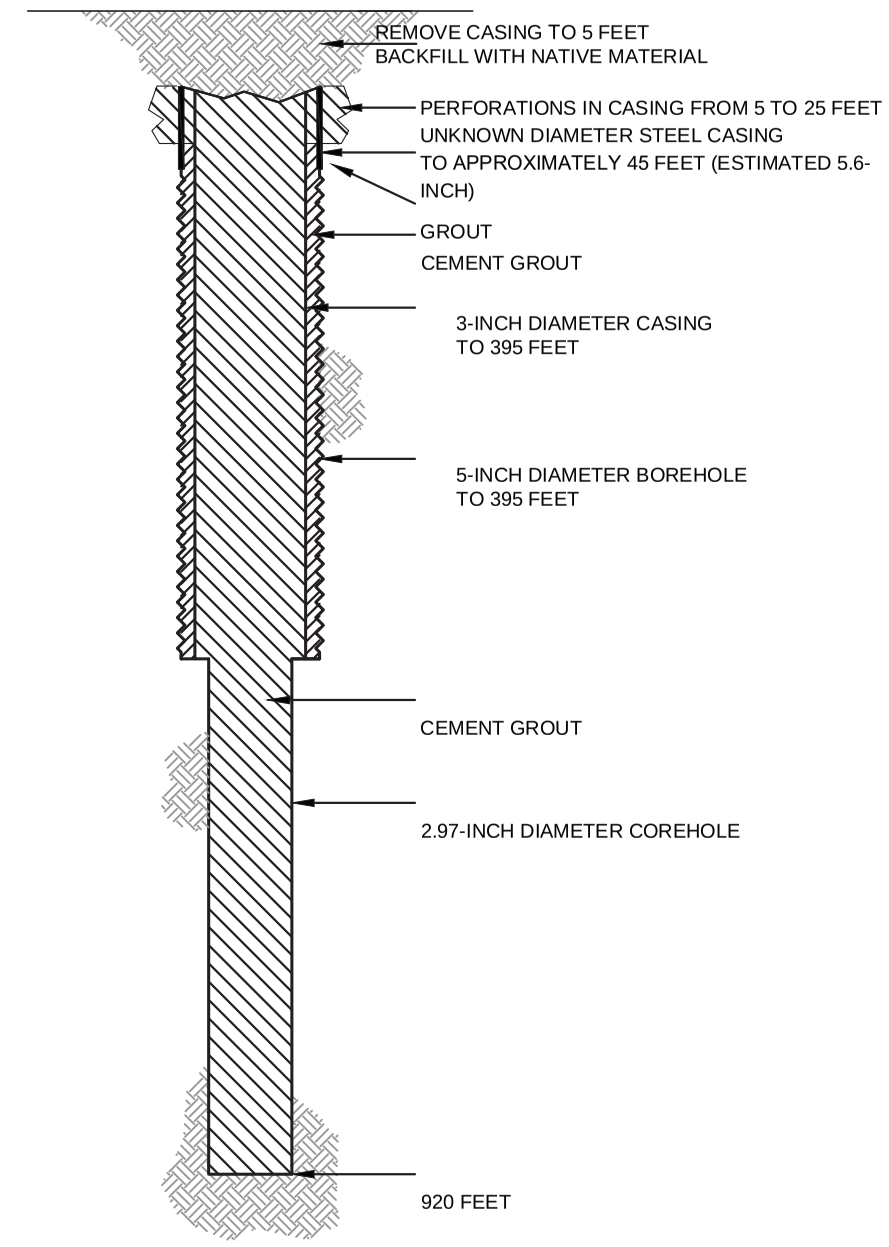

HALEY ALDRICH

FLORENCE COPPER, INC.
FLORENCE, ARIZONA

COREHOLE MCC560 DIAGRAM

FLORENCE COPPER INC.

NOT TO SCALE
SEPTEMBER 2019

FIGURE 1

MOBINI, GITA Printed: 4/21/2017 12:00 PM Layout: ABANDON (2)
\PROJECTS\CURIS RESOURCES\38706-CURIS FEASIBILITY\DRAWINGS\EPA\WELL ABANDON\415S_ABANDON.DWG

OMB No. 2040-0042 Approval Expires 4/30/2022

United States Environmental Protection Agency

WELL REWORK RECORD, PLUGGING AND ABANDONMENT PLAN, OR PLUGGING AND ABANDONMENT AFFIDAVIT

Name and Address, Phone Number and/or Email of Permittee

Florence Copper Project
1575 W Hunt Hwy,
Florence, AZ 85132

Permit or EPA ID Number	API Number	Full Well Name
R9UIC-AZ3-FY11-1		MCC564

State	County
Arizona	Pinal

Locate well in two directions from nearest lines of quarter section and drilling unit

Surface Location

NE 1/4 of NW 1/4 of Section 33 Township 4S Range 9E

Latitude 33.04441533

Longitude -111.4318345

_____ ft. from (N/S) _____ Line of quarter section

_____ ft. from (E/W) _____ Line of quarter section.

Well Class	Timing of Action (pick one)	Type of Action (pick one)
☐ Class I ☐ Class II ☑ Class III ☐ Class V	☑ Notice Prior to Work Date Expected to Commence March 2021 ☐ Report After Work Date Work Ended	☐ Well Rework ☑ Plugging and Abandonment ☐ Conversion to a Non-Injection Well

Provide a narrative description of the work planned to be performed, or that was performed. Use additional pages as necessary. See instructions.

A workover rig capable of performing the required abandonment operations at the required depths will be moved in and set up over the core hole. The core hole will be inspected to determine the depth to which the hole remains open and if any obstructions are present in the core hole; the presence and condition of any existing collar will also be documented. If necessary, the core hole will be cleaned out to a depth of at least 100 feet below the bedrock-LBFU contact to enable placement of cement seals.

If collar is present, an attempt will be made to remove it. If removal of the collar is not feasible, it will be left in the hole and perforated as needed to allow an annular seal to be placed to a depth of at least 25 feet bgs. In areas of agricultural use, the surface casing will be cut at least 5 feet bgs and removed.

If the collar cannot be removed, it will be perforated from at least 20 feet below the bedrock-LBFU contact to at least 20 feet above the contact; from at least 20 feet below the base of the MFGU to at least 20 feet above the top of the MFGU; and from at least 25 feet bgs to 5 feet bgs.

A tremie pipe will be used to place Type V cement in the open core hole from the bottom of the core hole to the top of the core hole. Cement retainers, as described above, will be used to force cement grout into the annulus and behind perforated intervals, as necessary.

If the hole has been obstructed, as much cement as possible will be placed from 100 feet below the LBFU-bedrock contact to the top of the core hole.

The volume of Type V cement will be recorded and will not be less than the estimated volume of material required to fill each interval. All cement grout will consist of Type V cement, or equivalent approved in accordance with the UIC Permit.

Certification

I certify under the penalty of law that I have personally examined and am familiar with the information submitted in this document and all attachments and that, based on my inquiry of those individuals immediately responsible for obtaining the information, I believe that the information is true, accurate, and complete. I am aware that there are significant penalties for submitting false information, including the possibliity of fine and imprisonment. (Ref. 40 CFR § 144.32)

Name and Official Title *(Please type or print)*	Signature	Date Signed
Dan Johnson, VP - General Manager		10/3/2019

INSTRUCTIONS FOR FORM 7520-19

This form replaces forms 7520-12 and 7520-14. Use this form only when work is planned or has occurred that affects the well's construction or operation as an injection well, including work on the casing, tubing or packer (or for shallow Class V wells, the subsurface fluid emplacement network). Use one form per injection well. While reports or other information developed by contractors or service companies may be attached, this form must be signed by a responsible entity as described at 40 CFR 144.32. Note: operators closing Class V wells should use Form 7520-17.

NAME, ADDRESS, PHONE AND/OR EMAIL OF PERMITTEE: Enter the name and street address, city/town, state, and ZIP code of the permittee. Also provide an email address (if available) and/or a phone number.

PERMIT OR EPA ID NUMBER: Enter the well identification number or permit number assigned to the well by the EPA or the permitting authority.

API NUMBER: Enter the number assigned by the local jurisdiction (usually a State Oil and Gas Agency) using the American Petroleum Institute standard numbering system.

FULL WELL NAME: Enter the full name of the well or project.

Enter the **STATE** and **COUNTY** where the well is located. For States that do not have counties, use the name of that State's equivalent jurisdiction at a more local level.

WELL LOCATION: Fill in the complete township, range, and section to the nearest quarter-quarter section. A township is north or south of the baseline, and a range is east or west of the principal meridian (e.g., T12N, R34W). Also include the distance, in feet, from the nearest north or south line and nearest east or west line of the quarter-section. Also, enter the **latitude** and **longitude** of the well in decimal degrees, to five or six places if possible; be sure to include a negative sign for the longitude of a well in the Western Hemisphere and a negative sign for the latitude of a well in the Southern Hemisphere.

Enter the **WELL CLASS,** i.e., the class of injection well as defined in 40 CFR 144.6.

TIMING OF THE ACTION: Check ***Notice prior to work*** if the activity has not yet occurred (i.e., is planned). Check ***Report after work*** if the activity described has already occurred. As appropriate, include the date the activity is expected to start or the date the activity was completed. (Note this may not be available, e.g., for a plugging plan submitted with a permit application.)

TYPE OF ACTION: Check the appropriate box to describe the kind of activity being reported. Check ***Well Rework*** for work that was/will be performed on the well after it has already been in operation as an injection well. Check ***Plugging and Abandonment*** to report on plans for or descriptions of final closure/plugging after use as an injection well. Check ***Conversion to a Non-Injection Well*** if the well is to be converted to something other than an injection well.

Provide a **NARRATIVE DESCRIPTION** of the work planned to be performed, or that was performed. The narrative should include a description of the main procedures planned or that occurred during the work activity. A service company report, daily report, or similar document may be attached if it includes all the requested information and is clear and legible.

For well reworks, include the following information: The reason for the well rework; depths of activity; type of activity; changes to injection well configuration, well casing, or cement behind casing; any plug added to the well and its depth; any newly drilled interval and its depth; method(s) to demonstrate that the well has mechanical integrity (as applicable); and any deviations from the approved rework plan (as applicable).

For a well plugging plan, include the following information: Reason for the well plugging; number of plugs placed, and their depths; materials used as plugs (e.g., cast iron bridge plug, cement, cement retainer); method to set plugs; and wait-on-cement times, if any. Also provide one or more cost estimates from an independent firm in the business of plugging and abandoning wells to plug the well as described in the plan.

For well plugging affidavit, include the following information: Reason for the well plugging; number of plugs placed, and their depths; materials used as plugs (e.g., cast iron bridge plug, cement, cement retainer); method to set plugs; wait-on-cement times, if any; and any deviations from the approved plugging plan (if applicable).

For conversion to a non-injection well, include the following information: Depths of activity; type of activity; changes to injection well configuration, well casing, or cement behind casing; any plug added to the well and its depth; any newly drilled interval and its depth; depths of new perforations; and method(s) to demonstrate that the well has mechanical integrity (as applicable).

For all of the above activities, include a well sketch depicting the work, results of well tests/logging performed, service company tickets, and any other available information demonstrating how the work was/is to be performed. Also, specify whether depths are below ground surface, relative to Kelly bushing, etc.

CERTIFICATION: This form must be signed and dated by either: a responsible corporate officer for a corporation, by a general partner for a partnership, by the proprietor of a sole proprietorship, or by a principal executive or ranking elected official for a public agency.

PAPERWORK REDUCTION ACT NOTICE: The public reporting and recordkeeping burden for this collection of information is estimated to average between 6.0 and 7.9 hours per response, depending on the injection well class. Burden means the total time, effort, or financial resource expended by persons to generate, maintain, retain, or disclose or provide information to or for a Federal Agency. This includes the time needed to review instructions; develop, acquire, install, and utilize technology and systems for the purposes of collecting, validating, and verifying information, processing and maintaining information, and disclosing and providing information; adjust the existing ways to comply with any previously applicable instructions and requirements; train personnel to be able to respond to the collection of information; search data sources; complete and review the collection of information; and, transmit or otherwise disclose the information. An agency may not conduct or sponsor, and a person is not required to respond to, a collection of information unless it displays a currently valid OMB control number. Send comments on the Agency's need for this information, the accuracy of the provided burden estimates, and any suggested methods for minimizing respondent burden, including the use of automated collection techniques to Director, Collection Strategies Division, U.S. Environmental Protection Agency (2822), 1200 Pennsylvania Ave., NW., Washington, D.C. 20460. Include the OMB control number in any correspondence. Do not send the completed forms to this address.

AS-BUILT COREHOLE MCC564

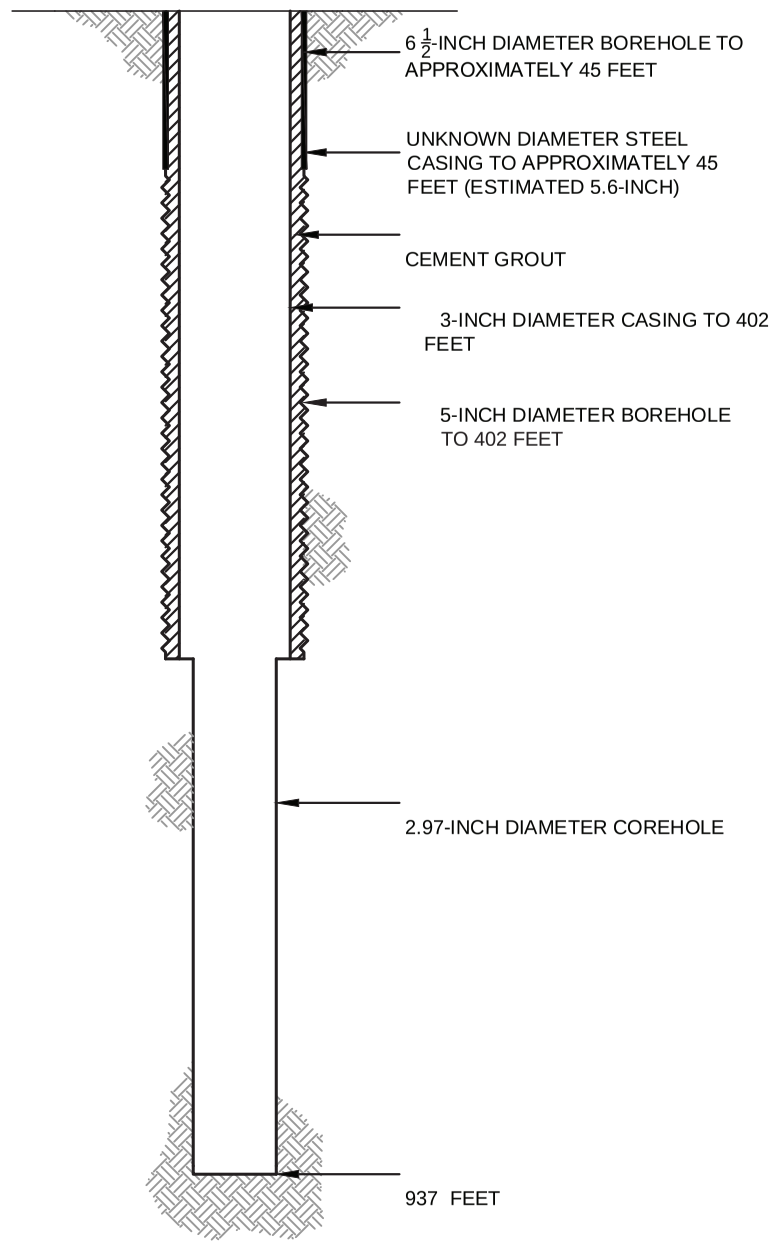

PROPOSED PLUGGING AND ABANDONMENT COREHOLE MCC564

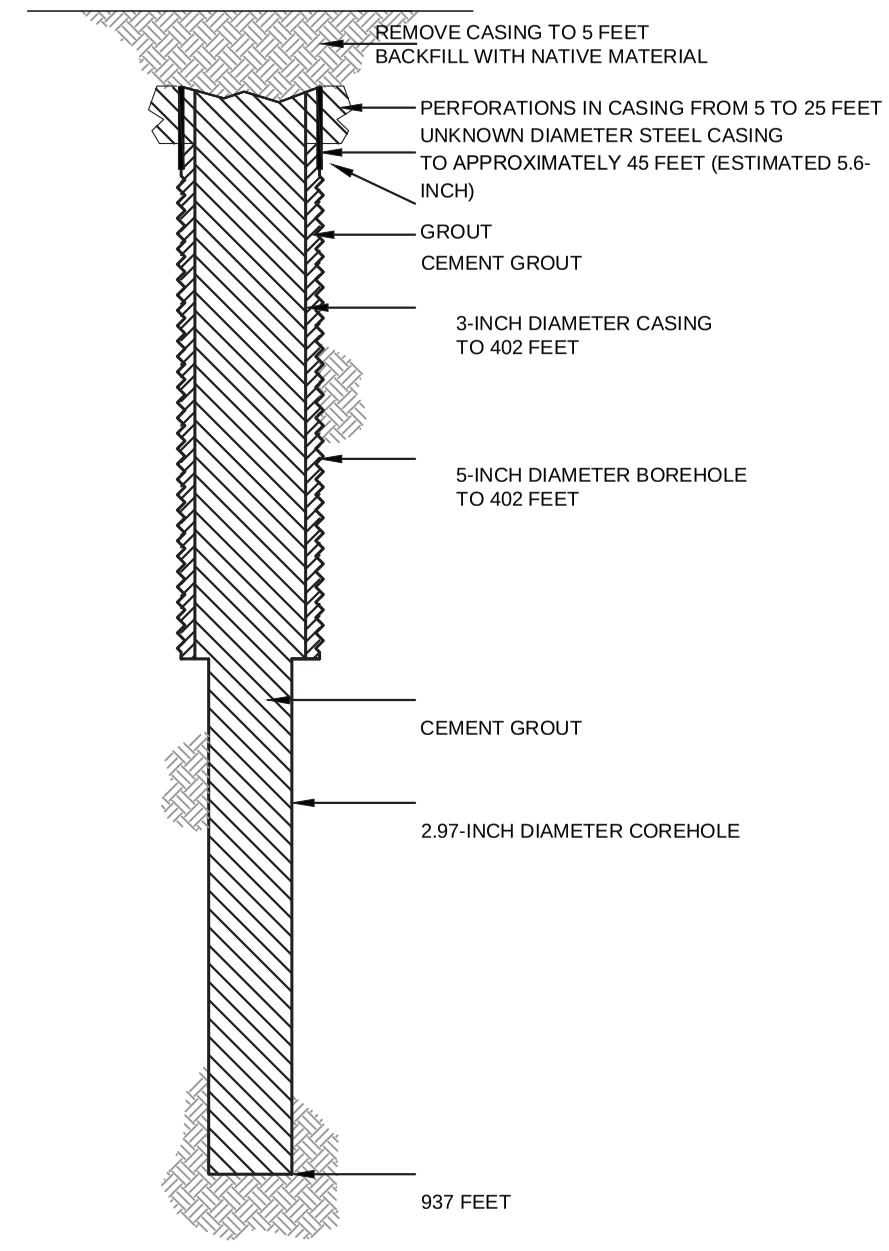

HALEY ALDRICH

FLORENCE COPPER, INC.
FLORENCE, ARIZONA

COREHOLE MCC564 DIAGRAM

FLORENCE COPPER INC.

NOT TO SCALE
SEPTEMBER 2019

FIGURE 1

MOBINI, GITA Printed: 4/21/2017 12:00 PM Layout: ABANDON (2)
\PROJECTS\CURIS RESOURCES38706-CURIS FEASIBILITY\DRAWINGS\EPA\WELL ABANDON\415S_ABANDON.DWG

OMB No. 2040-0042 Approval Expires 4/30/2022

United States Environmental Protection Agency

WELL REWORK RECORD, PLUGGING AND ABANDONMENT PLAN, OR PLUGGING AND ABANDONMENT AFFIDAVIT

Name and Address, Phone Number and/or Email of Permittee

Florence Copper Project
1575 W Hunt Hwy,
Florence, AZ 85132

Permit or EPA ID Number	API Number	Full Well Name
R9UIC-AZ3-FY11-1		MCC565

State	County
Arizona	Pinal

Locate well in two directions from nearest lines of quarter section and drilling unit

Surface Location

NW 1/4 of NW 1/4 of Section 33 Township 4S Range 9E

Latitude 33.04558817

Longitude -111.4347449

_____ ft. from (N/S) _____ Line of quarter section

_____ ft. from (E/W) _____ Line of quarter section.

Well Class	Timing of Action (pick one)	Type of Action (pick one)
☐ Class I ☐ Class II ☑ Class III ☐ Class V	☑ Notice Prior to Work Date Expected to Commence March 2021 ☐ Report After Work Date Work Ended	☐ Well Rework ☑ Plugging and Abandonment ☐ Conversion to a Non-Injection Well

Provide a narrative description of the work planned to be performed, or that was performed. Use additional pages as necessary. See instructions.

A workover rig capable of performing the required abandonment operations at the required depths will be moved in and set up over the core hole. The core hole will be inspected to determine the depth to which the hole remains open and if any obstructions are present in the core hole; the presence and condition of any existing collar will also be documented. If necessary, the core hole will be cleaned out to a depth of at least 100 feet below the bedrock-LBFU contact to enable placement of cement seals.

If collar is present, an attempt will be made to remove it. If removal of the collar is not feasible, it will be left in the hole and perforated as needed to allow an annular seal to be placed to a depth of at least 25 feet bgs. In areas of agricultural use, the surface casing will be cut at least 5 feet bgs and removed.

If the collar cannot be removed, it will be perforated from at least 20 feet below the bedrock-LBFU contact to at least 20 feet above the contact; from at least 20 feet below the base of the MFGU to at least 20 feet above the top of the MFGU; and from at least 25 feet bgs to 5 feet bgs.

A tremie pipe will be used to place Type V cement in the open core hole from the bottom of the core hole to the top of the core hole. Cement retainers, as described above, will be used to force cement grout into the annulus and behind perforated intervals, as necessary.

If the hole has been obstructed, as much cement as possible will be placed from 100 feet below the LBFU-bedrock contact to the top of the core hole.

The volume of Type V cement will be recorded and will not be less than the estimated volume of material required to fill each interval. All cement grout will consist of Type V cement, or equivalent approved in accordance with the UIC Permit.

Certification

I certify under the penalty of law that I have personally examined and am familiar with the information submitted in this document and all attachments and that, based on my inquiry of those individuals immediately responsible for obtaining the information, I believe that the information is true, accurate, and complete. I am aware that there are significant penalties for submitting false information, including the possibliity of fine and imprisonment. (Ref. 40 CFR § 144.32)

Name and Official Title *(Please type or print)*	Signature	Date Signed
Dan Johnson, VP - General Manager		10/3/2019

INSTRUCTIONS FOR FORM 7520-19

This form replaces forms 7520-12 and 7520-14. Use this form only when work is planned or has occurred that affects the well's construction or operation as an injection well, including work on the casing, tubing or packer (or for shallow Class V wells, the subsurface fluid emplacement network). Use one form per injection well. While reports or other information developed by contractors or service companies may be attached, this form must be signed by a responsible entity as described at 40 CFR 144.32. Note: operators closing Class V wells should use Form 7520-17.

NAME, ADDRESS, PHONE AND/OR EMAIL OF PERMITTEE: Enter the name and street address, city/town, state, and ZIP code of the permittee. Also provide an email address (if available) and/or a phone number.

PERMIT OR EPA ID NUMBER: Enter the well identification number or permit number assigned to the well by the EPA or the permitting authority.

API NUMBER: Enter the number assigned by the local jurisdiction (usually a State Oil and Gas Agency) using the American Petroleum Institute standard numbering system.

FULL WELL NAME: Enter the full name of the well or project.

Enter the **STATE** and **COUNTY** where the well is located. For States that do not have counties, use the name of that State's equivalent jurisdiction at a more local level.

WELL LOCATION: Fill in the complete township, range, and section to the nearest quarter-quarter section. A township is north or south of the baseline, and a range is east or west of the principal meridian (e.g., T12N, R34W). Also include the distance, in feet, from the nearest north or south line and nearest east or west line of the quarter-section. Also, enter the **latitude** and **longitude** of the well in decimal degrees, to five or six places if possible; be sure to include a negative sign for the longitude of a well in the Western Hemisphere and a negative sign for the latitude of a well in the Southern Hemisphere.

Enter the **WELL CLASS,** i.e., the class of injection well as defined in 40 CFR 144.6.

TIMING OF THE ACTION: Check ***Notice prior to work*** if the activity has not yet occurred (i.e., is planned). Check ***Report after work*** if the activity described has already occurred. As appropriate, include the date the activity is expected to start or the date the activity was completed. (Note this may not be available, e.g., for a plugging plan submitted with a permit application.)

TYPE OF ACTION: Check the appropriate box to describe the kind of activity being reported. Check ***Well Rework*** for work that was/will be performed on the well after it has already been in operation as an injection well. Check ***Plugging and Abandonment*** to report on plans for or descriptions of final closure/plugging after use as an injection well. Check ***Conversion to a Non-Injection Well*** if the well is to be converted to something other than an injection well.

Provide a **NARRATIVE DESCRIPTION** of the work planned to be performed, or that was performed. The narrative should include a description of the main procedures planned or that occurred during the work activity. A service company report, daily report, or similar document may be attached if it includes all the requested information and is clear and legible.

For well reworks, include the following information: The reason for the well rework; depths of activity; type of activity; changes to injection well configuration, well casing, or cement behind casing; any plug added to the well and its depth; any newly drilled interval and its depth; method(s) to demonstrate that the well has mechanical integrity (as applicable); and any deviations from the approved rework plan (as applicable).

For a well plugging plan, include the following information: Reason for the well plugging; number of plugs placed, and their depths; materials used as plugs (e.g., cast iron bridge plug, cement, cement retainer); method to set plugs; and wait-on-cement times, if any. Also provide one or more cost estimates from an independent firm in the business of plugging and abandoning wells to plug the well as described in the plan.

For well plugging affidavit, include the following information: Reason for the well plugging; number of plugs placed, and their depths; materials used as plugs (e.g., cast iron bridge plug, cement, cement retainer); method to set plugs; wait-on-cement times, if any; and any deviations from the approved plugging plan (if applicable).

For conversion to a non-injection well, include the following information: Depths of activity; type of activity; changes to injection well configuration, well casing, or cement behind casing; any plug added to the well and its depth; any newly drilled interval and its depth; depths of new perforations; and method(s) to demonstrate that the well has mechanical integrity (as applicable).

For all of the above activities, include a well sketch depicting the work, results of well tests/logging performed, service company tickets, and any other available information demonstrating how the work was/is to be performed. Also, specify whether depths are below ground surface, relative to Kelly bushing, etc.

CERTIFICATION: This form must be signed and dated by either: a responsible corporate officer for a corporation, by a general partner for a partnership, by the proprietor of a sole proprietorship, or by a principal executive or ranking elected official for a public agency.

PAPERWORK REDUCTION ACT NOTICE: The public reporting and recordkeeping burden for this collection of information is estimated to average between 6.0 and 7.9 hours per response, depending on the injection well class. Burden means the total time, effort, or financial resource expended by persons to generate, maintain, retain, or disclose or provide information to or for a Federal Agency. This includes the time needed to review instructions; develop, acquire, install, and utilize technology and systems for the purposes of collecting, validating, and verifying information, processing and maintaining information, and disclosing and providing information; adjust the existing ways to comply with any previously applicable instructions and requirements; train personnel to be able to respond to the collection of information; search data sources; complete and review the collection of information; and, transmit or otherwise disclose the information. An agency may not conduct or sponsor, and a person is not required to respond to, a collection of information unless it displays a currently valid OMB control number. Send comments on the Agency's need for this information, the accuracy of the provided burden estimates, and any suggested methods for minimizing respondent burden, including the use of automated collection techniques to Director, Collection Strategies Division, U.S. Environmental Protection Agency (2822), 1200 Pennsylvania Ave., NW., Washington, D.C. 20460. Include the OMB control number in any correspondence. Do not send the completed forms to this address.

AS-BUILT COREHOLE MCC565

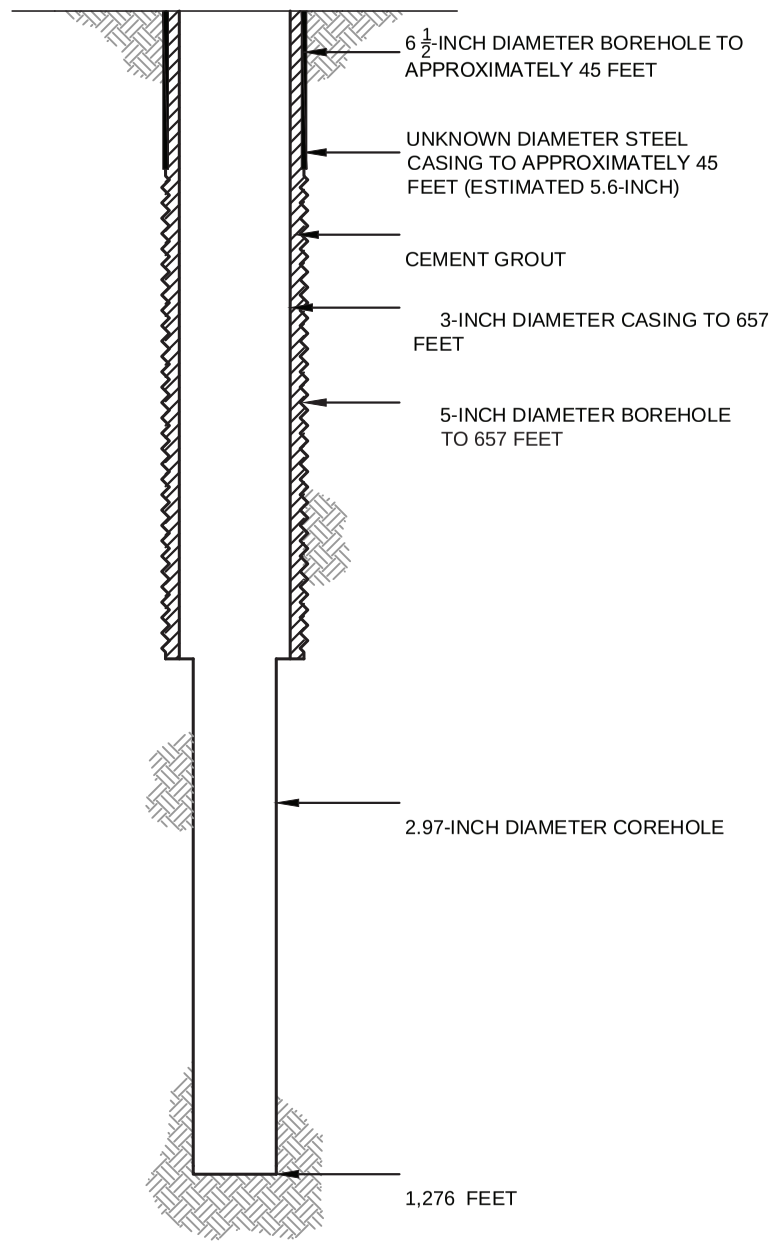

PROPOSED PLUGGING AND ABANDONMENT COREHOLE MCC565

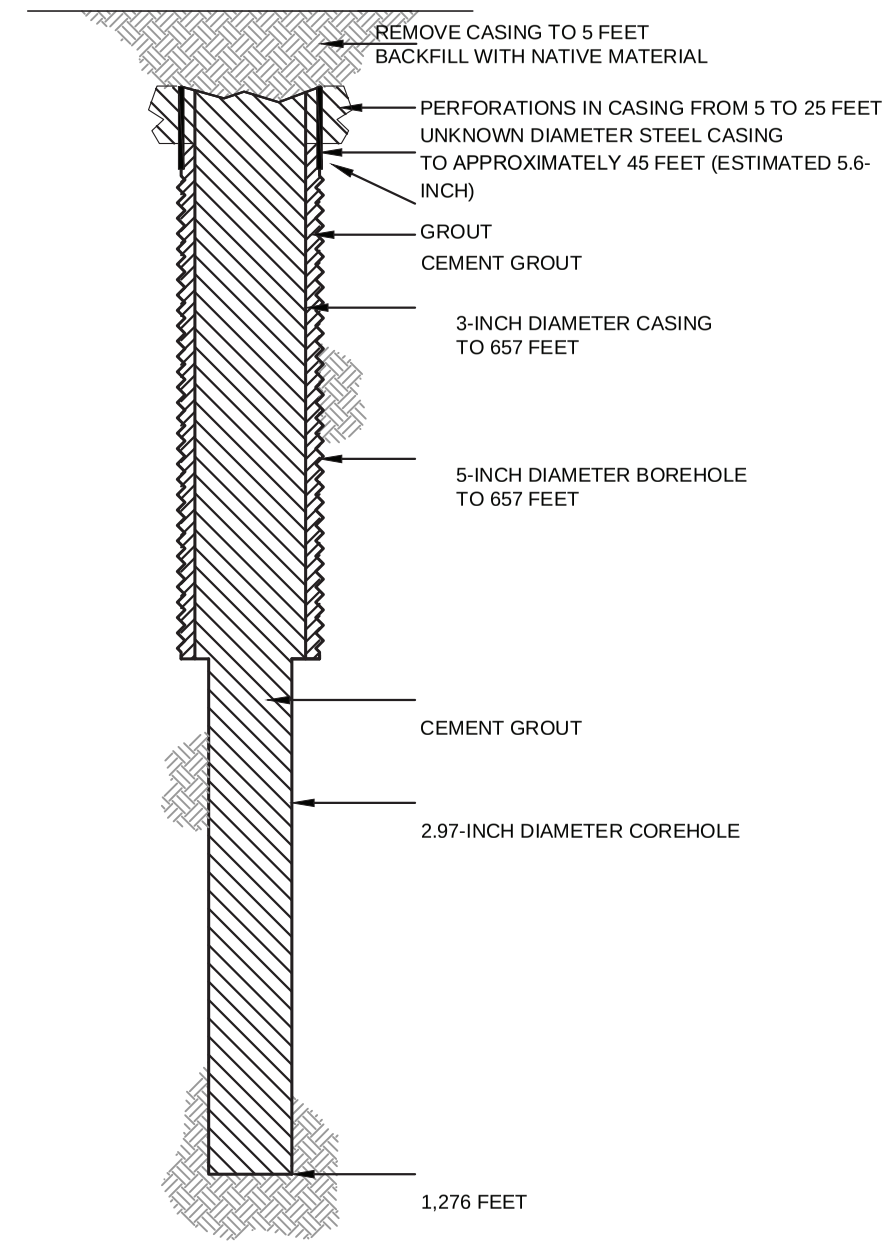

HALEY ALDRICH

FLORENCE COPPER, INC.
FLORENCE, ARIZONA

COREHOLE MCC565 DIAGRAM

FLORENCE COPPER INC.

NOT TO SCALE
SEPTEMBER 2019

FIGURE 1

MOBINI, GITA Printed: 4/21/2017 12:00 PM Layout: ABANDON (2)
\PROJECTS\CURIS RESOURCES38706-CURIS FEASIBILITY\DRAWINGS\EPA\WELL ABANDON\415S_ABANDON.DWG

OMB No. 2040-0042 Approval Expires 4/30/2022

United States Environmental Protection Agency

WELL REWORK RECORD, PLUGGING AND ABANDONMENT PLAN, OR PLUGGING AND ABANDONMENT AFFIDAVIT

Name and Address, Phone Number and/or Email of Permittee

Florence Copper Project
1575 W Hunt Hwy,
Florence, AZ 85132

Permit or EPA ID Number	API Number	Full Well Name
R9UIC-AZ3-FY11-1		MCC566

State	County
Arizona	Pinal

Locate well in two directions from nearest lines of quarter section and drilling unit

Latitude 33.04441302

Surface Location

NE **1/4 of** NW **1/4 of Section** 33 **Township** 4S **Range** 9E

Longitude -111.4310281

_____ **ft. from (N/S)** _____ **Line of quarter section**

_____ **ft. from (E/W)** _____ **Line of quarter section.**

Well Class	Timing of Action (pick one)	Type of Action (pick one)
☐ Class I ☐ Class II ☑ Class III ☐ Class V	☑ Notice Prior to Work Date Expected to Commence March 2021 ☐ Report After Work Date Work Ended	☐ Well Rework ☑ Plugging and Abandonment ☐ Conversion to a Non-Injection Well

Provide a narrative description of the work planned to be performed, or that was performed. Use additional pages as necessary. See instructions.

A workover rig capable of performing the required abandonment operations at the required depths will be moved in and set up over the core hole. The core hole will be inspected to determine the depth to which the hole remains open and if any obstructions are present in the core hole; the presence and condition of any existing collar will also be documented. If necessary, the core hole will be cleaned out to a depth of at least 100 feet below the bedrock-LBFU contact to enable placement of cement seals.

If collar is present, an attempt will be made to remove it. If removal of the collar is not feasible, it will be left in the hole and perforated as needed to allow an annular seal to be placed to a depth of at least 25 feet bgs. In areas of agricultural use, the surface casing will be cut at least 5 feet bgs and removed.

If the collar cannot be removed, it will be perforated from at least 20 feet below the bedrock-LBFU contact to at least 20 feet above the contact; from at least 20 feet below the base of the MFGU to at least 20 feet above the top of the MFGU; and from at least 25 feet bgs to 5 feet bgs.

A tremie pipe will be used to place Type V cement in the open core hole from the bottom of the core hole to the top of the core hole. Cement retainers, as described above, will be used to force cement grout into the annulus and behind perforated intervals, as necessary.

If the hole has been obstructed, as much cement as possible will be placed from 100 feet below the LBFU-bedrock contact to the top of the core hole.

The volume of Type V cement will be recorded and will not be less than the estimated volume of material required to fill each interval. All cement grout will consist of Type V cement, or equivalent approved in accordance with the UIC Permit.

Certification

I certify under the penalty of law that I have personally examined and am familiar with the information submitted in this document and all attachments and that, based on my inquiry of those individuals immediately responsible for obtaining the information, I believe that the information is true, accurate, and complete. I am aware that there are significant penalties for submitting false information, including the possibliity of fine and imprisonment. (Ref. 40 CFR § 144.32)

Name and Official Title *(Please type or print)*	Signature	Date Signed
Dan Johnson, VP - General Manager		10/3/2019

INSTRUCTIONS FOR FORM 7520-19

This form replaces forms 7520-12 and 7520-14. Use this form only when work is planned or has occurred that affects the well's construction or operation as an injection well, including work on the casing, tubing or packer (or for shallow Class V wells, the subsurface fluid emplacement network). Use one form per injection well. While reports or other information developed by contractors or service companies may be attached, this form must be signed by a responsible entity as described at 40 CFR 144.32. Note: operators closing Class V wells should use Form 7520-17.

NAME, ADDRESS, PHONE AND/OR EMAIL OF PERMITTEE: Enter the name and street address, city/town, state, and ZIP code of the permittee. Also provide an email address (if available) and/or a phone number.

PERMIT OR EPA ID NUMBER: Enter the well identification number or permit number assigned to the well by the EPA or the permitting authority.

API NUMBER: Enter the number assigned by the local jurisdiction (usually a State Oil and Gas Agency) using the American Petroleum Institute standard numbering system.

FULL WELL NAME: Enter the full name of the well or project.

Enter the **STATE** and **COUNTY** where the well is located. For States that do not have counties, use the name of that State's equivalent jurisdiction at a more local level.

WELL LOCATION: Fill in the complete township, range, and section to the nearest quarter-quarter section. A township is north or south of the baseline, and a range is east or west of the principal meridian (e.g., T12N, R34W). Also include the distance, in feet, from the nearest north or south line and nearest east or west line of the quarter-section. Also, enter the **latitude** and **longitude** of the well in decimal degrees, to five or six places if possible; be sure to include a negative sign for the longitude of a well in the Western Hemisphere and a negative sign for the latitude of a well in the Southern Hemisphere.

Enter the **WELL CLASS,** i.e., the class of injection well as defined in 40 CFR 144.6.

TIMING OF THE ACTION: Check ***Notice prior to work*** if the activity has not yet occurred (i.e., is planned). Check ***Report after work*** if the activity described has already occurred. As appropriate, include the date the activity is expected to start or the date the activity was completed. (Note this may not be available, e.g., for a plugging plan submitted with a permit application.)

TYPE OF ACTION: Check the appropriate box to describe the kind of activity being reported. Check ***Well Rework*** for work that was/will be performed on the well after it has already been in operation as an injection well. Check ***Plugging and Abandonment*** to report on plans for or descriptions of final closure/plugging after use as an injection well. Check ***Conversion to a Non-Injection Well*** if the well is to be converted to something other than an injection well.

Provide a **NARRATIVE DESCRIPTION** of the work planned to be performed, or that was performed. The narrative should include a description of the main procedures planned or that occurred during the work activity. A service company report, daily report, or similar document may be attached if it includes all the requested information and is clear and legible.

For well reworks, include the following information: The reason for the well rework; depths of activity; type of activity; changes to injection well configuration, well casing, or cement behind casing; any plug added to the well and its depth; any newly drilled interval and its depth; method(s) to demonstrate that the well has mechanical integrity (as applicable); and any deviations from the approved rework plan (as applicable).

For a well plugging plan, include the following information: Reason for the well plugging; number of plugs placed, and their depths; materials used as plugs (e.g., cast iron bridge plug, cement, cement retainer); method to set plugs; and wait-on-cement times, if any. Also provide one or more cost estimates from an independent firm in the business of plugging and abandoning wells to plug the well as described in the plan.

For well plugging affidavit, include the following information: Reason for the well plugging; number of plugs placed, and their depths; materials used as plugs (e.g., cast iron bridge plug, cement, cement retainer); method to set plugs; wait-on-cement times, if any; and any deviations from the approved plugging plan (if applicable).

For conversion to a non-injection well, include the following information: Depths of activity; type of activity; changes to injection well configuration, well casing, or cement behind casing; any plug added to the well and its depth; any newly drilled interval and its depth; depths of new perforations; and method(s) to demonstrate that the well has mechanical integrity (as applicable).

For all of the above activities, include a well sketch depicting the work, results of well tests/logging performed, service company tickets, and any other available information demonstrating how the work was/is to be performed. Also, specify whether depths are below ground surface, relative to Kelly bushing, etc.

CERTIFICATION: This form must be signed and dated by either: a responsible corporate officer for a corporation, by a general partner for a partnership, by the proprietor of a sole proprietorship, or by a principal executive or ranking elected official for a public agency.

PAPERWORK REDUCTION ACT NOTICE: The public reporting and recordkeeping burden for this collection of information is estimated to average between 6.0 and 7.9 hours per response, depending on the injection well class. Burden means the total time, effort, or financial resource expended by persons to generate, maintain, retain, or disclose or provide information to or for a Federal Agency. This includes the time needed to review instructions; develop, acquire, install, and utilize technology and systems for the purposes of collecting, validating, and verifying information, processing and maintaining information, and disclosing and providing information; adjust the existing ways to comply with any previously applicable instructions and requirements; train personnel to be able to respond to the collection of information; search data sources; complete and review the collection of information; and, transmit or otherwise disclose the information. An agency may not conduct or sponsor, and a person is not required to respond to, a collection of information unless it displays a currently valid OMB control number. Send comments on the Agency's need for this information, the accuracy of the provided burden estimates, and any suggested methods for minimizing respondent burden, including the use of automated collection techniques to Director, Collection Strategies Division, U.S. Environmental Protection Agency (2822), 1200 Pennsylvania Ave., NW., Washington, D.C. 20460. Include the OMB control number in any correspondence. Do not send the completed forms to this address.

AS-BUILT COREHOLE MCC566

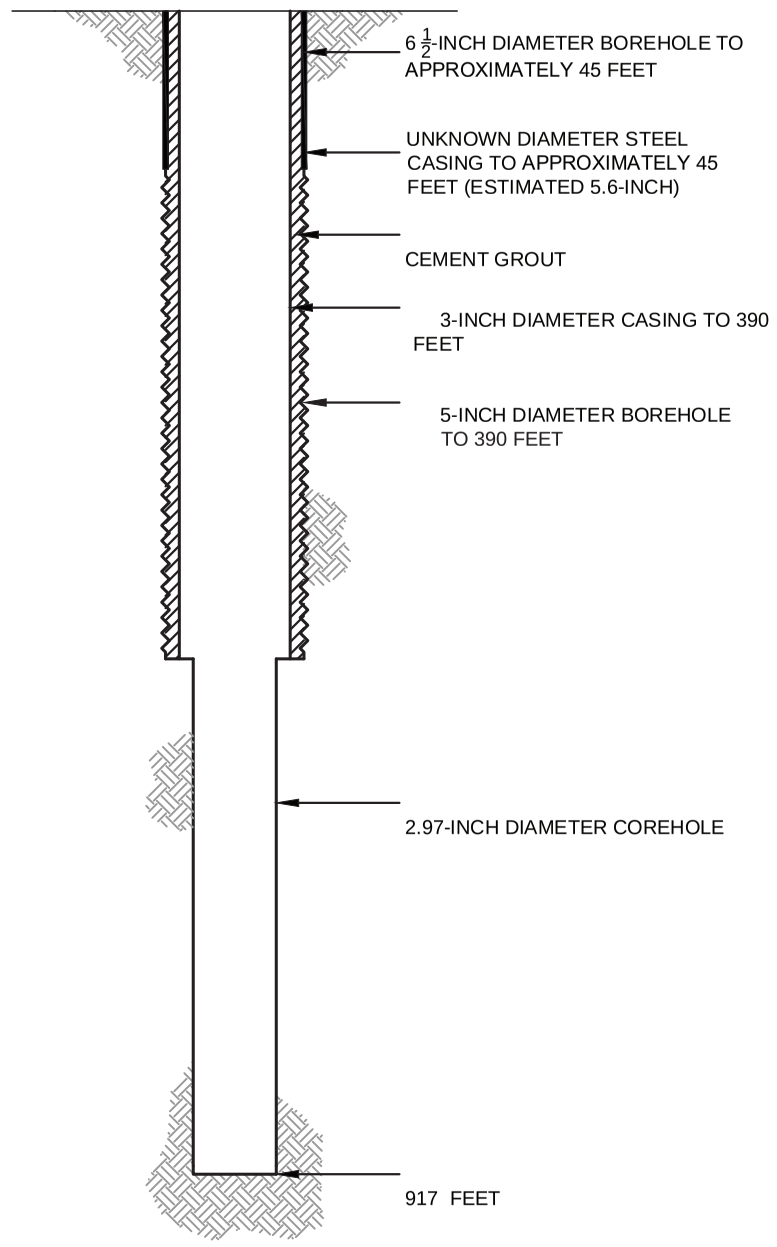

PROPOSED PLUGGING AND ABANDONMENT COREHOLE MCC566

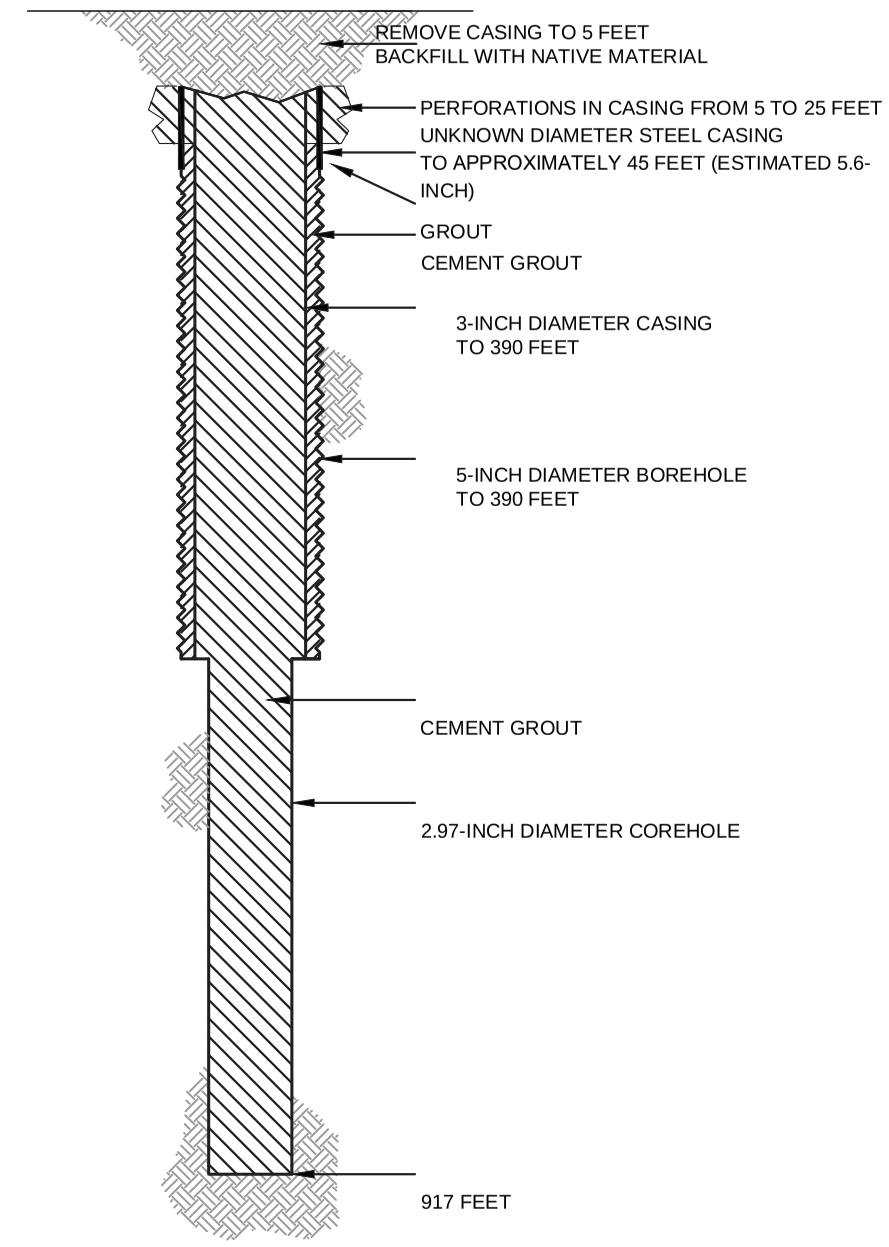

HALEY ALDRICH

FLORENCE COPPER, INC.
FLORENCE, ARIZONA

COREHOLE MCC566 DIAGRAM

FLORENCE COPPER INC.

NOT TO SCALE
SEPTEMBER 2019

FIGURE 1

MOBINI, GITA Printed: 4/21/2017 12:00 PM Layout: ABANDON (2)
\PROJECTS\CURIS RESOURCES38706-CURIS FEASIBILITY\DRAWINGS\EPA\WELL ABANDON\415S_ABANDON.DWG

OMB No. 2040-0042 Approval Expires 4/30/2022

United States Environmental Protection Agency

WELL REWORK RECORD, PLUGGING AND ABANDONMENT PLAN, OR PLUGGING AND ABANDONMENT AFFIDAVIT

Name and Address, Phone Number and/or Email of Permittee

Florence Copper Project
1575 W Hunt Hwy,
Florence, AZ 85132

Permit or EPA ID Number	API Number	Full Well Name
R9UIC-AZ3-FY11-1		MCC567

State	County
Arizona	Pinal

Locate well in two directions from nearest lines of quarter section and drilling unit

Latitude 33.04384373

Surface Location

NE **1/4 of** NW **1/4 of Section** 33 **Township** 4S **Range** 9E

Longitude -111.4322171

_____ **ft. from (N/S)** _____ **Line of quarter section**

_____ **ft. from (E/W)** _____ **Line of quarter section.**

Well Class	Timing of Action (pick one)	Type of Action (pick one)
☐ Class I ☐ Class II ☑ Class III ☐ Class V	☑ Notice Prior to Work Date Expected to Commence March 2021 ☐ Report After Work Date Work Ended	☐ Well Rework ☑ Plugging and Abandonment ☐ Conversion to a Non-Injection Well

Provide a narrative description of the work planned to be performed, or that was performed. Use additional pages as necessary. See instructions.

A workover rig capable of performing the required abandonment operations at the required depths will be moved in and set up over the core hole. The core hole will be inspected to determine the depth to which the hole remains open and if any obstructions are present in the core hole; the presence and condition of any existing collar will also be documented. If necessary, the core hole will be cleaned out to a depth of at least 100 feet below the bedrock-LBFU contact to enable placement of cement seals.

If collar is present, an attempt will be made to remove it. If removal of the collar is not feasible, it will be left in the hole and perforated as needed to allow an annular seal to be placed to a depth of at least 25 feet bgs. In areas of agricultural use, the surface casing will be cut at least 5 feet bgs and removed.

If the collar cannot be removed, it will be perforated from at least 20 feet below the bedrock-LBFU contact to at least 20 feet above the contact; from at least 20 feet below the base of the MFGU to at least 20 feet above the top of the MFGU; and from at least 25 feet bgs to 5 feet bgs.

A tremie pipe will be used to place Type V cement in the open core hole from the bottom of the core hole to the top of the core hole. Cement retainers, as described above, will be used to force cement grout into the annulus and behind perforated intervals, as necessary.

If the hole has been obstructed, as much cement as possible will be placed from 100 feet below the LBFU-bedrock contact to the top of the core hole.

The volume of Type V cement will be recorded and will not be less than the estimated volume of material required to fill each interval. All cement grout will consist of Type V cement, or equivalent approved in accordance with the UIC Permit.

Certification

I certify under the penalty of law that I have personally examined and am familiar with the information submitted in this document and all attachments and that, based on my inquiry of those individuals immediately responsible for obtaining the information, I believe that the information is true, accurate, and complete. I am aware that there are significant penalties for submitting false information, including the possibliity of fine and imprisonment. (Ref. 40 CFR § 144.32)

Name and Official Title *(Please type or print)*	Signature	Date Signed
Dan Johnson, VP - General Manager		10/3/2019

INSTRUCTIONS FOR FORM 7520-19

This form replaces forms 7520-12 and 7520-14. Use this form only when work is planned or has occurred that affects the well's construction or operation as an injection well, including work on the casing, tubing or packer (or for shallow Class V wells, the subsurface fluid emplacement network). Use one form per injection well. While reports or other information developed by contractors or service companies may be attached, this form must be signed by a responsible entity as described at 40 CFR 144.32. Note: operators closing Class V wells should use Form 7520-17.

NAME, ADDRESS, PHONE AND/OR EMAIL OF PERMITTEE: Enter the name and street address, city/town, state, and ZIP code of the permittee. Also provide an email address (if available) and/or a phone number.

PERMIT OR EPA ID NUMBER: Enter the well identification number or permit number assigned to the well by the EPA or the permitting authority.

API NUMBER: Enter the number assigned by the local jurisdiction (usually a State Oil and Gas Agency) using the American Petroleum Institute standard numbering system.

FULL WELL NAME: Enter the full name of the well or project.

Enter the **STATE** and **COUNTY** where the well is located. For States that do not have counties, use the name of that State's equivalent jurisdiction at a more local level.

WELL LOCATION: Fill in the complete township, range, and section to the nearest quarter-quarter section. A township is north or south of the baseline, and a range is east or west of the principal meridian (e.g., T12N, R34W). Also include the distance, in feet, from the nearest north or south line and nearest east or west line of the quarter-section. Also, enter the **latitude** and **longitude** of the well in decimal degrees, to five or six places if possible; be sure to include a negative sign for the longitude of a well in the Western Hemisphere and a negative sign for the latitude of a well in the Southern Hemisphere.

Enter the **WELL CLASS,** i.e., the class of injection well as defined in 40 CFR 144.6.

TIMING OF THE ACTION: Check ***Notice prior to work*** if the activity has not yet occurred (i.e., is planned). Check ***Report after work*** if the activity described has already occurred. As appropriate, include the date the activity is expected to start or the date the activity was completed. (Note this may not be available, e.g., for a plugging plan submitted with a permit application.)

TYPE OF ACTION: Check the appropriate box to describe the kind of activity being reported. Check ***Well Rework*** for work that was/will be performed on the well after it has already been in operation as an injection well. Check ***Plugging and Abandonment*** to report on plans for or descriptions of final closure/plugging after use as an injection well. Check ***Conversion to a Non-Injection Well*** if the well is to be converted to something other than an injection well.

Provide a **NARRATIVE DESCRIPTION** of the work planned to be performed, or that was performed. The narrative should include a description of the main procedures planned or that occurred during the work activity. A service company report, daily report, or similar document may be attached if it includes all the requested information and is clear and legible.

For well reworks, include the following information: The reason for the well rework; depths of activity; type of activity; changes to injection well configuration, well casing, or cement behind casing; any plug added to the well and its depth; any newly drilled interval and its depth; method(s) to demonstrate that the well has mechanical integrity (as applicable); and any deviations from the approved rework plan (as applicable).

For a well plugging plan, include the following information: Reason for the well plugging; number of plugs placed, and their depths; materials used as plugs (e.g., cast iron bridge plug, cement, cement retainer); method to set plugs; and wait-on-cement times, if any. Also provide one or more cost estimates from an independent firm in the business of plugging and abandoning wells to plug the well as described in the plan.

For well plugging affidavit, include the following information: Reason for the well plugging; number of plugs placed, and their depths; materials used as plugs (e.g., cast iron bridge plug, cement, cement retainer); method to set plugs; wait-on-cement times, if any; and any deviations from the approved plugging plan (if applicable).

For conversion to a non-injection well, include the following information: Depths of activity; type of activity; changes to injection well configuration, well casing, or cement behind casing; any plug added to the well and its depth; any newly drilled interval and its depth; depths of new perforations; and method(s) to demonstrate that the well has mechanical integrity (as applicable).

For all of the above activities, include a well sketch depicting the work, results of well tests/logging performed, service company tickets, and any other available information demonstrating how the work was/is to be performed. Also, specify whether depths are below ground surface, relative to Kelly bushing, etc.

CERTIFICATION: This form must be signed and dated by either: a responsible corporate officer for a corporation, by a general partner for a partnership, by the proprietor of a sole proprietorship, or by a principal executive or ranking elected official for a public agency.

PAPERWORK REDUCTION ACT NOTICE: The public reporting and recordkeeping burden for this collection of information is estimated to average between 6.0 and 7.9 hours per response, depending on the injection well class. Burden means the total time, effort, or financial resource expended by persons to generate, maintain, retain, or disclose or provide information to or for a Federal Agency. This includes the time needed to review instructions; develop, acquire, install, and utilize technology and systems for the purposes of collecting, validating, and verifying information, processing and maintaining information, and disclosing and providing information; adjust the existing ways to comply with any previously applicable instructions and requirements; train personnel to be able to respond to the collection of information; search data sources; complete and review the collection of information; and, transmit or otherwise disclose the information. An agency may not conduct or sponsor, and a person is not required to respond to, a collection of information unless it displays a currently valid OMB control number. Send comments on the Agency's need for this information, the accuracy of the provided burden estimates, and any suggested methods for minimizing respondent burden, including the use of automated collection techniques to Director, Collection Strategies Division, U.S. Environmental Protection Agency (2822), 1200 Pennsylvania Ave., NW., Washington, D.C. 20460. Include the OMB control number in any correspondence. Do not send the completed forms to this address.

AS-BUILT COREHOLE MCC567

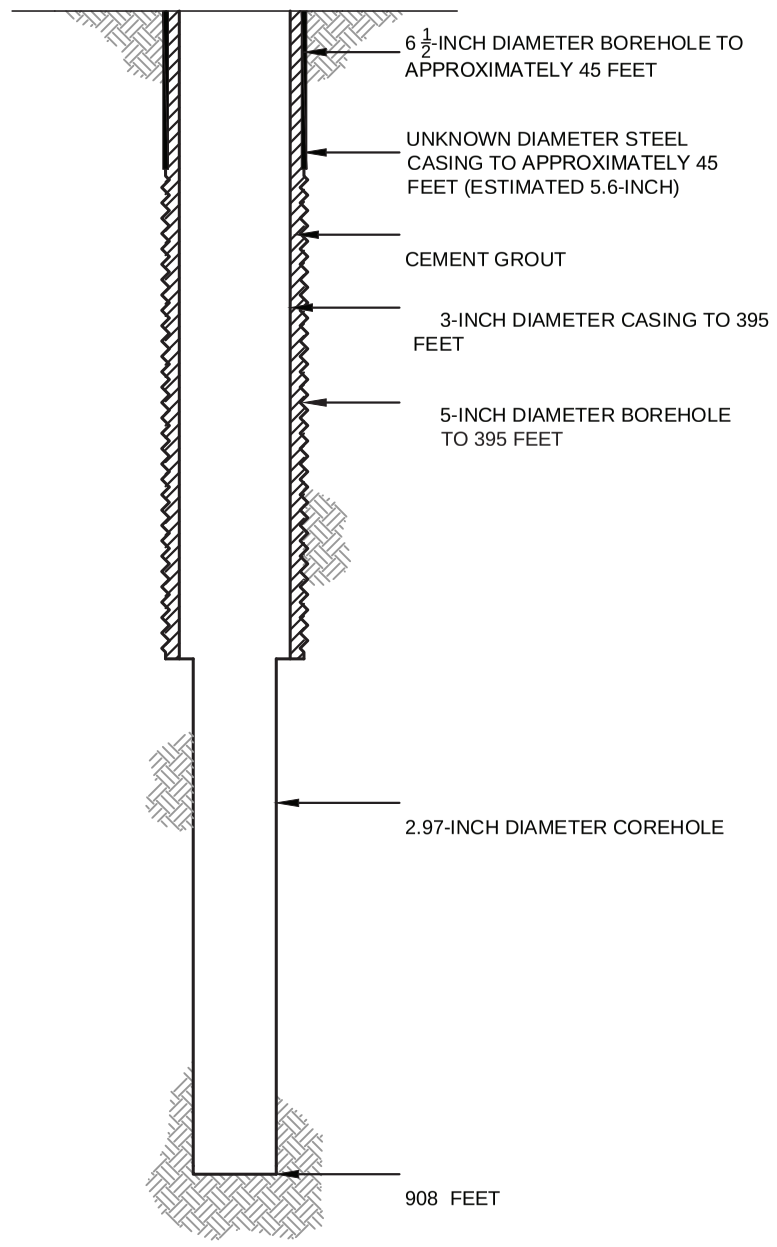

PROPOSED PLUGGING AND ABANDONMENT COREHOLE MCC567

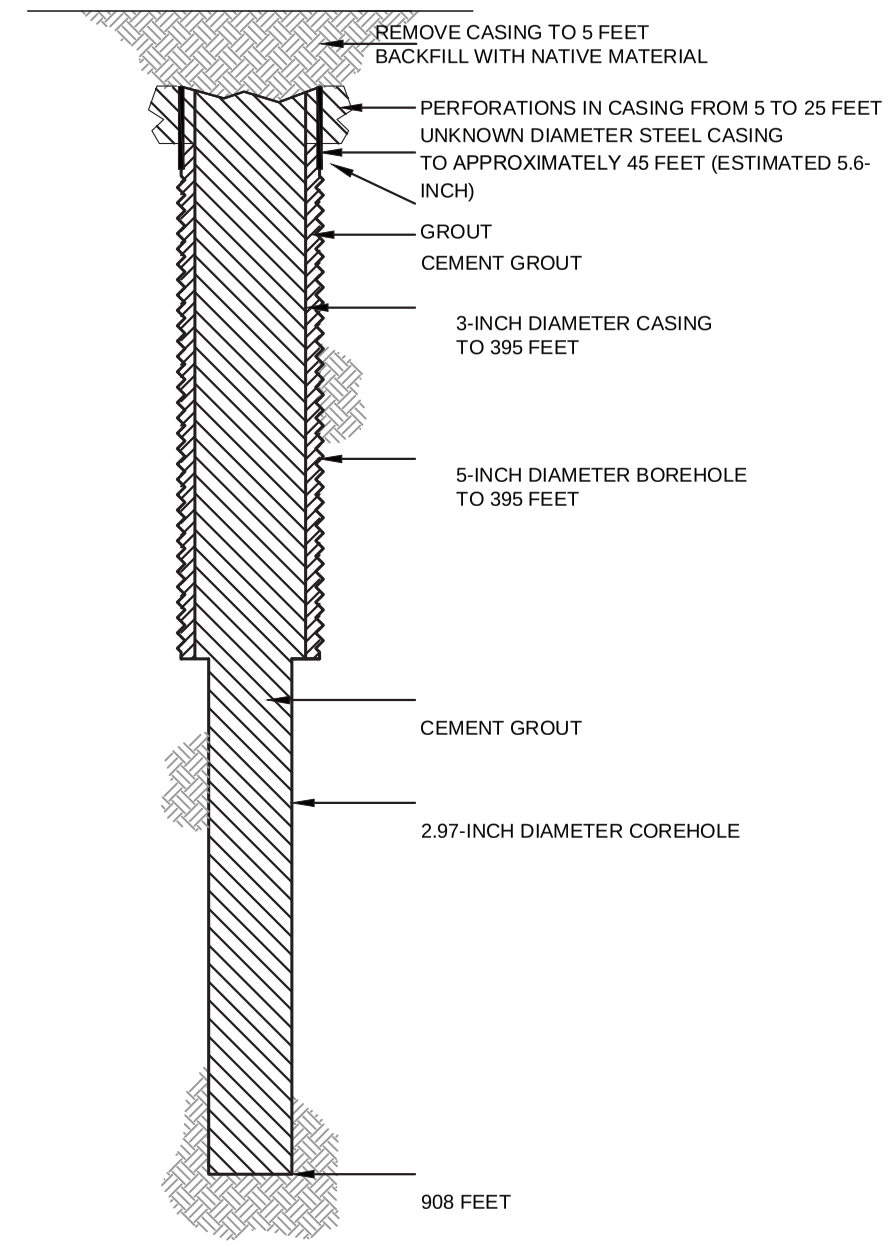

HALEY ALDRICH

FLORENCE COPPER, INC.
FLORENCE, ARIZONA

COREHOLE MCC567 DIAGRAM

FLORENCE COPPER INC.

NOT TO SCALE
SEPTEMBER 2019

FIGURE 1

MOBINI, GITA Printed: 4/21/2017 12:00 PM Layout: ABANDON (2)
\PROJECTS\CURIS RESOURCES38706-CURIS FEASIBILITY\DRAWINGS\EPA\WELL ABANDON\415S_ABANDON.DWG

OMB No. 2040-0042 Approval Expires 4/30/2022

United States Environmental Protection Agency

WELL REWORK RECORD, PLUGGING AND ABANDONMENT PLAN, OR PLUGGING AND ABANDONMENT AFFIDAVIT

Name and Address, Phone Number and/or Email of Permittee

Florence Copper Project
1575 W Hunt Hwy,
Florence, AZ 85132

Permit or EPA ID Number	API Number	Full Well Name
R9UIC-AZ3-FY11-1		MCC569

State	County
Arizona	Pinal

Locate well in two directions from nearest lines of quarter section and drilling unit

Latitude 33.05046696

Longitude -111.4358831

Surface Location

NW **1/4 of** SW **1/4 of Section** 28 **Township** 4S **Range** 9E

_____ **ft. from (N/S)** _____ **Line of quarter section**

_____ **ft. from (E/W)** _____ **Line of quarter section.**

Well Class	Timing of Action (pick one)	Type of Action (pick one)
☐ Class I ☐ Class II ☑ Class III ☐ Class V	☑ Notice Prior to Work Date Expected to Commence March 2021 ☐ Report After Work Date Work Ended	☐ Well Rework ☑ Plugging and Abandonment ☐ Conversion to a Non-Injection Well

Provide a narrative description of the work planned to be performed, or that was performed. Use additional pages as necessary. See instructions.

A workover rig capable of performing the required abandonment operations at the required depths will be moved in and set up over the core hole. The core hole will be inspected to determine the depth to which the hole remains open and if any obstructions are present in the core hole; the presence and condition of any existing collar will also be documented. If necessary, the core hole will be cleaned out to a depth of at least 100 feet below the bedrock-LBFU contact to enable placement of cement seals.

If collar is present, an attempt will be made to remove it. If removal of the collar is not feasible, it will be left in the hole and perforated as needed to allow an annular seal to be placed to a depth of at least 25 feet bgs. In areas of agricultural use, the surface casing will be cut at least 5 feet bgs and removed.

If the collar cannot be removed, it will be perforated from at least 20 feet below the bedrock-LBFU contact to at least 20 feet above the contact; from at least 20 feet below the base of the MFGU to at least 20 feet above the top of the MFGU; and from at least 25 feet bgs to 5 feet bgs.

A tremie pipe will be used to place Type V cement in the open core hole from the bottom of the core hole to the top of the core hole. Cement retainers, as described above, will be used to force cement grout into the annulus and behind perforated intervals, as necessary.

If the hole has been obstructed, as much cement as possible will be placed from 100 feet below the LBFU-bedrock contact to the top of the core hole.

The volume of Type V cement will be recorded and will not be less than the estimated volume of material required to fill each interval. All cement grout will consist of Type V cement, or equivalent approved in accordance with the UIC Permit.

Certification

I certify under the penalty of law that I have personally examined and am familiar with the information submitted in this document and all attachments and that, based on my inquiry of those individuals immediately responsible for obtaining the information, I believe that the information is true, accurate, and complete. I am aware that there are significant penalties for submitting false information, including the possibliity of fine and imprisonment. (Ref. 40 CFR § 144.32)

Name and Official Title *(Please type or print)*	Signature	Date Signed
Dan Johnson, VP - General Manager		10/3/2019

INSTRUCTIONS FOR FORM 7520-19

This form replaces forms 7520-12 and 7520-14. Use this form only when work is planned or has occurred that affects the well's construction or operation as an injection well, including work on the casing, tubing or packer (or for shallow Class V wells, the subsurface fluid emplacement network). Use one form per injection well. While reports or other information developed by contractors or service companies may be attached, this form must be signed by a responsible entity as described at 40 CFR 144.32. Note: operators closing Class V wells should use Form 7520-17.

NAME, ADDRESS, PHONE AND/OR EMAIL OF PERMITTEE: Enter the name and street address, city/town, state, and ZIP code of the permittee. Also provide an email address (if available) and/or a phone number.

PERMIT OR EPA ID NUMBER: Enter the well identification number or permit number assigned to the well by the EPA or the permitting authority.

API NUMBER: Enter the number assigned by the local jurisdiction (usually a State Oil and Gas Agency) using the American Petroleum Institute standard numbering system.

FULL WELL NAME: Enter the full name of the well or project.

Enter the **STATE** and **COUNTY** where the well is located. For States that do not have counties, use the name of that State's equivalent jurisdiction at a more local level.

WELL LOCATION: Fill in the complete township, range, and section to the nearest quarter-quarter section. A township is north or south of the baseline, and a range is east or west of the principal meridian (e.g., T12N, R34W). Also include the distance, in feet, from the nearest north or south line and nearest east or west line of the quarter-section. Also, enter the **latitude** and **longitude** of the well in decimal degrees, to five or six places if possible; be sure to include a negative sign for the longitude of a well in the Western Hemisphere and a negative sign for the latitude of a well in the Southern Hemisphere.

Enter the **WELL CLASS,** i.e., the class of injection well as defined in 40 CFR 144.6.

TIMING OF THE ACTION: Check ***Notice prior to work*** if the activity has not yet occurred (i.e., is planned). Check ***Report after work*** if the activity described has already occurred. As appropriate, include the date the activity is expected to start or the date the activity was completed. (Note this may not be available, e.g., for a plugging plan submitted with a permit application.)

TYPE OF ACTION: Check the appropriate box to describe the kind of activity being reported. Check ***Well Rework*** for work that was/will be performed on the well after it has already been in operation as an injection well. Check ***Plugging and Abandonment*** to report on plans for or descriptions of final closure/plugging after use as an injection well. Check ***Conversion to a Non-Injection Well*** if the well is to be converted to something other than an injection well.

Provide a **NARRATIVE DESCRIPTION** of the work planned to be performed, or that was performed. The narrative should include a description of the main procedures planned or that occurred during the work activity. A service company report, daily report, or similar document may be attached if it includes all the requested information and is clear and legible.

For well reworks, include the following information: The reason for the well rework; depths of activity; type of activity; changes to injection well configuration, well casing, or cement behind casing; any plug added to the well and its depth; any newly drilled interval and its depth; method(s) to demonstrate that the well has mechanical integrity (as applicable); and any deviations from the approved rework plan (as applicable).

For a well plugging plan, include the following information: Reason for the well plugging; number of plugs placed, and their depths; materials used as plugs (e.g., cast iron bridge plug, cement, cement retainer); method to set plugs; and wait-on-cement times, if any. Also provide one or more cost estimates from an independent firm in the business of plugging and abandoning wells to plug the well as described in the plan.

For well plugging affidavit, include the following information: Reason for the well plugging; number of plugs placed, and their depths; materials used as plugs (e.g., cast iron bridge plug, cement, cement retainer); method to set plugs; wait-on-cement times, if any; and any deviations from the approved plugging plan (if applicable).

For conversion to a non-injection well, include the following information: Depths of activity; type of activity; changes to injection well configuration, well casing, or cement behind casing; any plug added to the well and its depth; any newly drilled interval and its depth; depths of new perforations; and method(s) to demonstrate that the well has mechanical integrity (as applicable).

For all of the above activities, include a well sketch depicting the work, results of well tests/logging performed, service company tickets, and any other available information demonstrating how the work was/is to be performed. Also, specify whether depths are below ground surface, relative to Kelly bushing, etc.

CERTIFICATION: This form must be signed and dated by either: a responsible corporate officer for a corporation, by a general partner for a partnership, by the proprietor of a sole proprietorship, or by a principal executive or ranking elected official for a public agency.

PAPERWORK REDUCTION ACT NOTICE: The public reporting and recordkeeping burden for this collection of information is estimated to average between 6.0 and 7.9 hours per response, depending on the injection well class. Burden means the total time, effort, or financial resource expended by persons to generate, maintain, retain, or disclose or provide information to or for a Federal Agency. This includes the time needed to review instructions; develop, acquire, install, and utilize technology and systems for the purposes of collecting, validating, and verifying information, processing and maintaining information, and disclosing and providing information; adjust the existing ways to comply with any previously applicable instructions and requirements; train personnel to be able to respond to the collection of information; search data sources; complete and review the collection of information; and, transmit or otherwise disclose the information. An agency may not conduct or sponsor, and a person is not required to respond to, a collection of information unless it displays a currently valid OMB control number. Send comments on the Agency's need for this information, the accuracy of the provided burden estimates, and any suggested methods for minimizing respondent burden, including the use of automated collection techniques to Director, Collection Strategies Division, U.S. Environmental Protection Agency (2822), 1200 Pennsylvania Ave., NW., Washington, D.C. 20460. Include the OMB control number in any correspondence. Do not send the completed forms to this address.

AS-BUILT COREHOLE MCC569

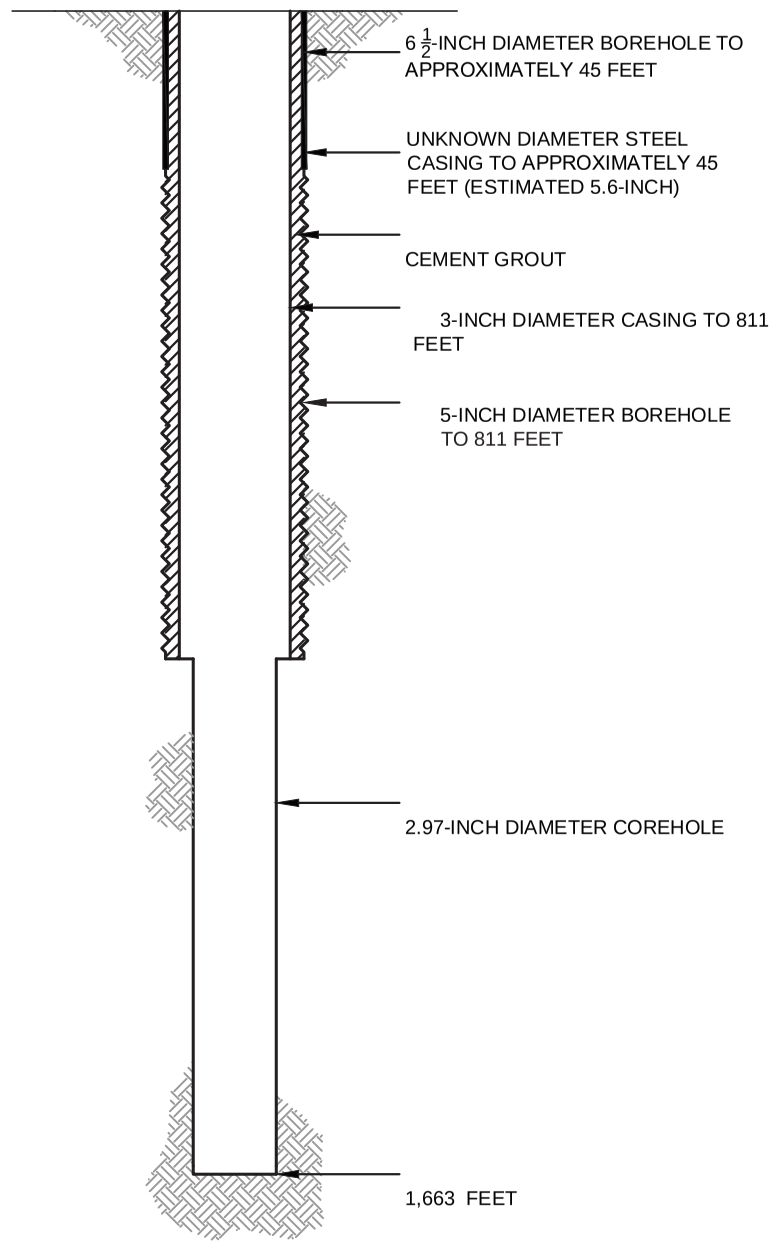

PROPOSED PLUGGING AND ABANDONMENT COREHOLE MCC569

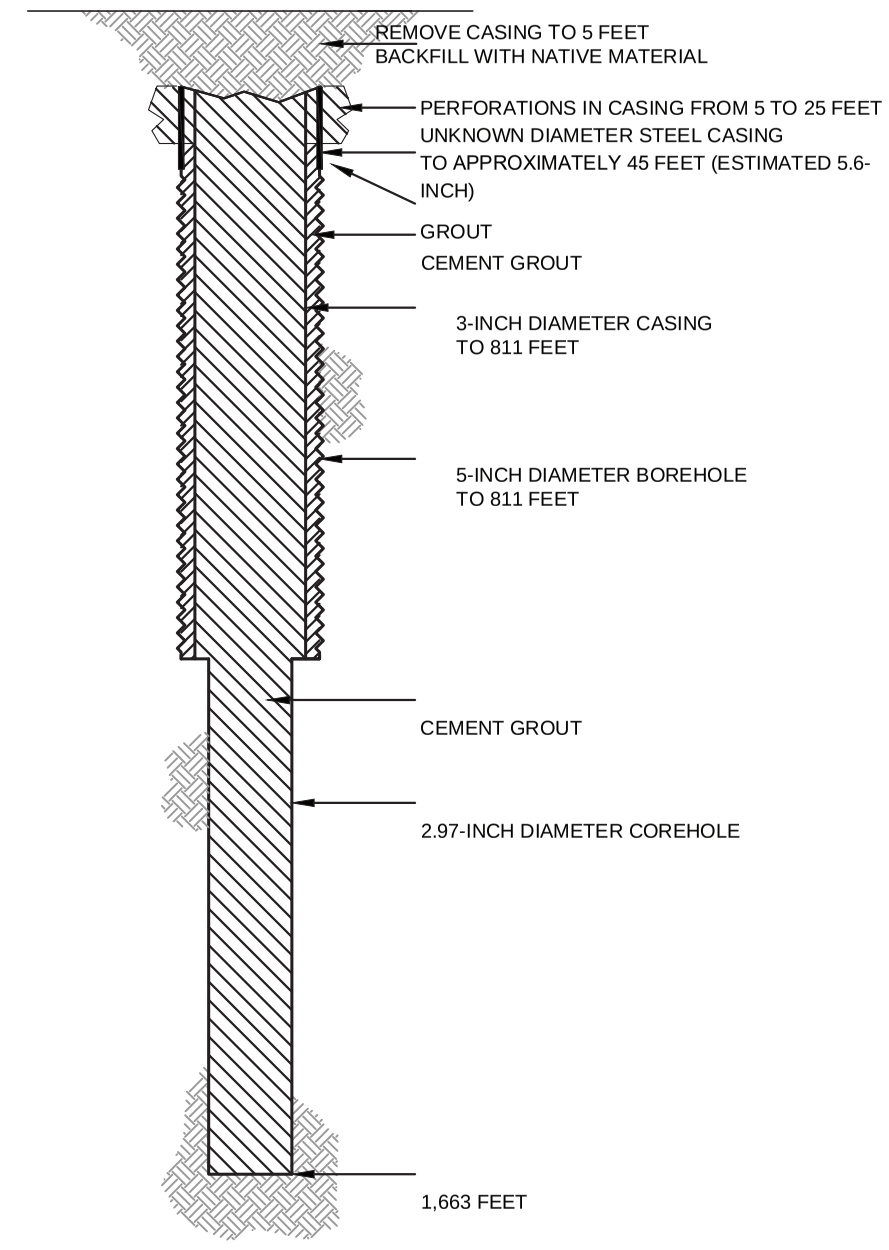

HALEY ALDRICH

FLORENCE COPPER, INC.
FLORENCE, ARIZONA

COREHOLE MCC569 DIAGRAM

FLORENCE COPPER INC.

NOT TO SCALE
SEPTEMBER 2019

FIGURE 1

MOBINI, GITA Printed: 4/21/2017 12:00 PM Layout: ABANDON (2)
\PROJECTS\CURIS RESOURCES38706-CURIS FEASIBILITY\DRAWINGS\EPA\WELL ABANDON\415S_ABANDON.DWG

EXHIBIT E-4

Plugging and Abandonment Forms for BHP Class III Test Wells

OMB No. 2040-0042 Approval Expires 4/30/2022

United States Environmental Protection Agency

WELL REWORK RECORD, PLUGGING AND ABANDONMENT PLAN, OR PLUGGING AND ABANDONMENT AFFIDAVIT

Name and Address, Phone Number and/or Email of Permittee

Florence Copper Project
1575 W Hunt Hwy,
Florence, AZ 85132

Permit or EPA ID Number	API Number	Full Well Name
R9UIC-AZ3-FY11-1		BHP-1

State	County
Arizona	Pinal

Locate well in two directions from nearest lines of quarter section and drilling unit

Latitude 33.04692056

Surface Location

SW **1/4 of** SE **1/4 of Section** 28 **Township** 4S **Range** 9E

Longitude -111.4291914

390 **ft. from (N/S)** S **Line of quarter section**

435 **ft. from (E/W)** W **Line of quarter section.**

Well Class	Timing of Action (pick one)	Type of Action (pick one)
☐ Class I ☐ Class II ☑ Class III ☐ Class V	☑ Notice Prior to Work Date Expected to Commence March 2021 ☐ Report After Work Date Work Ended	☐ Well Rework ☑ Plugging and Abandonment ☐ Conversion to a Non-Injection Well

Provide a narrative description of the work planned to be performed, or that was performed. Use additional pages as necessary. See instructions.

A workover rig capable of performing the required abandonment operations at the required depths will be moved in and set up over the well. The well casing will be inspected to determine the depth to which the well remains open and if any obstructions are present in the casing; the presence and condition of any existing surface casing will also be documented. If necessary, the well casing will be cleaned out to the bottom of the deepest screen or perforation to enable placement of cement seals.
If surface casing is present, an attempt will be made to remove it. If removal of the surface casing is not feasible, it will be left in the hole and perforated as needed to allow an annular seal to be placed to a depth of at least 25 feet bgs. In areas of agricultural use, the surface casing will be cut at least 5 feet bgs and removed.
If the surface casing cannot be removed, it will be perforated from at least 20 feet below the bedrock-LBFU contact to at least 20 feet above the contact; from at least 20 feet below the base of the MFGU to at least 20 feet above the top of the MFGU; and from at least 25 feet bgs to 5 feet bgs.
A tremie pipe will be used to place Type V cement in the open well from the bottom of the well casing to the top of the well casing. Cement retainers, as described above, will be used to force cement grout into the annulus and behind perforated screen intervals, as necessary.
If the well casing has been obstructed, as much cement as possible will be placed from 100 feet below the LBFU-bedrock contact to the top of the casing.
The volume of Type V cement will be recorded and will not be less than the estimated volume of material required to fill each interval. All cement grout will consist of Type V cement, or equivalent approved in accordance with the UIC Permit.

Perforated Interval: 403 – 740 Feet

Certification

I certify under the penalty of law that I have personally examined and am familiar with the information submitted in this document and all attachments and that, based on my inquiry of those individuals immediately responsible for obtaining the information, I believe that the information is true, accurate, and complete. I am aware that there are significant penalties for submitting false information, including the possibliity of fine and imprisonment. (Ref. 40 CFR § 144.32)

Name and Official Title *(Please type or print)*	Signature	Date Signed
Dan Johnson, VP - General Manager		10/3/2019

INSTRUCTIONS FOR FORM 7520-19

This form replaces forms 7520-12 and 7520-14. Use this form only when work is planned or has occurred that affects the well's construction or operation as an injection well, including work on the casing, tubing or packer (or for shallow Class V wells, the subsurface fluid emplacement network). Use one form per injection well. While reports or other information developed by contractors or service companies may be attached, this form must be signed by a responsible entity as described at 40 CFR 144.32. Note: operators closing Class V wells should use Form 7520-17.

NAME, ADDRESS, PHONE AND/OR EMAIL OF PERMITTEE: Enter the name and street address, city/town, state, and ZIP code of the permittee. Also provide an email address (if available) and/or a phone number.

PERMIT OR EPA ID NUMBER: Enter the well identification number or permit number assigned to the well by the EPA or the permitting authority.

API NUMBER: Enter the number assigned by the local jurisdiction (usually a State Oil and Gas Agency) using the American Petroleum Institute standard numbering system.

FULL WELL NAME: Enter the full name of the well or project.

Enter the **STATE** and **COUNTY** where the well is located. For States that do not have counties, use the name of that State's equivalent jurisdiction at a more local level.

WELL LOCATION: Fill in the complete township, range, and section to the nearest quarter-quarter section. A township is north or south of the baseline, and a range is east or west of the principal meridian (e.g., T12N, R34W). Also include the distance, in feet, from the nearest north or south line and nearest east or west line of the quarter-section. Also, enter the **latitude** and **longitude** of the well in decimal degrees, to five or six places if possible; be sure to include a negative sign for the longitude of a well in the Western Hemisphere and a negative sign for the latitude of a well in the Southern Hemisphere.

Enter the **WELL CLASS,** i.e., the class of injection well as defined in 40 CFR 144.6.

TIMING OF THE ACTION: Check ***Notice prior to work*** if the activity has not yet occurred (i.e., is planned). Check ***Report after work*** if the activity described has already occurred. As appropriate, include the date the activity is expected to start or the date the activity was completed. (Note this may not be available, e.g., for a plugging plan submitted with a permit application.)

TYPE OF ACTION: Check the appropriate box to describe the kind of activity being reported. Check ***Well Rework*** for work that was/will be performed on the well after it has already been in operation as an injection well. Check ***Plugging and Abandonment*** to report on plans for or descriptions of final closure/plugging after use as an injection well. Check ***Conversion to a Non-Injection Well*** if the well is to be converted to something other than an injection well.

Provide a **NARRATIVE DESCRIPTION** of the work planned to be performed, or that was performed. The narrative should include a description of the main procedures planned or that occurred during the work activity. A service company report, daily report, or similar document may be attached if it includes all the requested information and is clear and legible.

For well reworks, include the following information: The reason for the well rework; depths of activity; type of activity; changes to injection well configuration, well casing, or cement behind casing; any plug added to the well and its depth; any newly drilled interval and its depth; method(s) to demonstrate that the well has mechanical integrity (as applicable); and any deviations from the approved rework plan (as applicable).

For a well plugging plan, include the following information: Reason for the well plugging; number of plugs placed, and their depths; materials used as plugs (e.g., cast iron bridge plug, cement, cement retainer); method to set plugs; and wait-on-cement times, if any. Also provide one or more cost estimates from an independent firm in the business of plugging and abandoning wells to plug the well as described in the plan.

For well plugging affidavit, include the following information: Reason for the well plugging; number of plugs placed, and their depths; materials used as plugs (e.g., cast iron bridge plug, cement, cement retainer); method to set plugs; wait-on-cement times, if any; and any deviations from the approved plugging plan (if applicable).

For conversion to a non-injection well, include the following information: Depths of activity; type of activity; changes to injection well configuration, well casing, or cement behind casing; any plug added to the well and its depth; any newly drilled interval and its depth; depths of new perforations; and method(s) to demonstrate that the well has mechanical integrity (as applicable).

For all of the above activities, include a well sketch depicting the work, results of well tests/logging performed, service company tickets, and any other available information demonstrating how the work was/is to be performed. Also, specify whether depths are below ground surface, relative to Kelly bushing, etc.

CERTIFICATION: This form must be signed and dated by either: a responsible corporate officer for a corporation, by a general partner for a partnership, by the proprietor of a sole proprietorship, or by a principal executive or ranking elected official for a public agency.

PAPERWORK REDUCTION ACT NOTICE: The public reporting and recordkeeping burden for this collection of information is estimated to average between 6.0 and 7.9 hours per response, depending on the injection well class. Burden means the total time, effort, or financial resource expended by persons to generate, maintain, retain, or disclose or provide information to or for a Federal Agency. This includes the time needed to review instructions; develop, acquire, install, and utilize technology and systems for the purposes of collecting, validating, and verifying information, processing and maintaining information, and disclosing and providing information; adjust the existing ways to comply with any previously applicable instructions and requirements; train personnel to be able to respond to the collection of information; search data sources; complete and review the collection of information; and, transmit or otherwise disclose the information. An agency may not conduct or sponsor, and a person is not required to respond to, a collection of information unless it displays a currently valid OMB control number. Send comments on the Agency's need for this information, the accuracy of the provided burden estimates, and any suggested methods for minimizing respondent burden, including the use of automated collection techniques to Director, Collection Strategies Division, U.S. Environmental Protection Agency (2822), 1200 Pennsylvania Ave., NW., Washington, D.C. 20460. Include the OMB control number in any correspondence. Do not send the completed forms to this address.

Drawing Name: G:\PROJECTS\CURIS RESOURCES\38706-CURIS FEASIBILITY\DRAWINGS\JULY 2014 UIC APP\BHP WELL SCHEMATICS\BHP-1.DWG
Operator Name: CANDREVA, LAUREN Plot Date: August 5, 2014 Drawing Layout: HA-FIG-A-L

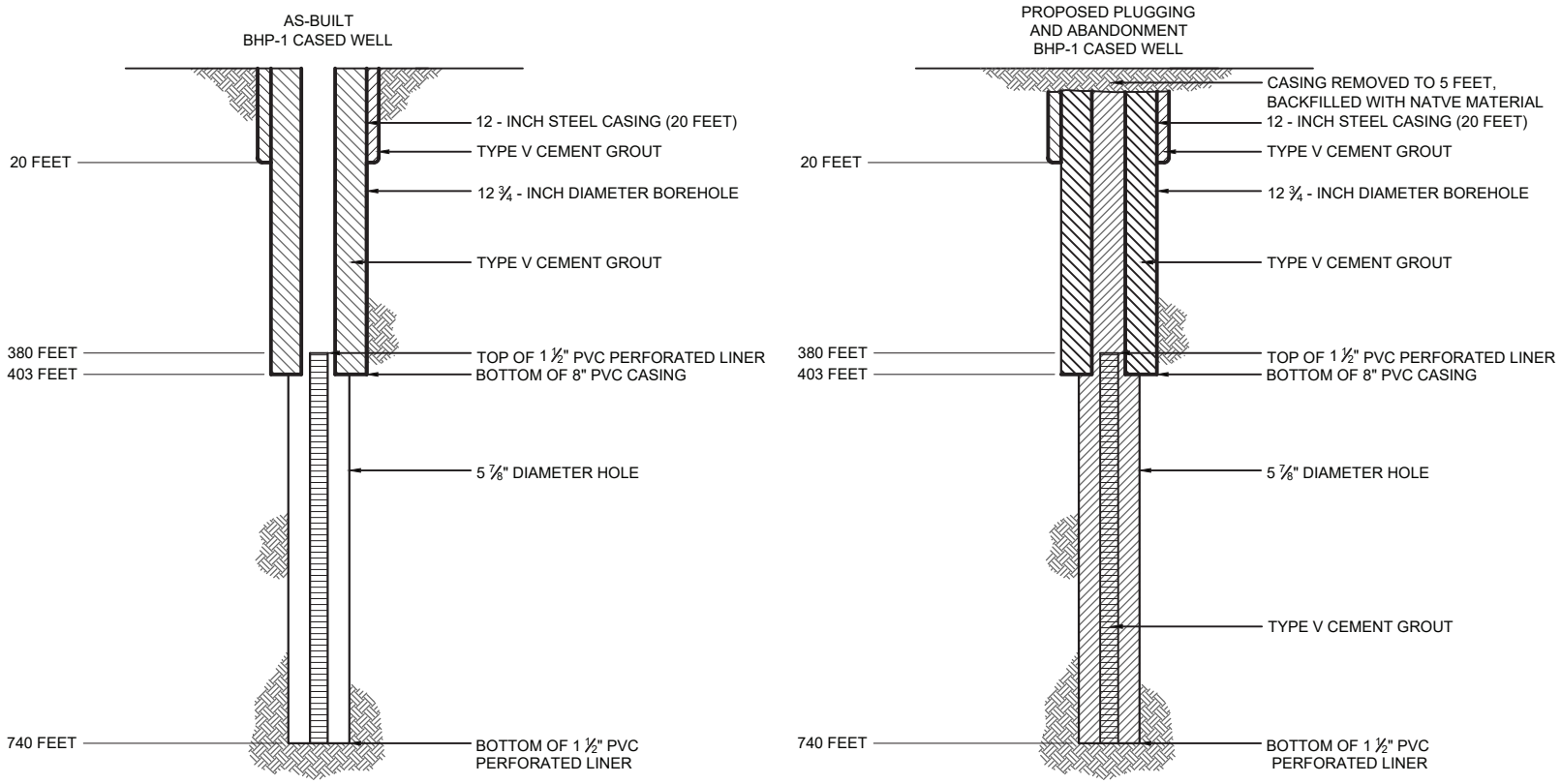

NOTE

WELL DESIGN DETAILS ARE BASED ON BHP RECORDS.

HALEY & ALDRICH

FLORENCE COPPER INC.
FLORENCE, ARIZONA

WELL BHP-1 SCHEMATIC DIAGRAM

SCALE: AS SHOWN
JULY 2014

FIGURE 1

OMB No. 2040-0042 Approval Expires 4/30/2022

United States Environmental Protection Agency

WELL REWORK RECORD, PLUGGING AND ABANDONMENT PLAN, OR PLUGGING AND ABANDONMENT AFFIDAVIT

Name and Address, Phone Number and/or Email of Permittee

Florence Copper Project
1575 W Hunt Hwy,
Florence, AZ 85132

Permit or EPA ID Number	API Number	Full Well Name
R9UIC-AZ3-FY11-1		BHP-2

State	County
Arizona	Pinal

Locate well in two directions from nearest lines of quarter section and drilling unit

Latitude 33.04678249

Longitude -111.4290257

Surface Location

SW **1/4 of** SE **1/4 of Section** 28 **Township** 4S **Range** 9E

335 **ft. from (N/S)** S **Line of quarter section**

485 **ft. from (E/W)** W **Line of quarter section.**

Well Class	Timing of Action (pick one)	Type of Action (pick one)
☐ Class I ☐ Class II ☑ Class III ☐ Class V	☑ Notice Prior to Work Date Expected to Commence March 2021 ☐ Report After Work Date Work Ended	☐ Well Rework ☑ Plugging and Abandonment ☐ Conversion to a Non-Injection Well

Provide a narrative description of the work planned to be performed, or that was performed. Use additional pages as necessary. See instructions.

A workover rig capable of performing the required abandonment operations at the required depths will be moved in and set up over the well. The well casing will be inspected to determine the depth to which the well remains open and if any obstructions are present in the casing; the presence and condition of any existing surface casing will also be documented. If necessary, the well casing will be cleaned out to the bottom of the deepest screen or perforation to enable placement of cement seals.
If surface casing is present, an attempt will be made to remove it. If removal of the surface casing is not feasible, it will be left in the hole and perforated as needed to allow an annular seal to be placed to a depth of at least 25 feet bgs. In areas of agricultural use, the surface casing will be cut at least 5 feet bgs and removed.
If the surface casing cannot be removed, it will be perforated from at least 20 feet below the bedrock-LBFU contact to at least 20 feet above the contact; from at least 20 feet below the base of the MFGU to at least 20 feet above the top of the MFGU; and from at least 25 feet bgs to 5 feet bgs.
A tremie pipe will be used to place Type V cement in the open well from the bottom of the well casing to the top of the well casing. Cement retainers, as described above, will be used to force cement grout into the annulus and behind perforated screen intervals, as necessary.
If the well casing has been obstructed, as much cement as possible will be placed from 100 feet below the LBFU-bedrock contact to the top of the casing.
The volume of Type V cement will be recorded and will not be less than the estimated volume of material required to fill each interval. All cement grout will consist of Type V cement, or equivalent approved in accordance with the UIC Permit.

Perforated Interval: 496 – 770 Feet

Certification

I certify under the penalty of law that I have personally examined and am familiar with the information submitted in this document and all attachments and that, based on my inquiry of those individuals immediately responsible for obtaining the information, I believe that the information is true, accurate, and complete. I am aware that there are significant penalties for submitting false information, including the possibliity of fine and imprisonment. (Ref. 40 CFR § 144.32)

Name and Official Title *(Please type or print)*	Signature	Date Signed
Dan Johnson, VP - General Manager		10/3/2019

INSTRUCTIONS FOR FORM 7520-19

This form replaces forms 7520-12 and 7520-14. Use this form only when work is planned or has occurred that affects the well's construction or operation as an injection well, including work on the casing, tubing or packer (or for shallow Class V wells, the subsurface fluid emplacement network). Use one form per injection well. While reports or other information developed by contractors or service companies may be attached, this form must be signed by a responsible entity as described at 40 CFR 144.32. Note: operators closing Class V wells should use Form 7520-17.

NAME, ADDRESS, PHONE AND/OR EMAIL OF PERMITTEE: Enter the name and street address, city/town, state, and ZIP code of the permittee. Also provide an email address (if available) and/or a phone number.

PERMIT OR EPA ID NUMBER: Enter the well identification number or permit number assigned to the well by the EPA or the permitting authority.

API NUMBER: Enter the number assigned by the local jurisdiction (usually a State Oil and Gas Agency) using the American Petroleum Institute standard numbering system.

FULL WELL NAME: Enter the full name of the well or project.

Enter the **STATE** and **COUNTY** where the well is located. For States that do not have counties, use the name of that State's equivalent jurisdiction at a more local level.

WELL LOCATION: Fill in the complete township, range, and section to the nearest quarter-quarter section. A township is north or south of the baseline, and a range is east or west of the principal meridian (e.g., T12N, R34W). Also include the distance, in feet, from the nearest north or south line and nearest east or west line of the quarter-section. Also, enter the **latitude** and **longitude** of the well in decimal degrees, to five or six places if possible; be sure to include a negative sign for the longitude of a well in the Western Hemisphere and a negative sign for the latitude of a well in the Southern Hemisphere.

Enter the **WELL CLASS,** i.e., the class of injection well as defined in 40 CFR 144.6.

TIMING OF THE ACTION: Check ***Notice prior to work*** if the activity has not yet occurred (i.e., is planned). Check ***Report after work*** if the activity described has already occurred. As appropriate, include the date the activity is expected to start or the date the activity was completed. (Note this may not be available, e.g., for a plugging plan submitted with a permit application.)

TYPE OF ACTION: Check the appropriate box to describe the kind of activity being reported. Check ***Well Rework*** for work that was/will be performed on the well after it has already been in operation as an injection well. Check ***Plugging and Abandonment*** to report on plans for or descriptions of final closure/plugging after use as an injection well. Check ***Conversion to a Non-Injection Well*** if the well is to be converted to something other than an injection well.

Provide a **NARRATIVE DESCRIPTION** of the work planned to be performed, or that was performed. The narrative should include a description of the main procedures planned or that occurred during the work activity. A service company report, daily report, or similar document may be attached if it includes all the requested information and is clear and legible.

For well reworks, include the following information: The reason for the well rework; depths of activity; type of activity; changes to injection well configuration, well casing, or cement behind casing; any plug added to the well and its depth; any newly drilled interval and its depth; method(s) to demonstrate that the well has mechanical integrity (as applicable); and any deviations from the approved rework plan (as applicable).

For a well plugging plan, include the following information: Reason for the well plugging; number of plugs placed, and their depths; materials used as plugs (e.g., cast iron bridge plug, cement, cement retainer); method to set plugs; and wait-on-cement times, if any. Also provide one or more cost estimates from an independent firm in the business of plugging and abandoning wells to plug the well as described in the plan.

For well plugging affidavit, include the following information: Reason for the well plugging; number of plugs placed, and their depths; materials used as plugs (e.g., cast iron bridge plug, cement, cement retainer); method to set plugs; wait-on-cement times, if any; and any deviations from the approved plugging plan (if applicable).

For conversion to a non-injection well, include the following information: Depths of activity; type of activity; changes to injection well configuration, well casing, or cement behind casing; any plug added to the well and its depth; any newly drilled interval and its depth; depths of new perforations; and method(s) to demonstrate that the well has mechanical integrity (as applicable).

For all of the above activities, include a well sketch depicting the work, results of well tests/logging performed, service company tickets, and any other available information demonstrating how the work was/is to be performed. Also, specify whether depths are below ground surface, relative to Kelly bushing, etc.

CERTIFICATION: This form must be signed and dated by either: a responsible corporate officer for a corporation, by a general partner for a partnership, by the proprietor of a sole proprietorship, or by a principal executive or ranking elected official for a public agency.

PAPERWORK REDUCTION ACT NOTICE: The public reporting and recordkeeping burden for this collection of information is estimated to average between 6.0 and 7.9 hours per response, depending on the injection well class. Burden means the total time, effort, or financial resource expended by persons to generate, maintain, retain, or disclose or provide information to or for a Federal Agency. This includes the time needed to review instructions; develop, acquire, install, and utilize technology and systems for the purposes of collecting, validating, and verifying information, processing and maintaining information, and disclosing and providing information; adjust the existing ways to comply with any previously applicable instructions and requirements; train personnel to be able to respond to the collection of information; search data sources; complete and review the collection of information; and, transmit or otherwise disclose the information. An agency may not conduct or sponsor, and a person is not required to respond to, a collection of information unless it displays a currently valid OMB control number. Send comments on the Agency's need for this information, the accuracy of the provided burden estimates, and any suggested methods for minimizing respondent burden, including the use of automated collection techniques to Director, Collection Strategies Division, U.S. Environmental Protection Agency (2822), 1200 Pennsylvania Ave., NW., Washington, D.C. 20460. Include the OMB control number in any correspondence. Do not send the completed forms to this address.

Drawing Name: G:\PROJECTS\CURIS RESOURCES\38706-CURIS FEASIBILITY\DRAWINGS\JULY 2014 UIC APP\BHP WELL SCHEMATICS\BHP-2.DWG
Operator Name: CANDREVA, LAUREN Plot Date: August 5, 2014 Drawing Layout: HA-FIG-A-L

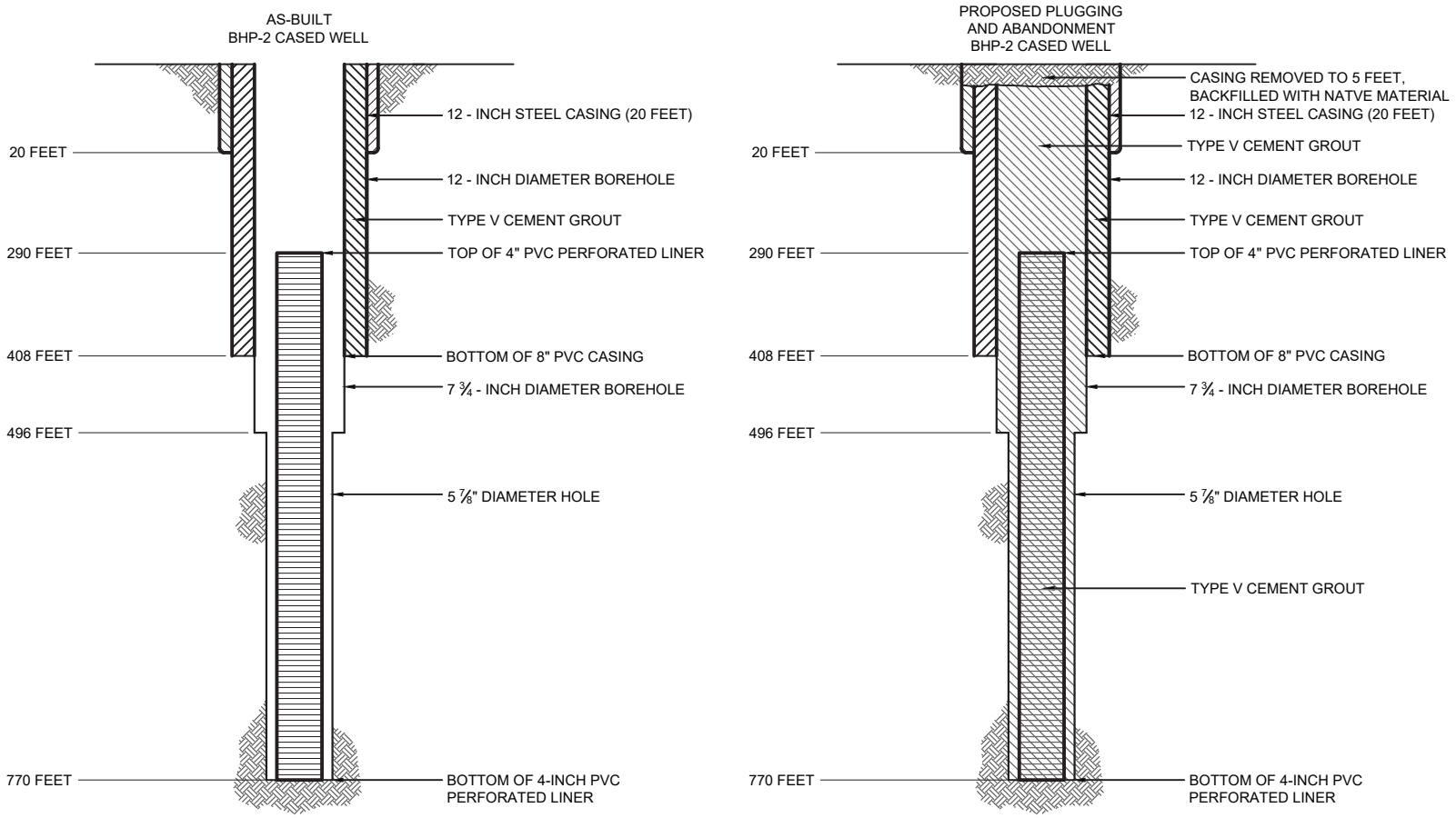

NOTE

WELL DESIGN DETAILS ARE BASED ON BHP RECORDS.

HALEY & ALDRICH

FLORENCE COPPER INC.
FLORENCE, ARIZONA

WELL BHP-2 SCHEMATIC DIAGRAM

SCALE: AS SHOWN
JULY 2014

FIGURE 1

OMB No. 2040-0042 Approval Expires 4/30/2022

United States Environmental Protection Agency

WELL REWORK RECORD, PLUGGING AND ABANDONMENT PLAN, OR PLUGGING AND ABANDONMENT AFFIDAVIT

Name and Address, Phone Number and/or Email of Permittee

Florence Copper Project
1575 W Hunt Hwy,
Florence, AZ 85132

Permit or EPA ID Number	API Number	Full Well Name
R9UIC-AZ3-FY11-1		BHP-3

State	County
Arizona	Pinal

Locate well in two directions from nearest lines of quarter section and drilling unit

Latitude 33.04706562

Longitude -111.4290339

Surface Location

SW **1/4 of** SE **1/4 of Section** 28 **Township** 4S **Range** 9E

440 **ft. from (N/S)** S **Line of quarter section**

485 **ft. from (E/W)** W **Line of quarter section.**

Well Class	Timing of Action (pick one)	Type of Action (pick one)
☐ Class I ☐ Class II ☑ Class III ☐ Class V	☑ Notice Prior to Work Date Expected to Commence March 2021 ☐ Report After Work Date Work Ended	☐ Well Rework ☑ Plugging and Abandonment ☐ Conversion to a Non-Injection Well

Provide a narrative description of the work planned to be performed, or that was performed. Use additional pages as necessary. See instructions.

A workover rig capable of performing the required abandonment operations at the required depths will be moved in and set up over the well. The well casing will be inspected to determine the depth to which the well remains open and if any obstructions are present in the casing; the presence and condition of any existing surface casing will also be documented. If necessary, the well casing will be cleaned out to the bottom of the deepest screen or perforation to enable placement of cement seals.
If surface casing is present, an attempt will be made to remove it. If removal of the surface casing is not feasible, it will be left in the hole and perforated as needed to allow an annular seal to be placed to a depth of at least 25 feet bgs. In areas of agricultural use, the surface casing will be cut at least 5 feet bgs and removed.
If the surface casing cannot be removed, it will be perforated from at least 20 feet below the bedrock-LBFU contact to at least 20 feet above the contact; from at least 20 feet below the base of the MFGU to at least 20 feet above the top of the MFGU; and from at least 25 feet bgs to 5 feet bgs.
A tremie pipe will be used to place Type V cement in the open well from the bottom of the well casing to the top of the well casing. Cement retainers, as described above, will be used to force cement grout into the annulus and behind perforated screen intervals, as necessary.
If the well casing has been obstructed, as much cement as possible will be placed from 100 feet below the LBFU-bedrock contact to the top of the casing.
The volume of Type V cement will be recorded and will not be less than the estimated volume of material required to fill each interval. All cement grout will consist of Type V cement, or equivalent approved in accordance with the UIC Permit.

Perforated Interval: 403 – 860 Feet

Certification

I certify under the penalty of law that I have personally examined and am familiar with the information submitted in this document and all attachments and that, based on my inquiry of those individuals immediately responsible for obtaining the information, I believe that the information is true, accurate, and complete. I am aware that there are significant penalties for submitting false information, including the possibliity of fine and imprisonment. (Ref. 40 CFR § 144.32)

Name and Official Title *(Please type or print)*	Signature	Date Signed
Dan Johnson, VP - General Manager		10/3/2019

INSTRUCTIONS FOR FORM 7520-19

This form replaces forms 7520-12 and 7520-14. Use this form only when work is planned or has occurred that affects the well's construction or operation as an injection well, including work on the casing, tubing or packer (or for shallow Class V wells, the subsurface fluid emplacement network). Use one form per injection well. While reports or other information developed by contractors or service companies may be attached, this form must be signed by a responsible entity as described at 40 CFR 144.32. Note: operators closing Class V wells should use Form 7520-17.

NAME, ADDRESS, PHONE AND/OR EMAIL OF PERMITTEE: Enter the name and street address, city/town, state, and ZIP code of the permittee. Also provide an email address (if available) and/or a phone number.

PERMIT OR EPA ID NUMBER: Enter the well identification number or permit number assigned to the well by the EPA or the permitting authority.

API NUMBER: Enter the number assigned by the local jurisdiction (usually a State Oil and Gas Agency) using the American Petroleum Institute standard numbering system.

FULL WELL NAME: Enter the full name of the well or project.

Enter the **STATE** and **COUNTY** where the well is located. For States that do not have counties, use the name of that State's equivalent jurisdiction at a more local level.

WELL LOCATION: Fill in the complete township, range, and section to the nearest quarter-quarter section. A township is north or south of the baseline, and a range is east or west of the principal meridian (e.g., T12N, R34W). Also include the distance, in feet, from the nearest north or south line and nearest east or west line of the quarter-section. Also, enter the **latitude** and **longitude** of the well in decimal degrees, to five or six places if possible; be sure to include a negative sign for the longitude of a well in the Western Hemisphere and a negative sign for the latitude of a well in the Southern Hemisphere.

Enter the **WELL CLASS,** i.e., the class of injection well as defined in 40 CFR 144.6.

TIMING OF THE ACTION: Check ***Notice prior to work*** if the activity has not yet occurred (i.e., is planned). Check ***Report after work*** if the activity described has already occurred. As appropriate, include the date the activity is expected to start or the date the activity was completed. (Note this may not be available, e.g., for a plugging plan submitted with a permit application.)

TYPE OF ACTION: Check the appropriate box to describe the kind of activity being reported. Check ***Well Rework*** for work that was/will be performed on the well after it has already been in operation as an injection well. Check ***Plugging and Abandonment*** to report on plans for or descriptions of final closure/plugging after use as an injection well. Check ***Conversion to a Non-Injection Well*** if the well is to be converted to something other than an injection well.

Provide a **NARRATIVE DESCRIPTION** of the work planned to be performed, or that was performed. The narrative should include a description of the main procedures planned or that occurred during the work activity. A service company report, daily report, or similar document may be attached if it includes all the requested information and is clear and legible.

For well reworks, include the following information: The reason for the well rework; depths of activity; type of activity; changes to injection well configuration, well casing, or cement behind casing; any plug added to the well and its depth; any newly drilled interval and its depth; method(s) to demonstrate that the well has mechanical integrity (as applicable); and any deviations from the approved rework plan (as applicable).

For a well plugging plan, include the following information: Reason for the well plugging; number of plugs placed, and their depths; materials used as plugs (e.g., cast iron bridge plug, cement, cement retainer); method to set plugs; and wait-on-cement times, if any. Also provide one or more cost estimates from an independent firm in the business of plugging and abandoning wells to plug the well as described in the plan.

For well plugging affidavit, include the following information: Reason for the well plugging; number of plugs placed, and their depths; materials used as plugs (e.g., cast iron bridge plug, cement, cement retainer); method to set plugs; wait-on-cement times, if any; and any deviations from the approved plugging plan (if applicable).

For conversion to a non-injection well, include the following information: Depths of activity; type of activity; changes to injection well configuration, well casing, or cement behind casing; any plug added to the well and its depth; any newly drilled interval and its depth; depths of new perforations; and method(s) to demonstrate that the well has mechanical integrity (as applicable).

For all of the above activities, include a well sketch depicting the work, results of well tests/logging performed, service company tickets, and any other available information demonstrating how the work was/is to be performed. Also, specify whether depths are below ground surface, relative to Kelly bushing, etc.

CERTIFICATION: This form must be signed and dated by either: a responsible corporate officer for a corporation, by a general partner for a partnership, by the proprietor of a sole proprietorship, or by a principal executive or ranking elected official for a public agency.

PAPERWORK REDUCTION ACT NOTICE: The public reporting and recordkeeping burden for this collection of information is estimated to average between 6.0 and 7.9 hours per response, depending on the injection well class. Burden means the total time, effort, or financial resource expended by persons to generate, maintain, retain, or disclose or provide information to or for a Federal Agency. This includes the time needed to review instructions; develop, acquire, install, and utilize technology and systems for the purposes of collecting, validating, and verifying information, processing and maintaining information, and disclosing and providing information; adjust the existing ways to comply with any previously applicable instructions and requirements; train personnel to be able to respond to the collection of information; search data sources; complete and review the collection of information; and, transmit or otherwise disclose the information. An agency may not conduct or sponsor, and a person is not required to respond to, a collection of information unless it displays a currently valid OMB control number. Send comments on the Agency's need for this information, the accuracy of the provided burden estimates, and any suggested methods for minimizing respondent burden, including the use of automated collection techniques to Director, Collection Strategies Division, U.S. Environmental Protection Agency (2822), 1200 Pennsylvania Ave., NW., Washington, D.C. 20460. Include the OMB control number in any correspondence. Do not send the completed forms to this address.

Drawing Name: G:\PROJECTS\CURIS RESOURCES\38706-CURIS FEASIBILITY\DRAWINGS\JULY 2014 UIC APP\BHP WELL SCHEMATICS\BHP-3.DWG
Operator Name: CANDREVA, LAUREN Plot Date: August 5, 2014 Drawing Layout: HA-FIG-A-L

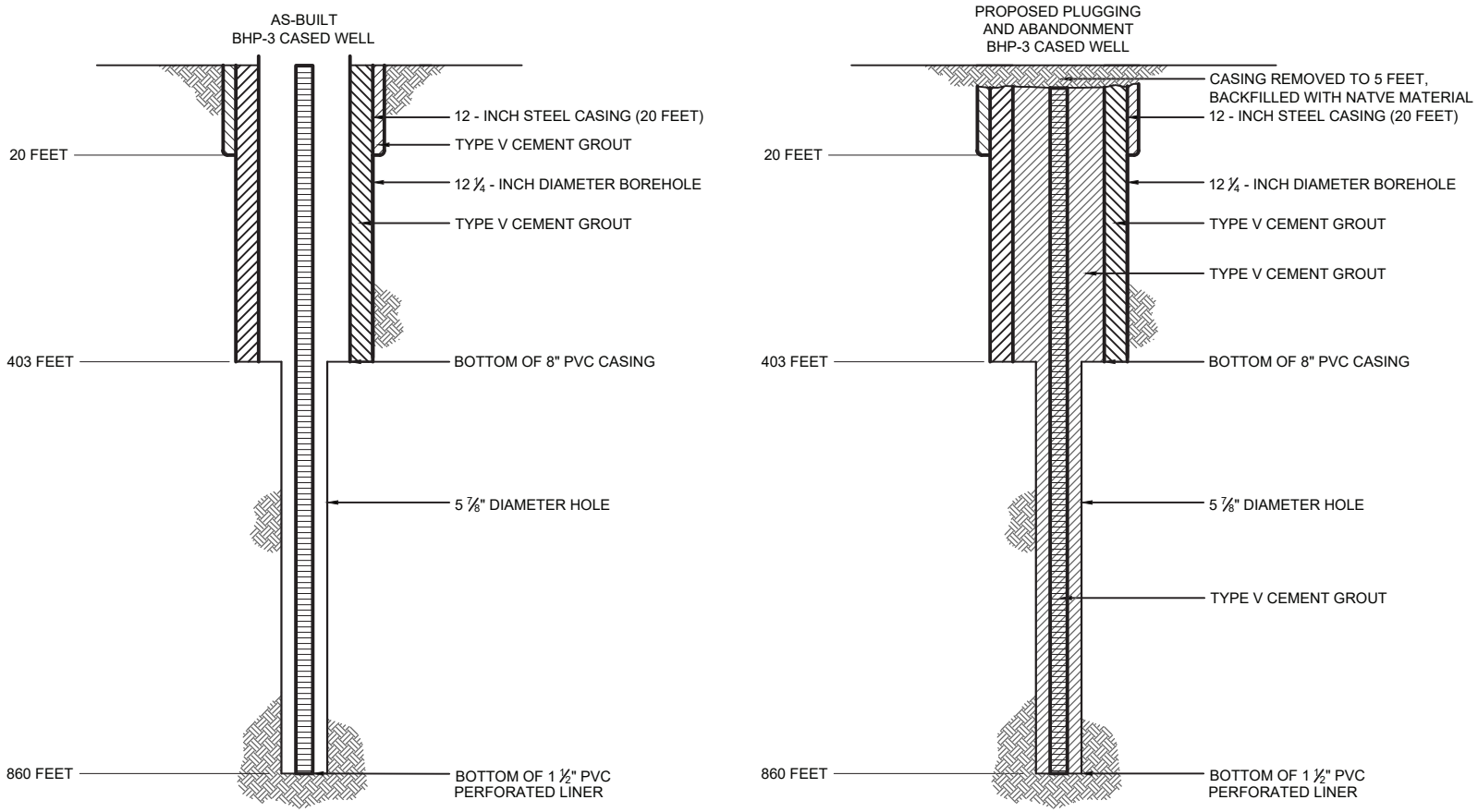

NOTE

WELL DESIGN DETAILS ARE BASED ON BHP RECORDS.

HALEY & ALDRICH

FLORENCE COPPER INC.
FLORENCE, ARIZONA

WELL BHP-3 SCHEMATIC DIAGRAM

SCALE: AS SHOWN
JULY 2014

FIGURE 1

OMB No. 2040-0042 Approval Expires 4/30/2022

United States Environmental Protection Agency

EPA

WELL REWORK RECORD, PLUGGING AND ABANDONMENT PLAN, OR PLUGGING AND ABANDONMENT AFFIDAVIT

Name and Address, Phone Number and/or Email of Permittee

Florence Copper Project
1575 W Hunt Hwy,
Florence, AZ 85132

Permit or EPA ID Number	API Number	Full Well Name
R9UIC-AZ3-FY11-1		BHP-4

State	County
Arizona	Pinal

Locate well in two directions from nearest lines of quarter section and drilling unit

Latitude 33.0470669

Longitude -111.4293602

Surface Location

SW **1/4 of** SE **1/4 of Section** 28 **Township** 4S **Range** 9E

440 **ft. from (N/S)** S **Line of quarter section**

385 **ft. from (E/W)** W **Line of quarter section.**

Well Class	Timing of Action (pick one)	Type of Action (pick one)
☐ Class I ☐ Class II ☑ Class III ☐ Class V	☑ Notice Prior to Work Date Expected to Commence March 2021 ☐ Report After Work Date Work Ended	☐ Well Rework ☑ Plugging and Abandonment ☐ Conversion to a Non-Injection Well

Provide a narrative description of the work planned to be performed, or that was performed. Use additional pages as necessary. See instructions.

A workover rig capable of performing the required abandonment operations at the required depths will be moved in and set up over the well. The well casing will be inspected to determine the depth to which the well remains open and if any obstructions are present in the casing; the presence and condition of any existing surface casing will also be documented. If necessary, the well casing will be cleaned out to the bottom of the deepest screen or perforation to enable placement of cement seals.
If surface casing is present, an attempt will be made to remove it. If removal of the surface casing is not feasible, it will be left in the hole and perforated as needed to allow an annular seal to be placed to a depth of at least 25 feet bgs. In areas of agricultural use, the surface casing will be cut at least 5 feet bgs and removed.
If the surface casing cannot be removed, it will be perforated from at least 20 feet below the bedrock-LBFU contact to at least 20 feet above the contact; from at least 20 feet below the base of the MFGU to at least 20 feet above the top of the MFGU; and from at least 25 feet bgs to 5 feet bgs.
A tremie pipe will be used to place Type V cement in the open well from the bottom of the well casing to the top of the well casing. Cement retainers, as described above, will be used to force cement grout into the annulus and behind perforated screen intervals, as necessary.
If the well casing has been obstructed, as much cement as possible will be placed from 100 feet below the LBFU-bedrock contact to the top of the casing.
The volume of Type V cement will be recorded and will not be less than the estimated volume of material required to fill each interval. All cement grout will consist of Type V cement, or equivalent approved in accordance with the UIC Permit.

Perforated Interval: 403 – 742 Feet

Certification

I certify under the penalty of law that I have personally examined and am familiar with the information submitted in this document and all attachments and that, based on my inquiry of those individuals immediately responsible for obtaining the information, I believe that the information is true, accurate, and complete. I am aware that there are significant penalties for submitting false information, including the possibliity of fine and imprisonment. (Ref. 40 CFR § 144.32)

Name and Official Title *(Please type or print)*	Signature	Date Signed
Dan Johnson, VP - General Manager		10/3/2019

INSTRUCTIONS FOR FORM 7520-19

This form replaces forms 7520-12 and 7520-14. Use this form only when work is planned or has occurred that affects the well's construction or operation as an injection well, including work on the casing, tubing or packer (or for shallow Class V wells, the subsurface fluid emplacement network). Use one form per injection well. While reports or other information developed by contractors or service companies may be attached, this form must be signed by a responsible entity as described at 40 CFR 144.32. Note: operators closing Class V wells should use Form 7520-17.

NAME, ADDRESS, PHONE AND/OR EMAIL OF PERMITTEE: Enter the name and street address, city/town, state, and ZIP code of the permittee. Also provide an email address (if available) and/or a phone number.

PERMIT OR EPA ID NUMBER: Enter the well identification number or permit number assigned to the well by the EPA or the permitting authority.

API NUMBER: Enter the number assigned by the local jurisdiction (usually a State Oil and Gas Agency) using the American Petroleum Institute standard numbering system.

FULL WELL NAME: Enter the full name of the well or project.

Enter the **STATE** and **COUNTY** where the well is located. For States that do not have counties, use the name of that State's equivalent jurisdiction at a more local level.

WELL LOCATION: Fill in the complete township, range, and section to the nearest quarter-quarter section. A township is north or south of the baseline, and a range is east or west of the principal meridian (e.g., T12N, R34W). Also include the distance, in feet, from the nearest north or south line and nearest east or west line of the quarter-section. Also, enter the **latitude** and **longitude** of the well in decimal degrees, to five or six places if possible; be sure to include a negative sign for the longitude of a well in the Western Hemisphere and a negative sign for the latitude of a well in the Southern Hemisphere.

Enter the **WELL CLASS,** i.e., the class of injection well as defined in 40 CFR 144.6.

TIMING OF THE ACTION: Check ***Notice prior to work*** if the activity has not yet occurred (i.e., is planned). Check ***Report after work*** if the activity described has already occurred. As appropriate, include the date the activity is expected to start or the date the activity was completed. (Note this may not be available, e.g., for a plugging plan submitted with a permit application.)

TYPE OF ACTION: Check the appropriate box to describe the kind of activity being reported. Check ***Well Rework*** for work that was/will be performed on the well after it has already been in operation as an injection well. Check ***Plugging and Abandonment*** to report on plans for or descriptions of final closure/plugging after use as an injection well. Check ***Conversion to a Non-Injection Well*** if the well is to be converted to something other than an injection well.

Provide a **NARRATIVE DESCRIPTION** of the work planned to be performed, or that was performed. The narrative should include a description of the main procedures planned or that occurred during the work activity. A service company report, daily report, or similar document may be attached if it includes all the requested information and is clear and legible.

For well reworks, include the following information: The reason for the well rework; depths of activity; type of activity; changes to injection well configuration, well casing, or cement behind casing; any plug added to the well and its depth; any newly drilled interval and its depth; method(s) to demonstrate that the well has mechanical integrity (as applicable); and any deviations from the approved rework plan (as applicable).

For a well plugging plan, include the following information: Reason for the well plugging; number of plugs placed, and their depths; materials used as plugs (e.g., cast iron bridge plug, cement, cement retainer); method to set plugs; and wait-on-cement times, if any. Also provide one or more cost estimates from an independent firm in the business of plugging and abandoning wells to plug the well as described in the plan.

For well plugging affidavit, include the following information: Reason for the well plugging; number of plugs placed, and their depths; materials used as plugs (e.g., cast iron bridge plug, cement, cement retainer); method to set plugs; wait-on-cement times, if any; and any deviations from the approved plugging plan (if applicable).

For conversion to a non-injection well, include the following information: Depths of activity; type of activity; changes to injection well configuration, well casing, or cement behind casing; any plug added to the well and its depth; any newly drilled interval and its depth; depths of new perforations; and method(s) to demonstrate that the well has mechanical integrity (as applicable).

For all of the above activities, include a well sketch depicting the work, results of well tests/logging performed, service company tickets, and any other available information demonstrating how the work was/is to be performed. Also, specify whether depths are below ground surface, relative to Kelly bushing, etc.

CERTIFICATION: This form must be signed and dated by either: a responsible corporate officer for a corporation, by a general partner for a partnership, by the proprietor of a sole proprietorship, or by a principal executive or ranking elected official for a public agency.

PAPERWORK REDUCTION ACT NOTICE: The public reporting and recordkeeping burden for this collection of information is estimated to average between 6.0 and 7.9 hours per response, depending on the injection well class. Burden means the total time, effort, or financial resource expended by persons to generate, maintain, retain, or disclose or provide information to or for a Federal Agency. This includes the time needed to review instructions; develop, acquire, install, and utilize technology and systems for the purposes of collecting, validating, and verifying information, processing and maintaining information, and disclosing and providing information; adjust the existing ways to comply with any previously applicable instructions and requirements; train personnel to be able to respond to the collection of information; search data sources; complete and review the collection of information; and, transmit or otherwise disclose the information. An agency may not conduct or sponsor, and a person is not required to respond to, a collection of information unless it displays a currently valid OMB control number. Send comments on the Agency's need for this information, the accuracy of the provided burden estimates, and any suggested methods for minimizing respondent burden, including the use of automated collection techniques to Director, Collection Strategies Division, U.S. Environmental Protection Agency (2822), 1200 Pennsylvania Ave., NW., Washington, D.C. 20460. Include the OMB control number in any correspondence. Do not send the completed forms to this address.

Drawing Name: G:\PROJECTS\CURIS RESOURCES\38706-CURIS FEASIBILITY\DRAWINGS\JULY 2014 UIC APP\BHP WELL SCHEMATICS\BHP-4.DWG
Operator Name: CANDREVA, LAUREN Plot Date: August 5, 2014 Drawing Layout: HA-FIG-A-L

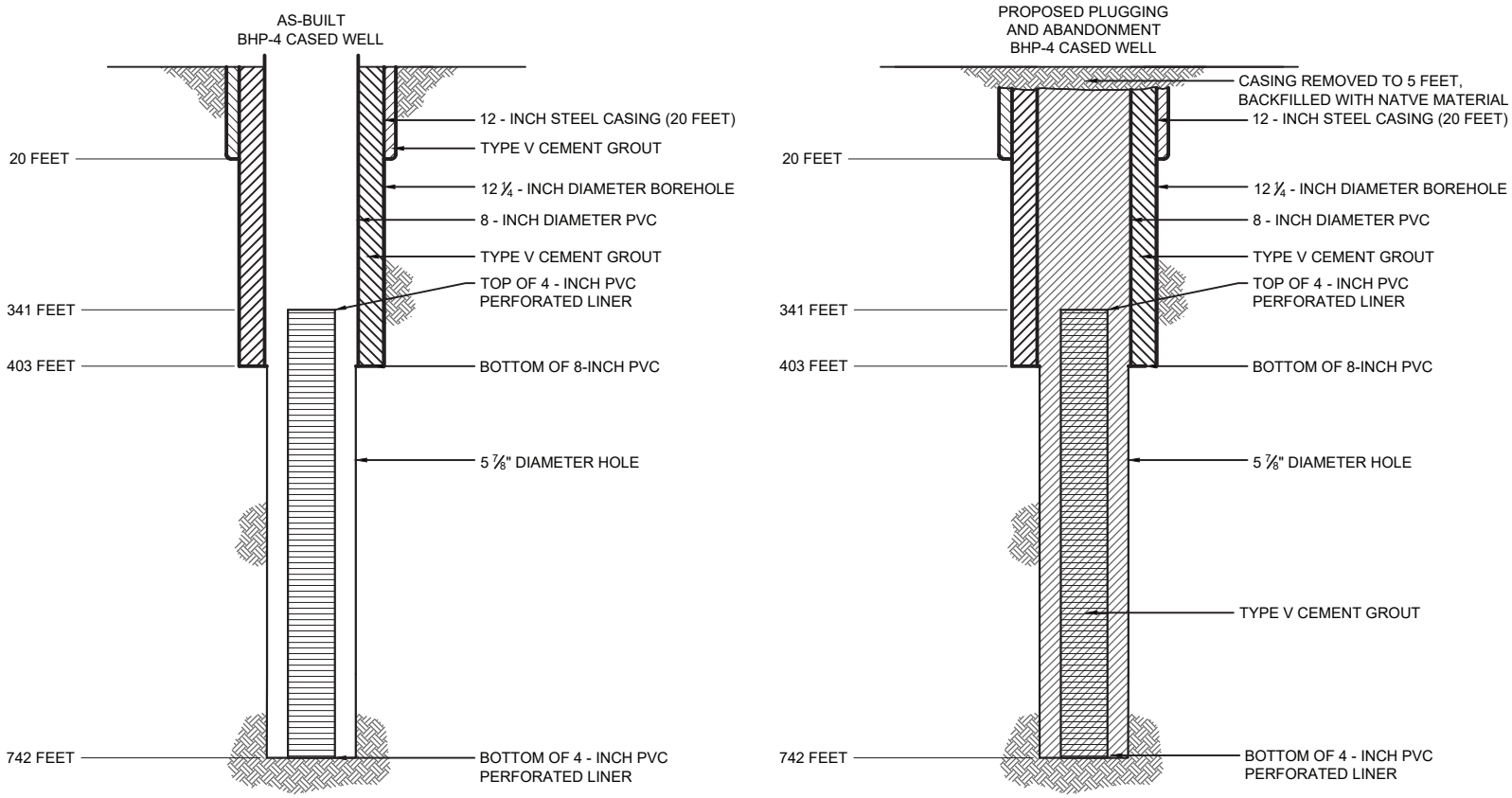

NOTE

WELL DESIGN DETAILS ARE BASED ON BHP RECORDS.

HALEY & ALDRICH

FLORENCE COPPER INC.
FLORENCE, ARIZONA

WELL BHP-4 SCHEMATIC DIAGRAM

SCALE: AS SHOWN
JULY 2014

FIGURE 1

OMB No. 2040-0042 Approval Expires 4/30/2022

United States Environmental Protection Agency

WELL REWORK RECORD, PLUGGING AND ABANDONMENT PLAN, OR PLUGGING AND ABANDONMENT AFFIDAVIT

Name and Address, Phone Number and/or Email of Permittee

Florence Copper Project
1575 W Hunt Hwy,
Florence, AZ 85132

Permit or EPA ID Number	API Number	Full Well Name
R9UIC-AZ3-FY11-1		BHP-5

State	County
Arizona	Pinal

Locate well in two directions from nearest lines of quarter section and drilling unit

Latitude 33.04679477

Longitude -111.4293552

Surface Location

SW **1/4 of** SE **1/4 of Section** 28 **Township** 4S **Range** 9E

340 **ft. from (N/S)** S **Line of quarter section**

385 **ft. from (E/W)** W **Line of quarter section.**

Well Class	Timing of Action (pick one)	Type of Action (pick one)
☐ Class I ☐ Class II ☑ Class III ☐ Class V	☑ Notice Prior to Work Date Expected to Commence March 2021 ☐ Report After Work Date Work Ended	☐ Well Rework ☑ Plugging and Abandonment ☐ Conversion to a Non-Injection Well

Provide a narrative description of the work planned to be performed, or that was performed. Use additional pages as necessary. See instructions.

A workover rig capable of performing the required abandonment operations at the required depths will be moved in and set up over the well. The well casing will be inspected to determine the depth to which the well remains open and if any obstructions are present in the casing; the presence and condition of any existing surface casing will also be documented. If necessary, the well casing will be cleaned out to the bottom of the deepest screen or perforation to enable placement of cement seals.
If surface casing is present, an attempt will be made to remove it. If removal of the surface casing is not feasible, it will be left in the hole and perforated as needed to allow an annular seal to be placed to a depth of at least 25 feet bgs. In areas of agricultural use, the surface casing will be cut at least 5 feet bgs and removed.
If the surface casing cannot be removed, it will be perforated from at least 20 feet below the bedrock-LBFU contact to at least 20 feet above the contact; from at least 20 feet below the base of the MFGU to at least 20 feet above the top of the MFGU; and from at least 25 feet bgs to 5 feet bgs.
A tremie pipe will be used to place Type V cement in the open well from the bottom of the well casing to the top of the well casing. Cement retainers, as described above, will be used to force cement grout into the annulus and behind perforated screen intervals, as necessary.
If the well casing has been obstructed, as much cement as possible will be placed from 100 feet below the LBFU-bedrock contact to the top of the casing.
The volume of Type V cement will be recorded and will not be less than the estimated volume of material required to fill each interval. All cement grout will consist of Type V cement, or equivalent approved in accordance with the UIC Permit.

Perforated Interval: 403 – 776 Feet

Certification

I certify under the penalty of law that I have personally examined and am familiar with the information submitted in this document and all attachments and that, based on my inquiry of those individuals immediately responsible for obtaining the information, I believe that the information is true, accurate, and complete. I am aware that there are significant penalties for submitting false information, including the possibliity of fine and imprisonment. (Ref. 40 CFR § 144.32)

Name and Official Title *(Please type or print)*	Signature	Date Signed
Dan Johnson, VP - General Manager		10/3/2019

INSTRUCTIONS FOR FORM 7520-19

This form replaces forms 7520-12 and 7520-14. Use this form only when work is planned or has occurred that affects the well's construction or operation as an injection well, including work on the casing, tubing or packer (or for shallow Class V wells, the subsurface fluid emplacement network). Use one form per injection well. While reports or other information developed by contractors or service companies may be attached, this form must be signed by a responsible entity as described at 40 CFR 144.32. Note: operators closing Class V wells should use Form 7520-17.

NAME, ADDRESS, PHONE AND/OR EMAIL OF PERMITTEE: Enter the name and street address, city/town, state, and ZIP code of the permittee. Also provide an email address (if available) and/or a phone number.

PERMIT OR EPA ID NUMBER: Enter the well identification number or permit number assigned to the well by the EPA or the permitting authority.

API NUMBER: Enter the number assigned by the local jurisdiction (usually a State Oil and Gas Agency) using the American Petroleum Institute standard numbering system.

FULL WELL NAME: Enter the full name of the well or project.

Enter the **STATE** and **COUNTY** where the well is located. For States that do not have counties, use the name of that State's equivalent jurisdiction at a more local level.

WELL LOCATION: Fill in the complete township, range, and section to the nearest quarter-quarter section. A township is north or south of the baseline, and a range is east or west of the principal meridian (e.g., T12N, R34W). Also include the distance, in feet, from the nearest north or south line and nearest east or west line of the quarter-section. Also, enter the **latitude** and **longitude** of the well in decimal degrees, to five or six places if possible; be sure to include a negative sign for the longitude of a well in the Western Hemisphere and a negative sign for the latitude of a well in the Southern Hemisphere.

Enter the **WELL CLASS,** i.e., the class of injection well as defined in 40 CFR 144.6.

TIMING OF THE ACTION: Check ***Notice prior to work*** if the activity has not yet occurred (i.e., is planned). Check ***Report after work*** if the activity described has already occurred. As appropriate, include the date the activity is expected to start or the date the activity was completed. (Note this may not be available, e.g., for a plugging plan submitted with a permit application.)

TYPE OF ACTION: Check the appropriate box to describe the kind of activity being reported. Check ***Well Rework*** for work that was/will be performed on the well after it has already been in operation as an injection well. Check ***Plugging and Abandonment*** to report on plans for or descriptions of final closure/plugging after use as an injection well. Check ***Conversion to a Non-Injection Well*** if the well is to be converted to something other than an injection well.

Provide a **NARRATIVE DESCRIPTION** of the work planned to be performed, or that was performed. The narrative should include a description of the main procedures planned or that occurred during the work activity. A service company report, daily report, or similar document may be attached if it includes all the requested information and is clear and legible.

For well reworks, include the following information: The reason for the well rework; depths of activity; type of activity; changes to injection well configuration, well casing, or cement behind casing; any plug added to the well and its depth; any newly drilled interval and its depth; method(s) to demonstrate that the well has mechanical integrity (as applicable); and any deviations from the approved rework plan (as applicable).

For a well plugging plan, include the following information: Reason for the well plugging; number of plugs placed, and their depths; materials used as plugs (e.g., cast iron bridge plug, cement, cement retainer); method to set plugs; and wait-on-cement times, if any. Also provide one or more cost estimates from an independent firm in the business of plugging and abandoning wells to plug the well as described in the plan.

For well plugging affidavit, include the following information: Reason for the well plugging; number of plugs placed, and their depths; materials used as plugs (e.g., cast iron bridge plug, cement, cement retainer); method to set plugs; wait-on-cement times, if any; and any deviations from the approved plugging plan (if applicable).

For conversion to a non-injection well, include the following information: Depths of activity; type of activity; changes to injection well configuration, well casing, or cement behind casing; any plug added to the well and its depth; any newly drilled interval and its depth; depths of new perforations; and method(s) to demonstrate that the well has mechanical integrity (as applicable).

For all of the above activities, include a well sketch depicting the work, results of well tests/logging performed, service company tickets, and any other available information demonstrating how the work was/is to be performed. Also, specify whether depths are below ground surface, relative to Kelly bushing, etc.

CERTIFICATION: This form must be signed and dated by either: a responsible corporate officer for a corporation, by a general partner for a partnership, by the proprietor of a sole proprietorship, or by a principal executive or ranking elected official for a public agency.

PAPERWORK REDUCTION ACT NOTICE: The public reporting and recordkeeping burden for this collection of information is estimated to average between 6.0 and 7.9 hours per response, depending on the injection well class. Burden means the total time, effort, or financial resource expended by persons to generate, maintain, retain, or disclose or provide information to or for a Federal Agency. This includes the time needed to review instructions; develop, acquire, install, and utilize technology and systems for the purposes of collecting, validating, and verifying information, processing and maintaining information, and disclosing and providing information; adjust the existing ways to comply with any previously applicable instructions and requirements; train personnel to be able to respond to the collection of information; search data sources; complete and review the collection of information; and, transmit or otherwise disclose the information. An agency may not conduct or sponsor, and a person is not required to respond to, a collection of information unless it displays a currently valid OMB control number. Send comments on the Agency's need for this information, the accuracy of the provided burden estimates, and any suggested methods for minimizing respondent burden, including the use of automated collection techniques to Director, Collection Strategies Division, U.S. Environmental Protection Agency (2822), 1200 Pennsylvania Ave., NW., Washington, D.C. 20460. Include the OMB control number in any correspondence. Do not send the completed forms to this address.

Drawing Name: G:\PROJECTS\CURIS RESOURCES\38706-CURIS FEASIBILITY\DRAWINGS\JULY 2014 UIC APP\BHP WELL SCHEMATICS\BHP-5.DWG
Operator Name: CANDREVA, LAUREN Plot Date: August 4, 2014 Drawing Layout: HA-FIG-A-L

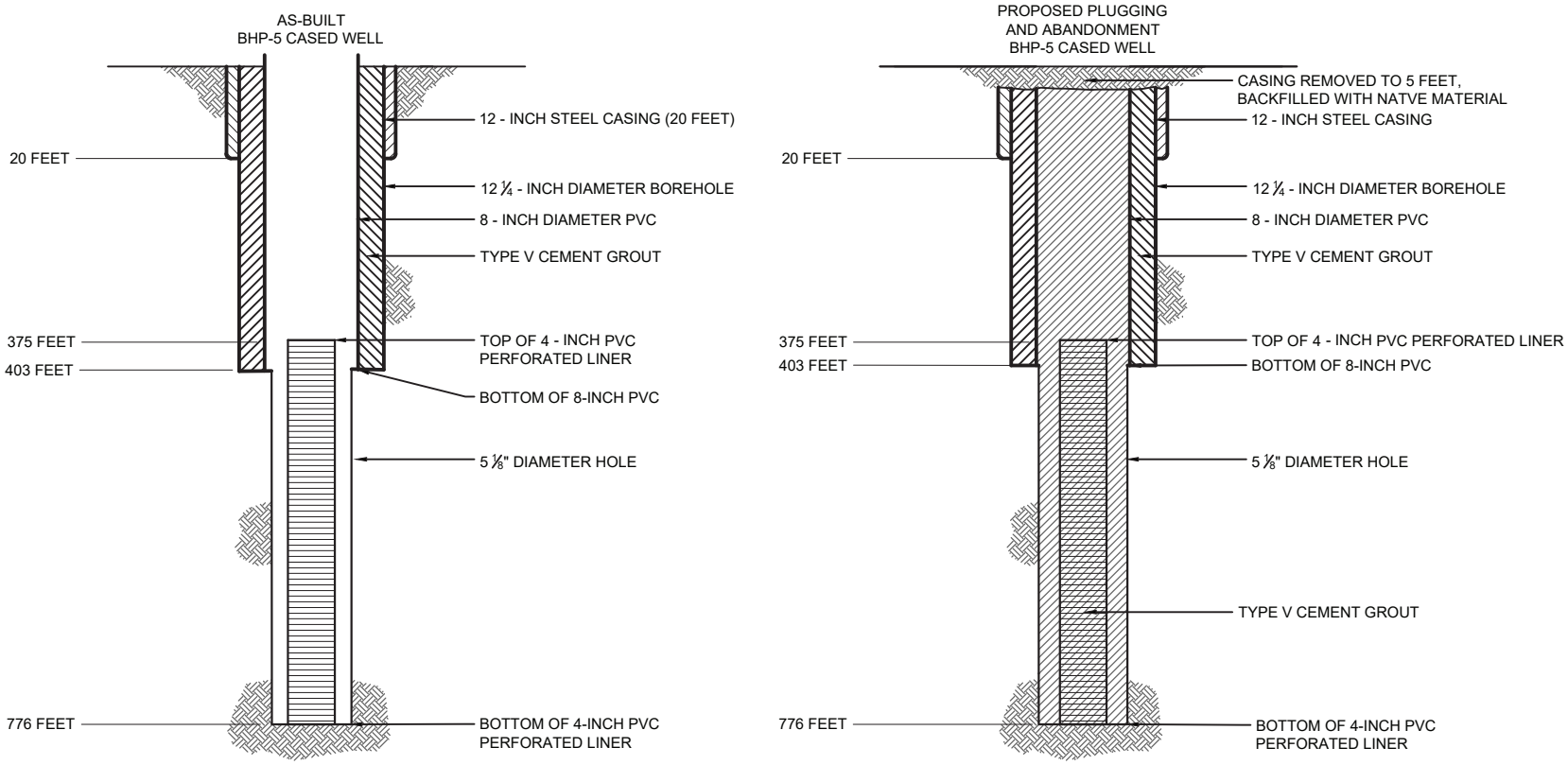

NOTE

WELL DESIGN DETAILS ARE BASED ON BHP RECORDS.

HALEY & ALDRICH

FLORENCE COPPER INC.
FLORENCE, ARIZONA

WELL BHP-5 SCHEMATIC DIAGRAM

SCALE: AS SHOWN
JULY 2014

FIGURE 1

OMB No. 2040-0042 Approval Expires 4/30/2022

United States Environmental Protection Agency

EPA

WELL REWORK RECORD, PLUGGING AND ABANDONMENT PLAN, OR PLUGGING AND ABANDONMENT AFFIDAVIT

Name and Address, Phone Number and/or Email of Permittee

Florence Copper Project
1575 W Hunt Hwy,
Florence, AZ 85132

Permit or EPA ID Number	API Number	Full Well Name
R9UIC-AZ3-FY11-1		BHP-6

State	County
Arizona	Pinal

Locate well in two directions from nearest lines of quarter section and drilling unit

Latitude 33.04691995

Longitude -111.4290347

Surface Location

SW **1/4 of** SE **1/4 of Section** 28 **Township** 4S **Range** 9E

385 **ft. from (N/S)** S **Line of quarter section**

485 **ft. from (E/W)** W **Line of quarter section.**

Well Class	Timing of Action (pick one)	Type of Action (pick one)
☐ Class I ☐ Class II ☑ Class III ☐ Class V	☑ Notice Prior to Work Date Expected to Commence March 2021 ☐ Report After Work Date Work Ended	☐ Well Rework ☑ Plugging and Abandonment ☐ Conversion to a Non-Injection Well

Provide a narrative description of the work planned to be performed, or that was performed. Use additional pages as necessary. See instructions.

A workover rig capable of performing the required abandonment operations at the required depths will be moved in and set up over the well. The well casing will be inspected to determine the depth to which the well remains open and if any obstructions are present in the casing; the presence and condition of any existing surface casing will also be documented. If necessary, the well casing will be cleaned out to the bottom of the deepest screen or perforation to enable placement of cement seals.
If surface casing is present, an attempt will be made to remove it. If removal of the surface casing is not feasible, it will be left in the hole and perforated as needed to allow an annular seal to be placed to a depth of at least 25 feet bgs. In areas of agricultural use, the surface casing will be cut at least 5 feet bgs and removed.
If the surface casing cannot be removed, it will be perforated from at least 20 feet below the bedrock-LBFU contact to at least 20 feet above the contact; from at least 20 feet below the base of the MFGU to at least 20 feet above the top of the MFGU; and from at least 25 feet bgs to 5 feet bgs.
A tremie pipe will be used to place Type V cement in the open well from the bottom of the well casing to the top of the well casing. Cement retainers, as described above, will be used to force cement grout into the annulus and behind perforated screen intervals, as necessary.
If the well casing has been obstructed, as much cement as possible will be placed from 100 feet below the LBFU-bedrock contact to the top of the casing.
The volume of Type V cement will be recorded and will not be less than the estimated volume of material required to fill each interval. All cement grout will consist of Type V cement, or equivalent approved in accordance with the UIC Permit.

Perforated Interval: 410 – 805 Feet

Certification

I certify under the penalty of law that I have personally examined and am familiar with the information submitted in this document and all attachments and that, based on my inquiry of those individuals immediately responsible for obtaining the information, I believe that the information is true, accurate, and complete. I am aware that there are significant penalties for submitting false information, including the possibliity of fine and imprisonment. (Ref. 40 CFR § 144.32)

Name and Official Title *(Please type or print)*	Signature	Date Signed
Dan Johnson, VP - General Manager		10/3/2019

INSTRUCTIONS FOR FORM 7520-19

This form replaces forms 7520-12 and 7520-14. Use this form only when work is planned or has occurred that affects the well's construction or operation as an injection well, including work on the casing, tubing or packer (or for shallow Class V wells, the subsurface fluid emplacement network). Use one form per injection well. While reports or other information developed by contractors or service companies may be attached, this form must be signed by a responsible entity as described at 40 CFR 144.32. Note: operators closing Class V wells should use Form 7520-17.

NAME, ADDRESS, PHONE AND/OR EMAIL OF PERMITTEE: Enter the name and street address, city/town, state, and ZIP code of the permittee. Also provide an email address (if available) and/or a phone number.

PERMIT OR EPA ID NUMBER: Enter the well identification number or permit number assigned to the well by the EPA or the permitting authority.

API NUMBER: Enter the number assigned by the local jurisdiction (usually a State Oil and Gas Agency) using the American Petroleum Institute standard numbering system.

FULL WELL NAME: Enter the full name of the well or project.

Enter the **STATE** and **COUNTY** where the well is located. For States that do not have counties, use the name of that State's equivalent jurisdiction at a more local level.

WELL LOCATION: Fill in the complete township, range, and section to the nearest quarter-quarter section. A township is north or south of the baseline, and a range is east or west of the principal meridian (e.g., T12N, R34W). Also include the distance, in feet, from the nearest north or south line and nearest east or west line of the quarter-section. Also, enter the **latitude** and **longitude** of the well in decimal degrees, to five or six places if possible; be sure to include a negative sign for the longitude of a well in the Western Hemisphere and a negative sign for the latitude of a well in the Southern Hemisphere.

Enter the **WELL CLASS,** i.e., the class of injection well as defined in 40 CFR 144.6.

TIMING OF THE ACTION: Check ***Notice prior to work*** if the activity has not yet occurred (i.e., is planned). Check ***Report after work*** if the activity described has already occurred. As appropriate, include the date the activity is expected to start or the date the activity was completed. (Note this may not be available, e.g., for a plugging plan submitted with a permit application.)

TYPE OF ACTION: Check the appropriate box to describe the kind of activity being reported. Check ***Well Rework*** for work that was/will be performed on the well after it has already been in operation as an injection well. Check ***Plugging and Abandonment*** to report on plans for or descriptions of final closure/plugging after use as an injection well. Check ***Conversion to a Non-Injection Well*** if the well is to be converted to something other than an injection well.

Provide a **NARRATIVE DESCRIPTION** of the work planned to be performed, or that was performed. The narrative should include a description of the main procedures planned or that occurred during the work activity. A service company report, daily report, or similar document may be attached if it includes all the requested information and is clear and legible.

For well reworks, include the following information: The reason for the well rework; depths of activity; type of activity; changes to injection well configuration, well casing, or cement behind casing; any plug added to the well and its depth; any newly drilled interval and its depth; method(s) to demonstrate that the well has mechanical integrity (as applicable); and any deviations from the approved rework plan (as applicable).

For a well plugging plan, include the following information: Reason for the well plugging; number of plugs placed, and their depths; materials used as plugs (e.g., cast iron bridge plug, cement, cement retainer); method to set plugs; and wait-on-cement times, if any. Also provide one or more cost estimates from an independent firm in the business of plugging and abandoning wells to plug the well as described in the plan.

For well plugging affidavit, include the following information: Reason for the well plugging; number of plugs placed, and their depths; materials used as plugs (e.g., cast iron bridge plug, cement, cement retainer); method to set plugs; wait-on-cement times, if any; and any deviations from the approved plugging plan (if applicable).

For conversion to a non-injection well, include the following information: Depths of activity; type of activity; changes to injection well configuration, well casing, or cement behind casing; any plug added to the well and its depth; any newly drilled interval and its depth; depths of new perforations; and method(s) to demonstrate that the well has mechanical integrity (as applicable).

For all of the above activities, include a well sketch depicting the work, results of well tests/logging performed, service company tickets, and any other available information demonstrating how the work was/is to be performed. Also, specify whether depths are below ground surface, relative to Kelly bushing, etc.

CERTIFICATION: This form must be signed and dated by either: a responsible corporate officer for a corporation, by a general partner for a partnership, by the proprietor of a sole proprietorship, or by a principal executive or ranking elected official for a public agency.

PAPERWORK REDUCTION ACT NOTICE: The public reporting and recordkeeping burden for this collection of information is estimated to average between 6.0 and 7.9 hours per response, depending on the injection well class. Burden means the total time, effort, or financial resource expended by persons to generate, maintain, retain, or disclose or provide information to or for a Federal Agency. This includes the time needed to review instructions; develop, acquire, install, and utilize technology and systems for the purposes of collecting, validating, and verifying information, processing and maintaining information, and disclosing and providing information; adjust the existing ways to comply with any previously applicable instructions and requirements; train personnel to be able to respond to the collection of information; search data sources; complete and review the collection of information; and, transmit or otherwise disclose the information. An agency may not conduct or sponsor, and a person is not required to respond to, a collection of information unless it displays a currently valid OMB control number. Send comments on the Agency's need for this information, the accuracy of the provided burden estimates, and any suggested methods for minimizing respondent burden, including the use of automated collection techniques to Director, Collection Strategies Division, U.S. Environmental Protection Agency (2822), 1200 Pennsylvania Ave., NW., Washington, D.C. 20460. Include the OMB control number in any correspondence. Do not send the completed forms to this address.

Drawing Name: G:\PROJECTS\CURIS RESOURCES\38706-CURIS FEASIBILITY\DRAWINGS\JULY 2014 UIC APP\BHP WELL SCHEMATICS\BHP-6.DWG
Operator Name: CANDREVA, LAUREN Plot Date: August 5, 2014 Drawing Layout: HA-FIG-A-L

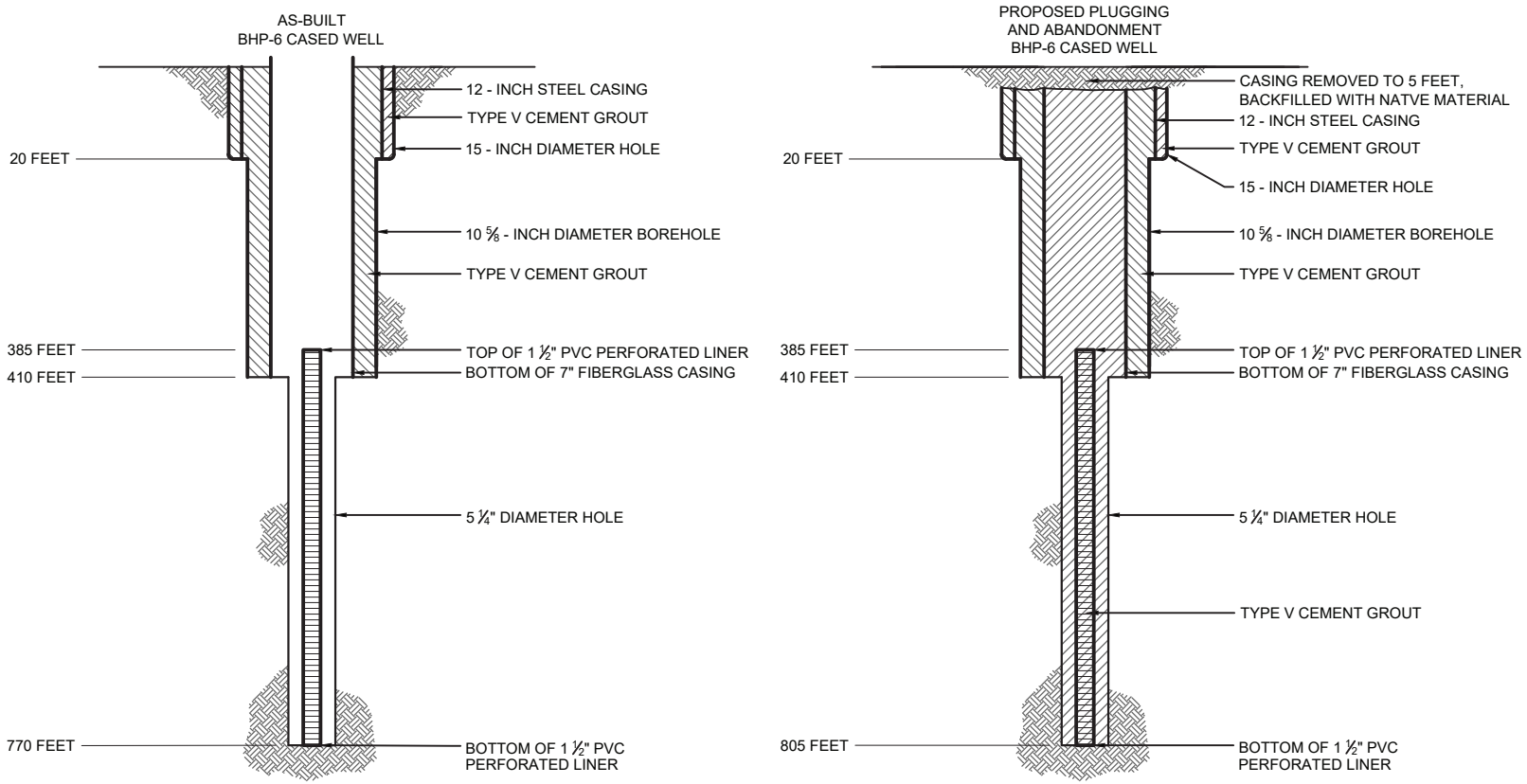

NOTE

WELL DESIGN DETAILS ARE BASED ON BHP RECORDS.

HALEY & ALDRICH

FLORENCE COPPER INC.
FLORENCE, ARIZONA

WELL BHP-6 SCHEMATIC DIAGRAM

SCALE: AS SHOWN
JULY 2014

FIGURE 1

OMB No. 2040-0042 Approval Expires 4/30/2022

United States Environmental Protection Agency

WELL REWORK RECORD, PLUGGING AND ABANDONMENT PLAN, OR PLUGGING AND ABANDONMENT AFFIDAVIT

Name and Address, Phone Number and/or Email of Permittee

Florence Copper Project
1575 W Hunt Hwy,
Florence, AZ 85132

Permit or EPA ID Number	API Number	Full Well Name
R9UIC-AZ3-FY11-1		BHP-7

State	County
Arizona	Pinal

Locate well in two directions from nearest lines of quarter section and drilling unit

Latitude 33.04706074

Longitude -111.4291906

Surface Location

SW **1/4 of** SE **1/4 of Section** 28 **Township** 4S **Range** 9E

440 **ft. from (N/S)** S **Line of quarter section**

435 **ft. from (E/W)** W **Line of quarter section.**

Well Class	Timing of Action (pick one)	Type of Action (pick one)
☐ Class I ☐ Class II ☑ Class III ☐ Class V	☑ Notice Prior to Work Date Expected to Commence March 2021 ☐ Report After Work Date Work Ended	☐ Well Rework ☑ Plugging and Abandonment ☐ Conversion to a Non-Injection Well

Provide a narrative description of the work planned to be performed, or that was performed. Use additional pages as necessary. See instructions.

A workover rig capable of performing the required abandonment operations at the required depths will be moved in and set up over the well. The well casing will be inspected to determine the depth to which the well remains open and if any obstructions are present in the casing; the presence and condition of any existing surface casing will also be documented. If necessary, the well casing will be cleaned out to the bottom of the deepest screen or perforation to enable placement of cement seals.
If surface casing is present, an attempt will be made to remove it. If removal of the surface casing is not feasible, it will be left in the hole and perforated as needed to allow an annular seal to be placed to a depth of at least 25 feet bgs. In areas of agricultural use, the surface casing will be cut at least 5 feet bgs and removed.
If the surface casing cannot be removed, it will be perforated from at least 20 feet below the bedrock-LBFU contact to at least 20 feet above the contact; from at least 20 feet below the base of the MFGU to at least 20 feet above the top of the MFGU; and from at least 25 feet bgs to 5 feet bgs.
A tremie pipe will be used to place Type V cement in the open well from the bottom of the well casing to the top of the well casing. Cement retainers, as described above, will be used to force cement grout into the annulus and behind perforated screen intervals, as necessary.
If the well casing has been obstructed, as much cement as possible will be placed from 100 feet below the LBFU-bedrock contact to the top of the casing.
The volume of Type V cement will be recorded and will not be less than the estimated volume of material required to fill each interval. All cement grout will consist of Type V cement, or equivalent approved in accordance with the UIC Permit.

Perforated Interval: 410 – 760 Feet

Certification

I certify under the penalty of law that I have personally examined and am familiar with the information submitted in this document and all attachments and that, based on my inquiry of those individuals immediately responsible for obtaining the information, I believe that the information is true, accurate, and complete. I am aware that there are significant penalties for submitting false information, including the possibliity of fine and imprisonment. (Ref. 40 CFR § 144.32)

Name and Official Title *(Please type or print)*	Signature	Date Signed
Dan Johnson, VP - General Manager		10/3/2019

INSTRUCTIONS FOR FORM 7520-19

This form replaces forms 7520-12 and 7520-14. Use this form only when work is planned or has occurred that affects the well's construction or operation as an injection well, including work on the casing, tubing or packer (or for shallow Class V wells, the subsurface fluid emplacement network). Use one form per injection well. While reports or other information developed by contractors or service companies may be attached, this form must be signed by a responsible entity as described at 40 CFR 144.32. Note: operators closing Class V wells should use Form 7520-17.

NAME, ADDRESS, PHONE AND/OR EMAIL OF PERMITTEE: Enter the name and street address, city/town, state, and ZIP code of the permittee. Also provide an email address (if available) and/or a phone number.

PERMIT OR EPA ID NUMBER: Enter the well identification number or permit number assigned to the well by the EPA or the permitting authority.

API NUMBER: Enter the number assigned by the local jurisdiction (usually a State Oil and Gas Agency) using the American Petroleum Institute standard numbering system.

FULL WELL NAME: Enter the full name of the well or project.

Enter the **STATE** and **COUNTY** where the well is located. For States that do not have counties, use the name of that State's equivalent jurisdiction at a more local level.

WELL LOCATION: Fill in the complete township, range, and section to the nearest quarter-quarter section. A township is north or south of the baseline, and a range is east or west of the principal meridian (e.g., T12N, R34W). Also include the distance, in feet, from the nearest north or south line and nearest east or west line of the quarter-section. Also, enter the **latitude** and **longitude** of the well in decimal degrees, to five or six places if possible; be sure to include a negative sign for the longitude of a well in the Western Hemisphere and a negative sign for the latitude of a well in the Southern Hemisphere.

Enter the **WELL CLASS,** i.e., the class of injection well as defined in 40 CFR 144.6.

TIMING OF THE ACTION: Check ***Notice prior to work*** if the activity has not yet occurred (i.e., is planned). Check ***Report after work*** if the activity described has already occurred. As appropriate, include the date the activity is expected to start or the date the activity was completed. (Note this may not be available, e.g., for a plugging plan submitted with a permit application.)

TYPE OF ACTION: Check the appropriate box to describe the kind of activity being reported. Check ***Well Rework*** for work that was/will be performed on the well after it has already been in operation as an injection well. Check ***Plugging and Abandonment*** to report on plans for or descriptions of final closure/plugging after use as an injection well. Check ***Conversion to a Non-Injection Well*** if the well is to be converted to something other than an injection well.

Provide a **NARRATIVE DESCRIPTION** of the work planned to be performed, or that was performed. The narrative should include a description of the main procedures planned or that occurred during the work activity. A service company report, daily report, or similar document may be attached if it includes all the requested information and is clear and legible.

For well reworks, include the following information: The reason for the well rework; depths of activity; type of activity; changes to injection well configuration, well casing, or cement behind casing; any plug added to the well and its depth; any newly drilled interval and its depth; method(s) to demonstrate that the well has mechanical integrity (as applicable); and any deviations from the approved rework plan (as applicable).

For a well plugging plan, include the following information: Reason for the well plugging; number of plugs placed, and their depths; materials used as plugs (e.g., cast iron bridge plug, cement, cement retainer); method to set plugs; and wait-on-cement times, if any. Also provide one or more cost estimates from an independent firm in the business of plugging and abandoning wells to plug the well as described in the plan.

For well plugging affidavit, include the following information: Reason for the well plugging; number of plugs placed, and their depths; materials used as plugs (e.g., cast iron bridge plug, cement, cement retainer); method to set plugs; wait-on-cement times, if any; and any deviations from the approved plugging plan (if applicable).

For conversion to a non-injection well, include the following information: Depths of activity; type of activity; changes to injection well configuration, well casing, or cement behind casing; any plug added to the well and its depth; any newly drilled interval and its depth; depths of new perforations; and method(s) to demonstrate that the well has mechanical integrity (as applicable).

For all of the above activities, include a well sketch depicting the work, results of well tests/logging performed, service company tickets, and any other available information demonstrating how the work was/is to be performed. Also, specify whether depths are below ground surface, relative to Kelly bushing, etc.

CERTIFICATION: This form must be signed and dated by either: a responsible corporate officer for a corporation, by a general partner for a partnership, by the proprietor of a sole proprietorship, or by a principal executive or ranking elected official for a public agency.

PAPERWORK REDUCTION ACT NOTICE: The public reporting and recordkeeping burden for this collection of information is estimated to average between 6.0 and 7.9 hours per response, depending on the injection well class. Burden means the total time, effort, or financial resource expended by persons to generate, maintain, retain, or disclose or provide information to or for a Federal Agency. This includes the time needed to review instructions; develop, acquire, install, and utilize technology and systems for the purposes of collecting, validating, and verifying information, processing and maintaining information, and disclosing and providing information; adjust the existing ways to comply with any previously applicable instructions and requirements; train personnel to be able to respond to the collection of information; search data sources; complete and review the collection of information; and, transmit or otherwise disclose the information. An agency may not conduct or sponsor, and a person is not required to respond to, a collection of information unless it displays a currently valid OMB control number. Send comments on the Agency's need for this information, the accuracy of the provided burden estimates, and any suggested methods for minimizing respondent burden, including the use of automated collection techniques to Director, Collection Strategies Division, U.S. Environmental Protection Agency (2822), 1200 Pennsylvania Ave., NW., Washington, D.C. 20460. Include the OMB control number in any correspondence. Do not send the completed forms to this address.

Drawing Name: G:\PROJECTS\CURIS RESOURCES\38706-CURIS FEASIBILITY\DRAWINGS\JULY 2014 UIC APP\BHP WELL SCHEMATICS\BHP-7.DWG
Operator Name: CANDREVA, LAUREN Plot Date: August 5, 2014 Drawing Layout: HA-FIG-A-L

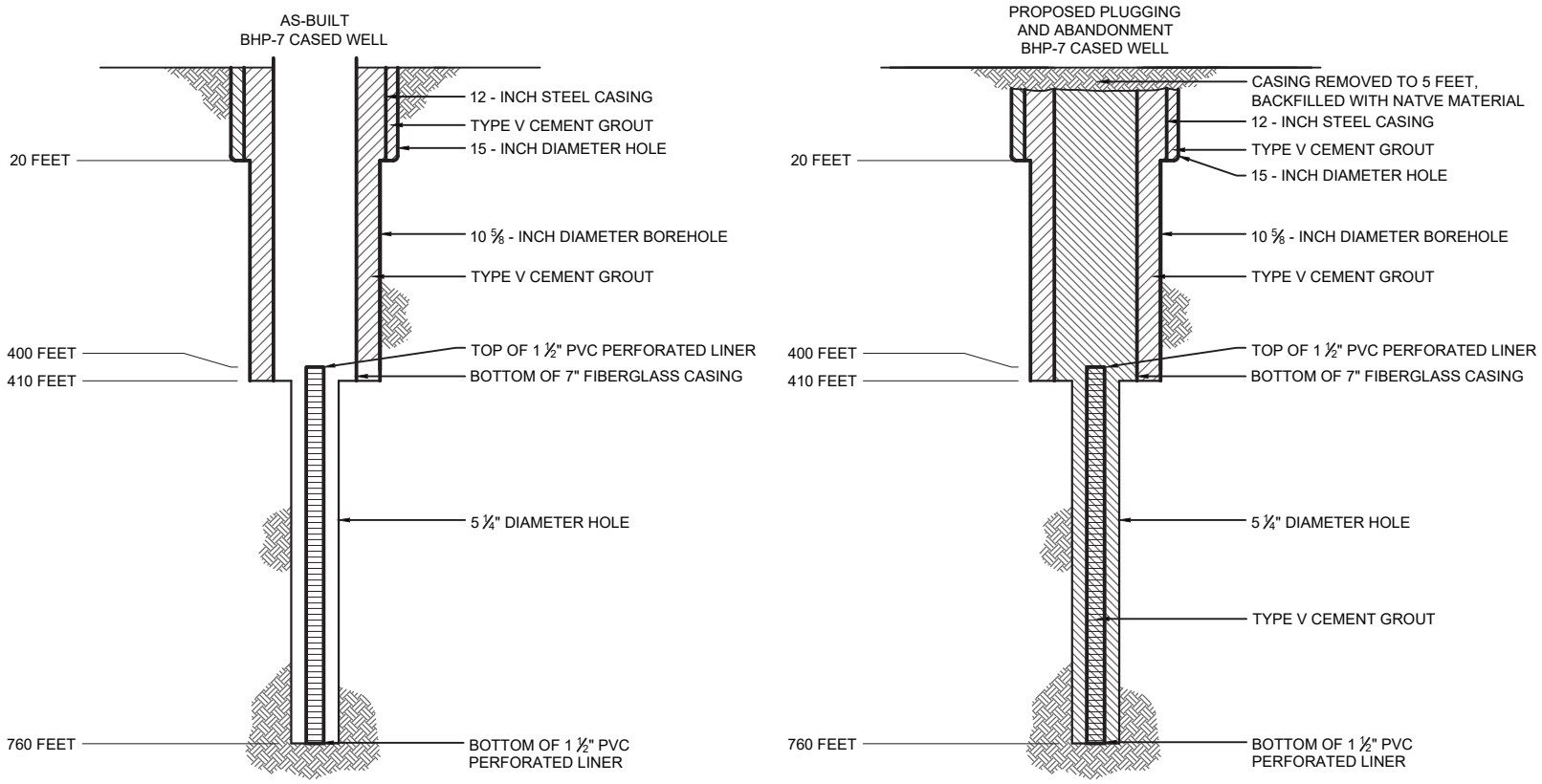

NOTE

WELL DESIGN DETAILS ARE BASED ON BHP RECORDS.

HALEY & ALDRICH

FLORENCE COPPER INC.
FLORENCE, ARIZONA

WELL BHP-7 SCHEMATIC DIAGRAM

SCALE: AS SHOWN
JULY 2014

FIGURE 1

OMB No. 2040-0042 Approval Expires 4/30/2022

United States Environmental Protection Agency

WELL REWORK RECORD, PLUGGING AND ABANDONMENT PLAN, OR PLUGGING AND ABANDONMENT AFFIDAVIT

Name and Address, Phone Number and/or Email of Permittee

Florence Copper Project
1575 W Hunt Hwy,
Florence, AZ 85132

Permit or EPA ID Number	API Number	Full Well Name
R9UIC-AZ3-FY11-1		BHP-8

State	County
Arizona	Pinal

Locate well in two directions from nearest lines of quarter section and drilling unit

Latitude 33.04692396

Longitude -111.4293578

Surface Location

SW **1/4 of** SE **1/4 of Section** 28 **Township** 4S **Range** 9E

385 **ft. from (N/S)** S **Line of quarter section**

385 **ft. from (E/W)** W **Line of quarter section.**

Well Class	Timing of Action (pick one)	Type of Action (pick one)
☐ Class I ☐ Class II ☑ Class III ☐ Class V	☑ Notice Prior to Work Date Expected to Commence March 2021 ☐ Report After Work Date Work Ended	☐ Well Rework ☑ Plugging and Abandonment ☐ Conversion to a Non-Injection Well

Provide a narrative description of the work planned to be performed, or that was performed. Use additional pages as necessary. See instructions.

A workover rig capable of performing the required abandonment operations at the required depths will be moved in and set up over the well. The well casing will be inspected to determine the depth to which the well remains open and if any obstructions are present in the casing; the presence and condition of any existing surface casing will also be documented. If necessary, the well casing will be cleaned out to the bottom of the deepest screen or perforation to enable placement of cement seals.
If surface casing is present, an attempt will be made to remove it. If removal of the surface casing is not feasible, it will be left in the hole and perforated as needed to allow an annular seal to be placed to a depth of at least 25 feet bgs. In areas of agricultural use, the surface casing will be cut at least 5 feet bgs and removed.
If the surface casing cannot be removed, it will be perforated from at least 20 feet below the bedrock-LBFU contact to at least 20 feet above the contact; from at least 20 feet below the base of the MFGU to at least 20 feet above the top of the MFGU; and from at least 25 feet bgs to 5 feet bgs.
A tremie pipe will be used to place Type V cement in the open well from the bottom of the well casing to the top of the well casing. Cement retainers, as described above, will be used to force cement grout into the annulus and behind perforated screen intervals, as necessary.
If the well casing has been obstructed, as much cement as possible will be placed from 100 feet below the LBFU-bedrock contact to the top of the casing.
The volume of Type V cement will be recorded and will not be less than the estimated volume of material required to fill each interval. All cement grout will consist of Type V cement, or equivalent approved in accordance with the UIC Permit.

Perforated Interval: 410 – 780 Feet

Certification

I certify under the penalty of law that I have personally examined and am familiar with the information submitted in this document and all attachments and that, based on my inquiry of those individuals immediately responsible for obtaining the information, I believe that the information is true, accurate, and complete. I am aware that there are significant penalties for submitting false information, including the possibliity of fine and imprisonment. (Ref. 40 CFR § 144.32)

Name and Official Title *(Please type or print)*	Signature	Date Signed
Dan Johnson, VP - General Manager		10/3/2019

INSTRUCTIONS FOR FORM 7520-19

This form replaces forms 7520-12 and 7520-14. Use this form only when work is planned or has occurred that affects the well's construction or operation as an injection well, including work on the casing, tubing or packer (or for shallow Class V wells, the subsurface fluid emplacement network). Use one form per injection well. While reports or other information developed by contractors or service companies may be attached, this form must be signed by a responsible entity as described at 40 CFR 144.32. Note: operators closing Class V wells should use Form 7520-17.

NAME, ADDRESS, PHONE AND/OR EMAIL OF PERMITTEE: Enter the name and street address, city/town, state, and ZIP code of the permittee. Also provide an email address (if available) and/or a phone number.

PERMIT OR EPA ID NUMBER: Enter the well identification number or permit number assigned to the well by the EPA or the permitting authority.

API NUMBER: Enter the number assigned by the local jurisdiction (usually a State Oil and Gas Agency) using the American Petroleum Institute standard numbering system.

FULL WELL NAME: Enter the full name of the well or project.

Enter the **STATE** and **COUNTY** where the well is located. For States that do not have counties, use the name of that State's equivalent jurisdiction at a more local level.

WELL LOCATION: Fill in the complete township, range, and section to the nearest quarter-quarter section. A township is north or south of the baseline, and a range is east or west of the principal meridian (e.g., T12N, R34W). Also include the distance, in feet, from the nearest north or south line and nearest east or west line of the quarter-section. Also, enter the **latitude** and **longitude** of the well in decimal degrees, to five or six places if possible; be sure to include a negative sign for the longitude of a well in the Western Hemisphere and a negative sign for the latitude of a well in the Southern Hemisphere.

Enter the **WELL CLASS,** i.e., the class of injection well as defined in 40 CFR 144.6.

TIMING OF THE ACTION: Check ***Notice prior to work*** if the activity has not yet occurred (i.e., is planned). Check ***Report after work*** if the activity described has already occurred. As appropriate, include the date the activity is expected to start or the date the activity was completed. (Note this may not be available, e.g., for a plugging plan submitted with a permit application.)

TYPE OF ACTION: Check the appropriate box to describe the kind of activity being reported. Check ***Well Rework*** for work that was/will be performed on the well after it has already been in operation as an injection well. Check ***Plugging and Abandonment*** to report on plans for or descriptions of final closure/plugging after use as an injection well. Check ***Conversion to a Non-Injection Well*** if the well is to be converted to something other than an injection well.

Provide a **NARRATIVE DESCRIPTION** of the work planned to be performed, or that was performed. The narrative should include a description of the main procedures planned or that occurred during the work activity. A service company report, daily report, or similar document may be attached if it includes all the requested information and is clear and legible.

For well reworks, include the following information: The reason for the well rework; depths of activity; type of activity; changes to injection well configuration, well casing, or cement behind casing; any plug added to the well and its depth; any newly drilled interval and its depth; method(s) to demonstrate that the well has mechanical integrity (as applicable); and any deviations from the approved rework plan (as applicable).

For a well plugging plan, include the following information: Reason for the well plugging; number of plugs placed, and their depths; materials used as plugs (e.g., cast iron bridge plug, cement, cement retainer); method to set plugs; and wait-on-cement times, if any. Also provide one or more cost estimates from an independent firm in the business of plugging and abandoning wells to plug the well as described in the plan.

For well plugging affidavit, include the following information: Reason for the well plugging; number of plugs placed, and their depths; materials used as plugs (e.g., cast iron bridge plug, cement, cement retainer); method to set plugs; wait-on-cement times, if any; and any deviations from the approved plugging plan (if applicable).

For conversion to a non-injection well, include the following information: Depths of activity; type of activity; changes to injection well configuration, well casing, or cement behind casing; any plug added to the well and its depth; any newly drilled interval and its depth; depths of new perforations; and method(s) to demonstrate that the well has mechanical integrity (as applicable).

For all of the above activities, include a well sketch depicting the work, results of well tests/logging performed, service company tickets, and any other available information demonstrating how the work was/is to be performed. Also, specify whether depths are below ground surface, relative to Kelly bushing, etc.

CERTIFICATION: This form must be signed and dated by either: a responsible corporate officer for a corporation, by a general partner for a partnership, by the proprietor of a sole proprietorship, or by a principal executive or ranking elected official for a public agency.

PAPERWORK REDUCTION ACT NOTICE: The public reporting and recordkeeping burden for this collection of information is estimated to average between 6.0 and 7.9 hours per response, depending on the injection well class. Burden means the total time, effort, or financial resource expended by persons to generate, maintain, retain, or disclose or provide information to or for a Federal Agency. This includes the time needed to review instructions; develop, acquire, install, and utilize technology and systems for the purposes of collecting, validating, and verifying information, processing and maintaining information, and disclosing and providing information; adjust the existing ways to comply with any previously applicable instructions and requirements; train personnel to be able to respond to the collection of information; search data sources; complete and review the collection of information; and, transmit or otherwise disclose the information. An agency may not conduct or sponsor, and a person is not required to respond to, a collection of information unless it displays a currently valid OMB control number. Send comments on the Agency's need for this information, the accuracy of the provided burden estimates, and any suggested methods for minimizing respondent burden, including the use of automated collection techniques to Director, Collection Strategies Division, U.S. Environmental Protection Agency (2822), 1200 Pennsylvania Ave., NW., Washington, D.C. 20460. Include the OMB control number in any correspondence. Do not send the completed forms to this address.

Drawing Name: G:\PROJECTS\CURIS RESOURCES\38706-CURIS FEASIBILITY\DRAWINGS\JULY 2014 UIC APP\BHP WELL SCHEMATICS\BHP-8.DWG
Operator Name: CANDREVA, LAUREN Plot Date: August 5, 2014 Drawing Layout: HA-FIG-A-L

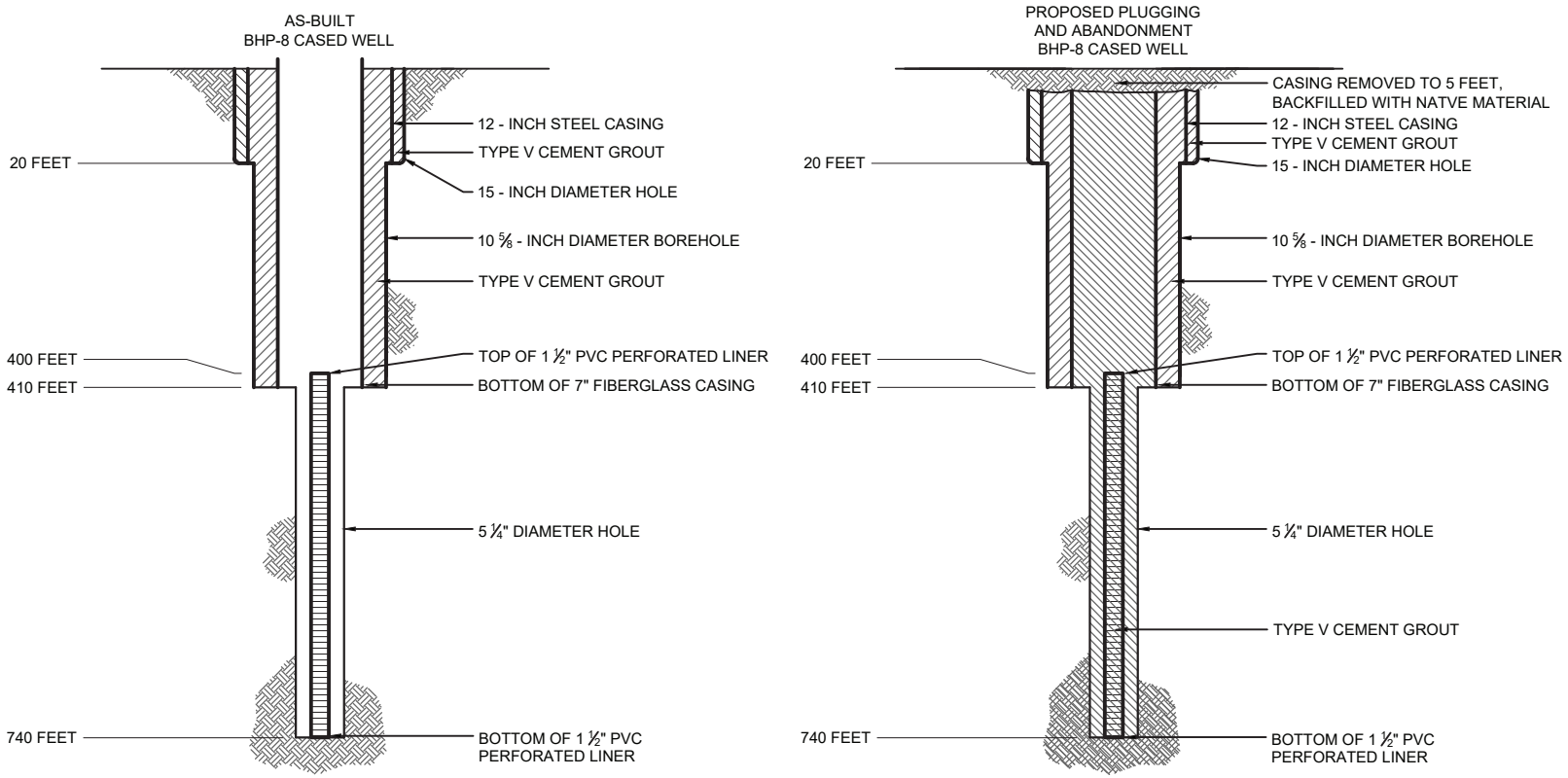

NOTE

WELL DESIGN DETAILS ARE BASED ON BHP RECORDS.

HALEY & ALDRICH

FLORENCE COPPER INC.
FLORENCE, ARIZONA

WELL BHP-8 SCHEMATIC DIAGRAM

SCALE: AS SHOWN
JULY 2014

FIGURE 1

OMB No. 2040-0042 Approval Expires 4/30/2022

United States Environmental Protection Agency

EPA

WELL REWORK RECORD, PLUGGING AND ABANDONMENT PLAN, OR PLUGGING AND ABANDONMENT AFFIDAVIT

Name and Address, Phone Number and/or Email of Permittee

Florence Copper Project
1575 W Hunt Hwy,
Florence, AZ 85132

Permit or EPA ID Number	API Number	Full Well Name
R9UIC-AZ3-FY11-1		BHP-9

State	County
Arizona	Pinal

Locate well in two directions from nearest lines of quarter section and drilling unit

Latitude 33.04678591

Longitude -111.4291986

Surface Location

SW **1/4 of** SE **1/4 of Section** 28 **Township** 4S **Range** 9E

335 **ft. from (N/S)** S **Line of quarter section**

435 **ft. from (E/W)** W **Line of quarter section.**

Well Class	Timing of Action (pick one)	Type of Action (pick one)
☐ Class I ☐ Class II ☑ Class III ☐ Class V	☑ Notice Prior to Work Date Expected to Commence March 2021 ☐ Report After Work Date Work Ended	☐ Well Rework ☑ Plugging and Abandonment ☐ Conversion to a Non-Injection Well

Provide a narrative description of the work planned to be performed, or that was performed. Use additional pages as necessary. See instructions.

A workover rig capable of performing the required abandonment operations at the required depths will be moved in and set up over the well. The well casing will be inspected to determine the depth to which the well remains open and if any obstructions are present in the casing; the presence and condition of any existing surface casing will also be documented. If necessary, the well casing will be cleaned out to the bottom of the deepest screen or perforation to enable placement of cement seals.
If surface casing is present, an attempt will be made to remove it. If removal of the surface casing is not feasible, it will be left in the hole and perforated as needed to allow an annular seal to be placed to a depth of at least 25 feet bgs. In areas of agricultural use, the surface casing will be cut at least 5 feet bgs and removed.
If the surface casing cannot be removed, it will be perforated from at least 20 feet below the bedrock-LBFU contact to at least 20 feet above the contact; from at least 20 feet below the base of the MFGU to at least 20 feet above the top of the MFGU; and from at least 25 feet bgs to 5 feet bgs.
A tremie pipe will be used to place Type V cement in the open well from the bottom of the well casing to the top of the well casing. Cement retainers, as described above, will be used to force cement grout into the annulus and behind perforated screen intervals, as necessary.
If the well casing has been obstructed, as much cement as possible will be placed from 100 feet below the LBFU-bedrock contact to the top of the casing.
The volume of Type V cement will be recorded and will not be less than the estimated volume of material required to fill each interval. All cement grout will consist of Type V cement, or equivalent approved in accordance with the UIC Permit.

Perforated Interval: 410 – 840 Feet

Certification

I certify under the penalty of law that I have personally examined and am familiar with the information submitted in this document and all attachments and that, based on my inquiry of those individuals immediately responsible for obtaining the information, I believe that the information is true, accurate, and complete. I am aware that there are significant penalties for submitting false information, including the possibliity of fine and imprisonment. (Ref. 40 CFR § 144.32)

Name and Official Title *(Please type or print)*	Signature	Date Signed
Dan Johnson, VP - General Manager		10/3/2019

INSTRUCTIONS FOR FORM 7520-19

This form replaces forms 7520-12 and 7520-14. Use this form only when work is planned or has occurred that affects the well's construction or operation as an injection well, including work on the casing, tubing or packer (or for shallow Class V wells, the subsurface fluid emplacement network). Use one form per injection well. While reports or other information developed by contractors or service companies may be attached, this form must be signed by a responsible entity as described at 40 CFR 144.32. Note: operators closing Class V wells should use Form 7520-17.

NAME, ADDRESS, PHONE AND/OR EMAIL OF PERMITTEE: Enter the name and street address, city/town, state, and ZIP code of the permittee. Also provide an email address (if available) and/or a phone number.

PERMIT OR EPA ID NUMBER: Enter the well identification number or permit number assigned to the well by the EPA or the permitting authority.

API NUMBER: Enter the number assigned by the local jurisdiction (usually a State Oil and Gas Agency) using the American Petroleum Institute standard numbering system.

FULL WELL NAME: Enter the full name of the well or project.

Enter the **STATE** and **COUNTY** where the well is located. For States that do not have counties, use the name of that State's equivalent jurisdiction at a more local level.

WELL LOCATION: Fill in the complete township, range, and section to the nearest quarter-quarter section. A township is north or south of the baseline, and a range is east or west of the principal meridian (e.g., T12N, R34W). Also include the distance, in feet, from the nearest north or south line and nearest east or west line of the quarter-section. Also, enter the **latitude** and **longitude** of the well in decimal degrees, to five or six places if possible; be sure to include a negative sign for the longitude of a well in the Western Hemisphere and a negative sign for the latitude of a well in the Southern Hemisphere.

Enter the **WELL CLASS,** i.e., the class of injection well as defined in 40 CFR 144.6.

TIMING OF THE ACTION: Check ***Notice prior to work*** if the activity has not yet occurred (i.e., is planned). Check ***Report after work*** if the activity described has already occurred. As appropriate, include the date the activity is expected to start or the date the activity was completed. (Note this may not be available, e.g., for a plugging plan submitted with a permit application.)

TYPE OF ACTION: Check the appropriate box to describe the kind of activity being reported. Check ***Well Rework*** for work that was/will be performed on the well after it has already been in operation as an injection well. Check ***Plugging and Abandonment*** to report on plans for or descriptions of final closure/plugging after use as an injection well. Check ***Conversion to a Non-Injection Well*** if the well is to be converted to something other than an injection well.

Provide a **NARRATIVE DESCRIPTION** of the work planned to be performed, or that was performed. The narrative should include a description of the main procedures planned or that occurred during the work activity. A service company report, daily report, or similar document may be attached if it includes all the requested information and is clear and legible.

For well reworks, include the following information: The reason for the well rework; depths of activity; type of activity; changes to injection well configuration, well casing, or cement behind casing; any plug added to the well and its depth; any newly drilled interval and its depth; method(s) to demonstrate that the well has mechanical integrity (as applicable); and any deviations from the approved rework plan (as applicable).

For a well plugging plan, include the following information: Reason for the well plugging; number of plugs placed, and their depths; materials used as plugs (e.g., cast iron bridge plug, cement, cement retainer); method to set plugs; and wait-on-cement times, if any. Also provide one or more cost estimates from an independent firm in the business of plugging and abandoning wells to plug the well as described in the plan.

For well plugging affidavit, include the following information: Reason for the well plugging; number of plugs placed, and their depths; materials used as plugs (e.g., cast iron bridge plug, cement, cement retainer); method to set plugs; wait-on-cement times, if any; and any deviations from the approved plugging plan (if applicable).

For conversion to a non-injection well, include the following information: Depths of activity; type of activity; changes to injection well configuration, well casing, or cement behind casing; any plug added to the well and its depth; any newly drilled interval and its depth; depths of new perforations; and method(s) to demonstrate that the well has mechanical integrity (as applicable).

For all of the above activities, include a well sketch depicting the work, results of well tests/logging performed, service company tickets, and any other available information demonstrating how the work was/is to be performed. Also, specify whether depths are below ground surface, relative to Kelly bushing, etc.

CERTIFICATION: This form must be signed and dated by either: a responsible corporate officer for a corporation, by a general partner for a partnership, by the proprietor of a sole proprietorship, or by a principal executive or ranking elected official for a public agency.

PAPERWORK REDUCTION ACT NOTICE: The public reporting and recordkeeping burden for this collection of information is estimated to average between 6.0 and 7.9 hours per response, depending on the injection well class. Burden means the total time, effort, or financial resource expended by persons to generate, maintain, retain, or disclose or provide information to or for a Federal Agency. This includes the time needed to review instructions; develop, acquire, install, and utilize technology and systems for the purposes of collecting, validating, and verifying information, processing and maintaining information, and disclosing and providing information; adjust the existing ways to comply with any previously applicable instructions and requirements; train personnel to be able to respond to the collection of information; search data sources; complete and review the collection of information; and, transmit or otherwise disclose the information. An agency may not conduct or sponsor, and a person is not required to respond to, a collection of information unless it displays a currently valid OMB control number. Send comments on the Agency's need for this information, the accuracy of the provided burden estimates, and any suggested methods for minimizing respondent burden, including the use of automated collection techniques to Director, Collection Strategies Division, U.S. Environmental Protection Agency (2822), 1200 Pennsylvania Ave., NW., Washington, D.C. 20460. Include the OMB control number in any correspondence. Do not send the completed forms to this address.

Drawing Name: G:\PROJECTS\CURIS RESOURCES\38706-CURIS FEASIBILITY\DRAWINGS\JULY 2014 UIC APP\BHP WELL SCHEMATICS\BHP-9.DWG
Operator Name: CANDREVA, LAUREN Plot Date: August 5, 2014 Drawing Layout: HA-FIG-A-L

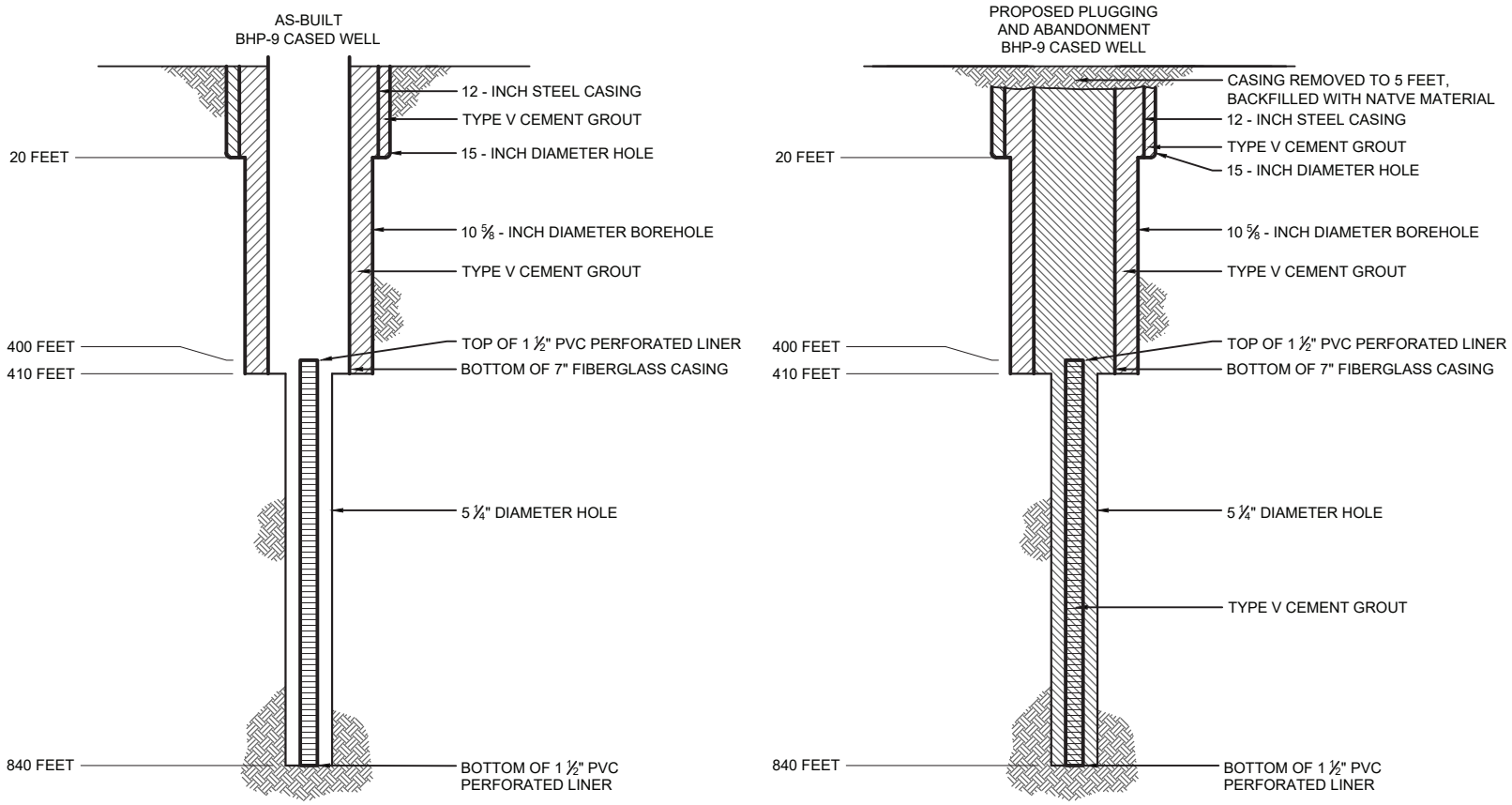

NOTE

WELL DESIGN DETAILS ARE BASED ON BHP RECORDS.

HALEY & ALDRICH

FLORENCE COPPER INC.
FLORENCE, ARIZONA

WELL BHP-9 SCHEMATIC DIAGRAM

SCALE: AS SHOWN
JULY 2014

FIGURE 1

OMB No. 2040-0042 Approval Expires 4/30/2022

United States Environmental Protection Agency

WELL REWORK RECORD, PLUGGING AND ABANDONMENT PLAN, OR PLUGGING AND ABANDONMENT AFFIDAVIT

Name and Address, Phone Number and/or Email of Permittee

Florence Copper Project
1575 W Hunt Hwy,
Florence, AZ 85132

Permit or EPA ID Number	API Number	Full Well Name
R9UIC-AZ3-FY11-1		BHP-10

State	County
Arizona	Pinal

Locate well in two directions from nearest lines of quarter section and drilling unit

Latitude 33.0469193

Longitude -111.4288683

Surface Location

SW **1/4 of** SE **1/4 of Section** 28 **Township** 4S **Range** 9E

385 **ft. from (N/S)** S **Line of quarter section**

535 **ft. from (E/W)** W **Line of quarter section.**

Well Class	Timing of Action (pick one)	Type of Action (pick one)
☐ Class I ☐ Class II ☑ Class III ☐ Class V	☑ Notice Prior to Work Date Expected to Commence March 2021 ☐ Report After Work Date Work Ended	☐ Well Rework ☑ Plugging and Abandonment ☐ Conversion to a Non-Injection Well

Provide a narrative description of the work planned to be performed, or that was performed. Use additional pages as necessary. See instructions.

A workover rig capable of performing the required abandonment operations at the required depths will be moved in and set up over the well. The well casing will be inspected to determine the depth to which the well remains open and if any obstructions are present in the casing; the presence and condition of any existing surface casing will also be documented. If necessary, the well casing will be cleaned out to the bottom of the deepest screen or perforation to enable placement of cement seals.
If surface casing is present, an attempt will be made to remove it. If removal of the surface casing is not feasible, it will be left in the hole and perforated as needed to allow an annular seal to be placed to a depth of at least 25 feet bgs. In areas of agricultural use, the surface casing will be cut at least 5 feet bgs and removed.
If the surface casing cannot be removed, it will be perforated from at least 20 feet below the bedrock-LBFU contact to at least 20 feet above the contact; from at least 20 feet below the base of the MFGU to at least 20 feet above the top of the MFGU; and from at least 25 feet bgs to 5 feet bgs.
A tremie pipe will be used to place Type V cement in the open well from the bottom of the well casing to the top of the well casing. Cement retainers, as described above, will be used to force cement grout into the annulus and behind perforated screen intervals, as necessary.
If the well casing has been obstructed, as much cement as possible will be placed from 100 feet below the LBFU-bedrock contact to the top of the casing.
The volume of Type V cement will be recorded and will not be less than the estimated volume of material required to fill each interval. All cement grout will consist of Type V cement, or equivalent approved in accordance with the UIC Permit.

Perforated Interval: 400 – 820 Feet

Certification

I certify under the penalty of law that I have personally examined and am familiar with the information submitted in this document and all attachments and that, based on my inquiry of those individuals immediately responsible for obtaining the information, I believe that the information is true, accurate, and complete. I am aware that there are significant penalties for submitting false information, including the possibliity of fine and imprisonment. (Ref. 40 CFR § 144.32)

Name and Official Title *(Please type or print)*	Signature	Date Signed
Dan Johnson, VP - General Manager		10/3/2019

INSTRUCTIONS FOR FORM 7520-19

This form replaces forms 7520-12 and 7520-14. Use this form only when work is planned or has occurred that affects the well's construction or operation as an injection well, including work on the casing, tubing or packer (or for shallow Class V wells, the subsurface fluid emplacement network). Use one form per injection well. While reports or other information developed by contractors or service companies may be attached, this form must be signed by a responsible entity as described at 40 CFR 144.32. Note: operators closing Class V wells should use Form 7520-17.

NAME, ADDRESS, PHONE AND/OR EMAIL OF PERMITTEE: Enter the name and street address, city/town, state, and ZIP code of the permittee. Also provide an email address (if available) and/or a phone number.

PERMIT OR EPA ID NUMBER: Enter the well identification number or permit number assigned to the well by the EPA or the permitting authority.

API NUMBER: Enter the number assigned by the local jurisdiction (usually a State Oil and Gas Agency) using the American Petroleum Institute standard numbering system.

FULL WELL NAME: Enter the full name of the well or project.

Enter the **STATE** and **COUNTY** where the well is located. For States that do not have counties, use the name of that State's equivalent jurisdiction at a more local level.

WELL LOCATION: Fill in the complete township, range, and section to the nearest quarter-quarter section. A township is north or south of the baseline, and a range is east or west of the principal meridian (e.g., T12N, R34W). Also include the distance, in feet, from the nearest north or south line and nearest east or west line of the quarter-section. Also, enter the **latitude** and **longitude** of the well in decimal degrees, to five or six places if possible; be sure to include a negative sign for the longitude of a well in the Western Hemisphere and a negative sign for the latitude of a well in the Southern Hemisphere.

Enter the **WELL CLASS,** i.e., the class of injection well as defined in 40 CFR 144.6.

TIMING OF THE ACTION: Check ***Notice prior to work*** if the activity has not yet occurred (i.e., is planned). Check ***Report after work*** if the activity described has already occurred. As appropriate, include the date the activity is expected to start or the date the activity was completed. (Note this may not be available, e.g., for a plugging plan submitted with a permit application.)

TYPE OF ACTION: Check the appropriate box to describe the kind of activity being reported. Check ***Well Rework*** for work that was/will be performed on the well after it has already been in operation as an injection well. Check ***Plugging and Abandonment*** to report on plans for or descriptions of final closure/plugging after use as an injection well. Check ***Conversion to a Non-Injection Well*** if the well is to be converted to something other than an injection well.

Provide a **NARRATIVE DESCRIPTION** of the work planned to be performed, or that was performed. The narrative should include a description of the main procedures planned or that occurred during the work activity. A service company report, daily report, or similar document may be attached if it includes all the requested information and is clear and legible.

For well reworks, include the following information: The reason for the well rework; depths of activity; type of activity; changes to injection well configuration, well casing, or cement behind casing; any plug added to the well and its depth; any newly drilled interval and its depth; method(s) to demonstrate that the well has mechanical integrity (as applicable); and any deviations from the approved rework plan (as applicable).

For a well plugging plan, include the following information: Reason for the well plugging; number of plugs placed, and their depths; materials used as plugs (e.g., cast iron bridge plug, cement, cement retainer); method to set plugs; and wait-on-cement times, if any. Also provide one or more cost estimates from an independent firm in the business of plugging and abandoning wells to plug the well as described in the plan.

For well plugging affidavit, include the following information: Reason for the well plugging; number of plugs placed, and their depths; materials used as plugs (e.g., cast iron bridge plug, cement, cement retainer); method to set plugs; wait-on-cement times, if any; and any deviations from the approved plugging plan (if applicable).

For conversion to a non-injection well, include the following information: Depths of activity; type of activity; changes to injection well configuration, well casing, or cement behind casing; any plug added to the well and its depth; any newly drilled interval and its depth; depths of new perforations; and method(s) to demonstrate that the well has mechanical integrity (as applicable).

For all of the above activities, include a well sketch depicting the work, results of well tests/logging performed, service company tickets, and any other available information demonstrating how the work was/is to be performed. Also, specify whether depths are below ground surface, relative to Kelly bushing, etc.

CERTIFICATION: This form must be signed and dated by either: a responsible corporate officer for a corporation, by a general partner for a partnership, by the proprietor of a sole proprietorship, or by a principal executive or ranking elected official for a public agency.

PAPERWORK REDUCTION ACT NOTICE: The public reporting and recordkeeping burden for this collection of information is estimated to average between 6.0 and 7.9 hours per response, depending on the injection well class. Burden means the total time, effort, or financial resource expended by persons to generate, maintain, retain, or disclose or provide information to or for a Federal Agency. This includes the time needed to review instructions; develop, acquire, install, and utilize technology and systems for the purposes of collecting, validating, and verifying information, processing and maintaining information, and disclosing and providing information; adjust the existing ways to comply with any previously applicable instructions and requirements; train personnel to be able to respond to the collection of information; search data sources; complete and review the collection of information; and, transmit or otherwise disclose the information. An agency may not conduct or sponsor, and a person is not required to respond to, a collection of information unless it displays a currently valid OMB control number. Send comments on the Agency's need for this information, the accuracy of the provided burden estimates, and any suggested methods for minimizing respondent burden, including the use of automated collection techniques to Director, Collection Strategies Division, U.S. Environmental Protection Agency (2822), 1200 Pennsylvania Ave., NW., Washington, D.C. 20460. Include the OMB control number in any correspondence. Do not send the completed forms to this address.

Drawing Name: G:\PROJECTS\CURIS RESOURCES\38706-CURIS FEASIBILITY\DRAWINGS\JULY 2014 UIC APP\BHP WELL SCHEMATICS\BHP-10.DWG
Operator Name: CANDREVA, LAUREN Plot Date: August 5, 2014 Drawing Layout: HA-FIG-A-L

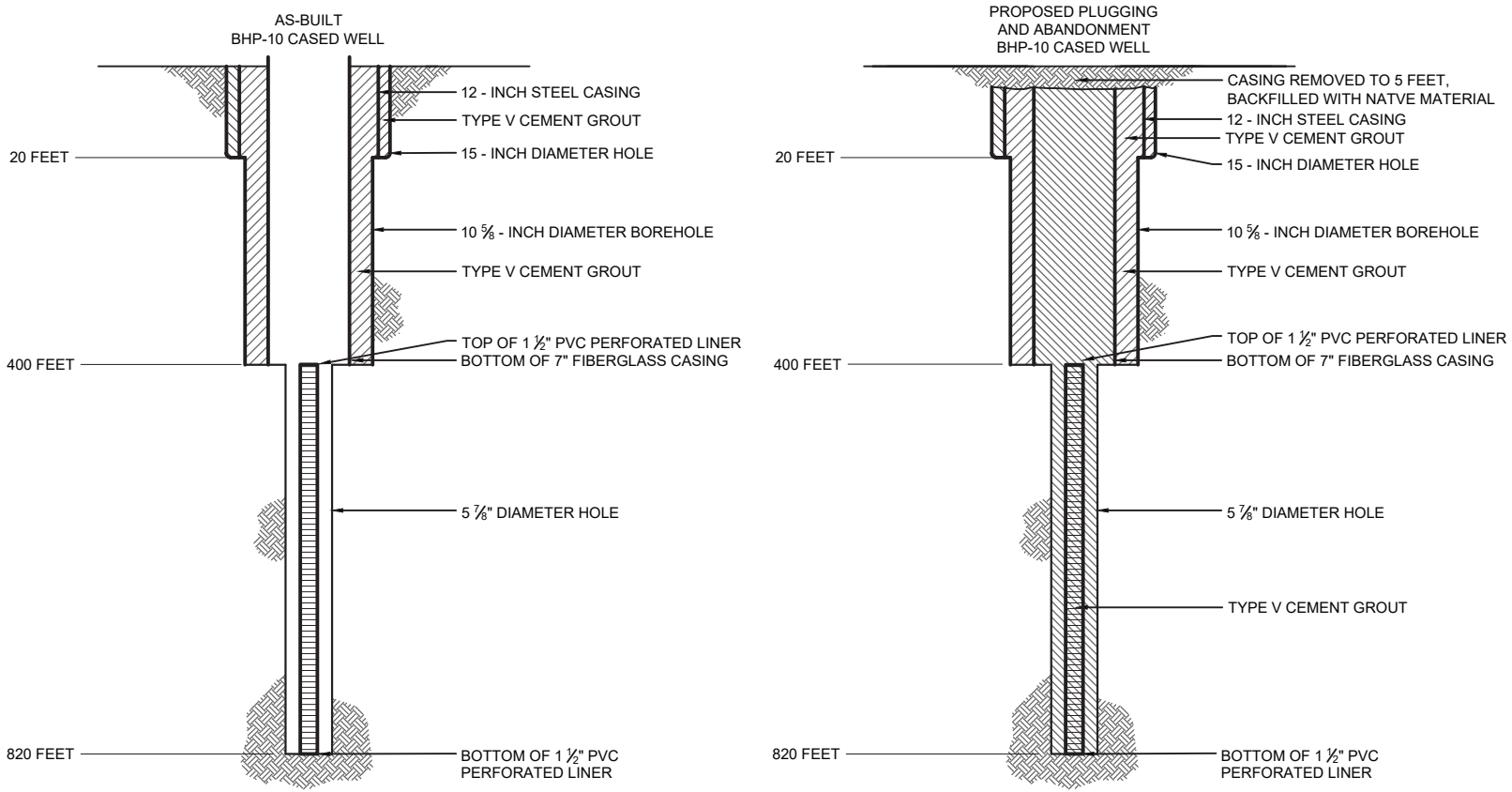

NOTE

WELL DESIGN DETAILS ARE BASED ON BHP RECORDS.

HALEY & ALDRICH

FLORENCE COPPER INC.
FLORENCE, ARIZONA

WELL BHP-10 SCHEMATIC DIAGRAM

SCALE: AS SHOWN
JULY 2014

FIGURE 1

OMB No. 2040-0042 Approval Expires 4/30/2022

United States Environmental Protection Agency

EPA

WELL REWORK RECORD, PLUGGING AND ABANDONMENT PLAN, OR PLUGGING AND ABANDONMENT AFFIDAVIT

Name and Address, Phone Number and/or Email of Permittee

Florence Copper Project
1575 W Hunt Hwy,
Florence, AZ 85132

Permit or EPA ID Number	API Number	Full Well Name
R9UIC-AZ3-FY11-1		BHP-11

State	County
Arizona	Pinal

Locate well in two directions from nearest lines of quarter section and drilling unit

Latitude 33.04720368

Longitude -111.4291931

Surface Location

SW **1/4 of** SE **1/4 of Section** 28 **Township** 4S **Range** 9E

490 **ft. from (N/S)** S **Line of quarter section**

435 **ft. from (E/W)** W **Line of quarter section.**

Well Class	Timing of Action (pick one)	Type of Action (pick one)
☐ Class I ☐ Class II ☑ Class III ☐ Class V	☑ Notice Prior to Work Date Expected to Commence March 2021 ☐ Report After Work Date Work Ended	☐ Well Rework ☑ Plugging and Abandonment ☐ Conversion to a Non-Injection Well

Provide a narrative description of the work planned to be performed, or that was performed. Use additional pages as necessary. See instructions.

A workover rig capable of performing the required abandonment operations at the required depths will be moved in and set up over the well. The well casing will be inspected to determine the depth to which the well remains open and if any obstructions are present in the casing; the presence and condition of any existing surface casing will also be documented. If necessary, the well casing will be cleaned out to the bottom of the deepest screen or perforation to enable placement of cement seals.
If surface casing is present, an attempt will be made to remove it. If removal of the surface casing is not feasible, it will be left in the hole and perforated as needed to allow an annular seal to be placed to a depth of at least 25 feet bgs. In areas of agricultural use, the surface casing will be cut at least 5 feet bgs and removed.
If the surface casing cannot be removed, it will be perforated from at least 20 feet below the bedrock-LBFU contact to at least 20 feet above the contact; from at least 20 feet below the base of the MFGU to at least 20 feet above the top of the MFGU; and from at least 25 feet bgs to 5 feet bgs.
A tremie pipe will be used to place Type V cement in the open well from the bottom of the well casing to the top of the well casing. Cement retainers, as described above, will be used to force cement grout into the annulus and behind perforated screen intervals, as necessary.
If the well casing has been obstructed, as much cement as possible will be placed from 100 feet below the LBFU-bedrock contact to the top of the casing.
The volume of Type V cement will be recorded and will not be less than the estimated volume of material required to fill each interval. All cement grout will consist of Type V cement, or equivalent approved in accordance with the UIC Permit.

Perforated Interval: 400 – 805 Feet

Certification

I certify under the penalty of law that I have personally examined and am familiar with the information submitted in this document and all attachments and that, based on my inquiry of those individuals immediately responsible for obtaining the information, I believe that the information is true, accurate, and complete. I am aware that there are significant penalties for submitting false information, including the possibliity of fine and imprisonment. (Ref. 40 CFR § 144.32)

Name and Official Title *(Please type or print)*	Signature	Date Signed
Dan Johnson, VP - General Manager		10/3/2019

INSTRUCTIONS FOR FORM 7520-19

This form replaces forms 7520-12 and 7520-14. Use this form only when work is planned or has occurred that affects the well's construction or operation as an injection well, including work on the casing, tubing or packer (or for shallow Class V wells, the subsurface fluid emplacement network). Use one form per injection well. While reports or other information developed by contractors or service companies may be attached, this form must be signed by a responsible entity as described at 40 CFR 144.32. Note: operators closing Class V wells should use Form 7520-17.

NAME, ADDRESS, PHONE AND/OR EMAIL OF PERMITTEE: Enter the name and street address, city/town, state, and ZIP code of the permittee. Also provide an email address (if available) and/or a phone number.

PERMIT OR EPA ID NUMBER: Enter the well identification number or permit number assigned to the well by the EPA or the permitting authority.

API NUMBER: Enter the number assigned by the local jurisdiction (usually a State Oil and Gas Agency) using the American Petroleum Institute standard numbering system.

FULL WELL NAME: Enter the full name of the well or project.

Enter the **STATE** and **COUNTY** where the well is located. For States that do not have counties, use the name of that State's equivalent jurisdiction at a more local level.

WELL LOCATION: Fill in the complete township, range, and section to the nearest quarter-quarter section. A township is north or south of the baseline, and a range is east or west of the principal meridian (e.g., T12N, R34W). Also include the distance, in feet, from the nearest north or south line and nearest east or west line of the quarter-section. Also, enter the **latitude** and **longitude** of the well in decimal degrees, to five or six places if possible; be sure to include a negative sign for the longitude of a well in the Western Hemisphere and a negative sign for the latitude of a well in the Southern Hemisphere.

Enter the **WELL CLASS,** i.e., the class of injection well as defined in 40 CFR 144.6.

TIMING OF THE ACTION: Check ***Notice prior to work*** if the activity has not yet occurred (i.e., is planned). Check ***Report after work*** if the activity described has already occurred. As appropriate, include the date the activity is expected to start or the date the activity was completed. (Note this may not be available, e.g., for a plugging plan submitted with a permit application.)

TYPE OF ACTION: Check the appropriate box to describe the kind of activity being reported. Check ***Well Rework*** for work that was/will be performed on the well after it has already been in operation as an injection well. Check ***Plugging and Abandonment*** to report on plans for or descriptions of final closure/plugging after use as an injection well. Check ***Conversion to a Non-Injection Well*** if the well is to be converted to something other than an injection well.

Provide a **NARRATIVE DESCRIPTION** of the work planned to be performed, or that was performed. The narrative should include a description of the main procedures planned or that occurred during the work activity. A service company report, daily report, or similar document may be attached if it includes all the requested information and is clear and legible.

For well reworks, include the following information: The reason for the well rework; depths of activity; type of activity; changes to injection well configuration, well casing, or cement behind casing; any plug added to the well and its depth; any newly drilled interval and its depth; method(s) to demonstrate that the well has mechanical integrity (as applicable); and any deviations from the approved rework plan (as applicable).

For a well plugging plan, include the following information: Reason for the well plugging; number of plugs placed, and their depths; materials used as plugs (e.g., cast iron bridge plug, cement, cement retainer); method to set plugs; and wait-on-cement times, if any. Also provide one or more cost estimates from an independent firm in the business of plugging and abandoning wells to plug the well as described in the plan.

For well plugging affidavit, include the following information: Reason for the well plugging; number of plugs placed, and their depths; materials used as plugs (e.g., cast iron bridge plug, cement, cement retainer); method to set plugs; wait-on-cement times, if any; and any deviations from the approved plugging plan (if applicable).

For conversion to a non-injection well, include the following information: Depths of activity; type of activity; changes to injection well configuration, well casing, or cement behind casing; any plug added to the well and its depth; any newly drilled interval and its depth; depths of new perforations; and method(s) to demonstrate that the well has mechanical integrity (as applicable).

For all of the above activities, include a well sketch depicting the work, results of well tests/logging performed, service company tickets, and any other available information demonstrating how the work was/is to be performed. Also, specify whether depths are below ground surface, relative to Kelly bushing, etc.

CERTIFICATION: This form must be signed and dated by either: a responsible corporate officer for a corporation, by a general partner for a partnership, by the proprietor of a sole proprietorship, or by a principal executive or ranking elected official for a public agency.

PAPERWORK REDUCTION ACT NOTICE: The public reporting and recordkeeping burden for this collection of information is estimated to average between 6.0 and 7.9 hours per response, depending on the injection well class. Burden means the total time, effort, or financial resource expended by persons to generate, maintain, retain, or disclose or provide information to or for a Federal Agency. This includes the time needed to review instructions; develop, acquire, install, and utilize technology and systems for the purposes of collecting, validating, and verifying information, processing and maintaining information, and disclosing and providing information; adjust the existing ways to comply with any previously applicable instructions and requirements; train personnel to be able to respond to the collection of information; search data sources; complete and review the collection of information; and, transmit or otherwise disclose the information. An agency may not conduct or sponsor, and a person is not required to respond to, a collection of information unless it displays a currently valid OMB control number. Send comments on the Agency's need for this information, the accuracy of the provided burden estimates, and any suggested methods for minimizing respondent burden, including the use of automated collection techniques to Director, Collection Strategies Division, U.S. Environmental Protection Agency (2822), 1200 Pennsylvania Ave., NW., Washington, D.C. 20460. Include the OMB control number in any correspondence. Do not send the completed forms to this address.

Drawing Name: G:\PROJECTS\CURIS RESOURCES\38706-CURIS FEASIBILITY\DRAWINGS\JULY 2014 UIC APP\BHP WELL SCHEMATICS\BHP-11.DWG
Operator Name: CANDREVA, LAUREN Plot Date: August 5, 2014 Drawing Layout: HA-FIG-A-L

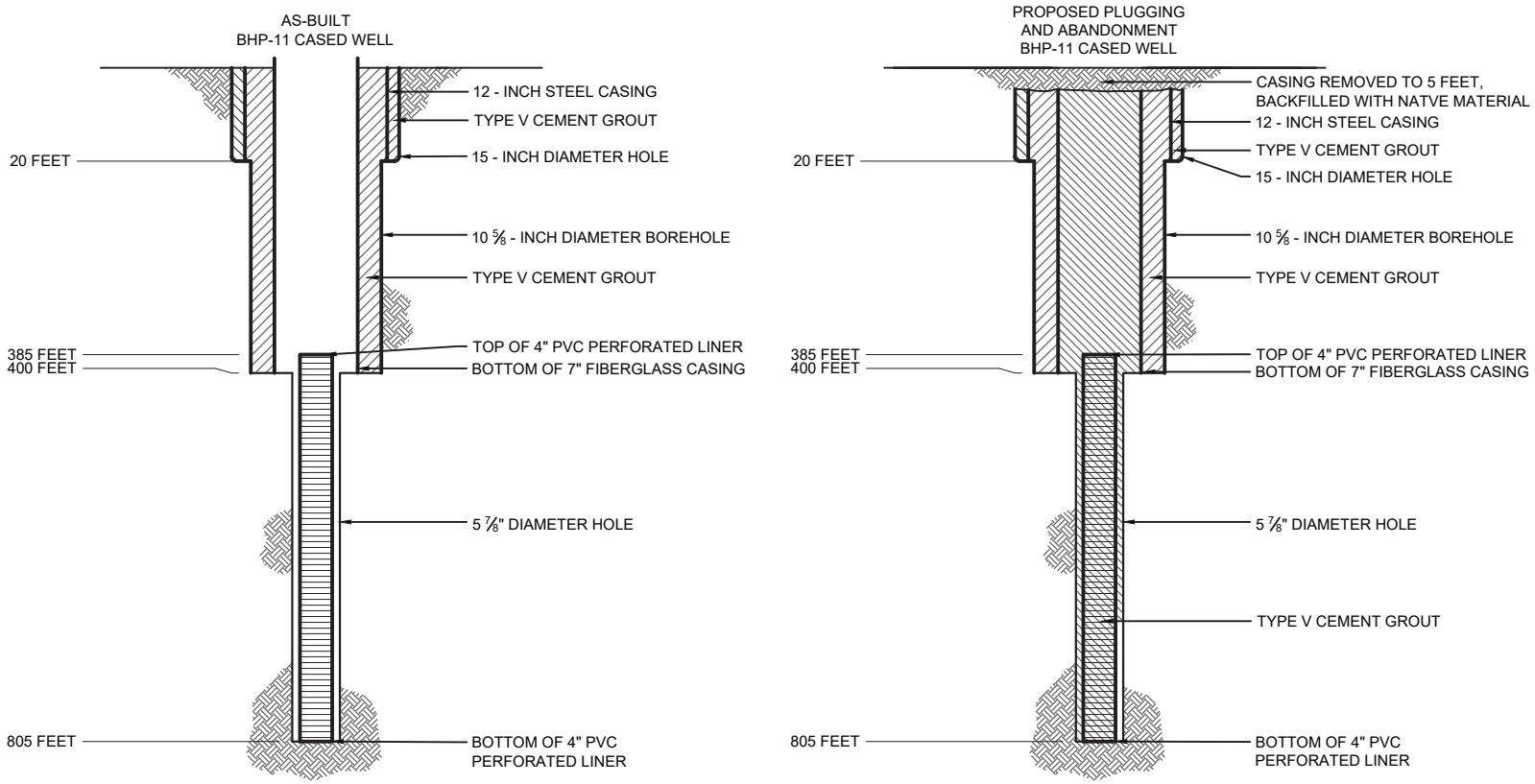

NOTE

WELL DESIGN DETAILS ARE BASED ON BHP RECORDS.

HALEY & ALDRICH

FLORENCE COPPER INC.
FLORENCE, ARIZONA

WELL BHP-11 SCHEMATIC DIAGRAM

SCALE: AS SHOWN
JULY 2014

FIGURE 1

OMB No. 2040-0042 Approval Expires 4/30/2022

United States Environmental Protection Agency

WELL REWORK RECORD, PLUGGING AND ABANDONMENT PLAN, OR PLUGGING AND ABANDONMENT AFFIDAVIT

Name and Address, Phone Number and/or Email of Permittee

Florence Copper Project
1575 W Hunt Hwy,
Florence, AZ 85132

Permit or EPA ID Number	API Number	Full Well Name
R9UIC-AZ3-FY11-1		BHP-12

State	County
Arizona	Pinal

Locate well in two directions from nearest lines of quarter section and drilling unit

Latitude 33.04692185

Longitude -111.429521

Surface Location

SW **1/4 of** SE **1/4 of Section** 28 **Township** 4S **Range** 9E

385 **ft. from (N/S)** S **Line of quarter section**

335 **ft. from (E/W)** W **Line of quarter section.**

Well Class	Timing of Action (pick one)	Type of Action (pick one)
☐ Class I ☐ Class II ☑ Class III ☐ Class V	☑ Notice Prior to Work Date Expected to Commence March 2021 ☐ Report After Work Date Work Ended	☐ Well Rework ☑ Plugging and Abandonment ☐ Conversion to a Non-Injection Well

Provide a narrative description of the work planned to be performed, or that was performed. Use additional pages as necessary. See instructions.

A workover rig capable of performing the required abandonment operations at the required depths will be moved in and set up over the well. The well casing will be inspected to determine the depth to which the well remains open and if any obstructions are present in the casing; the presence and condition of any existing surface casing will also be documented. If necessary, the well casing will be cleaned out to the bottom of the deepest screen or perforation to enable placement of cement seals.
If surface casing is present, an attempt will be made to remove it. If removal of the surface casing is not feasible, it will be left in the hole and perforated as needed to allow an annular seal to be placed to a depth of at least 25 feet bgs. In areas of agricultural use, the surface casing will be cut at least 5 feet bgs and removed.
If the surface casing cannot be removed, it will be perforated from at least 20 feet below the bedrock-LBFU contact to at least 20 feet above the contact; from at least 20 feet below the base of the MFGU to at least 20 feet above the top of the MFGU; and from at least 25 feet bgs to 5 feet bgs.
A tremie pipe will be used to place Type V cement in the open well from the bottom of the well casing to the top of the well casing. Cement retainers, as described above, will be used to force cement grout into the annulus and behind perforated screen intervals, as necessary.
If the well casing has been obstructed, as much cement as possible will be placed from 100 feet below the LBFU-bedrock contact to the top of the casing.
The volume of Type V cement will be recorded and will not be less than the estimated volume of material required to fill each interval. All cement grout will consist of Type V cement, or equivalent approved in accordance with the UIC Permit.

Perforated Interval: 400 – 770 Feet

Certification

I certify under the penalty of law that I have personally examined and am familiar with the information submitted in this document and all attachments and that, based on my inquiry of those individuals immediately responsible for obtaining the information, I believe that the information is true, accurate, and complete. I am aware that there are significant penalties for submitting false information, including the possibliity of fine and imprisonment. (Ref. 40 CFR § 144.32)

Name and Official Title *(Please type or print)*	Signature	Date Signed
Dan Johnson, VP - General Manager		10/3/2019

INSTRUCTIONS FOR FORM 7520-19

This form replaces forms 7520-12 and 7520-14. Use this form only when work is planned or has occurred that affects the well's construction or operation as an injection well, including work on the casing, tubing or packer (or for shallow Class V wells, the subsurface fluid emplacement network). Use one form per injection well. While reports or other information developed by contractors or service companies may be attached, this form must be signed by a responsible entity as described at 40 CFR 144.32. Note: operators closing Class V wells should use Form 7520-17.

NAME, ADDRESS, PHONE AND/OR EMAIL OF PERMITTEE: Enter the name and street address, city/town, state, and ZIP code of the permittee. Also provide an email address (if available) and/or a phone number.

PERMIT OR EPA ID NUMBER: Enter the well identification number or permit number assigned to the well by the EPA or the permitting authority.

API NUMBER: Enter the number assigned by the local jurisdiction (usually a State Oil and Gas Agency) using the American Petroleum Institute standard numbering system.

FULL WELL NAME: Enter the full name of the well or project.

Enter the **STATE** and **COUNTY** where the well is located. For States that do not have counties, use the name of that State's equivalent jurisdiction at a more local level.

WELL LOCATION: Fill in the complete township, range, and section to the nearest quarter-quarter section. A township is north or south of the baseline, and a range is east or west of the principal meridian (e.g., T12N, R34W). Also include the distance, in feet, from the nearest north or south line and nearest east or west line of the quarter-section. Also, enter the **latitude** and **longitude** of the well in decimal degrees, to five or six places if possible; be sure to include a negative sign for the longitude of a well in the Western Hemisphere and a negative sign for the latitude of a well in the Southern Hemisphere.

Enter the **WELL CLASS,** i.e., the class of injection well as defined in 40 CFR 144.6.

TIMING OF THE ACTION: Check ***Notice prior to work*** if the activity has not yet occurred (i.e., is planned). Check ***Report after work*** if the activity described has already occurred. As appropriate, include the date the activity is expected to start or the date the activity was completed. (Note this may not be available, e.g., for a plugging plan submitted with a permit application.)

TYPE OF ACTION: Check the appropriate box to describe the kind of activity being reported. Check ***Well Rework*** for work that was/will be performed on the well after it has already been in operation as an injection well. Check ***Plugging and Abandonment*** to report on plans for or descriptions of final closure/plugging after use as an injection well. Check ***Conversion to a Non-Injection Well*** if the well is to be converted to something other than an injection well.

Provide a **NARRATIVE DESCRIPTION** of the work planned to be performed, or that was performed. The narrative should include a description of the main procedures planned or that occurred during the work activity. A service company report, daily report, or similar document may be attached if it includes all the requested information and is clear and legible.

For well reworks, include the following information: The reason for the well rework; depths of activity; type of activity; changes to injection well configuration, well casing, or cement behind casing; any plug added to the well and its depth; any newly drilled interval and its depth; method(s) to demonstrate that the well has mechanical integrity (as applicable); and any deviations from the approved rework plan (as applicable).

For a well plugging plan, include the following information: Reason for the well plugging; number of plugs placed, and their depths; materials used as plugs (e.g., cast iron bridge plug, cement, cement retainer); method to set plugs; and wait-on-cement times, if any. Also provide one or more cost estimates from an independent firm in the business of plugging and abandoning wells to plug the well as described in the plan.

For well plugging affidavit, include the following information: Reason for the well plugging; number of plugs placed, and their depths; materials used as plugs (e.g., cast iron bridge plug, cement, cement retainer); method to set plugs; wait-on-cement times, if any; and any deviations from the approved plugging plan (if applicable).

For conversion to a non-injection well, include the following information: Depths of activity; type of activity; changes to injection well configuration, well casing, or cement behind casing; any plug added to the well and its depth; any newly drilled interval and its depth; depths of new perforations; and method(s) to demonstrate that the well has mechanical integrity (as applicable).

For all of the above activities, include a well sketch depicting the work, results of well tests/logging performed, service company tickets, and any other available information demonstrating how the work was/is to be performed. Also, specify whether depths are below ground surface, relative to Kelly bushing, etc.

CERTIFICATION: This form must be signed and dated by either: a responsible corporate officer for a corporation, by a general partner for a partnership, by the proprietor of a sole proprietorship, or by a principal executive or ranking elected official for a public agency.

PAPERWORK REDUCTION ACT NOTICE: The public reporting and recordkeeping burden for this collection of information is estimated to average between 6.0 and 7.9 hours per response, depending on the injection well class. Burden means the total time, effort, or financial resource expended by persons to generate, maintain, retain, or disclose or provide information to or for a Federal Agency. This includes the time needed to review instructions; develop, acquire, install, and utilize technology and systems for the purposes of collecting, validating, and verifying information, processing and maintaining information, and disclosing and providing information; adjust the existing ways to comply with any previously applicable instructions and requirements; train personnel to be able to respond to the collection of information; search data sources; complete and review the collection of information; and, transmit or otherwise disclose the information. An agency may not conduct or sponsor, and a person is not required to respond to, a collection of information unless it displays a currently valid OMB control number. Send comments on the Agency's need for this information, the accuracy of the provided burden estimates, and any suggested methods for minimizing respondent burden, including the use of automated collection techniques to Director, Collection Strategies Division, U.S. Environmental Protection Agency (2822), 1200 Pennsylvania Ave., NW., Washington, D.C. 20460. Include the OMB control number in any correspondence. Do not send the completed forms to this address.

Drawing Name: G:\PROJECTS\CURIS RESOURCES\38706-CURIS FEASIBILITY\DRAWINGS\JULY 2014 UIC APP\BHP WELL SCHEMATICS\BHP-12.DWG
Operator Name: CANDREVA, LAUREN Plot Date: August 5, 2014 Drawing Layout: HA-FIG-A-L

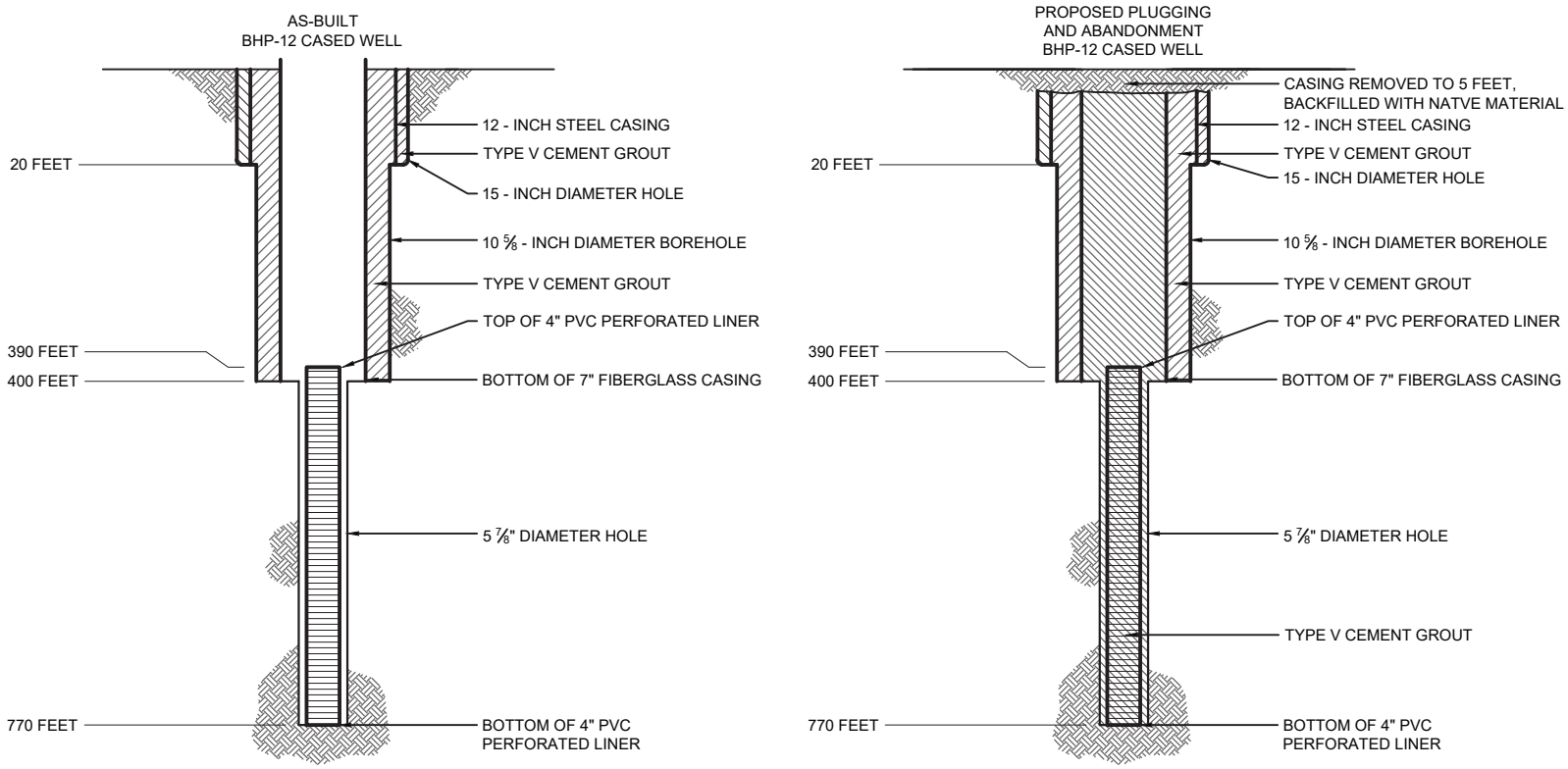

NOTE

WELL DESIGN DETAILS ARE BASED ON BHP RECORDS.

HALEY & ALDRICH

FLORENCE COPPER INC.
FLORENCE, ARIZONA

WELL BHP-12 SCHEMATIC DIAGRAM

SCALE: AS SHOWN
JULY 2014

FIGURE 1

OMB No. 2040-0042 Approval Expires 4/30/2022

United States Environmental Protection Agency

EPA

WELL REWORK RECORD, PLUGGING AND ABANDONMENT PLAN, OR PLUGGING AND ABANDONMENT AFFIDAVIT

Name and Address, Phone Number and/or Email of Permittee

Florence Copper Project
1575 W Hunt Hwy,
Florence, AZ 85132

Permit or EPA ID Number	API Number	Full Well Name
R9UIC-AZ3-FY11-1		BHP-13

State	County
Arizona	Pinal

Locate well in two directions from nearest lines of quarter section and drilling unit

Latitude 33.04664847

Longitude -111.4291961

Surface Location

SW **1/4 of** SE **1/4 of Section** 28 **Township** 4S **Range** 9E

290 **ft. from (N/S)** S **Line of quarter section**

435 **ft. from (E/W)** W **Line of quarter section.**

Well Class	Timing of Action (pick one)	Type of Action (pick one)
☐ Class I ☐ Class II ☑ Class III ☐ Class V	☑ Notice Prior to Work Date Expected to Commence March 2021 ☐ Report After Work Date Work Ended	☐ Well Rework ☑ Plugging and Abandonment ☐ Conversion to a Non-Injection Well

Provide a narrative description of the work planned to be performed, or that was performed. Use additional pages as necessary. See instructions.

A workover rig capable of performing the required abandonment operations at the required depths will be moved in and set up over the well. The well casing will be inspected to determine the depth to which the well remains open and if any obstructions are present in the casing; the presence and condition of any existing surface casing will also be documented. If necessary, the well casing will be cleaned out to the bottom of the deepest screen or perforation to enable placement of cement seals.
If surface casing is present, an attempt will be made to remove it. If removal of the surface casing is not feasible, it will be left in the hole and perforated as needed to allow an annular seal to be placed to a depth of at least 25 feet bgs. In areas of agricultural use, the surface casing will be cut at least 5 feet bgs and removed.
If the surface casing cannot be removed, it will be perforated from at least 20 feet below the bedrock-LBFU contact to at least 20 feet above the contact; from at least 20 feet below the base of the MFGU to at least 20 feet above the top of the MFGU; and from at least 25 feet bgs to 5 feet bgs.
A tremie pipe will be used to place Type V cement in the open well from the bottom of the well casing to the top of the well casing. Cement retainers, as described above, will be used to force cement grout into the annulus and behind perforated screen intervals, as necessary.
If the well casing has been obstructed, as much cement as possible will be placed from 100 feet below the LBFU-bedrock contact to the top of the casing.
The volume of Type V cement will be recorded and will not be less than the estimated volume of material required to fill each interval. All cement grout will consist of Type V cement, or equivalent approved in accordance with the UIC Permit.

Perforated Interval: 420 – 826 Feet

Certification

I certify under the penalty of law that I have personally examined and am familiar with the information submitted in this document and all attachments and that, based on my inquiry of those individuals immediately responsible for obtaining the information, I believe that the information is true, accurate, and complete. I am aware that there are significant penalties for submitting false information, including the possibliity of fine and imprisonment. (Ref. 40 CFR § 144.32)

Name and Official Title *(Please type or print)*	Signature	Date Signed
Dan Johnson, VP - General Manager		10/3/2019

INSTRUCTIONS FOR FORM 7520-19

This form replaces forms 7520-12 and 7520-14. Use this form only when work is planned or has occurred that affects the well's construction or operation as an injection well, including work on the casing, tubing or packer (or for shallow Class V wells, the subsurface fluid emplacement network). Use one form per injection well. While reports or other information developed by contractors or service companies may be attached, this form must be signed by a responsible entity as described at 40 CFR 144.32. Note: operators closing Class V wells should use Form 7520-17.

NAME, ADDRESS, PHONE AND/OR EMAIL OF PERMITTEE: Enter the name and street address, city/town, state, and ZIP code of the permittee. Also provide an email address (if available) and/or a phone number.

PERMIT OR EPA ID NUMBER: Enter the well identification number or permit number assigned to the well by the EPA or the permitting authority.

API NUMBER: Enter the number assigned by the local jurisdiction (usually a State Oil and Gas Agency) using the American Petroleum Institute standard numbering system.

FULL WELL NAME: Enter the full name of the well or project.

Enter the **STATE** and **COUNTY** where the well is located. For States that do not have counties, use the name of that State's equivalent jurisdiction at a more local level.

WELL LOCATION: Fill in the complete township, range, and section to the nearest quarter-quarter section. A township is north or south of the baseline, and a range is east or west of the principal meridian (e.g., T12N, R34W). Also include the distance, in feet, from the nearest north or south line and nearest east or west line of the quarter-section. Also, enter the **latitude** and **longitude** of the well in decimal degrees, to five or six places if possible; be sure to include a negative sign for the longitude of a well in the Western Hemisphere and a negative sign for the latitude of a well in the Southern Hemisphere.

Enter the **WELL CLASS,** i.e., the class of injection well as defined in 40 CFR 144.6.

TIMING OF THE ACTION: Check ***Notice prior to work*** if the activity has not yet occurred (i.e., is planned). Check ***Report after work*** if the activity described has already occurred. As appropriate, include the date the activity is expected to start or the date the activity was completed. (Note this may not be available, e.g., for a plugging plan submitted with a permit application.)

TYPE OF ACTION: Check the appropriate box to describe the kind of activity being reported. Check ***Well Rework*** for work that was/will be performed on the well after it has already been in operation as an injection well. Check ***Plugging and Abandonment*** to report on plans for or descriptions of final closure/plugging after use as an injection well. Check ***Conversion to a Non-Injection Well*** if the well is to be converted to something other than an injection well.

Provide a **NARRATIVE DESCRIPTION** of the work planned to be performed, or that was performed. The narrative should include a description of the main procedures planned or that occurred during the work activity. A service company report, daily report, or similar document may be attached if it includes all the requested information and is clear and legible.

For well reworks, include the following information: The reason for the well rework; depths of activity; type of activity; changes to injection well configuration, well casing, or cement behind casing; any plug added to the well and its depth; any newly drilled interval and its depth; method(s) to demonstrate that the well has mechanical integrity (as applicable); and any deviations from the approved rework plan (as applicable).

For a well plugging plan, include the following information: Reason for the well plugging; number of plugs placed, and their depths; materials used as plugs (e.g., cast iron bridge plug, cement, cement retainer); method to set plugs; and wait-on-cement times, if any. Also provide one or more cost estimates from an independent firm in the business of plugging and abandoning wells to plug the well as described in the plan.

For well plugging affidavit, include the following information: Reason for the well plugging; number of plugs placed, and their depths; materials used as plugs (e.g., cast iron bridge plug, cement, cement retainer); method to set plugs; wait-on-cement times, if any; and any deviations from the approved plugging plan (if applicable).

For conversion to a non-injection well, include the following information: Depths of activity; type of activity; changes to injection well configuration, well casing, or cement behind casing; any plug added to the well and its depth; any newly drilled interval and its depth; depths of new perforations; and method(s) to demonstrate that the well has mechanical integrity (as applicable).

For all of the above activities, include a well sketch depicting the work, results of well tests/logging performed, service company tickets, and any other available information demonstrating how the work was/is to be performed. Also, specify whether depths are below ground surface, relative to Kelly bushing, etc.

CERTIFICATION: This form must be signed and dated by either: a responsible corporate officer for a corporation, by a general partner for a partnership, by the proprietor of a sole proprietorship, or by a principal executive or ranking elected official for a public agency.

PAPERWORK REDUCTION ACT NOTICE: The public reporting and recordkeeping burden for this collection of information is estimated to average between 6.0 and 7.9 hours per response, depending on the injection well class. Burden means the total time, effort, or financial resource expended by persons to generate, maintain, retain, or disclose or provide information to or for a Federal Agency. This includes the time needed to review instructions; develop, acquire, install, and utilize technology and systems for the purposes of collecting, validating, and verifying information, processing and maintaining information, and disclosing and providing information; adjust the existing ways to comply with any previously applicable instructions and requirements; train personnel to be able to respond to the collection of information; search data sources; complete and review the collection of information; and, transmit or otherwise disclose the information. An agency may not conduct or sponsor, and a person is not required to respond to, a collection of information unless it displays a currently valid OMB control number. Send comments on the Agency's need for this information, the accuracy of the provided burden estimates, and any suggested methods for minimizing respondent burden, including the use of automated collection techniques to Director, Collection Strategies Division, U.S. Environmental Protection Agency (2822), 1200 Pennsylvania Ave., NW., Washington, D.C. 20460. Include the OMB control number in any correspondence. Do not send the completed forms to this address.

Drawing Name: G:\PROJECTS\CURIS RESOURCES\38706-CURIS FEASIBILITY\DRAWINGS\JULY 2014 UIC APP\BHP WELL SCHEMATICS\BHP-13.DWG
Operator Name: CANDREVA, LAUREN Plot Date: August 5, 2014 Drawing Layout: HA-FIG-A-L

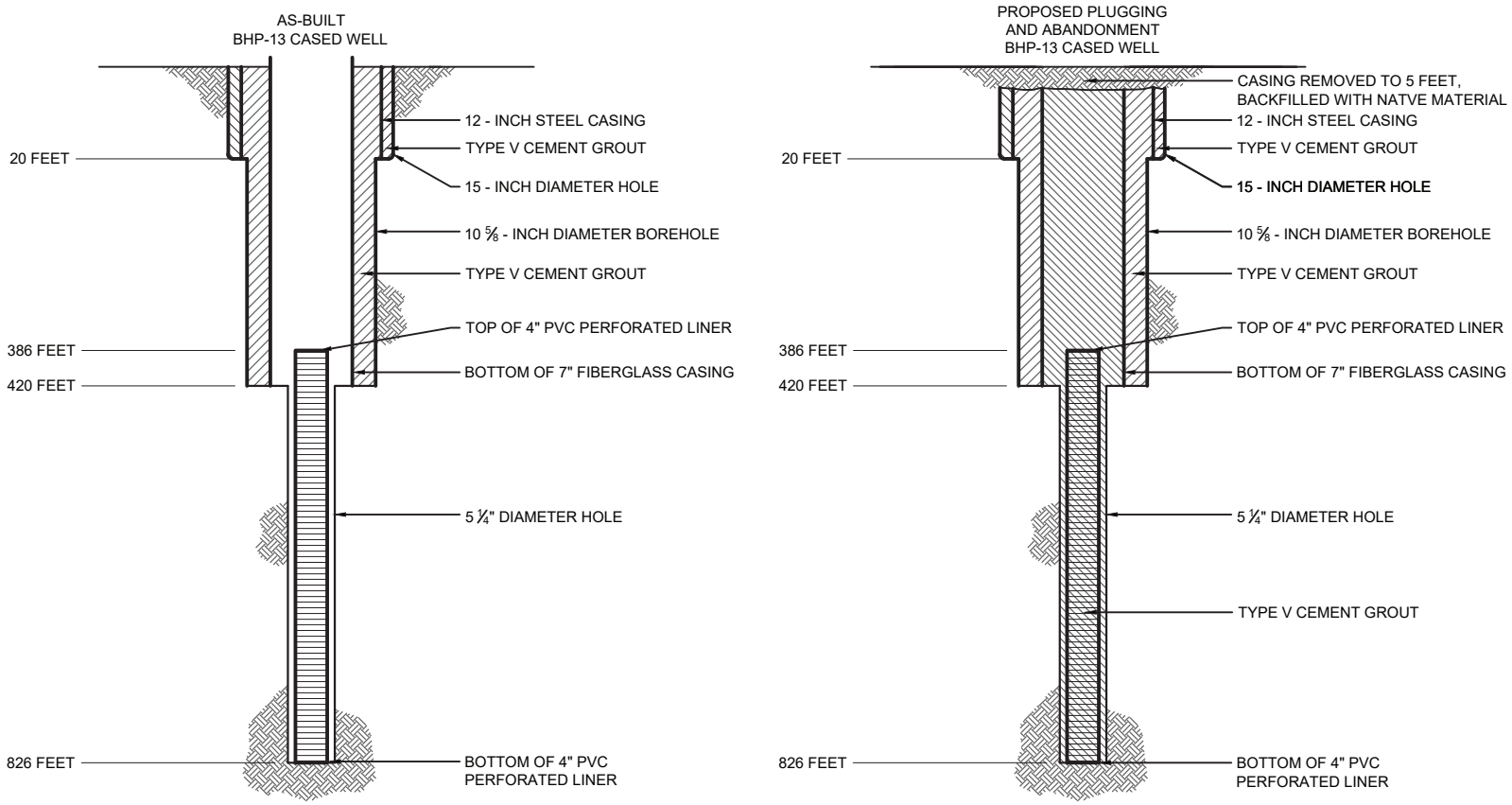

NOTE

WELL DESIGN DETAILS ARE BASED ON BHP RECORDS.

HALEY & ALDRICH

FLORENCE COPPER INC.
FLORENCE, ARIZONA

WELL BHP-13 SCHEMATIC DIAGRAM

SCALE: AS SHOWN
JULY 2014

FIGURE 1

OMB No. 2040-0042 Approval Expires 4/30/2022

United States Environmental Protection Agency

WELL REWORK RECORD, PLUGGING AND ABANDONMENT PLAN, OR PLUGGING AND ABANDONMENT AFFIDAVIT

Name and Address, Phone Number and/or Email of Permittee

Florence Copper Project
1575 W Hunt Hwy,
Florence, AZ 85132

Permit or EPA ID Number	API Number	Full Well Name
R9UIC-AZ3-FY11-1		CH-1

State	County
Arizona	Pinal

Locate well in two directions from nearest lines of quarter section and drilling unit

Latitude 33.04695342

Longitude -111.4291585

Surface Location

SW **1/4 of** SE **1/4 of Section** 28 **Township** 4S **Range** 9E

400 **ft. from (N/S)** S **Line of quarter section**

445 **ft. from (E/W)** W **Line of quarter section.**

Well Class	Timing of Action (pick one)	Type of Action (pick one)
☐ Class I ☐ Class II ☑ Class III ☐ Class V	☑ Notice Prior to Work Date Expected to Commence March 2021 ☐ Report After Work Date Work Ended	☐ Well Rework ☑ Plugging and Abandonment ☐ Conversion to a Non-Injection Well

Provide a narrative description of the work planned to be performed, or that was performed. Use additional pages as necessary. See instructions.

A workover rig capable of performing the required abandonment operations at the required depths will be moved in and set up over the well. The well casing will be inspected to determine the depth to which the well remains open and if any obstructions are present in the casing; the presence and condition of any existing surface casing will also be documented. If necessary, the well casing will be cleaned out to the bottom of the deepest screen or perforation to enable placement of cement seals.
If surface casing is present, an attempt will be made to remove it. If removal of the surface casing is not feasible, it will be left in the hole and perforated as needed to allow an annular seal to be placed to a depth of at least 25 feet bgs. In areas of agricultural use, the surface casing will be cut at least 5 feet bgs and removed.
If the surface casing cannot be removed, it will be perforated from at least 20 feet below the bedrock-LBFU contact to at least 20 feet above the contact; from at least 20 feet below the base of the MFGU to at least 20 feet above the top of the MFGU; and from at least 25 feet bgs to 5 feet bgs.
A tremie pipe will be used to place Type V cement in the open well from the bottom of the well casing to the top of the well casing. Cement retainers, as described above, will be used to force cement grout into the annulus and behind perforated screen intervals, as necessary.
If the well casing has been obstructed, as much cement as possible will be placed from 100 feet below the LBFU-bedrock contact to the top of the casing.
The volume of Type V cement will be recorded and will not be less than the estimated volume of material required to fill each interval. All cement grout will consist of Type V cement, or equivalent approved in accordance with the UIC Permit.

Perforated Interval: 420 - 520, 560 - 660, 700 - 780 Feet

Certification

I certify under the penalty of law that I have personally examined and am familiar with the information submitted in this document and all attachments and that, based on my inquiry of those individuals immediately responsible for obtaining the information, I believe that the information is true, accurate, and complete. I am aware that there are significant penalties for submitting false information, including the possibliity of fine and imprisonment. (Ref. 40 CFR § 144.32)

Name and Official Title *(Please type or print)*	Signature	Date Signed
Dan Johnson, VP - General Manager		10/3/2019

INSTRUCTIONS FOR FORM 7520-19

This form replaces forms 7520-12 and 7520-14. Use this form only when work is planned or has occurred that affects the well's construction or operation as an injection well, including work on the casing, tubing or packer (or for shallow Class V wells, the subsurface fluid emplacement network). Use one form per injection well. While reports or other information developed by contractors or service companies may be attached, this form must be signed by a responsible entity as described at 40 CFR 144.32. Note: operators closing Class V wells should use Form 7520-17.

NAME, ADDRESS, PHONE AND/OR EMAIL OF PERMITTEE: Enter the name and street address, city/town, state, and ZIP code of the permittee. Also provide an email address (if available) and/or a phone number.

PERMIT OR EPA ID NUMBER: Enter the well identification number or permit number assigned to the well by the EPA or the permitting authority.

API NUMBER: Enter the number assigned by the local jurisdiction (usually a State Oil and Gas Agency) using the American Petroleum Institute standard numbering system.

FULL WELL NAME: Enter the full name of the well or project.

Enter the **STATE** and **COUNTY** where the well is located. For States that do not have counties, use the name of that State's equivalent jurisdiction at a more local level.

WELL LOCATION: Fill in the complete township, range, and section to the nearest quarter-quarter section. A township is north or south of the baseline, and a range is east or west of the principal meridian (e.g., T12N, R34W). Also include the distance, in feet, from the nearest north or south line and nearest east or west line of the quarter-section. Also, enter the **latitude** and **longitude** of the well in decimal degrees, to five or six places if possible; be sure to include a negative sign for the longitude of a well in the Western Hemisphere and a negative sign for the latitude of a well in the Southern Hemisphere.

Enter the **WELL CLASS,** i.e., the class of injection well as defined in 40 CFR 144.6.

TIMING OF THE ACTION: Check ***Notice prior to work*** if the activity has not yet occurred (i.e., is planned). Check ***Report after work*** if the activity described has already occurred. As appropriate, include the date the activity is expected to start or the date the activity was completed. (Note this may not be available, e.g., for a plugging plan submitted with a permit application.)

TYPE OF ACTION: Check the appropriate box to describe the kind of activity being reported. Check ***Well Rework*** for work that was/will be performed on the well after it has already been in operation as an injection well. Check ***Plugging and Abandonment*** to report on plans for or descriptions of final closure/plugging after use as an injection well. Check ***Conversion to a Non-Injection Well*** if the well is to be converted to something other than an injection well.

Provide a **NARRATIVE DESCRIPTION** of the work planned to be performed, or that was performed. The narrative should include a description of the main procedures planned or that occurred during the work activity. A service company report, daily report, or similar document may be attached if it includes all the requested information and is clear and legible.

For well reworks, include the following information: The reason for the well rework; depths of activity; type of activity; changes to injection well configuration, well casing, or cement behind casing; any plug added to the well and its depth; any newly drilled interval and its depth; method(s) to demonstrate that the well has mechanical integrity (as applicable); and any deviations from the approved rework plan (as applicable).

For a well plugging plan, include the following information: Reason for the well plugging; number of plugs placed, and their depths; materials used as plugs (e.g., cast iron bridge plug, cement, cement retainer); method to set plugs; and wait-on-cement times, if any. Also provide one or more cost estimates from an independent firm in the business of plugging and abandoning wells to plug the well as described in the plan.

For well plugging affidavit, include the following information: Reason for the well plugging; number of plugs placed, and their depths; materials used as plugs (e.g., cast iron bridge plug, cement, cement retainer); method to set plugs; wait-on-cement times, if any; and any deviations from the approved plugging plan (if applicable).

For conversion to a non-injection well, include the following information: Depths of activity; type of activity; changes to injection well configuration, well casing, or cement behind casing; any plug added to the well and its depth; any newly drilled interval and its depth; depths of new perforations; and method(s) to demonstrate that the well has mechanical integrity (as applicable).

For all of the above activities, include a well sketch depicting the work, results of well tests/logging performed, service company tickets, and any other available information demonstrating how the work was/is to be performed. Also, specify whether depths are below ground surface, relative to Kelly bushing, etc.

CERTIFICATION: This form must be signed and dated by either: a responsible corporate officer for a corporation, by a general partner for a partnership, by the proprietor of a sole proprietorship, or by a principal executive or ranking elected official for a public agency.

PAPERWORK REDUCTION ACT NOTICE: The public reporting and recordkeeping burden for this collection of information is estimated to average between 6.0 and 7.9 hours per response, depending on the injection well class. Burden means the total time, effort, or financial resource expended by persons to generate, maintain, retain, or disclose or provide information to or for a Federal Agency. This includes the time needed to review instructions; develop, acquire, install, and utilize technology and systems for the purposes of collecting, validating, and verifying information, processing and maintaining information, and disclosing and providing information; adjust the existing ways to comply with any previously applicable instructions and requirements; train personnel to be able to respond to the collection of information; search data sources; complete and review the collection of information; and, transmit or otherwise disclose the information. An agency may not conduct or sponsor, and a person is not required to respond to, a collection of information unless it displays a currently valid OMB control number. Send comments on the Agency's need for this information, the accuracy of the provided burden estimates, and any suggested methods for minimizing respondent burden, including the use of automated collection techniques to Director, Collection Strategies Division, U.S. Environmental Protection Agency (2822), 1200 Pennsylvania Ave., NW., Washington, D.C. 20460. Include the OMB control number in any correspondence. Do not send the completed forms to this address.

Drawing Name: G:\PROJECTS\CURIS RESOURCES\38706-CURIS FEASIBILITY\DRAWINGS\JULY 2014 UIC APP\BHP WELL SCHEMATICS\CH-1.DWG
Operator Name: CANDREVA, LAUREN Plot Date: August 5, 2014 Drawing Layout: HA-FIG-A-L

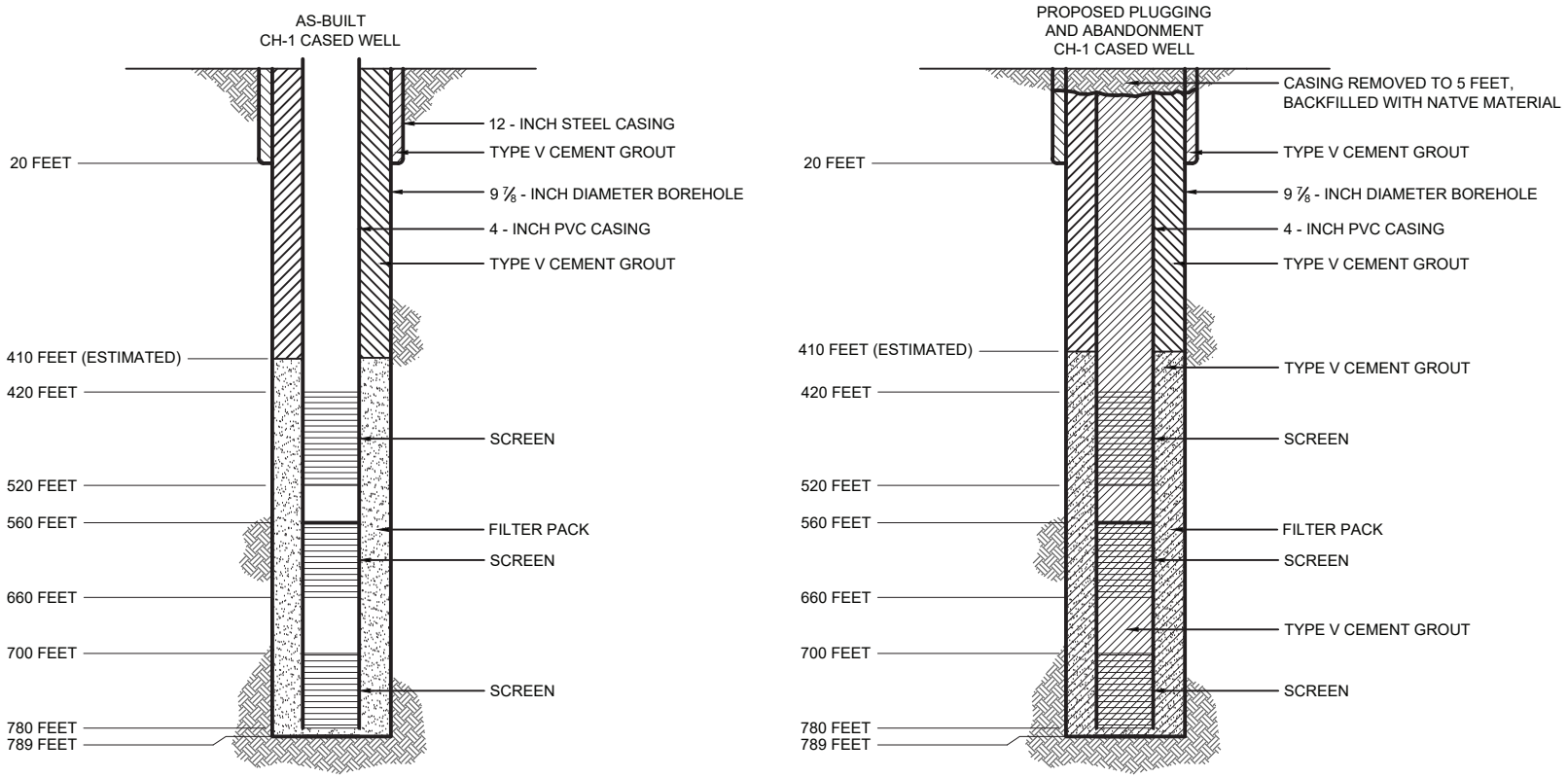

NOTE

WELL DESIGN DETAILS ARE BASED ON BHP RECORDS.

HALEY & ALDRICH

FLORENCE COPPER INC.
FLORENCE, ARIZONA

WELL CH-1 SCHEMATIC DIAGRAM

SCALE: AS SHOWN
JULY 2014

FIGURE 1

OMB No. 2040-0042 Approval Expires 4/30/2022

United States Environmental Protection Agency

WELL REWORK RECORD, PLUGGING AND ABANDONMENT PLAN, OR PLUGGING AND ABANDONMENT AFFIDAVIT

Name and Address, Phone Number and/or Email of Permittee

Florence Copper Project
1575 W Hunt Hwy,
Florence, AZ 85132

Permit or EPA ID Number	API Number	Full Well Name
R9UIC-AZ3-FY11-1		CH-2

State	County
Arizona	Pinal

Locate well in two directions from nearest lines of quarter section and drilling unit

Latitude 33.04695034

Longitude -111.4290737

Surface Location

SW **1/4 of** SE **1/4 of Section** 28 **Township** 4S **Range** 9E

400 **ft. from (N/S)** S **Line of quarter section**

470 **ft. from (E/W)** W **Line of quarter section.**

Well Class	Timing of Action (pick one)	Type of Action (pick one)
☐ Class I ☐ Class II ☑ Class III ☐ Class V	☑ Notice Prior to Work Date Expected to Commence March 2021 ☐ Report After Work Date Work Ended	☐ Well Rework ☑ Plugging and Abandonment ☐ Conversion to a Non-Injection Well

Provide a narrative description of the work planned to be performed, or that was performed. Use additional pages as necessary. See instructions.

A workover rig capable of performing the required abandonment operations at the required depths will be moved in and set up over the well. The well casing will be inspected to determine the depth to which the well remains open and if any obstructions are present in the casing; the presence and condition of any existing surface casing will also be documented. If necessary, the well casing will be cleaned out to the bottom of the deepest screen or perforation to enable placement of cement seals.
If surface casing is present, an attempt will be made to remove it. If removal of the surface casing is not feasible, it will be left in the hole and perforated as needed to allow an annular seal to be placed to a depth of at least 25 feet bgs. In areas of agricultural use, the surface casing will be cut at least 5 feet bgs and removed.
If the surface casing cannot be removed, it will be perforated from at least 20 feet below the bedrock-LBFU contact to at least 20 feet above the contact; from at least 20 feet below the base of the MFGU to at least 20 feet above the top of the MFGU; and from at least 25 feet bgs to 5 feet bgs.
A tremie pipe will be used to place Type V cement in the open well from the bottom of the well casing to the top of the well casing. Cement retainers, as described above, will be used to force cement grout into the annulus and behind perforated screen intervals, as necessary.
If the well casing has been obstructed, as much cement as possible will be placed from 100 feet below the LBFU-bedrock contact to the top of the casing.
The volume of Type V cement will be recorded and will not be less than the estimated volume of material required to fill each interval. All cement grout will consist of Type V cement, or equivalent approved in accordance with the UIC Permit.

Perforated Interval: 420 - 520, 560 - 660, 700 - 760 Feet

Certification

I certify under the penalty of law that I have personally examined and am familiar with the information submitted in this document and all attachments and that, based on my inquiry of those individuals immediately responsible for obtaining the information, I believe that the information is true, accurate, and complete. I am aware that there are significant penalties for submitting false information, including the possibliity of fine and imprisonment. (Ref. 40 CFR § 144.32)

Name and Official Title *(Please type or print)*	Signature	Date Signed
Dan Johnson, VP - General Manager		10/3/2019

INSTRUCTIONS FOR FORM 7520-19

This form replaces forms 7520-12 and 7520-14. Use this form only when work is planned or has occurred that affects the well's construction or operation as an injection well, including work on the casing, tubing or packer (or for shallow Class V wells, the subsurface fluid emplacement network). Use one form per injection well. While reports or other information developed by contractors or service companies may be attached, this form must be signed by a responsible entity as described at 40 CFR 144.32. Note: operators closing Class V wells should use Form 7520-17.

NAME, ADDRESS, PHONE AND/OR EMAIL OF PERMITTEE: Enter the name and street address, city/town, state, and ZIP code of the permittee. Also provide an email address (if available) and/or a phone number.

PERMIT OR EPA ID NUMBER: Enter the well identification number or permit number assigned to the well by the EPA or the permitting authority.

API NUMBER: Enter the number assigned by the local jurisdiction (usually a State Oil and Gas Agency) using the American Petroleum Institute standard numbering system.

FULL WELL NAME: Enter the full name of the well or project.

Enter the **STATE** and **COUNTY** where the well is located. For States that do not have counties, use the name of that State's equivalent jurisdiction at a more local level.

WELL LOCATION: Fill in the complete township, range, and section to the nearest quarter-quarter section. A township is north or south of the baseline, and a range is east or west of the principal meridian (e.g., T12N, R34W). Also include the distance, in feet, from the nearest north or south line and nearest east or west line of the quarter-section. Also, enter the **latitude** and **longitude** of the well in decimal degrees, to five or six places if possible; be sure to include a negative sign for the longitude of a well in the Western Hemisphere and a negative sign for the latitude of a well in the Southern Hemisphere.

Enter the **WELL CLASS,** i.e., the class of injection well as defined in 40 CFR 144.6.

TIMING OF THE ACTION: Check ***Notice prior to work*** if the activity has not yet occurred (i.e., is planned). Check ***Report after work*** if the activity described has already occurred. As appropriate, include the date the activity is expected to start or the date the activity was completed. (Note this may not be available, e.g., for a plugging plan submitted with a permit application.)

TYPE OF ACTION: Check the appropriate box to describe the kind of activity being reported. Check ***Well Rework*** for work that was/will be performed on the well after it has already been in operation as an injection well. Check ***Plugging and Abandonment*** to report on plans for or descriptions of final closure/plugging after use as an injection well. Check ***Conversion to a Non-Injection Well*** if the well is to be converted to something other than an injection well.

Provide a **NARRATIVE DESCRIPTION** of the work planned to be performed, or that was performed. The narrative should include a description of the main procedures planned or that occurred during the work activity. A service company report, daily report, or similar document may be attached if it includes all the requested information and is clear and legible.

For well reworks, include the following information: The reason for the well rework; depths of activity; type of activity; changes to injection well configuration, well casing, or cement behind casing; any plug added to the well and its depth; any newly drilled interval and its depth; method(s) to demonstrate that the well has mechanical integrity (as applicable); and any deviations from the approved rework plan (as applicable).

For a well plugging plan, include the following information: Reason for the well plugging; number of plugs placed, and their depths; materials used as plugs (e.g., cast iron bridge plug, cement, cement retainer); method to set plugs; and wait-on-cement times, if any. Also provide one or more cost estimates from an independent firm in the business of plugging and abandoning wells to plug the well as described in the plan.

For well plugging affidavit, include the following information: Reason for the well plugging; number of plugs placed, and their depths; materials used as plugs (e.g., cast iron bridge plug, cement, cement retainer); method to set plugs; wait-on-cement times, if any; and any deviations from the approved plugging plan (if applicable).

For conversion to a non-injection well, include the following information: Depths of activity; type of activity; changes to injection well configuration, well casing, or cement behind casing; any plug added to the well and its depth; any newly drilled interval and its depth; depths of new perforations; and method(s) to demonstrate that the well has mechanical integrity (as applicable).

For all of the above activities, include a well sketch depicting the work, results of well tests/logging performed, service company tickets, and any other available information demonstrating how the work was/is to be performed. Also, specify whether depths are below ground surface, relative to Kelly bushing, etc.

CERTIFICATION: This form must be signed and dated by either: a responsible corporate officer for a corporation, by a general partner for a partnership, by the proprietor of a sole proprietorship, or by a principal executive or ranking elected official for a public agency.

PAPERWORK REDUCTION ACT NOTICE: The public reporting and recordkeeping burden for this collection of information is estimated to average between 6.0 and 7.9 hours per response, depending on the injection well class. Burden means the total time, effort, or financial resource expended by persons to generate, maintain, retain, or disclose or provide information to or for a Federal Agency. This includes the time needed to review instructions; develop, acquire, install, and utilize technology and systems for the purposes of collecting, validating, and verifying information, processing and maintaining information, and disclosing and providing information; adjust the existing ways to comply with any previously applicable instructions and requirements; train personnel to be able to respond to the collection of information; search data sources; complete and review the collection of information; and, transmit or otherwise disclose the information. An agency may not conduct or sponsor, and a person is not required to respond to, a collection of information unless it displays a currently valid OMB control number. Send comments on the Agency's need for this information, the accuracy of the provided burden estimates, and any suggested methods for minimizing respondent burden, including the use of automated collection techniques to Director, Collection Strategies Division, U.S. Environmental Protection Agency (2822), 1200 Pennsylvania Ave., NW., Washington, D.C. 20460. Include the OMB control number in any correspondence. Do not send the completed forms to this address.

Drawing Name: G:\PROJECTS\CURIS RESOURCES\38706-CURIS FEASIBILITY\DRAWINGS\JULY 2014 UIC APP\BHP WELL SCHEMATICS\CH-2.DWG
Operator Name: CANDREVA, LAUREN Plot Date: August 5, 2014 Drawing Layout: HA-FIG-A-L

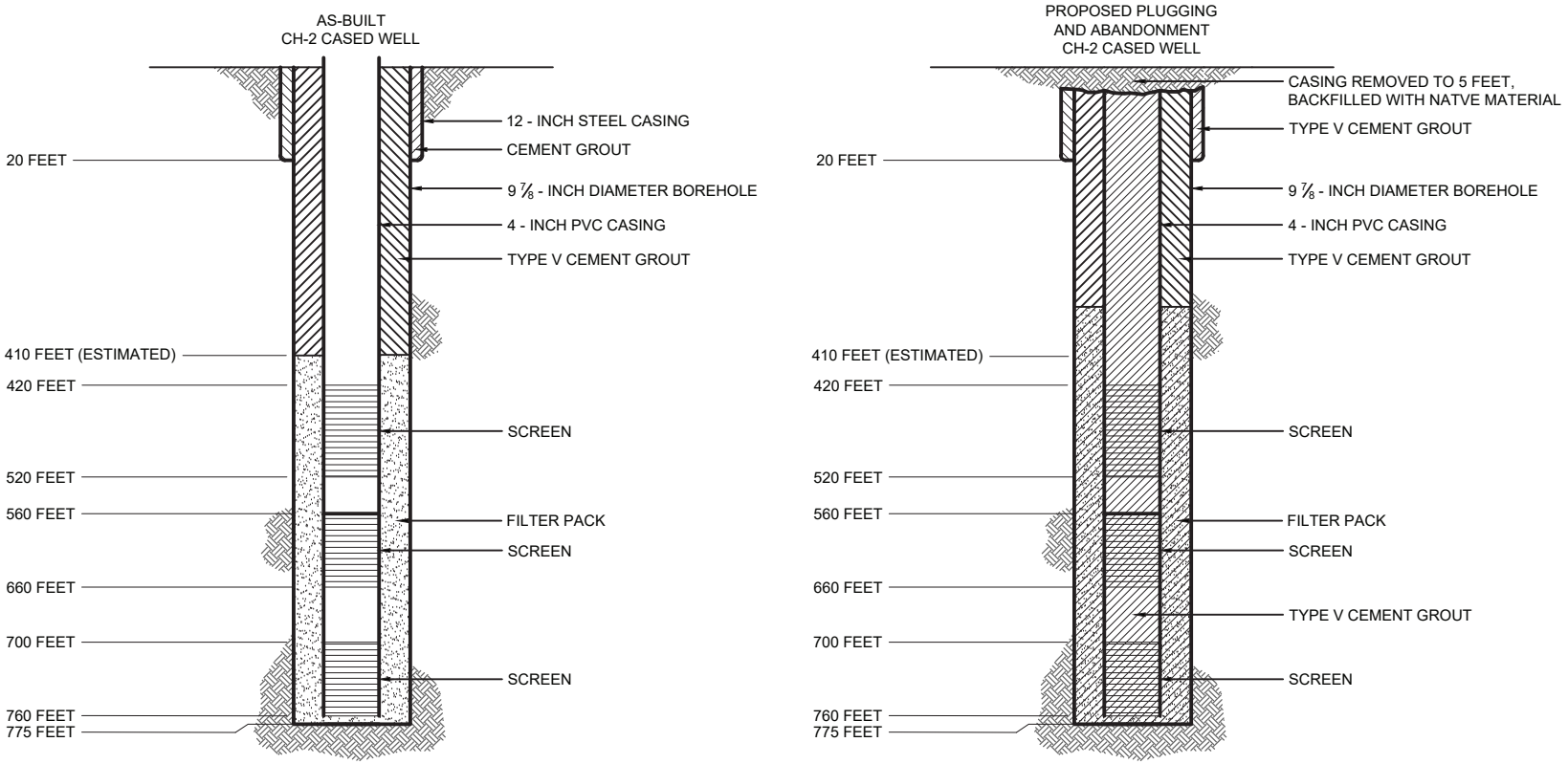

NOTE

WELL DESIGN DETAILS ARE BASED ON BHP RECORDS.

HALEY & ALDRICH

FLORENCE COPPER INC.
FLORENCE, ARIZONA

WELL CH-2 SCHEMATIC DIAGRAM

SCALE: AS SHOWN
JULY 2014

FIGURE 1

OMB No. 2040-0042 Approval Expires 4/30/2022

United States Environmental Protection Agency

WELL REWORK RECORD, PLUGGING AND ABANDONMENT PLAN, OR PLUGGING AND ABANDONMENT AFFIDAVIT

Name and Address, Phone Number and/or Email of Permittee

Florence Copper Project
1575 W Hunt Hwy,
Florence, AZ 85132

Permit or EPA ID Number	API Number	Full Well Name
R9UIC-AZ3-FY11-1		OWB-1

State	County
Arizona	Pinal

Locate well in two directions from nearest lines of quarter section and drilling unit

Latitude 33.04706497

Longitude -111.4288675

Surface Location

SW **1/4 of** SE **1/4 of Section** 28 **Township** 4S **Range** 9E

435 **ft. from (N/S)** S **Line of quarter section**

535 **ft. from (E/W)** W **Line of quarter section.**

Well Class	Timing of Action (pick one)	Type of Action (pick one)
☐ Class I ☐ Class II ☑ Class III ☐ Class V	☑ Notice Prior to Work Date Expected to Commence March 2021 ☐ Report After Work Date Work Ended	☐ Well Rework ☑ Plugging and Abandonment ☐ Conversion to a Non-Injection Well

Provide a narrative description of the work planned to be performed, or that was performed. Use additional pages as necessary. See instructions.

A workover rig capable of performing the required abandonment operations at the required depths will be moved in and set up over the well. The well casing will be inspected to determine the depth to which the well remains open and if any obstructions are present in the casing; the presence and condition of any existing surface casing will also be documented. If necessary, the well casing will be cleaned out to the bottom of the deepest screen or perforation to enable placement of cement seals.
If surface casing is present, an attempt will be made to remove it. If removal of the surface casing is not feasible, it will be left in the hole and perforated as needed to allow an annular seal to be placed to a depth of at least 25 feet bgs. In areas of agricultural use, the surface casing will be cut at least 5 feet bgs and removed.
If the surface casing cannot be removed, it will be perforated from at least 20 feet below the bedrock-LBFU contact to at least 20 feet above the contact; from at least 20 feet below the base of the MFGU to at least 20 feet above the top of the MFGU; and from at least 25 feet bgs to 5 feet bgs.
A tremie pipe will be used to place Type V cement in the open well from the bottom of the well casing to the top of the well casing. Cement retainers, as described above, will be used to force cement grout into the annulus and behind perforated screen intervals, as necessary.
If the well casing has been obstructed, as much cement as possible will be placed from 100 feet below the LBFU-bedrock contact to the top of the casing.
The volume of Type V cement will be recorded and will not be less than the estimated volume of material required to fill each interval. All cement grout will consist of Type V cement, or equivalent approved in accordance with the UIC Permit.

Perforated Interval: 420 - 795 Feet

Certification

I certify under the penalty of law that I have personally examined and am familiar with the information submitted in this document and all attachments and that, based on my inquiry of those individuals immediately responsible for obtaining the information, I believe that the information is true, accurate, and complete. I am aware that there are significant penalties for submitting false information, including the possibliity of fine and imprisonment. (Ref. 40 CFR § 144.32)

Name and Official Title *(Please type or print)*	Signature	Date Signed
Dan Johnson, VP - General Manager		10/3/2019

INSTRUCTIONS FOR FORM 7520-19

This form replaces forms 7520-12 and 7520-14. Use this form only when work is planned or has occurred that affects the well's construction or operation as an injection well, including work on the casing, tubing or packer (or for shallow Class V wells, the subsurface fluid emplacement network). Use one form per injection well. While reports or other information developed by contractors or service companies may be attached, this form must be signed by a responsible entity as described at 40 CFR 144.32. Note: operators closing Class V wells should use Form 7520-17.

NAME, ADDRESS, PHONE AND/OR EMAIL OF PERMITTEE: Enter the name and street address, city/town, state, and ZIP code of the permittee. Also provide an email address (if available) and/or a phone number.

PERMIT OR EPA ID NUMBER: Enter the well identification number or permit number assigned to the well by the EPA or the permitting authority.

API NUMBER: Enter the number assigned by the local jurisdiction (usually a State Oil and Gas Agency) using the American Petroleum Institute standard numbering system.

FULL WELL NAME: Enter the full name of the well or project.

Enter the **STATE** and **COUNTY** where the well is located. For States that do not have counties, use the name of that State's equivalent jurisdiction at a more local level.

WELL LOCATION: Fill in the complete township, range, and section to the nearest quarter-quarter section. A township is north or south of the baseline, and a range is east or west of the principal meridian (e.g., T12N, R34W). Also include the distance, in feet, from the nearest north or south line and nearest east or west line of the quarter-section. Also, enter the **latitude** and **longitude** of the well in decimal degrees, to five or six places if possible; be sure to include a negative sign for the longitude of a well in the Western Hemisphere and a negative sign for the latitude of a well in the Southern Hemisphere.

Enter the **WELL CLASS,** i.e., the class of injection well as defined in 40 CFR 144.6.

TIMING OF THE ACTION: Check ***Notice prior to work*** if the activity has not yet occurred (i.e., is planned). Check ***Report after work*** if the activity described has already occurred. As appropriate, include the date the activity is expected to start or the date the activity was completed. (Note this may not be available, e.g., for a plugging plan submitted with a permit application.)

TYPE OF ACTION: Check the appropriate box to describe the kind of activity being reported. Check ***Well Rework*** for work that was/will be performed on the well after it has already been in operation as an injection well. Check ***Plugging and Abandonment*** to report on plans for or descriptions of final closure/plugging after use as an injection well. Check ***Conversion to a Non-Injection Well*** if the well is to be converted to something other than an injection well.

Provide a **NARRATIVE DESCRIPTION** of the work planned to be performed, or that was performed. The narrative should include a description of the main procedures planned or that occurred during the work activity. A service company report, daily report, or similar document may be attached if it includes all the requested information and is clear and legible.

For well reworks, include the following information: The reason for the well rework; depths of activity; type of activity; changes to injection well configuration, well casing, or cement behind casing; any plug added to the well and its depth; any newly drilled interval and its depth; method(s) to demonstrate that the well has mechanical integrity (as applicable); and any deviations from the approved rework plan (as applicable).

For a well plugging plan, include the following information: Reason for the well plugging; number of plugs placed, and their depths; materials used as plugs (e.g., cast iron bridge plug, cement, cement retainer); method to set plugs; and wait-on-cement times, if any. Also provide one or more cost estimates from an independent firm in the business of plugging and abandoning wells to plug the well as described in the plan.

For well plugging affidavit, include the following information: Reason for the well plugging; number of plugs placed, and their depths; materials used as plugs (e.g., cast iron bridge plug, cement, cement retainer); method to set plugs; wait-on-cement times, if any; and any deviations from the approved plugging plan (if applicable).

For conversion to a non-injection well, include the following information: Depths of activity; type of activity; changes to injection well configuration, well casing, or cement behind casing; any plug added to the well and its depth; any newly drilled interval and its depth; depths of new perforations; and method(s) to demonstrate that the well has mechanical integrity (as applicable).

For all of the above activities, include a well sketch depicting the work, results of well tests/logging performed, service company tickets, and any other available information demonstrating how the work was/is to be performed. Also, specify whether depths are below ground surface, relative to Kelly bushing, etc.

CERTIFICATION: This form must be signed and dated by either: a responsible corporate officer for a corporation, by a general partner for a partnership, by the proprietor of a sole proprietorship, or by a principal executive or ranking elected official for a public agency.

PAPERWORK REDUCTION ACT NOTICE: The public reporting and recordkeeping burden for this collection of information is estimated to average between 6.0 and 7.9 hours per response, depending on the injection well class. Burden means the total time, effort, or financial resource expended by persons to generate, maintain, retain, or disclose or provide information to or for a Federal Agency. This includes the time needed to review instructions; develop, acquire, install, and utilize technology and systems for the purposes of collecting, validating, and verifying information, processing and maintaining information, and disclosing and providing information; adjust the existing ways to comply with any previously applicable instructions and requirements; train personnel to be able to respond to the collection of information; search data sources; complete and review the collection of information; and, transmit or otherwise disclose the information. An agency may not conduct or sponsor, and a person is not required to respond to, a collection of information unless it displays a currently valid OMB control number. Send comments on the Agency's need for this information, the accuracy of the provided burden estimates, and any suggested methods for minimizing respondent burden, including the use of automated collection techniques to Director, Collection Strategies Division, U.S. Environmental Protection Agency (2822), 1200 Pennsylvania Ave., NW., Washington, D.C. 20460. Include the OMB control number in any correspondence. Do not send the completed forms to this address.

Drawing Name: G:\PROJECTS\CURIS RESOURCES\38706-CURIS FEASIBILITY\DRAWINGS\JULY 2014 UIC APP\BHP WELL SCHEMATICS\OWB-1.DWG
Operator Name: CANDREVA, LAUREN Plot Date: August 5, 2014 Drawing Layout: HA-FIG-A-L

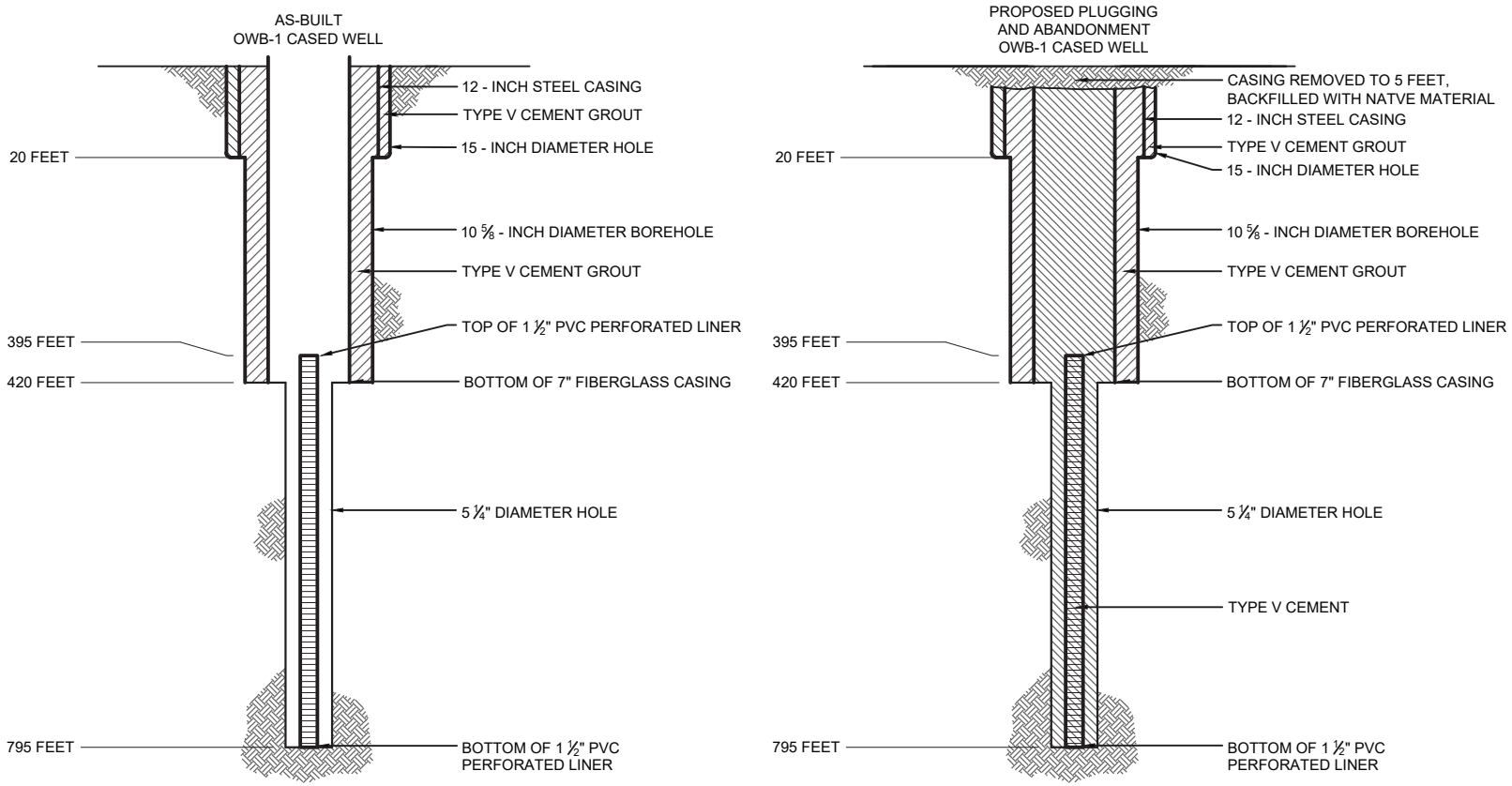

NOTE

WELL DESIGN DETAILS ARE BASED ON BHP RECORDS.

HALEY & ALDRICH

FLORENCE COPPER INC.
FLORENCE, ARIZONA

WELL OWB-1 SCHEMATIC DIAGRAM

SCALE: AS SHOWN
JULY 2014

FIGURE 1

OMB No. 2040-0042 Approval Expires 4/30/2022

United States Environmental Protection Agency

WELL REWORK RECORD, PLUGGING AND ABANDONMENT PLAN, OR PLUGGING AND ABANDONMENT AFFIDAVIT

Name and Address, Phone Number and/or Email of Permittee

Florence Copper Project
1575 W Hunt Hwy,
Florence, AZ 85132

Permit or EPA ID Number	API Number	Full Well Name
R9UIC-AZ3-FY11-1		OWB-2

State	County
Arizona	Pinal

Locate well in two directions from nearest lines of quarter section and drilling unit

Latitude 33.04720431

Surface Location

SW **1/4 of** SE **1/4 of Section** 28 **Township** 4S **Range** 9E

Longitude -111.4293562

490 **ft. from (N/S)** S **Line of quarter section**

385 **ft. from (E/W)** W **Line of quarter section.**

Well Class	Timing of Action (pick one)	Type of Action (pick one)
☐ Class I ☐ Class II ☑ Class III ☐ Class V	☑ Notice Prior to Work Date Expected to Commence March 2021 ☐ Report After Work Date Work Ended	☐ Well Rework ☑ Plugging and Abandonment ☐ Conversion to a Non-Injection Well

Provide a narrative description of the work planned to be performed, or that was performed. Use additional pages as necessary. See instructions.

A workover rig capable of performing the required abandonment operations at the required depths will be moved in and set up over the well. The well casing will be inspected to determine the depth to which the well remains open and if any obstructions are present in the casing; the presence and condition of any existing surface casing will also be documented. If necessary, the well casing will be cleaned out to the bottom of the deepest screen or perforation to enable placement of cement seals.
If surface casing is present, an attempt will be made to remove it. If removal of the surface casing is not feasible, it will be left in the hole and perforated as needed to allow an annular seal to be placed to a depth of at least 25 feet bgs. In areas of agricultural use, the surface casing will be cut at least 5 feet bgs and removed.
If the surface casing cannot be removed, it will be perforated from at least 20 feet below the bedrock-LBFU contact to at least 20 feet above the contact; from at least 20 feet below the base of the MFGU to at least 20 feet above the top of the MFGU; and from at least 25 feet bgs to 5 feet bgs.
A tremie pipe will be used to place Type V cement in the open well from the bottom of the well casing to the top of the well casing. Cement retainers, as described above, will be used to force cement grout into the annulus and behind perforated screen intervals, as necessary.
If the well casing has been obstructed, as much cement as possible will be placed from 100 feet below the LBFU-bedrock contact to the top of the casing.
The volume of Type V cement will be recorded and will not be less than the estimated volume of material required to fill each interval. All cement grout will consist of Type V cement, or equivalent approved in accordance with the UIC Permit.

Perforated Interval: 200 - 220 Feet

Certification

I certify under the penalty of law that I have personally examined and am familiar with the information submitted in this document and all attachments and that, based on my inquiry of those individuals immediately responsible for obtaining the information, I believe that the information is true, accurate, and complete. I am aware that there are significant penalties for submitting false information, including the possibliity of fine and imprisonment. (Ref. 40 CFR § 144.32)

Name and Official Title *(Please type or print)*	Signature	Date Signed
Dan Johnson, VP - General Manager		10/3/2019

INSTRUCTIONS FOR FORM 7520-19

This form replaces forms 7520-12 and 7520-14. Use this form only when work is planned or has occurred that affects the well's construction or operation as an injection well, including work on the casing, tubing or packer (or for shallow Class V wells, the subsurface fluid emplacement network). Use one form per injection well. While reports or other information developed by contractors or service companies may be attached, this form must be signed by a responsible entity as described at 40 CFR 144.32. Note: operators closing Class V wells should use Form 7520-17.

NAME, ADDRESS, PHONE AND/OR EMAIL OF PERMITTEE: Enter the name and street address, city/town, state, and ZIP code of the permittee. Also provide an email address (if available) and/or a phone number.

PERMIT OR EPA ID NUMBER: Enter the well identification number or permit number assigned to the well by the EPA or the permitting authority.

API NUMBER: Enter the number assigned by the local jurisdiction (usually a State Oil and Gas Agency) using the American Petroleum Institute standard numbering system.

FULL WELL NAME: Enter the full name of the well or project.

Enter the **STATE** and **COUNTY** where the well is located. For States that do not have counties, use the name of that State's equivalent jurisdiction at a more local level.

WELL LOCATION: Fill in the complete township, range, and section to the nearest quarter-quarter section. A township is north or south of the baseline, and a range is east or west of the principal meridian (e.g., T12N, R34W). Also include the distance, in feet, from the nearest north or south line and nearest east or west line of the quarter-section. Also, enter the **latitude** and **longitude** of the well in decimal degrees, to five or six places if possible; be sure to include a negative sign for the longitude of a well in the Western Hemisphere and a negative sign for the latitude of a well in the Southern Hemisphere.

Enter the **WELL CLASS,** i.e., the class of injection well as defined in 40 CFR 144.6.

TIMING OF THE ACTION: Check ***Notice prior to work*** if the activity has not yet occurred (i.e., is planned). Check ***Report after work*** if the activity described has already occurred. As appropriate, include the date the activity is expected to start or the date the activity was completed. (Note this may not be available, e.g., for a plugging plan submitted with a permit application.)

TYPE OF ACTION: Check the appropriate box to describe the kind of activity being reported. Check ***Well Rework*** for work that was/will be performed on the well after it has already been in operation as an injection well. Check ***Plugging and Abandonment*** to report on plans for or descriptions of final closure/plugging after use as an injection well. Check ***Conversion to a Non-Injection Well*** if the well is to be converted to something other than an injection well.

Provide a **NARRATIVE DESCRIPTION** of the work planned to be performed, or that was performed. The narrative should include a description of the main procedures planned or that occurred during the work activity. A service company report, daily report, or similar document may be attached if it includes all the requested information and is clear and legible.

For well reworks, include the following information: The reason for the well rework; depths of activity; type of activity; changes to injection well configuration, well casing, or cement behind casing; any plug added to the well and its depth; any newly drilled interval and its depth; method(s) to demonstrate that the well has mechanical integrity (as applicable); and any deviations from the approved rework plan (as applicable).

For a well plugging plan, include the following information: Reason for the well plugging; number of plugs placed, and their depths; materials used as plugs (e.g., cast iron bridge plug, cement, cement retainer); method to set plugs; and wait-on-cement times, if any. Also provide one or more cost estimates from an independent firm in the business of plugging and abandoning wells to plug the well as described in the plan.

For well plugging affidavit, include the following information: Reason for the well plugging; number of plugs placed, and their depths; materials used as plugs (e.g., cast iron bridge plug, cement, cement retainer); method to set plugs; wait-on-cement times, if any; and any deviations from the approved plugging plan (if applicable).

For conversion to a non-injection well, include the following information: Depths of activity; type of activity; changes to injection well configuration, well casing, or cement behind casing; any plug added to the well and its depth; any newly drilled interval and its depth; depths of new perforations; and method(s) to demonstrate that the well has mechanical integrity (as applicable).

For all of the above activities, include a well sketch depicting the work, results of well tests/logging performed, service company tickets, and any other available information demonstrating how the work was/is to be performed. Also, specify whether depths are below ground surface, relative to Kelly bushing, etc.

CERTIFICATION: This form must be signed and dated by either: a responsible corporate officer for a corporation, by a general partner for a partnership, by the proprietor of a sole proprietorship, or by a principal executive or ranking elected official for a public agency.

PAPERWORK REDUCTION ACT NOTICE: The public reporting and recordkeeping burden for this collection of information is estimated to average between 6.0 and 7.9 hours per response, depending on the injection well class. Burden means the total time, effort, or financial resource expended by persons to generate, maintain, retain, or disclose or provide information to or for a Federal Agency. This includes the time needed to review instructions; develop, acquire, install, and utilize technology and systems for the purposes of collecting, validating, and verifying information, processing and maintaining information, and disclosing and providing information; adjust the existing ways to comply with any previously applicable instructions and requirements; train personnel to be able to respond to the collection of information; search data sources; complete and review the collection of information; and, transmit or otherwise disclose the information. An agency may not conduct or sponsor, and a person is not required to respond to, a collection of information unless it displays a currently valid OMB control number. Send comments on the Agency's need for this information, the accuracy of the provided burden estimates, and any suggested methods for minimizing respondent burden, including the use of automated collection techniques to Director, Collection Strategies Division, U.S. Environmental Protection Agency (2822), 1200 Pennsylvania Ave., NW., Washington, D.C. 20460. Include the OMB control number in any correspondence. Do not send the completed forms to this address.

Drawing Name: G:\PROJECTS\CURIS RESOURCES\38706-CURIS FEASIBILITY\DRAWINGS\JULY 2014 UIC APP\BHP WELL SCHEMATICS\OWB-2.DWG
Operator Name: CANDREVA, LAUREN Plot Date: August 5, 2014 Drawing Layout: HA-FIG-A-L

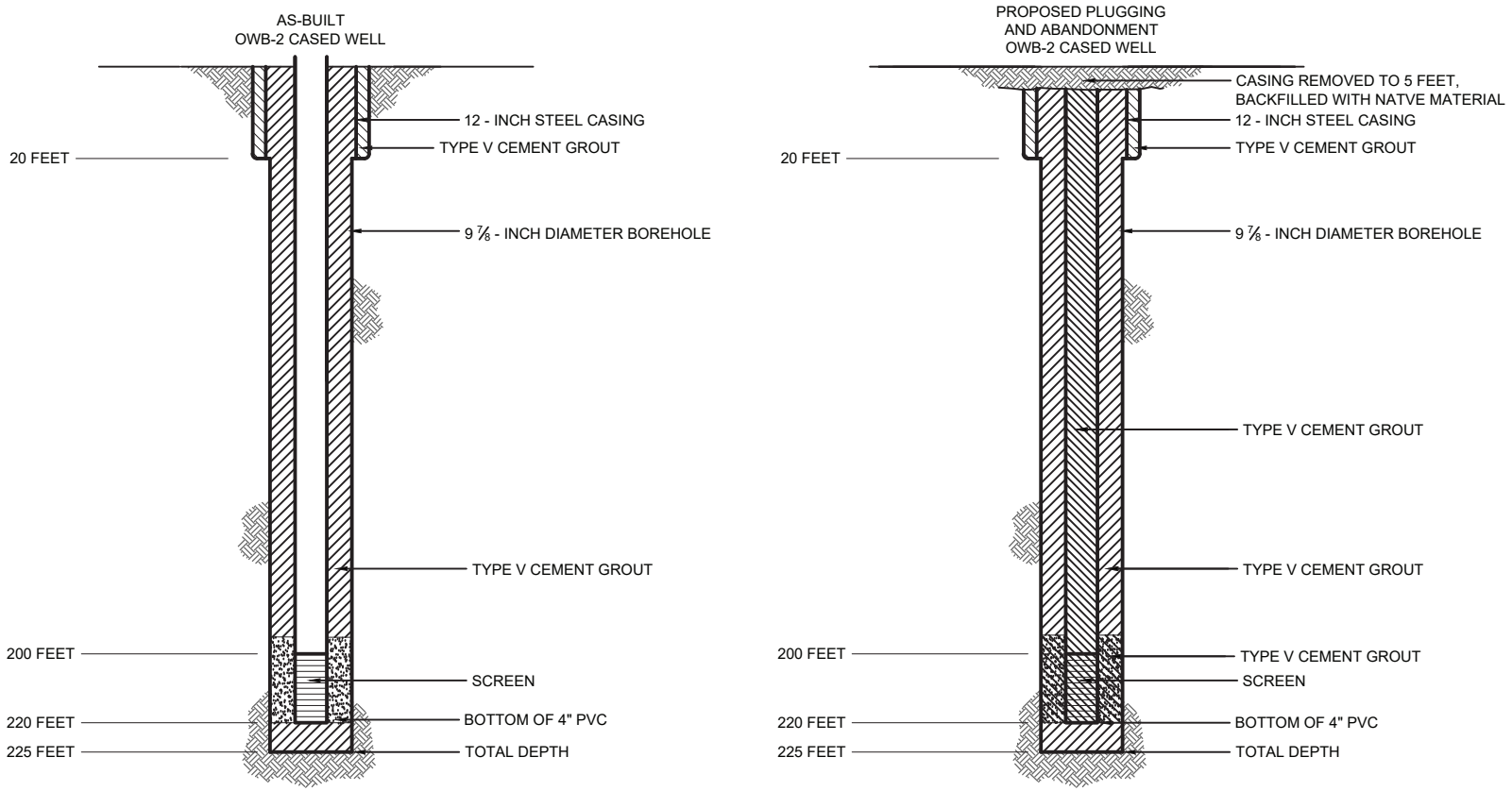

NOTE

WELL DESIGN DETAILS ARE BASED ON BHP RECORDS.

HALEY & ALDRICH

FLORENCE COPPER INC.
FLORENCE, ARIZONA

WELL OWB-2 SCHEMATIC DIAGRAM

SCALE: AS SHOWN
JULY 2014

FIGURE 1

OMB No. 2040-0042 Approval Expires 4/30/2022

United States Environmental Protection Agency

WELL REWORK RECORD, PLUGGING AND ABANDONMENT PLAN, OR PLUGGING AND ABANDONMENT AFFIDAVIT

Name and Address, Phone Number and/or Email of Permittee

Florence Copper Project
1575 W Hunt Hwy,
Florence, AZ 85132

Permit or EPA ID Number	API Number	Full Well Name
R9UIC-AZ3-FY11-1		OWB-3

State	County
Arizona	Pinal

Locate well in two directions from nearest lines of quarter section and drilling unit

Latitude 33.04706752

Longitude -111.4295202

Surface Location

SW **1/4 of** SE **1/4 of Section** 28 **Township** 4S **Range** 9E

440 **ft. from (N/S)** S **Line of quarter section**

335 **ft. from (E/W)** W **Line of quarter section.**

Well Class	Timing of Action (pick one)	Type of Action (pick one)
☐ Class I ☐ Class II ☑ Class III ☐ Class V	☑ Notice Prior to Work Date Expected to Commence March 2021 ☐ Report After Work Date Work Ended	☐ Well Rework ☑ Plugging and Abandonment ☐ Conversion to a Non-Injection Well

Provide a narrative description of the work planned to be performed, or that was performed. Use additional pages as necessary. See instructions.

A workover rig capable of performing the required abandonment operations at the required depths will be moved in and set up over the well. The well casing will be inspected to determine the depth to which the well remains open and if any obstructions are present in the casing; the presence and condition of any existing surface casing will also be documented. If necessary, the well casing will be cleaned out to the bottom of the deepest screen or perforation to enable placement of cement seals.
If surface casing is present, an attempt will be made to remove it. If removal of the surface casing is not feasible, it will be left in the hole and perforated as needed to allow an annular seal to be placed to a depth of at least 25 feet bgs. In areas of agricultural use, the surface casing will be cut at least 5 feet bgs and removed.
If the surface casing cannot be removed, it will be perforated from at least 20 feet below the bedrock-LBFU contact to at least 20 feet above the contact; from at least 20 feet below the base of the MFGU to at least 20 feet above the top of the MFGU; and from at least 25 feet bgs to 5 feet bgs.
A tremie pipe will be used to place Type V cement in the open well from the bottom of the well casing to the top of the well casing. Cement retainers, as described above, will be used to force cement grout into the annulus and behind perforated screen intervals, as necessary.
If the well casing has been obstructed, as much cement as possible will be placed from 100 feet below the LBFU-bedrock contact to the top of the casing.
The volume of Type V cement will be recorded and will not be less than the estimated volume of material required to fill each interval. All cement grout will consist of Type V cement, or equivalent approved in accordance with the UIC Permit.

Perforated Interval: 420 - 796 Feet

Certification

I certify under the penalty of law that I have personally examined and am familiar with the information submitted in this document and all attachments and that, based on my inquiry of those individuals immediately responsible for obtaining the information, I believe that the information is true, accurate, and complete. I am aware that there are significant penalties for submitting false information, including the possibliity of fine and imprisonment. (Ref. 40 CFR § 144.32)

Name and Official Title *(Please type or print)*	Signature	Date Signed
Dan Johnson, VP - General Manager		10/3/2019

INSTRUCTIONS FOR FORM 7520-19

This form replaces forms 7520-12 and 7520-14. Use this form only when work is planned or has occurred that affects the well's construction or operation as an injection well, including work on the casing, tubing or packer (or for shallow Class V wells, the subsurface fluid emplacement network). Use one form per injection well. While reports or other information developed by contractors or service companies may be attached, this form must be signed by a responsible entity as described at 40 CFR 144.32. Note: operators closing Class V wells should use Form 7520-17.

NAME, ADDRESS, PHONE AND/OR EMAIL OF PERMITTEE: Enter the name and street address, city/town, state, and ZIP code of the permittee. Also provide an email address (if available) and/or a phone number.

PERMIT OR EPA ID NUMBER: Enter the well identification number or permit number assigned to the well by the EPA or the permitting authority.

API NUMBER: Enter the number assigned by the local jurisdiction (usually a State Oil and Gas Agency) using the American Petroleum Institute standard numbering system.

FULL WELL NAME: Enter the full name of the well or project.

Enter the **STATE** and **COUNTY** where the well is located. For States that do not have counties, use the name of that State's equivalent jurisdiction at a more local level.

WELL LOCATION: Fill in the complete township, range, and section to the nearest quarter-quarter section. A township is north or south of the baseline, and a range is east or west of the principal meridian (e.g., T12N, R34W). Also include the distance, in feet, from the nearest north or south line and nearest east or west line of the quarter-section. Also, enter the **latitude** and **longitude** of the well in decimal degrees, to five or six places if possible; be sure to include a negative sign for the longitude of a well in the Western Hemisphere and a negative sign for the latitude of a well in the Southern Hemisphere.

Enter the **WELL CLASS,** i.e., the class of injection well as defined in 40 CFR 144.6.

TIMING OF THE ACTION: Check ***Notice prior to work*** if the activity has not yet occurred (i.e., is planned). Check ***Report after work*** if the activity described has already occurred. As appropriate, include the date the activity is expected to start or the date the activity was completed. (Note this may not be available, e.g., for a plugging plan submitted with a permit application.)

TYPE OF ACTION: Check the appropriate box to describe the kind of activity being reported. Check ***Well Rework*** for work that was/will be performed on the well after it has already been in operation as an injection well. Check ***Plugging and Abandonment*** to report on plans for or descriptions of final closure/plugging after use as an injection well. Check ***Conversion to a Non-Injection Well*** if the well is to be converted to something other than an injection well.

Provide a **NARRATIVE DESCRIPTION** of the work planned to be performed, or that was performed. The narrative should include a description of the main procedures planned or that occurred during the work activity. A service company report, daily report, or similar document may be attached if it includes all the requested information and is clear and legible.

For well reworks, include the following information: The reason for the well rework; depths of activity; type of activity; changes to injection well configuration, well casing, or cement behind casing; any plug added to the well and its depth; any newly drilled interval and its depth; method(s) to demonstrate that the well has mechanical integrity (as applicable); and any deviations from the approved rework plan (as applicable).

For a well plugging plan, include the following information: Reason for the well plugging; number of plugs placed, and their depths; materials used as plugs (e.g., cast iron bridge plug, cement, cement retainer); method to set plugs; and wait-on-cement times, if any. Also provide one or more cost estimates from an independent firm in the business of plugging and abandoning wells to plug the well as described in the plan.

For well plugging affidavit, include the following information: Reason for the well plugging; number of plugs placed, and their depths; materials used as plugs (e.g., cast iron bridge plug, cement, cement retainer); method to set plugs; wait-on-cement times, if any; and any deviations from the approved plugging plan (if applicable).

For conversion to a non-injection well, include the following information: Depths of activity; type of activity; changes to injection well configuration, well casing, or cement behind casing; any plug added to the well and its depth; any newly drilled interval and its depth; depths of new perforations; and method(s) to demonstrate that the well has mechanical integrity (as applicable).

For all of the above activities, include a well sketch depicting the work, results of well tests/logging performed, service company tickets, and any other available information demonstrating how the work was/is to be performed. Also, specify whether depths are below ground surface, relative to Kelly bushing, etc.

CERTIFICATION: This form must be signed and dated by either: a responsible corporate officer for a corporation, by a general partner for a partnership, by the proprietor of a sole proprietorship, or by a principal executive or ranking elected official for a public agency.

PAPERWORK REDUCTION ACT NOTICE: The public reporting and recordkeeping burden for this collection of information is estimated to average between 6.0 and 7.9 hours per response, depending on the injection well class. Burden means the total time, effort, or financial resource expended by persons to generate, maintain, retain, or disclose or provide information to or for a Federal Agency. This includes the time needed to review instructions; develop, acquire, install, and utilize technology and systems for the purposes of collecting, validating, and verifying information, processing and maintaining information, and disclosing and providing information; adjust the existing ways to comply with any previously applicable instructions and requirements; train personnel to be able to respond to the collection of information; search data sources; complete and review the collection of information; and, transmit or otherwise disclose the information. An agency may not conduct or sponsor, and a person is not required to respond to, a collection of information unless it displays a currently valid OMB control number. Send comments on the Agency's need for this information, the accuracy of the provided burden estimates, and any suggested methods for minimizing respondent burden, including the use of automated collection techniques to Director, Collection Strategies Division, U.S. Environmental Protection Agency (2822), 1200 Pennsylvania Ave., NW., Washington, D.C. 20460. Include the OMB control number in any correspondence. Do not send the completed forms to this address.

Drawing Name: G:\PROJECTS\CURIS RESOURCES\38706-CURIS FEASIBILITY\DRAWINGS\JULY 2014 UIC APP\BHP WELL SCHEMATICS\OWB-3.DWG
Operator Name: CANDREVA, LAUREN Plot Date: August 5, 2014 Drawing Layout: HA-FIG-A-L

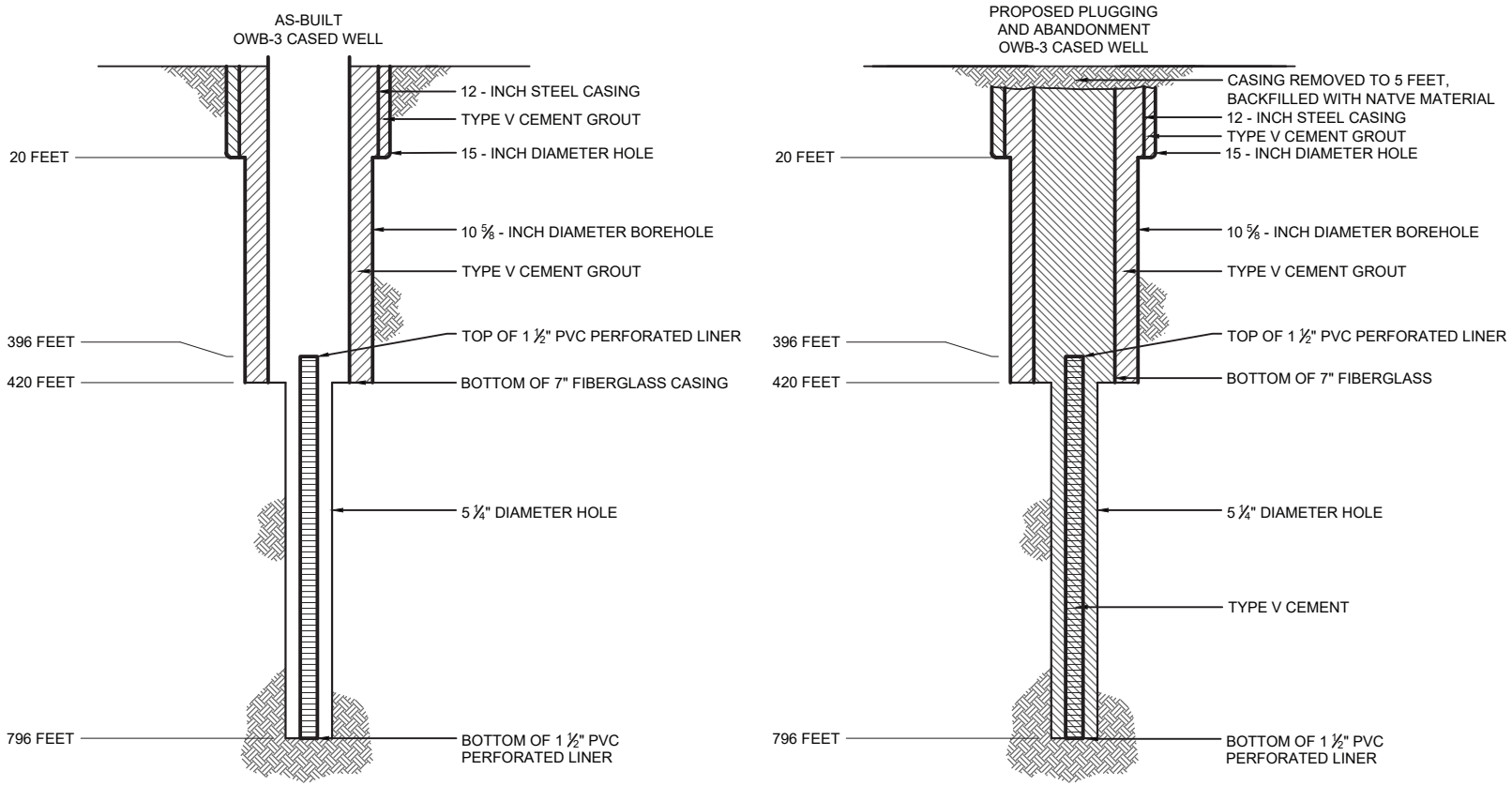

NOTE

WELL DESIGN DETAILS ARE BASED ON BHP RECORDS.

HALEY & ALDRICH

FLORENCE COPPER INC.
FLORENCE, ARIZONA

WELL OWB-3 SCHEMATIC DIAGRAM

SCALE: AS SHOWN
JULY 2014

FIGURE 1

OMB No. 2040-0042 Approval Expires 4/30/2022

United States Environmental Protection Agency

EPA

WELL REWORK RECORD, PLUGGING AND ABANDONMENT PLAN, OR PLUGGING AND ABANDONMENT AFFIDAVIT

Name and Address, Phone Number and/or Email of Permittee

Florence Copper Project
1575 W Hunt Hwy,
Florence, AZ 85132

Permit or EPA ID Number	API Number	Full Well Name
R9UIC-AZ3-FY11-1		OWB-4

State	County
Arizona	Pinal

Locate well in two directions from nearest lines of quarter section and drilling unit

Latitude 33.04678718

Longitude -111.429525

Surface Location

SW **1/4 of** SE **1/4 of Section** 28 **Township** 4S **Range** 9E

335 **ft. from (N/S)** S **Line of quarter section**

335 **ft. from (E/W)** W **Line of quarter section.**

Well Class	Timing of Action (pick one)	Type of Action (pick one)
☐ Class I ☐ Class II ☑ Class III ☐ Class V	☑ Notice Prior to Work Date Expected to Commence March 2021 ☐ Report After Work Date Work Ended	☐ Well Rework ☑ Plugging and Abandonment ☐ Conversion to a Non-Injection Well

Provide a narrative description of the work planned to be performed, or that was performed. Use additional pages as necessary. See instructions.

A workover rig capable of performing the required abandonment operations at the required depths will be moved in and set up over the well. The well casing will be inspected to determine the depth to which the well remains open and if any obstructions are present in the casing; the presence and condition of any existing surface casing will also be documented. If necessary, the well casing will be cleaned out to the bottom of the deepest screen or perforation to enable placement of cement seals.
If surface casing is present, an attempt will be made to remove it. If removal of the surface casing is not feasible, it will be left in the hole and perforated as needed to allow an annular seal to be placed to a depth of at least 25 feet bgs. In areas of agricultural use, the surface casing will be cut at least 5 feet bgs and removed.
If the surface casing cannot be removed, it will be perforated from at least 20 feet below the bedrock-LBFU contact to at least 20 feet above the contact; from at least 20 feet below the base of the MFGU to at least 20 feet above the top of the MFGU; and from at least 25 feet bgs to 5 feet bgs.
A tremie pipe will be used to place Type V cement in the open well from the bottom of the well casing to the top of the well casing. Cement retainers, as described above, will be used to force cement grout into the annulus and behind perforated screen intervals, as necessary.
If the well casing has been obstructed, as much cement as possible will be placed from 100 feet below the LBFU-bedrock contact to the top of the casing.
The volume of Type V cement will be recorded and will not be less than the estimated volume of material required to fill each interval. All cement grout will consist of Type V cement, or equivalent approved in accordance with the UIC Permit.

Perforated Interval: 410 - 745 Feet

Certification

I certify under the penalty of law that I have personally examined and am familiar with the information submitted in this document and all attachments and that, based on my inquiry of those individuals immediately responsible for obtaining the information, I believe that the information is true, accurate, and complete. I am aware that there are significant penalties for submitting false information, including the possibliity of fine and imprisonment. (Ref. 40 CFR § 144.32)

Name and Official Title *(Please type or print)*	Signature	Date Signed
Dan Johnson, VP - General Manager		10/3/2019

INSTRUCTIONS FOR FORM 7520-19

This form replaces forms 7520-12 and 7520-14. Use this form only when work is planned or has occurred that affects the well's construction or operation as an injection well, including work on the casing, tubing or packer (or for shallow Class V wells, the subsurface fluid emplacement network). Use one form per injection well. While reports or other information developed by contractors or service companies may be attached, this form must be signed by a responsible entity as described at 40 CFR 144.32. Note: operators closing Class V wells should use Form 7520-17.

NAME, ADDRESS, PHONE AND/OR EMAIL OF PERMITTEE: Enter the name and street address, city/town, state, and ZIP code of the permittee. Also provide an email address (if available) and/or a phone number.

PERMIT OR EPA ID NUMBER: Enter the well identification number or permit number assigned to the well by the EPA or the permitting authority.

API NUMBER: Enter the number assigned by the local jurisdiction (usually a State Oil and Gas Agency) using the American Petroleum Institute standard numbering system.

FULL WELL NAME: Enter the full name of the well or project.

Enter the **STATE** and **COUNTY** where the well is located. For States that do not have counties, use the name of that State's equivalent jurisdiction at a more local level.

WELL LOCATION: Fill in the complete township, range, and section to the nearest quarter-quarter section. A township is north or south of the baseline, and a range is east or west of the principal meridian (e.g., T12N, R34W). Also include the distance, in feet, from the nearest north or south line and nearest east or west line of the quarter-section. Also, enter the **latitude** and **longitude** of the well in decimal degrees, to five or six places if possible; be sure to include a negative sign for the longitude of a well in the Western Hemisphere and a negative sign for the latitude of a well in the Southern Hemisphere.

Enter the **WELL CLASS,** i.e., the class of injection well as defined in 40 CFR 144.6.

TIMING OF THE ACTION: Check ***Notice prior to work*** if the activity has not yet occurred (i.e., is planned). Check ***Report after work*** if the activity described has already occurred. As appropriate, include the date the activity is expected to start or the date the activity was completed. (Note this may not be available, e.g., for a plugging plan submitted with a permit application.)

TYPE OF ACTION: Check the appropriate box to describe the kind of activity being reported. Check ***Well Rework*** for work that was/will be performed on the well after it has already been in operation as an injection well. Check ***Plugging and Abandonment*** to report on plans for or descriptions of final closure/plugging after use as an injection well. Check ***Conversion to a Non-Injection Well*** if the well is to be converted to something other than an injection well.

Provide a **NARRATIVE DESCRIPTION** of the work planned to be performed, or that was performed. The narrative should include a description of the main procedures planned or that occurred during the work activity. A service company report, daily report, or similar document may be attached if it includes all the requested information and is clear and legible.

For well reworks, include the following information: The reason for the well rework; depths of activity; type of activity; changes to injection well configuration, well casing, or cement behind casing; any plug added to the well and its depth; any newly drilled interval and its depth; method(s) to demonstrate that the well has mechanical integrity (as applicable); and any deviations from the approved rework plan (as applicable).

For a well plugging plan, include the following information: Reason for the well plugging; number of plugs placed, and their depths; materials used as plugs (e.g., cast iron bridge plug, cement, cement retainer); method to set plugs; and wait-on-cement times, if any. Also provide one or more cost estimates from an independent firm in the business of plugging and abandoning wells to plug the well as described in the plan.

For well plugging affidavit, include the following information: Reason for the well plugging; number of plugs placed, and their depths; materials used as plugs (e.g., cast iron bridge plug, cement, cement retainer); method to set plugs; wait-on-cement times, if any; and any deviations from the approved plugging plan (if applicable).

For conversion to a non-injection well, include the following information: Depths of activity; type of activity; changes to injection well configuration, well casing, or cement behind casing; any plug added to the well and its depth; any newly drilled interval and its depth; depths of new perforations; and method(s) to demonstrate that the well has mechanical integrity (as applicable).

For all of the above activities, include a well sketch depicting the work, results of well tests/logging performed, service company tickets, and any other available information demonstrating how the work was/is to be performed. Also, specify whether depths are below ground surface, relative to Kelly bushing, etc.

CERTIFICATION: This form must be signed and dated by either: a responsible corporate officer for a corporation, by a general partner for a partnership, by the proprietor of a sole proprietorship, or by a principal executive or ranking elected official for a public agency.

PAPERWORK REDUCTION ACT NOTICE: The public reporting and recordkeeping burden for this collection of information is estimated to average between 6.0 and 7.9 hours per response, depending on the injection well class. Burden means the total time, effort, or financial resource expended by persons to generate, maintain, retain, or disclose or provide information to or for a Federal Agency. This includes the time needed to review instructions; develop, acquire, install, and utilize technology and systems for the purposes of collecting, validating, and verifying information, processing and maintaining information, and disclosing and providing information; adjust the existing ways to comply with any previously applicable instructions and requirements; train personnel to be able to respond to the collection of information; search data sources; complete and review the collection of information; and, transmit or otherwise disclose the information. An agency may not conduct or sponsor, and a person is not required to respond to, a collection of information unless it displays a currently valid OMB control number. Send comments on the Agency's need for this information, the accuracy of the provided burden estimates, and any suggested methods for minimizing respondent burden, including the use of automated collection techniques to Director, Collection Strategies Division, U.S. Environmental Protection Agency (2822), 1200 Pennsylvania Ave., NW., Washington, D.C. 20460. Include the OMB control number in any correspondence. Do not send the completed forms to this address.

Drawing Name: G:\PROJECTS\CURIS RESOURCES\38706-CURIS FEASIBILITY\DRAWINGS\JULY 2014 UIC APP\BHP WELL SCHEMATICS\OWB-4.DWG
Operator Name: CANDREVA, LAUREN Plot Date: August 5, 2014 Drawing Layout: HA-FIG-A-L

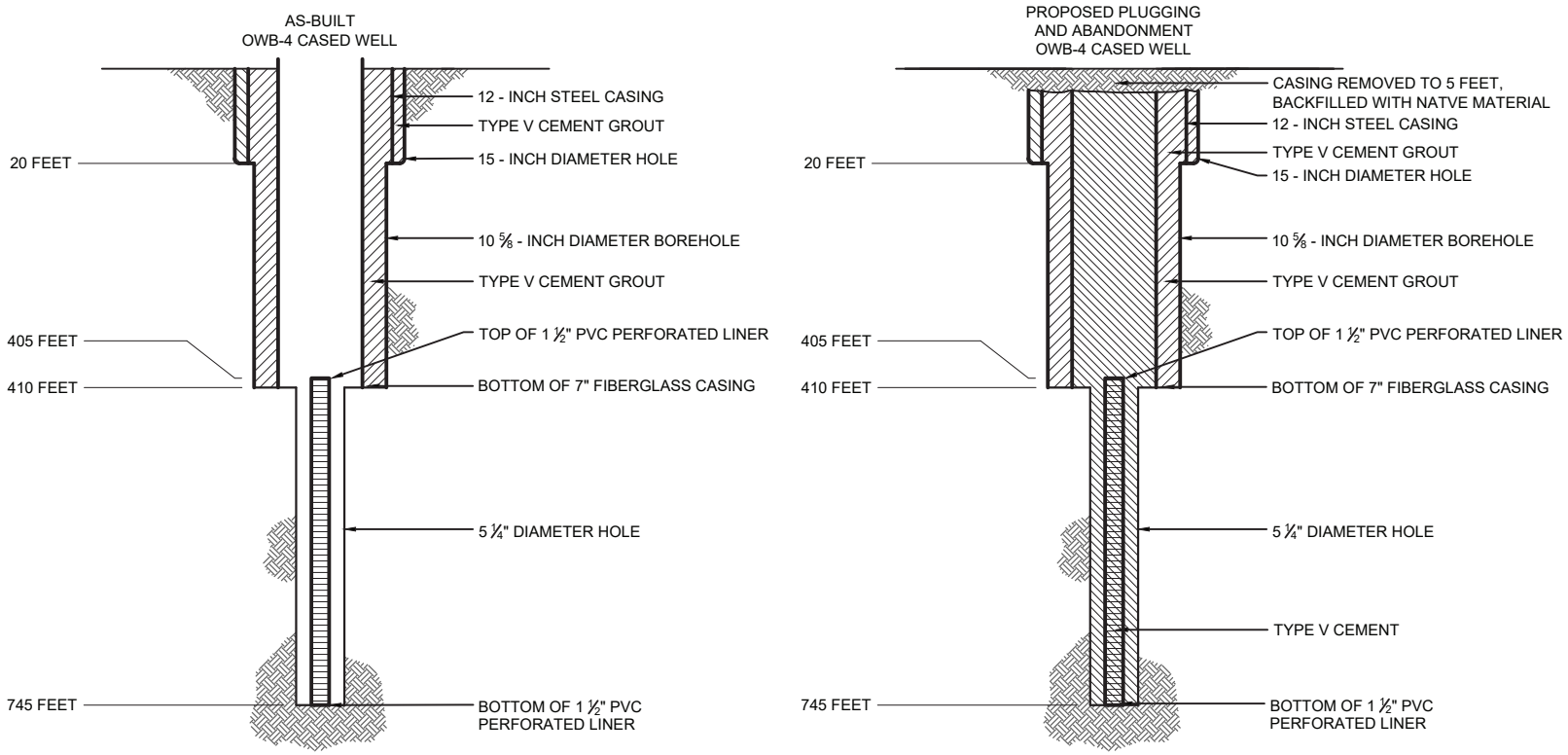

NOTE

WELL DESIGN DETAILS ARE BASED ON BHP RECORDS.

HALEY & ALDRICH

FLORENCE COPPER INC.
FLORENCE, ARIZONA

WELL OWB-4 SCHEMATIC DIAGRAM

SCALE: AS SHOWN
JULY 2014

FIGURE 1

OMB No. 2040-0042 Approval Expires 4/30/2022

United States Environmental Protection Agency

WELL REWORK RECORD, PLUGGING AND ABANDONMENT PLAN, OR PLUGGING AND ABANDONMENT AFFIDAVIT

Name and Address, Phone Number and/or Email of Permittee

Florence Copper Project
1575 W Hunt Hwy,
Florence, AZ 85132

Permit or EPA ID Number	API Number	Full Well Name
R9UIC-AZ3-FY11-1		OWB-5

State	County
Arizona	Pinal

Locate well in two directions from nearest lines of quarter section and drilling unit

Latitude 33.04678462

Surface Location

SW **1/4 of** SE **1/4 of Section** 28 **Township** 4S **Range** 9E

Longitude -111.428869

335 **ft. from (N/S)** S **Line of quarter section**

535 **ft. from (E/W)** W **Line of quarter section.**

Well Class	Timing of Action (pick one)	Type of Action (pick one)
☐ Class I ☐ Class II ☑ Class III ☐ Class V	☑ Notice Prior to Work Date Expected to Commence March 2021 ☐ Report After Work Date Work Ended	☐ Well Rework ☑ Plugging and Abandonment ☐ Conversion to a Non-Injection Well

Provide a narrative description of the work planned to be performed, or that was performed. Use additional pages as necessary. See instructions.

A workover rig capable of performing the required abandonment operations at the required depths will be moved in and set up over the well. The well casing will be inspected to determine the depth to which the well remains open and if any obstructions are present in the casing; the presence and condition of any existing surface casing will also be documented. If necessary, the well casing will be cleaned out to the bottom of the deepest screen or perforation to enable placement of cement seals.
If surface casing is present, an attempt will be made to remove it. If removal of the surface casing is not feasible, it will be left in the hole and perforated as needed to allow an annular seal to be placed to a depth of at least 25 feet bgs. In areas of agricultural use, the surface casing will be cut at least 5 feet bgs and removed.
If the surface casing cannot be removed, it will be perforated from at least 20 feet below the bedrock-LBFU contact to at least 20 feet above the contact; from at least 20 feet below the base of the MFGU to at least 20 feet above the top of the MFGU; and from at least 25 feet bgs to 5 feet bgs.
A tremie pipe will be used to place Type V cement in the open well from the bottom of the well casing to the top of the well casing. Cement retainers, as described above, will be used to force cement grout into the annulus and behind perforated screen intervals, as necessary.
If the well casing has been obstructed, as much cement as possible will be placed from 100 feet below the LBFU-bedrock contact to the top of the casing.
The volume of Type V cement will be recorded and will not be less than the estimated volume of material required to fill each interval. All cement grout will consist of Type V cement, or equivalent approved in accordance with the UIC Permit.

Perforated Interval: 420 - 765 Feet

Certification

I certify under the penalty of law that I have personally examined and am familiar with the information submitted in this document and all attachments and that, based on my inquiry of those individuals immediately responsible for obtaining the information, I believe that the information is true, accurate, and complete. I am aware that there are significant penalties for submitting false information, including the possibliity of fine and imprisonment. (Ref. 40 CFR § 144.32)

Name and Official Title *(Please type or print)*	Signature	Date Signed
Dan Johnson, VP - General Manager		10/3/2019

INSTRUCTIONS FOR FORM 7520-19

This form replaces forms 7520-12 and 7520-14. Use this form only when work is planned or has occurred that affects the well's construction or operation as an injection well, including work on the casing, tubing or packer (or for shallow Class V wells, the subsurface fluid emplacement network). Use one form per injection well. While reports or other information developed by contractors or service companies may be attached, this form must be signed by a responsible entity as described at 40 CFR 144.32. Note: operators closing Class V wells should use Form 7520-17.

NAME, ADDRESS, PHONE AND/OR EMAIL OF PERMITTEE: Enter the name and street address, city/town, state, and ZIP code of the permittee. Also provide an email address (if available) and/or a phone number.

PERMIT OR EPA ID NUMBER: Enter the well identification number or permit number assigned to the well by the EPA or the permitting authority.

API NUMBER: Enter the number assigned by the local jurisdiction (usually a State Oil and Gas Agency) using the American Petroleum Institute standard numbering system.

FULL WELL NAME: Enter the full name of the well or project.

Enter the **STATE** and **COUNTY** where the well is located. For States that do not have counties, use the name of that State's equivalent jurisdiction at a more local level.

WELL LOCATION: Fill in the complete township, range, and section to the nearest quarter-quarter section. A township is north or south of the baseline, and a range is east or west of the principal meridian (e.g., T12N, R34W). Also include the distance, in feet, from the nearest north or south line and nearest east or west line of the quarter-section. Also, enter the **latitude** and **longitude** of the well in decimal degrees, to five or six places if possible; be sure to include a negative sign for the longitude of a well in the Western Hemisphere and a negative sign for the latitude of a well in the Southern Hemisphere.

Enter the **WELL CLASS,** i.e., the class of injection well as defined in 40 CFR 144.6.

TIMING OF THE ACTION: Check ***Notice prior to work*** if the activity has not yet occurred (i.e., is planned). Check ***Report after work*** if the activity described has already occurred. As appropriate, include the date the activity is expected to start or the date the activity was completed. (Note this may not be available, e.g., for a plugging plan submitted with a permit application.)

TYPE OF ACTION: Check the appropriate box to describe the kind of activity being reported. Check ***Well Rework*** for work that was/will be performed on the well after it has already been in operation as an injection well. Check ***Plugging and Abandonment*** to report on plans for or descriptions of final closure/plugging after use as an injection well. Check ***Conversion to a Non-Injection Well*** if the well is to be converted to something other than an injection well.

Provide a **NARRATIVE DESCRIPTION** of the work planned to be performed, or that was performed. The narrative should include a description of the main procedures planned or that occurred during the work activity. A service company report, daily report, or similar document may be attached if it includes all the requested information and is clear and legible.

For well reworks, include the following information: The reason for the well rework; depths of activity; type of activity; changes to injection well configuration, well casing, or cement behind casing; any plug added to the well and its depth; any newly drilled interval and its depth; method(s) to demonstrate that the well has mechanical integrity (as applicable); and any deviations from the approved rework plan (as applicable).

For a well plugging plan, include the following information: Reason for the well plugging; number of plugs placed, and their depths; materials used as plugs (e.g., cast iron bridge plug, cement, cement retainer); method to set plugs; and wait-on-cement times, if any. Also provide one or more cost estimates from an independent firm in the business of plugging and abandoning wells to plug the well as described in the plan.

For well plugging affidavit, include the following information: Reason for the well plugging; number of plugs placed, and their depths; materials used as plugs (e.g., cast iron bridge plug, cement, cement retainer); method to set plugs; wait-on-cement times, if any; and any deviations from the approved plugging plan (if applicable).

For conversion to a non-injection well, include the following information: Depths of activity; type of activity; changes to injection well configuration, well casing, or cement behind casing; any plug added to the well and its depth; any newly drilled interval and its depth; depths of new perforations; and method(s) to demonstrate that the well has mechanical integrity (as applicable).

For all of the above activities, include a well sketch depicting the work, results of well tests/logging performed, service company tickets, and any other available information demonstrating how the work was/is to be performed. Also, specify whether depths are below ground surface, relative to Kelly bushing, etc.

CERTIFICATION: This form must be signed and dated by either: a responsible corporate officer for a corporation, by a general partner for a partnership, by the proprietor of a sole proprietorship, or by a principal executive or ranking elected official for a public agency.

PAPERWORK REDUCTION ACT NOTICE: The public reporting and recordkeeping burden for this collection of information is estimated to average between 6.0 and 7.9 hours per response, depending on the injection well class. Burden means the total time, effort, or financial resource expended by persons to generate, maintain, retain, or disclose or provide information to or for a Federal Agency. This includes the time needed to review instructions; develop, acquire, install, and utilize technology and systems for the purposes of collecting, validating, and verifying information, processing and maintaining information, and disclosing and providing information; adjust the existing ways to comply with any previously applicable instructions and requirements; train personnel to be able to respond to the collection of information; search data sources; complete and review the collection of information; and, transmit or otherwise disclose the information. An agency may not conduct or sponsor, and a person is not required to respond to, a collection of information unless it displays a currently valid OMB control number. Send comments on the Agency's need for this information, the accuracy of the provided burden estimates, and any suggested methods for minimizing respondent burden, including the use of automated collection techniques to Director, Collection Strategies Division, U.S. Environmental Protection Agency (2822), 1200 Pennsylvania Ave., NW., Washington, D.C. 20460. Include the OMB control number in any correspondence. Do not send the completed forms to this address.

Drawing Name: G:\PROJECTS\CURIS RESOURCES\38706-CURIS FEASIBILITY\DRAWINGS\JULY 2014 UIC APP\BHP WELL SCHEMATICS\OWB-5.DWG
Operator Name: CANDREVA, LAUREN Plot Date: August 5, 2014 Drawing Layout: HA-FIG-A-L

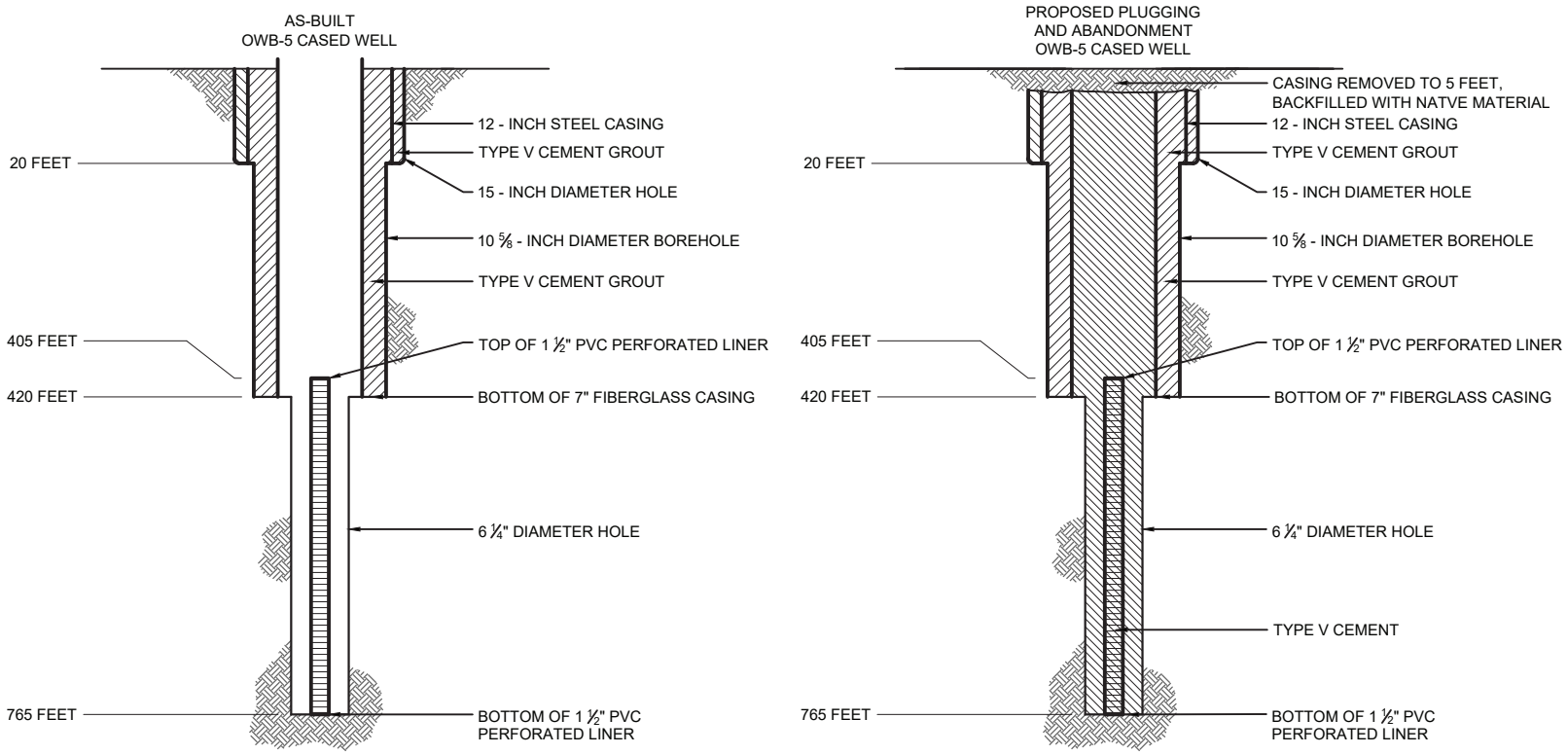

NOTE

WELL DESIGN DETAILS ARE BASED ON BHP RECORDS.

HALEY & ALDRICH

FLORENCE COPPER INC.
FLORENCE, ARIZONA

WELL OWB-5 SCHEMATIC DIAGRAM

SCALE: AS SHOWN
JULY 2014

FIGURE 1