FLORENCE COPPER, INC.

UIC PERMIT APPLICATION

FLORENCE COPPER PROJECT – PRODUCTION TEST FACILITY

ATTACHMENT P – MONITORING PROGRAM

Table of Contents

Table of Contents 1

List of Figures 1

List of Tables 1

List of Exhibits 2

P.1 Introduction 3

P.2 Injectate (Lixiviant) Fluid Monitoring 3

- P.2.1 Background Information 3
- P.2.2 Monitoring Organic Constituents in Injectate (Lixiviant) Solutions 4
- P.2.3 Monitoring Inorganic Constituents in Injectate (Lixiviant) Solutions 4

P.3 Monitoring of Injection Pressure and Flow Rates 4

P.4 Demonstration of Mechanical Integrity 5

P.5 Groundwater Monitoring 5

- P.5.1 Groundwater Quality Monitoring 5
- P.5.2 Hydraulic Control Monitoring 6
- P.5.3 Annular Conductivity Monitoring 6
- P.5.4 Demonstration of Hydraulic Control 6
- P.5.5 Injectate (Lixiviant) Solution Monitoring 6
- P.5.6 Mine Shaft Conductivity Monitoring 6

P.6 Manifold Monitoring 7

P.7 Reporting and Maintenance of Records 7

List of Figures

Figure P-1 Existing and Proposed Point of Compliance, Operational Monitoring, and Supplemental Monitoring Wells

List of Tables

Table P-1 Completion Intervals of Groundwater Monitoring Wells

Table P-2 Locations of Groundwater Monitoring Wells

Table P-3 Water Quality Parameters – Level 1

Table P-4 Water Quality Parameters – Level 2

Table P-5 Operational Monitoring Well Parameters (MW-01)

List of Exhibits

Exhibit P-1 Alert Levels

Exhibit P-2 Revised Figures Previously Provided with Comment Responses
- Revised Figure 11-1, Monitor Well Locations, Proposed Test Facility
- Revised Figure 11-2, Supplemental Monitoring Well M61-LBF Design
- Revised Figure 12-1, Supplemental Monitoring Well M57-O Design
- Revised Figure 12-2, Supplemental Monitoring Well M58-O Design
- Revised Figure 12-3, Supplemental Monitoring Well M59-O Design
- Revised Figure 12-4, Supplemental Monitoring Well M60-O Design
- Figure 18-2, Supplemental Monitoring Well M55-UBF Design
- Figure 18-3, Supplemental Monitoring Well M56-LBF Design
- Figure M1-1, Operational Monitoring Well MW-01 Proposed Design

P.1 Introduction

This Attachment has been prepared in support of an application (Application) by Florence Copper, Inc. (Florence Copper) to the United States Environmental Protection Agency (USEPA) for issuance of an Underground Injection Control Class III (Area) Permit (UIC Permit) for the planned Production Test Facility (PTF), to be located at the Florence Copper Project (FCP) in Pinal County, Arizona. Florence Copper is submitting this Application so that it may proceed with the development of the PTF to demonstrate the feasibility of a future full scale in-situ copper recovery (ISCR) facility. This Attachment describes the monitoring program that Florence Copper proposes to conduct in accordance with the monitoring requirements of 40 Code of Federal Regulations (CFR) 146.33(b).

The proposed monitoring program described in this Attachment applies to PTF operations. Elements of the proposed monitoring program closely track the requirements of UIC Permit No. AZ396000001 and will be described in the order of the requirements set forth in 40 CFR 146.33(b).

P.2 Injectate (Lixiviant) Fluid Monitoring

P.2.1 Background Information

40 CFR 146.31 describes regulatory criteria and standards applicable to Class III wells. Specific to characterizing injected fluids, Subsection 146.33(b)(1) requires a permittee to:

- Monitor the nature of injected fluid with sufficient frequency to yield representative data of fluid characteristics, and
- Obtain a new analysis whenever the injected fluid is modified to the extent that the existing analysis data is incorrect or incomplete.

40 CFR 146.34 describes information that the Director will consider in authorizing Class III wells. Subsection 146.34(a)(7)(iii) describes the operating data to be considered; specifically, for the permittee to provide a qualitative analysis and ranges in the concentrations of all constituents in the injected fluids.

The requirements related to injected fluids primarily apply to the acidified solutions injected into the oxide zone for the purpose of recovering copper. Florence Copper proposes that the term "lixiviant" be used to refer to raffinate that has been prepared for injection. Raffinate is the term generally used to describe pregnant leach solution (PLS) from which copper has been extracted in a solvent extraction/electrowinning (SX/EW) plant. It is sometimes referred to as "barren" PLS. The composition and constituent concentrations of PLS and raffinate are similar except that raffinate typically has 90 percent less copper and a lower pH than PLS.

The forecast lixiviant composition is presented in Attachment H of this Application. The forecast composition includes pH, total dissolved solids, and inorganic constituents. UIC Permit No. AZ396000001 prohibited the injection of fluids not described in the permit unless the permittee provides a 30-day advance notice of the proposed change in solutions and receives written approval for those changes from the USEPA. The permit also required a groundwater monitoring program that includes all the constituents in the injected fluid. The groundwater monitoring program will be expanded to include additional constituents approved by USEPA, when such approvals are granted.

Difficulties in forecasting the composition and concentrations of inorganic constituents in lixiviant solutions that can provide the certainty contemplated by the advance notice requirements are discussed in Attachment H of this Application. In particular, Section H.6 briefly describes two studies that were conducted to forecast ranges of inorganic constituent concentrations that can be expected throughout the life of PTF operations. As explained in Section H.6, the studies were limited because of the lack of data from site-specific PLS and raffinate generated from contact with the oxide zone for a long enough period of time to achieve equilibrium conditions. Such solutions are needed to complete the forecasts. One of the key objectives of PTF operations is to produce mature PLS and raffinate that can be used to obtain the necessary data.

Florence Copper anticipates sufficiently mature PLS and raffinate can be produced within 14 months after commencing PTF operations, and will continue PTF operations long enough to produce the needed data from sufficiently mature PLS and raffinate. Florence Copper will conduct an extensive sampling and analysis program during PTF operations to gather this information.

As explained in Section H.6 of Attachment H of this Application, the advance notice requirements are not as problematic for the organic constituents as they are for the inorganic constituents. The program for monitoring injected fluids is therefore divided into two components. The component for organic constituents will track existing requirements embodied in UIC Permit No. AZ396000001, whereas the component for inorganic constituents will focus on developing the data needed to forecast ranges of constituent concentrations during full-scale ISCR operations. The two components are described in Sections P.2.2 and P.2.3 in this Attachment.

The monitoring program will begin when operation of the PTF commences and PLS and raffinate begin to be generated. The monitoring program will continue throughout PTF operations.

P.2.2 Monitoring Organic Constituents in Injectate (Lixiviant) Solutions

Monthly monitoring of lixiviant solutions will be conducted for organic constituents. Because a type of kerosene is used in the SX/EW process, Florence Copper proposes to analyze the lixiviant solution for polynuclear aromatic hydrocarbons (PAHs). As stated in UIC Permit No. AZ396000001, the quarterly average of the total organic constituent concentration may not exceed 10 milligrams per liter (mg/L). The list of organic constituents will be expanded if other organic constituents are included in a change of lixiviant approved pursuant to the permit, or if other organic constituents are present or could be present in the raffinate.

P.2.3 Monitoring Inorganic Constituents in Injectate (Lixiviant) Solutions

During PTF operations, samples of PLS and any lixiviant solution produced via the operation of the temporary SX/EW plant will be collected and analyzed at least monthly for constituents listed in Table 3.1 of Exhibit H-1 of Attachment H. Once a sufficiently mature PLS is produced, the PLS data will be used in geochemical models to forecast constituent concentration ranges for PLS over the life of the future ISCR operations. The forecast ranges for PLS will then be used to develop forecast constituent concentration ranges in the lixiviant solution in accordance with 40 CFR 146.34(a)(7)(iii). A report will be submitted to USEPA which includes the sampling results, a discussion of the geochemical modeling, the results of the modeling, and the forecast composition and range of constituent concentrations for PLS, raffinate, and lixiviant solution.

P.3 Monitoring of Injection Pressure and Flow Rates

40 CFR 146.33(b)(2) requires semi-monthly monitoring of injection pressure and either flow rate or volume, or metering and daily recording of injected and recovered fluid volumes, as appropriate. Florence Copper will monitor injection flow rates and pressures in accordance with these requirements, and as described in detail in Attachment K of this Application. The procedures described in Attachment K include descriptions of equipment located at individual injection and recovery wells and the manifolds serving the wells to monitor flow rates and injection pressures. Injection pressure will also be monitored at each injection well head. Both injection and recovery well flow rates will be measured and recorded at least every 24 hours as part of procedures for monitoring hydraulic control. Monitoring of hydraulic control will be done by measuring and comparing total flows into and out of the injection zone. Those flow data will be recorded daily. Manifold pressures will be set to prevent allowable injection pressures from being exceeded and will be monitored daily to ensure that the allowable pressures are not exceeded.

Table 1 of Exhibit K-2 of Attachment K shows monitoring devices to be placed on injection and recovery wells, manifolds, tanks, and hydraulic control monitoring wells. For each device, the Table identifies contingency conditions and response actions. During PTF operations, monitoring may occur at wells in the event that manifolds are determined to be impractical for the small number of wells that will be operating.

P.4 Demonstration of Mechanical Integrity

Pursuant to 40 CFR 146.33(b)(3), the permittee is required to demonstrate mechanical integrity pursuant to 40 CFR 146.8 at least once every five years for certain wells. Mechanical integrity will be demonstrated before new injection or recovery wells are placed in service; at least once every five years; and any time that a workover is conducted, well construction is modified, or loss of integrity becomes obvious during operation. Annular conductivity monitoring will be conducted on a quarterly basis at observation and multi-level sampling wells. Both aspects of mechanical integrity testing and associated response procedures are described in Section O.3 of Attachment O of this Application.

P.5 Groundwater Monitoring

Pursuant to 40 CFR 146.33(b)(4), permittees are required to monitor fluid levels in the injection zone. Groundwater levels will be monitored as part of monitoring hydraulic control, as described in Attachment K of this Application. The remaining elements of the monitoring program are presented below.

P.5.1 Groundwater Quality Monitoring

As required by UIC Permit No. AZ396000001, quarterly and biennial samples have been collected since that permit came into effect, except during 2009 due to the financial difficulties of a prior owner.

In accordance with UIC Permit requirements, and requirements of Aquifer Protection Permit (APP) No. 106360, groundwater quality will be monitored at point-of-compliance (POC) wells. Figure P-1 shows the locations of the existing POC wells, the locations of approved (but not yet drilled) replacement and additional POC wells, and the locations of planned operational and supplemental monitoring wells. Replacement POC well M52-UBF is proposed to replace well M32-UBF, which is no longer functional because of the declining water table in the area. The well was specifically located to monitor for potential effects of the SX/EW plant and other surface facilities required for commercial operations proposed by BHP Copper in conjunction with UIC Permit No. AZ396000001. All of the POC wells proposed to monitor surface facilities during PTF operations are located outside the PTF well field area and outside of the requested area of review (AOR). Supplemental monitor wells requested by USEPA and the operational monitor well requested by ADEQ are located outside of the PTF well field area, and inside the requested AOR.

Selected additional figures are provided in Exhibit P-2. Figures included in Exhibit P-2 are identified as *Figure 11-1, Figure 11-2*, *Figures 12-1 through 12-4, and Figure M1-1* and depict POC, operational monitoring, and supplemental monitoring well locations and well construction details. USEPA has requested that these maps and figures also be provided in Exhibit P-2 for the reviewers' convenience.

Tables P-1 through P-4 provide details about Florence Copper's program for monitoring groundwater quality at POC wells, and Table P-5 provides details about monitoring groundwater quality at the operational monitoring well (MW-01) as required by Section 2.5.8 of APP No. 106360. Table P-1 shows the aquifer units in which the existing POC wells were completed and the location coordinates for each of the existing wells. Table P-2 shows the aquifer units in which the approved (but not yet constructed) POC wells, the operational monitoring well, and supplemental monitor wells are to be completed and the location coordinates for each well. Tables P-3 and P-4 show Aquifer Quality Limits (AQLs) and Alert Levels (ALs) for assessing groundwater quality sampled at POC and supplemental monitoring wells. Table P-3 lists Level 1 parameters (parameters that will be monitored quarterly), and Table P-4 lists Level 2 parameters (parameters that will be monitored semi-annually). The ALs and AQLs shown in Tables P-3 and P-4 are site-specific ALs and AQLs established by ADEQ and embodied in APP No. 106360 issued on September 28, 2012 and amended on July 5, 2013. The ALs and AQLs are listed in Tables 4.1-6 and 4.1-7 of APP No. 106360, which is included as Exhibit Q-1 of this Application. Exhibit P-1 of this Attachment describes the method by which ALs and AQLs have been determined for existing POC wells, and will be determined for the proposed POC wells. Table P-5 lists parameters and frequency of monitoring to be conducted at operational monitoring well MW-01 as defined and required by Section 2.5.8 of APP No. 106360.

The monitoring of Level 1 and 2 ALs for pH are shown in Tables P-3 and P-4 as being limited to field measurements because the hold time now required for valid pH measurements can only be met by measurements in the field.

P.5.2 Hydraulic Control Monitoring

Hydraulic control monitoring will be verified by measuring water levels at least daily at four locations approximately equidistant around the perimeter of the PTF well field. At each location, an observation well equipped with a pressure transducer will be paired with the nearest recovery or perimeter well, which will also be equipped with a pressure transducer. Hydraulic control will be assessed by measuring water levels in the paired wells. Hydraulic control will be deemed to exist if the water level in each observation well, located more distant from the PTF well field than the recovery wells, is higher than the water level in its paired recovery well.

P.5.3 Annular Conductivity Monitoring

Florence Copper will establish an annular conductivity baseline for each new Class III well equipped with polyvinyl chloride (PVC) or fiberglass reinforced plastic (FRP) outer casings before the well is used for multi-level sampling or water level observation. Wells constructed with PVC or FRP outer casing will not be used for injection, recovery, or hydraulic control pumping. Annular conductivity devices will not be installed on wells with steel outer casings. Additionally, Florence Copper will perform conductivity measurements at each such well quarterly thereafter, until the affected formation is closed in accordance with APP and UIC Permit requirements. Significant increases in conductivity over the last period of monitoring may be an indication of injected fluids migrating through the annular space. Annular conductivity monitoring and associated response procedures are described in Section O.3.1.2 of Attachment O of this Application.

P.5.4 Demonstration of Hydraulic Control

UIC Permit No. AZ396000001 required that hydraulic control be demonstrated during initial injection to verify the adequacy of hydraulic control. BHP Copper conducted a test for this purpose in late 1997 and early 1998. The test involved the injection and recovery of in-situ solutions in a test well field located at the FCP property. BHP Copper was able to demonstrate that hydraulic control could be maintained at all times with the use of wells installed and operated according to the same basic design as proposed by Florence Copper. During PTF operations, Florence Copper will monitor hydraulic control on a daily basis, and will take actions outlined in the Operations Plan to ensure that hydraulic control is maintained.

P.5.5 Injectate (Lixiviant) Solution Monitoring

Lixiviant solution monitoring will be performed as described in Section P.2 of this Attachment.

P.5.6 Mine Shaft Conductivity Monitoring

UIC Permit No. AZ396000001 required conductivity monitoring of water within an old mine shaft that was advanced by a previous owner of the FCP property. During PTF operations, no injection or recovery wells will be located within 500 feet of the shaft. The mine shaft is outside of the Area of Review described in Attachment A of this application. Florence Copper does not propose to monitor conductivity of mine shaft water during PTF operations.

P.6 Manifold Monitoring

As described in Section P.3 above, each injection and recovery well will be equipped with individual monitoring devices and controls connected to manifolds equipped with similar devices and controls. Fluid volumes and rates will be monitored and controlled at individual wells, and at the injection and recovery manifolds as described in the Operations Plan included in Exhibit K-2 of Attachment K of this Application.

P.7 Reporting and Maintenance of Records

Reporting of information obtained from the monitoring program described in this Attachment and the maintenance of related records will be in accordance with the requirements of the UIC Permit issued by USEPA for PTF operations. For consistency, Florence Copper proposes that the permit include the same or similar reporting and maintenance of records requirements as stipulated in UIC Permit No. AZ396000001.

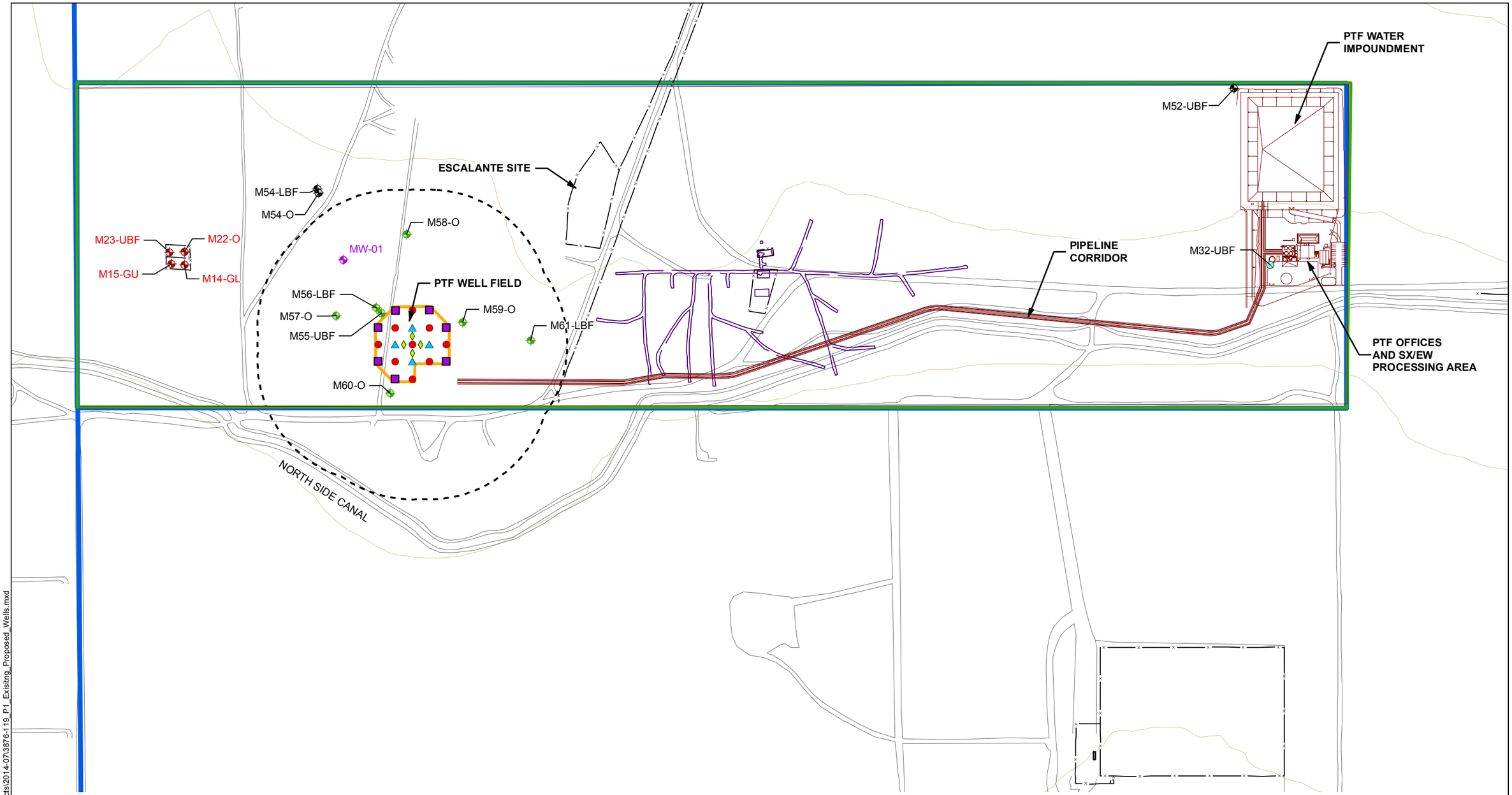

LEGEND

- MW-01 OPERATIONAL MONITORING WELL (APPROXIMATE LOCATION BASED ON REQUIREMENTS OF APP 106360)
- EXISTING PTF POC WELL
- DRY POC WELL TO BE PLUGGED AND ABANDONED
- APPROVED POC WELL - NOT DRILLED YET
- SUPPLEMENTAL MONITORING WELL

PROPOSED TEST WELLS

- INJECTION
- OBSERVATION
- RECOVERY
- MULTI-LEVEL SAMPLING WELL

- CONOCO UNDERGROUND MINE WORKINGS
- PTF WELL FIELD
- STATE MINERAL LEASE BOUNDARY
- PROPERTY BOUNDARY
- 500 FOOT AREA OF REVIEW
- CONTOUR (10 FT)

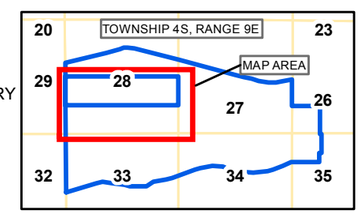

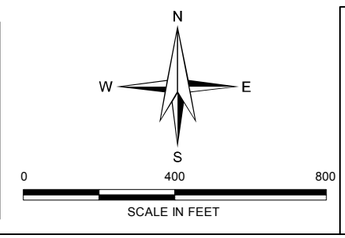

HALEY & ALDRICH

FLORENCE COPPER INC.
FLORENCE, ARIZONA

EXISTING AND PROPOSED POINT OF COMPLIANCE, OPERATIONAL MONITORING, AND SUPPLEMENTAL MONITORING WELLS

FLORENCE COPPER INC.

SCALE: AS SHOWN
JULY 2014

FIGURE P-1

G:\38706_CurisResources\Global\GIS\MapProjects\2014-07\3876-119_P1_Exsiting_Proposed_Wells.mxd

Table P-1. Existing POC Wells Proposed for Use in Conjuntion with the PTF

Well ID*	Screened Interval (feet)[b]	Screened Aquifer Unit	ADWR No.	Location Coordinates (Northing Easting)	Cadastral Coordinates	Total Depth (feet)[b]	Date Installed	Reference Point Elevation (feet)[a]	Land Elevation (feet)[a]
M14-GL	778-838	LBFU	55-549172	746461.52 N 846750.23 E	D(4-9)28cdc	859	6/2/95	1474.58	1473.2
M15-GU	554-594	LBFU	55-547813	746464.82 N 846697.174 E	D(4-9)28cbc	615	6/6/95	1474.01	1473.1
M22-O	932-1,130	Oxide	55-555831	746514.47 N 846751.26 E	D(4-9)28cbc	1,140	4/12/96	1476.06	1473.3
M23-UBF	210-250	UBFU	55-555824	746512.48 N 846688.13 E	D(4-9)28cbc	250	4/13/96	1475.16	1473.3

[a] *Feet above mean sea level (amsl)*

[b] *Feet below ground surface (bgs)*

Table P-2 . Proposed New POC, Operational' and Supplemental Monitor Wells for use in Conjunction with the PTF

Well ID	Screened Interval (feet)[b]	Screened Aquifer Unit	ADWR No.	Proposed Location Coordinates (Northing Easting)	Cadastral Coordinates	Total Depth (feet)[b]	Date Installed	Reference Point Elevation (feet)[a]	Land Elevation (feet)[a]
M52-UBF	200-275	UBFU	Not Drilled Yet	747189.88 N 851095.47 E	Not Drilled Yet	276	TBD	Not Drilled Yet	Not Drilled Yet
M54-LBF/M54-O	500-620 640-1200	LBF/O	Not Drilled Yet	746743.08 N 847316.08 E	Not Drilled Yet	1,200	TBD	Not Drilled Yet	Not Drilled Yet
M55-UBF	240-260	UBFU	Not Drilled Yet	746214.77 N 847566.24 E	Not Drilled Yet	260	TBD	Not Drilled Yet	Not Drilled Yet
M56-LBF	320-340	LBF	Not Drilled Yet	746237.06 N 847543.95 E	Not Drilled Yet	340	TBD	Not Drilled Yet	Not Drilled Yet
M57-O	525-1200	O	Not Drilled Yet	746132.66 N 847378.11 E	Not Drilled Yet	1,200	TBD	Not Drilled Yet	Not Drilled Yet
M58-O	595-1200	O	Not Drilled Yet	746540.33 N 847669.91 E	Not Drilled Yet	1,200	TBD	Not Drilled Yet	Not Drilled Yet
M59-O	535-1200	O	Not Drilled Yet	746245.57 N 847901.29 E	Not Drilled Yet	1,200	TBD	Not Drilled Yet	Not Drilled Yet
M60-O	445-1200	O	Not Drilled Yet	745890.19 N 847601.34 E	Not Drilled Yet	1,200	TBD	Not Drilled Yet	Not Drilled Yet
M61-LBF	400-600	LBF	Not Drilled Yet	745973.42 N 848184.46 E	Not Drilled Yet	600	TBD	Not Drilled Yet	Not Drilled Yet
MW-01	320-600 630-1200	LBF/O	Not Drilled Yet	746480-7050* 847407.0326	Not Drilled Yet	1,200	TBD	Not Drilled Yet	Not Drilled Yet

[a] *Feet above mean sea level (amsl)*

[b] *Feet below ground surface (bgs)*

** Proposed location, final location will be within 100 ft based on requirements of APP*

Table P-3. Quarterly Compliance Monitoring Tables (Level 1 Parameters)

Parameter	POC Well M14-GL		POC Well M15-GU		POC Well M22-O		POC Well M23-UBF	
	AQL (mg/L)	Alert Level (mg/L)	AQL (mg/L)	Alert Level (mg/L)	AQL (mg/L)	Alert Level (mg/L)	AQL (mg/L)	Alert Level (mg/L)
pH (field) (S.U.)	Monitor	Monitor	Monitor	Monitor	Monitor	Monitor	Monitor	Monitor
Specific Conductance (field) (mhos/cm)	Monitor	Monitor	Monitor	Monitor	Monitor	Monitor	Monitor	Monitor
Temperature (field)	Monitor	Monitor	Monitor	Monitor	Monitor	Monitor	Monitor	Monitor
Fluoride	4.0	3.2	4.0	3.2	4.0	3.2	4.0	3.2
Magnesium	Monitor	23	Monitor	44	Monitor	8.6	Monitor	69
Sulfate	Monitor	144	Monitor	126	Monitor	86	Monitor	411
Total Dissolved Solids	Monitor	874	Monitor	1359	Monitor	1094	Monitor	2392
Parameter	POC Well M52-UBF		POC Well M54-LBF		POC Well M54-O		Supp Monitor Well M55-UBF	
	AQL (mg/L)	Alert Level (mg/L)	AQL (mg/L)	Alert Level (mg/L)	AQL (mg/L)	Alert Level (mg/L)	AQL (mg/L)	Alert Level (mg/L)
pH (field) (S.U.)	Monitor	Monitor	Monitor	Monitor	Monitor	Monitor	Monitor	Monitor
Specific Conductance (field) (mhos/cm)	Monitor	Monitor	Monitor	Monitor	Monitor	Monitor	Monitor	Monitor
Temperature (field)	Monitor	Monitor	Monitor	Monitor	Monitor	Monitor	Monitor	Monitor
Fluoride	Reserved	Reserved	Reserved	Reserved	Reserved	Reserved	Reserved	Reserved
Magnesium	Monitor	Reserved	Monitor	Reserved	Monitor	Reserved	Monitor	Reserved
Sulfate	Monitor	Reserved	Monitor	Reserved	Monitor	Reserved	Monitor	Reserved
Total Dissolved Solids	Monitor	Reserved	Monitor	Reserved	Monitor	Reserved	Monitor	Reserved

AQL = Aquifer Quality Limit
mg/L = milligrams per liter
mhos/cm = mhos per centimeter
POC = point-of-compliance
S.U. = Standard Units
TBD = to be determined

Table P-3. Quarterly Compliance Monitoring Tables (Level 1 Parameters)

Parameter	Supp Monitor Well M56-LBF		Supp Monitor Well M57-O		Supp Monitor Well M58-O		Supp Monitor Well M59-O	
	AQL (mg/L)	Alert Level (mg/L)	AQL (mg/L)	Alert Level (mg/L)	AQL (mg/L)	Alert Level (mg/L)	AQL (mg/L)	Alert Level (mg/L)
pH (field) (S.U.)	Monitor	Monitor	Monitor	Monitor	Monitor	Monitor	Monitor	Monitor
Specific Conductance (field) (mhos/cm)	Monitor	Monitor	Monitor	Monitor	Monitor	Monitor	Monitor	Monitor
Temperature (field)	Monitor	Monitor	Monitor	Monitor	Monitor	Monitor	Monitor	Monitor
Fluoride	Reserved	Reserved	Reserved	Reserved	Reserved	Reserved	Reserved	Reserved
Magnesium	Monitor	Reserved	Monitor	Reserved	Monitor	Reserved	Monitor	Reserved
Sulfate	Monitor	Reserved	Monitor	Reserved	Monitor	Reserved	Monitor	Reserved
Total Dissolved Solids	Monitor	Reserved	Monitor	Reserved	Monitor	Reserved	Monitor	Reserved
Parameter	Supp Monitor Well M60-O		Supp Monitor Well M61-LBF					
	AQL (mg/L)	Alert Level (mg/L)	AQL (mg/L)	Alert Level (mg/L)				
pH (field) (S.U.)	Monitor	Monitor	Monitor	Monitor				
Specific Conductance (field) (mhos/cm)	Monitor	Monitor	Monitor	Monitor				
Temperature (field)	Monitor	Monitor	Monitor	Monitor				
Fluoride	Reserved	Reserved	Reserved	Reserved				
Magnesium	Monitor	Reserved	Monitor	Reserved				
Sulfate	Monitor	Reserved	Monitor	Reserved				
Total Dissolved Solids	Monitor	Reserved	Monitor	Reserved				

AQL = Aquifer Quality Limit
mg/L = milligrams per liter
mhos/cm = mhos per centimeter
POC = point-of-compliance
S.U. = Standard Units
TBD = to be determined

Table P-4. Semiannual and Contingency Monitoring Tables (Level 2 Parameters)

Parameter	POC Well M14-GL		POC Well M15-GU		POC Well M22-0		POC Well M23-UBF	
	AQL (mg/L)	Alert Level (mg/L)	AQL (mg/L)	Alert Level (mg/L)	AQL (mg/L)	Alert Level (mg/L)	AQL (mg/L)	Alert Level (mg/L)
pH (field) (S.U.)	Monitor	Monitor	Monitor	Monitor	Monitor	Monitor	Monitor	Monitor
Specific conductance (field) (mhos/cm)	Monitor	Monitor	Monitor	Monitor	Monitor	Monitor	Monitor	Monitor
Temperature (field)	Monitor	Monitor	Monitor	Monitor	Monitor	Monitor	Monitor	Monitor
pH (lab)	Monitor	Monitor	Monitor	Monitor	Monitor	Monitor	Monitor	Monitor
Bicarbonate	Monitor	Monitor	Monitor	Monitor	Monitor	Monitor	Monitor	Monitor
Calcium	Monitor	Monitor	Monitor	Monitor	Monitor	Monitor	Monitor	Monitor
Carbonate	Monitor	Monitor	Monitor	Monitor	Monitor	Monitor	Monitor	Monitor
Chloride	Monitor	Monitor	Monitor	Monitor	Monitor	Monitor	Monitor	Monitor
Fluoride	4	3.2	4	3.2	4	3.2	4	3.2
Magnesium	Monitor	23	Monitor	44	Monitor	8.6	Monitor	69
Nitrate as nitrogen	Monitor	Monitor	Monitor	Monitor	Monitor	Monitor	Monitor	Monitor
Potassium	Monitor	Monitor	Monitor	Monitor	Monitor	Monitor	Monitor	Monitor
Sodium	Monitor	Monitor	Monitor	Monitor	Monitor	Monitor	Monitor	Monitor
Sulfate	Monitor	144	Monitor	126	Monitor	86	Monitor	411
Total dissolved solids	Monitor	874	Monitor	1359	Monitor	1094	Monitor	2392
Cation/anion balance	Monitor	Monitor	Monitor	Monitor	Monitor	Monitor	Monitor	Monitor
Aluminum	Monitor	0.71	Monitor	0.71	Monitor	0.71	Monitor	0.71
Antimony	0.006	0.0048	0.006	0.0048	0.006	0.0048	0.006	0.0048
Arsenic	0.05	0.026	0.05	0.026	0.05	0.026	0.05	0.026
Barium	2	1.6	2	1.6	2	1.6	2	1.6
Beryllium	0.004	0.0032	0.004	0.0032	0.004	0.0032	0.004	0.0032
Cadmium	0.005	0.004	0.02	Monitor	0.02	Monitor	0.005	0.004
Parameter	POC Well M14-GL		POC Well M15-GU		POC Well M22-0		POC Well M23-UBF	
	AQL (mg/L)	Alert Level (mg/L)	AQL (mg/L)	Alert Level (mg/L)	AQL (mg/L)	Alert Level (mg/L)	AQL (mg/L)	Alert Level (mg/L)
Chromium (total)	0.1	0.08	0.1	0.08	0.1	0.08	0.1	0.08
Cobalt	Monitor	0.005	Monitor	0.005	Monitor	0.005	Monitor	0.005
Copper	Monitor	0.51	Monitor	0.51	Monitor	0.51	Monitor	0.51
Iron	Monitor	2.2	Monitor	2.2	Monitor	2.2	Monitor	2.2
Lead	0.05	0.04	0.05	0.04	0.05	0.04	0.05	0.04
Manganese	Monitor	0.22	Monitor	0.22	Monitor	0.22	Monitor	0.22
Mercury	0.002	0.0011	0.002	0.0011	0.002	0.0011	0.002	0.0011
Nickel	0.1	0.08	0.13	0.08	0.1	0.08	0.1	0.08
Selenium	0.05	0.027	0.05	0.027	0.05	0.027	0.05	0.027
Thallium	0.002	0.0016	0.002	0.0016	0.01	Monitor	0.012	Monitor
Zinc	Monitor	2.5	Monitor	2.5	Monitor	2.5	Monitor	2.5
Gross Alpha	Monitor	15	Monitor	15	Monitor	15	Monitor	15
Adjusted Alpha [2, 3]	15	12	15	12	15	12	15	12
Radium 226 + 228 [2]	5	4	5	4	5	4	5	4
Uranium Isotopes[2]	Monitor	Monitor	Monitor	Monitor	Monitor	Monitor	Monitor	Monitor
Uranium Total	Monitor	Monitor	Monitor	Monitor	Monitor	Monitor	Monitor	Monitor
TPH - diesel	Monitor	Monitor	Monitor	Monitor	Monitor	Monitor	Monitor	Monitor
Benzene [4]	0.005	0.004	0.005	0.004	0.005	0.004	0.005	0.004
Ethylbenzene [4]	0.7	0.56	0.7	0.56	0.7	0.56	0.7	0.56
Toluene [4]	1	0.8	1	0.8	1	0.8	1	0.8
Total Xylene [4]	10	8	10	8	10	8	10	8

Table P-4. Semiannual and Contingency Monitoring Tables (Level 2 Parameters)

Parameter	POC Well M52-UBF		POC Well M54-LBF		POC Well M54-O		Supp Monitor Well M55-UBF	
	AQL (mg/L)	Alert Level (mg/L)	AQL (mg/L)	Alert Level (mg/L)	AQL (mg/L)	Alert Level (mg/L)	AQL (mg/L)	Alert Level (mg/L)
pH (field) (S.U.)	Monitor	Monitor	Monitor	Monitor	Monitor	Monitor	Monitor	Monitor
Specific conductance (field) (mhos/cm)	Monitor	Monitor	Monitor	Monitor	Monitor	Monitor	Monitor	Monitor
Temperature (field)	Monitor	Monitor	Monitor	Monitor	Monitor	Monitor	Monitor	Monitor
pH (lab)	Monitor	Monitor	Monitor	Monitor	Monitor	Monitor	Monitor	Monitor
Bicarbonate	Monitor	Monitor	Monitor	Monitor	Monitor	Monitor	Monitor	Monitor
Calcium	Monitor	Monitor	Monitor	Monitor	Monitor	Monitor	Monitor	Monitor
Carbonate	Monitor	Monitor	Monitor	Monitor	Monitor	Monitor	Monitor	Monitor
Chloride	Monitor	Monitor	Monitor	Monitor	Monitor	Monitor	Monitor	Monitor
Fluoride	Reserved	Reserved	Reserved	Reserved	Reserved	Reserved	Reserved	Reserved
Magnesium	Monitor	Reserved	Monitor	Reserved	Monitor	Reserved	Monitor	Reserved
Nitrate as nitrogen	Monitor	Monitor	Monitor	Monitor	Monitor	Monitor	Monitor	Monitor
Potassium	Monitor	Monitor	Monitor	Monitor	Monitor	Monitor	Monitor	Monitor
Sodium	Monitor	Monitor	Monitor	Monitor	Monitor	Monitor	Monitor	Monitor
Sulfate	Monitor	Reserved	Monitor	Reserved	Monitor	Reserved	Monitor	Reserved
Total dissolved solids	Monitor	Reserved	Monitor	Reserved	Monitor	Reserved	Monitor	Reserved
Cation/anion balance	Monitor	Monitor	Monitor	Monitor	Monitor	Monitor	Monitor	Monitor
Aluminum	Monitor	Reserved	Monitor	Reserved	Monitor	Reserved	Monitor	Reserved
Antimony	Reserved	Reserved	Reserved	Reserved	Reserved	Reserved	Reserved	Reserved
Arsenic	Reserved	Reserved	Reserved	Reserved	Reserved	Reserved	Reserved	Reserved
Barium	Reserved	Reserved	Reserved	Reserved	Reserved	Reserved	Reserved	Reserved
Beryllium	Reserved	Reserved	Reserved	Reserved	Reserved	Reserved	Reserved	Reserved
Cadmium	Reserved	Reserved	Reserved	Reserved	Reserved	Reserved	Reserved	Reserved
Chromium (total)	Reserved	Reserved	Reserved	Reserved	Reserved	Reserved	Reserved	Reserved
Parameter	POC Well M52-UBF		POC Well M54-LBF		POC Well M54-O		Supp Monitor Well M55-UBF	
	AQL (mg/L)	Alert Level (mg/L)	AQL (mg/L)	Alert Level (mg/L)	AQL (mg/L)	Alert Level (mg/L)	AQL (mg/L)	Alert Level (mg/L)
Cobalt	Monitor	Reserved	Monitor	Reserved	Monitor	Reserved	Monitor	Reserved
Copper	Monitor	Reserved	Monitor	Reserved	Monitor	Reserved	Monitor	Reserved
Iron	Monitor	Reserved	Monitor	Reserved	Monitor	Reserved	Monitor	Reserved
Lead	Reserved	Reserved	Reserved	Reserved	Reserved	Reserved	Reserved	Reserved
Manganese	Monitor	Reserved	Monitor	Reserved	Monitor	Reserved	Monitor	Reserved
Mercury	Reserved	Reserved	Reserved	Reserved	Reserved	Reserved	Reserved	Reserved
Nickel.	Reserved	Reserved	Reserved	Reserved	Reserved	Reserved	Reserved	Reserved
Selenium	Reserved	Reserved	Reserved	Reserved	Reserved	Reserved	Reserved	Reserved
Thallium	Reserved	Reserved	Reserved	Reserved	Reserved	Reserved	Reserved	Reserved
Zinc	Monitor	Reserved	Monitor	Reserved	Monitor	Reserved	Monitor	Reserved
Gross Alpha	Monitor	Reserved	Monitor	Reserved	Monitor	Reserved	Monitor	Reserved
Adjusted Alpha [2, 3]	Reserved	Reserved	Reserved	Reserved	Reserved	Reserved	Reserved	Reserved
Radium 226 + 228 [2]	Reserved	Reserved	Reserved	Reserved	Reserved	Reserved	Reserved	Reserved
Uranium Isotopes[2]	Monitor	Monitor	Monitor	Monitor	Monitor	Monitor	Monitor	Monitor
Uranium Total	Monitor	Monitor	Monitor	Monitor	Monitor	Monitor	Monitor	Monitor
PAH	Monitor	Monitor	Monitor	Monitor	Monitor	Monitor	Monitor	Monitor
Benzene [4]	Reserved	Reserved	Reserved	Reserved	Reserved	Reserved	Reserved	Reserved
Ethylbenzene [4]	Reserved	Reserved	Reserved	Reserved	Reserved	Reserved	Reserved	Reserved
Toluene [4]	Reserved	Reserved	Reserved	Reserved	Reserved	Reserved	Reserved	Reserved
Total Xylene [4]	Reserved	Reserved	Reserved	Reserved	Reserved	Reserved	Reserved	Reserved

Table P-4. Semiannual and Contingency Monitoring Tables (Level 2 Parameters)

Parameter	Supp Monitor Well M56-LBF		Supp Monitor Well M57-O		Supp Monitor Well M58-O		Supp Monitor Well M59-O	
	AQL (mg/L)	Alert Level (mg/L)	AQL (mg/L)	Alert Level (mg/L)	AQL (mg/L)	Alert Level (mg/L)	AQL (mg/L)	Alert Level (mg/L)
pH (field) (S.U.)	Monitor	Monitor	Monitor	Monitor	Monitor	Monitor	Monitor	Monitor
Specific conductance (field) (mhos/cm)	Monitor	Monitor	Monitor	Monitor	Monitor	Monitor	Monitor	Monitor
Temperature (field)	Monitor	Monitor	Monitor	Monitor	Monitor	Monitor	Monitor	Monitor
pH (lab)	Monitor	Monitor	Monitor	Monitor	Monitor	Monitor	Monitor	Monitor
Bicarbonate	Monitor	Monitor	Monitor	Monitor	Monitor	Monitor	Monitor	Monitor
Calcium	Monitor	Monitor	Monitor	Monitor	Monitor	Monitor	Monitor	Monitor
Carbonate	Monitor	Monitor	Monitor	Monitor	Monitor	Monitor	Monitor	Monitor
Chloride	Monitor	Monitor	Monitor	Monitor	Monitor	Monitor	Monitor	Monitor
Fluoride	Reserved	Reserved	Reserved	Reserved	Reserved	Reserved	Reserved	Reserved
Magnesium	Monitor	Reserved	Monitor	Reserved	Monitor	Reserved	Monitor	Reserved
Nitrate as nitrogen	Monitor	Monitor	Monitor	Monitor	Monitor	Monitor	Monitor	Monitor
Potassium	Monitor	Monitor	Monitor	Monitor	Monitor	Monitor	Monitor	Monitor
Sodium	Monitor	Monitor	Monitor	Monitor	Monitor	Monitor	Monitor	Monitor
Sulfate	Monitor	Reserved	Monitor	Reserved	Monitor	Reserved	Monitor	Reserved
Total dissolved solids	Monitor	Reserved	Monitor	Reserved	Monitor	Reserved	Monitor	Reserved
Cation/anion balance	Monitor	Monitor	Monitor	Monitor	Monitor	Monitor	Monitor	Monitor
Aluminum	Monitor	Reserved	Monitor	Reserved	Monitor	Reserved	Monitor	Reserved
Antimony	Reserved	Reserved	Reserved	Reserved	Reserved	Reserved	Reserved	Reserved
Arsenic	Reserved	Reserved	Reserved	Reserved	Reserved	Reserved	Reserved	Reserved
Barium	Reserved	Reserved	Reserved	Reserved	Reserved	Reserved	Reserved	Reserved
Beryllium	Reserved	Reserved	Reserved	Reserved	Reserved	Reserved	Reserved	Reserved
Cadmium	Reserved	Reserved	Reserved	Reserved	Reserved	Reserved	Reserved	Reserved
Chromium (total)	Reserved	Reserved	Reserved	Reserved	Reserved	Reserved	Reserved	Reserved
Parameter	Supp Monitor Well M56-LBF		Supp Monitor Well M57-O		Supp Monitor Well M58-O		Supp Monitor Well M59-O	
	AQL (mg/L)	Alert Level (mg/L)	AQL (mg/L)	Alert Level (mg/L)	AQL (mg/L)	Alert Level (mg/L)	AQL (mg/L)	Alert Level (mg/L)
Cobalt	Monitor	Reserved	Monitor	Reserved	Monitor	Reserved	Monitor	Reserved
Copper	Monitor	Reserved	Monitor	Reserved	Monitor	Reserved	Monitor	Reserved
Iron	Monitor	Reserved	Monitor	Reserved	Monitor	Reserved	Monitor	Reserved
Lead	Reserved	Reserved	Reserved	Reserved	Reserved	Reserved	Reserved	Reserved
Manganese	Monitor	Reserved	Monitor	Reserved	Monitor	Reserved	Monitor	Reserved
Mercury	Reserved	Reserved	Reserved	Reserved	Reserved	Reserved	Reserved	Reserved
Nickel.	Reserved	Reserved	Reserved	Reserved	Reserved	Reserved	Reserved	Reserved
Selenium	Reserved	Reserved	Reserved	Reserved	Reserved	Reserved	Reserved	Reserved
Thallium	Reserved	Reserved	Reserved	Reserved	Reserved	Reserved	Reserved	Reserved
Zinc	Monitor	Reserved	Monitor	Reserved	Monitor	Reserved	Monitor	Reserved
Gross Alpha	Monitor	Reserved	Monitor	Reserved	Monitor	Reserved	Monitor	Reserved
Adjusted Alpha [2, 3]	Reserved	Reserved	Reserved	Reserved	Reserved	Reserved	Reserved	Reserved
Radium 226 + 228 [2]	Reserved	Reserved	Reserved	Reserved	Reserved	Reserved	Reserved	Reserved
Uranium Isotopes[2]	Monitor	Monitor	Monitor	Monitor	Monitor	Monitor	Monitor	Monitor
Uranium Total	Monitor	Monitor	Monitor	Monitor	Monitor	Monitor	Monitor	Monitor
PAH	Monitor	Monitor	Monitor	Monitor	Monitor	Monitor	Monitor	Monitor
Benzene [4]	Reserved	Reserved	Reserved	Reserved	Reserved	Reserved	Reserved	Reserved
Ethylbenzene [4]	Reserved	Reserved	Reserved	Reserved	Reserved	Reserved	Reserved	Reserved
Toluene [4]	Reserved	Reserved	Reserved	Reserved	Reserved	Reserved	Reserved	Reserved
Total Xylene [4]	Reserved	Reserved	Reserved	Reserved	Reserved	Reserved	Reserved	Reserved

Table P-4. Semiannual and Contingency Monitoring Tables (Level 2 Parameters)

Parameter	Supp Monitor Well M60-O		Supp Monitor Well M61-LBF					
	AQL (mg/L)	Alert Level (mg/L)	AQL (mg/L)	Alert Level (mg/L)				
pH (field) (S.U.)	Monitor	Monitor	Monitor	Monitor				
Specific conductance (field) (mhos/cm)	Monitor	Monitor	Monitor	Monitor				
Temperature (field)	Monitor	Monitor	Monitor	Monitor				
pH (lab)	Monitor	Monitor	Monitor	Monitor				
Bicarbonate	Monitor	Monitor	Monitor	Monitor				
Calcium	Monitor	Monitor	Monitor	Monitor				
Carbonate	Monitor	Monitor	Monitor	Monitor				
Chloride	Monitor	Monitor	Monitor	Monitor				
Fluoride	Reserved	Reserved	Reserved	Reserved				
Magnesium	Monitor	Reserved	Monitor	Reserved				
Nitrate as nitrogen	Monitor	Monitor	Monitor	Monitor				
Potassium	Monitor	Monitor	Monitor	Monitor				
Sodium	Monitor	Monitor	Monitor	Monitor				
Sulfate	Monitor	Reserved	Monitor	Reserved				
Total dissolved solids	Monitor	Reserved	Monitor	Reserved				
Cation/anion balance	Monitor	Monitor	Monitor	Monitor				
Aluminum	Monitor	Reserved	Monitor	Reserved				
Antimony	Reserved	Reserved	Reserved	Reserved				
Arsenic	Reserved	Reserved	Reserved	Reserved				
Barium	Reserved	Reserved	Reserved	Reserved				
Beryllium	Reserved	Reserved	Reserved	Reserved				
Cadmium	Reserved	Reserved	Reserved	Reserved				
Chromium (total)	Reserved	Reserved	Reserved	Reserved				
Parameter	Supp Monitor Well M60-O		Supp Monitor Well M61-LBF					
	AQL (mg/L)	Alert Level (mg/L)	AQL (mg/L)	Alert Level (mg/L)				
Cobalt	Monitor	Reserved	Monitor	Reserved				
Copper	Monitor	Reserved	Monitor	Reserved				
Iron	Monitor	Reserved	Monitor	Reserved				
Lead	Reserved	Reserved	Reserved	Reserved				
Manganese	Monitor	Reserved	Monitor	Reserved				
Mercury	Reserved	Reserved	Reserved	Reserved				
Nickel.	Reserved	Reserved	Reserved	Reserved				
Selenium	Reserved	Reserved	Reserved	Reserved				
Thallium	Reserved	Reserved	Reserved	Reserved				
Zinc	Monitor	Reserved	Monitor	Reserved				
Gross Alpha	Monitor	Reserved	Monitor	Reserved				
Adjusted Alpha [2, 3]	Reserved	Reserved	Reserved	Reserved				
Radium 226 + 228 [2]	Reserved	Reserved	Reserved	Reserved				
Uranium Isotopes[2]	Monitor	Monitor	Monitor	Monitor				
Uranium Total	Monitor	Monitor	Monitor	Monitor				
PAH	Monitor	Monitor	Monitor	Monitor				
Benzene [4]	Reserved	Reserved	Reserved	Reserved				
Ethylbenzene [4]	Reserved	Reserved	Reserved	Reserved				
Toluene [4]	Reserved	Reserved	Reserved	Reserved				
Total Xylene [4]	Reserved	Reserved	Reserved	Reserved				

Table P-4. Semiannual and Contingency Monitoring Tables (Level 2 Parameters)

1. *Nitrate will be used only for calculation of cation/anion balance because of regional nitrate pollution and none used in processes.*
2. *These parameters are to be analyzed for only if the concentration of Gross Alpha Particle Activity exceeds the alert level of 15 picoCuries per liter.*
3. *Adjusted gross alpha includes radium-226 but excludes radon-222 and total uranium.*

levels.

AQL = Aquifer Quality Limit
mg/L = milligrams per liter
mhos/cm = mhos per centimeter
POC = point-of-compliance
S.U. = Standard Units
TBD = to be determined

Table P-5. Operational Monitoring Well Parameters (MW-01)

Parameter	Operational Monitoring Well MW-01				
	AQL (mg/L)	Alert Level (mg/L)	Pre-Operational Monitoring Frequency	Post-Operational Monitoring Frequency	Operational Monitoring Frequency
pH (field) (S.U.)	None	None	1 Month Prior to Operations	1 Month Following Operations	Monthly During Operations
Specific conductance (field) (mhos/cm)	None	None	1 Month Prior to Operations	1 Month Following Operations	-
Temperature (field)	None	None	1 Month Prior to Operations	1 Month Following Operations	-
pH (lab)	None	None	1 Month Prior to Operations	1 Month Following Operations	-
Bicarbonate	None	None	1 Month Prior to Operations	1 Month Following Operations	-
Calcium	None	None	1 Month Prior to Operations	1 Month Following Operations	-
Carbonate	None	None	1 Month Prior to Operations	1 Month Following Operations	-
Chloride	None	None	1 Month Prior to Operations	1 Month Following Operations	-
Fluoride	None	None	1 Month Prior to Operations	1 Month Following Operations	-
Magnesium	None	None	1 Month Prior to Operations	1 Month Following Operations	-
Nitrate as nitrogen	None	None	1 Month Prior to Operations	1 Month Following Operations	-
Potassium	None	None	1 Month Prior to Operations	1 Month Following Operations	-
Sodium	None	None	1 Month Prior to Operations	1 Month Following Operations	-
Sulfate	None	None	1 Month Prior to Operations	1 Month Following Operations	Monthly During Operations
Total dissolved solids	None	None	1 Month Prior to Operations	1 Month Following Operations	Monthly During Operations
Cation/anion balance	None	None	1 Month Prior to Operations	1 Month Following Operations	-
Aluminum	None	None	1 Month Prior to Operations	1 Month Following Operations	-
Antimony	None	None	1 Month Prior to Operations	1 Month Following Operations	-
Arsenic	None	None	1 Month Prior to Operations	1 Month Following Operations	-
Barium	None	None	1 Month Prior to Operations	1 Month Following Operations	-
Beryllium	None	None	1 Month Prior to Operations	1 Month Following Operations	-
Cadmium	None	None	1 Month Prior to Operations	1 Month Following Operations	-

Table P-5. Operational Monitoring Well Parameters (MW-01)

Parameter	Operational Monitoring Well MW-01				
	AQL (mg/L)	Alert Level (mg/L)	Pre-Operational Monitoring Frequency	Post-Operational Monitoring Frequency	Operational Monitoring Frequency
Chromium (total)	None	None	1 Month Prior to Operations	1 Month Following Operations	-
Cobalt	None	None	1 Month Prior to Operations	1 Month Following Operations	-
Copper	None	None	1 Month Prior to Operations	1 Month Following Operations	-
Iron	None	None	1 Month Prior to Operations	1 Month Following Operations	-
Lead	None	None	1 Month Prior to Operations	1 Month Following Operations	-
Manganese	None	None	1 Month Prior to Operations	1 Month Following Operations	-
Mercury	None	None	1 Month Prior to Operations	1 Month Following Operations	-
Nickel	None	None	1 Month Prior to Operations	1 Month Following Operations	-
Selenium	None	None	1 Month Prior to Operations	1 Month Following Operations	-
Thallium	None	None	1 Month Prior to Operations	1 Month Following Operations	-
Zinc	None	None	1 Month Prior to Operations	1 Month Following Operations	-
Gross Alpha	None	None	1 Month Prior to Operations	1 Month Following Operations	-
Adjusted Alpha [2, 3]	None	None	1 Month Prior to Operations	1 Month Following Operations	-
Radium 226 + 228 [2]	None	None	1 Month Prior to Operations	1 Month Following Operations	-
Uranium Isotopes[2]	None	None	1 Month Prior to Operations	1 Month Following Operations	-
Uranium Total	None	None	1 Month Prior to Operations	1 Month Following Operations	-
TPH - diesel	None	None	1 Month Prior to Operations	1 Month Following Operations	-
Benzene	None	None	1 Month Prior to Operations	1 Month Following Operations	-
Ethylbenzene	None	None	1 Month Prior to Operations	1 Month Following Operations	-
Toluene	None	None	1 Month Prior to Operations	1 Month Following Operations	-
Total Xylene	None	None	1 Month Prior to Operations	1 Month Following Operations	-

1. Nitrate will be used only for calculation of cation/anion balance because of regional nitrate pollution and none used in processes.

2. These parameters are to be analyzed for only if the concentration of Gross Alpha Particle Activity exceeds the alert level of 15 picoCuries per liter.

3. Adjusted gross alpha includes radium-226 but excludes radon-222 and total uranium.

AQL = Aquifer Quality Limit
mg/L = milligrams per liter
mhos/cm = mhos per centimeter
POC = point-of-compliance
S.U. = Standard Units
TBD = to be determined

Exhibit P-1

Alert Levels

FLORENCE COPPER, INC.

UIC PERMIT APPLICATION

FLORENCE COPPER PROJECT – PRODUCTION TEST FACILITY

EXHIBIT P-1: ALERT LEVELS

Table of Contents

Table of Contents 1

1.1 Introduction 2

1.2 Discharge Limitations 2

1.3 Monitoring Activities 2

1.3.1 Monitoring and Analytical Requirements 2
1.3.2 Groundwater Monitoring Sampling Protocols 3
1.3.3 Existing ALs and AQLs 4
1.3.4 New ALs and AQLs 4
1.3.5 Replacement POC and Supplemental Monitoring Wells 5
1.3.6 Compliance Monitoring 5
1.3.7 Facility/Operational Monitoring 5

1.4 Temporary Cessation 5

1.5 References 6

1.1 Introduction

Florence Copper, Inc. (Florence Copper) has prepared this Exhibit P-1 to Attachment P to provide information regarding proposed alert levels (ALs), discharge limitations, monitoring requirements, compliance schedules, and temporary cessation or related plans. Accordingly, this Exhibit includes information that describes the ALs, discharge limitations, monitoring requirements, compliance schedules, and temporary cessation plans proposed by Florence Copper.

1.2 Discharge Limitations

Florence Copper proposes the following discharge limitations:

1. All permitted facilities will be operated and maintained to prevent unauthorized discharges pursuant to Arizona Revised Statutes (A.R.S.) 49-201(12) resulting from failure or bypassing of Best Available Demonstrated Control Technology (BADCT) pollutant control technologies including liner failure[1], uncontrollable leakage, overtopping (e.g., exceeding the maximum storage capacity, defined as a fluid level exceeding the crest elevation of a permitted impoundment), berm breaches that result in an unexpected loss of fluid, accidental spills, or other unauthorized discharges.
2. Injection of lixiviant will not be conducted until all core holes and wells within 500 feet of an injection or recovery well located in the Production Test Facility (PTF) well field have been abandoned in accordance with the Plugging and Abandonment Plan included as Attachment Q of the Underground Injection Control (UIC) Permit application.
3. Florence Copper will initiate contingency actions identified in the Temporary Aquifer Protection Permit (APP) if process solution sampling data show that the polynuclear aromatic hydrocarbon (PAH) concentration in the lixiviant exceeds 20 milligrams per liter (mg/L) in any monthly sample, or 10 mg/L as a quarterly average.

1.3 Monitoring Activities

This section describes monitoring activities that are designed to provide an early detection and prompt response to any condition that might result in an unauthorized discharge to an aquifer or to the vadose zone, or that might cause a violation of an Aquifer Water Quality Standard (AWQS) at a Point of Compliance (POC) or supplemental monitoring well, or cause concentrations of discharge constituents to increase at a POC or supplemental monitoring well if the pre-operational concentrations of those constituents exceed AWQS. The activities include groundwater and facility/operational monitoring.

1.3.1 Monitoring and Analytical Requirements

All monitoring required under the UIC Permit will continue for the duration of the permit except as conducted in accordance with a temporary cessation plan approved by the United States Environmental Protection Agency (USEPA) and the Arizona Department of Environmental Quality (ADEQ) in accordance with Section 1.4 below. All sampling, preservation, and holding times will be in accordance with currently accepted standards of professional practice. Trip blanks, equipment blanks, and duplicate samples will also be obtained and chain-of-custody procedures will be followed, in accordance with currently accepted standards of professional practice. Florence Copper will consult with the USEPA Code of Federal Regulations (CFR) for guidance in this regard. Copies of laboratory analyses and chain-of-custody forms will be maintained at the permitted facility. Upon request, these documents will be made immediately available for review by USEPA and ADEQ personnel.

[1] Liner failure in a single-lined impoundment is any condition that would result in a leakage exceeding 550 gallons per day per acre.

All samples collected for compliance monitoring at the POC wells and operational monitoring at the supplemental monitoring wells will be analyzed using Arizona and USEPA approved methods. Regardless of the method used, the detection limits will be sufficient to determine compliance with the regulatory limits of the parameters specified in the UIC Permit. Analyses will be performed by a laboratory licensed by the Arizona Department of Health Services, Office of Laboratory Licensure and Certification. For results to be considered valid, all analytical work will meet quality control standards specified in the approved methods. A list of Arizona state-certified laboratories can be obtained at the address below:

Arizona Department of Health Services
Office of Laboratory Licensure and Certification
250 North 17 Avenue
Phoenix, AZ 85007
Phone: (602) 364-0720

Monitoring equipment required by this permit will be installed and maintained so that representative samples required by the permit can be collected. If new groundwater wells are determined to be necessary, the construction details will be submitted to the USEPA and ADEQ for approval prior to installation, and the APP and the UIC Permit shall be amended to include any new monitoring points.

1.3.2 Groundwater Monitoring Sampling Protocols

The following describes the protocols that will be used for the collection and analysis of groundwater samples collected from the designated POC and supplemental monitoring wells shown on Figure P-1 and described in Tables P-1 and P-2. The protocols will be used for collecting and analyzing samples from POC wells and supplemental monitoring wells for which ALs and Aquifer Quality Limits (AQLs) have been established, and for collecting and analyzing groundwater samples for the purpose of developing groundwater quality data needed for the establishment of ALs and AQLs. The POC wells for which ALs and/or AQLs have been previously established include M14-GL, M15-GU, M22-O, and M23-UBF. The POC wells that will require ALs and AQLs to be established in accordance with the protocols discussed in Section 1.3.4 include M52-UBF, M54-O, and M54-LBF.

No ALs or AQLs have been established for the proposed supplemental monitoring wells because no groundwater quality data exists for these wells at this time. The supplemental monitoring wells that require ALs and AQLs to be established include M55-UBF, M56-LBF, M57-O, M58-O, M59-O, M60-O, and M61-LBF.

The POC wells M14-GL, M15-GU, M22-O, M23-UBF, and M52-UBF will continue to operate as POC wells under APP No. 101704.

Static water levels will be measured and recorded prior to sampling. Wells will be purged of at least three borehole volumes (as calculated using the static water level) or until field parameters (pH, temperature, and conductivity) are stable, whichever represents the greater volume. If evacuation results in the well going dry, the well will be allowed to recover to 80 percent of the original borehole volume, or for 24 hours, whichever is shorter, prior to sampling. If after 24 hours there is not sufficient water for sampling, the well will be recorded as "dry" for the monitoring event. An explanation for reduced pumping volumes, a record of the volume pumped, and modified sampling procedures will be reported and submitted with the quarterly report.

Florence Copper may conduct the sampling using the low-flow purging method as described in the Arizona Water Resources Research Center, March 1995 Field Manual for Water Quality Sampling. If the low flow sampling method is used, the well will be purged until indicator parameters stabilize. Indicator parameters will include dissolved oxygen, turbidity, pH, temperature, and conductivity.

1.3.3 Existing ALs and AQLs

For each POC well listed in Tables P-1 and P-2, Tables P-3 and P-4 respectively list parameters that are to be monitored quarterly and semi-annually during the period of the permit. The tables also identify the ALs and AQLs that have been previously established for POC wells M14-GL, M15-GU, M22-O, and M23-UBF under Temporary APP No. 106360. Florence Copper proposes to use an updated procedure listed in Temporary APP No. 106360 to calculate ALs and AQLs for the proposed POC wells M52-UBF, M54-LBF, M54-O, and supplemental monitoring wells M55-UBF, M56-LBF, M57-O, M58-O, M59-O, M60-O, and M61-LBF.

1.3.4 New ALs and AQLs

The AQLs and ALs will be established and calculated using the method described below.

1.3.4.1 New ALs

Eight (8) rounds of groundwater sampling are required to establish ambient groundwater quality. ALs for POC and supplemental monitor wells will be calculated for all parameters with an established AWQS and for the other sampling parameters listed as "reserved" in Table P-3 and Table P-4 within 30 days of receipt of the laboratory analyses for the final sampling round of the ambient groundwater monitoring period for each POC and supplemental monitor well listed in Table P-2. Florence Copper will submit the ambient groundwater monitoring data in tabulated form to USEPA for review. Copies of all laboratory analytical reports, field notes, and the quality assurance/quality control (QA/QC) procedures used in the collection and analyses of the samples for all parameters listed in Tables P-3 and P-4 will be submitted to USEPA. Florence Copper will submit a report with the calculations for each AQL and AL included in the permit for review and approval by USEPA.

The ALs will be established and calculated by the following formula:

$$AL = M+KS$$

Where M = mean, S= standard deviation, and K = one-sided normal tolerance interval with a 95% confidence level (Lieberman, 1958). Obvious outliers should be excluded from the data used in the AL calculation.

Florence Copper will use the AL calculation criteria (set forth below) for establishing ALs for the new POC wells and supplemental monitoring wells. The following criteria will be used in establishing the ALs for all contaminants likely to be present in the discharge from the PTF with an established numeric AWQS. The criteria are:

1. The AL will be calculated for a parameter using the analyses from a minimum of eight consecutive monthly sample rounds. Florence Copper will not use more than eight sample rounds in the calculation.
2. Any data where the Practical Quantitation Limit (PQL) exceeds 80 percent of the AWQS will not be included in the AL calculation.
3. If a parameter is below the detection limit, Florence Copper will report the value as “less than” the numeric value for the PQL or detection limit for the parameter, not just as “non-detect”. For those parameters, Florence Copper will use a value of one-half the reported detection limit for the AL calculation.
4. If the analytical results from more than 50 percent of the samples for a specific parameter are non-detect, then the AL shall be set at 80 percent of the AWQS.
5. If the calculated AL for a specific constituent and well is less than 80 percent of the AWQS, the AL shall be set at 80 percent of the AWQS for that constituent in that well.

The following criteria will be met in establishing ALs in the permit for constituents without an AWQS:

1. The AL will be calculated for a parameter using the analyses from a minimum of eight (8) consecutive sample rounds. Florence Copper will not use more than eight sample rounds in the calculation.
2. If a parameter is below the detection limit, Florence Copper will report the value as "less than" the numeric value for the PQL or detection limit for the parameter, not just as "non-detect". For those parameters, the permittee shall use a value of one half the reported detection limit for the AL calculation.

1.3.4.2 New AQLs

For each of the monitored analytes for which a numeric AWQS has been adopted, the AQL will be established as follows:

1. If the calculated AL is less than the AWQS, then the AQL will be set equal to the AWQS.
2. If the calculated AL is greater than the AWQS, then the AQL will be set equal to the calculated AL value and no AL will be set for that constituent at that monitoring point.

1.3.5 Replacement POC and Supplemental Monitoring Wells

In the event that one or more of the designated POC or supplemental monitoring wells should become unusable or inaccessible due to damage, or any other event, a replacement well will be constructed and installed upon approval by USEPA and ADEQ. If the replacement well is 50 feet or less from the original well, the ALs and/or AQLs calculated for the designated POC or supplemental monitoring well will apply to the replacement well.

1.3.6 Compliance Monitoring

Florence Copper will begin compliance monitoring at the designated POC and operational monitoring at the supplemental monitoring wells once applicable ALs and/or AQLs have been established. Florence Copper will continue to monitor each well listed in Tables P-1 and P-2 in accordance with the parameters and frequencies stated in Tables P-3 and P-4. If monitoring indicates that an AL or AQL has been exceeded, Florence Copper will follow the requirements outlined in Section 2.6.2.4 of Temporary APP No. 106360, and Parts II.H.2 of the UIC Permit. The results of compliance monitoring will be documented and submitted with the quarterly report to USEPA and ADEQ.

1.3.7 Facility/Operational Monitoring

1.3.7.1 Facility Monitoring

Table 1 of Exhibit K-2 of Attachment K of this Application (Operations Plan), lists facility components that will be monitored to maintain normal operations. Many of the components listed will be equipped with electronic monitors and automatic shutoffs. Conditions requiring initiation of the contingency plan are described in Table 1 of Exhibit K-2 of Attachment K of this Application.

1.4 Temporary Cessation

Florence Copper will give written notice to USEPA and ADEQ before ceasing operation of the facility for a period of 60 days or greater. At the time of notification, Florence Copper will submit for USEPA and ADEQ approval a plan for maintenance of discharge control systems and for monitoring during the period of temporary cessation. Immediately following USEPA and ADEQ approval, Florence Copper will implement the approved plan. If necessary, USEPA and ADEQ will amend APP and UIC permit conditions to incorporate conditions to address temporary cessation. During the period of temporary cessation, Florence Copper will provide written notice to USEPA and ADEQ of the operational status of the facility every two years. If Florence Copper intends to permanently cease operation of any facility, Florence Copper will submit written notification of closure to USEPA and ADEQ in accordance with permit conditions.

1.5 References

Aquifer Protection Permit No. P-106360. State of Arizona Temporary Aquifer Protection Permit, place ID 1579, LTF 55656.

Lieberman, G.J., 1958. Tables for One-sided Statistical Tolerance Limits: Industrial Quality Control, Vol. XIV, No. 10.

Exhibit P-2

Revised Figures Previously Provided with Comment Responses

- Revised Figure 11-1, Monitor Well Locations, Proposed Test Facility
- Revised Figure 11-2, Supplemental Monitoring Well M61-LBF Design
- Revised Figure 12-1, Supplemental Monitoring Well M57-O Design
- Revised Figure 12-2, Supplemental Monitoring Well M58-O Design
- Revised Figure 12-3, Supplemental Monitoring Well M59-O Design
- Revised Figure 12-4, Supplemental Monitoring Well M60-O Design
- Revised Figure 18-2, Supplemental Monitoring Well M55-UBF Design
- Revised Figure 18-3, Supplemental Monitoring Well M56-LBF Design
- Figure M1-1, Operational Monitoring Well MW-01 Proposed Design

LEGEND

- PROPOSED SUPPLEMENTAL MONITOR WELL LOCATION
- MW-01 OPERATIONAL MONITORING WELL (APPROXIMATE LOCATION BASED ON REQUIREMENTS OF APP 106360)
- EXISTING POC WELL LOCATION
- APPROVED NEW POC WELL LOCATION
- PTF WELL FIELD
- CURIS PROPERTY BOUNDARY
- STATE LAND LEASE
- MAXIMUM EXTENT OF SULFATE MIGRATION IN THE OXIDE 5 YEARS AFTER CLOSURE

N
W E
S

0 200 400 800
SCALE IN FEET

HALEY & ALDRICH

CURIS RESOURCE (ARIZONA) INC.
FLORENCE, ARIZONA

MONITOR WELL LOCATIONS (REVISED)
PROPOSED TEST FACILTY

FLORENCE COPPER INC.

SCALE: AS SHOWN
JULY 2014

FIGURE 11-1

G:\Projects\Curis Resources\38706-Curis Feasibility\GIS\MXDs\NewEPA\Wells.mxd

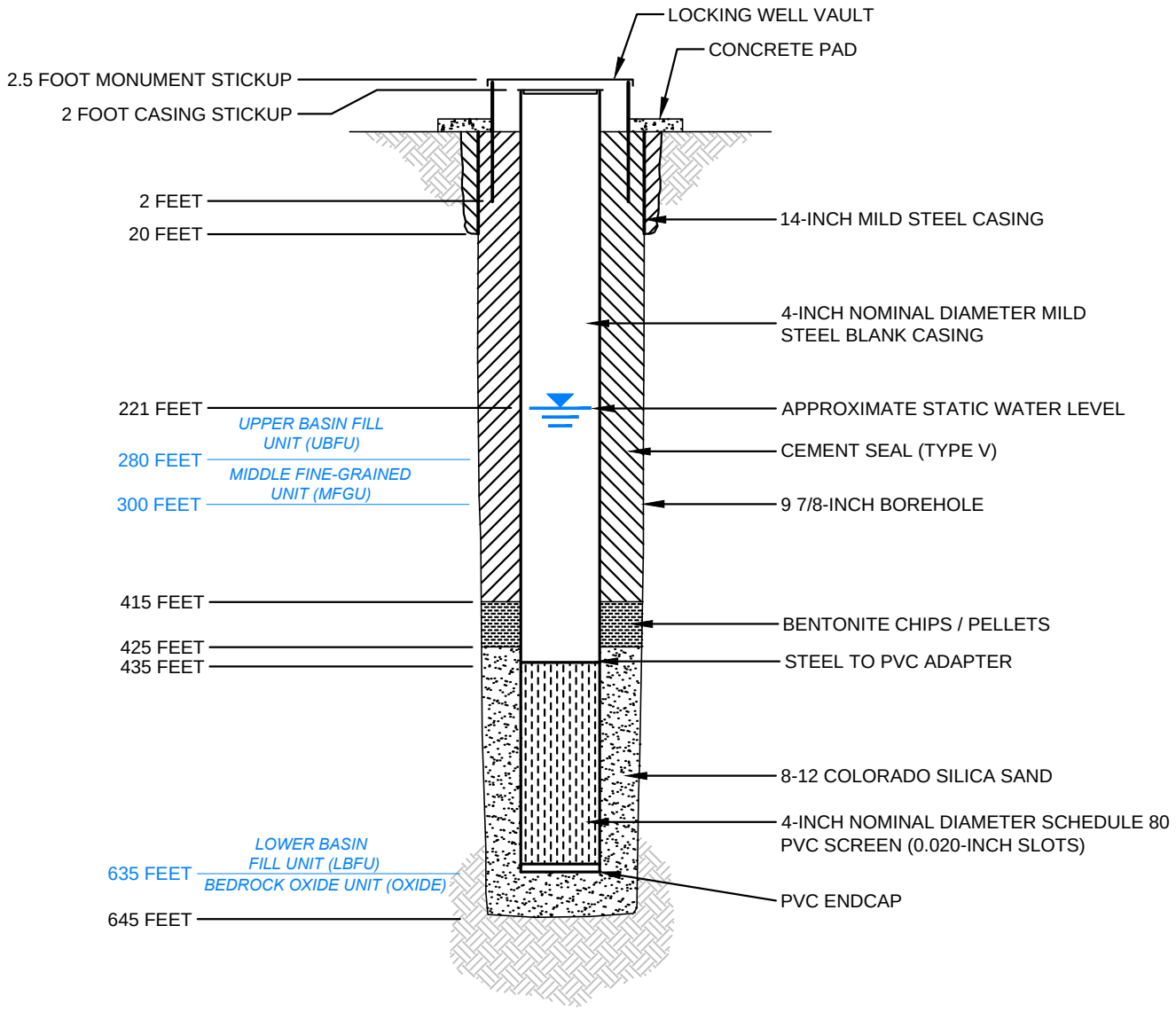

HALEY & ALDRICH

FLORENCE COPPER, INC.
FLORENCE, ARIZONA

SUPPLEMENTAL MONITORING
WELL M61-LBF DESIGN (REVISED)

FLORENCE COPPER INC.

SCALE: NOT TO SCALE
JULY 2014

FIGURE 11-2

G:\PROJECTS\CURIS RESOURCES\38706-CURIS FEASIBILITY\DRAWINGS\2014 UIC APP\WELL DESIGNS\M61WELLDESIGN.DWG

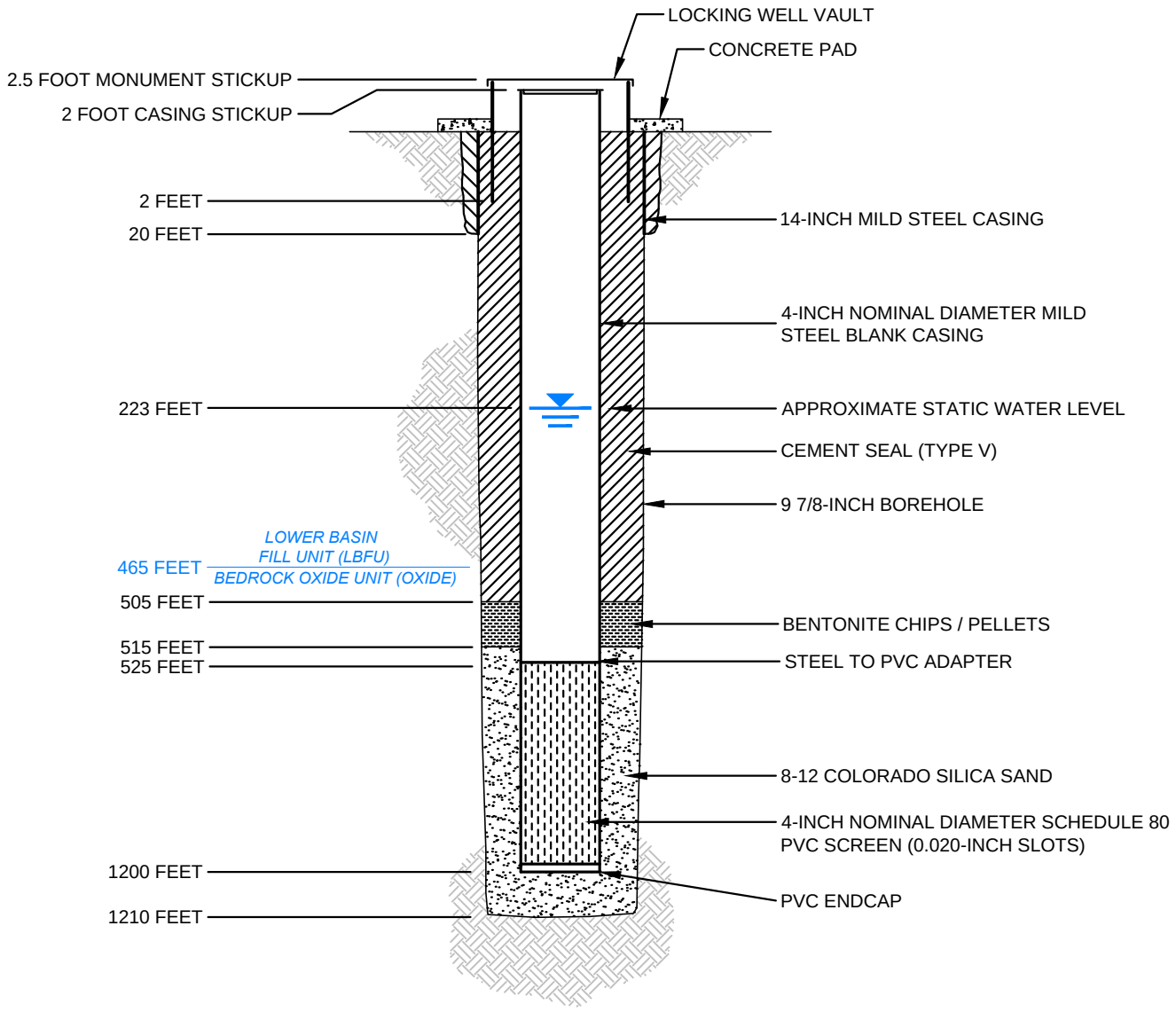

HALEY & ALDRICH

FLORENCE COPPER, INC.
FLORENCE, ARIZONA

SUPPLEMENTAL MONITORING
WELL M57-O DESIGN (REVISED)

FLORENCE COPPER INC.

SCALE: NOT TO SCALE
JULY 2014

FIGURE 12-1

G:\PROJECTS\CURIS RESOURCES\38706-CURIS FEASIBILITY\DRAWINGS\2014 UIC APP\WELL DESIGNS\M57WELLDESIGN.DWG

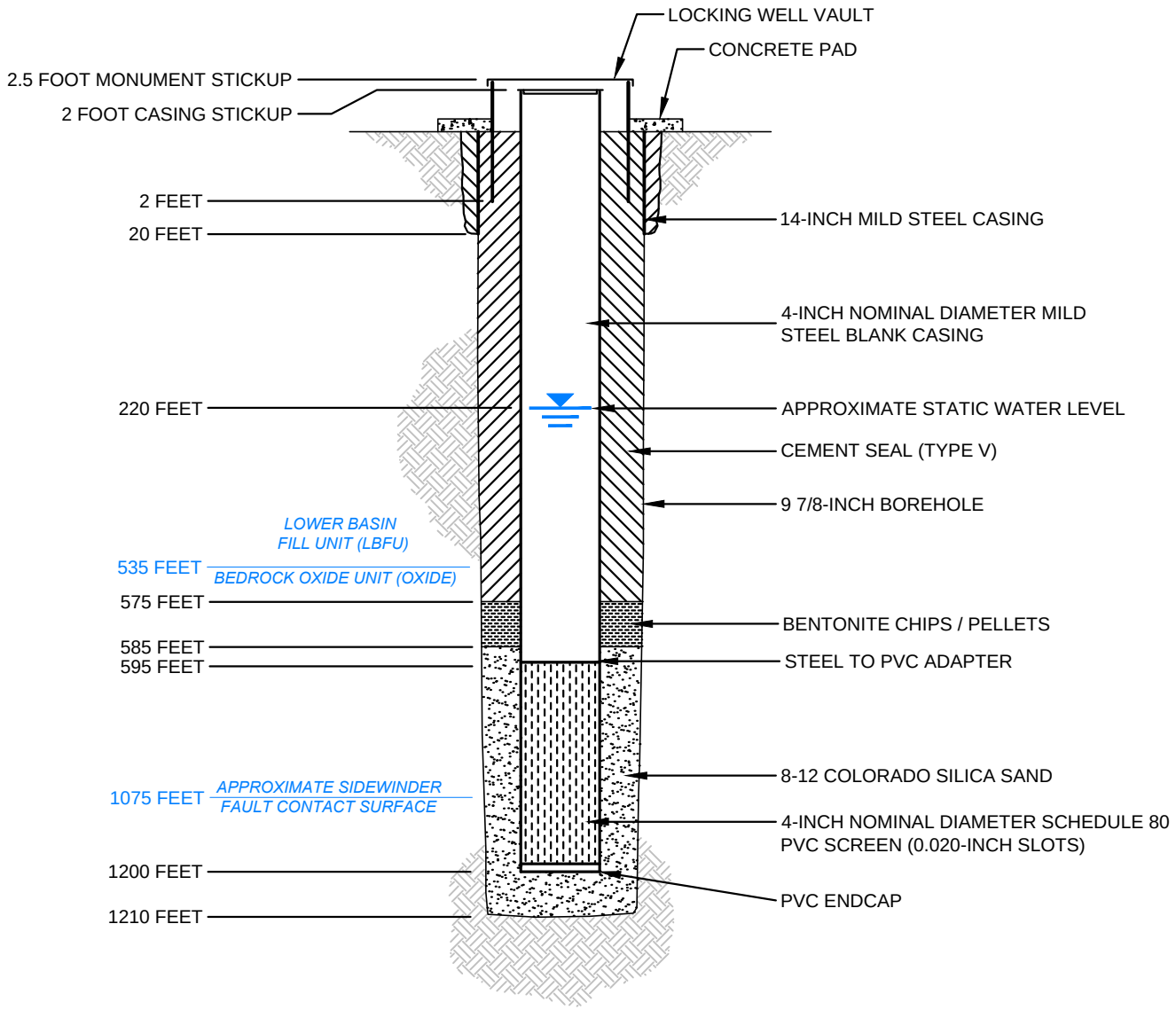

HALEY & ALDRICH

FLORENCE COPPER, INC.
FLORENCE, ARIZONA

SUPPLEMENTAL MONITORING
WELL M58-O DESIGN (REVISED)

FLORENCE COPPER INC.

SCALE: NOT TO SCALE
JULY 2014

FIGURE 12-2

G:\PROJECTS\CURIS RESOURCES\38706-CURIS FEASIBILITY\DRAWINGS\2014 UIC APP\WELL DESIGNS\M58WELLDESIGN.DWG

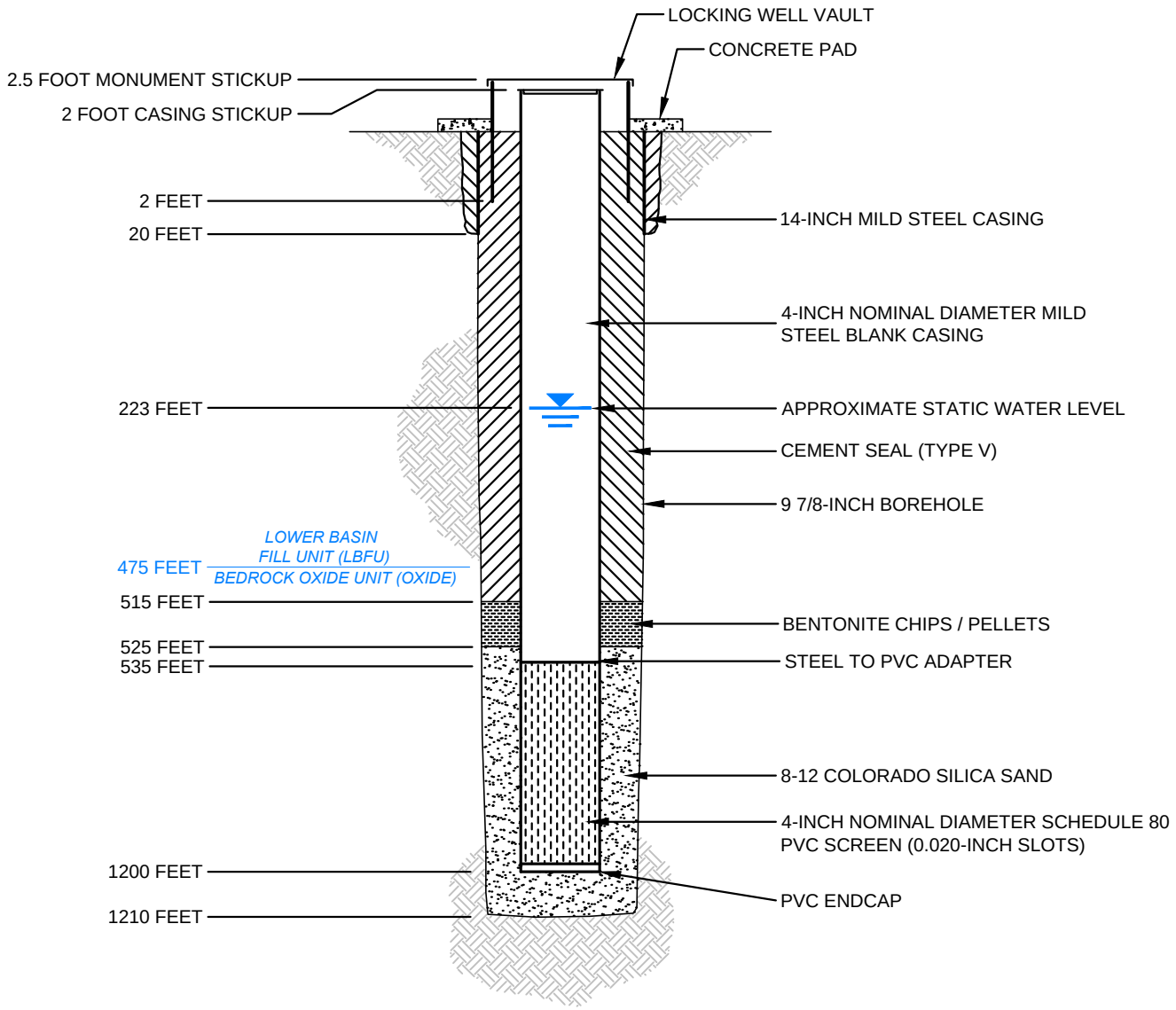

HALEY & ALDRICH

FLORENCE COPPER, INC.
FLORENCE, ARIZONA

SUPPLEMENTAL MONITORING
WELL M59-O DESIGN (REVISED)

FLORENCE COPPER INC.

SCALE: NOT TO SCALE
JULY 2014

FIGURE 12-3

G:\PROJECTS\CURIS RESOURCES\38706-CURIS FEASIBILITY\DRAWINGS\2014 UIC APP\WELL DESIGNS\M59WELLDESIGN.DWG

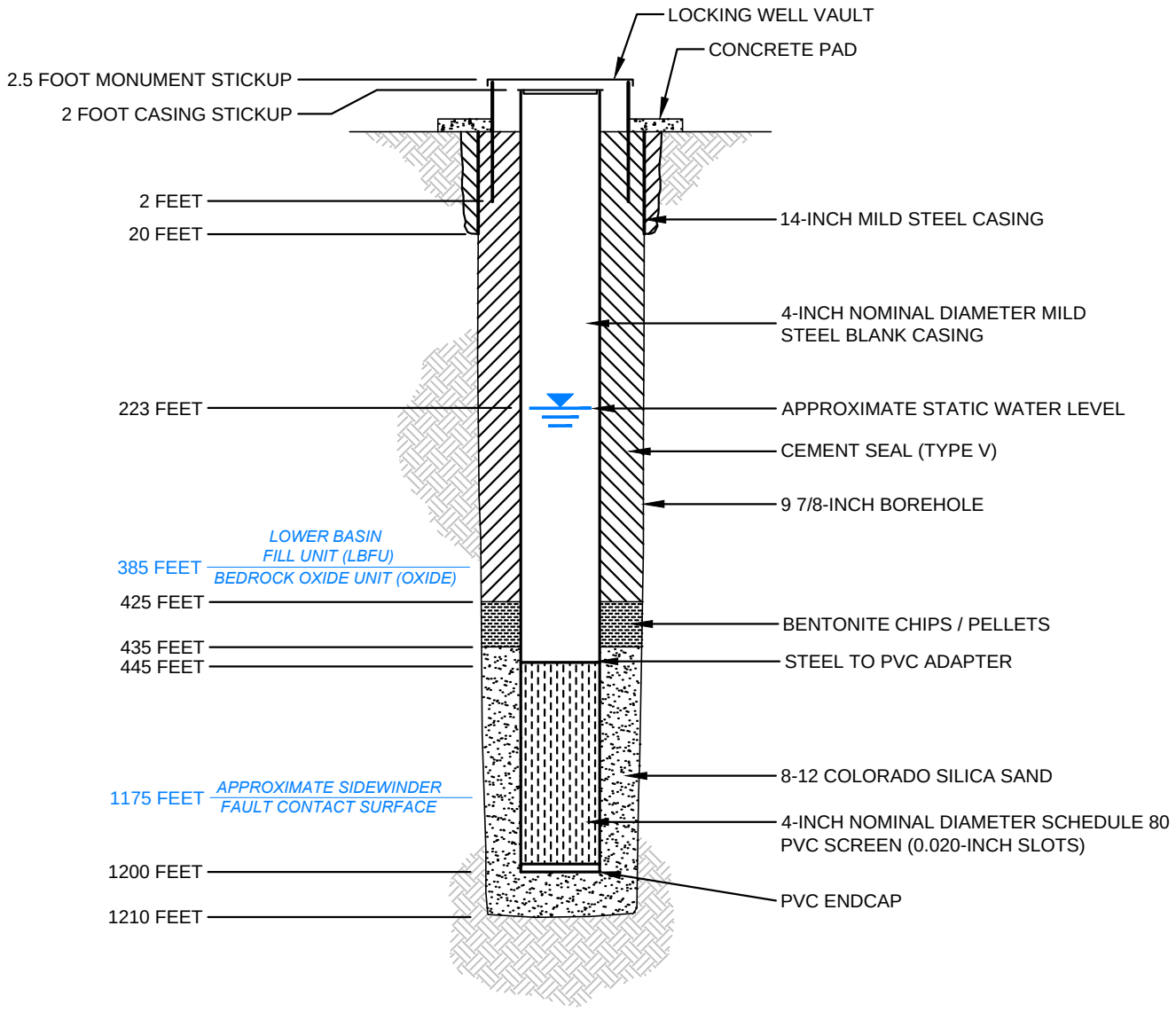

HALEY & ALDRICH

FLORENCE COPPER, INC.
FLORENCE, ARIZONA

SUPPLEMENTAL MONITORING
WELL M60-O DESIGN (REVISED)

FLORENCE COPPER INC.

SCALE: NOT TO SCALE
JULY 2014

FIGURE 12-4

G:\PROJECTS\CURIS RESOURCES\38706-CURIS FEASIBILITY\DRAWINGS\2014 UIC APP\WELL DESIGNS\M60WELLDESIGN.DWG

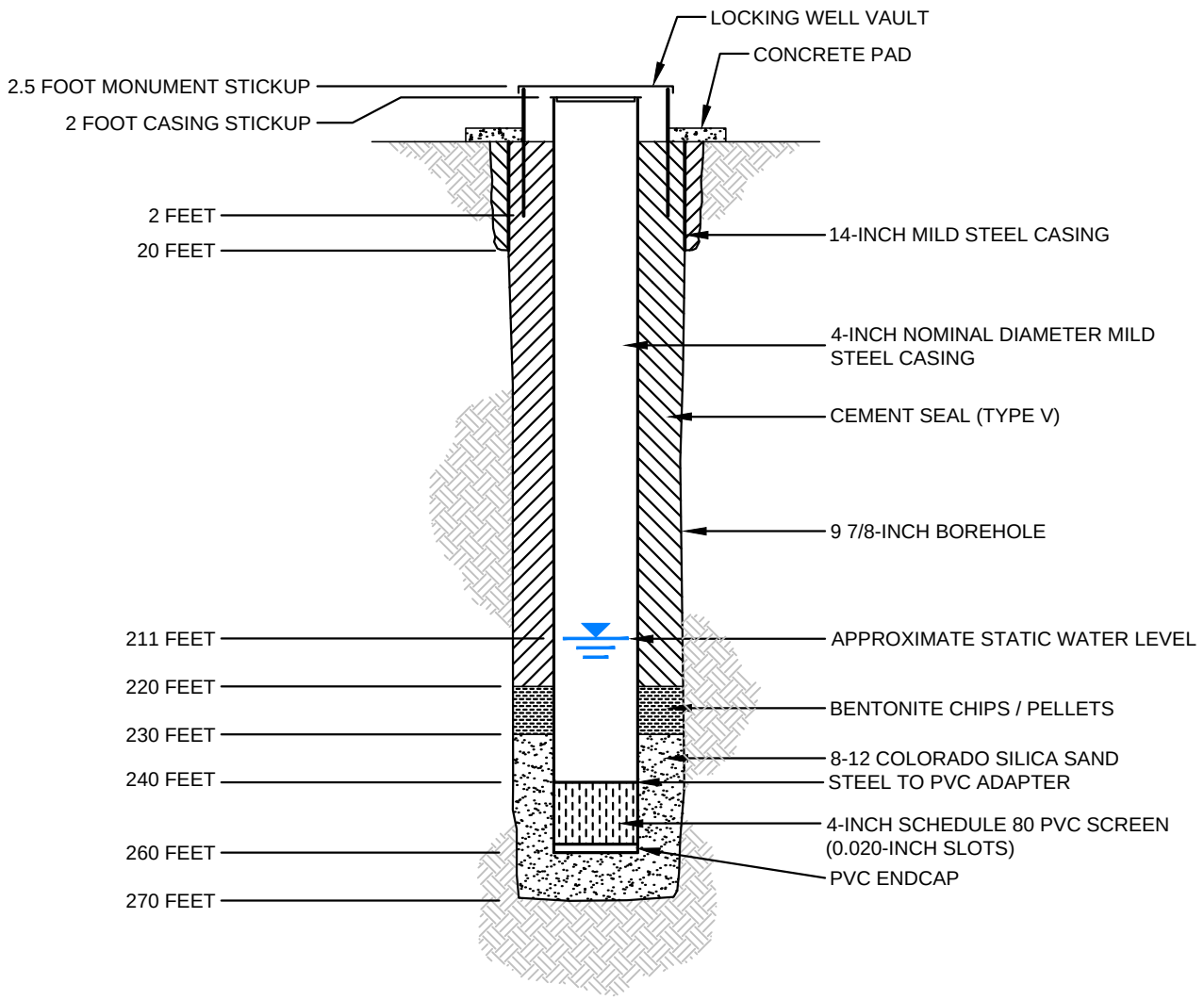

HALEY & ALDRICH

FLORENCE COPPER, INC.
FLORENCE, ARIZONA

SUPPLEMENTAL MONITORING
WELL M55-UBF DESIGN (REVISED)

FLORENCE COPPER INC.

SCALE: NOT TO SCALE
JULY 2014

FIGURE 18-2

G:\PROJECTS\CURIS RESOURCES\38706-CURIS FEASIBILITY\DRAWINGS\2014 UIC APP\WELL DESIGNS\M55_M56_WELLDESIGN.DWG

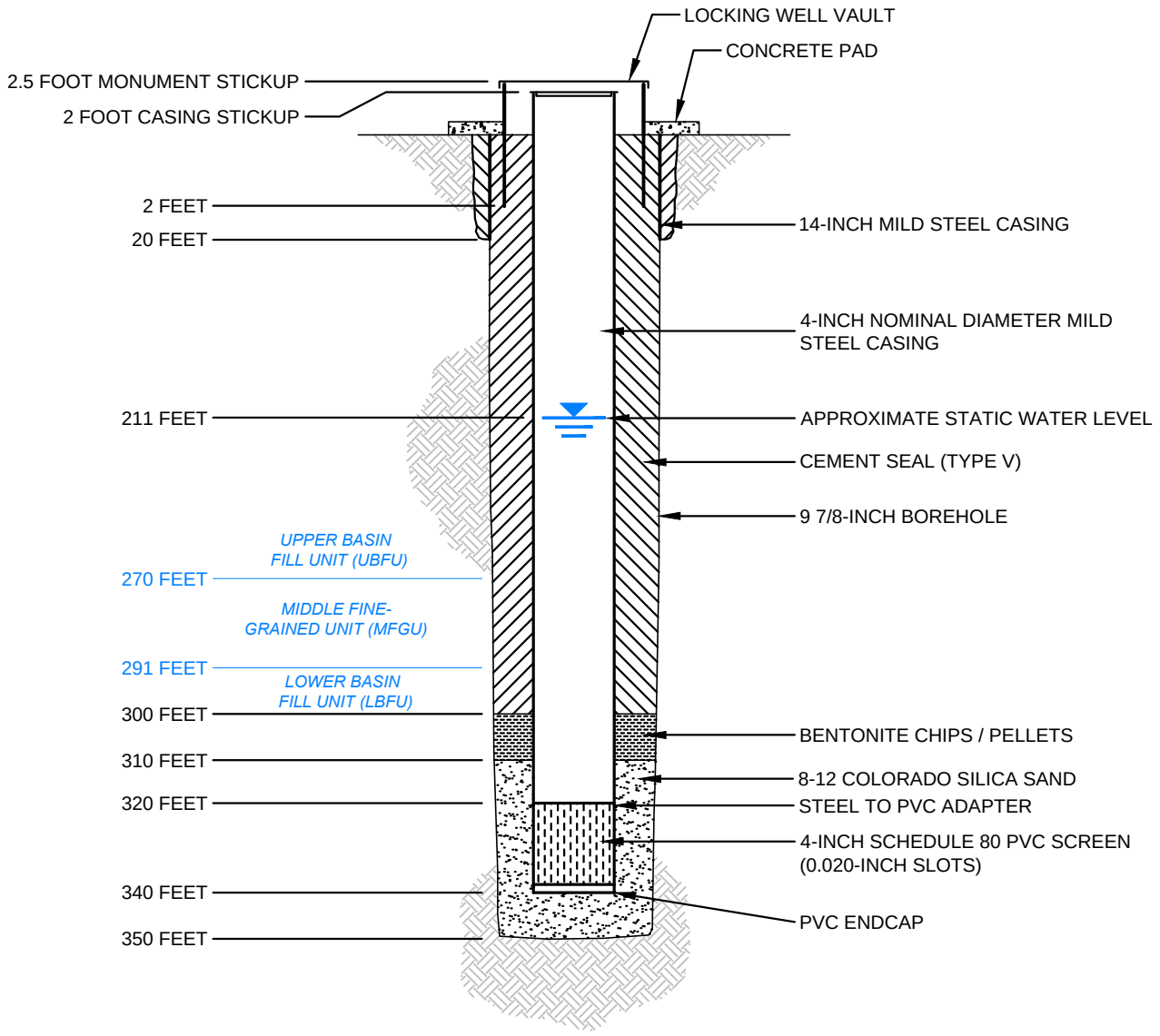

HALEY & ALDRICH

FLORENCE COPPER, INC.
FLORENCE, ARIZONA

SUPPLEMENTAL MONITORING
WELL M56-LBF DESIGN (REVISED)

FLORENCE COPPER INC.

SCALE: NOT TO SCALE
JULY 2014

FIGURE 18-3

G:\PROJECTS\CURIS RESOURCES\38706-CURIS FEASIBILITY\DRAWINGS\2014 UIC APP\WELL DESIGNS\M55_M56_WELLDESIGN.DWG

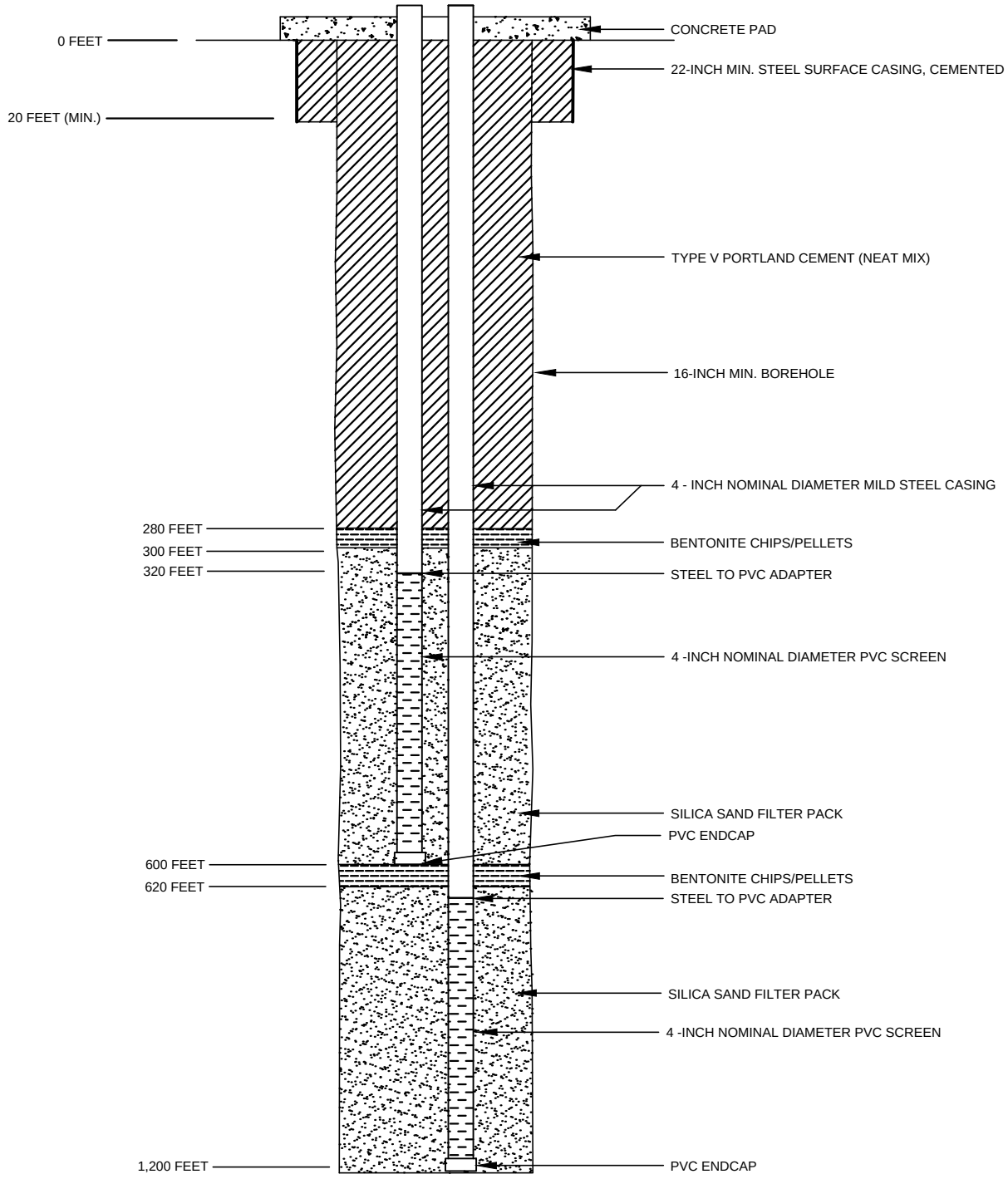

NOTE: LITHOLOGIC UNIT CONTACTS WILL BE DETERMINED ONCE THE FINAL WELL LOCATION HAS BEEN APPROVED BY ARIZONA DEPARTMENT OF ENVIRONMENTAL QUALITY

HALEY & ALDRICH

FLORENCE COPPER, INC.
FLORENCE, ARIZONA

OPERATIONAL MONITORING WELL
MW-01 PROPOSED DESIGN

FLORENCE COPPER INC.

SCALE: NOT TO SCALE
SEPTEMBER 2014

FIGURE M1-1

G:\PROJECTS\CURIS RESOURCES\38706-CURIS FEASIBILITY\DRAWINGS\JULY 2014 UIC APP\MW-01_WELLDIAGRAM.DWG