Attachment C

Sampling Plan
February 23-25, 2004

See quadrant layouts for FILL, ORGANIC SILT, and TILL

FILL	Q1	Q2	Q3	Q4	Q5	Q6	Q7	Q8	Q9	Q10	Q11	Q12	Q13	Q14
OS	Q1													
TILL	Q1								Q2					
	Collect fill sample from: 1 to 3 feet; PAH only	8 to 10 feet; PAH only	3 to 5 feet; total SVOCs	2 to 4 feet; PAHs only	5 to 7 feet; PAHs only	7 to 9 feet; total SVOCs	3 to 5 feet PAHs only	1 to 3 feet; PAHs only	5 to 7 feet; total SVOCs	2 to 4 feet PAHs only	7 to 9 feet; PAHs only	1 to 3 feet; total SVOCs	6 to 8 feet; PAHs only	3 to 5 feet; PAHs only
FILL	Q1	Q2	Q3	Q4	Q5	Q6	Q7	Q8	Q9	Q10	Q11	Q12	Q13	Q14

FILL	Q15	Q16	Q17	Q18	Q19	Q20	Q21	Q22	Q23	Q24	Q25	Q26	Q27	Q28
OS	Q2													
TILL	Q3													
	5 to 7 feet; total SVOCs	1 to 3 feet; PAHs only	2 to 4 feet; PAHs only	4 to 6 feet; total SVOCs	Collect fill sample from: 1 to 3 feet; PAH only	1 to 3 feet; PAH only	3 to 5 feet; total SVOCs	7 to 9 feet; PAHs only	9 to 11 feet; PAHs only	11 to 13 feet; total SVOCs	3 to 5 feet PAHs only	9 to 11 feet; PAHs only	5 to 7 feet; total SVOCs	3 to 5 feet PAHs only
FILL	Q15	Q16	Q17	Q18	Q19	Q20	Q21	Q22	Q23	Q24	Q25	Q26	Q27	Q28

FILL	Q29	Q30	Q31	Q32	Q33	Q34	Q35	Q36	Q37	Q38	Q39
OS	Q3										
TILL	Q4										
	5 to 7 feet; PAHs only	7 to 9 feet; total SVOCs	7 to 9 feet; PAHs only	3 to 4.5 feet; PAHs only	5 to 7 feet; total SVOCs	6 to 8 feet; PAHs only	8 to 10 feet; PAHs only	7 to 10 feet; total SVOCs	Collect fill sample from: 3 to 5 feet; PAH only	8 to 10 feet; PAH only	5 to 7 feet; total SVOCs
FILL	Q29	Q30	Q31	Q32	Q33	Q34	Q35	Q36	Q37	Q38	Q39

Notes

FILL
Q7 - Matrix spike and matrix spike duplicate collected.
Q8 - "Duplicate 1" collected
Q24 - Matrix spike and matrix spike duplicate collected.
Q27 - "Duplicate 4" collected
Q36 - "Duplicate 5" collected

TILL
Q1 - Matrix spike and matrix spike duplicate collected.
Q1 - "Duplicate 2" collected

OS
Q1 - Matrix spike and matrix spike duplicate collected.
Q1 - "Duplicate 3" collected

2-23-04 - Trip Blank 1, Trip Blank 2, Temp Blank 1, Temp Blank 2
2-24-04 - Trip Blank 1, Trip Blank 2, Temp Blank 1, Temp Blank 2

FILL 2-20-04

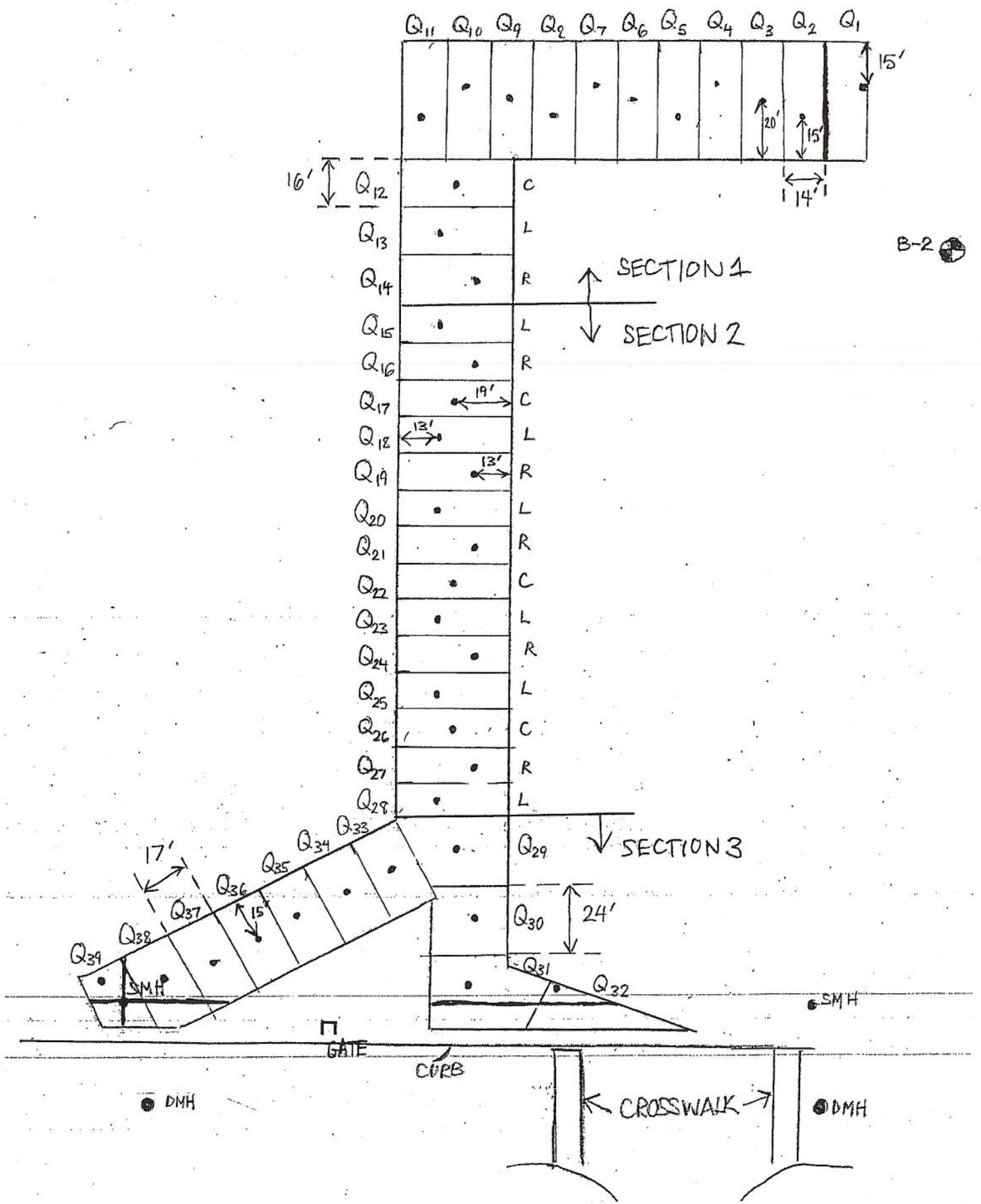

B-2

ORGANIC SILT 2-20-04

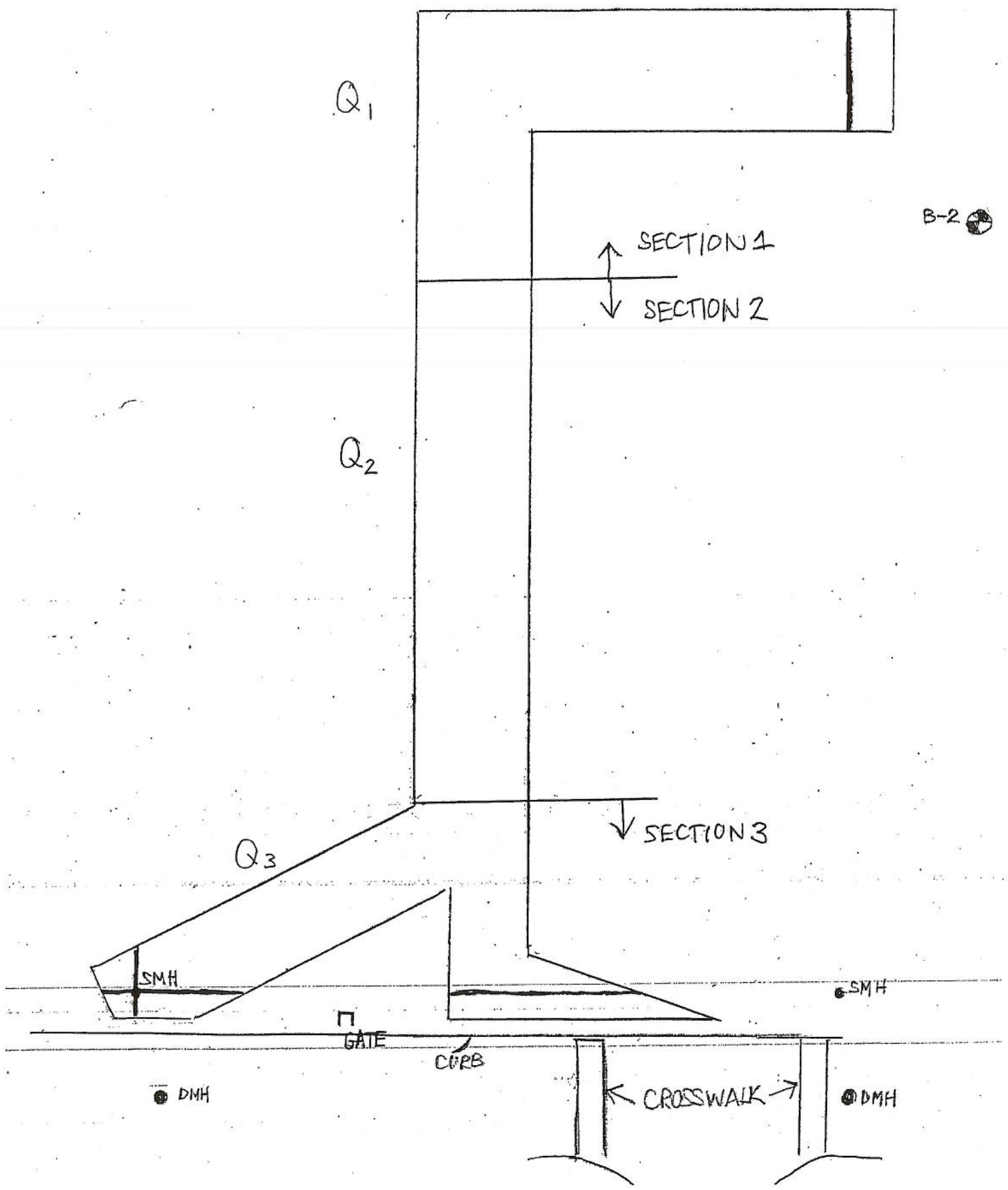

TILL 2-20-04

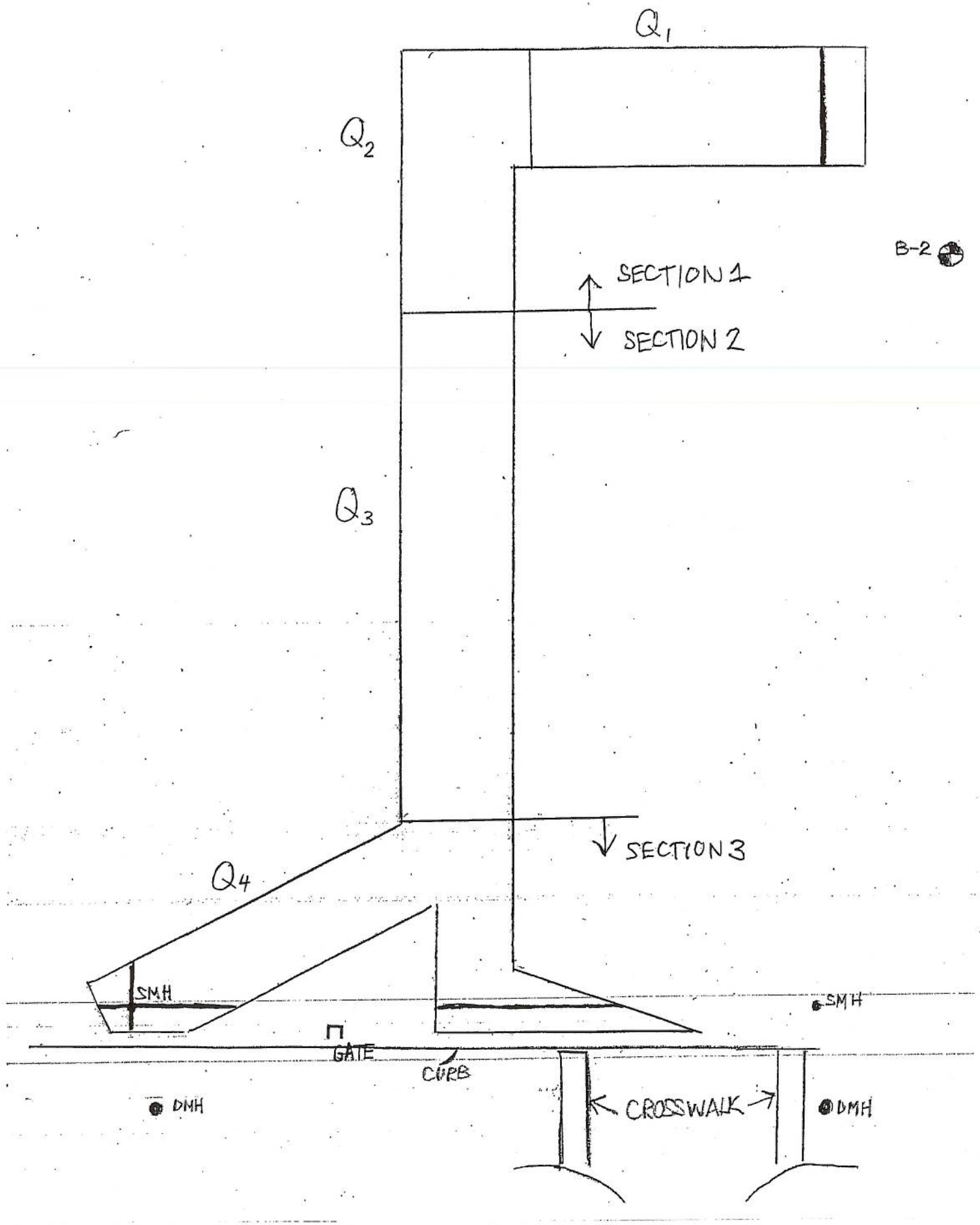
Q1
Q2
B-2
SECTION 1
SECTION 2
Q3
SECTION 3
Q4
SMH
SMH
GATE
CURB
DMH
CROSSWALK
DMH

FILL	Q1	Q2	Q3	Q4	Q5	Q6	Q7	Q8	Q9	Q10	Q11	Q12
	PAH only	PAH only	total SVOCs	PAHs only	PAHs only	total SVOCs	PAHs only	PAHs only	total SVOCs	PAHs only	PAHs only	total SVOCs
FILL	Q1	Q2	Q3	Q4	Q5	Q6	Q7	Q8	Q9	Q10	Q11	Q12

Notes

Composite samples for the fill layer will be collected from 3 to 5 feet.

Every sample will be analyzed for the following parameters:

Parameter	Anaylis
Total Metals	RCRA 8 Metals
TPH	8100M GC/FID
Total PCBs	8080
Total SVOCs*	8270
Total VOCs	8260
TCLP	1311

* Exception is SVOCs--only every third fill sample will be analyzed for total SVOCs (as specified); the rest will be PAHs only.

QA/QC

Duplicate sample to be collected from Q7
1 Trip Blank
1 cooler temperature blank
1 matrix spike
1 matrix spike duplicate

Notes

TCLP analysis will be performed only if triggered, but samples will be collected for all locations.
For VOC analysis using methanol preservation, fill sample jar to 3/4 of height of methanol.