300 Fibre Way
P.O. Box 639
Longview, WA 98632
360.425.1550
kapstonepaper.com

September 23, 2016

VIA EMAIL: hedgpeth.zach@epa.gov

Zach T. Hedgpeth
Environmental Engineer
Office of Environmental Assessment
U.S. Environmental Protection Agency (EPA)
1200 Sixth Avenue, Suite 900
Mail Stop: OEA-095
Seattle, WA 98101

Re: Requested Records - EPA Inspection (August 24th-25th)

Dear Zach:

During your site inspection at Longview Fibre Paper and Packaging, Inc. dba. KapStone Kraft Paper Corporation ("KapStone") on August 24th and 25th, 2016, you requested that the company provide you with several documents. This letter is intended to provide you the information that you requested from KapStone. We believe that this submission completes KapStone's response to all of your requests.

I have prepared this letter on behalf of KapStone and it reflects the results of our file review and process knowledge and we believe it to be complete to the best of our knowledge.

Enclosed with this letter is a compressed file that contains the referenced files (in Adobe (pdf) format unless otherwise noted).

I. Confidential Business Information

KapStone reserves the right to claim confidential business information ("CBI") status for information submitted that relates to design, processes, operation, production levels, financial and/or other aspects of the mill. KapStone is not claiming CBI status at this time for any of the information provided in its response, but requests that EPA provides it notice pursuant to 40 C.F.R. § 2.204(c)(2)(i) prior to disclosing any portion of this response.

II. Question Responses

KapStone has undertaken to provide complete and accurate responses to your requests. KapStone reserves all objections to your request and all defenses to liability that may be alleged by any regulatory agency based upon the information provided in this response or based upon any other information. KapStone does not believe it has a continuing obligation to supplement these responses based on subsequent review or document search, but it reserves the right to amend or supplement its responses if it becomes aware of additional information or documents that it considers material to the questions or to its prior responses.

The numbering of the questions below is taken from the document titled "Records Requested – EPA Inspection" dated August 25, 2016 that you provided a copy of to KapStone during your visit.

1. P&IDs for the following (focused on gas collection systems):

- *Neutral sulfite semi-chemical (NSSC) system, including chemi-washer*

  <u>Background Information on Chemi-Washer Operation</u>

  The NSSC chemi-washer is an enclosed system. A vacuum blower is utilized to draw air from beneath the wire and then inject this air back into the sealed hood above the wire. This creates a pressure differential across the wire which is a driving force for the displacement washing taking place.

  <u>EPA Method 21 Testing Data</u>
  During your visit, steam was escaping from the couch roll on the bottom part of the NSSC chemi-washer. The NSSC chemi-washer is part of the leak detection and repair (LDAR) program. In addition to the monthly visual inspections, KapStone routinely performs Method 21 (M21) on the NSSC chemi-washer to ensure there are no VHAP leaks occurring at this unit. The two most recent M21 tests were performed on 7/27/16 and 8/31/16 with VOC concentration results of 2 and 40 ppm respectively. Therefore, KapStone believes that it has demonstrated that there are no hazardous air pollutants (HAPs) leaks occurring at the NSSC chemi-washer. Attached to this letter are the drawings for the NSSC chemi-washer utilized as part LDAR M21 testing program.

Gas Collection System Diagrams

A diagram for the NSSC gas collection system is attached to this letter.

- *Messig & Durkee (M&D) digester system*

During your visit, you expressed questions about the operation of the #4 M&D Digester, the operation of its inlet valve and its gas collection system.

In 2000, Longview Fibre Company (LFCo) engaged in an extensive evaluation of how to best comply with 40 CFR Part 63, Subpart S in light of initial issues with the control system installed. After extensive dialog with EPA Region 10, LFCo concluded the best means of compliance was installation of new rotary pocket feeder valves that exhaust essentially fresh steam. LFCo identified efficient purging with fresh steam of digester vapors from the pockets of the feeder as an effective means to prevent HAPs emissions from the M&D Digester. This includes maintaining a flow of vent gases from the top of the digester body to the #6 Blow Tank, which is collected into the gas collection system and incinerated. This vent flow prevents gases from building up in the upper part of the digester and exhausting through the inlet valve.

Historical compliance information on #4 M&D digester inlet valve

There were site visits, phone conversations and extensive correspondence between LFCo at the time, EPA Region 10 and the Washington State Department of Ecology (Ecology) about LFCo's compliance approach with the inlet valves of its M&D Digesters in years 2000 and 2001 regarding requirements for National Emission Standards for Hazardous Air Pollutants applicable to the Pulp and Paper Industry found at 40 CFR Part 63, Subpart S ("Pulp and Paper MACT"). The results of this engagement resulted in a compliance determination letter issued by Ecology on July 3, 2001. A summary of this history is presented below and copies of the correspondence and other relevant documents are attached to this letter.

- Final letter to support compliance extension request including #3 and #4 M&D Digesters Inlet Valves dated August 18, 2000.
- EPA Region 10's extension request approval letter dated August 31, 2000.
- First seven monthly summary reports to EPA Region 10 in letters dated from October 13, 2000 through April 11, 2001.
- Last four monthly summary reports to Ecology in letters dated from May 15, 2001 through August 13, 2001.
- Ecology's letter dated July 03, 2001 with determination that no treatment of emissions from inlet valve at the M&D Digester was necessary if properly operated.

Compliance approach:

- Three initial options evaluated:
  - ✓ Replacing inlet valve with a pocket feeder (model 77) – option finally chosen.
  - ✓ Installation of a condensing screw conveyor (pre-steamer).
  - ✓ Installation of a plug screw feeder.

- Inlet valve replacement was rapidly identified as the optimal compliance option:
  - ✓ Borrowed inlet valve from Pope and Talbot pulp mill
    - Inlet valve installed with the operating principle of pocket purge vapors would be "essentially 100% fresh steam" coupled with digester body vapor space vent line and flow control to #6 Blow Tank.
    - Samples of the pocket purge flow were collected using the NCASI chilled midget impinge sampling train and tested for HAPs using GC-FID (Gas Chromatography – Flame Ionization Detection), reported results at stack conditions were 8 ppm on average and 15.3 ppm dry volumetric, corrected to 10% Oxygen
  - ✓ The determination used for what constitutes "essentially 100% fresh steam" was based on § 63.443(d)(2) which describes allowable emissions from the discharge of a thermal oxidizer as 20 parts per million or less by volume, corrected to 10 percent oxygen on a dry basis. – This is

found in the third monthly update to EPA dated December 12, 2000.
– Note email from Penny Lassiter clarifying that the intent of the rule was to control waste or flash steam and not situations where fresh steam is used. Please note the reference to an M&D Digester case.

- ✓ Valve on #4 M&D Digester was installed and tested for HAPs using same method, results averaged 8 ppm total HAPs similar to the borrowed valve, testing results included in eight monthly summary to Ecology dated May 15, 2001.

<u>EPA Method 21 and HAPs Testing Data</u>

KapStone routinely tests the two fresh steam vents associated with the operation of the #4 M&D Digester inlet valve utilizing M21 in order to help verify proper operation. Results of the last three years were 1 and 1 ppm in 2014, 13 and 14 ppm in 2015 and 3 and 3 ppm in 2016. Attached to this letter is the drawing for the #4 M&D Digester fresh steam vents utilized as part of the LDAR M21 testing program.

As recent as 09/16/2016, KapStone collected samples and performed testing using a chilled midget impinger sampling train and tested for HAPs using GC-FID. Reported results at stack conditions were 7 and 3 ppm on each stack respectively. These results were essentially the same as those obtained in the 2000 – 2001 testing events utilizing these same sampling and testing methods.

<u>Gas Collection System Diagrams</u>

A diagram for the 4 M&D Digester gas collection system is attached to this letter.

- *Kamyr Digester – Gas Collection System Diagrams*

A diagram for the No. 1 Kamyr Digester gas collection system is attached to this letter.

2. Pressure relief valve relief pressures (documentation).

- (b) (4) [redacted]

- (b) (4) [redacted]

3. Documentation that other M&D Digesters besides #4 are either not permitted to operate or have been permanently decommissioned.

- No. 3 M&D Digester – Condition 5 of Notice of Construction Order No. 9213 issued by the Washington State Department of Ecology (Ecology) issued on July 26, 2012 prohibits the operation of this unit. The unit was shut down and last operated in October 2008.
- No. 5 M&D Digester – As noted in the letter to Ecology dated August 13, 2001 that constituted the eleventh and final monthly report on progress towards bringing the M&D Digesters into compliance with the Pulp and Paper MACT requirements. LFCo at the time notified Ecology that it would no longer operate No. 5 M&D Digester. This unit was a backup that was rarely run and it was not likely in operation in 2001. A letter to Ecology dated October 20, 2008 lists March 2001 as the retirement date.

4. Design information on Ducon scrubbers controlling Power Boiler No. 20 (PB20).

(b) (4) [redacted]

(b) (4) [redacted]

In addition to the four items above, you expressed interest in No. 6 Line Foam tank. Attached to this letter is a diagram of No. 6 Washer Line submitted to Ecology as part of the "Compliance Determinations: MACT 1, Phase 2 High Volume, Low Concentration Sources and Clean Condensate Alternative Proposal for Longview Fibre Company" on December 28, 2004. Please note that the No. 6 Foam Tank vent emissions were included in the CCA evaluation of No. 6 Washer Line at the time.

With this response, KapStone believes that it has answered all of your questions. If you believe that this is not the case, please let me know immediately what you believe to be outstanding.

Sincerely,

Roberto A. Artiga
Environmental Services Manager
KapStone Kraft Paper Corporation

Attachments

cc: Pat Ortiz, KapStone
Paul Duncan, KapStone
Tom Wood, Stoel Rives
Stephanie Ogle, Ecology

(b) (4)

(b) (4)

(b) (4)

STATE OF WASHINGTON
DEPARTMENT OF ECOLOGY
P.O. Box 47600 • Olympia, Washington 98504-7600
(360) 407-6000 • TDD Only (Hearing Impaired) (360) 407-6006

July 3, 2001

Mr. Steve DuVall
Longview Fibre Company
P.O. Box 639
Longview, WA 98632

Dear Mr. DuVall:

I am writing in response to information LVF submitted concerning M&D continuous kraft sawdust digester (M&D) compliance with 40 CFR Part 63, Subpart S. LVF originally determined HAPs emission reduction or capture from the M&D feed system was necessary for compliance.

LVF submitted information dated December 12, 2000 demonstrating total HAPs emissions from #4 M&D were <20 ppm during a trial period using a more modern pocket feeder. 40 CFR 63.443(d)(2) specifies emissions from a thermal oxidizer used to reduce HAPs emissions be ≤20 ppm total HAPs. LVF concluded that when the more modern pocket feeder was properly operated, #4 M&D emissions where less than the level of treatment required and were essentially "fresh steam" requiring no treatment.

LVF ordered a more modern pocket feeder (model 77) and installed the unit on #4 M&D. Information submitted on May 15, 2001 demonstrated total HAPs emissions were <20 ppm when #4 M&D was properly operated. LVF identified efficient purging of digester vapors from the pockets of the pocket feeder as necessary to prevent HAPs emissions from the M&D. Proper operation and maintenance includes maintaining a flow of M&D vapors from the top of the digester body to the blow tank system. The blow tank system is connected to the LVHC closed vent system.

Ecology agrees no treatment of emissions from the model 77 feed system at the M&D units is necessary when the units are properly operated and maintained. LVF is reminded that proper operation and maintenance is required at all times per WAC 173-405-040(10).

If you have further questions please contact me at 360-407-6773.

Sincerely,

Marc Heffner

Marc Heffner
Industrial Section

cc: Mr. Kai Hon Shum, EPA Region 10

pocket.DOC

LASSITER.PENNY@epamail.epa.gov

04/21/1998 11:42 AM

To: Bill Dameworth/POPTAL
cc:
Subject: Re: Cluster Rules -Reply

To: Bill Dameworth, Pope and Talbot - Halsey, OR

I apologize for not responding to your E-Mail. As you can imagine, I am getting many questions from all over the industry and States. My problem is that I am getting similar related questions set in a specific mill context. We are working to compile the questions and responses to put into a guidance document. I am reluctant to tell one mill something at this point for fear of telling another mill something different.

Your question on the chip steamer has been a very "popular" question in the industry. Unfortunately, the question has been posed differently every time I've heard it. I have had some communication with Rob Kaufmann of AF&PA. I have requested some diagrams and some writeups to help me understand the problem. I understand that AF&PA is putting something together, but I have not received anything to date. The questions I have received thus far have related to Impco and Kamyr continuous digesters. I'm not familiar with the M&D digester so I don't know how it compares to these two. The intent of the rule is to control venting off the chip steamers and venting off of the chip bin if the chip steamer vents through the chip bin where waste or flash steam is used. As I recall, we did not intend to capture situations where only fresh steam is used.

UNITED STATES ENVIRONMENTAL PROTECTION AGENCY
REGION 10
1200 Sixth Avenue
Seattle, WA 98101

AUG 31 2000

Reply To
Attn Of: OAQ-107

Certified Mail - Return Receipt Requested

Mr. Thomas E. Vaught
Vice President - Manufacturing Services
Longview Fibre Company
Main Office and Mills
Longview, Washington 98632

Re: Compliance Extension for the Pulp and Paper MACT

Dear Mr. Vaught:

On August 21, 2000, the United States Environmental Protection Agency(EPA), received a letter dated August 18, 2000, from Longview Fibre which provided the latest additional information concerning your company's application for a one-year extension to comply with the National Emission Standards for Hazardous Air Pollutants applicable to the Pulp and Paper Industry found at 40 C.F.R. Part 63, Subpart S ("Pulp and Paper MACT") at your Longview, Washington, facility. Longview Fibre's facility is subject to the Pulp and Paper MACT, wherein, the compliance date is April 16, 2001.

Pursuant to 40 C.F.R. Part 63.6(i)(4)(i)(A), Longview Fibre may request up to one additional year to comply with the Pulp and Paper MACT, if such time is necessary for the installation of controls. In Longview Fibre's August 18 submission, Longview Fibre requested two extensions. One request was for a one-year extension to meet emission standards at 40 C.F.R. 63. 443 (Standards for the pulping system at kraft, soda, and semi-chemical processes) in order to install a low volume, high concentration ("LVHC") system. The second request was for an extension to conduct performance testing on the facility's dedicated control device.

EPA grants Longview Fibre's request for a one-year extension to comply with 40 C.F.R. 63. 443 (Standards for the pulping system at kraft, soda, and semi-chemical processes) in order to install the LVHC system, specific to the three Messing & Durkee (M & D) sawdust digesters, designated #3, #4, and #5. EPA grants the extension with the following conditions:

1. Longview Fibre shall submit monthly progress reports to EPA. Progress reports shall include progress made during the previous month, and a description and a schedule for completing the project. These progress reports shall be addressed to:

Mr. Kai Hon Shum (OAQ-107)
U.S. EPA Region 10
1200 Sixth Avenue
Seattle, WA 98101

Printed on Recycled Paper

and copies shall be sent to:

Mr. Merley McCall
Washington State Department of Ecology
300 Desmond Drive
Lacey, WA 98503

2. This extension is limited to a maximum of one-year in duration, which expires no later than April 15, 2002. This extension will terminate prior to April 16, 2002, upon written notification by EPA, if Longview Fibre demonstrates compliance with the emission standard specified in 40 C.F.R. 63. 443 (Standards for the pulping system at kraft, soda, and semi-chemical processes) due to the installation of new pre-steamers prior to April 16, 2002.

The letter also informs Longview Fibre that EPA intends to deny Longview Fibre's request related to a one-year extension to conduct performance tests on the dedicated control device. EPA intends to deny this request because it is not related to the installation of pollution controls which is a required condition for an extension under 40 C.F.R. 63.6(i)(4)(i)(A). Pursuant to 40 C.F.R. 63.6(i)(12)(iii)(B), Longview Fibre has the opportunity to present in writing within 15 calendar days of your receipt of this letter, additional information or arguments to EPA before further action on this request.

If you have any questions concerning this letter, please do not hesitate to contact Mr. Kai Hon Shum at (206)553-2117.

Sincerely,

Dan Meyer for
Douglas E. Hardesty, Manager
Federal and Delegated Air Programs Unit

KHS:DEH:cb

cc: Robert Carruthers, Ecology
Merley McCall, Ecology

file - Sect I - EPA - Air - Correspondence

LONGVIEW FIBRE COMPANY

MAIN OFFICE AND MILLS • LONGVIEW, WASHINGTON 98632
1-360-425-1550

August 18, 2000

Mr. Douglas E. Hardesty, Manager
Federal and Delegated Air Program Unit
United States Environmental Protection Agency, Region 10
1200 Sixth Avenue
Seattle, WA 98101

Dear Mr. Hardesty:

This letter is provided in response to a verbal request made by Kai Hon Shum during his August 8th visit to the Longview Fibre Company Kraft pulp and paper mill located in Longview, WA. Accompanying Kai Hon Shum were Mr. Dan Meyer, USEPA, and Mr. Marc Heffner, Washington Department of Ecology. The purpose of their visit was to better understand Longview Fibre Company's one-year extension request of the April 16, 2001 compliance deadline established by 40 C.F.R. Part 63, Subpart S, National Emission Standards for Hazardous Air Pollutants applicable to the Pulp and Paper Industry.

Our initial request, dated April 7, 2000, was received April 10, 2000 and determined to be incomplete as explained in a letter to Mr. Thomas E. Vaught dated May 10, 2000. Additional information was submitted in a letter dated June 12, 2000 and received by USEPA on June 26, 2000.

USEPA responded with a completeness determination letter addressed to Mr. Thomas E. Vaught dated July 25, 2000. At that point, as explained in the July 25th letter, USEPA had 30 days to provide a written determination to either grant, or to signify intent to deny the application for an extension. Kai Hon Shum, et al., then visited the mill to see our situation first hand as a necessary step in making that determination.

We appreciate EPA's willingness to understand our situation with respect to the two issues outlined in our letter of June 12, 2000. Further progress has been made and additional information has become available which we believe is important for you to have prior to making your determination to grant, or your intent to deny our extension application.

Our letter of June 12 specifically addressed two concerns. The first concern centered around installing LVHC System controls (as defined in § 63.441) on our Messing & Durkee (M & D) continuous kraft sawdust digesters. This is required under § 63.443(a)(1)(i).

We currently operate three M & D sawdust digesters, designated #3, #4, and #5. Our intent was to install controls on #3 and #4. No. 5 would be shutdown on or before April 16, 2001 and be restarted only after similar controls were installed. Our plan was to install controls on #3 M & D first. Once #3 was modified and operating properly, we would have installed controls on #4 M & D. Our timeline originally provided enough lead-time to allow both #3 and #4 M & D's to be made compliant before the original April 16, 2001 deadline.

We have previously provided detailed information, which outlines the initial timeline. The new system, a "condensing screw conveyor (pre-steamer)" does not operate properly and we do not believe it can be made to work as designed and installed. Attached is a summary of information that was presented during the August 8 EPA visit, which details the initial timeline and the problems encountered when we attempted to operate the control equipment properly. It also details the steps we took trying to make the control equipment operate. These changes were recommended by the equipment supplier but did not correct the problems.

Under the provision of 40 C.F.R. Part 63, Subpart S, specifically § 63.6 (i) 4(i) A, we believe we are justified in requesting additional time to redesign controls for our #3 and #4 M & D sawdust continuous digesters. We are currently exploring three options that we believe may enable us to make these two digesters compliant with the standards of 40 C.F.R. Part 63, Subpart S.

The first involves replacing the rotary inlet valve. We have discussed this situation with other members of the pulp and paper industry and have information which leads us to believe that a different style of rotary inlet valve would reduce HAP emissions and total vapor flow to a low enough level that would allow the M & D digesters to become compliant with the standard. We are arranging a trial by borrowing a valve to install at our mill. Users of this type of valve report that a more efficient pocket purge using fresh steam eliminates HAP emissions and would not require additional controls. At that time we would repeat testing for HAP's emissions. If low emissions are verified, we would have three of our valves converted, one at a time, and install the converted valves at #3 and #4 with the third becoming a spare. If this option succeeds, we would be in compliance by April 16, 2001 and would not need the compliance extension.

The second option occurs if our testing shows that HAP's emissions are significant enough to still require LVHC controls. We would determine if the new style valve allows the currently inoperable installed controls to operate properly. This assumes that vapor flow is significantly reduced and we are able to solve the loss of wood plug problem. This scenario would also provide compliance by April 16, 2001, and therefore, would not require an extension for either #3 or #4 M & D under the proposed timeline.

At this time, it is not known whether either of these are 100% positive to work properly hence, the third option of investigating the installation of a plug screw feeder. These devices currently are in use by the industry, but only on chips. They have not been used on sawdust, which is the raw material we use in the M & D continuous digesters. As discussed with Kai Hon Shum, we are anxiously awaiting a firm proposal with performance guarantees from the proposed equipment supplier. Two questions exist for this system. First, can the device be made to work on sawdust? Second, if it works, will there be any deleterious effects on pulp quality? This option will require the requested compliance extension. We would order two systems, one complete with motor and variable speed device, one with just the plug screw feeder since that piece of equipment has the ~10 month delivery date. We would convert one of the cookers and begin trying to run the new system. If successful, we would order the second system motor and variable speed device. Under this scenario, the first cooker would be compliant by about October 2001 and the second on or before April 16, 2002, within the requested one year extension. The second option would cost ~ $1,000,000 per cooker and we would not be able to use any of the equipment purchased for our original compliance plan. Attached to the letter are our best estimates of the time lines for the various options discussed above.

The second request in our June 12 letter dealt with requesting an extension of the performance testing requirements of § 63.457(a), as specified in § 63.7(a)(2), for the dedicated control device we have installed to collect and treat pulping process condensates as required by § 63.446(c)(3) and § 63.446 (e)(4). We have designed and installed innovative technology using the UNOX, elemental oxygen, activated sludge process to treat pulping process condensates biologically. At issue here is the temperature sensitive nature of this biological based treatment system. We have just begun operation in what we believe is a mode very near our final equipment configuration but we have the following work left to do:

(1) We are still in the process of fine tuning the conversion of our multiple effect evaporators.

(2) We have discovered a problem with a key heat exchanger necessary to cool the pulping process condensates. There is a long lead-time to obtain a replacement, so we have taken steps to control condensate temperature by cool water dilution. This is a temporary fix, at best.

(3) We are still on the learning curve for items like oxygen demand and necessary micro-nutrients.

(4) There is the seasonal temperature variation.

(5) Operation of the secondary treatment plant under our NPDES permit needs to be refined. Since the startup of our dedicated control device there has been a significant reduction of food to this biological system which will require changes that could effect the dedicated control device.

We still have lots of unanswered questions. We expect to have all projects completed, with the exception of the heat exchanger replacement, by April 16, 2001. However, we know that seasonal temperature variation of our primary water supply varies from 48°F in winter to ~75°F in late summer. A single compliance test within 180 days of the initial compliance date (April 16, 2001) will not allow for these seasonal variations. We propose a minimum of 3 compliance tests be performed in a one year period so we can confirm proper operation during the extremes of seasonal variation (hot & cold), and one at an average temperature.

Our sampling, and 60-day averages so far indicates that we are already collecting in excess of 7.2# HAPs/ODTP and treating in excess of 6.6 # HAPs/ODTP as required by § 63.446(c)(3) and § 63.446 (e)(4) as illustrated by the attached example data sheet for one day, but feel more information is vital to allow us to understand the variability in collection and treatment.

Please contact us for any questions you may have concerning this information. You can contact Mr. Al Whitford, Environmental Manager, or Mr. Steve DuVall, Senior Air Quality Engineer at the following numbers:

Mr. Al Whitford	(360) 575-5576
Mr. Steve DuVall	(360) 575-5584

Again, we appreciate your willingness to consider our extension requests.

Sincerely,

Tom Vaught

Thomas E. Vaught
Vice President-Manufacturing Services and
Assistant Mill Manager

Attachments (3)

CC: TEV/JHS/RJP,RBP,ADW,SDD,File
Kai Hon Shum, USEPA
Dan Meyers, USEPA
Marc Heffner, Dept. of Ecology
Llewellyn Matthews, NWPPA

INTEROFFICE MEMORANDUM

LONGVIEW FIBRE COMPANY

DATE August 8, 2000

FROM Scott Dolphin

TO Ron Domreis **COPIES**

SUBJECT #3 cooker Milestones

6/98 – started developing preliminary scope and cost for the cookers

1/99 – began looking at proposals from Andritz and Ahlstrom

2/25/99 – Andritz presentation at our millsite

3/16/99 – Ahlstrom presentation at our millsite

6/1/99 – capital authorized to proceed with project ($1,140,000)

7/7/99 - ordered presteamer from Ahlstrom/begin work on detail engineering

10/13/99 - original delivery date for presteamer

1/31/00 - actual delivery date of presteamer(presteamer took much longer to design than Ahlstrom had anticipated causing this delay)

2/7/00 - began running pipe for presteamer installation

4/3/00 thru 4/17/00 - #3 cooker shutdown for final installation of the presteamer

4/18/00 thru 4/26/00 - numerous attempts at starting up presteamer.

Major problems:

-inadequate horsepower

-vapor leakage past the sawdust plug

-plugging in the outlet section between the presteamer and the inlet valve

-pocket steam flow more than what we expected (scrubber too small)

4/26/00 – Ahlstrom reps come out to trouble shoot their equipment

5/2/00 thru 5/30/00 - Ahlstrom works on modifications to their presteamer

6/1/00 - begin work on modifications in the field

- trim flighting back on upper screw
- remove anti-rotation bars in screw housing
- install larger motor and vsd
- modify transistion chute between presteamer and inlet valve
- install breaker bar on screw

6/12/00 – more attempts to run. Ahlstrom rep out to supervise start-up

- unable to achieve full production rate
- plug still not adequate to contain vapors
- sawdust backing up between inlet valve and presteamer
- drive belts failing

6/19/00 – sent sawdust samples to Valmet to consider a plugscrew feeder/ began talking with Andritz about better inlet valve design

6/29/00 – received preliminary quote from Valmet (ax. $500,000 for equipment and 9-10 month delivery)

6/20/00 – extended exhaust line to cyclone and installed larger drive belts

6/22/00 – tried to run again, saw slight improvement, though still limited to about 200ton/day

6/28/00 – blanked nozzles to presteamer (all steam going to cyclone)

6/29/00 – started up again, worked better but couldn't get much above 250 ton/day/ plug in screw is still not adequate to contain vapors without wood feeding

- discovered line to #6 blow tank was plugged with stock

7/5/00 – inplugged line to #6 blow tank

7/13/00 – tried to run again but line had plugged up again

7/17/00 – unplugged line to #6 blow tank again

8/1/00 – received final quotations from Andritz to modify our inlet valve to newer design.

8/8/00 – to date have spent over $550,000 on this project

(b) (4)

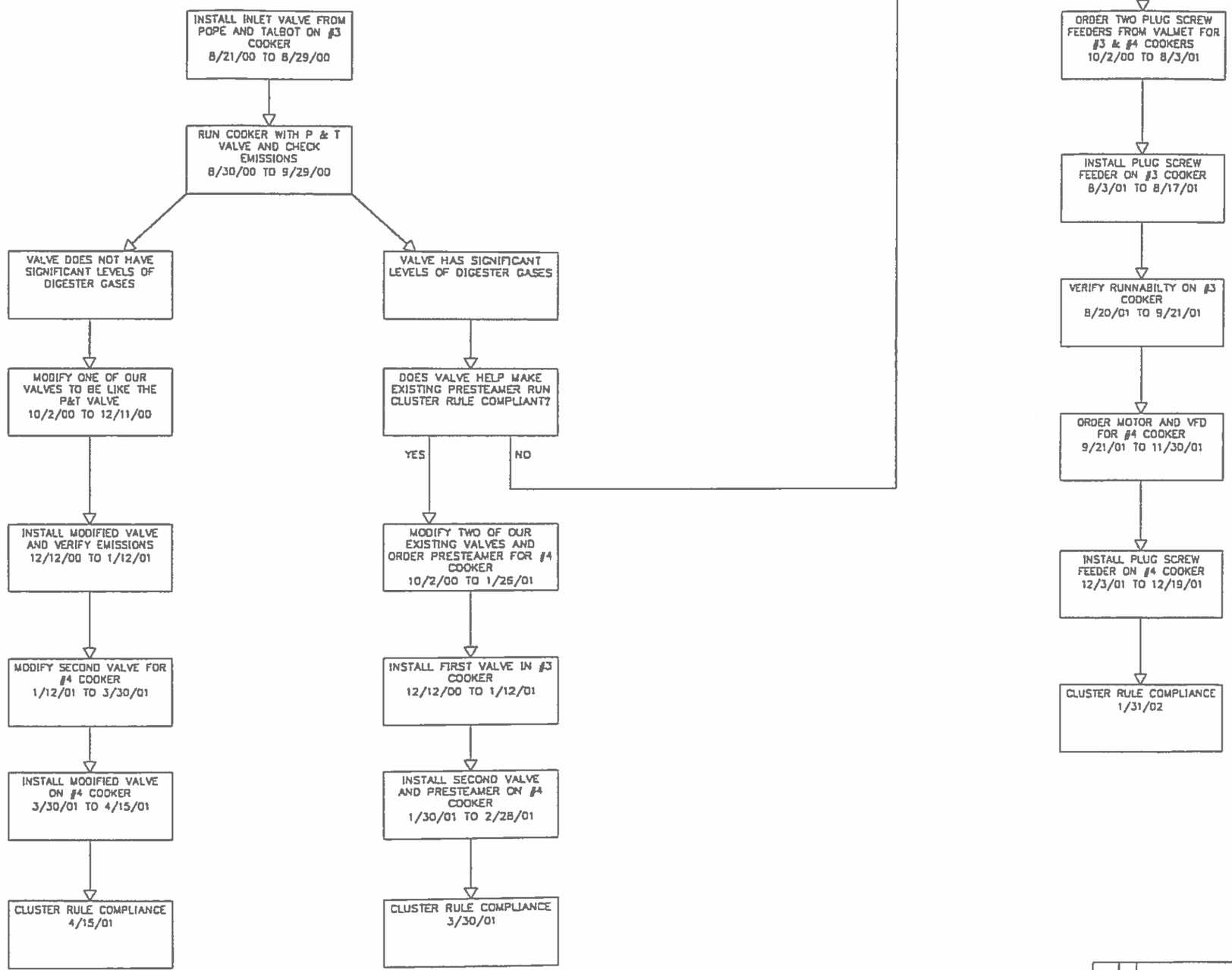

COPIES ISSUED

APPROVED

By _____ Date _____

By _____ Date _____

W.O. No.	Change

Appd	No	REVISIONS	By	Date

LONGVIEW FIBRE COMPANY
LONGVIEW, WASHINGTON

KRAFT CONTINUOUS PULPING
#3 AND #4 COOKERS
CLUSTER RULE TIMELINE

SCALE NONE DATE 8/11/00

MADE BY SWO COMPT. NO 0600-00 DWG. NO

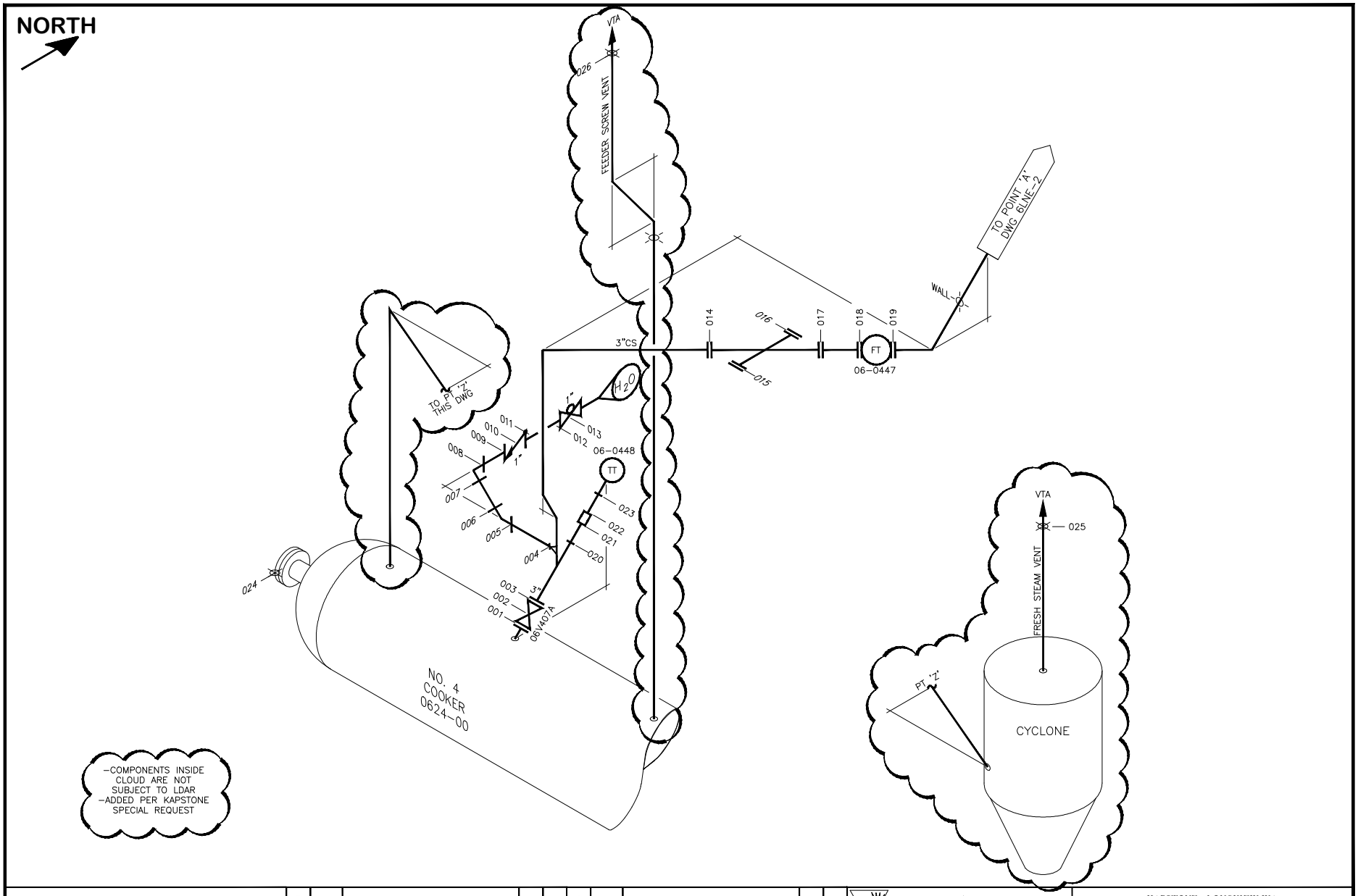

REGULATION: 40 CFR 63 Subpart S
REGULATION:

P&ID: 65945-C(A)
P&ID:
P&ID:

No.	DATE	DESCRIPTION	DR	CK
7				
6				
5				
4				

No.	DATE	DESCRIPTION	DR	CK
3				
2				
1	DEC 2013	ADDED COMPONENTS 024-025 AND CLOUD NOTATION; REVISED PER WR-1009	ACJ	AWC
0	JUNE 2013	INITIAL DRAFT LDAR PROGRAM SETUP	ASA	BKJ

PROACTIVE ENVIRONMENTAL SERVICES

Unit:	Area:	Floor:
6 LINE	4 COOK	3

KAPSTONE - LONGVIEW WA

NCG's FROM #4 COOKER

Drawing No.: **6LNE-1**

Section 1 – Fed. EPA – HIN Corresp.

LONGVIEW FIBRE COMPANY

MAIN OFFICE AND MILLS • LONGVIEW, WASHINGTON 98632
1-360-425-1550

October 13, 2000

Mr. Kai Hon Shum
Environmental Engineer
United States Environmental Protection Agency
Region 10
1200 Sixth Avenue, OAQ-107
Seattle, WA 98101

Dear Mr. Kai Hon Shum:

This letter constitutes the first monthly report to you concerning our progress toward installing controls required by 40 CFR Part 63, Subpart S, National Emission Standards for Hazardous Air Pollutants applicable to the Pulp and Paper Industry, at our M&D, continuous kraft sawdust digesters, as stipulated in the letter dated August 31, 2000 from Mr. Douglas E. Hardesty to Mr. Thomas E. Vaught.

As you will recall, the control system that we installed at our #3 M&D continuous kraft sawdust cooker did not operate properly as delivered by the equipment manufacturer. We have attempted to modify it hoping to make it operate properly but did not succeed. As explained to you during your August 8, 2000 visit to our mill, we are working on multiple alternatives toward installing operable controls. These alternatives are listed below:

Alternative #1. Borrow a different style rotary pocket feeder valve from the Pope and Talbot pulp and paper mill and run a trial with that valve to see if the currently installed inoperable controls could be made to work. If successful, we would convert our valves to that configuration and proceed with the installation at #3 and #4 M&D continuous kraft digesters. Another option of this alternative is to replace the entire existing wood bin system with a new one mounted directly above the currently installed system so that the entire contents of the bin could be used to condense vapors instead of the small volume of wood that passes through the condensing screw system.

Alternative #2. Design an entirely new system around a plug screw feeder system offered by a different supplier. This would involve "throwing away" the inoperable system and starting all over again with the design and installation of the new system.

Alternative #1 Progress:

Four Longview Fibre Company people representing engineering, operations, and mechanical visited the Pope and Talbot mill on August 9th to determine if their valve would mount on our cooker. They determined that it would fit and arrangements were made to borrow the valve which arrived at Longview Fibre on August 16th. The cooker was shutdown and work to remove our valve began on August 21st. The borrowed valve was installed and the changes to the steam, oil, and gland water piping were completed by August 29th. We first attempted to run the system with the borrowed valve on August 29th. We operated a total of 42 hours over the course of the next few days but only at minimum rates. The volume of vapors was reduced but still in excess of the capacity of the condensing screw feeder system. We were able to sample the borrowed valve pocket purge vapors for HAPs using a chilled mini-impinger system. Preliminary results showed variable operation with HAPs concentrations ranging from about 3 ppm to about 50 ppm.

We encountered mechanical difficulties starting on the night of September 2nd. We first had a failure of the condensing screw feeder drive belt. It was replaced but then we could not control the rotary pocket valve plug position. The device that controls the plug position is called a "limitorque". A spare limitorque was installed by September 5th, but it would only work for a few seconds before it bound up and would not operate at all. Another limitorque was installed by September 7th and we attempted to restart. The #3 M&D continuous kraft digester ran for while but the digester began have problems with the main digester drive which is the flight conveyor inside the digester body that moves the sawdust down through the cooking liquor and then back up to the discharge point into the next vessel in the system. The entire system was shut down by September 8th and repairs were begun. During the period September 2-8 we operated the cooker a total of about 49 hours. One additional HAP's sample was taken on the 8th. During repairs we discovered that the lower end conveyor roller assembly had failed forcing us to replace the roller assembly and the conveyor. Repairs were completed on September 29th and the digester was restarted.

Our trial of the borrowed valve continues but will soon be completed. While it has reduced the amount of vapors going to the condensing screw feeder, it has not reduced them to the point where we can collect them all. Our testing of the HAPs content shows that the content is variable and further testing will be required to determine what operating mode reduces the HAPs to a negligible level that would allow us to vent them into a chip bin as described in the March 31, 2000 Questions and Answers (Q&A's) for the Pulp and Paper NESHAP, Second Volume, 40 CFR Part 63, Subpart S in sections §63.443(a)(1)(i). This is the option to the first alternative as described above. Testing of the vapors on September 8 again showed about 50 ppm total HAPs. More testing is planned.

Additional problems remain with the current system. It is not able to operate at normal capacity. The system is designed for about 400 wood tons per day but can only attain about 250 wood tons per day now. It is difficult to start and loses the wood "plug" often which causes serious blow backs of sawdust and pulping vapors. These are unacceptable operating conditions and will force us to abandon this system unless these problems can be solved soon.

Alternative #2 Progress:

This option involves designing a new feed system and ordering a device called a "plug screw feeder". We have been waiting for the equipment supplier to provide us with a firm price quotation and performance specifications. We finally received the quote on September 14th. Our engineering staff reviewed the quote and had questions that were answered by the supplier on September 20th. We know that plug screw feeders work well on chips but were concerned about how well it would work on sawdust. The main concern was how much sawdust is lost through the plug screw feeder screen, the tube that the plug is formed in. This sawdust would have to be recovered and re-introduced into the wood feed system. Initial indications are that the sawdust losses are about 5% but recovery and re-introduction is viable.

Another issue is pulp quality. It is a known fact that plug screw feeders damage the wood which reduces pulp strength. We are still pursuing this issue. We have a design engineer assigned essentially full time to this project and he will remain on the project until compliance is achieved. Attached are copies of the quote for the plug screw feeder alternative and the follow-up correspondence. We are actively pursuing Alternative #2 in the event that our efforts concerning Alternative #1 do not succeed.

Attached is an updated timeline for the alternatives I've discussed above. I've also attached a summary timeline for Alternative #1 events for the period up to the end of September, 2000.

Please contact me for any questions you may have concerning this progress report.

Sincerely,

Steven D. DuVall
Senior Air Quality Engineer
Longview Fibre Company

CC: TEV/JHS/RJP,RBP,FSB,ADW,RJD,SWD,PWO,File
Marc Heffner, Department of Ecology

ALTERNATIVE #1 EVENTS TIMELINE

Date:	Event:
8/9	Longview Fibre Company group visits Pope & Talbot mill to research possibility of borrowing a new style valve to try on #3 cooker.
8/16	Received borrowed valve from Pope & Talbot.
8/21	#3 cooker shut down and work begins to remove existing valve.
8/29	Installation of borrowed valve and all piping changes complete, #3 cooker restarted. #3 cooker runs for a total of 42 hours over the next few days.
9/2	Condensing screw feeder drive belts fail. They are replaced. Upon start up we have trouble controlling plug position.
9/5	First spare limitorque installed but will not operate properly.
9/7	Second spare limitorque installed. It operates "OK"
9/8	Problems with main cooker drive cause entire system to be shut down for repairs. Lower roller assembly fails and internal cooker conveyor is replaced.
9/29	Repairs to #3 cooker are finally completed and cooker is restarted. Operational trials and HAPs testing resume.

valmet
A member of Metso Corporation

VIA Email

September 14, 2000

Mr. Scott Dolphin
Longview Fibre Company
PO Box 639
Longview, Washington 98632

Subject: Rotary Valve Replacement
Our Reference # 2000-041/1

Dear Scott:

We are pleased to forward our Firm Price Proposal for replacing your existing rotary valve feeding system to the M&D digester with a plug screw feeder arrangement.

Our scope of supply will start at the new inlet chute to the new plug screw feeder, model SFA-420 that will discharge into the new tee-pipe assembly that connects to your existing M&D digester inlet flange connection generally as shown in the previously issued sketch.

The technical specifications are as follows:

1201 1 Chute, Model 39? "L

The unit connects the existing feeding system to the plug screw feeder.

Fabricated parts in contact with sawdust chips and water are made of 316L stainless steel.

Including:
- Two (2) sight glasses
- Nuclear high level switch c/w source & point detector

1202 1 Atmospheric Plug Screw Feeder, Model ADI-420

The unit compresses the sawdust chips to form a tight plug prior to pressurized steaming in the existing M&D digester.

Cast parts in contact with chips and water are made of 316 stainless steel. Fabricated parts in contact with chips and water are made of 316L stainless steel.

Including:
- Compression screw with 1.8:1 ratio

Valmet Inc.
2900 Courtyards Drive, Norcross,Georgia 30071-1554 Telephone: 770-263-7863● Direct Fax: 770-242-3323

valmet
A member of Metso Corporation

- Throat with 6 mmϕ conical drilled drain holes with the majority of the holes blanked-off on the backing side of the throat
- Split throat hood c/w
  - NPT connection for flushing water
  - Flange for filtrate drain connection
  - Two (2) sight glasses
- Plug pipe connection to the tee-pipe assembly
- Hinge base to support the plug screw feeder, gear reducer and motor
- Low speed coupling with guard
- Foot mount gear reducer
- High speed coupling with guard
- Zero speed switch

Excluding:
- Electric motor – 400 HP/1800 RPM/5011LL Frame
- Variable speed drive

1203 **1** **Pressurized Tee-Pipe Assembly, model 36"ϕ**

The unit provides the pressure seal for the existing M&D digester.

The tee-pipe assembly is manufactured in accordance with the ASME code for Unfired Pressure Vessels, Section VIII, Division 1 for an operating pressure of 180 PSIG and so certified.

The tee-pipe assembly is mounted at the discharge of the plug screw feeder. A cone seals against the plug screw feeder plug pipe to ensure a steam-tight plug to minimize the steam loss from the existing M&D digester.

Cast parts in contact with sawdust chips and steam are made of 316 stainless steel.
Fabricated parts in contact with sawdust chips and steam are made of 316L stainless steel.

Including:
- Tee-pipe assembly c/w pneumatic cylinder assembly with PMV positioner with spindle & limit switch
- Flange for vent connection,

valmet
A member of Metso Corporation

1204 1 Atmospheric Rotary Screen, Contra-Shear Milliscreen Model 6/9CI x 0.5 mm

The unit recovers the sawdust chips in the plug screw feeder pressate for feeding back into the system to minimize the yield loss. The plug screw feeder pressate that passes through the screen plate is sent to the sewer for further treatment in the effluent system.

A horizontal rotating drum with 0.5 mm (0.020") wedgewire slots is supported by four (4) grease lubricated long life trunnions. The plug screw feeder pressate is fed into the center and flows over a weir with the suspended solids removed from one end of the screen via diverters mounted to the inside face of the rotating drum. The rotating drum is chain driven by a gearmotor arrangement. The screen plate is cleaned by intermittent showers on both surfaces.

Fabricated parts in contact with chips and water are made of 316 stainless steel.

Particulars of Effluent:	Up to 1% suspended solids
Anticipated Solids Removal:	95% suspended solids > 0.5 mm
	50% suspended solids > 0.25 mm

Including:
- Solids discharge chute
- Pressate inlet flange
- Effluent discharge flange
- Full covers
- Two (2) water showers c/w nozzles
- Foot mount gearmotor ½ HP/1800 RPM
- Chain drive with guard and oiler
- Zero speed switch

We recommend 120 man-hours on-site supervision for checkout and startup services. ($21,000 FOR ONE) (INCL.)

Our Firm Pricing for One (1) plug screw feeder arrangement is: $ 525,100.00 USD

Our Firm Pricing for Two (2) plug screw feeder arrangements is: $ 1,011,200.00 USD (INCL. TWO UNITS)

Unit Take-out Price for Item 1204 atmospheric rotary screen is: $ 19,000.00 USD EA.

valmet
A member of Metso Corporation

Pricing stated above is in US funds, Incoterms 1993 DDP (delivered duty paid), Longview, Washington with all taxes extra. Estimated delivery schedule is 6 – 7 months from order subject to prior sales. Terms and Conditions as previously agreed to for the semi-chemcial order would apply.

The guaranteed fiber loss from the plug screw feeder is < 5% based on the sawdust feed sample, bulk density, moisture content and M&D digester operating pressure ranges that were provided by Longview Fibre. With the installation of the rotary screen the fiber loss guarantee is < 1.0%. The guarantee figures specified above are to be met during the Performance Test run of twenty-four (24) hours based on a plug screw feeder sawdust feed rate of 350 ADST/D. The Performance Test is expected to take place within three (3) months after startup, and must in the absence of same being delayed for reasons beyond the reasonable control of Buyer take place no later than six (6) months after startup unless a later date is mutually agreed to by Buyer and Seller. Any unsuccessful Performance Test may be repeated.

Should the Performance Test be interrupted for any reason not related to the equipment being tested, the Performance Test will be resumed after the interruption has ceased and normal operating conditions have been attained (normally two (2) hours after production is re-started). If the interruption, due to causes outside of Seller's supply, is greater than twelve (12) hours, then the Performance Test will be repeated.

If the performance guarantee has not been met on the basis of the Performance Test, then the Seller, as soon as practical, shall provide technical assistance at the mill to make the necessary recommendations and modifications and shall supply at the mill, at no cost to the Buyer, such parts or components of the equipment supplied by the Seller which are necessary to enable the equipment to meet the performance guarantee contained in this letter. The Seller shall be responsible for all costs to make these changes, including, but not limited to, equipment, material, installation labor, engineering, and freight.

We don't expect the pulp quality from the M&D digester system with a plug screw feeder feeding arrangement will be dramatically changed from the quality currently achieved with the rotary valve feeding the M&D digester system. If we had an inquiry for a new sawdust kraft digester system, our feeding arrangement would include a plug screw feeder instead of the traditional rotary valve type feeder. Unfortunately, we have no current references utilizing a plug screw feeder in this application.

valmet
A member of Metso Corporation

Should you have any questions regarding the contents of this proposal, please do not hesitate to contact the undersigned at 770-263-1593, or Mr. Garth Russell at 770-263-1584 or Anders Mokvist at 770-263-1543. Trusting the above meets with your immediate requirements.

Sincerely,

VALMET, INC.

Bernhard M. Platz

Bernhard M. Platz
Manager, Sales Administration News and Magazine

BMP/2000-041-1p

valmet
A member of Metso Corporation

VIA Email

September 20, 2000

Mr. Scott Dolphin
Longview Fibre Company
PO Box 639
Longview, Washington 98632

Subject: Rotary Valve Replacement
Our Reference # 2000-041/1

Dear Scott:

We are pleased clarify our proposal for replacing your existing rotary valve feeding system to the M&D digester with a plug screw feeder arrangement.

The chute, item 1201, ahead of the plug screw feeder, item 1202, has a vent connection for safety purposes should a blowback occur from the M&D digester. We have at least two TMP customers in North America operating with 1.8:1 ratio plug screw feeder screw in model SFA-420 plug screw feeders. We have a range of plug screw feeder screw ratios operating in TMP & Semi-Chemical applications. With softwood or hardwood chips, we have generally gone to higher compressions such as 2.5:1 to increase the extractive removal efficiency from the plug screw feeder.

The tee-pipe, item 1203, has a vent connection for the intermittent removal of NCG. The rotary screen (item 1204) sizing is based on an average flow of 265 US gpm. All four items along with the recommended on-site supervision are included in the pricing for one or two system(s).

Unit Take-out Price for 120 man-hours on-site supervision is: $ 21,000.00 USD

We are currently awaiting dimension drawing information from Contra-Shear for the unit quoted. We will forward this as soon as received.

The Fort William division of Abitibi-Consolidated Inc.'s facility located in Thunder Bay, Ontario has always operated on softwood chips for their SCMP M&D digester system. Since the installation is approximately 20 years old, our sales records are non-existent, and our memory was a bit off since we thought that at one point they operated with sawdust chips. We apologize for any inconvenience caused by our error. Unfortunately, we therefore have no current reference utilizing a plug screw feeder in this application.

Valmet Inc.
2900 Courtyards Drive, Norcross,Georgia 30071-1554 Telephone: 770-263-7863 Direct Fax: 770-242-3323

valmet
A member of Metso Corporation

Should you have any questions regarding the contents of this proposal, please do not hesitate to contact the undersigned at 770-263-1593, or Mr. Garth Russell at 770-263-1584 or Anders Mokvist at 770-263-1543. Trusting the above meets with your immediate requirements.

Sincerely,

VALMET, INC.

Bernhard M. Platz

Bernhard M. Platz
Manager, Sales Administration News and Magazine

BMP/00020

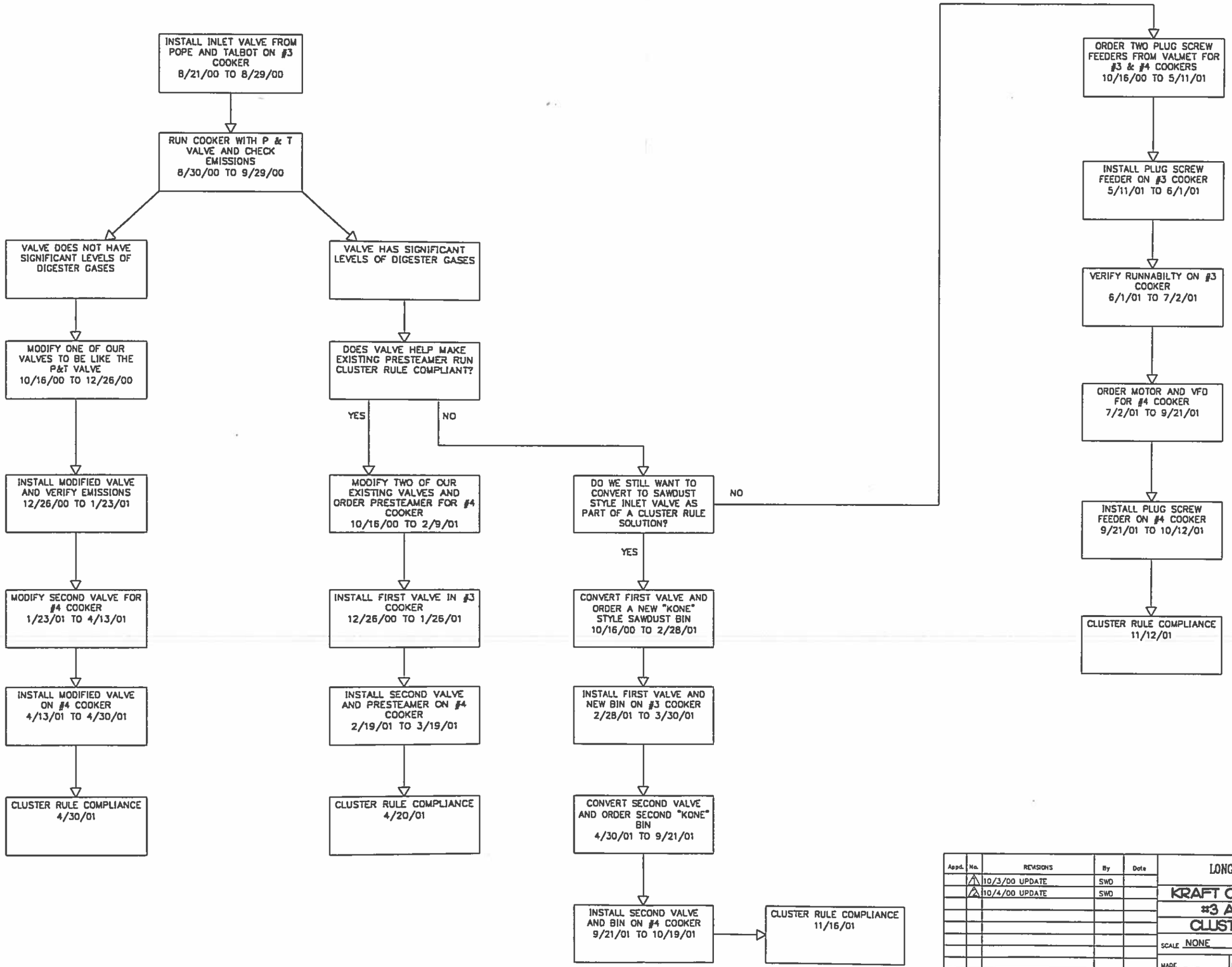

COPIES ISSUED

APPROVED
By _____ Date _____
By _____ Date _____

W.O. No.	Charge

Appd.	No.	REVISIONS	By	Date
	1	10/3/00 UPDATE	SWD	
	2	10/4/00 UPDATE	SWD	

LONGVIEW FIBRE COMPANY
LONGVIEW, WASHINGTON

KRAFT CONTINUOUS PULPING
#3 AND #4 COOKERS
CLUSTER RULE TIMELINE

SCALE NONE DATE 8/11/00

MADE BY SWD EQUIPT. NO. 0600-00 DWG. NO.

(b) (4)

(b) (4)

Section I - Fed EPA - Air Corresp (1)

LONGVIEW FIBRE COMPANY

MAIN OFFICE AND MILLS • LONGVIEW, WASHINGTON 98632
1-360-425-1550

November 15, 2000

Mr. Kai Hon Shum
Environmental Engineer
United States Environmental Protection Agency
Region 10
1200 Sixth Avenue, OAQ-107
Seattle, WA 98101

Dear Mr. Kai Hon Shum:

This letter constitutes the second monthly report to you concerning our progress towards compliance with 40 CFR Part 63, Subpart S, National Emission Standards for Hazardous Air Pollutants applicable to the Pulp and Paper Industry, at our M&D, continuous kraft sawdust digesters, as stipulated in the letter dated August 31, 2000 from Mr. Douglas E. Hardesty to Mr. Thomas E. Vaught.

As explained to you during your August 8, 2000 visit to our mill, we are working on multiple alternatives, as listed in last month's letter, and restated below:

> Alternative #1. Borrow a different style rotary pocket feeder valve from the Pope and Talbot pulp and paper mill and run a trial with that valve to see if the currently installed inoperable controls could be made to work. If successful, we would convert our valves to that configuration and proceed with the installation at #3 and #4 M&D continuous kraft digesters. Another option of this alternative is to replace the entire existing wood bin system with a new one mounted directly above the currently installed system so that the entire contents of the bin could be used to condense vapors instead of the small volume of wood that passes through the condensing screw system. A third option was that the sawdust style valve could be operated in a manner that the pocket purge vapors would be essentially 100% fresh steam and would not require controls. This was shown on the timeline diagram attached to last month's report.
>
> Alternative #2. Design an entirely new system around a plug screw feeder system offered by a different supplier. This would involve "throwing away" the inoperable system and starting all over again with the design and installation of the new system.

Alternative #1 Progress:

Our testing of the HAPs content at #3 M&D showed that the content was variable and further testing was required to determine what operating mode reduces the HAPs to a negligible level. That testing, which indicated that proper operation made the pocket purge flow essentially 100% fresh steam at #3 M&D, led us to ask Pope & Talbot if we could continue to use the valve so it could be installed at #4 M&D for further HAPs testing. Operational problems remain at #3 M&D with the current condensing screw system. It still is not able to operate at normal capacity. It is difficult to start and loses the wood "plug" often which causes serious blow backs of sawdust and pulping vapors. These are unacceptable operating conditions which, as of this report, force us to abandon this system.

Pope and Talbot agreed to allow us to keep the valve for installation and testing at #4 M&D. The #4 M&D continuous kraft sawdust digester had not been modified in any way up to this point. Installation at #4 M&D would allow us to determine if simply installing the sawdust style valve and making appropriate operational modifications would allow this system to be exempt from the provisions of 40 CFR Part 63, Subpart S. It is not EPA's intent to require collection and treatment of vapors that are fresh steam. A number of other kraft mills have reported that this is what they are doing. Attached is an excerpt from an email to Mr. Bill Dameworth of the Pope and Talbot Mill from Ms. Penny Lassiter, EPA.

This concept was also established by EPA staff in a verbal response to a similar question on June 8, 1998 meeting with AF&PA. "*Unless flash steam is directly introduced into the chip bin, the vent gases from the chip bin do not have to be collected.*" (Supplementary Information on the Cluster Rule, Version 2.0, 02/05/99, NCASI)

Furthermore, the EPA March 31, 2000 Questions and Answers document states on page 5 "*If you are using fresh steam in the chip steaming vessel, then you do not have to control emissions from your chip bin*".

We believe that use of the new style sawdust valve places us in a similar situation in that only fresh steam is applied to the rotary pocket inlet valve and emissions from the pocket purge system are fresh steam. The old style valve was incapable of efficient pocket purging and, as a result, did trap and emit process vapors. The new valve does not trap process vapors.

#3 M&D was shut down on about October 11th, 2000 and the borrowed valve was removed from #3 M&D and installed on #4 M&D by October 17th, 2000. HAPs testing began on October 23, 2000. The results indicated that the system could be operated so that the pocket purge flow to the atmospheric cyclone was 100% fresh steam. Our testing continued as we operated the borrowed valve long enough to establish the operating procedures required to maintain a pocket purge flow of only fresh steam. We believe that use of this style valve with modification of the operating procedures will allow the M&D continuous Kraft sawdust digesters to be exempt from all provisions of the 40 CFR Part 63, Subpart S. We ask for your prompt consideration of this information and request a determination that the pocket purge flow is exempt as a fresh steam emission. We await your response before proceeding to converting our valves to this new style. Conversion of our valves to the new sawdust configuration is estimated to require 2 to 4 months. **This alternative, if approved by EPA, will allow at least one of the M&D continuous Kraft digesters to be operational by the original April 16th, 2001 deadline.** We would not operate the second, or third, M&D continuous Kraft digesters until they had the new style valves installed. The second M&D continuous Kraft digester would be modified and made operational as soon as possible after completing the first one. The decision as to whether or not to modify the third M&D continuous Kraft digester would be an economic decision and would be made based upon market conditions, probably at some later date. It would remain down and deemed inoperable until a new style valve was installed.

Alternative #2 Progress:

This option involves designing a new feed system and ordering a device called a "plug screw feeder". We know that plug screw feeders work well on chips but were concerned about how well it would work on sawdust. The main concern was how much sawdust is lost through the plug screw feeder screen, the tube that the plug is formed in. This sawdust would have to be recovered and re-introduced into the wood feed system. Initial indications are that the sawdust losses are about 5% but recovery and re-introduction is viable. Another issue is pulp quality. It is a known fact that plug screw feeders damage the wood which reduces pulp strength. This alternative investigation cannot proceed any further at this time until all the options of alternative #1 are explored completely.

As stated earlier, installation of the new style valve have changed emissions to the point that the system will be exempt, and thus, in compliance. We eagerly await your review or our progress and a determination that collection and treatment of fresh steam is not required.

Please contact me for any questions you may have concerning this progress report.

Sincerely,

Steven D. DuVall
Senior Air Quality Engineer
Longview Fibre Company

CC: TEV/JHS/RJP,RBP,FSB,ADW,RJD,SWD,PWO,File
Marc Heffner, Department of Ecology

LASSITER.PENNY@epamail.epa.gov

04/21/1998 11:42 AM

To: Bill Dameworth/POPTAL
cc:
Subject: Re: Cluster Rules -Reply

To: Bill Dameworth, Pope and Talbot - Halsey, OR

I apologize for not responding to your E-Mail. As you can imagine, I am getting many questions from all over the industry and States. My problem is that I am getting similar related questions set in a specific mill context. We are working to compile the questions and responses to put into a guidance document. I am reluctant to tell one mill something at this point for fear of telling another mill something different.

Your question on the chip steamer has been a very "popular" question in the industry. Unfortunately, the question has been posed differently every time I've heard it. I have had some communication with Rob Kaufmann of AF&PA. I have requested some diagrams and some writeups to help me understand the problem. I understand that AF&PA is putting something together, but I have not received anything to date. The questions I have received thus far have related to Impco and Kamyr continuous digesters. I'm not familiar with the M&D digester so I don't know how it compares to these two. The intent of the rule is to control venting off the chip steamers and venting off of the chip bin if the chip steamer vents through the chip bin where waste or flash steam is used. As I recall, we did not intend to capture situations where only fresh steam is used.

Section 1 - CTA - Air Correspondence 1

LONGVIEW FIBRE COMPANY

MAIN OFFICE AND MILLS • LONGVIEW, WASHINGTON 98632
1-360-425-1550

December 12, 2000

Mr. Kai Hon Shum
Environmental Engineer
United States Environmental protection Agency
Region 10
1200 Sixth Avenue, OAQ-107
Seattle, WA 98101

Dear Mr. Kai Hon Shum:

This letter constitutes the third monthly update report on Longview Fibre Company's progress towards bringing the M&D continuous kraft sawdust digesters into compliance with the provisions of 40 CFR Part 63, Subpart S, National Emission Standards for Hazardous Air Pollutants applicable to the Pulp and Paper Industry, as required by the compliance extension granted in a letter dated August 31, 2000 from Mr. Douglas E. Hardesty to Mr. Thomas E. Vaught.

During a phone conversation with me on November 20th, you discussed an email I sent you November 17th concerning the results of operating the borrowed "sawdust" rotary pocket inlet feeder valve at our M&D continuous kraft sawdust cookers. That email was essentially a very brief summary of the monthly progress report that I had mailed to you on November 15th.

In the email I related to you that the valve we borrowed was able to run with the pocket purge flow essentially 100% fresh steam. The monthly progress report covered the topic in much more detail. During the course of the discussion you asked how we had determined that the flow was essentially 100% fresh steam and asked us to submit the data upon which we based that finding. The data summary is attached to this letter.

Our determination of what constitutes "essentially 100% fresh steam" begins with interpreting 40 CFR Part 63, Subpart S; specifically § 63.443 (d) (2) which describes allowable emissions from the discharge of a thermal oxidizer as 20 parts per million or less by volume, corrected to 10% oxygen on a dry basis. This is for a control device used to reduce the total HAP concentration from a LVHC source.

Our old valves did not efficiently purge the digester vapors from the rotary pocket inlet feeder valve which resulted in significant HAP emissions to the atmosphere through the existing pocket purge cyclone. The new valve does efficiently purge digester vapors from the pockets so that the purge flow to the cyclone is very clean, essentially 100%

fresh steam. This was determined by capturing samples of the pocket purge flow to the cyclone using the NCASI chilled midget impinger sampling train. Analysis of the samples was performed on a GC-FID. Liquid concentrations in the impinger catch were used to calculate purge flow HAP parts per million on a dry volumetric basis. The results of 17 runs at #4 M&D continuous kraft sawdust cooker was an average of 8 parts per million HAP at stack conditions. Unfortunately, we did not collect oxygen information so we will assume, for now, that the oxygen was 20.9%. Although oxygen corrections are not normally done for non-combustion sources, the correction formula is as follows:

$$\frac{8\,parts}{per\ million} \times \frac{(20.9)}{(20.9-10)} = \frac{15.3\,parts}{per\ \text{million}} \text{ dry volumetric, corrected to 10\% oxygen}$$

Even under this worst case analysis, the pocket purge flow to the cyclone would meet our "benchmark", the criteria established for thermal oxidation control, i.e., total HAP's less than 20 ppm, volumetric, corrected to 10% oxygen on a dry basis.

It is important to note that we establish and maintain this very low HAP concentration by actually establishing a flow of M&D continuous kraft sawdust digester vapors from the top of the digester body to the blow tank system which is connected to our mill closed vent collection system for all LVHC sources for incineration at either a lime kiln or a power boiler where the vapors are introduced into the flame zone (§63.443 (d) (4)).

The actual HAP control is the change in the process where we establish the flow of digester process vapors to the blow tank and into the closed vent collection system for treatment. The installation of the new valve allows an efficient pocket purge with fresh steam and leads to the conclusion that the pocket purge flow is an exempt stream since it was not EPA's intent to collect fresh steam streams. Information supporting this view of EPA's intent was related in the November 15th progress report letter.

As of the date this letter was written, Longview Fibre Company management has decided to proceed with the purchase/modification of two new style sawdust valves for installation as soon as possible at our M&D continuous kraft sawdust digesters because we believe it is the correct thing to do. Estimated time of delivery for the first two valves is approximately 14 weeks after placing the order. It is this long lead time that made us decide during our "Cluster Rule" projects meeting that we could not delay placing an order. I estimate that these two valves will arrive on or about the middle of March, 2001. An additional valve will be ordered at a later time for a spare. #4 M&D will receive the first valve as soon as it arrives since that digester can be made operational and in compliance by simply installing the valve and operating the digester with a purge flow from the digester body to the blow tank as described above. We expect that this course of action will allow us to be in compliance at #4 M&D continuous kraft sawdust digester by April 16th, 2001. Unforeseen delays could occur but we would still be operating under

the current extension and would keep you informed of our progress through our monthly reports. The #3 M&D continuous kraft sawdust digester will require more engineering and equipment since some of the previous conveying systems were eliminated during the initial attempt to install controls. The cooker is inoperable at this time and will remain inoperable until the engineering is complete and the new conveyor and valve are installed making it operational and compliant in the same manner as #4 M&D continuous kraft sawdust cooker. We would inform you as to when the project was complete and in full compliance.

As stated above, Longview Fibre Company is proceeding with this plan because it will provide the most cost effective, timely means of insuring compliance and the availability of the sawdust pulp grades which are necessary to our product mix.

Please contact me for any questions you may have concerning this report, the attached data, or additional information that you may require.

Sincerely,

Steven D. DuVall

Steven D. DuVall
Senior Air Quality Engineer

Attachments

CC: TEV/JHS/RJP,RBP,FSB,ADW,RJD,SWD,PWO,File
Marc Heffner, Department of Ecology

HAPS TESTING AT #4 M&D

DATE	START	STOP	HAP's PPM
10/24/2000	8:45	9:45	1.4
	10:15	11:15	11
	12:45	1:45	4.4
10/27/2000	8:25	9:25	16.2
	10:20	11:20	17.5
	12:45	1:45	11.6
10/30/2000	8:15	9:15	15.7
	1:50	2:50	8.7
10/312000	8:10	9:10	4.7
	10:05	11:05	3.5
	12:45	1:40	6.3
11/1/2000	9:55	10:55	8.5
	11:05	12:05	7.6
	1:00	1:40	4.7
	1:50	2:30	1.8
	9:20	10:20	8.4
	12:35	1:15	3.8

AVG.	8.0	20.9% OXYGEN (ASSUMED)
	15.3	CORRECTED TO 10% OXYGEN

file - Sect. I - EPA - Air - Correspondence

Fi6

LONGVIEW FIBRE COMPANY

MAIN OFFICE AND MILLS • LONGVIEW, WASHINGTON 98632
1-360-425-1550

February 15, 2001

Mr. Kai Hon Shum
Environmental Engineer
United States Environmental protection Agency
Region 10
1200 Sixth Avenue, OAQ-107
Seattle, WA 98101

Dear Mr. Kai Hon Shum:

This letter constitutes the fifth monthly update report on Longview Fibre Company's progress towards bringing the M&D continuous kraft sawdust digesters into compliance with the provisions of 40 CFR Part 63, Subpart S, National Emission Standards for Hazardous Air Pollutants applicable to the Pulp and Paper Industry, as required by the compliance extension granted in a letter dated August 31, 2000 from Mr. Douglas E. Hardesty to Mr. Thomas E. Vaught.

We are still proceeding with our plans to install model 77, sawdust pocket feeder rotary inlet valves on our #3 and #4 M&D continuous kraft sawdust digesters.

The first valve, destined to be installed at #4 M&D continuous kraft sawdust digester, is still expected March 15, 2001. Installation is expected to proceed as soon as the valve is received. All engineering is complete. Startup is still anticipated by the end of March, 2001.

The delivery date for the second valve, which will be installed at #3 M&D continuous kraft sawdust digester, has slipped a few weeks with delivery now expected about May 15, 2001. Installation will proceed as soon as possible after the converted valve is received. The engineering for the #3 M&D continuous kraft sawdust digester is in progress. The main conveyor has been specified and is now out for quotes. We expect the engineering to be completed within a few weeks. The #3 M&D continuous kraft sawdust digester required more engineering and equipment since some of the previous conveying systems were eliminated during the initial attempt to install controls. The cooker is inoperable at this time and will remain inoperable until the engineering is complete and the new conveyor and a valve are installed making it operational. It is our intent at this time to not operate the #3 M&D continuous kraft sawdust digester until the model 77 style valve is received. I will apprise you of any changes if the situation arises.

We have received cost estimates for the third model 77 style valve and are still in the process of approving funding to proceed with its purchase. We are also reviewing our previous decisions concerning the #5 M&D continuous kraft sawdust digester. As stated in the past, we currently plan to shutdown the #5 M&D continuous kraft sawdust digester by the April 16, 2001 compliance date and had stated that we would not operate #5 M&D continuous kraft sawdust digester until it is made compliant. The enormous costs associated with the condensing screw conveyor control plan forced us to only plan for #3 and #4 M&D continuous kraft sawdust digesters initially. We had a project written for the #5 M&D continuous kraft sawdust digester but it was placed on "hold". The cost concerns are reduced with the current plan and it is now possible that we could make #5 M&D continuous kraft sawdust digester compliant within the existing compliance extension.

As stated above, Longview Fibre Company is proceeding with this plan because it will provide the most cost effective, timely means of insuring compliance and the availability of the sawdust pulp grades which are necessary to our product mix.

Please contact me for any questions you may have concerning this report or additional information that you may require.

Sincerely,

Steven D. DuVall
Senior Air Quality Engineer

Attachments

CC: TEV/JHS/RJP,RBP,FSB,ADW,RJD,SWD,PWO,File
Marc Heffner, Department of Ecology

Fig

LONGVIEW FIBRE COMPANY

MAIN OFFICE AND MILLS • LONGVIEW, WASHINGTON 98632
1-360-425-1550

March 14, 2001

Mr. Kai Hon Shum
Environmental Engineer
United States Environmental protection Agency
Region 10
1200 Sixth Avenue, OAQ-107
Seattle, WA 98101

Dear Mr. Kai Hon Shum:

This letter constitutes the sixth monthly update report on Longview Fibre Company's progress towards bringing the M&D continuous kraft sawdust digesters into compliance with the provisions of 40 CFR Part 63, Subpart S, National Emission Standards for Hazardous Air Pollutants applicable to the Pulp and Paper Industry, as required by the compliance extension granted in a letter dated August 31, 2000 from Mr. Douglas E. Hardesty to Mr. Thomas E. Vaught.

We are still proceeding with our plans to install model 77, sawdust pocket feeder rotary inlet valves on our #3 and #4 M&D continuous kraft sawdust digesters.

The first valve, destined to be installed at #4 M&D continuous kraft sawdust digester, is still expected March 15, 2001. Installation is expected to proceed as soon as the valve is received. All engineering is complete. Startup is still anticipated by the end of March, 2001.

The delivery date for the second valve, which would have been installed at #3 M&D continuous kraft sawdust digester, has changed dramatically with delivery now expected about the end of June, 2001. We had sent a valve to Andritz for conversion but they do not believe it can be salvaged due to the condition of the housing. Because of this , we have sent another of our current, old style valves to Tri-Star for conversion. We switched to Tri-Star because they quoted a quicker delivery. The delivery date is about 12 weeks away, thus the late June arrival. Installation will proceed as soon as possible after this converted valve is received. The engineering for the #3 M&D continuous kraft sawdust digester is essentially complete. The main conveyor has been ordered with delivery expected in about six weeks. The #3 M&D continuous kraft sawdust digester required more engineering and equipment since some of the previous conveying systems were eliminated during the initial attempt to install controls. The cooker is inoperable at this time and will remain inoperable until the new conveyor arrives and is installed. We had previously felt that the start up time would be reasonably close to the startup of #4 M&D

continuous kraft sawdust digester and that we would not need to operate #3 M&D continuous kraft sawdust digester until the new valve was installed. We are now concerned that the 2-3 month delay would leave us with only #4 M&D continuous kraft sawdust digester operational after April 16, 2001. It is our intent at this time to install the new conveyor at the #3 M&D continuous kraft sawdust digester as soon as it arrives and make it a "run-able" spare until the model 77 style valve is received. We would only operate the #3 M&D continuous kraft sawdust digester after April 16th if the modified #4 M&D continuous kraft sawdust digester were to fail catastrophically. We will continue with our plan to make #3 M&D continuous kraft sawdust digester compliant as speedily as possible, well within the extension period.

We have received cost estimates for the third model 77 style valve and are still in the process of approving funding to proceed with its purchase. It will likely be a new valve, ordered from Andritz. We are still reviewing our previous decisions concerning the #5 M&D continuous kraft sawdust digester. As of this letter, we still plan to shut it down and leave it down after April 16, 2001.

As stated above, Longview Fibre Company is proceeding with this plan because it will provide the most cost effective, timely means of insuring compliance and the availability of the sawdust pulp grades which are necessary to our product mix.

Please contact me for any questions you may have concerning this report or additional information that you may require.

Sincerely,

Steven D. DuVall

Steven D. DuVall
Senior Air Quality Engineer

Attachments

CC: TEV/JHS/RJP,RBP,FSB,ADW,RJD,SWD,PWO,File
Marc Heffner, Department of Ecology

Section 1 – [illegible] correspondence ① file

LONGVIEW FIBRE COMPANY

MAIN OFFICE AND MILLS • LONGVIEW, WASHINGTON 98632
1-360-425-1550

April 11, 2001

Mr. Kai Hon Shum
Environmental Engineer
United States Environmental protection Agency
Region 10
1200 Sixth Avenue, OAQ-107
Seattle, WA 98101

Dear Mr. Kai Hon Shum:

This letter constitutes the seventh monthly update report on Longview Fibre Company's progress towards bringing the M&D continuous kraft sawdust digesters into compliance with the provisions of 40 CFR Part 63, Subpart S, National Emission Standards for Hazardous Air Pollutants applicable to the Pulp and Paper Industry, as required by the compliance extension granted in a letter dated August 31, 2000 from Mr. Douglas E. Hardesty to Mr. Thomas E. Vaught.

We are still proceeding with our plans to install model 77, sawdust pocket feeder rotary inlet valves on our #3 and #4 M&D continuous kraft sawdust digesters.

The first valve, destined to be installed at #4 M&D continuous kraft sawdust digester, arrived, as expected, on March 15, 2001. Installation of the valve began on Monday, March 19, 2001. The installation took longer than anticipated because we had to reconfigure several piping connections and completely replace the end bell relief steam connections. This work was completed late in the month, just prior to a mill production curtailment shutdown. The production curtailment shutdown started on April 2, 2001. The mill began starting up again on April 9, 2001. We began the startup process on #4 M&D continuous kraft sawdust digester as of April 10, 2001. HAP's emission testing is expected to begin today, April 11th, and will be reported in next month's progress report.

The delivery date for the valve for #3 M&D continuous kraft sawdust digester is still estimated at a late June arrival. Installation will proceed as soon as possible after this converted valve is received. The engineering for the #3 M&D continuous kraft sawdust digester is complete. We have removed the condensing screw and are in the process of completing the piping demolition associated with its removal. The main conveyor has been ordered with delivery expected in about two more weeks, near the end of April. The cooker is inoperable at this time and will remain inoperable until the new conveyor arrives and is installed and all necessary piping reconfigurations are complete. We had previously felt that the start up time would be reasonably close to the startup of #4 M&D

continuous kraft sawdust digester and that we would not need to operate #3 M&D continuous kraft sawdust digester until the new valve was installed. We are still concerned that the 2-3 month delay would leave us with only #4 M&D continuous kraft sawdust digester operational after April 16, 2001. It is still our intent at this time to install the new conveyor at the #3 M&D continuous kraft sawdust digester as soon as it arrives and make it a "run-able" spare until the model 77 style valve is received. We would only operate the #3 M&D continuous kraft sawdust digester after April 16th if the modified #4 M&D continuous kraft sawdust digester were to fail catastrophically. We will continue with our plan to make #3 M&D continuous kraft sawdust digester compliant as speedily as possible, well within the extension period.

We have approved the cost estimates for the third model 77 style valve to be a spare, and are proceeding with its purchase. We are still reviewing our previous decisions concerning the #5 M&D continuous kraft sawdust digester. As of this letter, we still plan to shut it down and leave it down after April 16, 2001.

As stated above, Longview Fibre Company is proceeding with this plan because it will provide the most cost effective, timely means of insuring compliance and the availability of the sawdust pulp grades which are necessary to our product mix.

Please contact me for any questions you may have concerning this report or additional information that you may require.

Sincerely,

Steven D. DuVall
Senior Air Quality Engineer

Attachments

CC: TEV/JHS/RJP,RBP,FSB,ADW,RJD,SWD,PWO,File
Marc Heffner, Department of Ecology

(AUW) file

LONGVIEW FIBRE COMPANY

MAIN OFFICE AND MILLS • LONGVIEW, WASHINGTON 98632
1-360-425-1550

May 15, 2001

Mr. Marc Heffner
Industrial Section
Department of Ecology
P. O. Box 47706
Olympia, WA 98504-7706

Dear Mr. Heffner:

This letter constitutes the eighth monthly update report on Longview Fibre Company's progress towards bringing the M&D continuous kraft sawdust digesters into compliance with the provisions of 40 CFR Part 63, Subpart S, National Emission Standards for Hazardous Air Pollutants applicable to the Pulp and Paper Industry, as required by the compliance extension granted in a letter dated August 31, 2000 from the Environmental Protection Agency's Mr. Douglas E. Hardesty to Longview Fibre Company's Mr. Thomas E. Vaught. This letter is now being addressed to Ecology since the issuance of our Air Operating Permit WA 000007-8, dated April 12, 2001. A copy of this letter will also be sent to the Environmental Protection Agency's Mr. Kai Hon Shum.

As reported last month, we have successfully installed a model 77 valve at #4 M&D continuous kraft sawdust digester which began the start-up process on April 10, 2001. We had a normal start-up and began HAP's testing on the rotary inlet valve pocket purge cyclone vent on the following day, April 11, 2001. Sampling took place over a three day period ending April 13, 2001. The pocket purge is now essentially fresh steam, and as such, was never intended to be regulated.

Our old valves did not efficiently purge the digester vapors from the rotary pocket inlet feeder valve which resulted in significant HAP emissions to the atmosphere through the existing pocket purge cyclone. The new valve does efficiently purge digester vapors from the pockets so that the purge flow to the cyclone is very clean, essentially 100% fresh steam. It is important to note that we establish and maintain this by actually establishing a flow of M&D continuous kraft sawdust digester vapors from the top of the digester body to the blow tank system which is connected to our mill closed vent collection system for all LVHC sources.

HAPs testing during the three day period confirmed results of previous testing with the valve borrowed from Pope & Talbot as can be seen on the data summary attached to this letter. This was determined by capturing samples of the pocket purge flow to the cyclone using the NCASI chilled midget impinger sampling train. Analysis of the samples was

performed on a GC-FID. Liquid concentrations in the impinger catch were used to calculate purge flow HAP parts per million on a dry volumetric basis. The results of 17 runs at #4 M&D continuous kraft sawdust cooker while operating the borrowed valve was an average of 8 parts per million HAP at stack conditions. Initial testing on April 11, 2001 had the first two runs at about 14 ppm. The results from the next 9 runs averaged 8 ppm.

We believe that #4 M&D continuous kraft sawdust digester is now compliant with all of the provisions of Subpart S and are proceeding with plans to install a model 77 valve on our #3 M&D continuous kraft sawdust digester. We do not expect delivery of the valve until the end of June, 2001. In the meantime, we are installing the new conveyor at #3 M&D continuous kraft sawdust digester to replace the equipment that we removed to allow installation of the unsuccessful condensing screw, pre-steamer system. We intend to make #3 M&D continuous kraft sawdust digester an emergency back-up to #4 M&D continuous kraft sawdust digester. #3 M&D continuous kraft sawdust digester will only be used in the event of a catastrophic failure of the #4 M&D continuous kraft sawdust digester.

A third valve has been ordered as a spare although delivery is not expected until late summer. I will keep you apprised of that delivery date as better information becomes available.

Longview Fibre Company is proceeding with this plan because it will provide the most cost effective, timely means of insuring compliance and the availability of the sawdust pulp grades which are necessary to our product mix.

Please contact me for any questions you may have concerning this report, the attached data, or additional information that you may require.

Sincerely,

Steven D. DuVall

Steven D. DuVall
Senior Air Quality Engineer

Attachments

CC: TEV/JHS/RJP,RBP,FSB,ADW,RJD,SWD,PWO,File
Mr. Kai Hon Shum, EPA Region 10

SUBJ: Results of Initial HAPs Testing at #4 M&D with New Model 77 Valve

We have the Model 77 valve installed at #4 M&D and have tested the pocket purge cyclone vent for HAPs emissions. This rebuilt valve performed every bit as good as the valve we borrowed from Pope & Talbot. Testing was done over a three-day period April 11-13, 2001. A total of 12 sample runs were performed. The first two runs yielded the highest HAPs results with an average of about 14 ppm total. I have "thrown out" the results for run #10 because it yielded anomalous results near zero. The average of the last nine runs was about 8ppm total HAPs.

#4 M&D Model 77 Valve Pocket Purge Cyclone Vent HAPs Summary

Date	Run #	Methanol	Acetaldehyde	Propanal	MEK	Total PPM
4/11	1	10.9	1.85	0.91	0.26	13.92
	2	10.66	1.28	1.62	0.32	13.88
	3	6.63	0.93	1.39	0.16	9.11
	4	5.61	1.36	1.48	0.19	8.64
4/12	5	4.98	1.01	0.97	0.25	7.21
	6	6.59	1.65	0.20	1.45	9.89
	7	3.72	0.87	0.75	0.14	5.48
	8	4.88	0.76	0.74	0.16	6.54
4/13	9	4.55	1.02	10.32	0.25	16.14
	11	3.13	1.24	0.75	0.21	5.33
	12	3.85	1.16	1.09	0.02	6.12
Avg. #3-#12		4.88	1.11	1.97	0.31	8.27

LONGVIEW FIBRE COMPANY

MAIN OFFICE AND MILLS • LONGVIEW, WASHINGTON 98632
1-360-425-1550

June 14, 2001

Mr. Marc Heffner
Industrial Section
Department of Ecology
P. O. Box 47706
Olympia, WA 98504-7706

Dear Mr. Heffner:

This letter constitutes the ninth monthly update report on Longview Fibre Company's progress towards bringing the M&D continuous kraft sawdust digesters into compliance with the provisions of 40 CFR Part 63, Subpart S, National Emission Standards for Hazardous Air Pollutants applicable to the Pulp and Paper Industry, as required by the compliance extension granted in a letter dated August 31, 2000 from the Environmental Protection Agency's Mr. Douglas E. Hardesty to Longview Fibre Company's Mr. Thomas E. Vaught. This letter is now being addressed to Ecology since the issuance of our Air Operating Permit WA 000007-8, dated April 12, 2001. A copy of this letter will also be sent to the Environmental Protection Agency's Mr. Kai Hon Shum.

As stated last month, we believe that #4 M&D continuous kraft sawdust digester is now compliant with all of the provisions of Subpart S and are still proceeding with plans to install a model 77 valve on our #3 M&D continuous kraft sawdust digester. We still expect delivery of the valve at the end of June, 2001. We have installed the new conveyor at #3 M&D continuous kraft sawdust digester to replace the equipment that was removed to allow installation of the unsuccessful condensing screw, pre-steamer system. We intend to make #3 M&D continuous kraft sawdust digester an emergency back-up to #4 M&D continuous kraft sawdust digester. #3 M&D continuous kraft sawdust digester will only be used in the event of a catastrophic failure of the #4 M&D continuous kraft sawdust digester.

A third valve has been ordered as a spare although delivery is not now expected until about January, 2002.

Longview Fibre Company is proceeding with this plan because it will provide the most cost effective, timely means of insuring compliance and the availability of the sawdust pulp grades which are necessary to our product mix.

Please contact me for any questions you may have concerning this report or additional information that you may require.

Sincerely,

Steven D. DuVall
Senior Air Quality Engineer

Attachments

CC: TEV/JHS/RJP,RBP,FSB,ADW,RJD,SWD,PWO,File
Mr. Kai Hon Shum, EPA Region 10

LONGVIEW FIBRE COMPANY

MAIN OFFICE AND MILLS • LONGVIEW, WASHINGTON 98632
1-360-425-1550

July 12, 2001

Mr. Marc Heffner
Industrial Section
Department of Ecology
P. O. Box 47706
Olympia, WA 98504-7706

Dear Mr. Heffner:

This letter constitutes the tenth monthly update report on Longview Fibre Company's progress towards bringing the M&D continuous kraft sawdust digesters into compliance with the provisions of 40 CFR Part 63, Subpart S, National Emission Standards for Hazardous Air Pollutants applicable to the Pulp and Paper Industry, as required by the compliance extension granted in a letter dated August 31, 2000 from the Environmental Protection Agency's Mr. Douglas E. Hardesty to Longview Fibre Company's Mr. Thomas E. Vaught. This letter is now being addressed to Ecology since the issuance of our Air Operating Permit WA 000007-8, dated April 12, 2001. A copy of this letter will also be sent to the Environmental Protection Agency's Mr. Kai Hon Shum.

#4 M&D continuous kraft sawdust digester is now compliant with all of the provisions of Subpart S. It is operated in a manner consistent with operation during the test period to insure that only fresh steam is purged from the pocket feeder system.

We are proceeding with plans to install a model 77 valve on our #3 M&D continuous kraft sawdust digester. We received word from our supplier, Tri Star, that the valve for #3 M&D continuous kraft sawdust digester was to be shipped out to us by July 2, 2001 with delivery expected soon thereafter. The cooker was made ready for the new valve installation during the production curtailment that took place on July 3rd and 4th, 2001. Mechanical crews are proceeding with the necessary work including piping changes and expect completion of that work by the about July 20th, 2001. It will not operate until all changes are completed making it compliant with all provisions of Subpart S.

We did use #3 M&D continuous kraft sawdust digester an emergency back-up to #4 M&D continuous kraft sawdust digester for a brief period starting June 25th through June 26th, 2001. It only ran about 13 hours total, just long enough to troubleshoot some minor problems and insure it would be a usable emergency backup in the event of a catastrophic failure of the #4 M&D continuous kraft sawdust digester.

There has been no change in the status of the third valve which has been ordered as a spare. Delivery is still not expected until about January, 2002.

The successful installation and operation of the Model 77 valve at #3 M&D continuous kraft sawdust digester will conclude our compliance extension installations. We have no plans to modify #5 M&D continuous kraft sawdust digester at this time and it will remain down. It will not be operated unless it is also modified to be compliant with all the provisions of Subpart S. We will notify you in writing of any change in the status of #5 M&D continuous kraft sawdust digester system.

Please contact me for any questions you may have concerning this report or additional information that you may require.

Sincerely,

Steven D. DuVall
Senior Air Quality Engineer

Attachments

CC: TEV/JHS/RJP,RBP,FSB,ADW,RJD,SWD,PWO,File
Mr. Kai Hon Shum, EPA Region 10

LONGVIEW FIBRE COMPANY

MAIN OFFICE AND MILLS • LONGVIEW, WASHINGTON 98632
1-360-425-1550

August 13, 2001

Mr. Marc Heffner
Industrial Section
Department of Ecology
P. O. Box 47706
Olympia, WA 98504

Dear Mr. Heffner:

This letter constitutes the eleventh and final monthly update report on Longview Fibre Company's progress towards bringing the M&D continuous kraft sawdust digesters into compliance with the provisions of 40 CFR Part 63, Subpart S, National Emission Standards for Hazardous Air Pollutants applicable to the Pulp and Paper Industry, as required by the compliance extension granted in a letter dated August 31, 2000 from the Environmental Protection Agency's Mr. Douglas E. Hardesty to Longview Fibre Company's Mr. Thomas E. Vaught. This letter is now being addressed to Ecology since the issuance of our Air Operating Permit WA 000007-8, dated April 12, 2001. A copy of this letter will also be sent to the Environmental Protection Agency's Mr. Kai Hon Shum.

We are pleased to report that #3 M&D continuous kraft sawdust digester has its new style, Model 77 rotary inlet pocket feeder valve installed. It also has the digester body vapor space vent line and flow control valve to the #6 blow tank installed. Spot testing for hazardous air pollutants (HAPs) in the pocket feeder purge cyclone confirms proper operation. Emissions testing results were very similar to previous testing at #4 M&D continuous kraft sawdust digester with an average of about 8 ppm total HAPs.

With the completion of this installation, both #3 and #4 M&D continuous kraft sawdust digesters are now compliant with the applicable sections of 40 CFR Part 63, Subpart S, National Emission Standards for Hazardous Air Pollutants applicable to the Pulp and Paper Industry. We have developed operational instructions for the M&D continuous kraft sawdust digesters and will record key parameters.

We will not operate #5 M&D continuous kraft sawdust digester and are proceeding with plans to make it inoperable.

We are still awaiting the arrival of a spare Model 77 valve which is due to arrive in January, 2002.

Since both #3 an #4 M&D continuous kraft sawdust digesters are now in compliance, we formally request an end to the compliance extension granted in the August 31, 2000 letter. Please reply in writing if you concur that both #3 and #4 M&D continuous kraft sawdust digesters are in compliance with 40 CFR Part 63, Subpart S, National Emission Standards for Hazardous Air Pollutants applicable to the Pulp and Paper Industry and that this letter is the last monthly report required by the provisions of the compliance extension request.

Please contact me for any questions you may have concerning this report.

Sincerely,

Steven D. DuVall
Senior Air Quality Engineer

Attachments

CC: TEV/JHS/RJP,RBP,FSB,ADW,RJD,SWD,PWO,File
Mr. Kai Hon Shum, EPA Region 10

(b) (4)

(b) (4)

(b) (4)

(b) (4)

(b) (4)

(b) (4)

LONGVIEW FIBRE COMPANY

MAIN OFFICE AND MILLS • LONGVIEW, WASHINGTON 98632
1-360-425-1550

August 13, 2001

Mr. Marc Heffner
Industrial Section
Department of Ecology
P. O. Box 47706
Olympia, WA 98504

Dear Mr. Heffner:

This letter constitutes the eleventh and final monthly update report on Longview Fibre Company's progress towards bringing the M&D continuous kraft sawdust digesters into compliance with the provisions of 40 CFR Part 63, Subpart S, National Emission Standards for Hazardous Air Pollutants applicable to the Pulp and Paper Industry, as required by the compliance extension granted in a letter dated August 31, 2000 from the Environmental Protection Agency's Mr. Douglas E. Hardesty to Longview Fibre Company's Mr. Thomas E. Vaught. This letter is now being addressed to Ecology since the issuance of our Air Operating Permit WA 000007-8, dated April 12, 2001. A copy of this letter will also be sent to the Environmental Protection Agency's Mr. Kai Hon Shum.

We are pleased to report that #3 M&D continuous kraft sawdust digester has its new style, Model 77 rotary inlet pocket feeder valve installed. It also has the digester body vapor space vent line and flow control valve to the #6 blow tank installed. Spot testing for hazardous air pollutants (HAPs) in the pocket feeder purge cyclone confirms proper operation. Emissions testing results were very similar to previous testing at #4 M&D continuous kraft sawdust digester with an average of about 8 ppm total HAPs.

With the completion of this installation, both #3 and #4 M&D continuous kraft sawdust digesters are now compliant with the applicable sections of 40 CFR Part 63, Subpart S, National Emission Standards for Hazardous Air Pollutants applicable to the Pulp and Paper Industry. We have developed operational instructions for the M&D continuous kraft sawdust digesters and will record key parameters.

We will not operate #5 M&D continuous kraft sawdust digester and are proceeding with plans to make it inoperable.

We are still awaiting the arrival of a spare Model 77 valve which is due to arrive in January, 2002.

Since both #3 an #4 M&D continuous kraft sawdust digesters are now in compliance, we formally request an end to the compliance extension granted in the August 31, 2000 letter. Please reply in writing if you concur that both #3 and #4 M&D continuous kraft sawdust digesters are in compliance with 40 CFR Part 63, Subpart S, National Emission Standards for Hazardous Air Pollutants applicable to the Pulp and Paper Industry and that this letter is the last monthly report required by the provisions of the compliance extension request.

Please contact me for any questions you may have concerning this report.

Sincerely,

Steven D. DuVall
Senior Air Quality Engineer

Attachments

CC: TEV/JHS/RJP,RBP,FSB,ADW,RJD,SWD,PWO,File
Mr. Kai Hon Shum, EPA Region 10

Longview Fibre
Paper and Packaging, Inc.
Safety • Environment • Value-Added Products

October 20, 2008

Mr. Marc Heffner
Industrial Section
Department of Ecology
P. O. Box 47706
Olympia, WA 98504-7706

Dear Mr. Heffner:

The purpose of this letter is to respond to the request you made during your recent, May 31, 2008, mill visit and to provide Ecology with information detailing equipment and systems, including currently permitted sources of air pollutants, that have been "abandoned in place". The equipment/systems listed below have been removed from service, have been assigned a value of $0 for tax and depreciation purposes, and will not be maintained in operable condition.

Equipment Description	Date Shut Down
#1 Barge Crane Unloading System	Prior to August. 2006
#2 Wood Screen Room	Prior to 2000
#5 M&D Continuous Digester	March, 2001
#3 Washer Line	~June, 1999
#4 Washer Line and #4 Blow Tank	Prior to 1998
#5 Blow Tank & #2 Blow Heat Recovery System	April, 2001
#5 Washer Line and #3 Blow Tank	July, 2007
#7 Washer Line and #7 Blow Tank	February, 2006
All Batch Digesters (#1-#21)	February, 2006 & earlier
#3 Blow Heat Recovery System	February, 2006
#14 Recovery Furnace	December, 1994
#15 Recovery Furnace, Scrubber and Precipitator	February, 2006
#17 Power Boiler	November, 2002
Sulfur Burner and Molten Sulfur Tank	July, 1997
#1 Lime Kiln	March, 2006
#3 Evaporator System & Skimmer	November, 1997
#4 Evaporator System & Skimmer	May, 2005
#5 Evaporator System & Skimmer	May, 2007
#6 Evaporator System & Skimmer	July, 1999
#1 Cauticizing System	~1995
#3 Cauticizing System	June, 2007
#21 Electric Boiler	Prior to 1989

Equipment Description (Continued)	Date Shut Down
#23 Cogeneration Plant	Aug '02 (tested July '06)
#2 Turbine Generator	December, 2005
#3 Turbine Generator	March, 2006
#1 Paper Machine	August, 2001
#2 Paper Machine	November, 2007
#3 Paper Machine	November, 2001
#4 Paper Machine	August, 2005
#8 Paper Machine	January, 2008
The Bag Plant	~January, 1993
Aniline Printing Operation & Equipment	~April, 2001
The Crepe Machine	~January, 2007
#12 Hi-Density Storage Chest	July, 2007
#14 Hi-Density Storage Chest	July, 2007

We have also shut down some auxiliary equipment and systems that were associated with the shutdown of main production potential emission sources. These include the following:

Stereotype Shop & Equipment
CAMS and Rewinders (#1, #2, #3, #4, #6, #7 & #9)
Pulp Finishing Operation & Baling
The Core Machine

Abandoning the batch digesters, blow heat recovery systems, and #7 washer line reduces the amount of NCG/TRS gases produced and handled. It also reduces the pulp production monitored under the Clean Condensate Alternative (CCA) in that we will no longer utilize the batch digesters during our Kamyr annuals so that pulp production (from the batch digester system) will no longer be counted in the 270 ton per day (TPD), 30 day rolling average limit that we agreed to in the CCA order. Operation of the #3 and #4 M&D sawdust cookers and #6 washer line will never exceed the 270 TPD CCA limit. #5 M&D was not made Cluster Rule compliant and is not used at all.

The abandoned evaporators have not operated much in the last few years and will not impact or change emissions in any noticeable way. The #4 and #5 tail water sumps will remain in service because they currently still service low point condensate drains for the noncondensible gas systems.

All of the above changes can be attributed to our intense effort to streamline our mill, to focus on value added production, and to operate profitably. The incorporation of more

production at the OCC plant and increased use of NSSC pulp has reduced the need for extra pulp mill and recovery process equipment.

Please also note that our #6 Paper Machine has not operated since November, 2006 but is has not been officially abandoned. Other equipment may be shut down, or curtailed, in the future due to our continuing need to match our production capabilities with current market needs. We will keep Ecology informed as to what those future changes may be as they occur.

Please contact me for any questions you may have concerning this letter.

Sincerely,

Steven D. DuVall
Senior Air Quality Engineer

CC: FVM,RJN,ADW,BNW,PWO,JRB,DJH,GLB,
LJG,RLB,JDW,WCH,EMB,PRS,MDA,GAS,RAW,File

STATE OF WASHINGTON
DEPARTMENT OF ECOLOGY
P.O. Box 47600 • Olympia, Washington 98504-7600
(360) 407-6000 • TDD Only (Hearing Impaired) (360) 407-6006

July 26, 2012

Mr. Patrick W. Ortiz
Operational Services Manager
Longview Fibre Paper and Packaging, Inc.
Post Office Box 639
Longview, Washington 98632

Re: Notice of Construction Order No. 9213

Dear Mr. Ortiz:

Enclosed is Notice of Construction (NOC) Order No. 9213. Also enclosed are, a copy of the State Environmental Policy Act (SEPA) Determination of Nonsignificance (DNS) for the project and a copy of the Ecology Response to Comments document for the project.

If you have any questions concerning the content of these documents, please call or write Marc Heffner at telephone/address:

(360) 407-6773
Department of Ecology
PO Box 47600
Olympia, WA 98504-7600

If you wish to appeal the Order, you must follow the procedures described in the Order.

Sincerely,

Teddy Le for

Garin Schrieve
Industrial Section Manager
Waste 2 Resources Program

enclosure

by Certified Mail No. 91 7108 2133 3938 8623 1716

LFPP PM NOC cvrltr.docx

WASHINGTON DEPARTMENT OF ECOLOGY
MAIL STOP 7600
OLYMPIA, WASHINGTON 98504

IN THE MATTER OF AIR EMISSIONS FROM:

Longview Fibre Paper and Packaging, Inc.) 300 Fibre Way (P.O. Box 639)) Longview, WA 98632)		NOC ORDER No. 9213

INTRODUCTION:

Longview Fibre Paper and Packaging, Inc. (LFPP) owns and operates a Kraft pulp and paper mill located near Longview, WA.

This Order approves a project to make changes improving performance and efficiency of several paper machines. The mill currently operates seven paper machines (Nos. 5, 6, 7, 9, 10, 11, & 12). Project changes will increase the hourly production capacity of five machines (Nos. 5, 7, 10, 11, & 12). Capacity of the other two machines will remain the same (Nos. 6 & 9).

Production at the mill is limited by PSD No. 01-03, Second Amendment Final Approval of Prevention of Significant Deterioration Application (PSD 01-03) as follows:

Kraft pulp production	2800 MDT/D, 12-month rolling average *
Total primary production	3600-MDT/D, 12 month rolling average **

* PSD 01-03 Condition No. 1.96.
** PSD 01-03 Condition No. 1.97.

These production limits will remain the same. Total paper machine capacity both before and after this project is in excess of the 3600 MDT/D total primary production limit. Improved paper machine efficiency and improved paper grade production flexibility are expected upon project completion.

Recent 12 month average total primary production has been ~2900 MDT/D. After project completion, increased mill production is expected. Existing mill pulp production capacity is adequate to provide furnish (pulp) to the paper machines at the permitted total primary production capacity of 3600 MDT/D.

Two documents along with additional supporting information describing the project were submitted. Initial documents submitted were:

- A Prevention of Significant Deterioration (PSD) analysis: *Longview Fibre Paper and Packaging, Inc. – PSD Applicability Addendum for NOC Order No. 8429 (dated February 16, 2012).* Based on the analysis, LFPP concluded emissions increases due to the projects do <u>not</u> require a PSD Permit.
- A NOC application document: *Longview Fibre Paper and Packaging, Inc. – Notice to Construct Application (dated February 2012).* The analysis concluded that maximum

short-term emission rate increases are expected only from the paper machines being modified (Nos. 5, 7, 10, 11, & 12). The emission rate increases are addressed in this order.

Key additional submissions were:

A March 26, 2012 letter from Trinity Consultants and an April 17, 2012 e-mail from Anupama Krishnan (Trinity Consultants) responding to Ecology questions concerning the initial submissions.

A May 3, 2012 letter from Trinity Consultants re-evaluating the TAPs analysis. Paper machine maximum capacity rates (ADTP/hr) were adjusted to reflect daily rather than annual maximum rates of paper machine operation and additional pollutants were evaluated.

A May 16, 2012 e-mail from Roberto Artiga (LFPP) documenting brownstock washer water methanol concentrations at LFPP.

This NOC Order does not relax any requirements found in PSD 01-03 or any other regulatory orders previously issued to LFPP.

Authority for this Order comes from:

WAC 173-400-110 - New source review (NSR).

RCW 70.94.141(3) which authorizes Ecology to issue such orders as may be necessary to effectuate the purpose of RCW 70.94.

FINDINGS:

Pursuant to New Source Review (NSR) regulations in the Washington Administrative Code (WAC) 173-400-110, and based upon the complete Notice of Construction Application submitted by the LFPP and the technical analysis performed by the Department of Ecology (Department), the Department now finds the following:

1. A NOC Application and a PSD Addendum were submitted for a paper machine project at the LFPP Mill. Additional information was submitted as requested. The application was determined to be complete on June 6, 2012.

2. The LFPP mill has the potential to emit greater than 100 tons per year (T/yr) for at least one Prevention of Significant Deterioration (PSD) pollutant. The mill is therefore classified as a major stationary source under the PSD permitting program and is subject to PSD permitting consideration under Washington Administrative Code (WAC) 173-400-720 and 40 CFR 52.21.

   A PSD Permit is required if the project is a "major modification," (i.e., if the net emissions increase resulting from the modification is greater than the PSD Significant Emission Rate (SER) threshold for any regulated pollutant). Long term emission changes (T/yr) for listed pollutants are calculated and compared to the appropriate SER.

   LFPP submitted a PSD applicability analysis which considered emissions from this paper machine project along with emissions from the mill infrastructure improvements project addressed in NOC Order No. 8429. This approach was taken to address possible aggregation issues. NOC Order No. 8429 was issued on June 2, 2011. Emissions increases considered as part of this paper machine project included those due to paper machine modifications plus those from pulp mill units run at higher rates to meet increased pulp demand at the modified paper machines. Based on the analysis, LFPP concluded any

emission changes due to the projects do not require a PSD Permit.

As directed by LFPP in their applicability submission, Ecology did not perform a formal PSD applicability analysis on the PSD Addendum (see WAC 173-400-720(4)(b)(iii)(D)(ii)). Information submitted by LFPP concerning PSD applicability was considered adequate to meet the requirements of WAC 173-400-720(4)(b)(iii)(D)(i)(A-C) and allow the paper machine project to proceed without a PSD Permit.

A comparison of actual annual emissions to emission calculations found in the NOC application will be required by this Order to verify that SERs listed in 40 CFR 52.21 are not exceeded. The comparison will be required for the first 10 years after project completion.

The PSD applicability calculations included reductions for permanently shutting down Paper Machine No. 2 and #3 Cooker. This Order will require that these units shall no longer be operated.

3. The NOC application document concluded that the only maximum short-term emission rate increases expected are from the paper machines being modified (Nos. 5, 7, 10, 11, & 12). Criteria pollutants for which increases are expected include $PM/PM_{10}/PM_{2.5}$ and VOCs. Emission increases from the modified paper machines will be considered in this Order.

   Existing pulp mill units do not require modification to meet increased pulp demand at the modified paper machines. Maximum short-term emission rates will not increase at the unmodified pulp mill units. Emissions from these unmodified pulp mill units are not addressed in this Order.

   Estimated criteria pollutant emission changes due paper machine modifications were as follows:

Parameter	Increase in Maximum Hourly emission rate* (lb/hr)
PM	0.17
PM_{10}	0.17
$PM_{2.5}$	0.17
VOCs	1.05

   * calculated using the sum of the maximum hourly production rate increases from the five paper machines (8.13 ADTP/hr) and the appropriate emission factors ($PM/PM_{10}/PM_{2.5}$ = 0.021 lb/ADTP and VOCs = 0.129 lb/ADTP).

4. Toxic air pollutants (TAPs) were evaluated for the project. Emission increases due to the project were calculated and compared to "small quantity emission rate" (SQER) and *de minimis* levels found in WAC 173-460-150. Those TAPs exceeding the SQER level were analyzed using the AERMOD model. All TAPs modeled were found to be at levels less than the acceptable source impact level (ASIL) in WAC 173-460-150.

   Because all TAPs emissions are projected to be less than the SQER or to have impacts less than the ASIL based on AERMOD modeling, there are no further requirements for TAPs as a result of the analysis. Toxic effects are not expected at the emission rates projected for the project.

The analysis in part relied on data demonstrating TAPS emission rates from paper machines at Clean Condensate kraft mills are less than emission rates at typical kraft mills. The Clean Condensate data were collected at mills having a methanol concentration <300 ppm in the final-stage brownstock washer shower water. LFPP is a Clean Condensate mill and data were provided to demonstrate the methanol concentration is <300 ppm at the mill.

A requirement that the methanol concentration shall not exceed 300 ppm in the final-stage brownstock washer shower water will be included in this Order. This requirement is being included to address compliance with WAC 173-460. WAC 173-460 is not part of the federally enforceable Washington State Implementation Plan (SIP). Therefore, this requirement will be identified as "state-only" enforceable.

The same TAPs emission factors, in units of lb/ADTP, were applied to all five paper machines being modified. The TAPs analysis was based on a total maximum production rate from the five machines being modified of 220 ADTP/hr.

A requirement that the daily total maximum production rate for the five machines being modified (sum of production at Paper Machine Nos. 5, 7, 10, 11, & 12) will not exceed 220 ADTP/hr will be included in this Order.

5. BACT analysis of paper machine $PM/PM_{10}/PM_{2.5}$ and VOCs emissions per WAC 173-400-113(2) and a tBACT analysis for TAPs emissions per WAC 173-460-040(3)(a) were performed. Control techniques for paper machine vents were considered impractical because of the high moisture content and high volume of the vent exhaust gases and the minimal pollutant concentrations. The analysis concluded that operating in a manner consistent with good air pollution control practices, including minimizing usage rates and VOC contents of additive chemicals, represents BACT.

   PSD 01-03 Condition 4 states:

   > Additives used in the paper-making process on the paper machines shall be "low-VOC". LFC *(sic)* shall annually submit a list of additives used in the paper-making process on the paper machines and identify those that are <u>not</u> "low-VOC."

   A similar condition will be included in this Order.

6. Terms and conditions of this Order are considered "federally enforceable" for Title 5 Air Operating Permit (AOP) purposes unless specifically identified as a "state-only" term or condition.

7. An environmental checklist was submitted with the NOC Application which considered environmental impacts of the project as required by the State Environmental Policy Act (SEPA - see chapter 43.21C RCW). Ecology reviewed the checklist and made a Determination of Nonsignificance (DNS) which was issued on June 13, 2012.

8. All appropriate NSR review fees were paid in compliance with WAC 173-455-120.

Therefore, it is ordered that the project, as described in said Notice of Construction Application dated February 2012 and more specifically detailed in additional information submitted to the

Department and on reference thereto, is approved for construction, installation, and operation, provided the following conditions are met:

CONDITIONS:

1. The requirements in this condition apply to the final-stage brownstock washer shower water. The limits specified in this condition shall not be exceeded. The limits shall be monitored at the monitoring frequency and with the compliance test methods specified. Reporting shall be as specified for each parameter. This is a "state-only" enforceable requirement.

Parameter	**Limit** (shall not exceed)	**Monitoring & Reporting**
Methanol	300 ppm, 12 month rolling average.	Collect representative sample monthly and analyze using NCASI 94.02*. Report monthly test result and 12-month rolling average in monthly report.

* NCASI 94.02: NCASI Method DI/MEOH–94.02, Methanol in Process Liquids GC/FID (Gas Chromatography/Flame Ionization Detection), August 1998, Methods Manual, NCASI, Research Triangle Park, NC., [see §63.14(f) and §63.457(c)(3)(ii)], or an alternative approved by Ecology.

2. The requirements in this condition apply to the sum of production at Paper Machine Nos. 5, 7, 10, 11, & 12. The limits specified in this condition shall not be exceeded. The limits shall be monitored at the monitoring frequency and with the compliance test methods specified. Reporting shall be as specified for each parameter.

Parameter	**Limit** (shall not exceed)	**Monitoring & Reporting**
Daily Production	220 ADTP/hr, daily average.	Sum average hourly production (ADTP/hr) at Paper Machine Nos. 5, 7, 10, 11, & 12 daily. Report maximum daily sum for the month and all limit exceedences in monthly report.

3. Paper Machine Nos. 5, 7, 10, 11, & 12 must be operated in a manner consistent with good air pollution control practices, including minimizing usage rates and VOC contents of additive chemicals. Additives used in the paper-making process on these paper machines shall be "low-VOC". LFPP shall annually submit a list of additives used in the paper-making process on these paper machines and identify those that are <u>not</u> "low-VOC."

4. For the first 10 full calendar years after the Project is complete LFPP shall:
   compare the actual T/yr emissions for units considered in the *Longview Fibre Paper and Packaging, Inc. – PSD Applicability Addendum for NOC Order No. 8429 (dated February 16, 2012)* with the baseline actual emissions and contemporaneous increases and decreases used in PSD applicability determination calculations to confirm that any emissions increases do not exceed a SER listed in 40 CFR 52.21, and
   report results of the comparison required under WAC 173-400-720(4)(b)(iii)(D)(i) through (v) within 60 days after the end of the calendar year for which the comparison was made.

5. The following units shall no longer be operated:
   Paper Machine No. 2.
   #3 Cooker.

6. The following notifications concerning the project shall be submitted to Ecology:
   a. Within 15 days of commencing construction, a letter informing Ecology of the date on which construction commenced and a description of the construction activity undertaken.
   b. Annually, on the anniversary date of commencing construction until the project is completed, a letter informing Ecology of progress made on the project during the prior year.
   c. Within 30 days of completing the project or permanently stopping work on the project, a letter informing Ecology of the date on which the project was completed or work on the project was permanently stopped.

7. Ecology may approve alternate compliance test methods that are of equivalent stringency. Compliance monitoring frequency may be adjusted by Ecology depending on compliance history.

8. Operating and maintenance (O&M) manuals for all equipment added or modified by this project, that has the potential to affect emissions to the atmosphere, shall be developed and followed. Copies of the manuals shall be available to Ecology. Emissions that result from a failure to follow the requirements of the manuals may be considered proof that the equipment was not properly operated and maintained.

9. Access to the source by the U.S. Environmental Protection Agency (EPA), Ecology, or local regulatory personnel shall be permitted upon request and presentation of proper credentials for the purpose of compliance assurance inspections. Failure to allow access is grounds for revocation of this determination of approval.

10. At all times, including periods of startup, shutdown, and upset, LFPP shall, to the extent practicable, maintain and operate all equipment that is capable of contributing to air pollution in a manner consistent with good air pollution control practice for minimizing emissions. During periods of upset, LFPP shall take immediate and appropriate corrective action to minimize emissions, including slowing or shutting down the emission unit.

11. Ecology may modify conditions contained herein, pursuant to legal requirements, based on air quality, emissions monitoring results, or upon the request of LFPP.

12. The permittee shall retain records of all required monitoring data and support information for a minimum period of 5 years from the date of monitoring sample, measurement, report, or application. Support information includes all calibration and maintenance records and all data from continuous monitoring instrumentation, and copies of all reports required by this order.

13. This approval shall become invalid if construction of the project is not commenced within eighteen (18) months after receipt of final approval, if construction is discontinued for a period of eighteen months or more, or if construction is not completed within a reasonable time. Ecology may extend the eighteen-month period upon a satisfactory showing by the permittee that an extension is justified.

14. The permittee must comply with all applicable requirements of the federal Clean Air Act.

15. Nothing in this Approval Order shall be construed to relieve the permittee of its obligations under any local, state or federal laws or regulations.

Failure to comply with this Order may result in the issuance of civil penalties or other actions, whether administrative or judicial, to enforce the terms of this Order.

Authorization may be modified, suspended or revoked in whole or part for cause including, but not limited to, the following:

1. Violation of any terms or conditions of this authorization.
2. Obtaining this authorization by misrepresentation or failure to disclose fully all relevant facts.

The provisions of this authorization are severable and, if any provision of this authorization, or application of any provision of this authorization to any circumstance, is held invalid, the application of such provision to their circumstances and the remainder of this authorization, shall not be affected thereby.

APPEAL PROCESS

You have a right to appeal this Order to the Pollution Control Hearing Board (PCHB) within 30 days of the date of receipt of this Order. The appeal process is governed by Chapter 43.21B RCW and Chapter 371-08 WAC. "Date of receipt" is defined in RCW 43.21B.001(2).

To appeal you must do the following within 30 days of the date of receipt of this Order:

- File your appeal and a copy of this Order with the PCHB (see addresses below). Filing means actual receipt by the PCHB during regular business hours.
- Serve a copy of your appeal and this Order on Ecology in paper form - by mail or in person. (See addresses below.) E-mail is not accepted.

You must also comply with other applicable requirements in Chapter 43.21B RCW and Chapter 371-08 WAC.

Your appeal alone will not stay the effectiveness of this Order. Stay requests must be submitted in accordance with RCW 43.21B.320.

Address and Location Information

Street Addresses	Mailing Addresses
Department of Ecology Attn: Appeals Processing Desk 300 Desmond Drive SE Lacey, WA 98503 **Pollution Control Hearings Board** 1111 Israel Road SW STE 301 Tumwater, WA 98501	**Department of Ecology** Attn: Appeals Processing Desk PO Box 47608 Olympia, WA 98504-7608 **Pollution Control Hearings Board** PO Box 40903 Olympia, WA 98504-0903

More Information

- **Pollution Control Hearings Board**
  www.eho.wa.gov/Boards_PCHB.aspx
- **Chapter 43.21B RCW, Environmental Hearings Office – Pollution Control Hearings Board**
  http://apps.leg.wa.gov/RCW/default.aspx?cite=43.21B
- **Chapter 371-08 WAC – Practice and Procedure**
  http://apps.leg.wa.gov/WAC/default.aspx?cite=371-08
- **Chapter 34.05 RCW – Administrative Procedure Act**
  http://apps.leg.wa.gov/RCW/default.aspx?cite=34.05
- **Chapter 70.94 RCW, Washington Clean Air Act**
  http://apps.leg.wa.gov/RCW/default.aspx?cite=70.94
- **Air Quality Rules**
  www.ecy.wa.gov/laws-rules/ecywac.html#air

SIGNATURE

Teddy Le for

Garin Schrieve, P.E.
Industrial Section Manager
Waste 2 Resources Program

7/26/12

Date

Reviewed by:

M Heffner

Marc Heffner, P.E.
Industrial Section Environmental Engineer
Waste 2 Resources Program

7/26/12

Date

STATE OF WASHINGTON

DEPARTMENT OF ECOLOGY

P.O. Box 47600 • Olympia, Washington 98504-7600
(360) 407-6000 • TDD Only (Hearing Impaired) (360) 407-6006

STATE ENVIRONMENTAL POLICY ACT DETERMINATION OF NONSIGNIFICANCE

Permit Number: Notice of Construction (NOC) Order No. 9213

Description of proposal: The proposed project is to make changes improving performance and efficiency of five existing paper machines. After the modifications, the maximum hourly production rates of the five machines will increase by an average of 4%. The current total mill daily average production limit will remain in effect after completion of the project.

Proponent: Longview Fibre Paper and Packaging, Inc.
300 Fibre Way (P.O. Box 639)
Longview, WA 98632

Location of proposal: Longview Fibre Paper and Packaging, Inc. mill site at 300 Fibre Way, Longview, WA 98632.

Lead agency: Department of Ecology / Waste 2 Resources Program / Industrial Section / Pulp & Paper Unit

The lead agency for this proposal has determined it does not have a probable significant adverse impact on the environment. An environmental impact statement (EIS) is not required under RCW 43.21C.030 (2)(c). This decision was made after review of a completed environmental checklist. This information is available to the public on request.

☐ There is no comment period for this DNS.

☐ This DNS is issued after using the optional DNS process in WAC 197-11-355. There is no further comment period on the DNS.

☒ This DNS is issued under WAC 197-11-340(2); the lead agency will not act on this proposal until the comment period ends July 13, 2012.

Responsible official GARIN SCHRIEVE

Position/title INDUSTRIAL SECTION MANAGER Phone 360/407-6868

Address PO BOX 47600 OLYMPIA, WA 98504-7600

Date 6/7/12 Signature

(b) (4)