SDMS Document
94628

Diamond Alkali Co.
NJD980528996
8.1.2
Passaic Valley Sewerage Commissioners

Passaic Valley Sewerage Commissioners
Response to Request for Information
USEPA, Region 2

Item No. 7
PVSC Drawing Set 2

Document order #13

946280001

Passaic Valley Sewerage Commissioners
Response to Request for Information
USEPA, Region 2

Item No. 7

PASSAIC VALLEY SEWERAGE COMMISSIONERS

COMBINED SEWER SYSTEM
FACILITIES INVENTORY AND
ASSESSMENT ANALYSIS

VOLUME 4

REGULATOR PLANS AND SECTIONS

MARCH 1997

946280002

PVSC Drawing Set 2 - Item 7

PASSAIC VALLEY
SEWERAGE COMMISSIONERS

COMBINED SEWER SYSTEM
FACILITIES INVENTORY AND
ASSESSMENT ANALYSIS

TABLE OF CONTENTS

PAGE NO.

VOLUME 1

EXECUTIVE SUMMARY 1

CHAPTER 1 INTRODUCTION

1.1 Introduction 6

CHAPTER 2 INSPECTION AND ASSESSMENT OF THE SEWER LINES

2.1 Main Interceptor 7
2.2 Branch/Lateral Interceptors 13
2.3 Pumping Stations 62

CHAPTER 3 INSPECTION AND ASSESSMENT OF THE REGULATORS

3.1 Results of the Field Inspection Program 65

CHAPTER 4 SUMMARY OF REHABILITATION AND MAINTENANCE OF THE REGULATORS

4.1 Rehabilitation and Maintenance of the Regulators 122

VOLUME 2

CHAPTER 5 FIGURES

5.1 Main Interceptor Plans and Profiles

VOLUME 3

5.2 Branch Interceptor and Lateral Sewer Plans and Profiles

VOLUME 4

5.3 Regulators Plans and Sections

VOLUME 5

CHAPTER 6 APPENDICES

A) Regulator Inspection Report

VOLUME 6

B) Main Interceptor Manhole Inspection Reports

VOLUME 7

C) Branch Interceptor and Lateral Sewer Manhole Investigation Reports

VOLUME 8

D) Regulator Photographs
E) Main Interceptor Photographs
F) Branch Interceptor and Lateral Photographs

VOLUME 9

G) Video Inspection Reports - Main Interceptor

VOLUME 10

H) Video Inspection Reports - Branch Interceptor and Lateral

VOLUME 11

H) Video Inspection Reports - Branch Interceptor and Lateral Cont'd
I) Video Tape Summary
J) Regulator Video Summary
K) Main Interceptor Manhole Video Summary
L) Branch Interceptor and Lateral Manhole Video Summary

PASSAIC VALLEY SEWERAGE COMMISSIONERS

COMBINED SEWER SYSTEM
FACILITIES INVENTORY AND ASSESSMENT ANALYSIS

CHAPTER 5

SUMMARY TABLE

5.3 REGULATOR PLANS AND SECTIONS

Regulator	Figure No.
Curtis Place Regulator (001)	001-1 to 001-4
Mulberry Street Regulator (002)	002-1 to 002-4
West Broadway Regulator (003)	003-1 to 003-3
Bank Street Regulator (004)	004-1 to 004-3
Bridge Street Regulator (005)	005-1 to 005-4
Montgomery Street Regulator (006)	006-1 to 006-4
Straight Street Regulator (007)	007-1 to 007-4
Franklin Street Regulator (008)	008-1 to 008-4
Keen Street Regulator (009)	009-1 to 009-4
Warren Street Regulator (010)	010-1 to 010-4
Sixth Avenue Regulator (011)	011-1 to 011-3
East Fifth Street Regulator (012)	012-1 to 012-3
East Eleventh Street Regulator (013)	013-1 to 013-3
Fourth Avenue Regulator (014)	014-1 to 014-4
S.U.M. Park Regulator (015)	015-1 to 015-2
Northwest Street Regulator (016)	016-1 to 016-2
Arch Street Regulator (017)	017-1
Jefferson Street Regulator (018)	018-1
Stout Street Regulator (019)	019-1
North Straight Street Regulator (020)	020-1
Bergen Street Regulator (021)	021-1 to 021-3
Short Street Regulator (022)	022-1 to 022-2
Second Avenue Regulator (023)	023-1 to 023-3
Third Avenue Regulator (024)	024-1 to 024-4
East Thirty Third Avenue Regulator (025)	025-1 to 025-4
East Twentieth Avenue Regulator (026)	026-1 to 026-4
Market Street Regulator (027)	027-1 to 027-4
Stewart Avenue Regulator (028)	028-1 to 028-3
Washington Avenue Regulator (029)	029-1 to 029-2
Bergen Avenue Regulator (030)	
e. Nairn Avenue Regulator (031)	031-1 to 031-2
Marshall Street Regulator (032)	032-1 to 032-2
Johnston Avenue Regulator (033)	033-1 to 033-4

Regulator	Figure No.
Ivy Street Regulator (034)	034-1 to 034-3
b. Bergen Avenue Regulator (035)	035-1 to 035-2
Tappan Street Regulator (036)	036-1
c. Duke Street Regulator (037)	037-1 to 037-2
Central Avenue Regulator (038)	038-1 to 038-2
New Street Regulator (039)	039-1 to 039-2
e. Cleveland Avenue Regulator (040)	040-1 to 040-2
Harrison Avenue Regulator (041)	041-1 to 041-2
Dey Street Regulator (042)	042-1 to 042-2
Middlesex Street Regulator (043)	043-1 to 043-2
Bergen Street Regulator (044)	044-1 to 044-2
Worthington Avenue Regulator (045)	045-1 to 045-4
Verona Avenue Regulator (046)	046-1 to 046-7
Delavan Avenue Regulator (047)	047-1
Herbert Place Regulator (048)	048-1 to 048-4
Third Avenue Regulator (049)	049-1 to 049-3
Fourth Avenue Regulator (050)	050-1 to 050-3
Clay Street Regulator (051)	051-1 to 051-6
f. Orange Street Regulator (052)	052-1 to 052-4
Bridge Street Regulator (053)	053-1 to 053-3
Rector Street Regulator (054)	054-1 to 054-3
a. Saybrook Place Regulator (055)	055-1 to 055-4
City Dock Regulator (056)	056-1 to 056-5
Jackson Street Regulator (057)	057-1 to 057-4
Polk Street Regulator (058)	058-1 to 058-3
Freeman Street Regulator (059)	059-1 to 059-4
Peddie Street Regulator (060)	060-1 to 060-3
Queens District Regulator (061)	061-1 to 061-3
Waverly District Regulator (062)	062-1 to 062-3
Yantacaw Pumping Station Regulator (063)	063-1 to 063-2
Yantacaw Street Regulator (064)	064-1 to 064-3
Wallington Pump Station Regulator (065)	065-1 to 065-3
North Arlington Branch Regulator (066)	066-1 to 066-3

Regulator	Figure No.
Hudson Street Regulator (067)	067-1 to 067-2
Garden State Paper Regulator (068)	
Lodi Force Main Regulator (069)	069-1 to 069-2
Passaic Tailrace Regulator (070)	070-1 to 070-2
Dundee Island Lateral Regulator (071)	
Woodward Avenue Regulator (072)	072-1
Pierrepont Avenue Regulator (073)	073-1
Rutherford Avenue Regulator (074)	074-1
Second River Joint Meeting Regulator (075)	075-1
Passaic Street Regulator (076)	076-1 to 076-2
Ogden Street Regulator (077)	077-1 to 077-3
Brown Street Regulator (078)	078-1 to 078-2
Clark Street Regulator (079)	079-1 to 079-2
Albion Place Regulator (080)	080-1
Temple Street Regulator (081)	081-1
Lawrence Street Regulator (082)	082-1
South Bay Avenue Regulator (083)	083-1 to 083-2

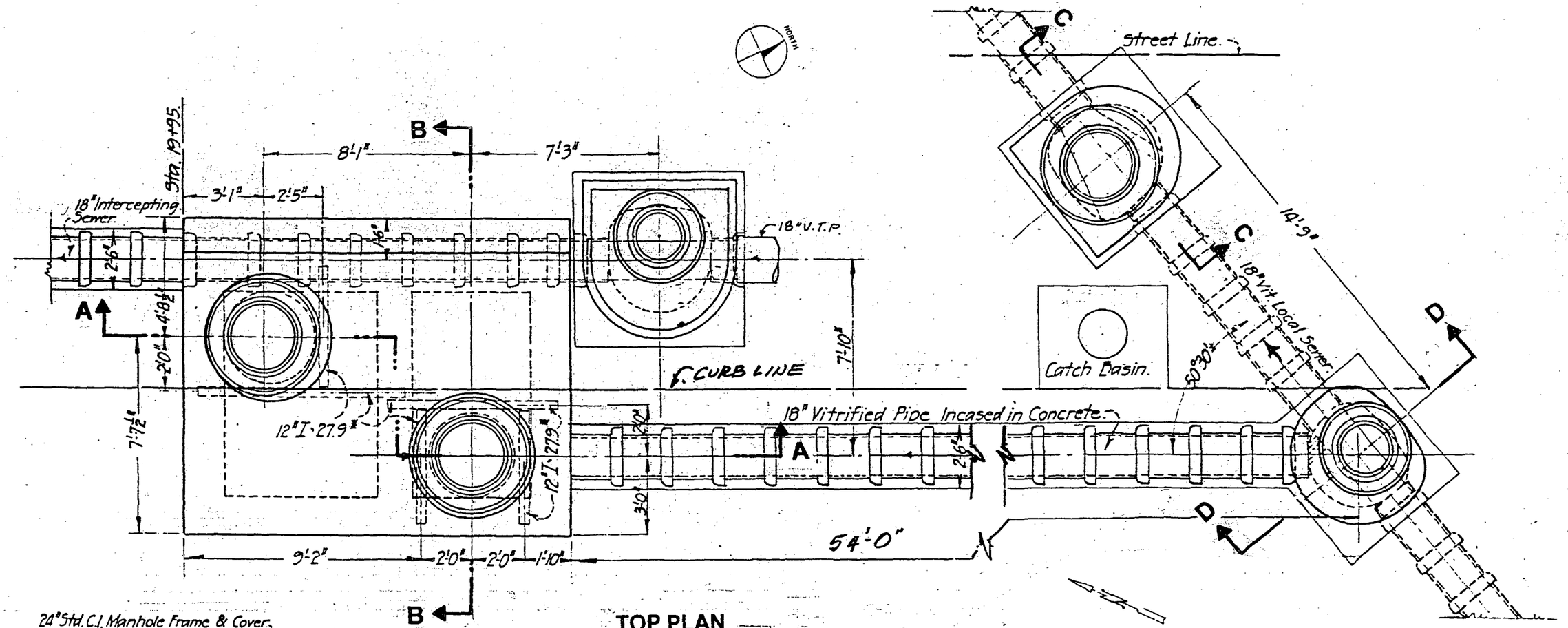

TOP PLAN

4 0 4
GRAPHIC SCALE IN FEET

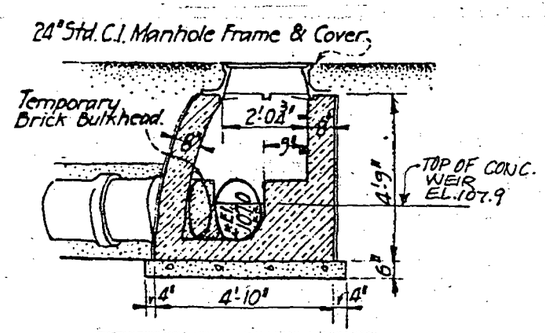

SECTION D-D

4 0 4
GRAPHIC SCALE IN FEET

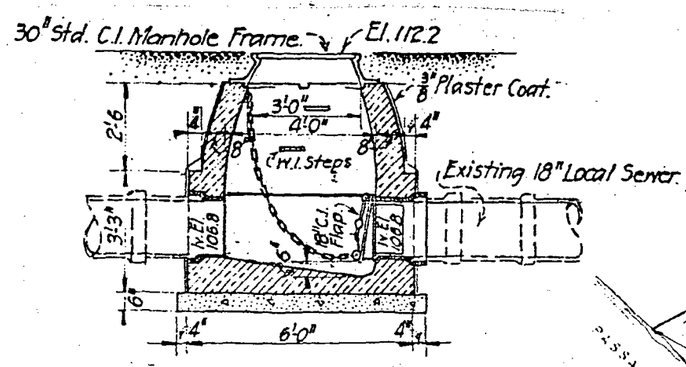

SECTION C-C

4 0 4
GRAPHIC SCALE IN FEET

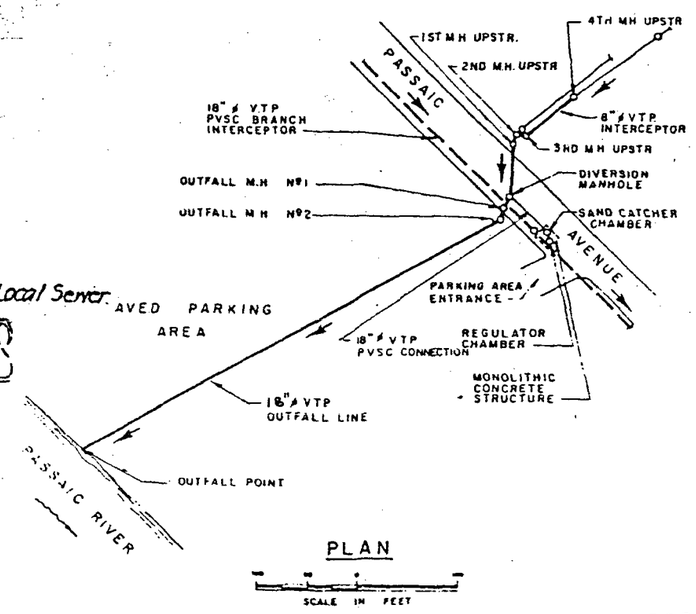

PLAN

SCALE IN FEET

CHARLES A. MANGANARO
CONSULTING ENGINEERS
A PROFESSIONAL CORPORATION

COURT PLAZA NORTH, 25 MAIN STREET
HACKENSACK, NJ 07601-7032

946280005

NUMBER 031
NAIRN AVENUE REGULATOR
KEARNY

PASSAIC VALLEY
SEWERAGE COMMISSIONERS

COMBINED SEWER SYSTEM
FACILITIES INVENTORY AND
ASSESSMENT ANALYSIS

FIGURE 031-2

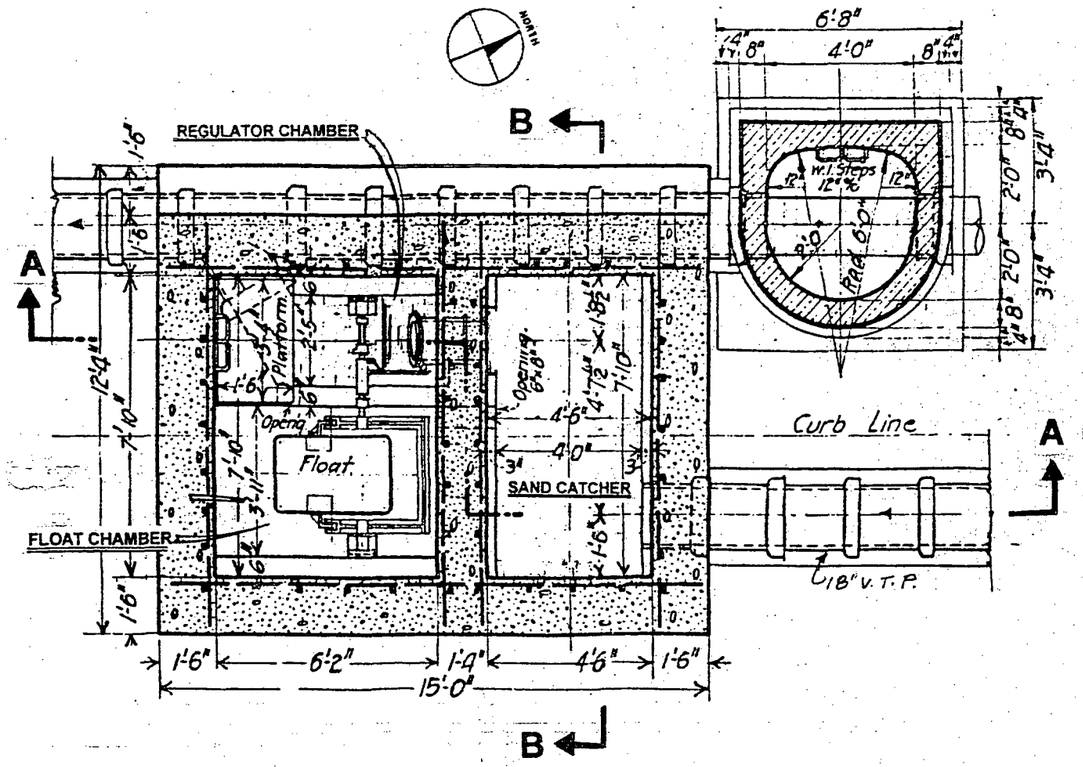

SECTIONAL PLAN

4 0 4
GRAPHIC SCALE IN FEET

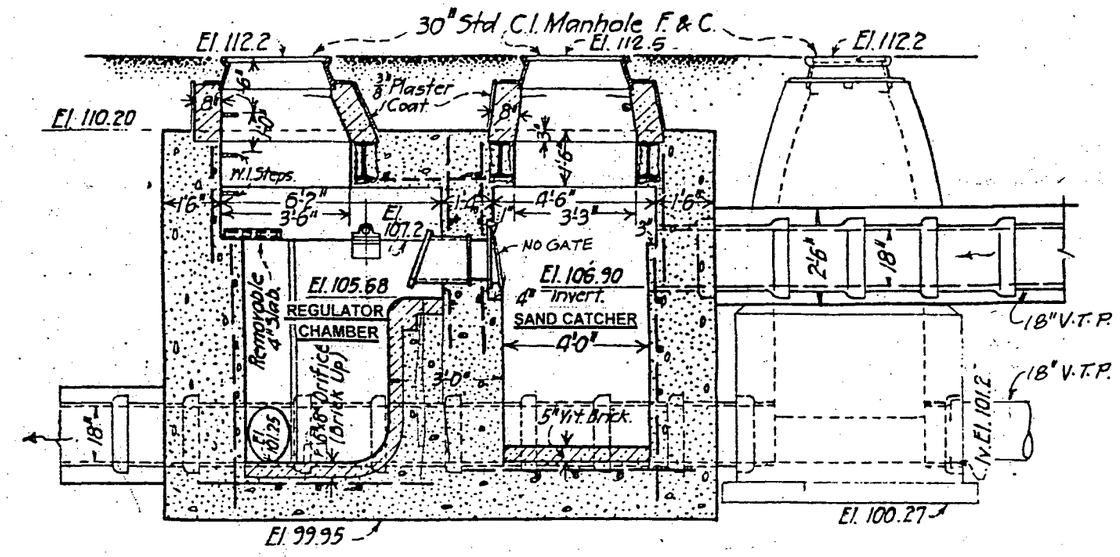

SECTION A-A

4 0 4
GRAPHIC SCALE IN FEET

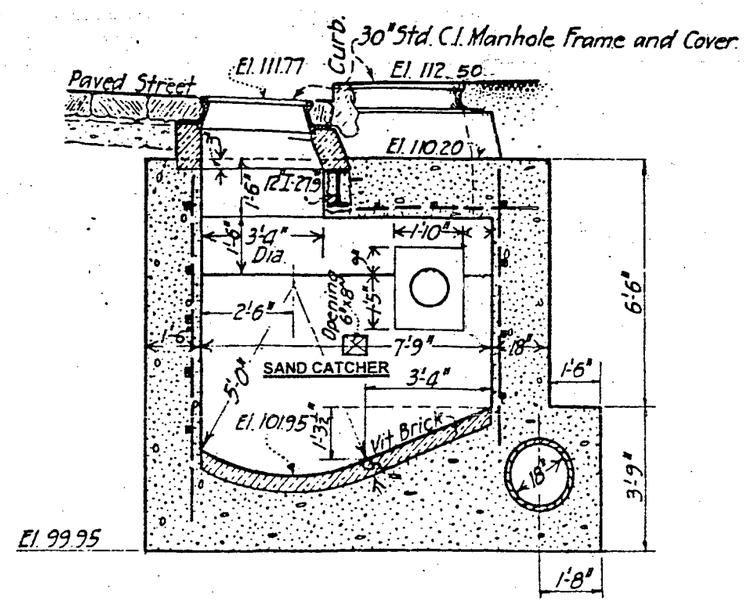

SECTION B-B

4 0 4
GRAPHIC SCALE IN FEET

CHARLES A. MANGANARO
CONSULTING ENGINEERS
A PROFESSIONAL CORPORATION

COURT PLAZA NORTH, 25 MAIN STREET
HACKENSACK, NJ 07601-7032

946280006

NUMBER 031
NAIRN AVENUE REGULATOR
KEARNY

PASSAIC VALLEY
SEWERAGE COMMISSIONERS

COMBINED SEWER SYSTEM
FACILITIES INVENTORY AND
ASSESSMENT ANALYSIS

FIGURE 032-1

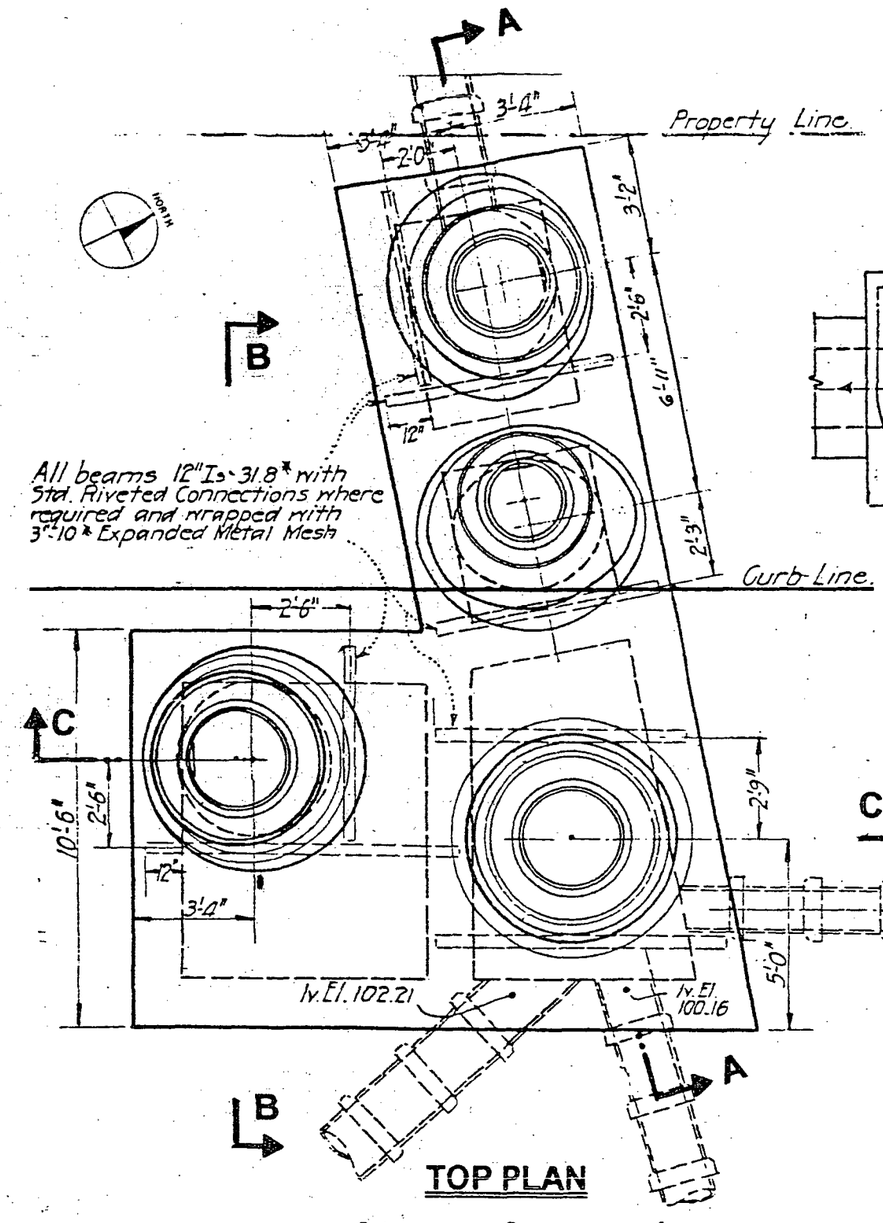

TOP PLAN

4 0 4
GRAPHIC SCALE IN FEET

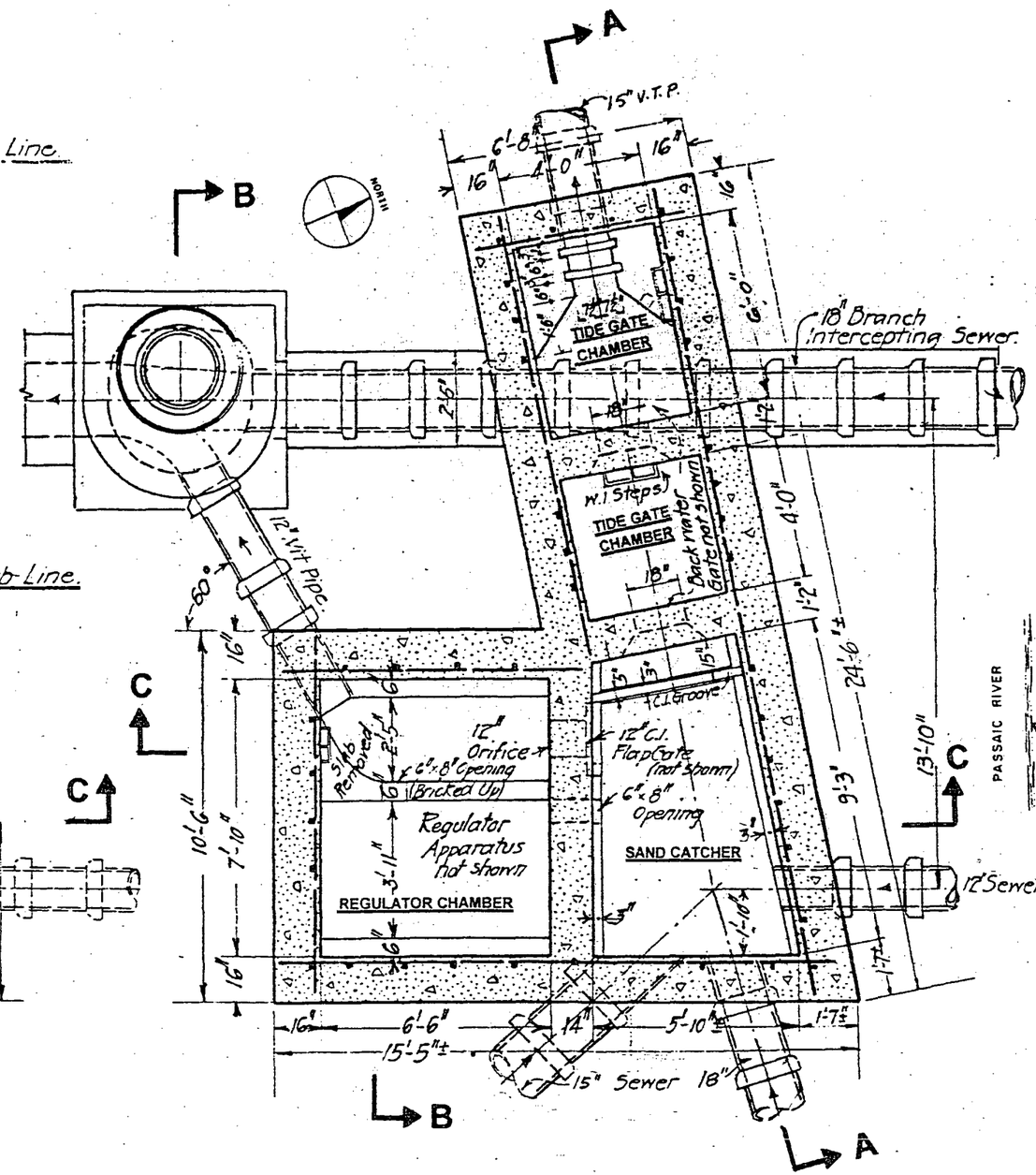

SECTIONAL PLAN

4 0 4
GRAPHIC SCALE IN FEET

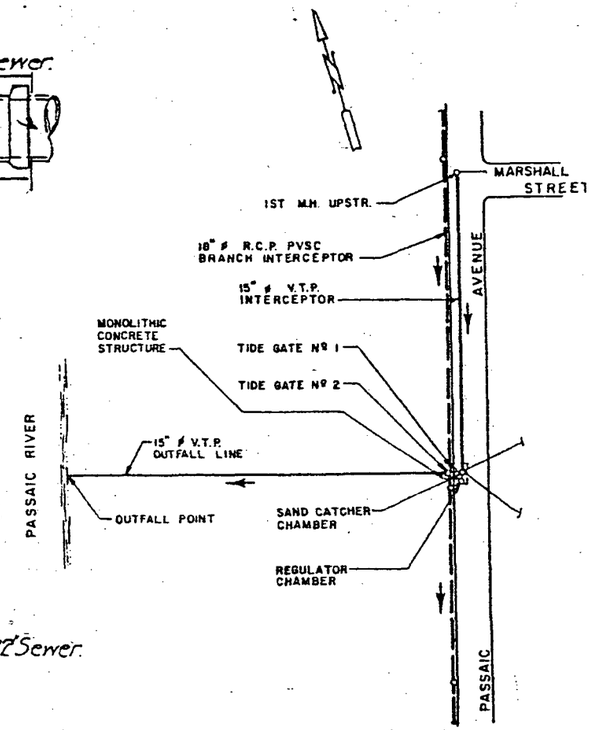

PLAN

SCALE IN FEET

CHARLES A. MANGANARO
CONSULTING ENGINEERS
A PROFESSIONAL CORPORATION

COURT PLAZA NORTH, 25 MAIN STREET
HACKENSACK, NJ 07601-7032

946280007

NUMBER 032
MARSHALL STREET REGULATOR
KEARNY

PASSAIC VALLEY
SEWERAGE COMMISSIONERS

COMBINED SEWER SYSTEM
FACILITIES INVENTORY AND
ASSESSMENT ANALYSIS

FIGURE 032-2

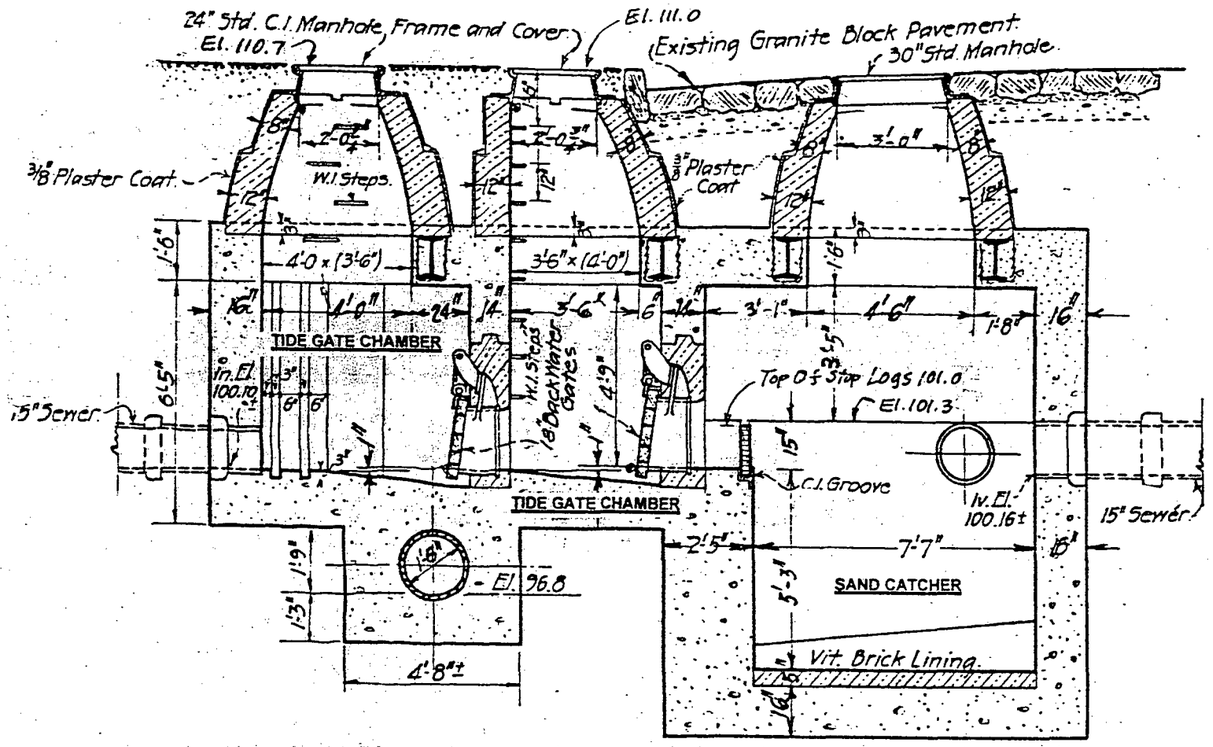

SECTION A-A

4 0 4
GRAPHIC SCALE IN FEET

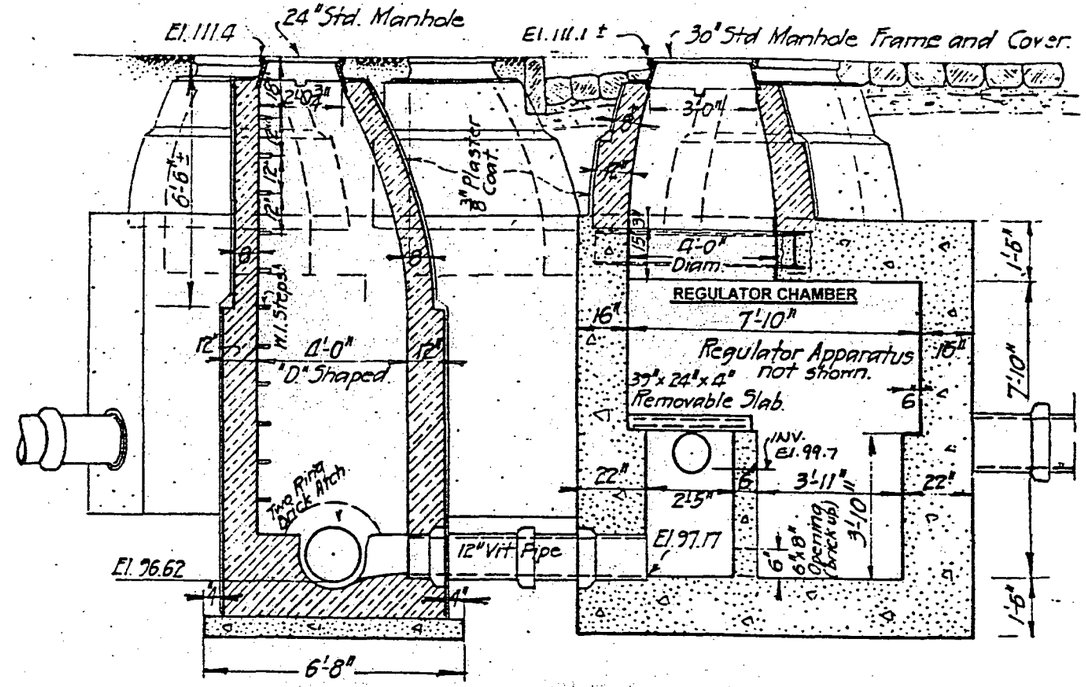

SECTION B-B

4 0 4
GRAPHIC SCALE IN FEET

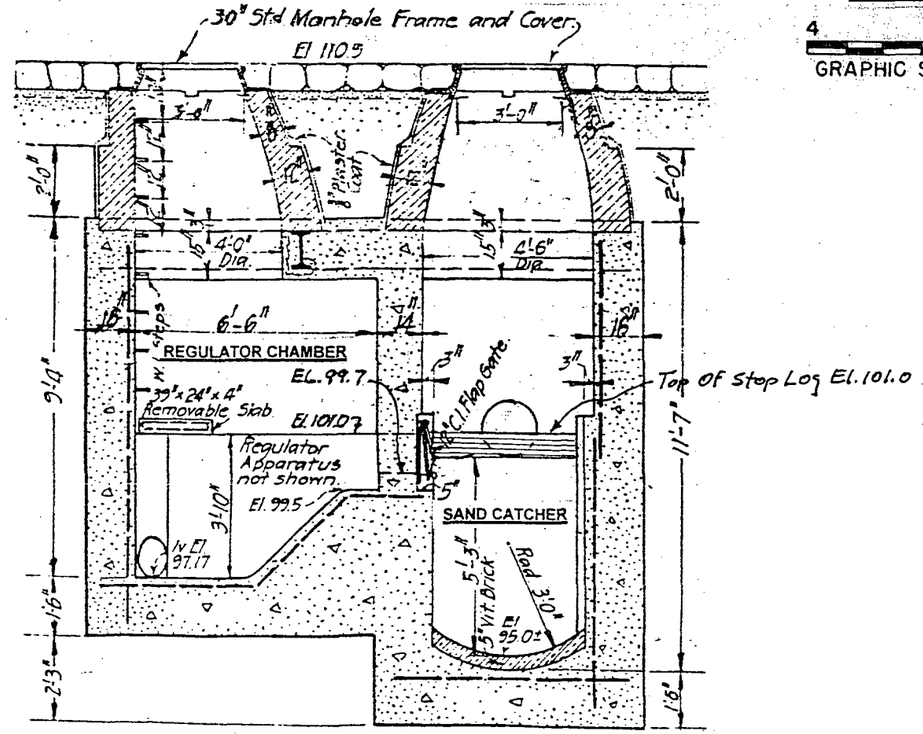

SECTION C-C

4 0 4
GRAPHIC SCALE IN FEET

CHARLES A. MANGANARO
CONSULTING ENGINEERS
A PROFESSIONAL CORPORATION

COURT PLAZA NORTH, 25 MAIN STREET
HACKENSACK, NJ 07601-7032

946280008

NUMBER 032
MARSHALL STREET REGULATOR
KEARNY

PASSAIC VALLEY
SEWERAGE COMMISSIONERS

COMBINED SEWER SYSTEM
FACILITIES INVENTORY AND
ASSESSMENT ANALYSIS

FIGURE 033-1

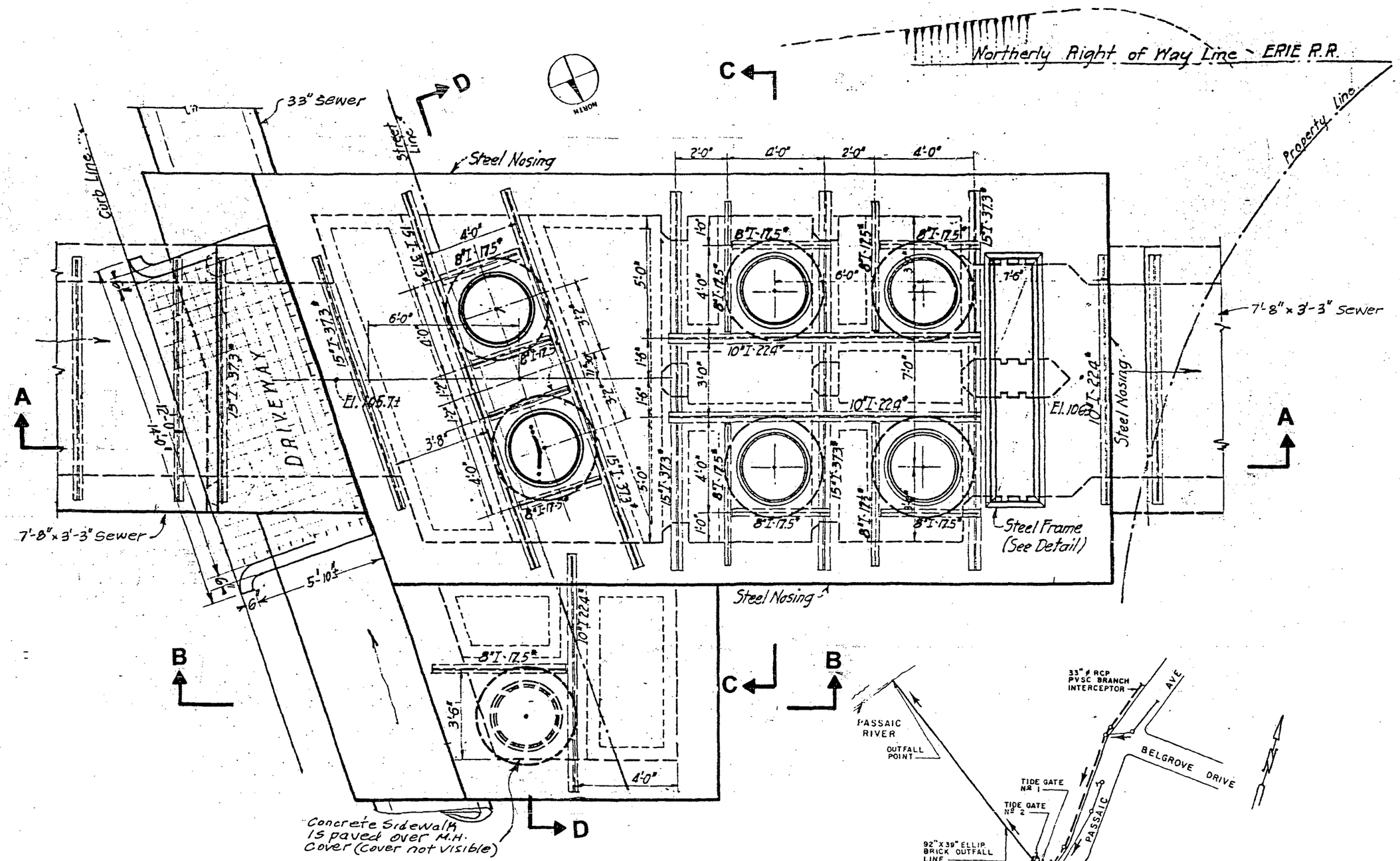

4 0 4
GRAPHIC SCALE IN FEET

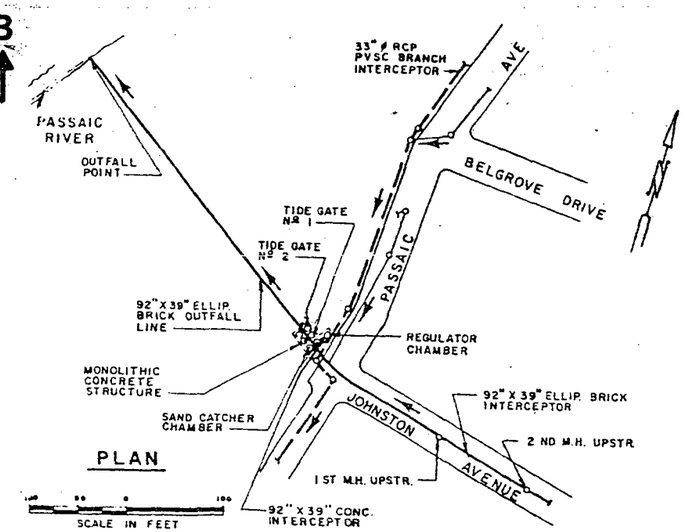

PLAN

CHARLES A. MANGANARO
CONSULTING ENGINEERS
A PROFESSIONAL CORPORATION

COURT PLAZA NORTH, 25 MAIN STREET
HACKENSACK, NJ 07601-7032

946280009

NUMBER 033
JOHNSTON AVENUE REGULATOR
KEARNY

PASSAIC VALLEY
SEWERAGE COMMISSIONERS

COMBINED SEWER SYSTEM
FACILITIES INVENTORY AND
ASSESSMENT ANALYSIS

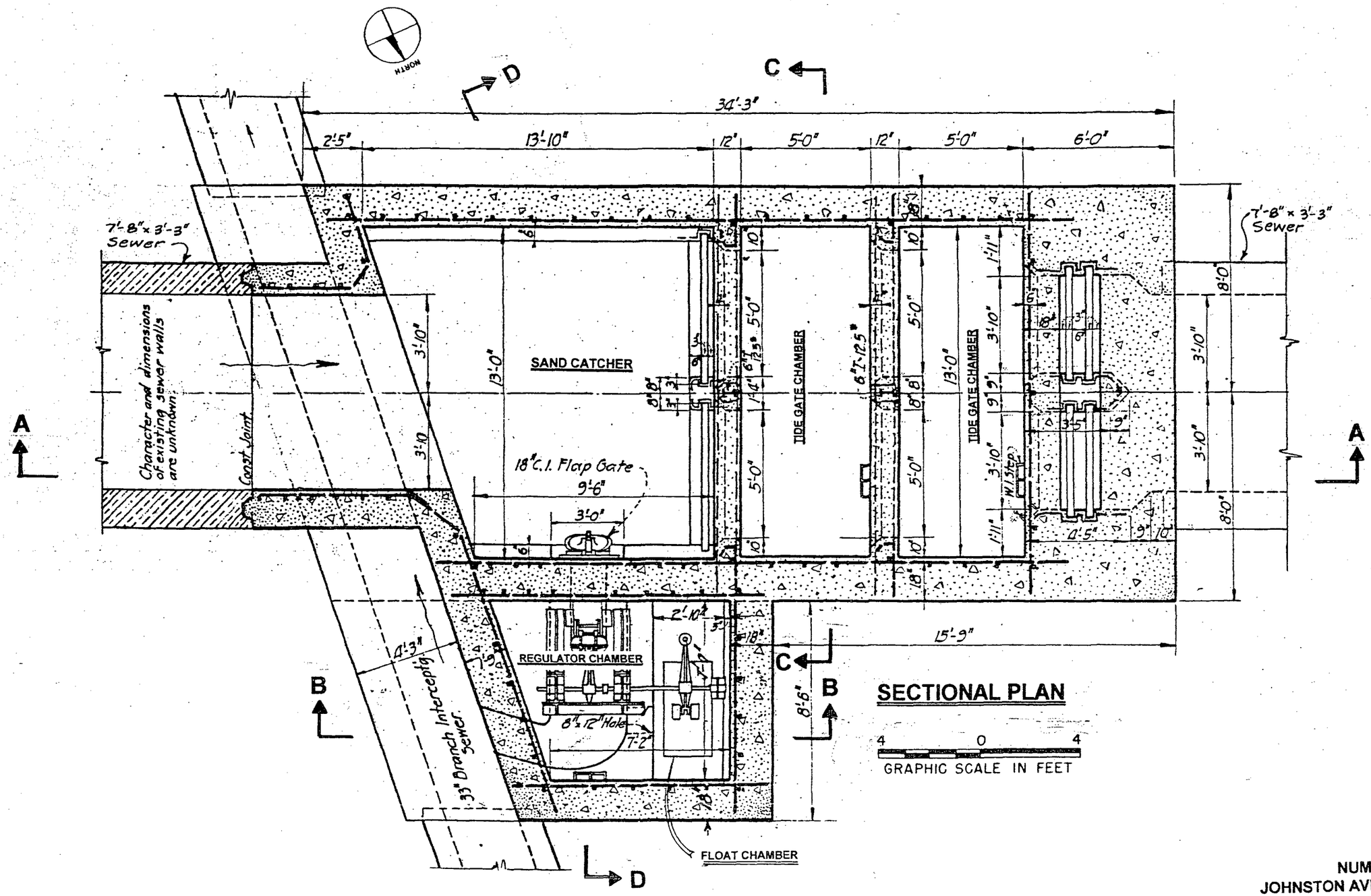

CHARLES A. MANGANARO
CONSULTING ENGINEERS
A PROFESSIONAL CORPORATION

COURT PLAZA NORTH, 25 MAIN STREET
HACKENSACK, NJ 07601-7032

946280010

NUMBER 033
JOHNSTON AVENUE REGULATOR
KEARNY

PASSAIC VALLEY
SEWERAGE COMMISSIONERS

COMBINED SEWER SYSTEM
FACILITIES INVENTORY AND
ASSESSMENT ANALYSIS

FIGURE 033-3

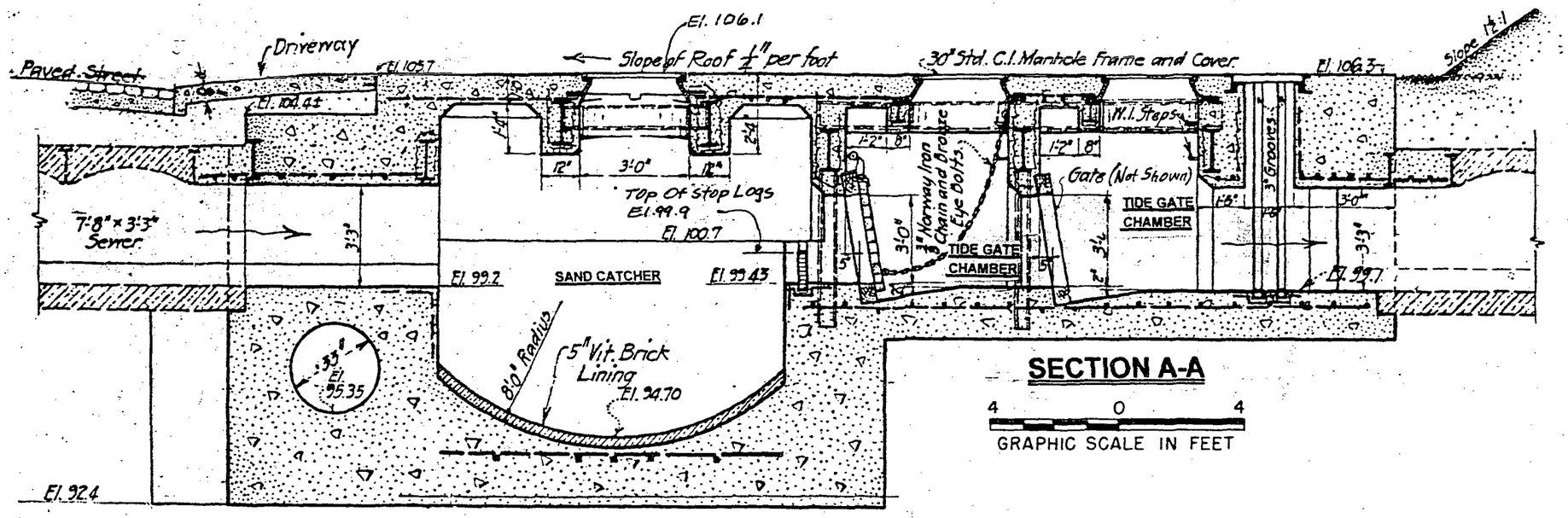

SECTION A-A

4 0 4
GRAPHIC SCALE IN FEET

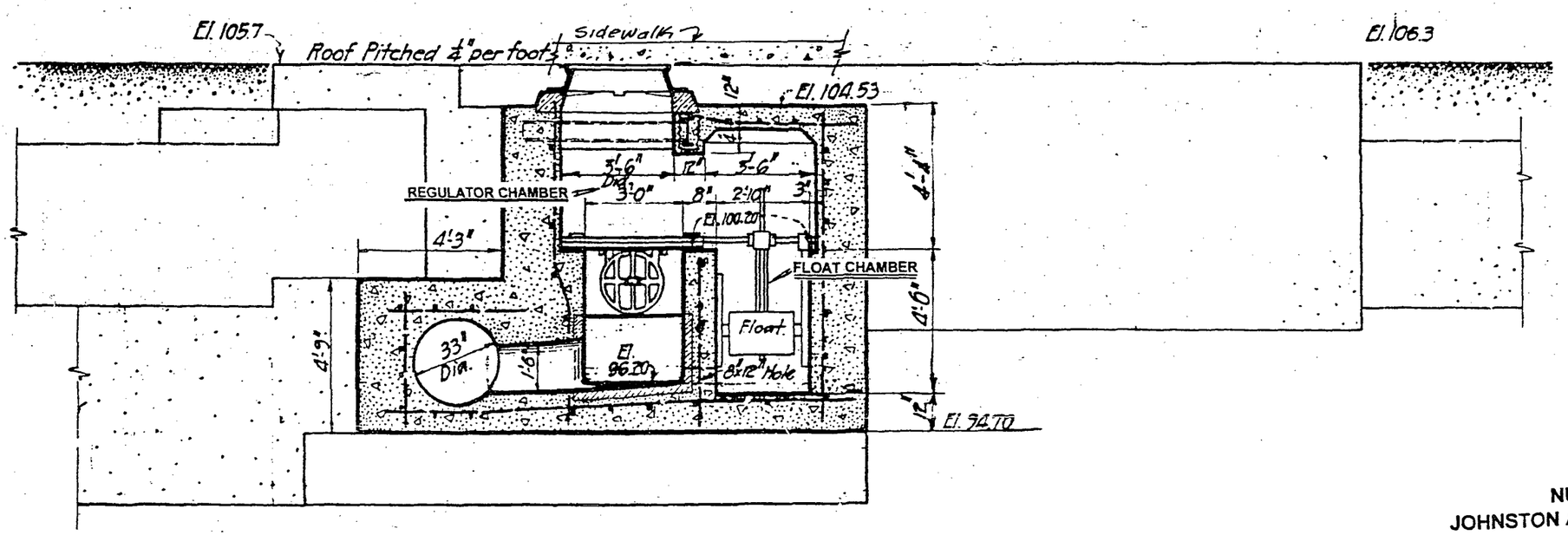

SECTION B-B

4 0 4
GRAPHIC SCALE IN FEET

NUMBER 033
JOHNSTON AVENUE REGULATOR
KEARNY

PASSAIC VALLEY
SEWERAGE COMMISSIONERS

COMBINED SEWER SYSTEM
FACILITIES INVENTORY AND
ASSESSMENT ANALYSIS

CHARLES A. MANGANARO
CONSULTING ENGINEERS
A PROFESSIONAL CORPORATION

COURT PLAZA NORTH, 25 MAIN STREET
HACKENSACK, NJ 07601-7032

946280011

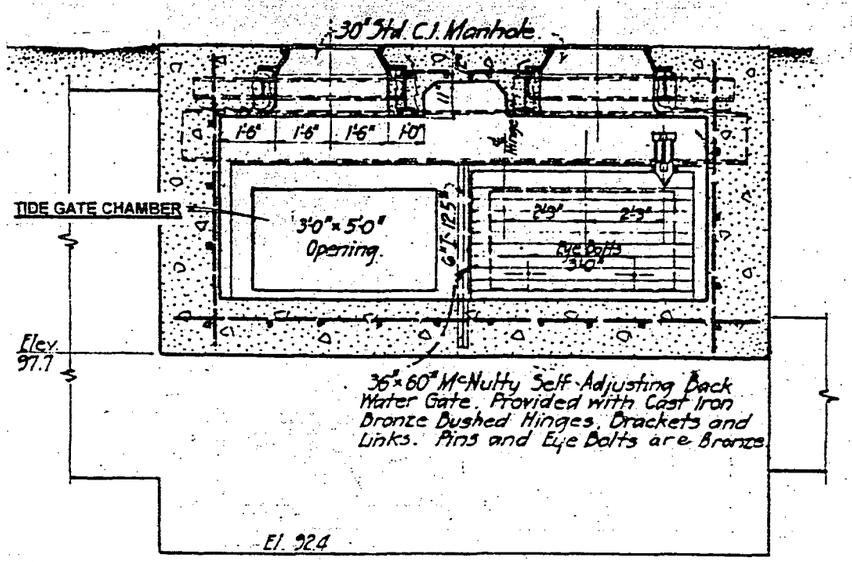

SECTION C-C

4 0 4
GRAPHIC SCALE IN FEET

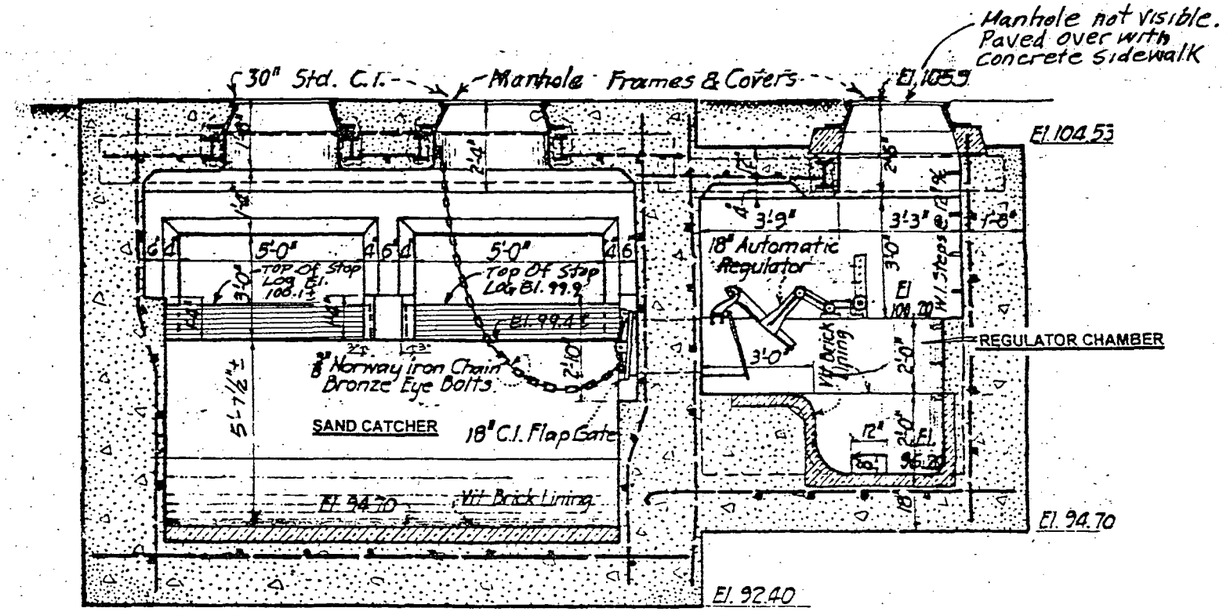

SECTION D-D

4 0 4
GRAPHIC SCALE IN FEET

CHARLES A. MANGANARO
CONSULTING ENGINEERS
A PROFESSIONAL CORPORATION

COURT PLAZA NORTH, 25 MAIN STREET
HACKENSACK, NJ 07601-7032

946280012

NUMBER 033
JOHNSTON AVENUE REGULATOR
KEARNY

PASSAIC VALLEY
SEWERAGE COMMISSIONERS

COMBINED SEWER SYSTEM
FACILITIES INVENTORY AND
ASSESSMENT ANALYSIS

FIGURE 035-1

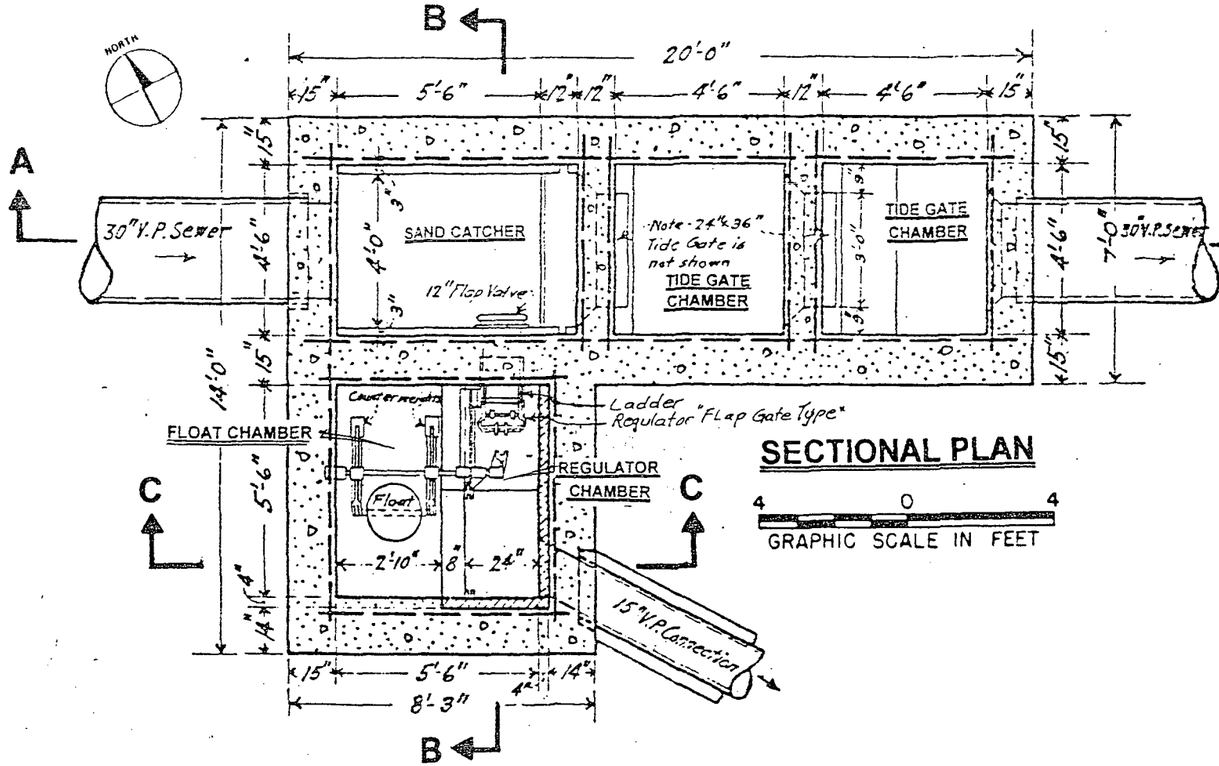

SECTIONAL PLAN

4 0 4
GRAPHIC SCALE IN FEET

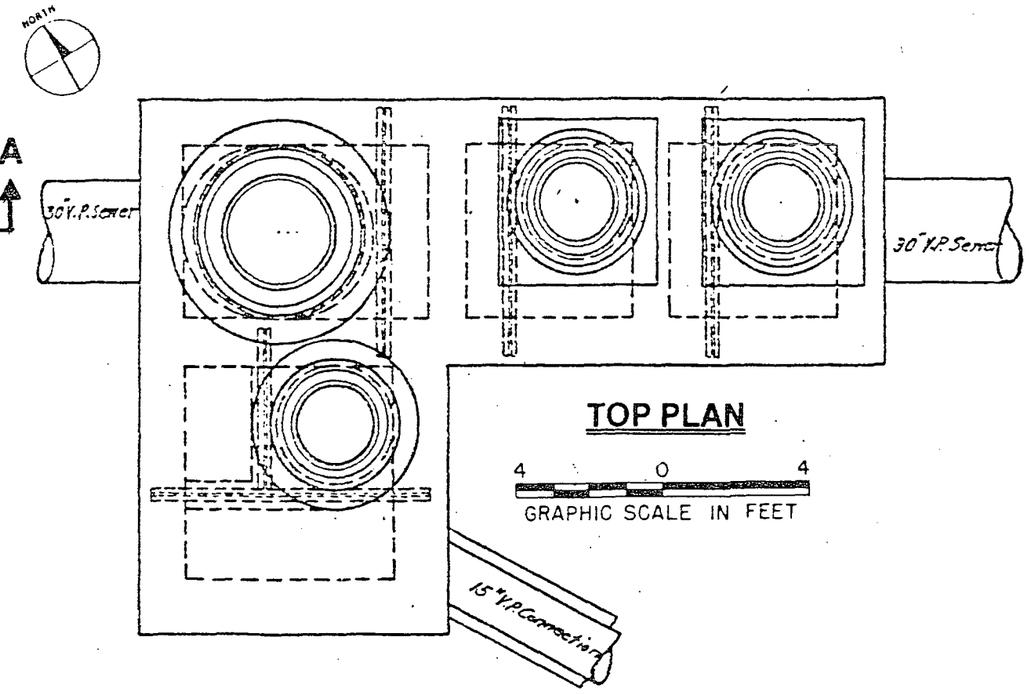

TOP PLAN

4 0 4
GRAPHIC SCALE IN FEET

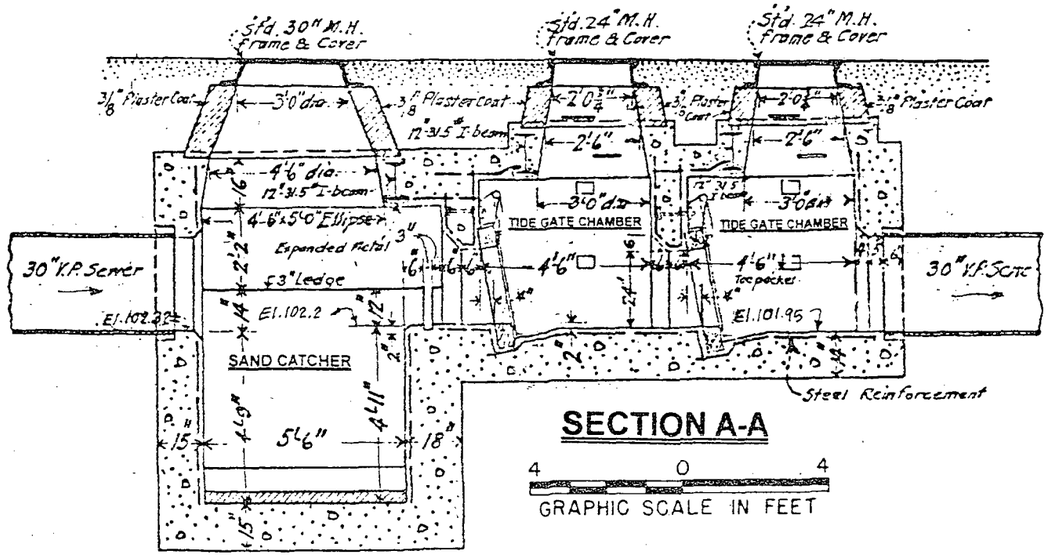

SECTION A-A

4 0 4
GRAPHIC SCALE IN FEET

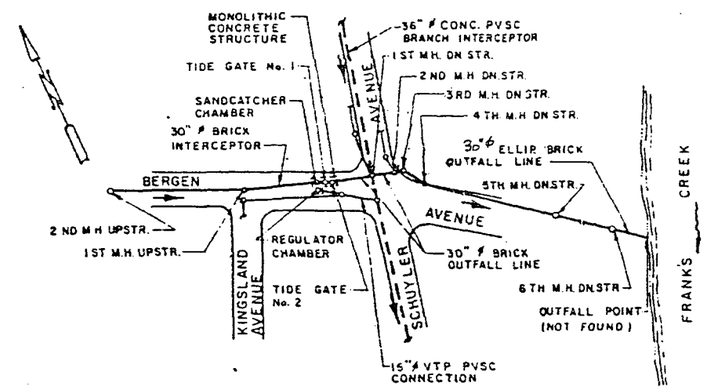

PLAN

SCALE IN FEET

CHARLES A. MANGANARO
CONSULTING ENGINEERS
A PROFESSIONAL CORPORATION

COURT PLAZA NORTH, 25 MAIN STREET
HACKENSACK, NJ 07601-7032

NUMBER 035
BERGEN AVENUE REGULATOR
KEARNY

PASSAIC VALLEY
SEWERAGE COMMISSIONERS

COMBINED SEWER SYSTEM
FACILITIES INVENTORY AND
ASSESSMENT ANALYSIS

946280013

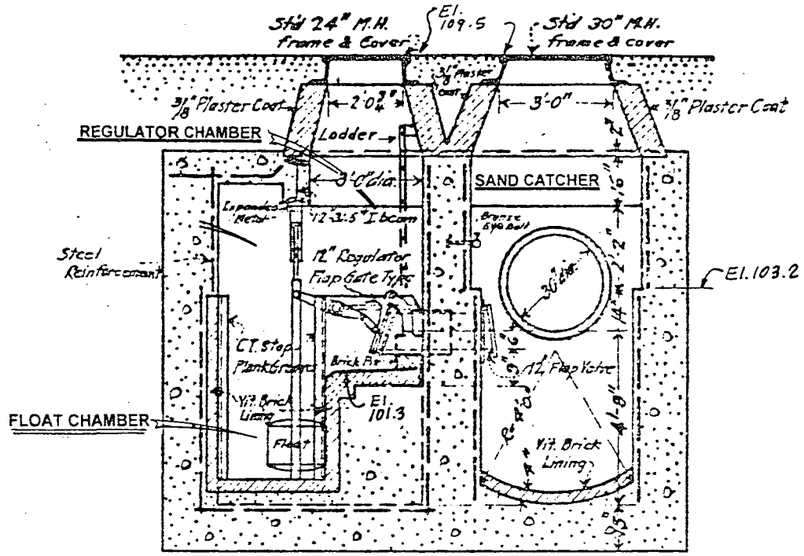

SECTION B-B

4 0 4
GRAPHIC SCALE IN FEET

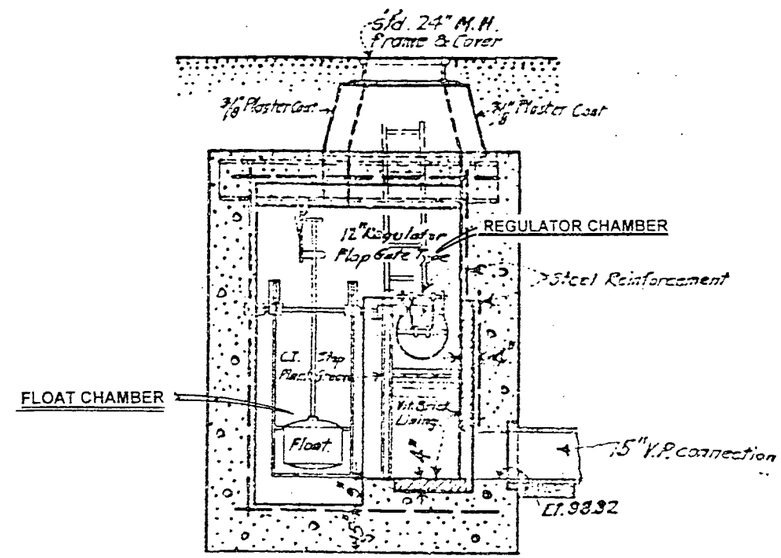

SECTION C-C

4 0 4
GRAPHIC SCALE IN FEET

CHARLES A. MANGANARO
CONSULTING ENGINEERS
A PROFESSIONAL CORPORATION

COURT PLAZA NORTH, 25 MAIN STREET
HACKENSACK, NJ 07601-7032

946280014

NUMBER 035
BERGEN AVENUE REGULATOR
KEARNY

PASSAIC VALLEY
SEWERAGE COMMISSIONERS

COMBINED SEWER SYSTEM
FACILITIES INVENTORY AND
ASSESSMENT ANALYSIS

FIGURE 038-1

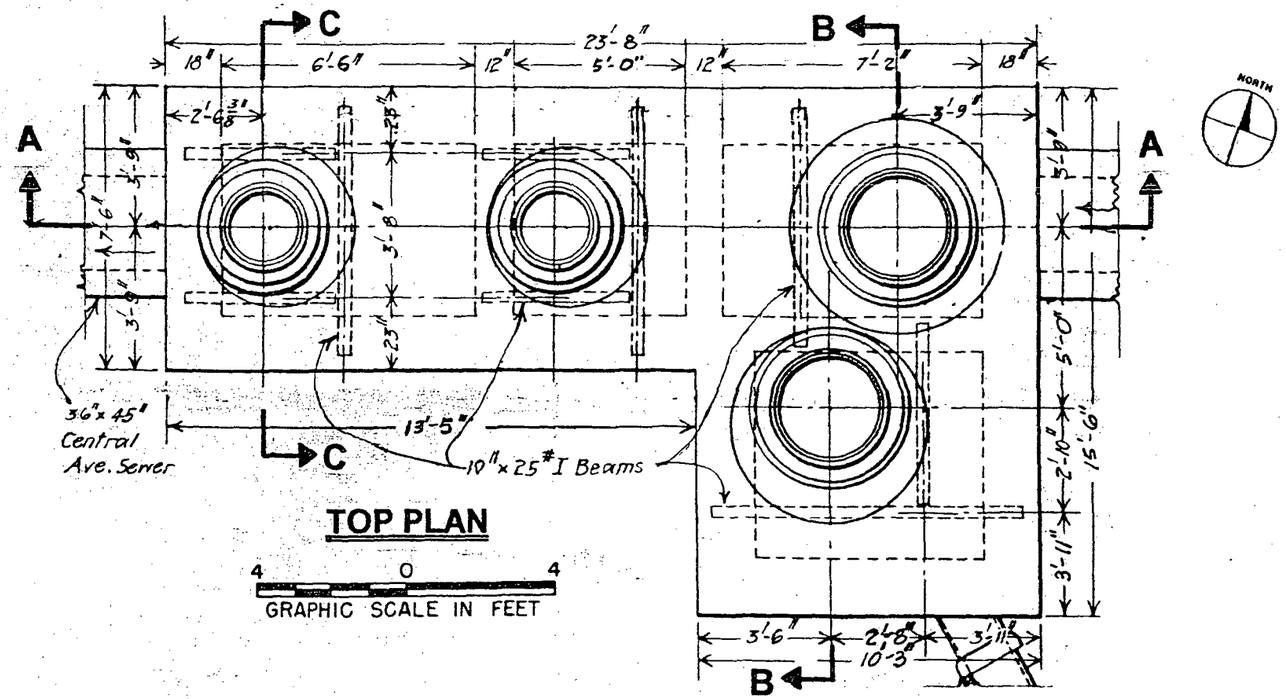

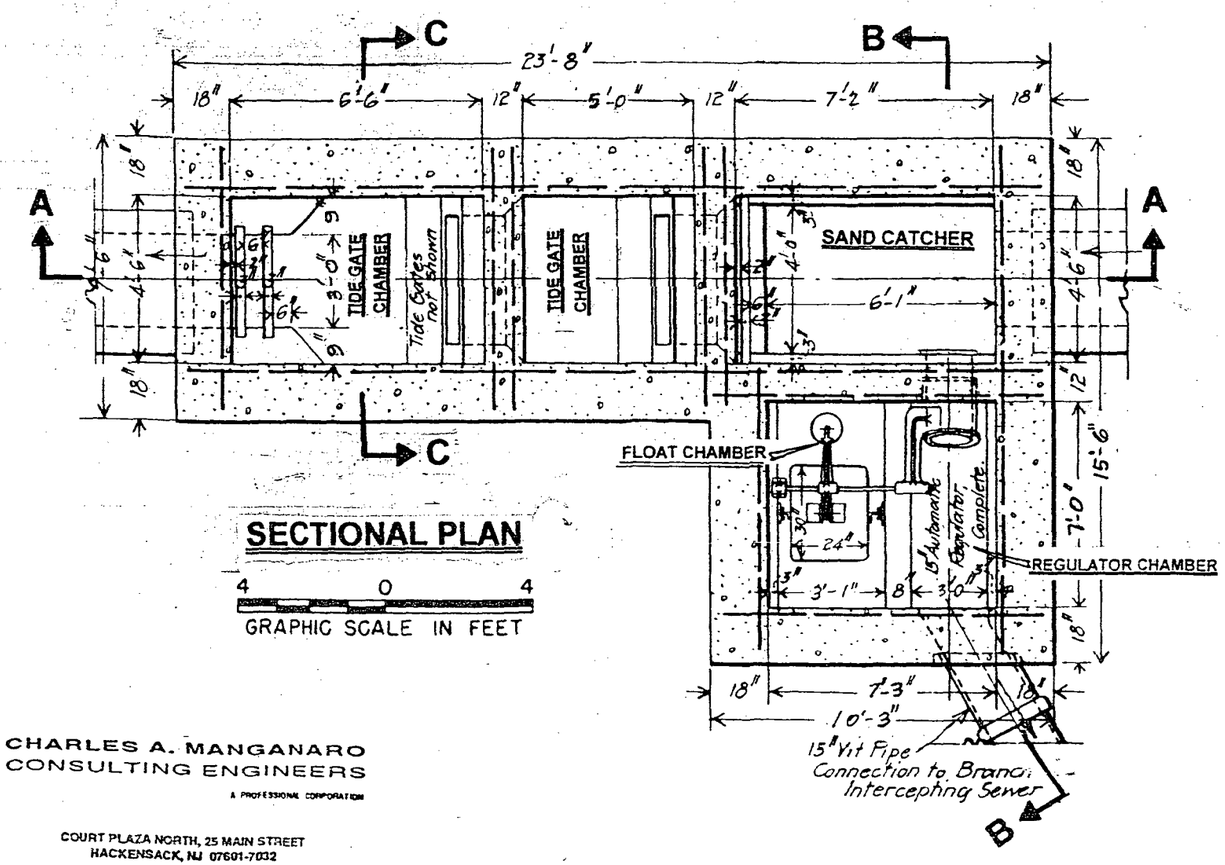

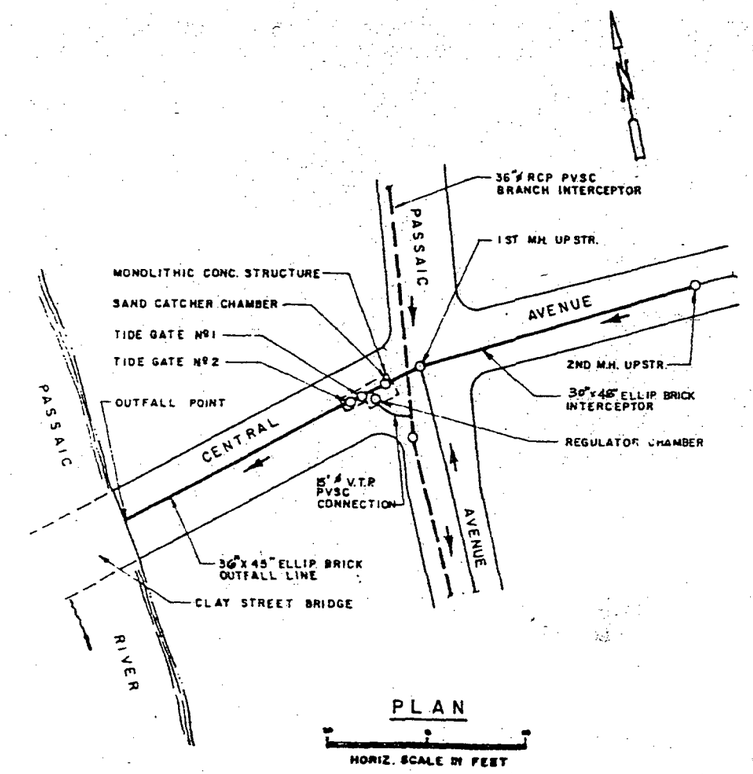

CHARLES A. MANGANARO
CONSULTING ENGINEERS
A PROFESSIONAL CORPORATION

COURT PLAZA NORTH, 25 MAIN STREET
HACKENSACK, NJ 07601-7032

946280015

NUMBER 038
CENTRAL AVENUE REGULATOR
E. NEWARK

PASSAIC VALLEY
SEWERAGE COMMISSIONERS

COMBINED SEWER SYSTEM
FACILITIES INVENTORY AND
ASSESSMENT ANALYSIS

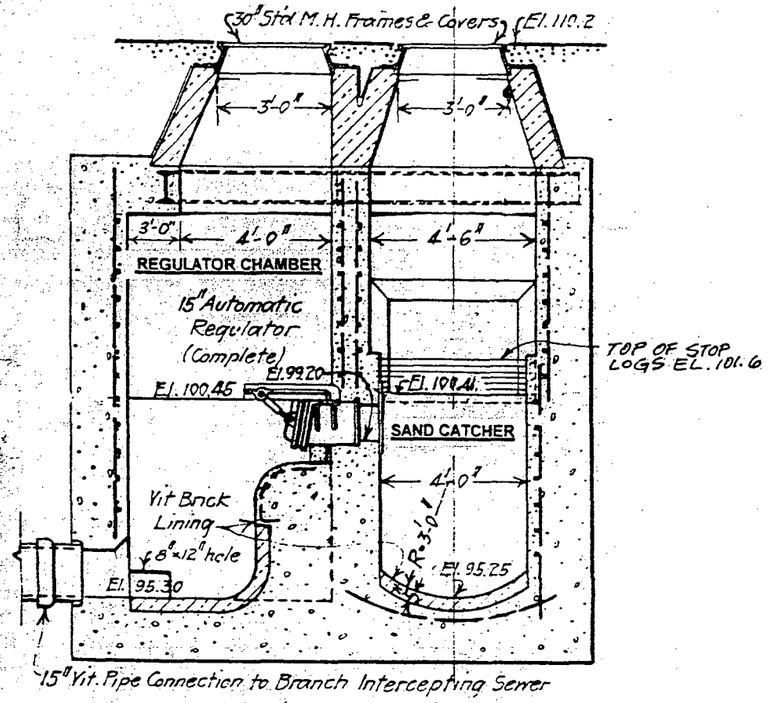

SECTION B-B

4 0 4
GRAPHIC SCALE IN FEET

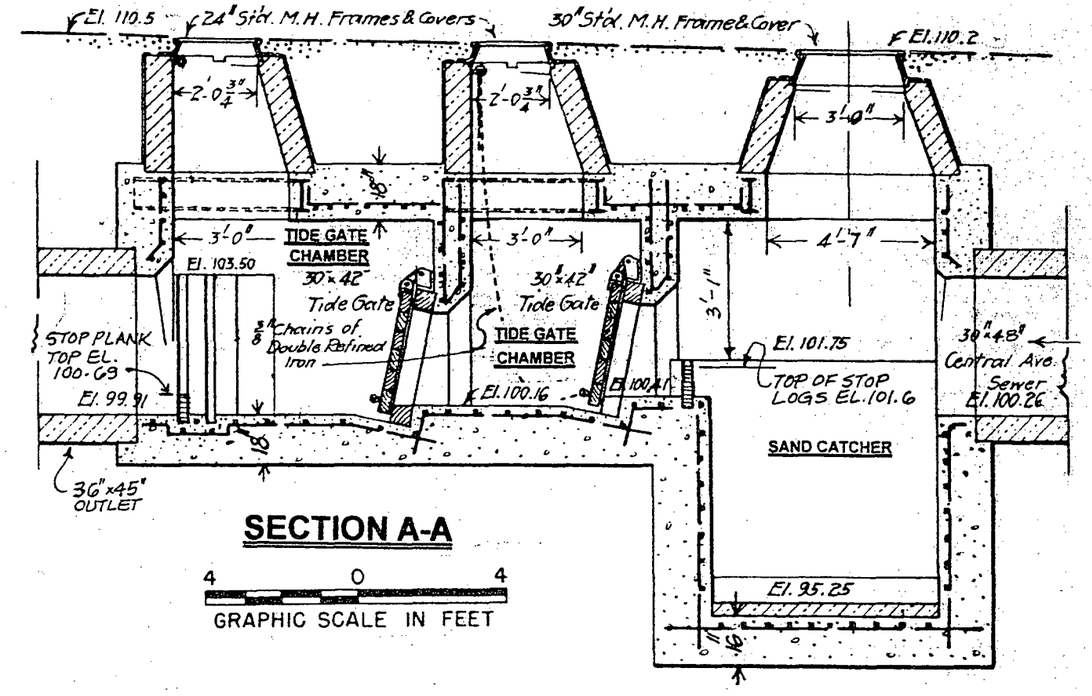

SECTION A-A

4 0 4
GRAPHIC SCALE IN FEET

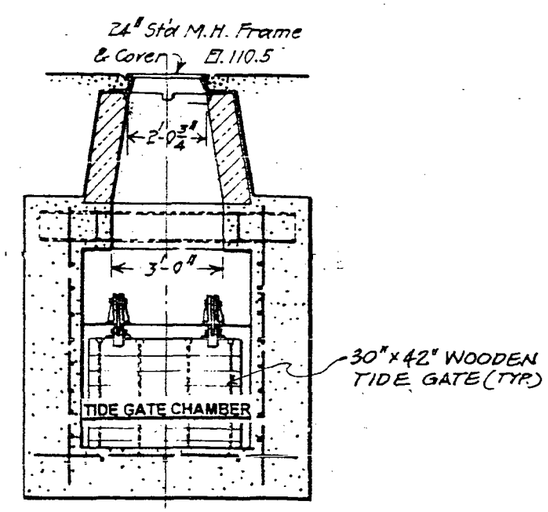

SECTION C-C

4 0 4
GRAPHIC SCALE IN FEET

CHARLES A. MANGANARO
CONSULTING ENGINEERS
A PROFESSIONAL CORPORATION

COURT PLAZA NORTH, 25 MAIN STREET
HACKENSACK, NJ 07601-7032

946280016

NUMBER 038
CENTRAL AVENUE REGULATOR
E. NEWARK

PASSAIC VALLEY
SEWERAGE COMMISSIONERS

COMBINED SEWER SYSTEM
FACILITIES INVENTORY AND
ASSESSMENT ANALYSIS

FIGURE 039-1

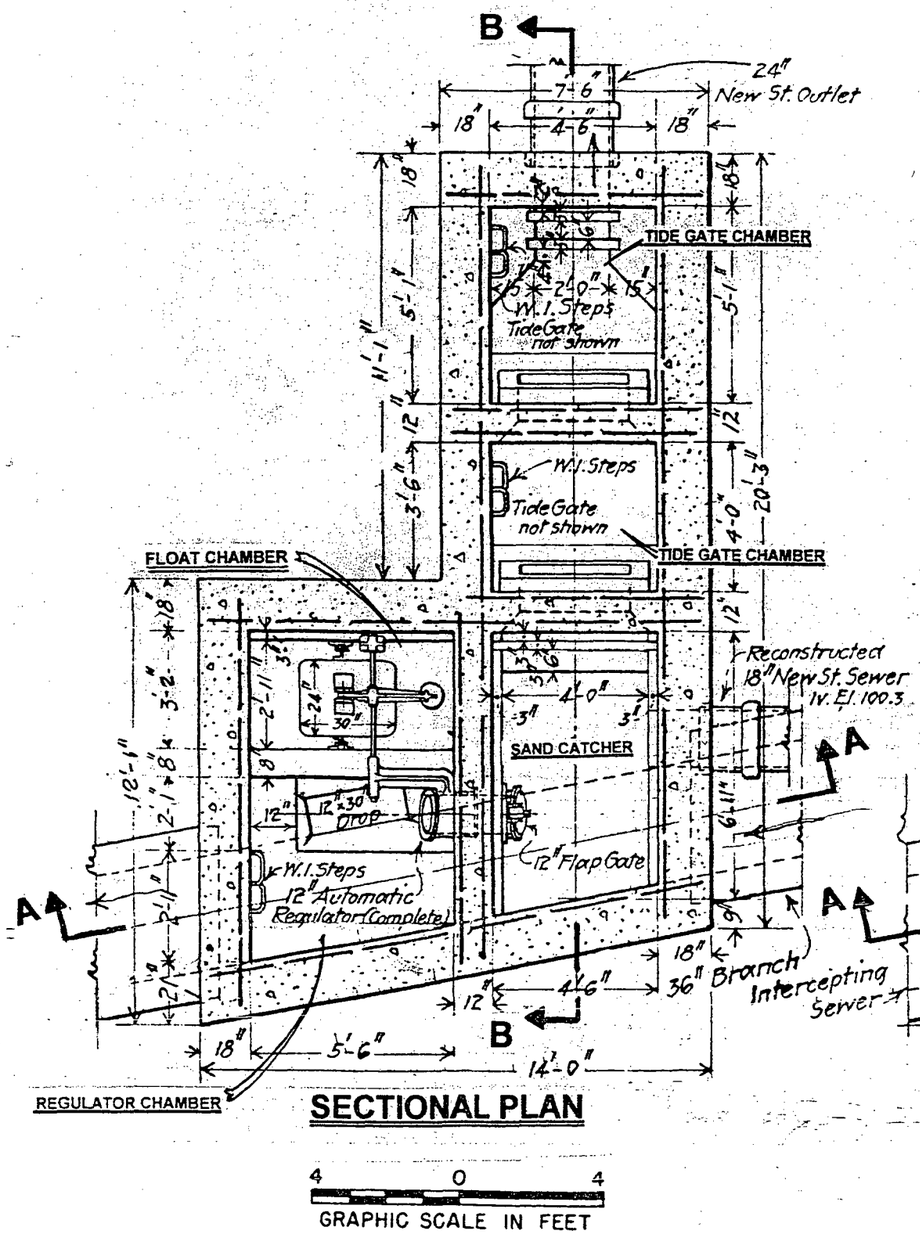

SECTIONAL PLAN

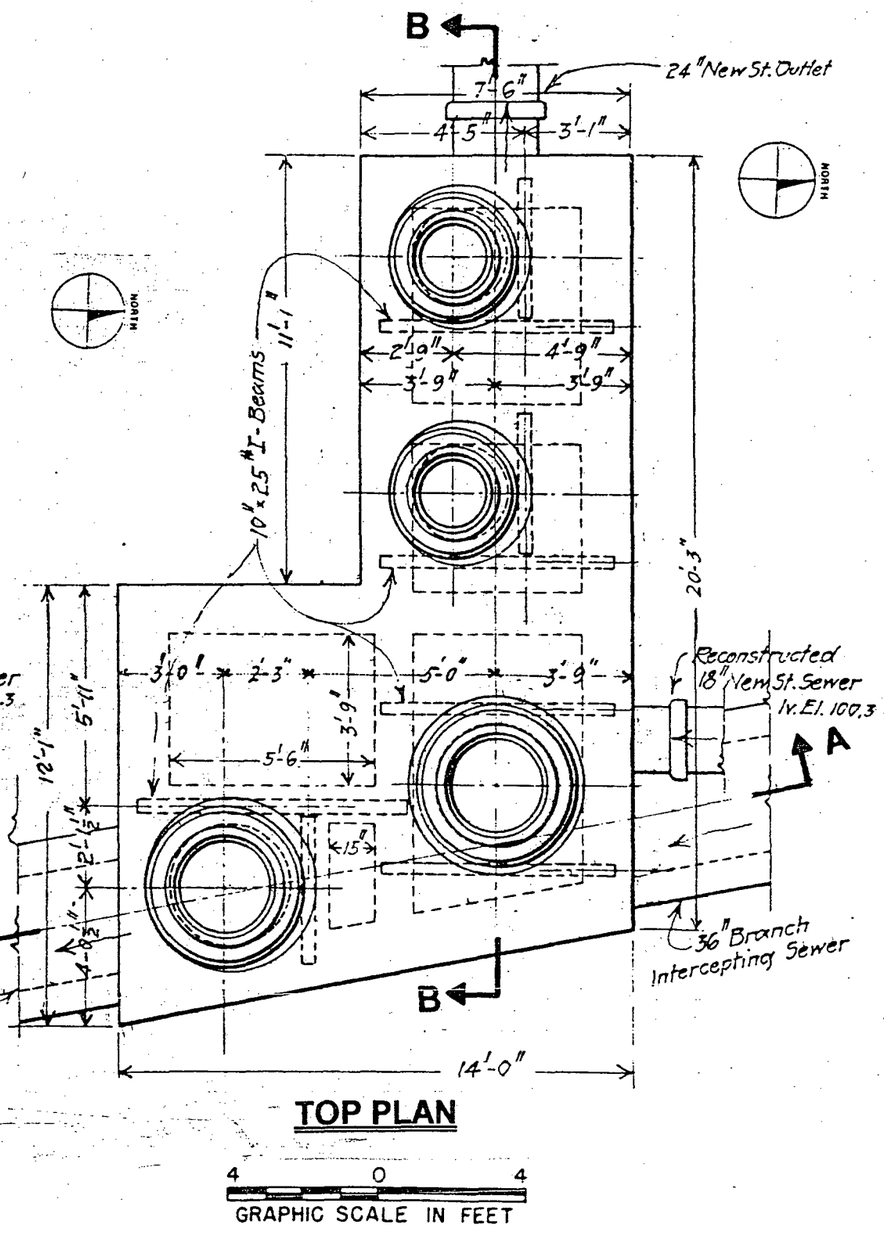

TOP PLAN

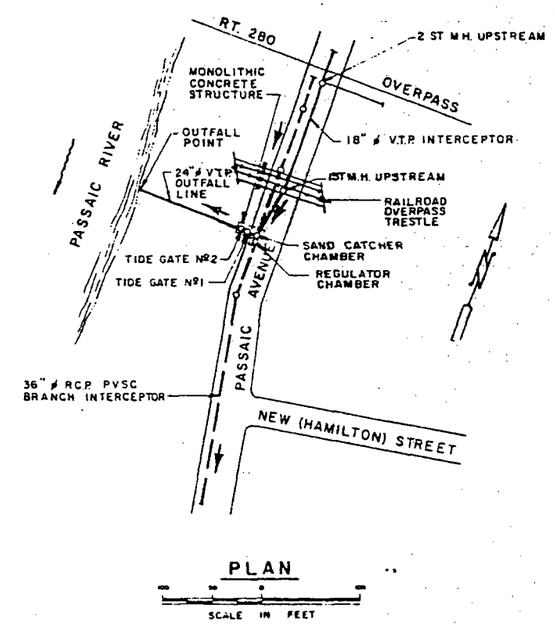

NUMBER 039
NEW STREET REGULATOR
HARRISON

PASSAIC VALLEY
SEWERAGE COMMISSIONERS

COMBINED SEWER SYSTEM
FACILITIES INVENTORY AND
ASSESSMENT ANALYSIS

CHARLES A. MANGANARO
CONSULTING ENGINEERS
A PROFESSIONAL CORPORATION

COURT PLAZA NORTH, 25 MAIN STREET
HACKENSACK, NJ 07601-7032

946280017

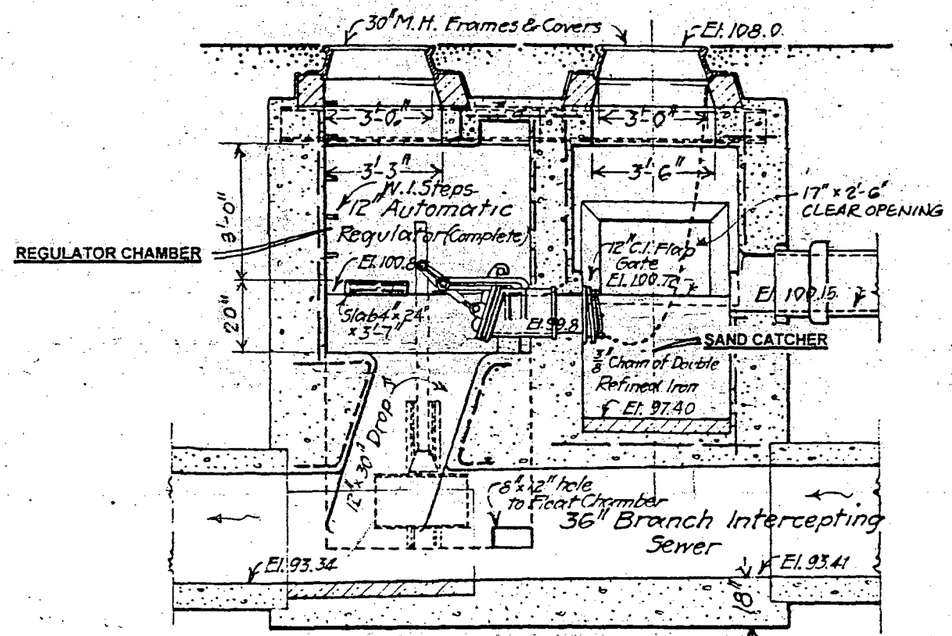

SECTION A-A

4 0 4
GRAPHIC SCALE IN FEET

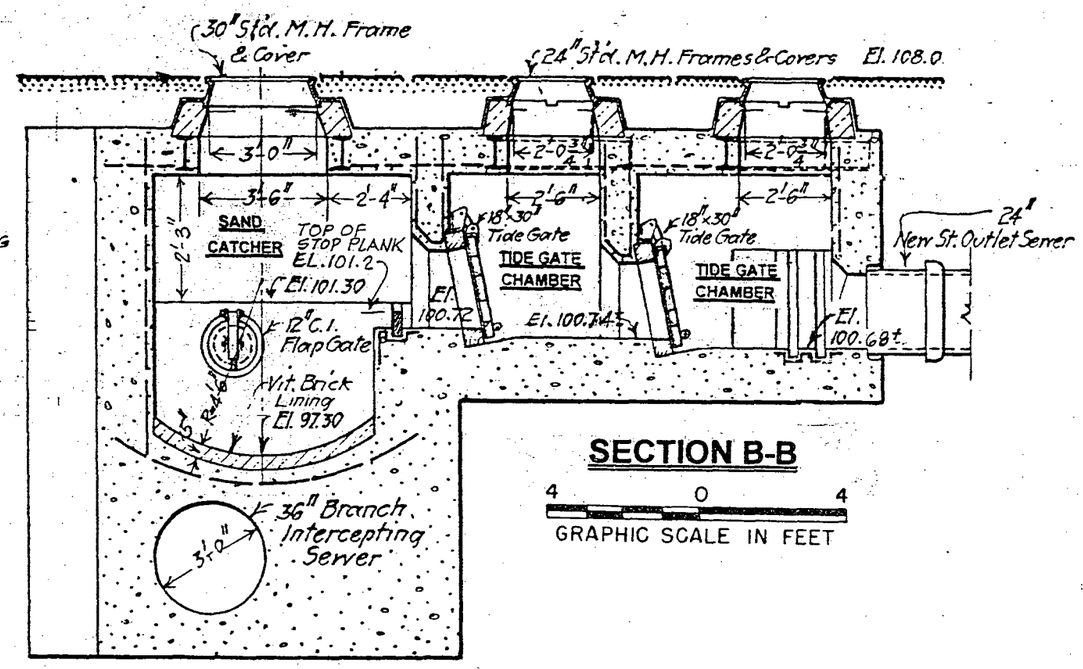

SECTION B-B

4 0 4
GRAPHIC SCALE IN FEET

CHARLES A. MANGANARO
CONSULTING ENGINEERS
A PROFESSIONAL CORPORATION

COURT PLAZA NORTH, 25 MAIN STREET
HACKENSACK, NJ 07601-7032

946280018

NUMBER 039
NEW STREET REGULATOR
HARRISON

PASSAIC VALLEY
SEWERAGE COMMISSIONERS

COMBINED SEWER SYSTEM
FACILITIES INVENTORY AND
ASSESSMENT ANALYSIS

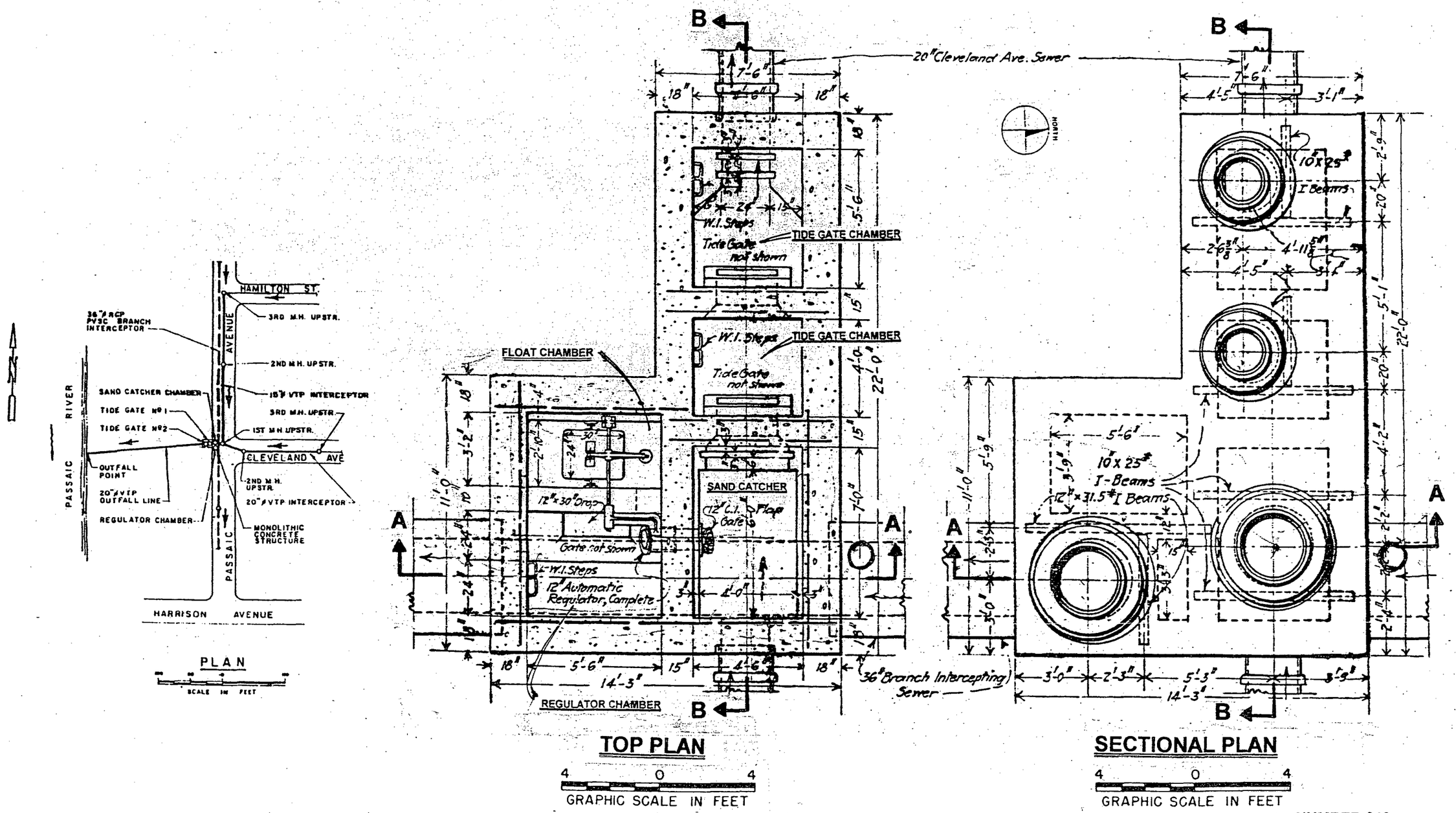

NUMBER 040
CLEVELAND STREET REGULATOR
HARRISON

PASSAIC VALLEY
SEWERAGE COMMISSIONERS

COMBINED SEWER SYSTEM
FACILITIES INVENTORY AND
ASSESSMENT ANALYSIS

CHARLES A. MANGANARO
CONSULTING ENGINEERS
A PROFESSIONAL CORPORATION

COURT PLAZA NORTH, 25 MAIN STREET
HACKENSACK, NJ 07601-7032

946280019

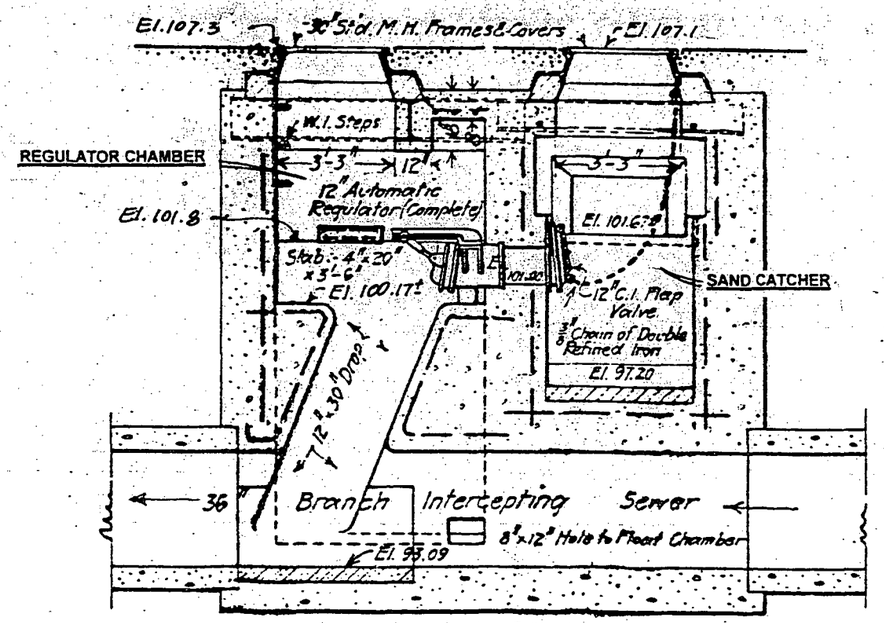

SECTION A-A

4 0 4
GRAPHIC SCALE IN FEET

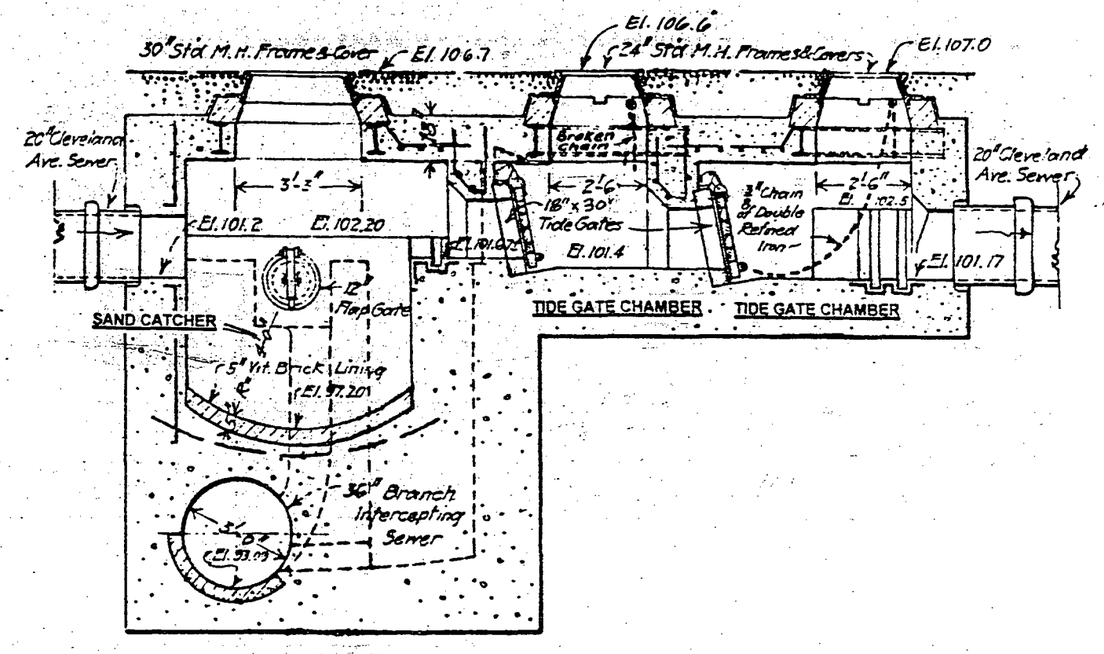

SECTION B-B

4 0 4
GRAPHIC SCALE IN FEET

CHARLES A. MANGANARO
CONSULTING ENGINEERS
A PROFESSIONAL CORPORATION

COURT PLAZA NORTH, 25 MAIN STREET
HACKENSACK, NJ 07601-7032

946280020

NUMBER 040
CLEVELAND STREET REGULATOR
HARRISON

PASSAIC VALLEY
SEWERAGE COMMISSIONERS

COMBINED SEWER SYSTEM
FACILITIES INVENTORY AND
ASSESSMENT ANALYSIS

FIGURE 041-1

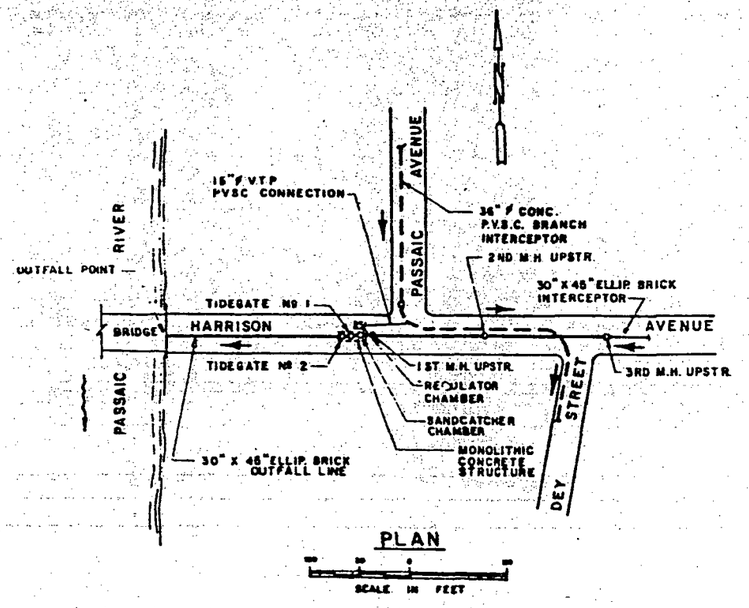

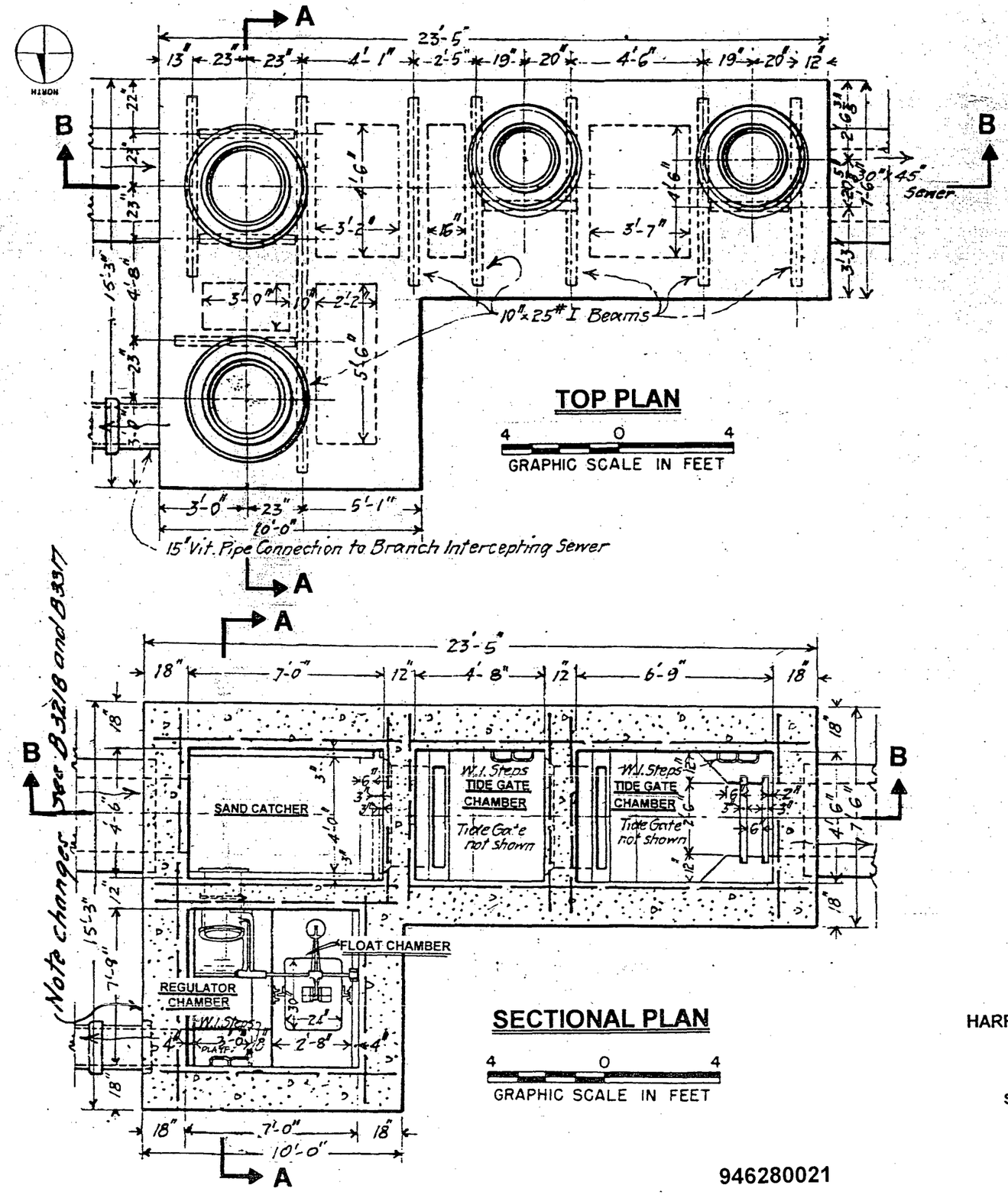

CHARLES A. MANGANARO
CONSULTING ENGINEERS
A PROFESSIONAL CORPORATION

COURT PLAZA NORTH, 25 MAIN STREET
HACKENSACK, NJ 07601-7032

946280021

NUMBER 041
HARRISON AVENUE REGULATOR
HARRISON

PASSAIC VALLEY
SEWERAGE COMMISSIONERS

COMBINED SEWER SYSTEM
FACILITIES INVENTORY AND
ASSESSMENT ANALYSIS

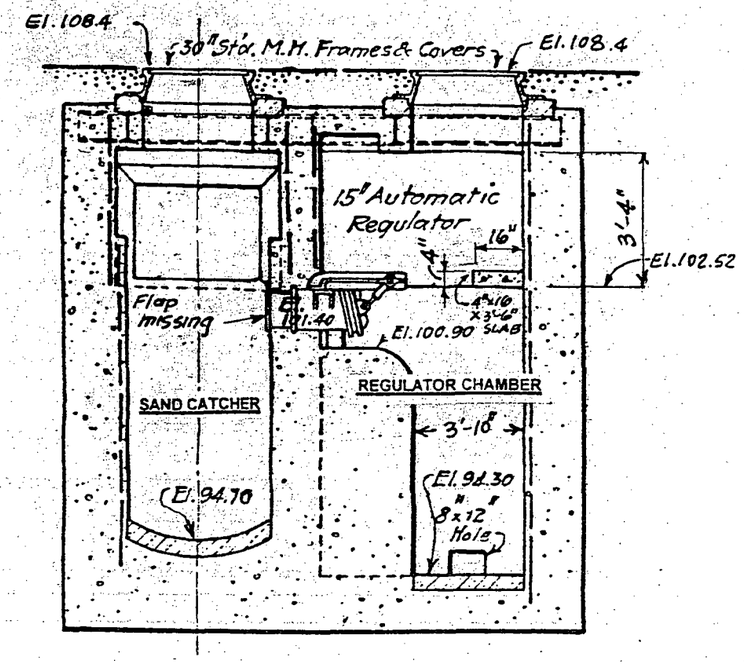

SECTION A-A

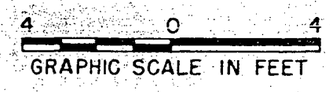

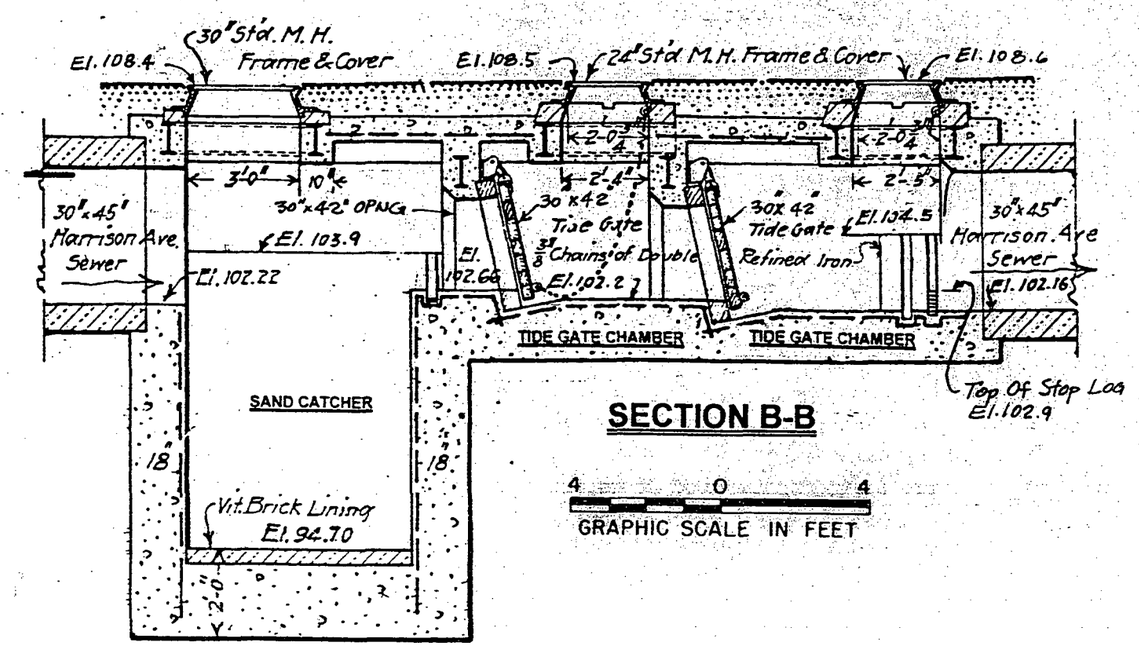

SECTION B-B

CHARLES A. MANGANARO
CONSULTING ENGINEERS
A PROFESSIONAL CORPORATION

COURT PLAZA NORTH, 25 MAIN STREET
HACKENSACK, NJ 07601-7032

946280022

NUMBER 041
HARRISON AVENUE REGULATOR
HARRISON

PASSAIC VALLEY
SEWERAGE COMMISSIONERS

COMBINED SEWER SYSTEM
FACILITIES INVENTORY AND
ASSESSMENT ANALYSIS

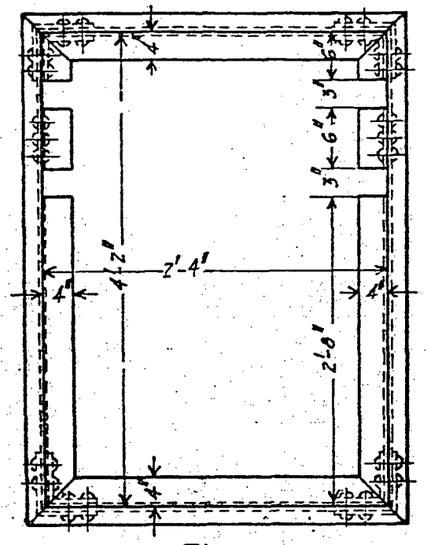

Plan
MANHOLE FRAME
Make 1

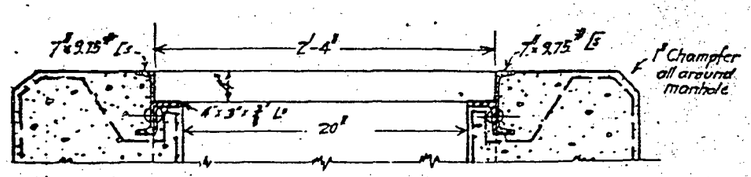

Section

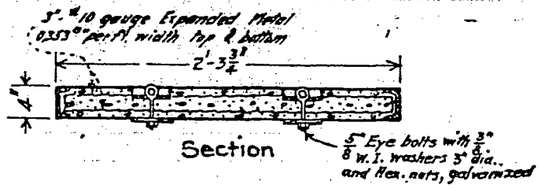

Section

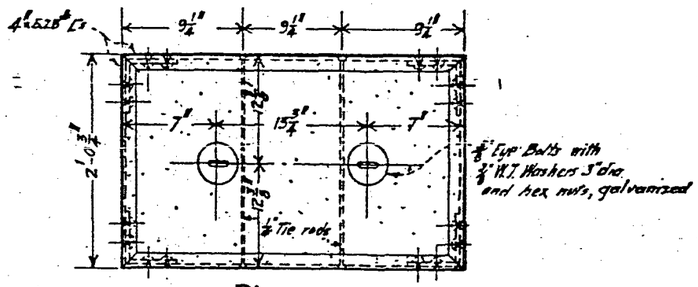

Plan
MANHOLE COVER
Make 2

1 0 1 2
GRAPHIC SCALE IN FEET

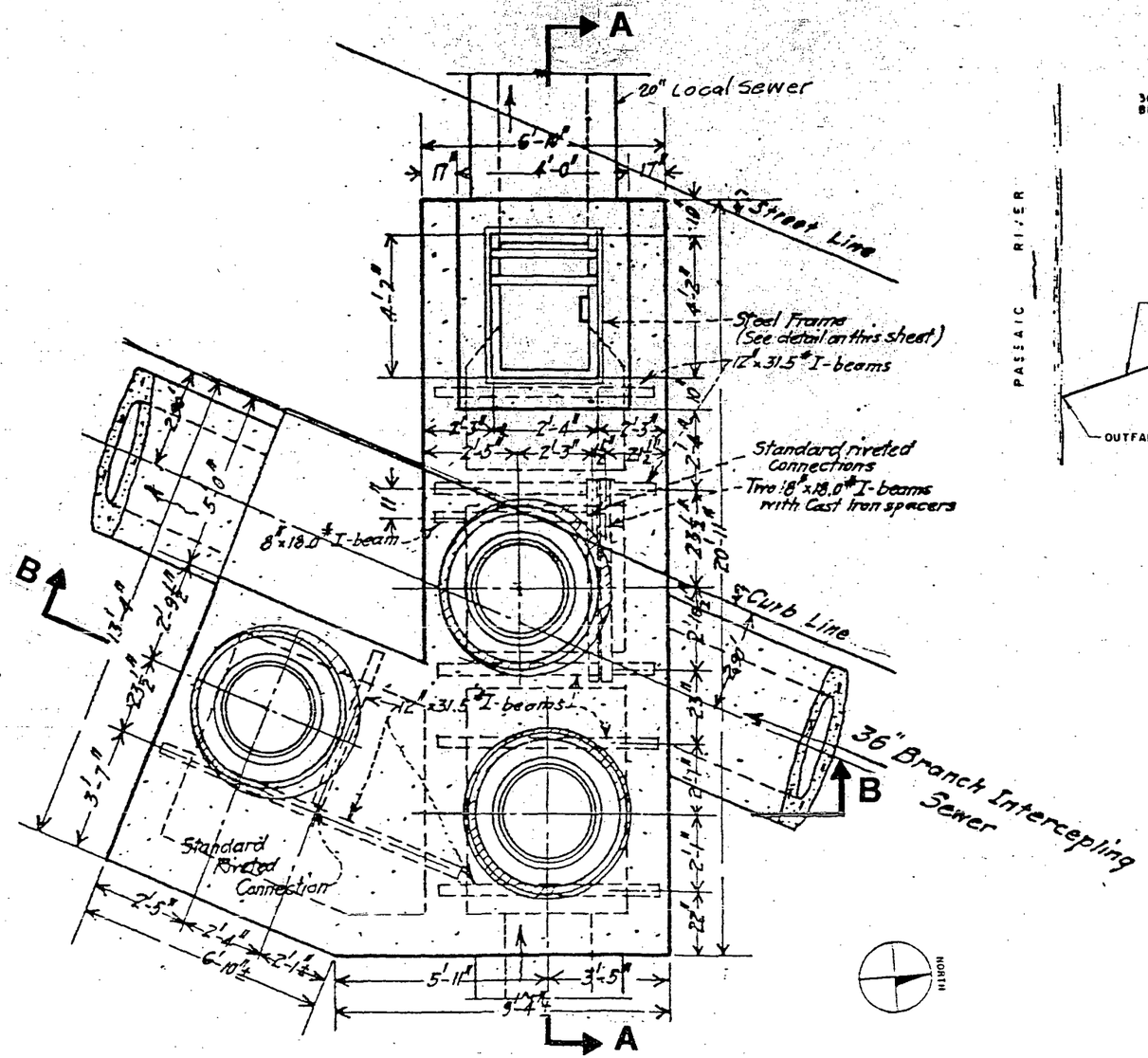

TOP PLAN

4 0 4
GRAPHIC SCALE IN FEET

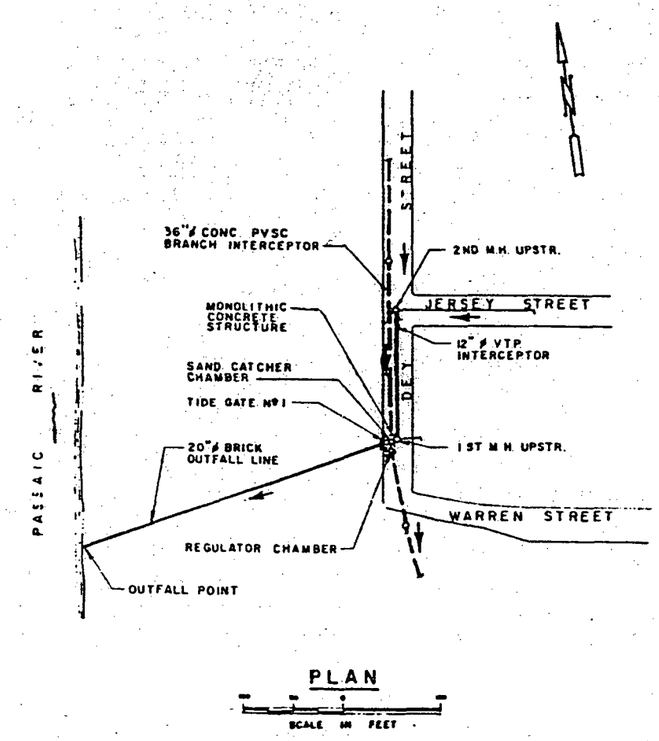

PLAN

SCALE IN FEET

CHARLES A. MANGANARO
CONSULTING ENGINEERS
A PROFESSIONAL CORPORATION

COURT PLAZA NORTH, 25 MAIN STREET
HACKENSACK, NJ 07601-7032

946280023

NUMBER 042
DEY STREET REGULATOR
HARRISON

PASSAIC VALLEY
SEWERAGE COMMISSIONERS

COMBINED SEWER SYSTEM
FACILITIES INVENTORY AND
ASSESSMENT ANALYSIS

FIGURE 042-2

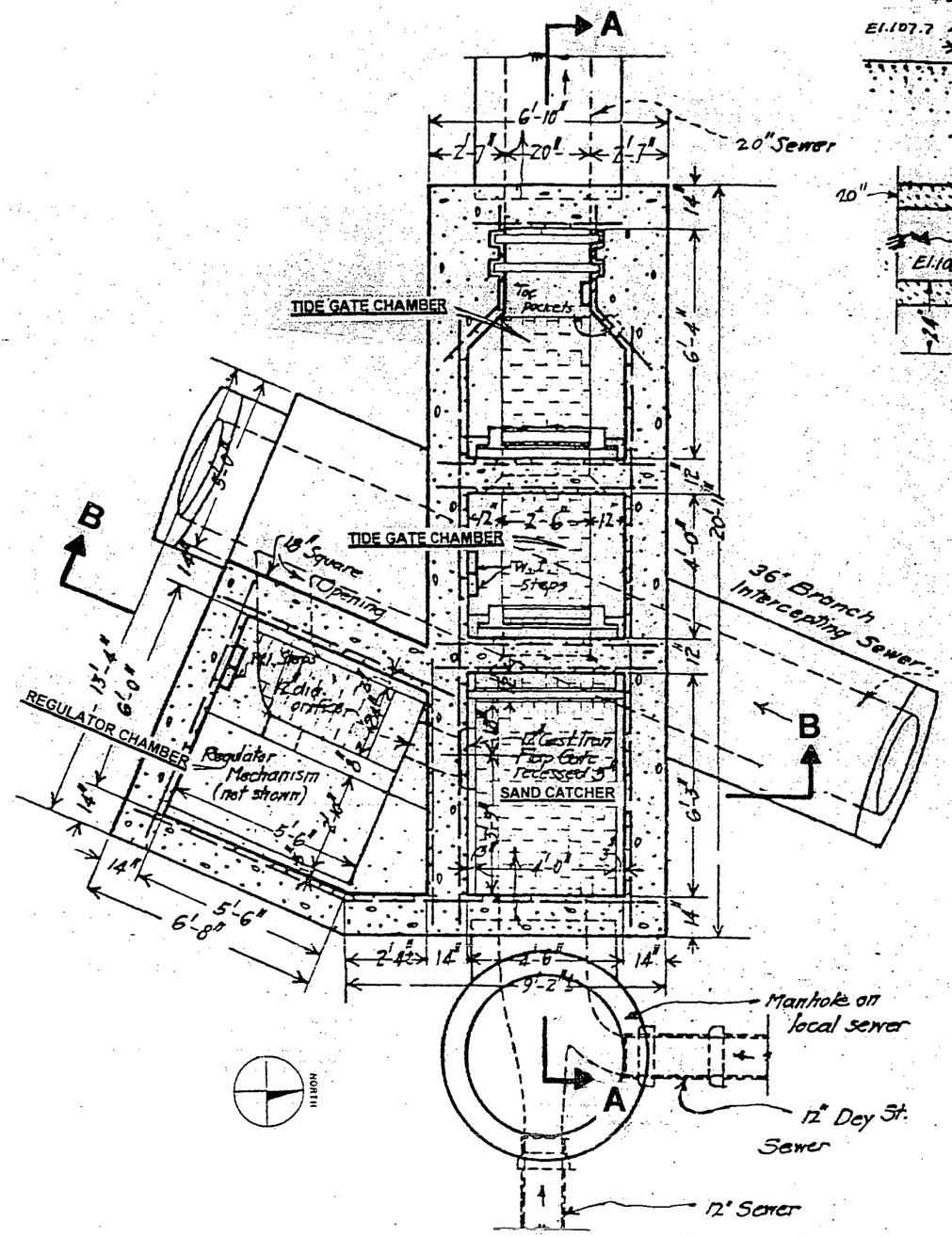

SECTIONAL PLAN

4 0 4
GRAPHIC SCALE IN FEET

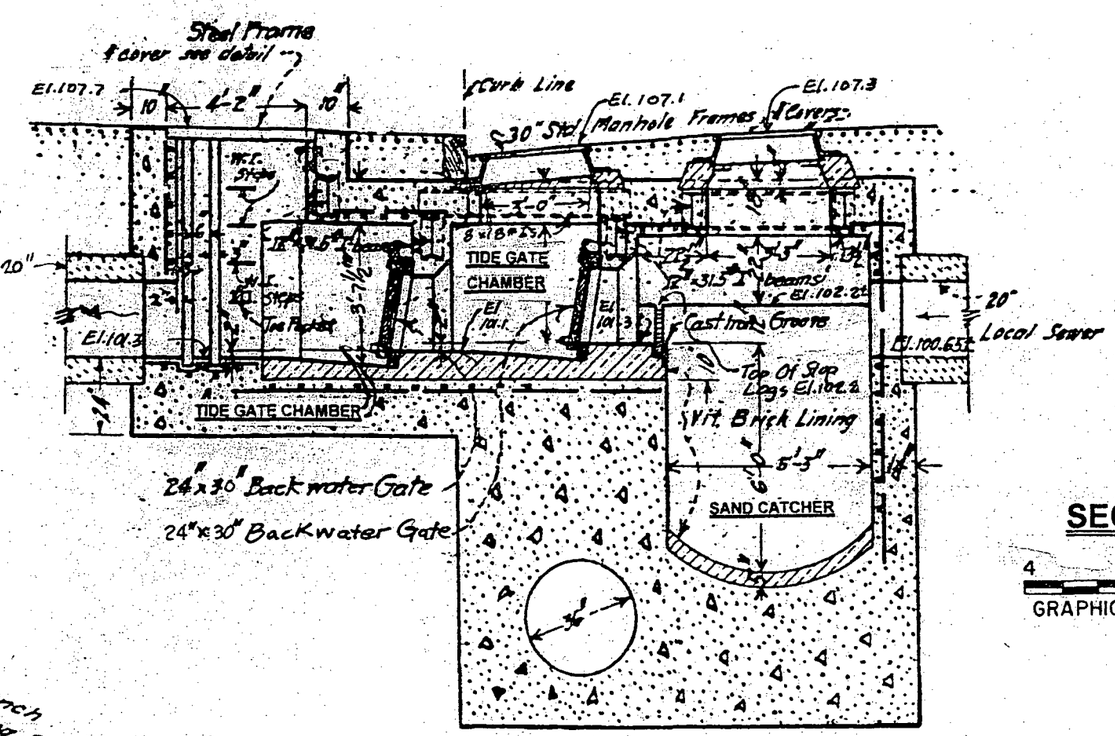

SECTION A-A

4 0 4
GRAPHIC SCALE IN FEET

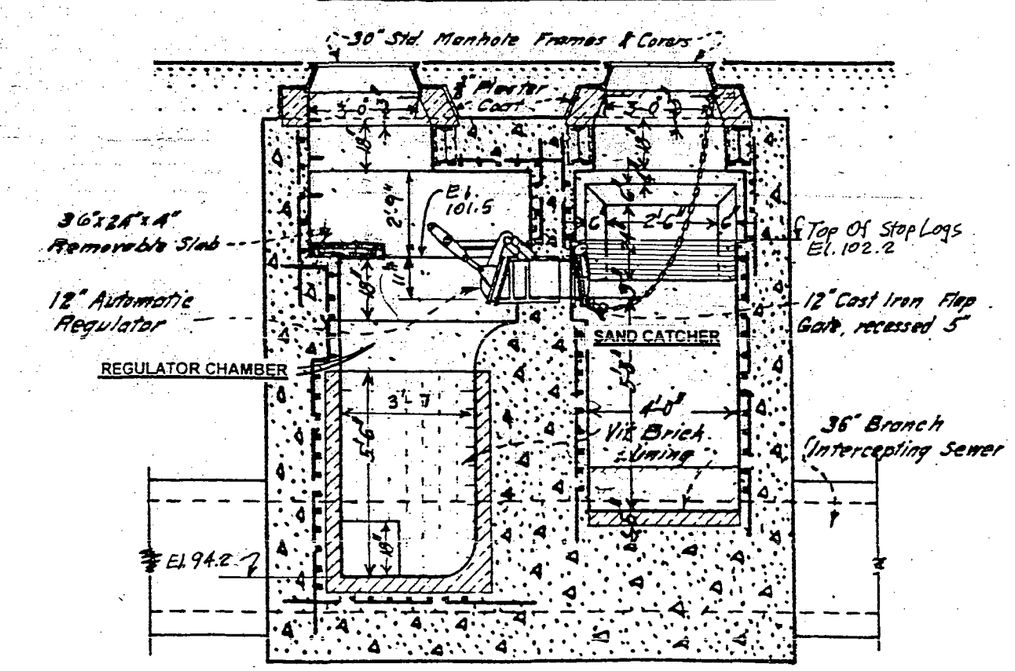

SECTION B-B

4 0 4
GRAPHIC SCALE IN FEET

CHARLES A. MANGANARO
CONSULTING ENGINEERS
A PROFESSIONAL CORPORATION

COURT PLAZA NORTH, 25 MAIN STREET
HACKENSACK, NJ 07601-7032

946280024

NUMBER 042
DEY STREET REGULATOR
HARRISON

PASSAIC VALLEY
SEWERAGE COMMISSIONERS

COMBINED SEWER SYSTEM
FACILITIES INVENTORY AND
ASSESSMENT ANALYSIS

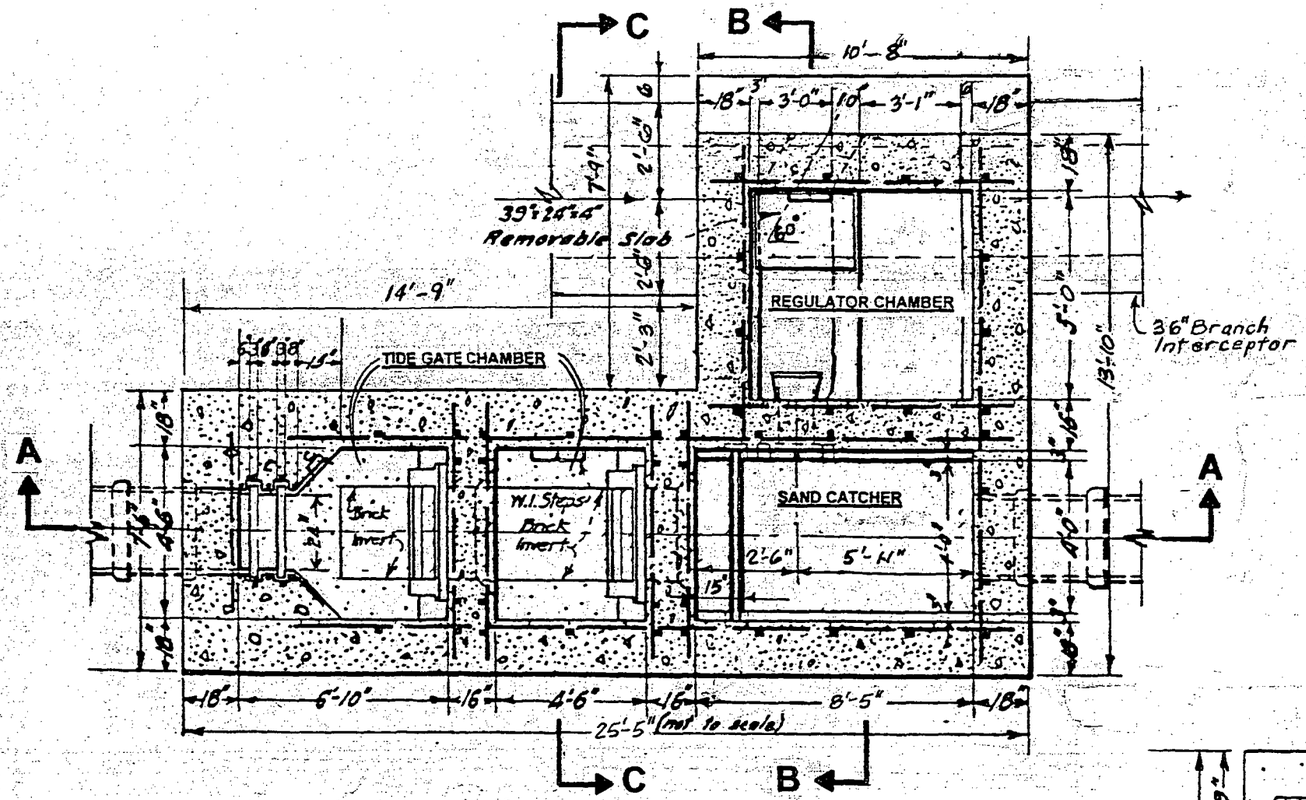

SECTIONAL PLAN

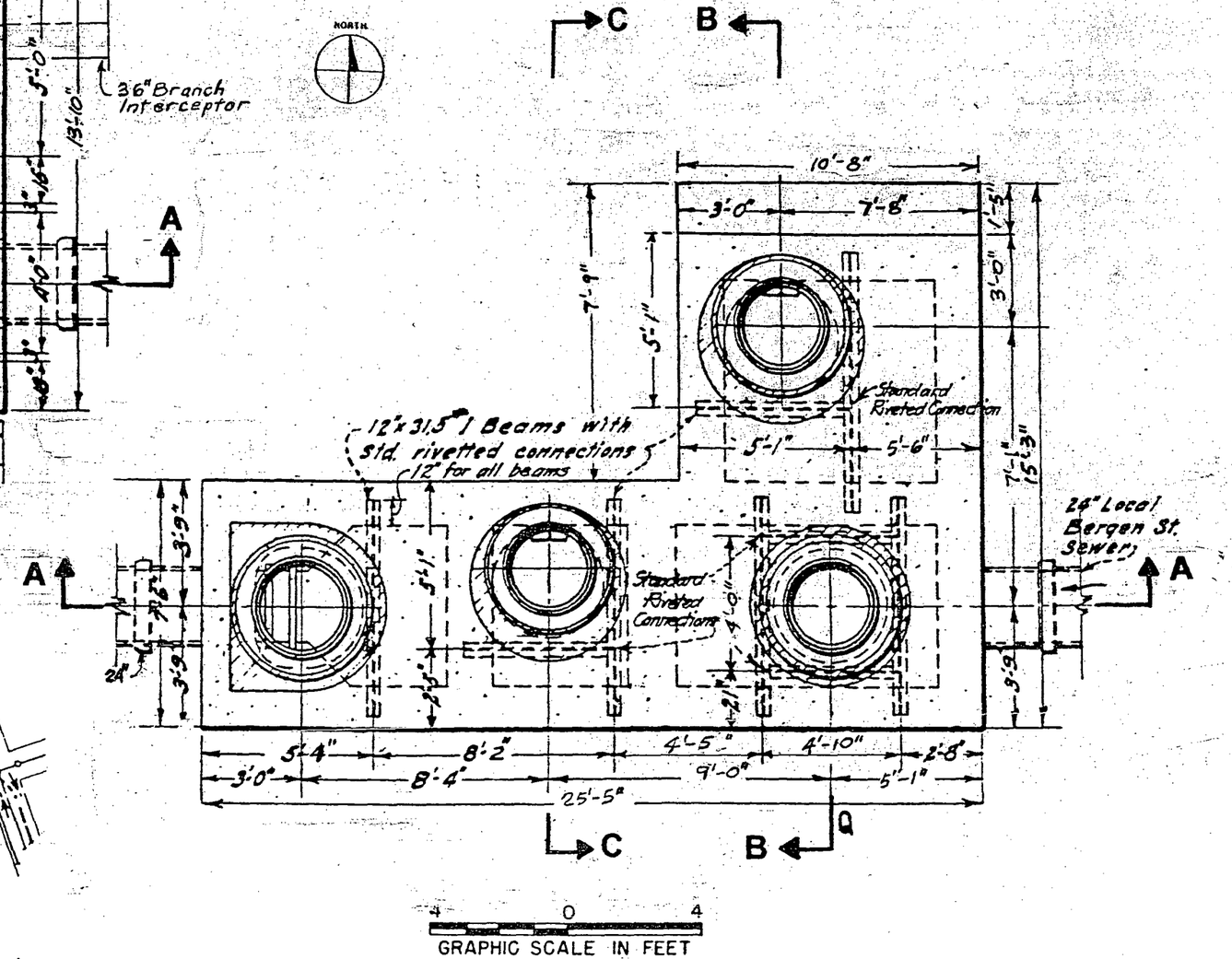

TOP PLAN

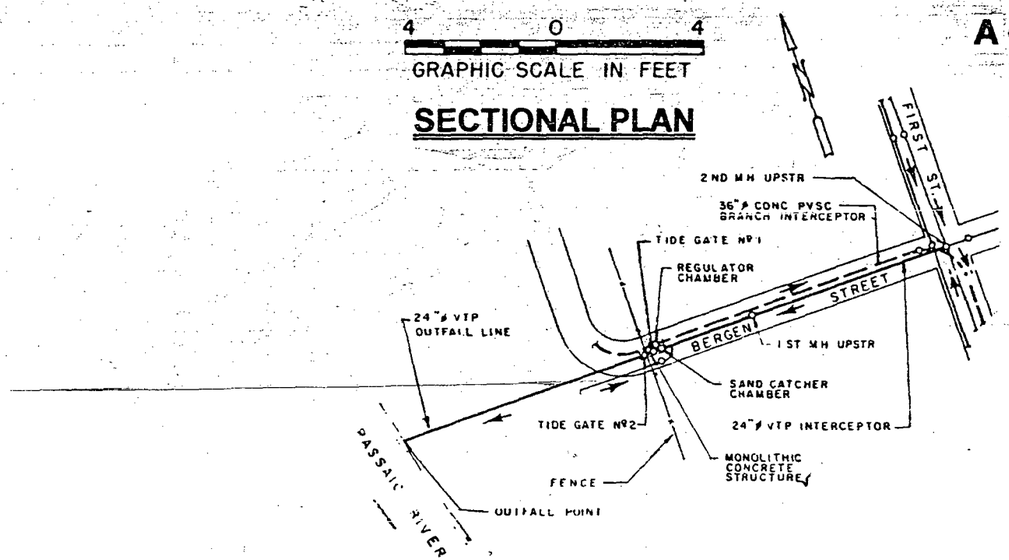

PLAN

SCALE IN FEET

CHARLES A. MANGANARO
CONSULTING ENGINEERS
A PROFESSIONAL CORPORATION

COURT PLAZA NORTH, 25 MAIN STREET
HACKENSACK, NJ 07601-7032

946280025

NUMBER 044
BERGEN STREET REGULATOR
HARRISON

PASSAIC VALLEY
SEWERAGE COMMISSIONERS

COMBINED SEWER SYSTEM
FACILITIES INVENTORY AND
ASSESSMENT ANALYSIS

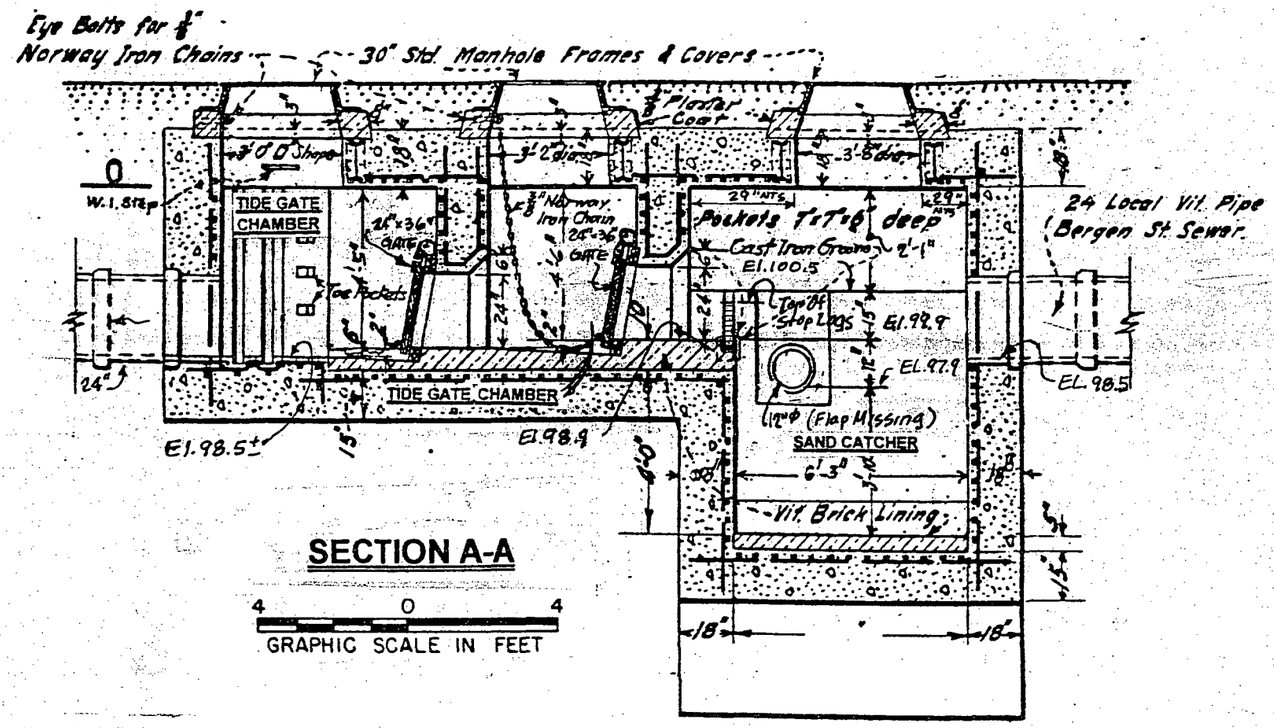

SECTION A-A

4 0 4
GRAPHIC SCALE IN FEET

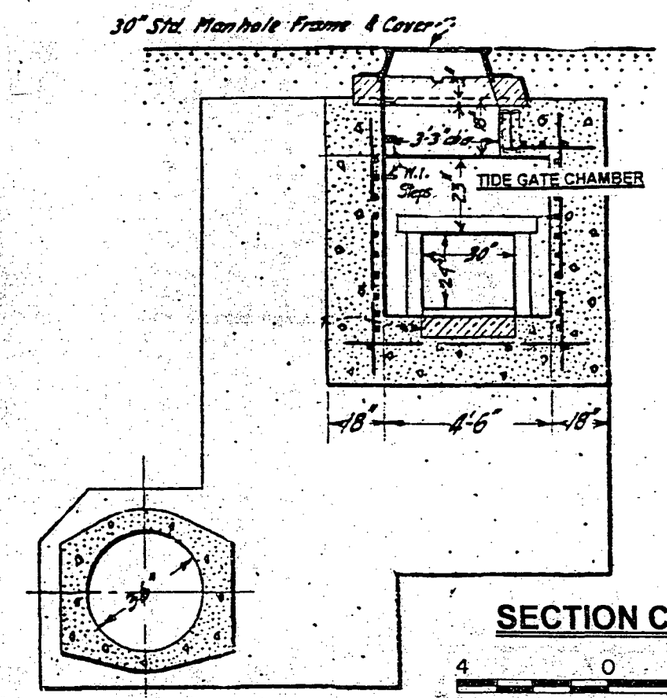

SECTION C-C

4 0 4
GRAPHIC SCALE IN FEET

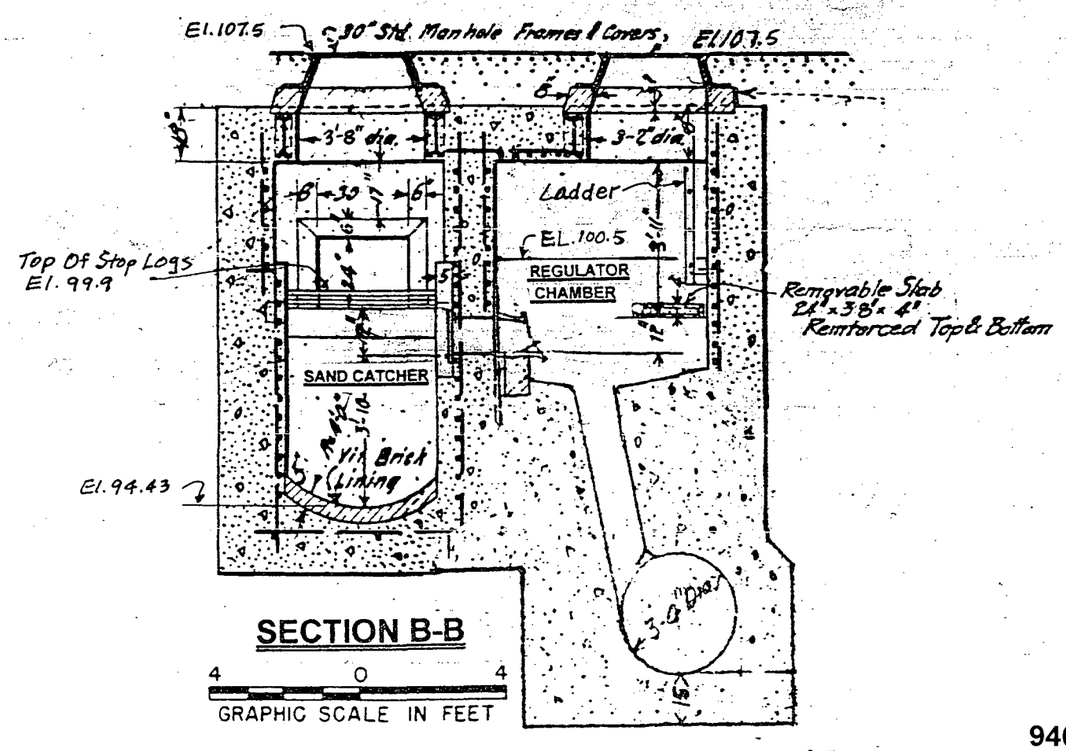

SECTION B-B

4 0 4
GRAPHIC SCALE IN FEET

CHARLES A. MANGANARO
CONSULTING ENGINEERS
A PROFESSIONAL CORPORATION

COURT PLAZA NORTH, 25 MAIN STREET
HACKENSACK, NJ 07601-7032

946280026

NUMBER 044
BERGEN STREET REGULATOR
HARRISON

PASSAIC VALLEY
SEWERAGE COMMISSIONERS

COMBINED SEWER SYSTEM
FACILITIES INVENTORY AND
ASSESSMENT ANALYSIS

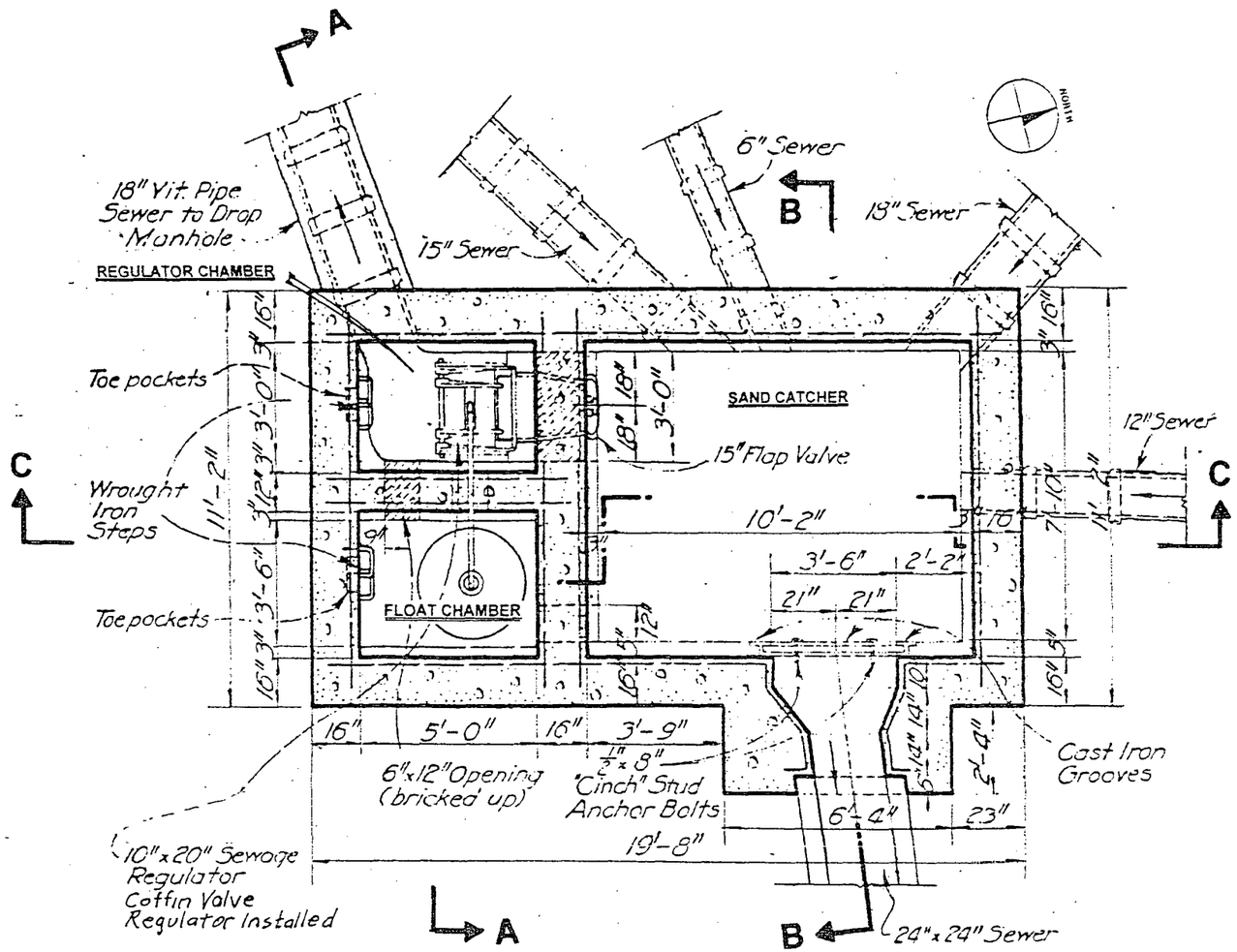

SECTIONAL PLAN

4 0 4
GRAPHIC SCALE IN FEET

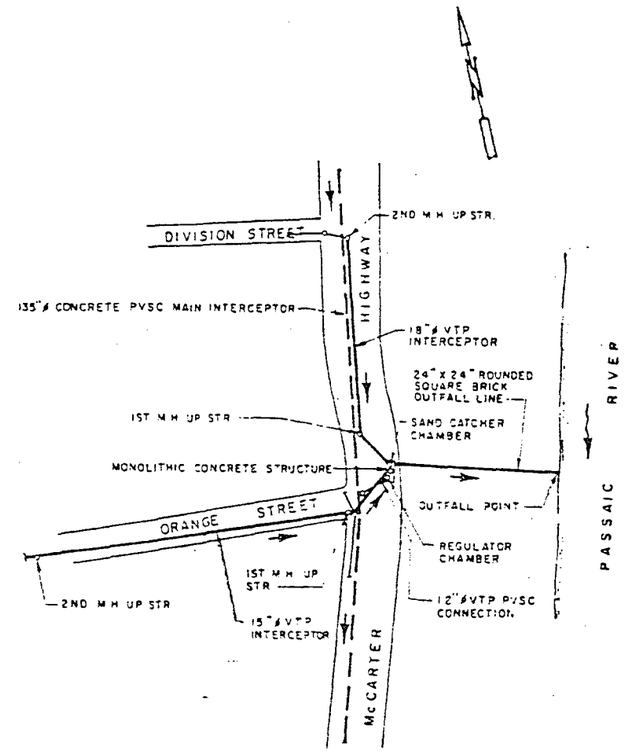

PLAN

SCALE IN FEET

NUMBER 052
ORANGE STREET REGULATOR
NEWARK

PASSAIC VALLEY
SEWERAGE COMMISSIONERS

COMBINED SEWER SYSTEM
FACILITIES INVENTORY AND
ASSESSMENT ANALYSIS

CHARLES A. MANGANARO
CONSULTING ENGINEERS
A PROFESSIONAL CORPORATION

COURT PLAZA NORTH, 25 MAIN STREET
HACKENSACK, NJ 07601-7032

946280027

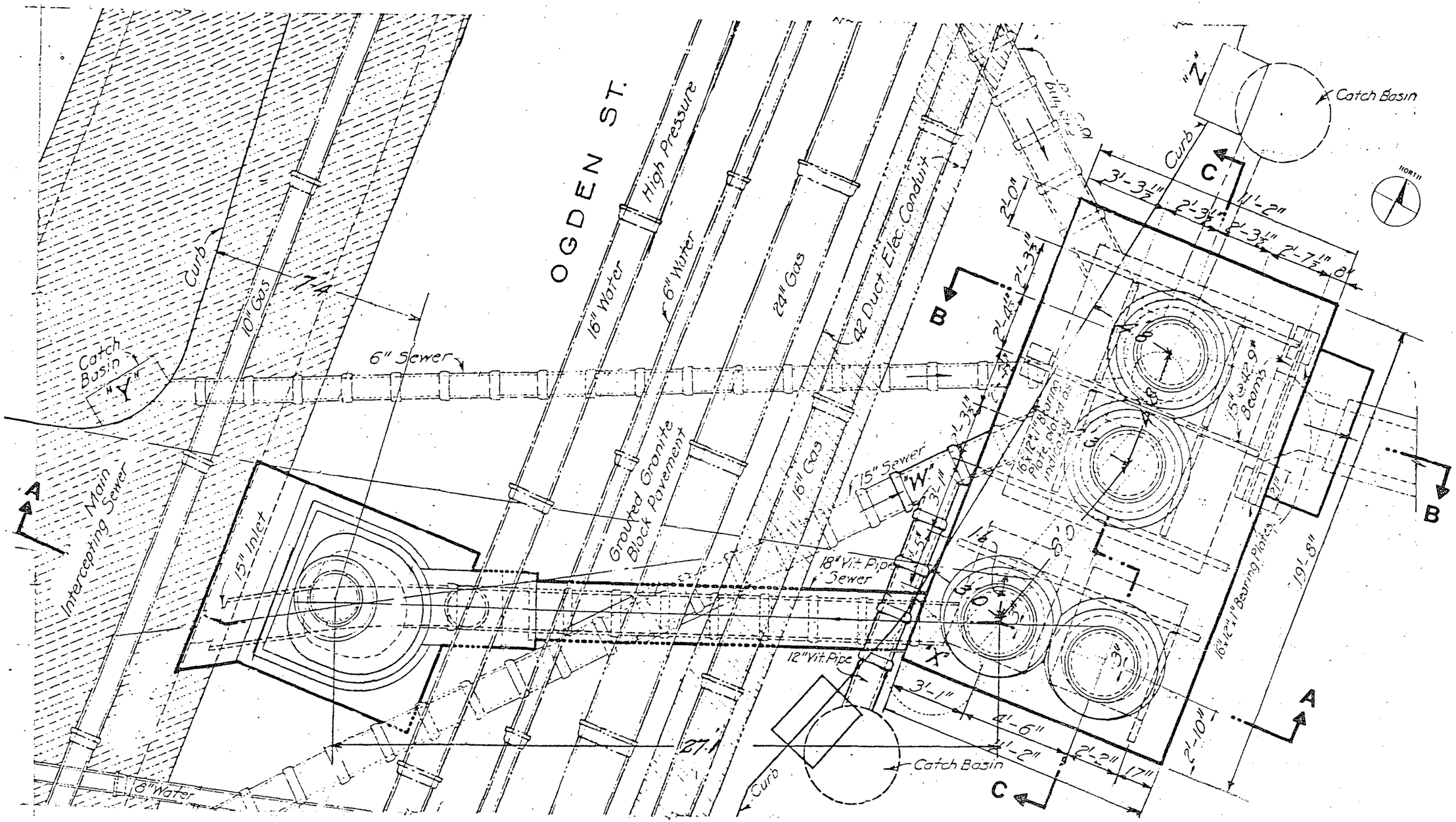

NUMBER 052
ORANGE STREET REGULATOR
NEWARK

PASSAIC VALLEY
SEWERAGE COMMISSIONERS

COMBINED SEWER SYSTEM
FACILITIES INVENTORY AND
ASSESSMENT ANALYSIS

CHARLES A. MANGANARO
CONSULTING ENGINEERS
A PROFESSIONAL CORPORATION

COURT PLAZA NORTH, 25 MAIN STREET
HACKENSACK, NJ 07601-7032

946280028

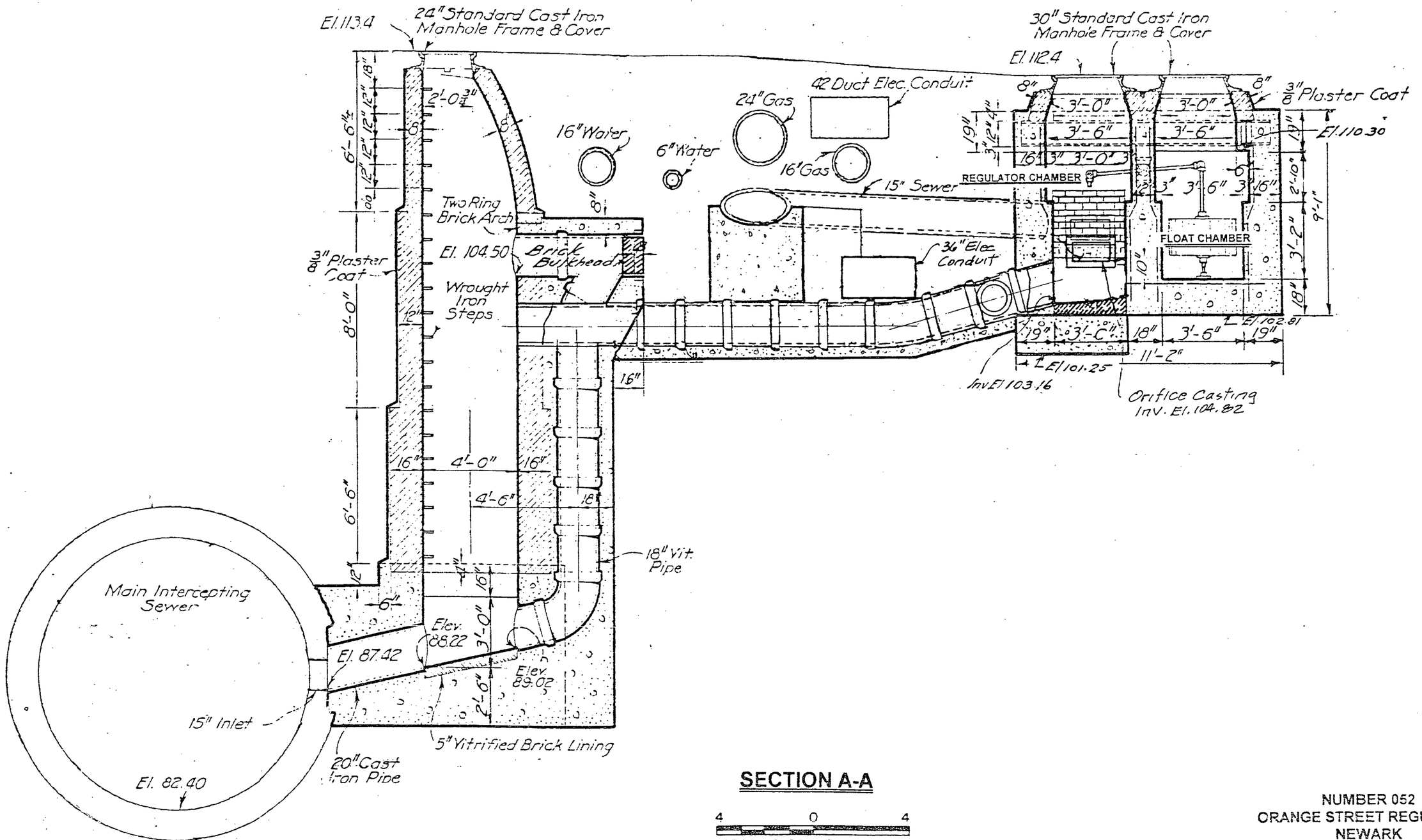

SECTION A-A

4 0 4
GRAPHIC SCALE IN FEET

CHARLES A. MANGANARO
CONSULTING ENGINEERS
A PROFESSIONAL CORPORATION

COURT PLAZA NORTH, 25 MAIN STREET
HACKENSACK, NJ 07601-7032

NUMBER 052
ORANGE STREET REGULATOR
NEWARK

PASSAIC VALLEY
SEWERAGE COMMISSIONERS

COMBINED SEWER SYSTEM
FACILITIES INVENTORY AND
ASSESSMENT ANALYSIS

FIGURE 052-4

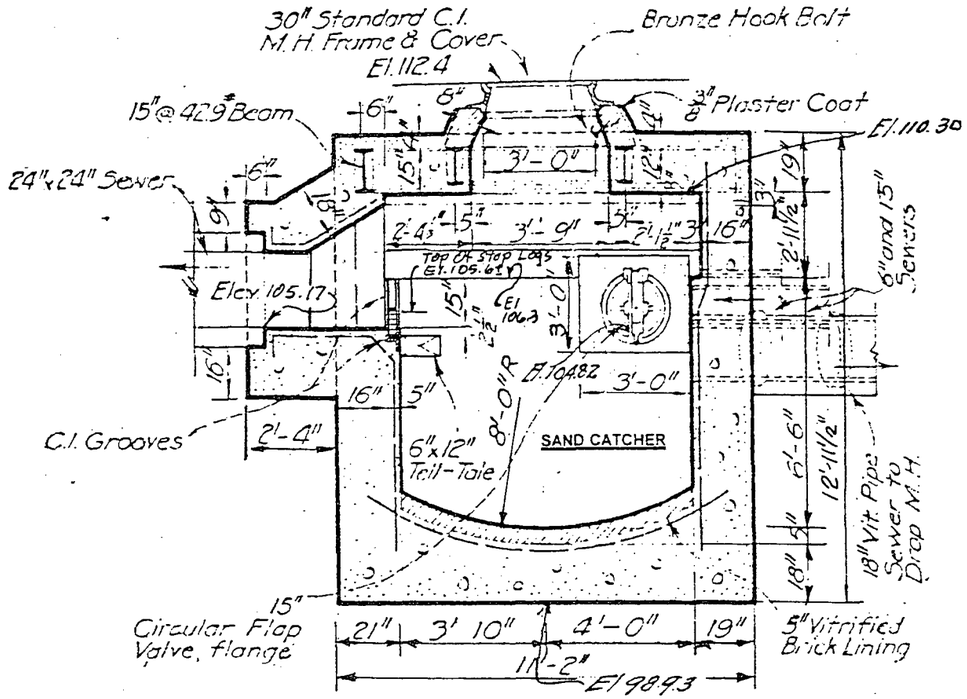

SECTION B-B

4 0 4
GRAPHIC SCALE IN FEET

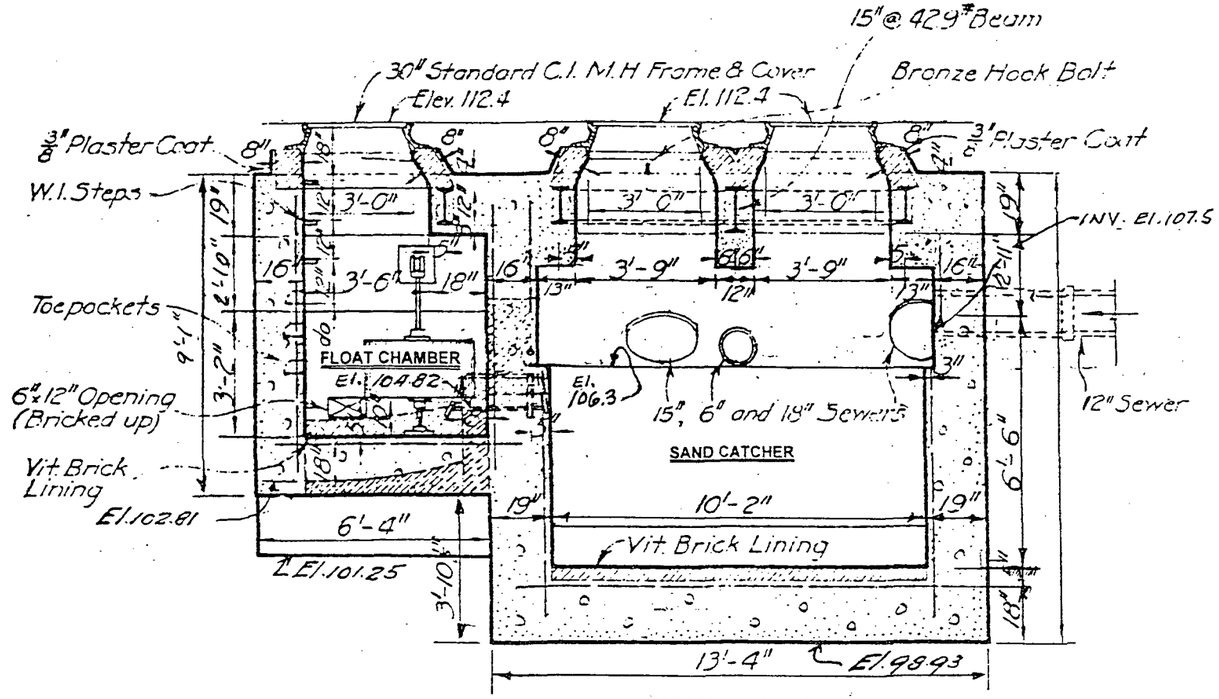

SECTION C-C

4 0 4
GRAPHIC SCALE IN FEET

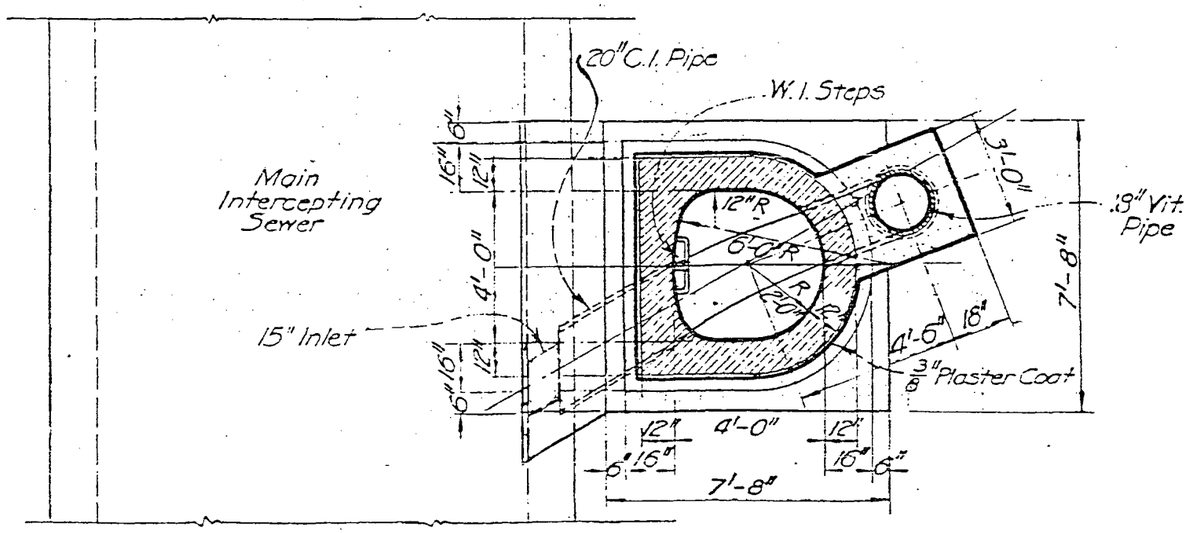

SECTIONAL PLAN

4 0 4
GRAPHIC SCALE IN FEET

CHARLES A. MANGANARO
CONSULTING ENGINEERS
A PROFESSIONAL CORPORATION

COURT PLAZA NORTH, 25 MAIN STREET
HACKENSACK, NJ 07601-7032

946280030

NUMBER 052
ORANGE STREET REGULATOR
NEWARK

PASSAIC VALLEY
SEWERAGE COMMISSIONERS

COMBINED SEWER SYSTEM
FACILITIES INVENTORY AND
ASSESSMENT ANALYSIS

FIGURE 055-1

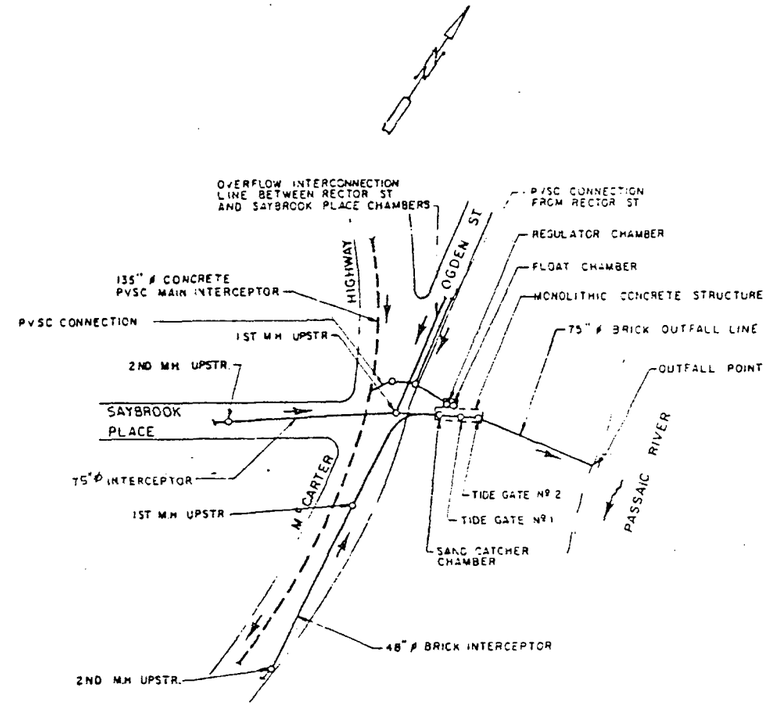

PLAN

SCALE IN FEET

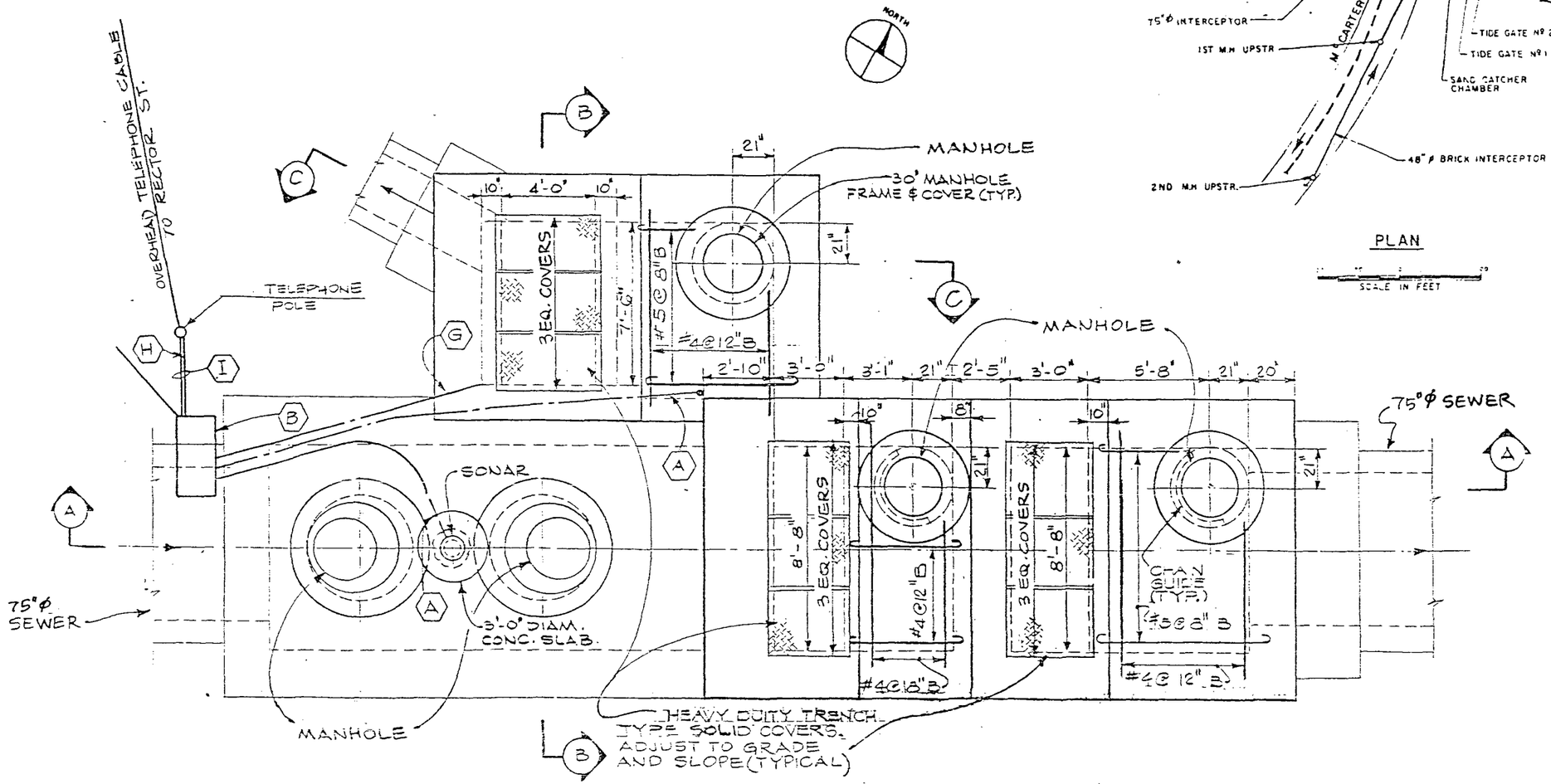

TOP PLAN

5 0 5

GRAPHIC SCALE IN FEET

CHARLES A. MANGANARO
CONSULTING ENGINEERS
A PROFESSIONAL CORPORATION

COURT PLAZA NORTH, 25 MAIN STREET
HACKENSACK, NJ 07601-7032

NUMBER 055
SAYBROOK PLACE REGULATOR
NEWARK

PASSAIC VALLEY
SEWERAGE COMMISSIONERS

COMBINED SEWER SYSTEM
FACILITIES INVENTORY AND
ASSESSMENT ANALYSIS

946280031

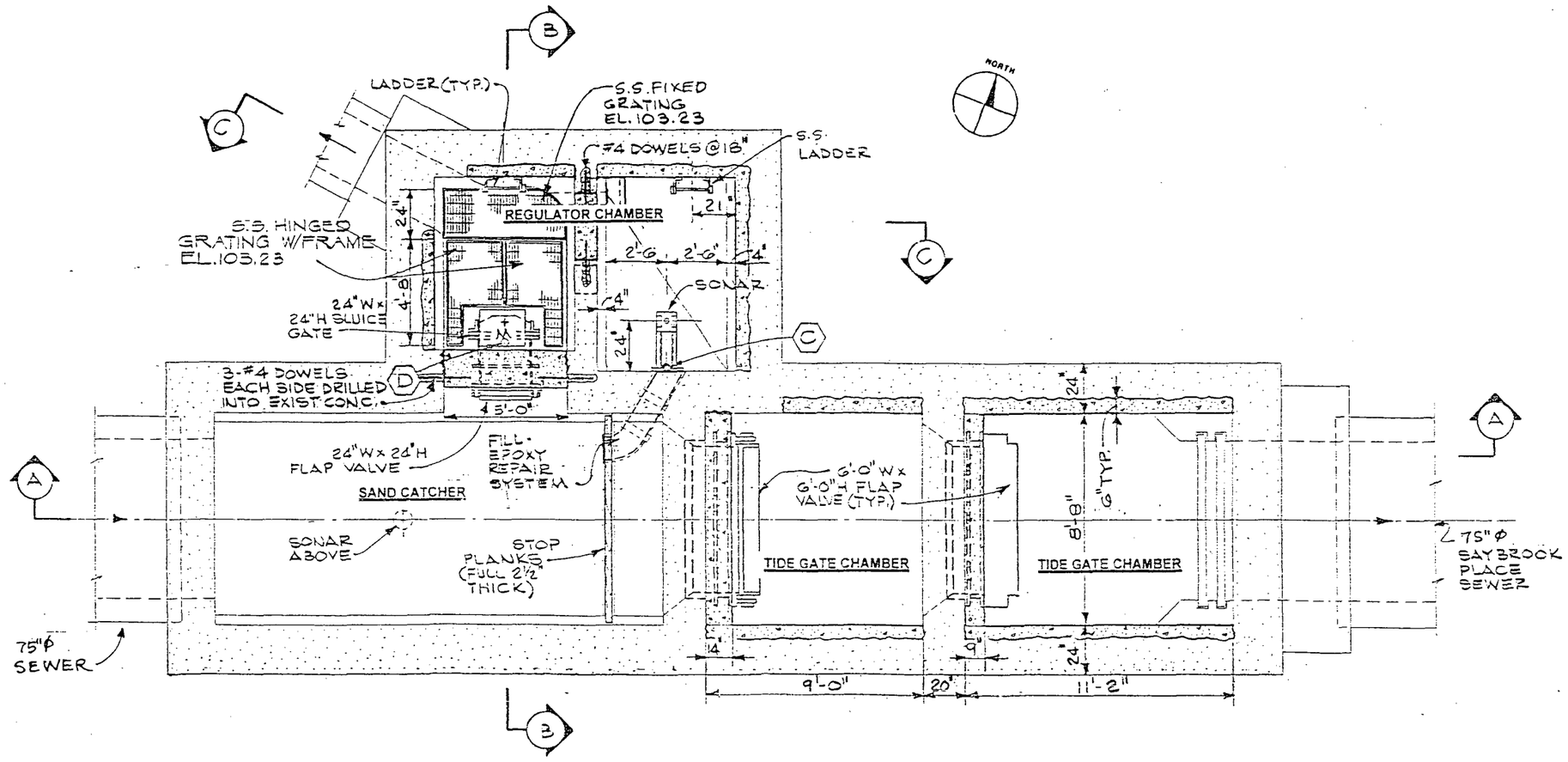

SECTIONAL PLAN

6 0 5
GRAPHIC SCALE IN FEET

NUMBER 055
SAYBROOK PLACE REGULATOR
NEWARK

PASSAIC VALLEY
SEWERAGE COMMISSIONERS

COMBINED SEWER SYSTEM
FACILITIES INVENTORY AND
ASSESSMENT ANALYSIS

CHARLES A. MANGANARO
CONSULTING ENGINEERS
A PROFESSIONAL CORPORATION

COURT PLAZA NORTH, 25 MAIN STREET
HACKENSACK, NJ 07601-7002

946280032

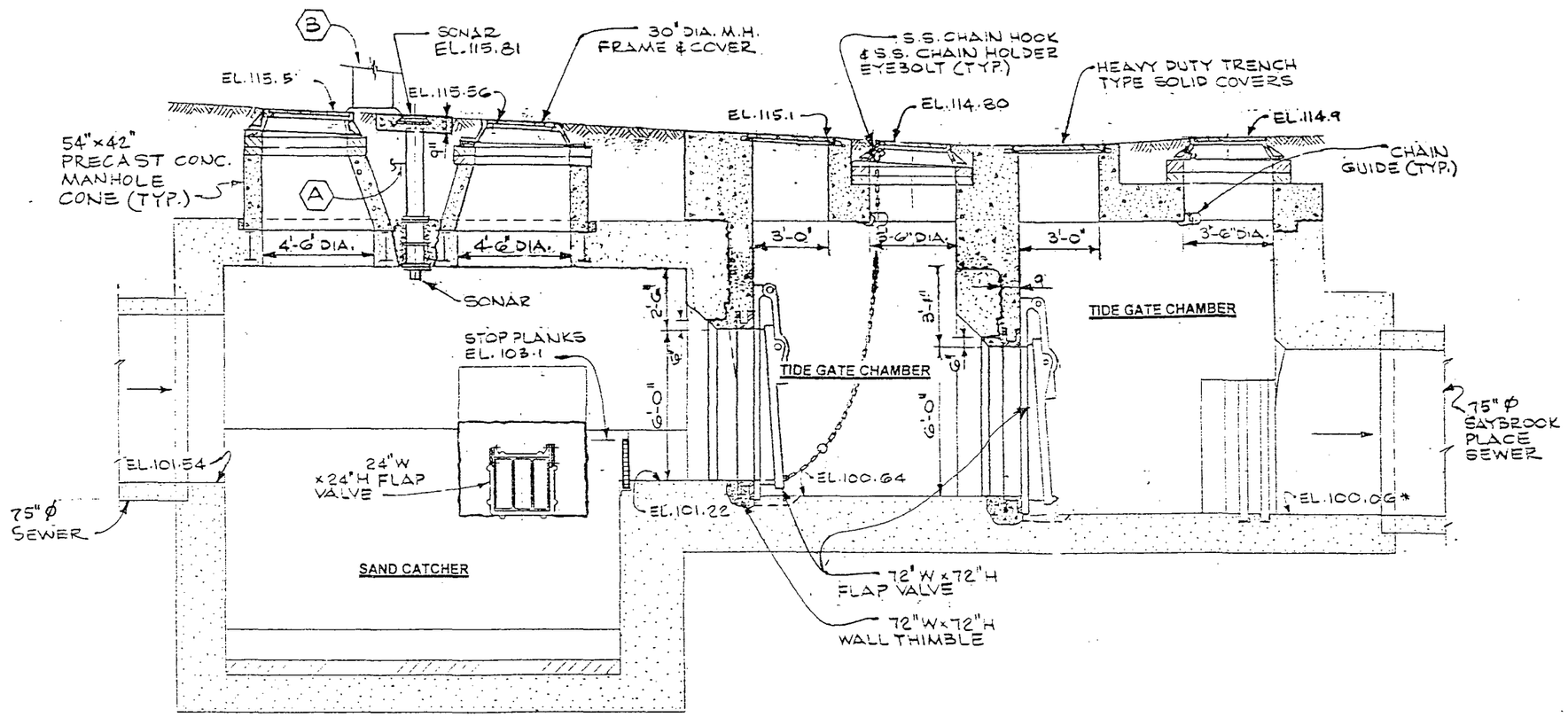

SECTION A-A

8 0 5
GRAPHIC SCALE IN FEET

NUMBER 055
SAYBROOK PLACE REGULATOR
NEWARK

PASSAIC VALLEY
SEWERAGE COMMISSIONERS

COMBINED SEWER SYSTEM
FACILITIES INVENTORY AND
ASSESSMENT ANALYSIS

CHARLES A. MANGANARO
CONSULTING ENGINEERS
A PROFESSIONAL CORPORATION

COURT PLAZA NORTH, 25 MAIN STREET
HACKENSACK, NJ 07601-7032

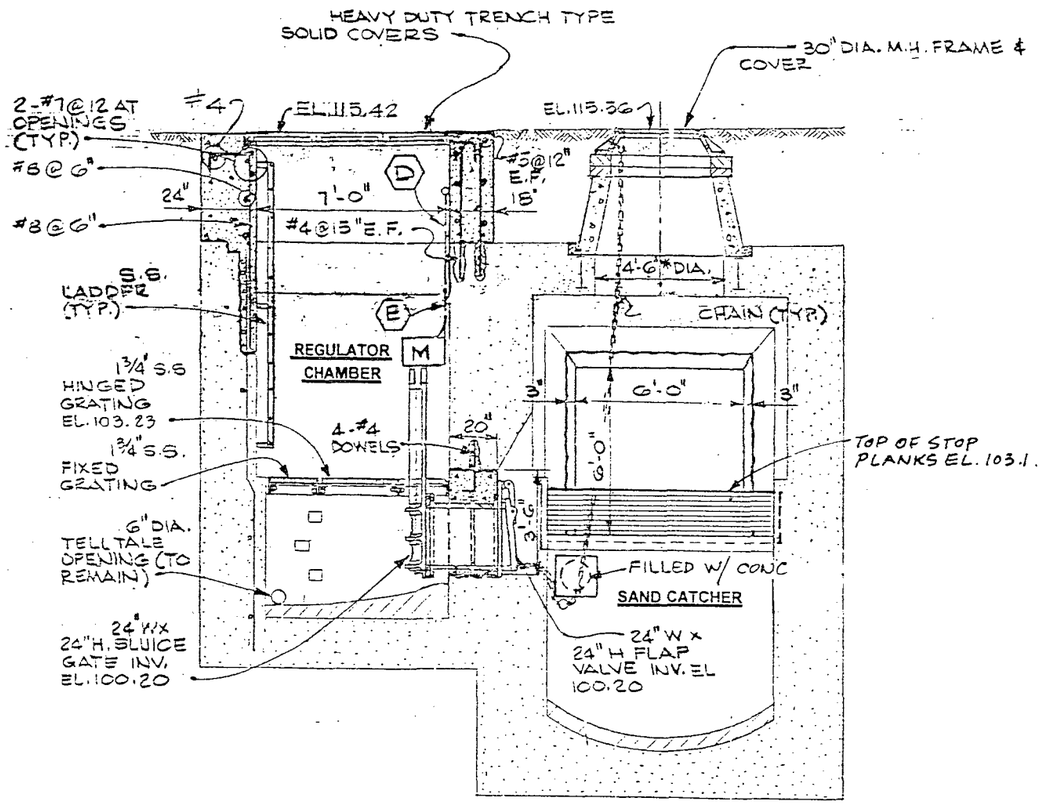

SECTION B-B

5 0 5
GRAPHIC SCALE IN FEET

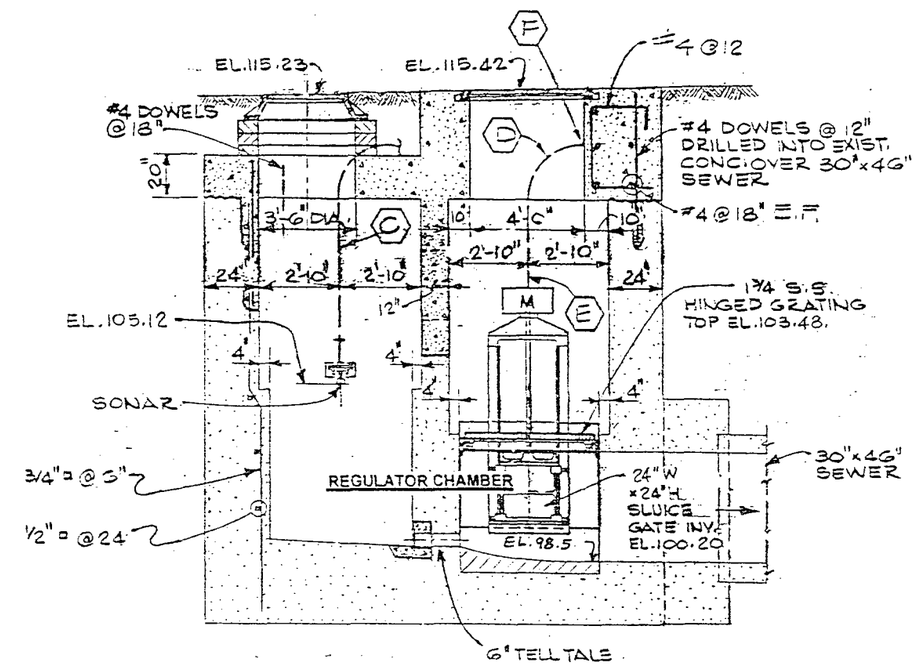

SECTION C-C

5 0 5
GRAPHIC SCALE IN FEET

CHARLES A. MANGANARO
CONSULTING ENGINEERS
A PROFESSIONAL CORPORATION

COURT PLAZA NORTH, 25 MAIN STREET
HACKENSACK, NJ 07601-7032

NUMBER 055
SAYBROOK PLACE REGULATOR
NEWARK

PASSAIC VALLEY
SEWERAGE COMMISSIONERS

COMBINED SEWER SYSTEM
FACILITIES INVENTORY AND
ASSESSMENT ANALYSIS

946280034

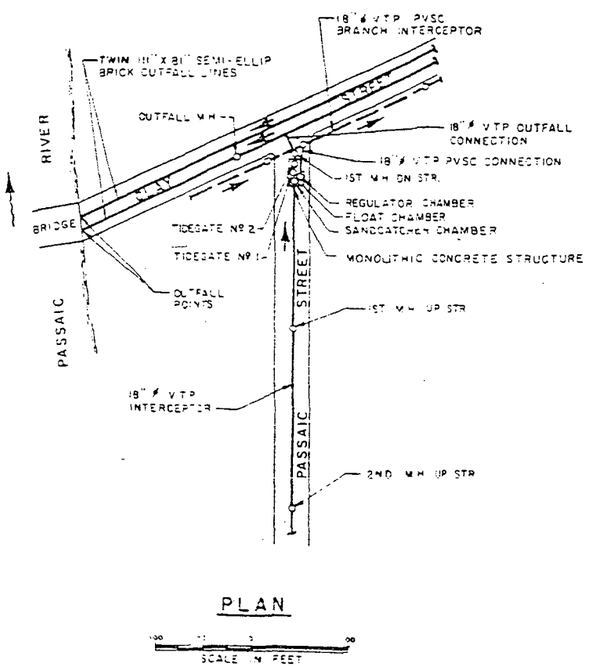

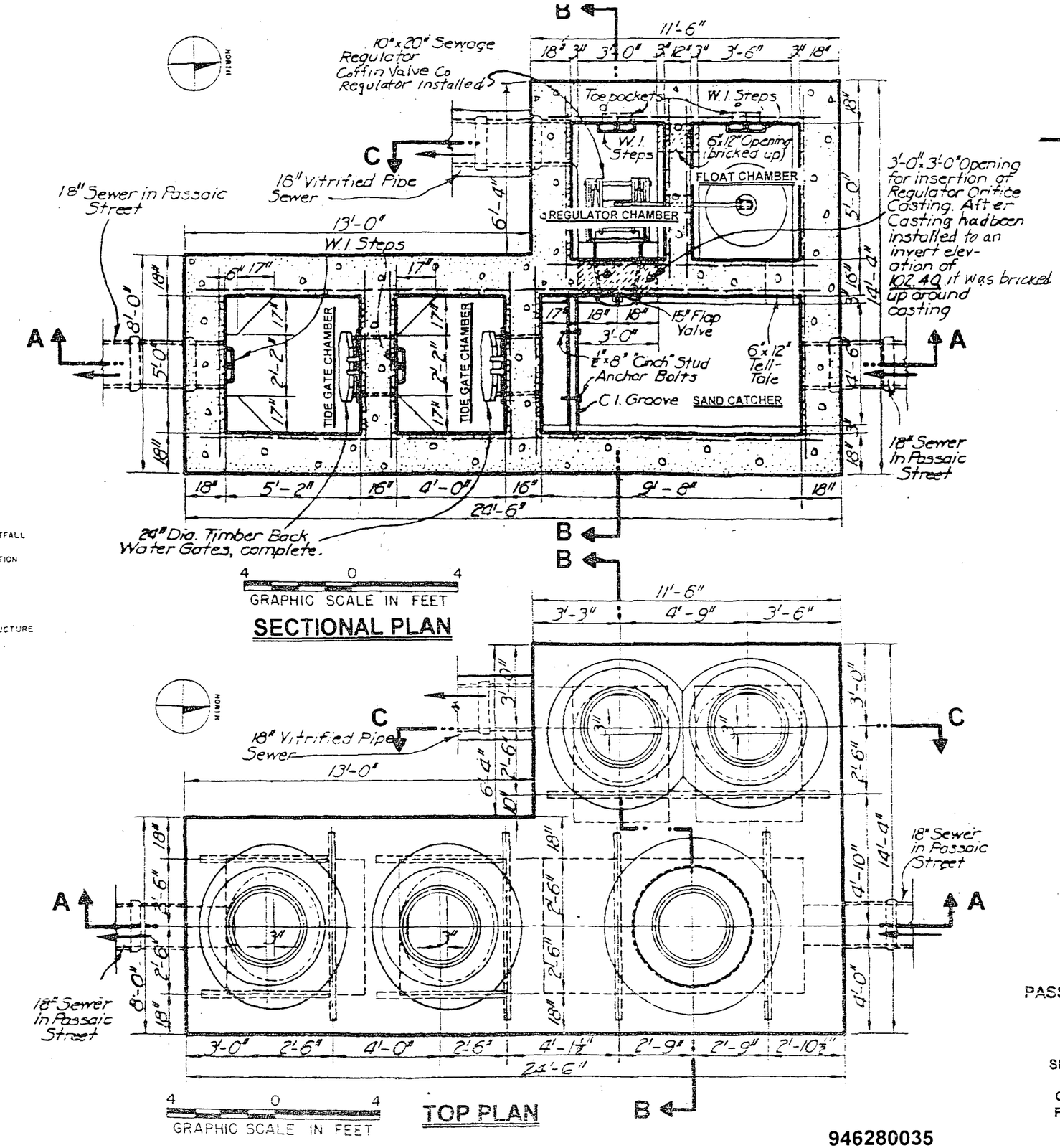

CHARLES A. MANGANARO
CONSULTING ENGINEERS
A PROFESSIONAL CORPORATION

COURT PLAZA NORTH, 25 MAIN STREET
HACKENSACK, NJ 07601-7022

946280035

NUMBER 076
PASSAIC STREET REGULATOR
NEWARK

PASSAIC VALLEY
SEWERAGE COMMISSIONERS

COMBINED SEWER SYSTEM
FACILITIES INVENTORY AND
ASSESSMENT ANALYSIS

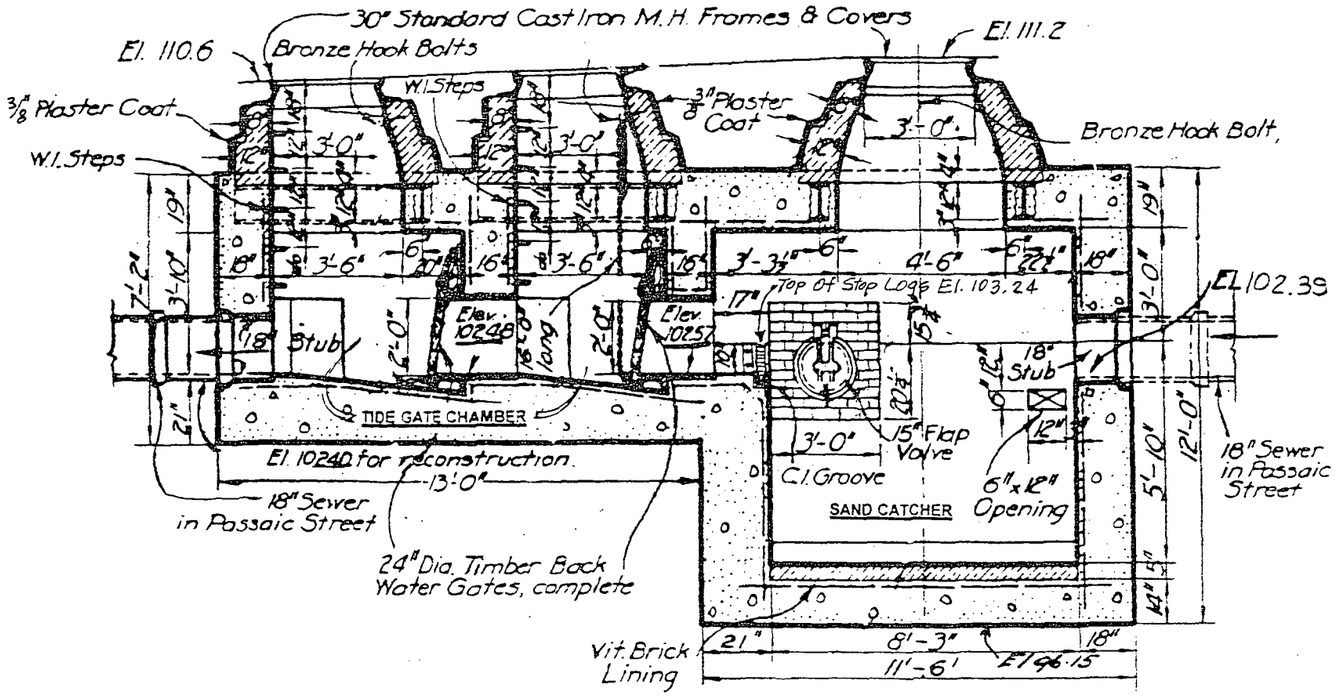

SECTION A-A

4 0 4
GRAPHIC SCALE IN FEET

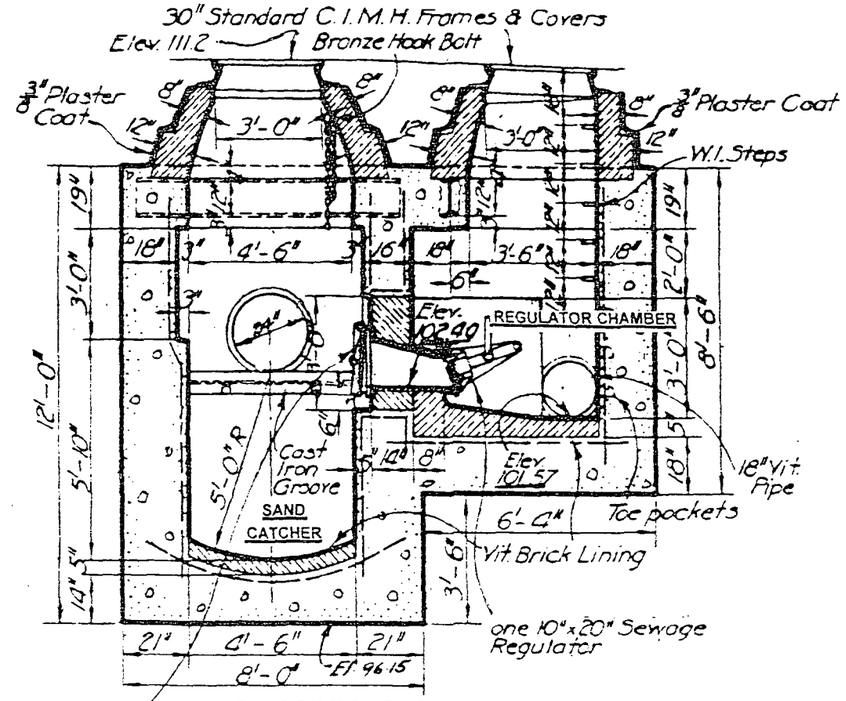

SECTION B-B

4 0 4
GRAPHIC SCALE IN FEET

15" Circular Flap Valve, flange

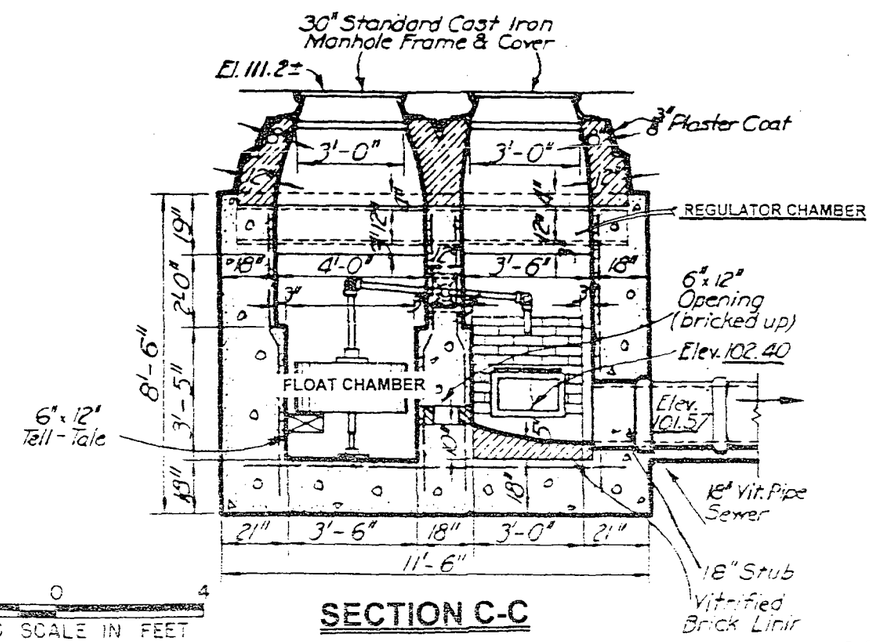

SECTION C-C

4 0 4
GRAPHIC SCALE IN FEET

CHARLES A. MANGANARO
CONSULTING ENGINEERS
A PROFESSIONAL CORPORATION

COURT PLAZA NORTH, 25 MAIN STREET
HACKENSACK, NJ 07601-7032

NUMBER 076
PASSAIC STREET REGULATOR
NEWARK

PASSAIC VALLEY
SEWERAGE COMMISSIONERS

COMBINED SEWER SYSTEM
FACILITIES INVENTORY AND
ASSESSMENT ANALYSIS

946280036

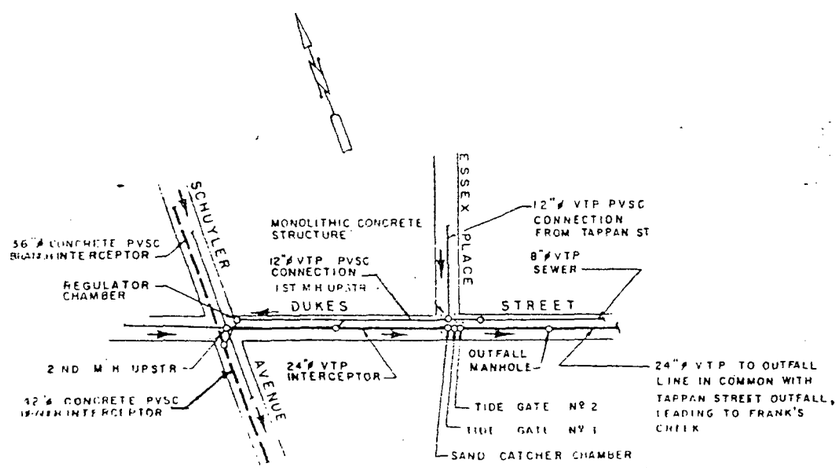

PLAN

SCALE IN FEET

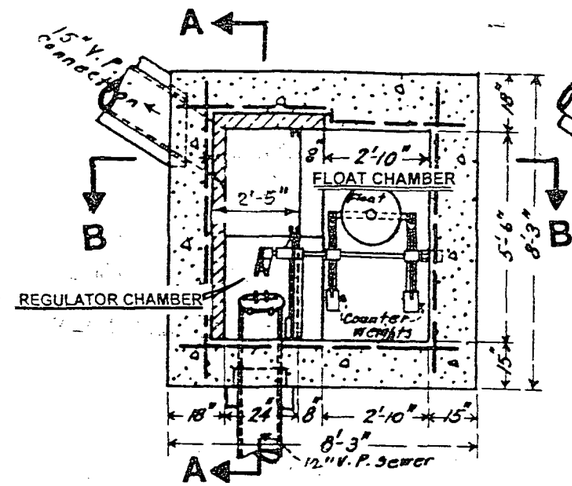

SECTIONAL PLAN

4 0 4

GRAPHIC SCALE IN FEET

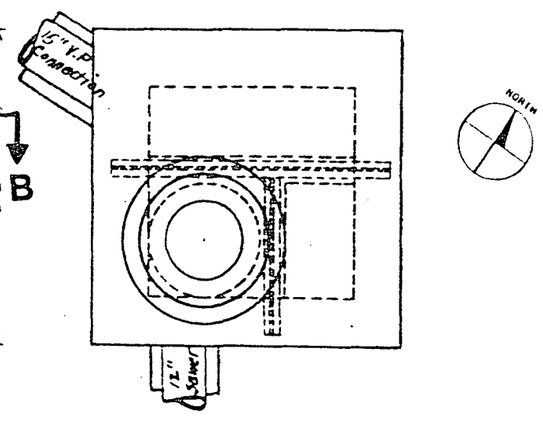

TOP PLAN

4 0 4

GRAPHIC SCALE IN FEET

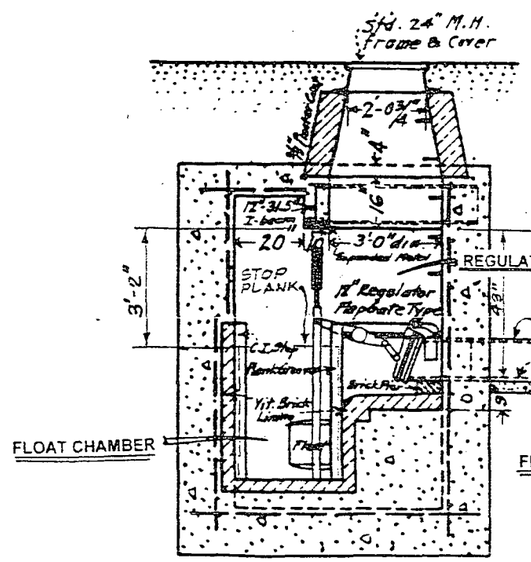

SECTION A-A

4 0 4

GRAPHIC SCALE IN FEET

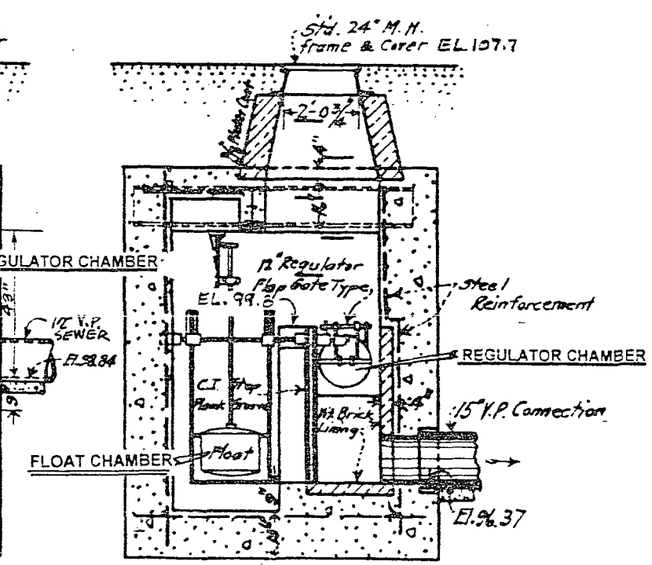

SECTION B-B

4 0 4

GRAPHIC SCALE IN FEET

CHARLES A. MANGANARO
CONSULTING ENGINEERS
A PROFESSIONAL CORPORATION

COURT PLAZA NORTH, 25 MAIN STREET
HACKENSACK, NJ 07601-7052

946280037

NUMBER 037
DUKE STREET REGULATOR
KEARNY

PASSAIC VALLEY
SEWERAGE COMMISSIONERS

COMBINED SEWER SYSTEM
FACILITIES INVENTORY AND
ASSESSMENT ANALYSIS

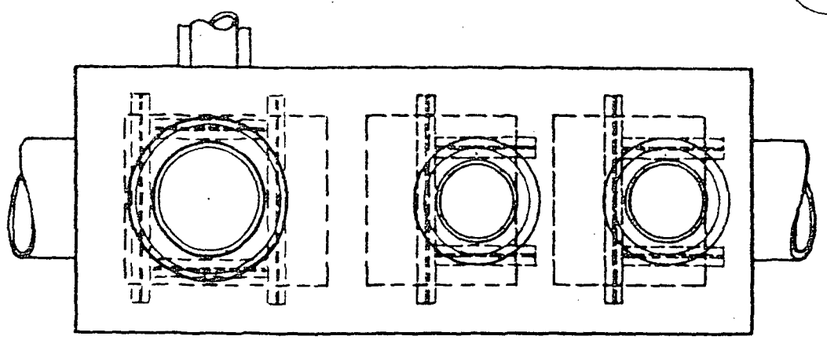

TOP PLAN

4 0 4
GRAPHIC SCALE IN FEET

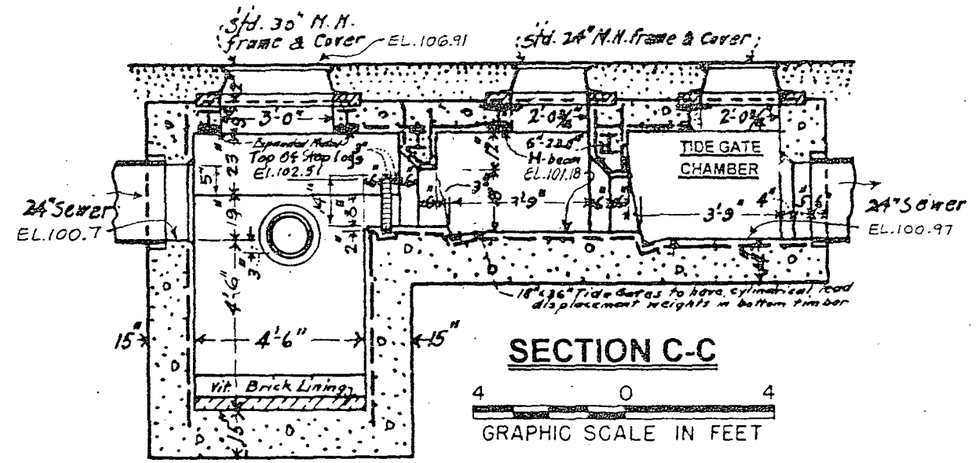

SECTION C-C

4 0 4
GRAPHIC SCALE IN FEET

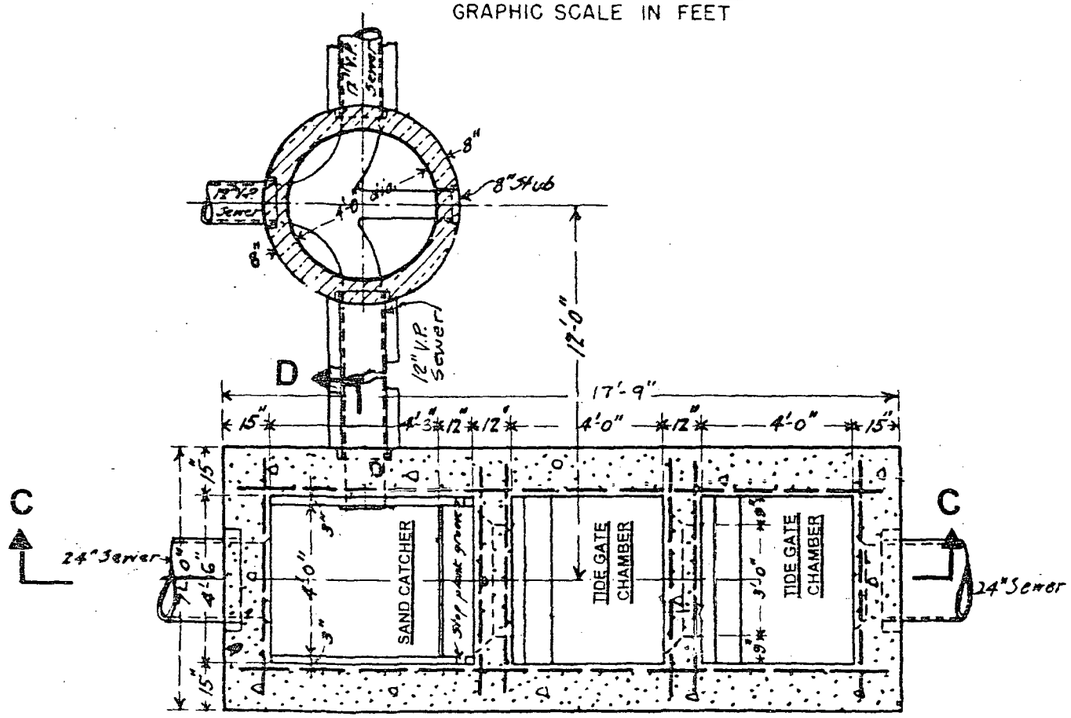

SECTIONAL PLAN

4 0 4
GRAPHIC SCALE IN FEET

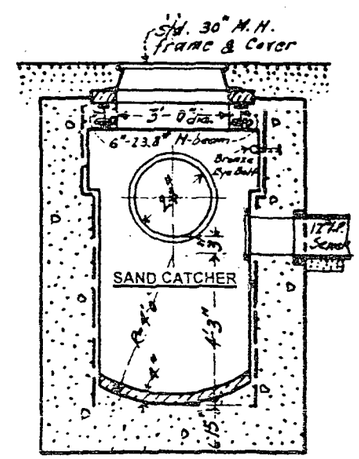

SECTION D-D

4 0 4
GRAPHIC SCALE IN FEET

CHARLES A. MANGANARO
CONSULTING ENGINEERS
A PROFESSIONAL CORPORATION

COURT PLAZA NORTH, 25 MAIN STREET
HACKENSACK, NJ 07601-7032

946280038

NUMBER 037
DUKE STREET REGULATOR
KEARNY

PASSAIC VALLEY
SEWERAGE COMMISSIONERS

COMBINED SEWER SYSTEM
FACILITIES INVENTORY AND
ASSESSMENT ANALYSIS

Roanoke Avenue Regulator

946280039

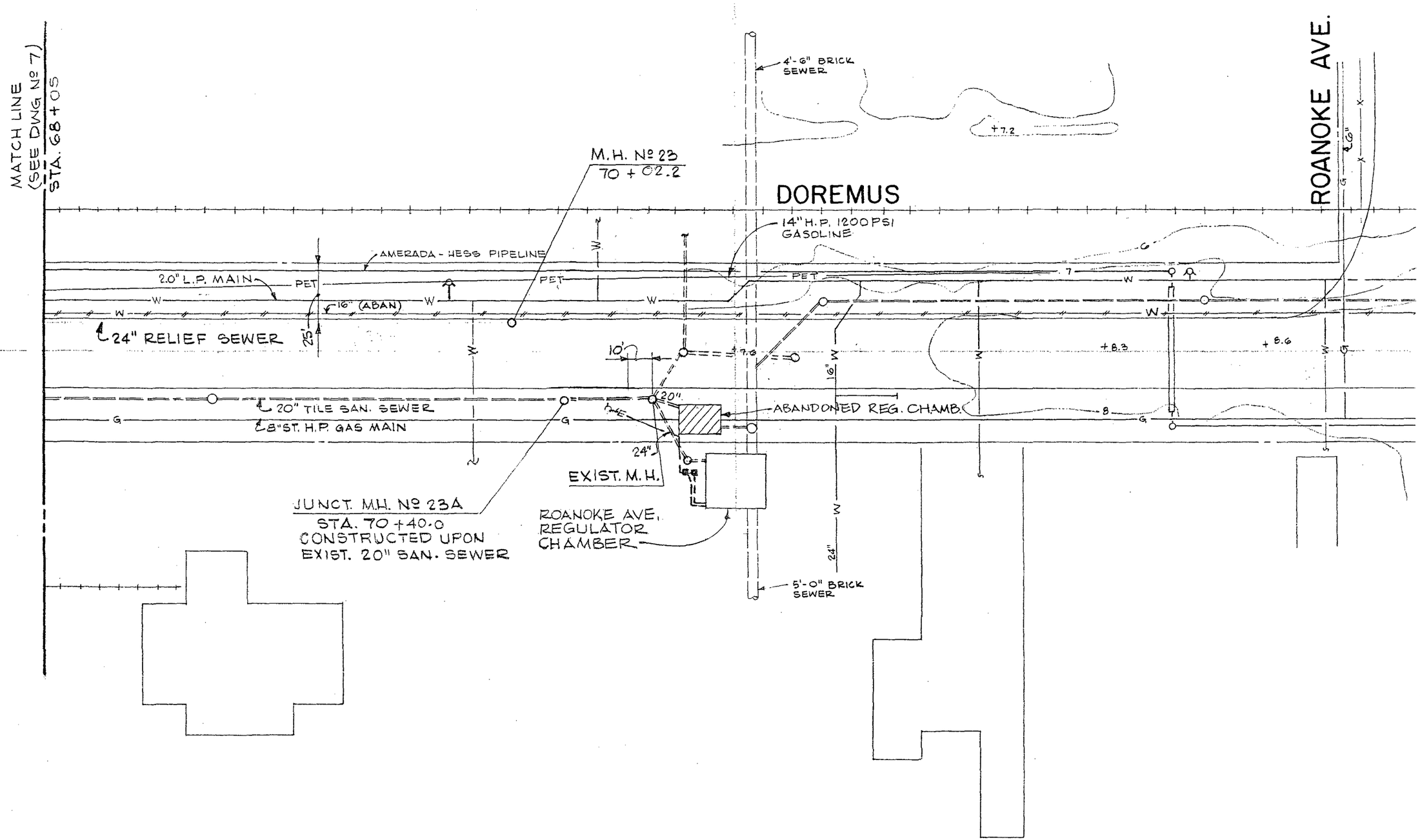

PLAN

946280040