Appendix D

OU 1 RI Monitoring Well Construction Diagrams
Puchack Well Field Superfund Site
Pennsauken Township, New Jersey

Double-Cased Monitoring Well

CDM Federal Programs Corporation

Client:	U.S. Environmental Protection Agency
Site Name:	Puchack Well Field (3220-002)
Project Location:	Pennsauken, New Jersey
Drilling Contractor:	Uni-Tech Drilling Co.
Drill Rig:	FAILING 1500
Drilling Method:	MUD ROTARY

Well No.:	CCWD MW-1D
Location:	Bethel Ave.
Drilling Date(s):	9/27/00-10/4/00
Initial Water Level (ft. bgs):	
Geologist:	M Shammad Akbar
North: East:	Elevation (ft.amsl):
Depth to Bottom (ft. bgs):	~~294~~ 235'

Annular Space Details

Type of Surface Seal: ~~CEMENT/BENTONITE~~ Portland Type II

Type of Annular Grout: CEMENT/BENTONITE

Type of Seal: Filter Pro NO. 00 SAND

Type of Filter Pack: Filter Pro NO. 1 SAND

Type of Backfill: Filter Pro NO. 1 SAND

Well Construction Materials

	Diameter	Type of Material
Screen	4"	PVC SCH 40
Riser Casing	4"	PVC SCH 40
Flush Mount Type		

Measurements

Outer Casing Depth (ft. bgs)	178
Riser pipe length (ft)	220
Screen length (ft)	10
Screen slot size (in)	0.010
Depth to water (ft. bgs)	
Depth to bedrock (ft. bgs)	> 294

Designed by: DICK WALKER

Affiliation: USGS

REMARKS:

[signature] 10/4/00

NOT TO SCALE

Depths - (feet below ground surface)

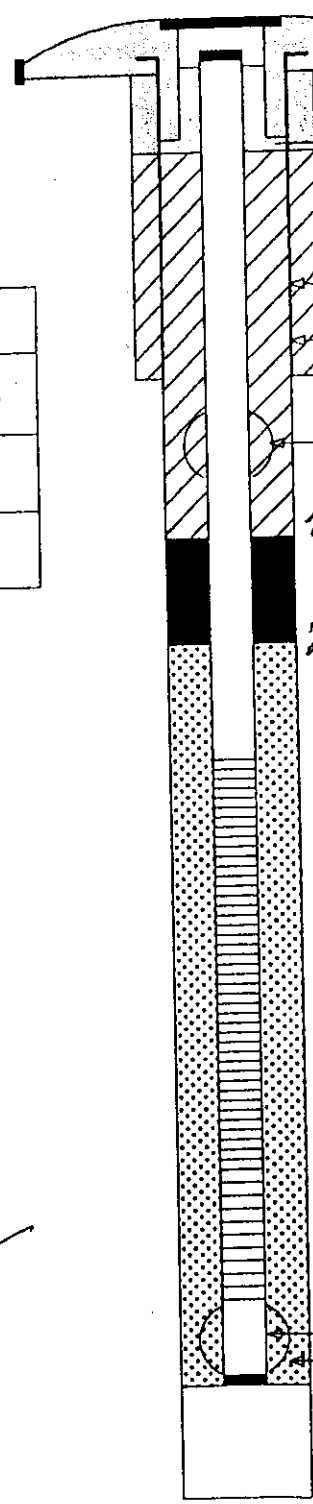

GROUND SURFACE

Sand

Borehole Diameter (in.)= 12

Borehole Diameter (in.) = 8

Outer Casing Type = 8" Steel 178'

Centralizer

213.5 ~~213.5~~ KH Top of Seal

2.5 Total Seal Interval

216 ~~216~~ KH Top of Sand

220 Top of Screen

10 Total Screen Interval

230 Bottom of Screen

5' Sump

Centralizer

~~235~~ Bottom of Well

59 Backfill Interval

294 Bottom of Borehole

DOUBLE-FORM PUCHACK.GPJ FEDERAL.GDT 6/28/00

DWR-188 M
11/98

New Jersey Department of Environmental Protection
Bureau of Water Allocation

MONITORING WELL RECORD

Well Permit No. 31 - 58629

Atlas Sheet Coordinates 31 : 02 287

OWNER IDENTIFICATION - Owner PENNSAUKEN TOWNSHIP
Address 5605 CRESCENT BLVD.
City PENNSAUKEN State NJ Zip Code

WELL LOCATION - If not the same as owner please give address. Owner's Well No. CCWD - MW 1D
County CAMDEN Municipality PENNSAUKEN TWP Lot No. 8 Block No. 1101
Address BETHEL AVENUE

DATE WELL STARTED 9 / 27 / 00
DATE WELL COMPLETED 10 / 5 / 00

TYPE OF WELL (as per Well Permit Categories) MONITORING
Regulatory Program Requiring Well Case I.D.#

CONSULTING FIRM/FIELD SUPERVISOR (if applicable) CDM Federal Programs Tele. # 212-785-9123

WELL CONSTRUCTION

Total depth drilled 294 ft.
Well finished to 235' ft.

Borehole diameter:
Top 12 in.
Bottom 8 in.

Well was finished: ☐ above grade
☒ flush mounted

If finished above grade, casing height (stick up) above land surface ____ ft.

Was steel protective casing installed?
☒ Yes ☐ No

Static water level after drilling 23.87'

Water level was measured using M Scope

Well was developed for 4 hours
at 5 gpm

Method of development Airlift / Submersible

Was permanent pumping equipment installed? ☐ Yes ☒ No

Pump capacity NA gpm

Pump type NA

Drilling Fluid Bentonite Type of Rig Failing 1500

Health and Safety Plan submitted? ☒ Yes ☐ No

Level of Protection used on site (circle one) None (D) C B A

Note: Measure all depths from land surface	Depth to Top (ft.)	Depth to Bottom (ft.)	Diameter (inches)	Material	Wgt./Rating (lbs/sch no.)
Single/Inner Casing	0	220	4"	PVC	Sch 40
Middle Casing (for triple cased wells only)					
Outer Casing (largest diameter)	0	178	8"	Steel	Sch 40
Open Hole or Screen (No. Used .010)	220	230	4	PVC	Sch 40
Blank Casings (No. Used)					
Tail Piece					
Gravel Pack	213.5	235		#00/#1 Sand	1000 #
Grout	0 / 235	178/215 / 294		Neat Cement / Bentonite	1500 lbs. / 325 lbs.

Grouting Method Pressure Tremie
Drilling Method Mud Rotary

GEOLOGIC LOG

Note each depth where water was encountered in consolidated formations.

0-15 yellow and gray fine sand
15-84 F-C sand trace silt and clay
84-124 light gray C-F sand w/ clay and silt layers
124-235 C-F gray sand
235-294' silt and clay, decomposed rock and micaceous silty sand

I certify that I have constructed the above referenced well in accordance with all well permit requirements and applicable State rules and regulations.

Drilling Company UNI-TECH DRILLING
Well Driller (Print) Michael Conover
Driller's Signature Michael Conover
Registration No. JD 1585 Date 4/30/01

COPIES: White - DEP Canary - Driller Pink - Owner Goldenrod - Health Dept.

THIS FORM MUST BE COMPLETED BY THE PERMITTEE OR HIS/HER AGENT

GROUND WATER MONITORING WELL CERTIFICATION - FORM B - LOCATION CERTIFICATION

Name of Permittee: U.S. Environmental Protection Agency
Name of Facility: Puchack Well Field Superfund Site
Location: Pennsauken Township, New Jersey
NJPDES Number:

LAND SURVEYOR'S CERTIFICATION

Well Permit Number (As assigned by NJDEP's Bureau of Water Allocation): 31-58629-
This number must be permanently affixed to the well casing.
Datum: NAD 1983 Horizontal - NGVD 1929 Vertical
Longitude (one-tenth of a second): West 75° 03' 27.1"
Latitude (one-tenth of a second): North 39° 58' 14.2"

North 414701.9'
East 335873.1'

Elevation of Top of Casing (cap off) (one-hundredth of a foot): WC = 73.55' IC = 73.16' GR= 73.58'
Owners Well Number (As shown on application or plans): CCWDMW-1D

BENCHMARK - NGS Monument "D 100" **ELEVATION** - 44.55'
GEOGRAPHIC POSITION - North 39° 58' 25"
West 75° 03' 37"
DATE OF SURVEY - June, 2001

AUTHENTICATION

I certify under penalty of law that I have personally examined and am familiar with the information submitted in this document and all attachments and that, based on my inquiry of those individuals immediately responsible for obtaining the information, I believe the submitted information is true, accurate and complete. I am aware that there are significant penalties for submitting false information including the possibility of fine and imprisonment.

Paul J Emilius Jr.

PROFESSIONAL LAND SURVEYOR'S SIGNATURE

Paul J. Emilius, Jr.
PROFESSIONAL LAND SURVEYOR'S NAME
(Please print or type)

SEAL

New Jersey P.L.S. License No. 37186
PROFESSIONAL LAND SURVEYOR'S LICENSE #

The Department reserves the right in cases of violation of permit specified ground water limits or Ground Water Qu Standards (N.J.A.C. 7:9-6.1 et seq.) to require that wells be resurveyed to an accuracy of one-hundredth of a second latitu and longitude. This shall not be considered to be a major modification of the N.J.P.D.E.S. permit.

CDM Federal Programs Corporation

Double-Cased Monitoring Well

Client:	U.S. Environmental Protection Agency	Well No.:	CCWD MW-2D
Site Name:	Puchack Well Field (3220-002)	Location:	Merion
Project Location:	Pennsauken, New Jersey	Drilling Date(s):	8/31 - 9/7
Drilling Contractor:	Uni-Tech Drilling Co.	Initial Water Level (ft. bgs):	
Drill Rig:	FAILING CF 1500	Geologist:	M. ALBAR
Drilling Method:	MUD ROTARY	North: / East:	Elevation (ft.amsl):
		Depth to Bottom (ft. bgs):	305' 255'

Annular Space Details

Type of Surface Seal:

Type of Annular Grout: CEMENT/BENTONITE

Type of Seal: NO. 00 SAND

Type of Filter Pack: NO. 1 SAND

Type of Backfill: NO. 1 SAND

Well Construction Materials

	Diameter	Type of Material
Screen	4"	PVC SCH 40
Riser Casing	4"	PVC SCH 40
Flush Mount Type		

Measurements

Outer Casing Depth (ft. bgs)	177
Riser pipe length (ft)	240
Screen length (ft)	10
Screen slot size (in)	0.010
Depth to water (ft. bgs)	67.0
Depth to bedrock (ft. bgs)	302

Designed by: DICK WALKER

Affiliation: USGS

REMARKS:

RL Walker USGS 9/7/00

NOT TO SCALE

Depths - (feet below ground surface)

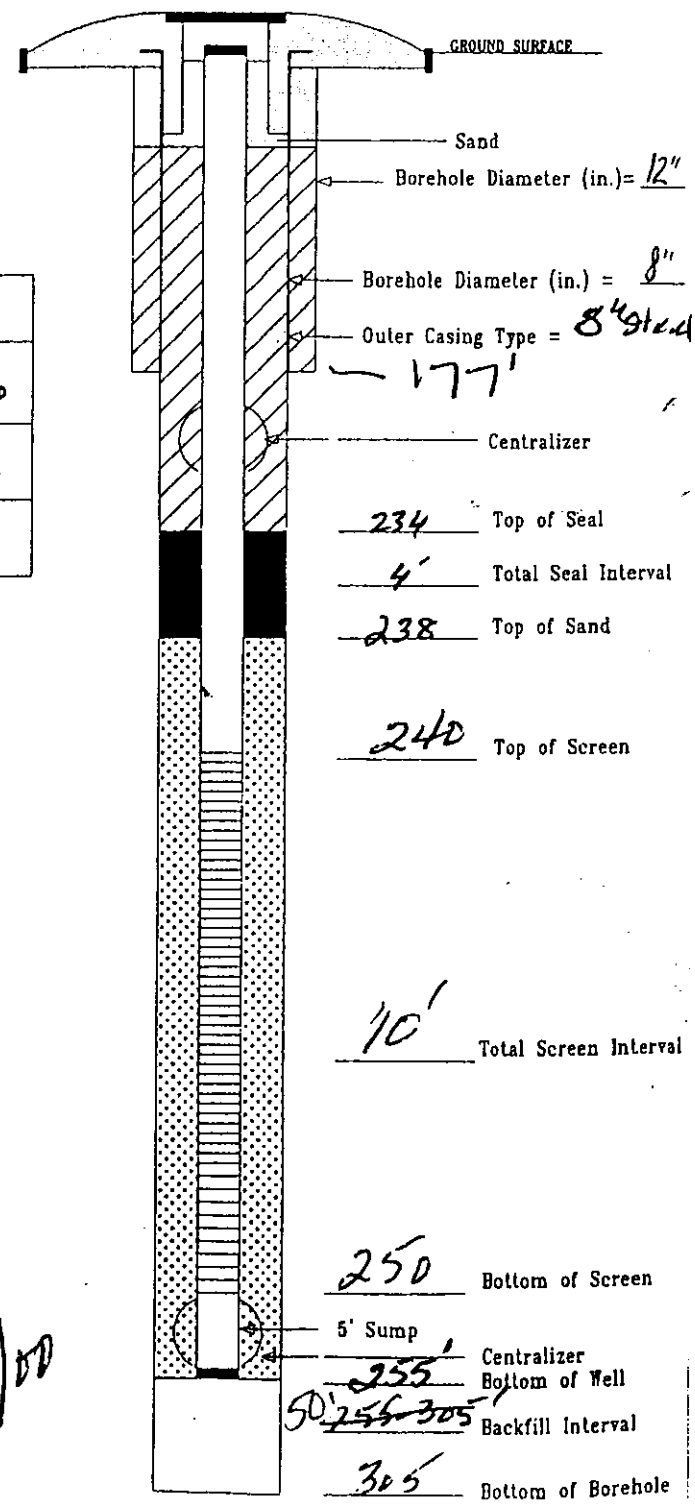

DOUBLE-FORM PUCHACK.GPJ FEDERAL.GDT 6/28/00

DWR-138 M
11/98

New Jersey Department of Environmental Protection
Bureau of Water Allocation

MONITORING WELL RECORD

Well Permit No. 31 - 58585

Atlas Sheet Coordinates 31 : 02 289

OWNER IDENTIFICATION - Owner WORLD HARVEST CHRISTIAN
Address 7201 WESTFIELD AVE.
City PENNSAUKEN State NJ Zip Code

WELL LOCATION - If not the same as owner please give address. Owner's Well No. CCWDMW-2D
County CAMDEN Municipality PENNSAUKEN TWP Lot No. 44 Block No. 1104
Address DETOUSSE AVE.
DATE WELL STARTED 8/31/00
DATE WELL COMPLETED 1/4/01

TYPE OF WELL (as per Well Permit Categories) MONITORING
Regulatory Program Requiring Well Case I.D.#

CONSULTING FIRM/FIELD SUPERVISOR (if applicable) CDM Federal Programs Tele. # 212-785-9123

WELL CONSTRUCTION

Total depth drilled 305 ft.
Well finished to 255 ft.

Borehole diameter:
Top 13 in.
Bottom 8 in.

Well was finished: ☐ above grade ☒ flush mounted

If finished above grade, casing height (stick up) above land surface ____ ft.

Was steel protective casing installed? ☒ Yes ☐ No

Static water level after drilling 72.8 ft.

Water level was measured using WLI

Well was developed for 7 hours at 10 gpm

Method of development Airlift/Submersible

Was permanent pumping equipment installed? ☐ Yes ☒ No

Pump capacity N/A gpm

Pump type: N/A

Drilling Fluid Bentonite Type of Rig F-1500

Health and Safety Plan submitted? ☒ Yes ☐ No

Level of Protection used on site (circle one) None (D) C B A

I certify that I have constructed the above referenced well in accordance with all well permit requirements and applicable State rules and regulations.

Drilling Company UNI-TECH DRILLING

Well Driller (Print) Karl Hitzelberger

Driller's Signature Karl Hitzelberger

Registration No. M1530 Date 4/30/01

Note: Measure all depths from land surface	Depth to Top (ft.)	Depth to Bottom (ft.)	Diameter (inches)	Material	Wgt./Rating (lbs/sch no.)
Single/Inner Casing	0	240	4	PVC	40
Middle Casing (for triple cased wells only)					
Outer Casing (largest diameter)	0	177	8	Steel	40 23#/Ft
Open Hole or Screen (No. Used .010)	240	250	4	PVC	40
Blank Casings (No. Used)					
Tail Piece	250	255	4	PVC	40
Gravel Pack	234	305	8	#1	
Grout	0	177	13	Neat Cement	14500 lbs.
	0	234	8	Bentonite	____ lbs.

Grouting Method Pressure Tremie
Drilling Method Mud Rotary

GEOLOGIC LOG

Note each depth where water was encountered in consolidated formations.

0 - 128' CMF Sand Yellow w/small lenses of clay
128' - 145' Red Clay
145' - 170' MF Sand w/clay lenses
170' - 188' Clay w/ F sand
188' - 232' FMC Sand w/clay lenses
232' - 270' Coarse sand and large gravel
270' - 304' Clay w/mica shist/Decomposed rock

COPIES: White - DEP Canary - Driller Pink - Owner Goldenrod - Health Dept.

THIS FORM MUST BE COMPLETED BY THE PERMITTEE OR HIS/HER AGENT

GROUND WATER MONITORING WELL CERTIFICATION - FORM B - LOCATION CERTIFICATION

Name of Permittee: U.S. Environmental Protection Agency
Name of Facility: Puchack Well Field Superfund Site
Location: Pennsauken Township, New Jersey
NJPDES Number:

LAND SURVEYOR'S CERTIFICATION

Well Permit Number (As assigned by NJDEP's Bureau of Water Allocation): 31-58585-
This number must be permanently affixed to the well casing.
Datum: NAD 1983 Horizontal - NGVD 1929 Vertical
Longitude (one-tenth of a second): West 75° 02' 53.5"
Latitude (one-tenth of a second): North 39° 58' 15.6"

North 414827.3'
East 338491.8'

Elevation of Top of Casing (cap off) (one-hundredth of a foot): WC = 57.52' IC = 57.18' GR= 57.52'
Owners Well Number (As shown on application or plans): CCWDMW-2D

BENCHMARK - NGS Monument "D 100"
GEOGRAPHIC POSITION - North 39° 58' 25"
West 75° 03' 37"
DATE OF SURVEY - June, 2001

ELEVATION - 44.55'

AUTHENTICATION

I certify under penalty of law that I have personally examined and am familiar with the information submitted in this document and all attachments and that, based on my inquiry of those individuals immediately responsible for obtaining the information, I believe the submitted information is true, accurate and complete. I am aware that there are significant penalties for submitting false information including the possibility of fine and imprisonment.

Paul J Emilius Jr.

PROFESSIONAL LAND SURVEYOR'S SIGNATURE

Paul J. Emilius, Jr.
PROFESSIONAL LAND SURVEYOR'S NAME
(Please print or type)

SEAL

New Jersey P.L.S. License No. 37186
PROFESSIONAL LAND SURVEYOR'S LICENSE #

The Department reserves the right in cases of violation of permit specified ground water limits or Ground Water Qu Standards (N.J.A.C. 7:9-6.1 et seq.) to require that wells be resurveyed to an accuracy of one-hundredth of a second latitude and longitude. This shall not be considered to be a major modification of the N.J.P.D.E.S. permit.

formb.doc

Double-Cased Monitoring Well

CDM Federal Programs Corporation

Client: U.S. Environmental Protection Agency
Site Name: Puchack Well Field (3220-002)
Project Location: Pennsauken, New Jersey
Drilling Contractor: Uni-Tech Drilling Co.
Drill Rig: FAILING 1500
Drilling Method: MUD ROTARY

Well No.: MW-32
Location: Westfield Ave
Drilling Date(s): 2/7-13/01
Initial Water Level (ft. bgs):
Geologist: L. Campbell/M. Akbar
North: East: Elevation (ft.amsl):
Depth to Bottom (ft. bgs): ~~212~~ 209

Annular Space Details

Type of Surface Seal:
Type of Annular Grout: Portland Type II CEMENT/BENTONITE
Type of Seal: Filter Pro NO. 00 SAND
Type of Filter Pack: Filter Pro NO. 1 SAND
Type of Backfill: Filter Pro No 1 Sand

Well Construction Materials

	Diameter	Type of Material
Screen	4"	PVC SCH 40
Riser Casing	4"	PVC SCH 40
Flush Mount Type		

Measurements

Outer Casing Depth (ft. bgs)	151
Riser pipe length (ft)	194
Screen length (ft)	10
Screen slot size (in)	0.010
Depth to water (ft. bgs)	
Depth to bedrock (ft. bgs)	

Designed by: DICK WALKER
Affiliation: USGS

REMARKS:

NOT TO SCALE

Depths - (feet below ground surface)

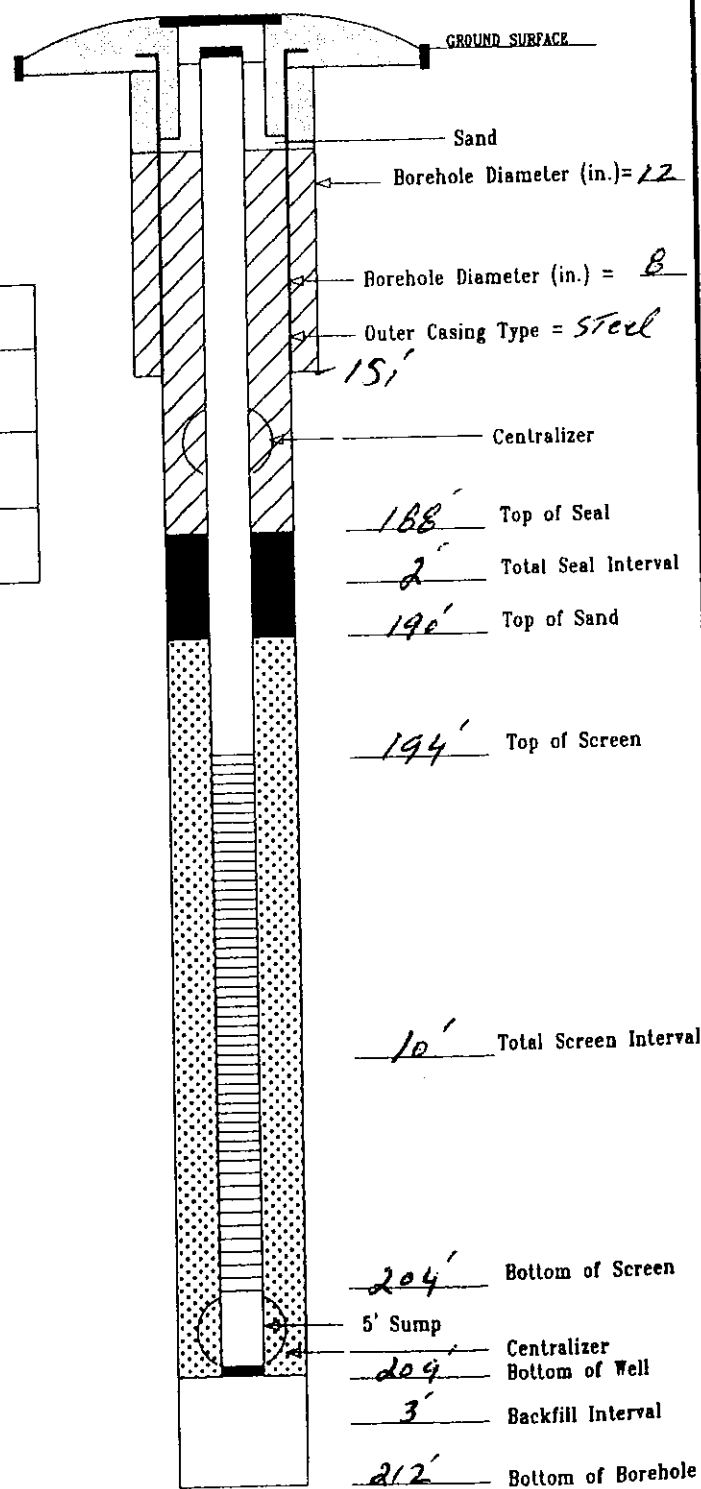

DOUBLE-FORM PUCHACK.GPJ FEDERAL.GDT 6/28/00

DWR-138 M
11/98

New Jersey Department of Environmental Protection
Bureau of Water Allocation

MONITORING WELL RECORD

Well Permit No. 31 - 59988

Atlas Sheet Coordinates 31 02 287

OWNER IDENTIFICATION - Owner PENNSAUKEN TOWNSHIP
Address 5405 N. CRESCENT BLVD.
City PENNSAUKEN State NJ Zip Code

WELL LOCATION - If not the same as owner please give address. Owner's Well No. MW-3I
County CAMDEN Municipality PENNSAUKEN TWP Lot No. NA Block No. NA
Address BETHEL AVENUE

DATE WELL STARTED 2/7/01
DATE WELL COMPLETED 2/13/01

TYPE OF WELL (as per Well Permit Categories) MONITORING
Regulatory Program Requiring Well Case I.D.#

CONSULTING FIRM/FIELD SUPERVISOR (if applicable) CDM Federal Programs Tele. #

WELL CONSTRUCTION

Total depth drilled 212 ft.
Well finished to 209' ft.

Borehole diameter:
Top 12 in.
Bottom 8 in.

Well was finished: ☐ above grade ☒ flush mounted

If finished above grade, casing height (stick up) above land surface ____ ft.

Was steel protective casing installed? ☒ Yes ☐ No

Static water level after drilling 90.4 ft.

Water level was measured using M-Scope

Well was developed for 4 hours at 25 gpm

Method of development Submersible

Was permanent pumping equipment installed? ☐ Yes ☒ No

Pump capacity NA gpm

Pump type: NA

Drilling Fluid Bentonite Type of Rig Failing 1500

Health and Safety Plan submitted? ☒ Yes ☐ No

Level of Protection used on site (circle one) None (D) C B A

Note: Measure all depths from land surface	Depth to Top (ft.)	Depth to Bottom (ft.)	Diameter (inches)	Material	Wgt./Rating (lbs/sch no.)
Single/Inner Casing	0	194	4"	PVC	Sch 40
Middle Casing (for triple cased wells only)					
Outer Casing (largest diameter)	0	151	8"	Steel	Sch 40
Open Hole or Screen (No. Used .010)	194	204	4"	PVC	Sch 40
Blank Casings (No. Used)					
Tail Piece					
Gravel Pack	188	212		#1 Morie	
Grout	0 0	151 188		Neat Cement Bentonite	1200 lbs. 240 lbs.

Grouting Method Pressure Tremie
Drilling Method Mud Rotary

GEOLOGIC LOG

Note each depth where water was encountered in consolidated formations.

0-128' CMF sand and gravel
128-138' Red clay
138-189' MC sand
189-212 Coarse sand & large gravel

I certify that I have constructed the above referenced well in accordance with all well permit requirements and applicable State rules and regulations.

Drilling Company UNI-TECH DRILLING

Well Driller (Print) Karl Hitzelberger

Driller's Signature Karl Hitzelberger

Registration No. M530 Date 7/6/01

COPIES: White - DEP Canary - Driller Pink - Owner Goldenrod - Health Dept.

THIS FORM MUST BE COMPLETED BY THE PERMITTEE OR HIS/HER AGENT

GROUND WATER MONITORING WELL CERTIFICATION - FORM B - LOCATION CERTIFICATION

Name of Permittee: U.S. Environmental Protection Agency
Name of Facility: Puchack Well Field Superfund Site
Location: Pennsauken Township, New Jersey
NJPDES Number:

LAND SURVEYOR'S CERTIFICATION

Well Permit Number (As assigned by NJDEP's Bureau of Water Allocation): 31-59988-
This number must be permanently affixed to the well casing.
Datum: NAD 1983 Horizontal - NGVD 1929 Vertical
Longitude (one-tenth of a second): West 75° 03' 05.4"
Latitude (one-tenth of a second): North 39° 58' 01.7"

North 413420.4'
East 337558.3'

Elevation of Top of Casing (cap off) (one-hundredth of a foot): WC = 77.58' IC = 77.22' GR= 77.57'
Owners Well Number (As shown on application or plans): MW-3I

BENCHMARK - NGS Monument "D 100" **ELEVATION** - 44.55'
GEOGRAPHIC POSITION - North 39° 58' 25"
West 75° 03' 37"
DATE OF SURVEY - June, 2001

AUTHENTICATION

I certify under penalty of law that I have personally examined and am familiar with the information submitted in this document and all attachments and that, based on my inquiry of those individuals immediately responsible for obtaining the information, I believe the submitted information is true, accurate and complete. I am aware that there are significant penalties for submitting false information including the possibility of fine and imprisonment.

Paul J Emilius Jr.

PROFESSIONAL LAND SURVEYOR'S SIGNATURE

Paul J. Emilius, Jr.
PROFESSIONAL LAND SURVEYOR'S NAME
(Please print or type)

SEAL

New Jersey P.L.S. License No. 37186
PROFESSIONAL LAND SURVEYOR'S LICENSE #

The Department reserves the right in cases of violation of permit specified ground water limits or Ground Water Qu Standards (N.J.A.C. 7:9-6.1 et seq.) to require that wells be resurveyed to an accuracy of one-hundredth of a second lat. and longitude. This shall not be considered to be a major modification of the N.J.P.D.E.S. permit.

formb.doc

Double-Cased Monitoring Well

CDM Federal Programs Corporation

Client:	U.S. Environmental Protection Agency	Well No.:	CCMD-MW 4.I
Site Name:	Puchack Well Field (3220-002)	Location:	Deronne Ave
Project Location:	Pennsauken, New Jersey	Drilling Date(s):	8-9-00 - 8.15.00
Drilling Contractor:	Uni-Tech Drilling Co.	Initial Water Level (ft. bgs):	
Drill Rig:	Failing CF 1500	Geologist:	Lisa Campbell
Drilling Method:	Mud Rotary	North: East:	Elevation (ft.amsl):
		Depth to Bottom (ft. bgs):	150'

Annular Space Details

Type of Surface Seal:

Type of Annular Grout: Portland Type II cement / bentonite grout ~~cement~~

Type of Seal: FilterPro #00 sand

Type of Filter Pack: FilterPro #1 Sand

Type of Backfill: N/A

Well Construction Materials

	Diameter	Type of Material
Screen	4"	Schedule 40 PVC
Riser Casing	4"	Schedule 40 PVC
Flush Mount Type		

Measurements

Outer Casing Depth (ft. bgs)	125'
Riser pipe length (ft)	135'
Screen length (ft)	10'
Screen slot size (in)	0.010
Depth to water (ft. bgs)	
Depth to bedrock (ft. bgs)	N/A

Designed by: Dick Walker

Affiliation: USGS

REMARKS: Staked 8' off Rd. R L Walker 8/9/00

3 in Spoon @ 140' ± for CLP

NOT TO SCALE

Depths - (feet below ground surface)

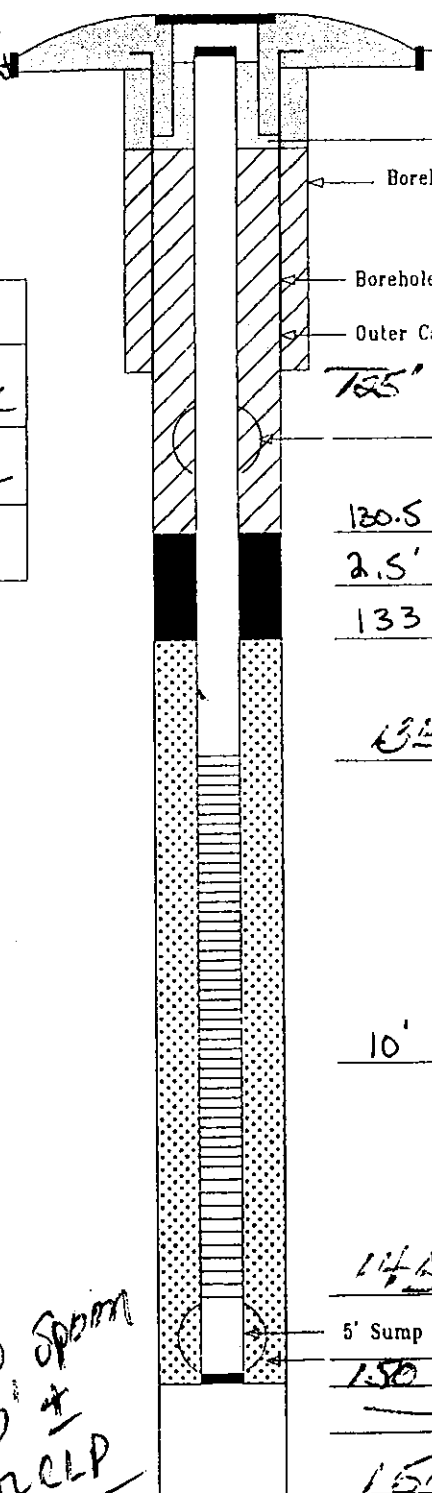

DOUBLE-FORM PUCHACK.GPJ FEDERAL.GDT 6/28/00

DWR-138 M
11/98

New Jersey Department of Environmental Protection
Bureau of Water Allocation

MONITORING WELL RECORD

Well Permit No. 31 - 58636

Atlas Sheet Coordinates 31 : 02 : 281

OWNER IDENTIFICATION - Owner PENNSAUKEN TOWNSHIP
Address 5605 CRESCENT BLVD.
City PENNSAUKEN State NJ Zip Code

WELL LOCATION - If not the same as owner please give address. Owner's Well No. CCWD MW - 4I
County CAMDEN Municipality PENNSAUKEN TWP Lot No. 9 Block No. 1317
Address DEROUSSE AVENUE

DATE WELL STARTED 8/9/00
DATE WELL COMPLETED 8/15/00

TYPE OF WELL (as per Well Permit Categories) MONITORING
Regulatory Program Requiring Well Case I.D.#

CONSULTING FIRM/FIELD SUPERVISOR (if applicable) CDM Federal Programs Tele. # 212-785-9123

WELL CONSTRUCTION

Total depth drilled 150' ft.
Well finished to 150' ft.

Borehole diameter:
Top 12 in.
Bottom 8 in.

Well was finished: ☐ above grade
☒ flush mounted

If finished above grade, casing height (stick up) above land surface ____ ft.

Was steel protective casing installed?
☒ Yes ☐ No

Static water level after drilling 66.98 ft.

Water level was measured using M-Scope

Well was developed for 4 hours
at 25 gpm

Method of development Submersible

Was permanent pumping equipment installed? ☐ Yes ☒ No

Pump capacity NA gpm

Pump type: NA

Drilling Fluid Bentonite Type of Rig Failing 1500

Health and Safety Plan submitted? ☒ Yes ☐ No

Level of Protection used on site (circle one) None D C B A

Note: Measure all depths from land surface	Depth to Top (ft.)	Depth to Bottom (ft.)	Diameter (inches)	Material	Wgt./Rating (lbs/sch no.)
Single/Inner Casing	0	135	4"	PVC	Sch 40
Middle Casing (for triple cased wells only)					
Outer Casing (largest diameter)	0	125	8"	Steel	
Open Hole or Screen (No. Used .010)	135	145	4"	PVC	Sch 40
Blank Casings (No. Used)					
Tail Piece					
Gravel Pack	130.5	150	#	#1 Morie	
Grout	0 0	125 130.5		Neat Cement Bentonite	8000 lbs. 200 lbs.

Grouting Method Pressure Tremie
Drilling Method Mud Rotary

GEOLOGIC LOG

Note each depth where water was encountered in consolidated formations.

0-128 CMF Sand and gravel
128-138 Red clay
138-150' CMF sand trace clay

I certify that I have constructed the above referenced well in accordance with all well permit requirements and applicable State rules and regulations.

Drilling Company UNI TECH DRILLING

Well Driller (Print) Karl Hitzelberger

Driller's Signature Karl Hitzelberger

Registration No. M1530 Date 7/6/01

COPIES: White - DEP Canary - Driller Pink - Owner Goldenrod - Health Dept.

THIS FORM MUST BE COMPLETED BY THE PERMITTEE OR HIS/HER AGENT

GROUND WATER MONITORING WELL CERTIFICATION - FORM B - LOCATION CERTIFICATION

Name of Permittee: U.S. Environmental Protection Agency
Name of Facility: Puchack Well Field Superfund Site
Location: Pennsauken Township, New Jersey
NJPDES Number:

LAND SURVEYOR'S CERTIFICATION

Well Permit Number (As assigned by NJDEP's Bureau of Water Allocation): 31-58636-
This number must be permanently affixed to the well casing.
Datum: NAD 1983 Horizontal - NGVD 1929 Vertical
Longitude (one-tenth of a second): West 75° 03' 12.5"
Latitude (one-tenth of a second): North 39° 58' 27.2"

North 416011.8'
East 337022.0'

Elevation of Top of Casing (cap off) (one-hundredth of a foot): WC = 55.56' IC = 54.92' GR= 55.56'
Owners Well Number (As shown on application or plans): CCWDMW-4I

BENCHMARK - NGS Monument "D 100" **ELEVATION** - 44.55'
GEOGRAPHIC POSITION - North 39° 58' 25"
West 75° 03' 37"
DATE OF SURVEY - June, 2001

AUTHENTICATION

I certify under penalty of law that I have personally examined and am familiar with the information submitted in this document and all attachments and that, based on my inquiry of those individuals immediately responsible for obtaining the information, I believe the submitted information is true, accurate and complete. I am aware that there are significant penalties for submitting false information including the possibility of fine and imprisonment.

Paul J Emilius Jr.

PROFESSIONAL LAND SURVEYOR'S SIGNATURE

Paul J. Emilius, Jr.
PROFESSIONAL LAND SURVEYOR'S NAME
(Please print or type)

SEAL

New Jersey P.L.S. License No. 37186
PROFESSIONAL LAND SURVEYOR'S LICENSE #

The Department reserves the right in cases of violation of permit specified ground water limits or Ground Water Qu Standards (N.J.A.C. 7:9-6.1 et seq.) to require that wells be resurveyed to an accuracy of one-hundredth of a second lati and longitude. This shall not be considered to be a major modification of the N.J.P.D.E.S. permit.

formb.doc

CDM Federal Programs Corporation

Double-Cased Monitoring Well

Client:	U.S. Environmental Protection Agency	Well No.:	MW-6 I
Site Name:	Puchack Well Field (3220-002)	Location:	Velde & Boulevard
Project Location:	Pennsauken, New Jersey	Drilling Date(s):	9/12 - 9/14
Drilling Contractor:	Uni-Tech Drilling Co.	Initial Water Level (ft. bgs):	11.00
Drill Rig:	~~Mud Rotary~~ Failing 1500	Geologist:	M. AKBAR
Drilling Method:	Mud Rotary	North: East: Elevation (ft amsl):	
		Depth to Bottom (ft. bgs):	119 117

Annular Space Details

Type of Surface Seal:

Type of Annular Grout: Portland Type II CEMENT/BENTONITE

Type of Seal: Filter Pro NO. 00 SAND

Type of Filter Pack: Filter Pro NO. 1 SAND

Type of Backfill: Filter Pro NO. 1 SAND

Well Construction Materials

	Diameter	Type of Material
Screen	4"	PVC SCH 40
Riser Casing	4"	PVC SCH 40
Flush Mount Type		

Measurements

Outer Casing Depth (ft. bgs)	97
Riser pipe length (ft)	102
Screen length (ft)	10
Screen slot size (in)	0.010
Depth to water (ft. bgs)	
Depth to bedrock (ft. bgs)	

Designed by: DICK WALKER

Affiliation: USGS

REMARKS: RWalker 9/12/00

NOT TO SCALE

Depths – (feet below ground surface)

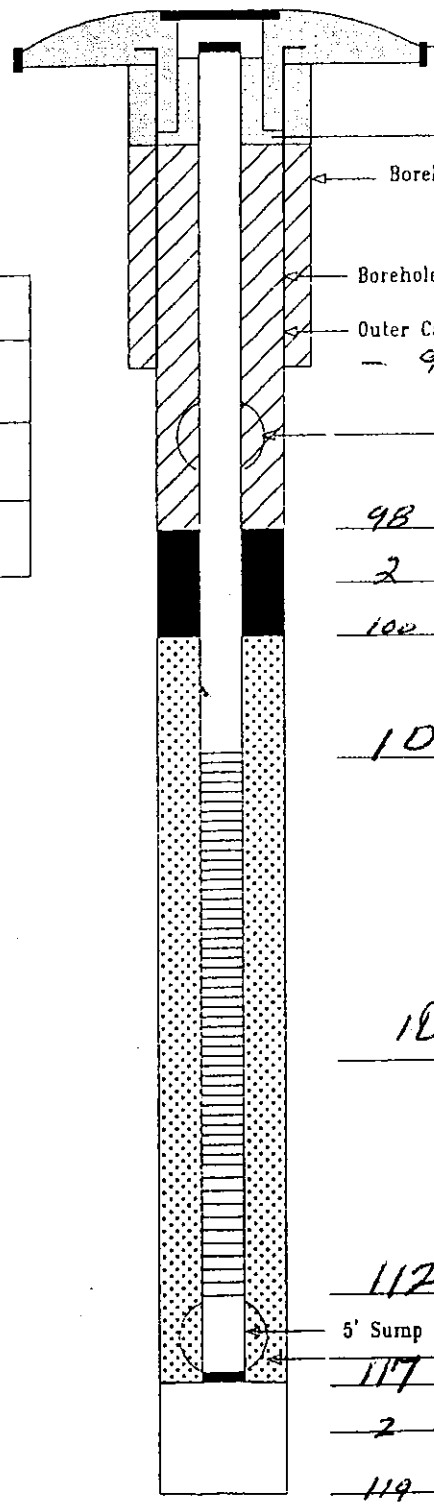

DOUBLE-FORM PUCHACK.CPJ FEDERAL.CDT 6/28/00

DWR-135
11/98

New Jersey Department of Environmental Protection
Bureau of Water Allocation

MONITORING WELL RECORD

Well Permit No. 31 - 58637

Atlas Sheet Coordinates 31 : 02 : 285

OWNER IDENTIFICATION - Owner PENNSAUKEN TOWNSHIP
Address 5605 CRESCENT BLVD.
City PENNSAUKEN State NJ Zip Code

WELL LOCATION - If not the same as owner please give address. Owner's Well No. MW 6 I
County CAMDEN Municipality PENNSAUKEN TWP Lot No. 22 Block No. 214
Address VELDE AVENUE

DATE WELL STARTED 9 / 11 / 00
DATE WELL COMPLETED 9 / 13 / 00

TYPE OF WELL (as per Well Permit Categories) MONITORING
Regulatory Program Requiring Well Case I.D.#

CONSULTING FIRM/FIELD SUPERVISOR (if applicable) CDM Federal Tele. # 212-785-9123

WELL CONSTRUCTION

Total depth drilled 119 ft.
Well finished to 117 ft.

Borehole diameter:
Top 12 in.
Bottom 8 in.

Well was finished: ☐ above grade ☒ flush mounted

If finished above grade, casing height (stick up) above land surface ____ ft.

Was steel protective casing installed? ☒ Yes ☐ No

Static water level after drilling 46 ft.

Water level was measured using M Scope

Well was developed for 4 hours at 25 gpm

Method of development Submersible

Was permanent pumping equipment installed? ☐ Yes ☒ No

Pump capacity NA gpm

Pump type:

Drilling Fluid Bentonite Type of Rig Failing CF 1500

Health and Safety Plan submitted? ☒ Yes ☐ No

Level of Protection used on site (circle one) None (D) C B A

Note: Measure all depths from land surface	Depth to Top (ft.)	Depth to Bottom (ft.)	Diameter (inches)	Material	Wgt./Rating (lbs/sch no.)
Single/Inner Casing	0	102	4"	PVC	Sch 40
Middle Casing (for triple cased wells only)					
Outer Casing (largest diameter)	0	97	8"	Steel	Sch 40
Open Hole or Screen (No. Used .010)	102	112	4"	PVC	Sch 40
Blank Casings (No. Used)					
Tail Piece					
Gravel Pack	98	119		#1 Sand	
Grout	0 0	97 98		Neat Cement Bentonite	12300 lbs. 250 lbs.

Grouting Method Pressure tremie
Drilling Method Mud Rotary

I certify that I have constructed the above referenced well in accordance with all well permit requirements and applicable State rules and regulations.

Drilling Company UNI-TECH DRILLING
Well Driller (Print) Karl Hitzelberger
Driller's Signature Karl Hitzelberger
Registration No. 011530 Date 7/6/01

GEOLOGIC LOG

Note each depth where water was encountered in consolidated formations.

0-24 CM yellow sand
24-84 CM yellow gray sand
84-104 gray sand and clay
104-119 very dense M-F sand

COPIES: White - DEP Canary - Driller Pink - Owner Goldenrod - Health Dept.

THIS FORM MUST BE COMPLETED BY THE PERMITTEE OR HIS/HER AGENT

GROUND WATER MONITORING WELL CERTIFICATION - FORM B - LOCATION CERTIFICATION

Name of Permittee: U.S. Environmental Protection Agency
Name of Facility: Puchack Well Field Superfund Site
Location: Pennsauken Township, New Jersey
NJPDES Number:

LAND SURVEYOR'S CERTIFICATION

Well Permit Number (As assigned by NJDEP's Bureau of Water Allocation): 31-58637-
This number must be permanently affixed to the well casing.
Datum: NAD 1983 Horizontal - NGVD 1929 Vertical
Longitude (one-tenth of a second): West 75° 03' 00.5"
Latitude (one-tenth of a second): North 39° 58' 27.2"

North 416002.5'
East 337954.4'

Elevation of Top of Casing (cap off) (one-hundredth of a foot): WC = 26.26' IC = 26.05' GR= 26.28'
Owners Well Number (As shown on application or plans): MW-6I

BENCHMARK - NGS Monument "D 100"
GEOGRAPHIC POSITION - North 39° 58' 25"
West 75° 03' 37"
DATE OF SURVEY - June, 2001

ELEVATION - 44.55'

AUTHENTICATION

I certify under penalty of law that I have personally examined and am familiar with the information submitted in this document and all attachments and that, based on my inquiry of those individuals immediately responsible for obtaining the information, I believe the submitted information is true, accurate and complete. I am aware that there are significant penalties for submitting false information including the possibility of fine and imprisonment.

Paul J Emilius Jr.

PROFESSIONAL LAND SURVEYOR'S SIGNATURE

Paul J. Emilius, Jr.
PROFESSIONAL LAND SURVEYOR'S NAME
(Please print or type)

SEAL

New Jersey P.L.S. License No. 37186
PROFESSIONAL LAND SURVEYOR'S LICENSE #

The Department reserves the right in cases of violation of permit specified ground water limits or Ground Water Qu Standards (N.J.A.C. 7:9-6.1 et seq.) to require that wells be resurveyed to an accuracy of one-hundredth of a second latituae and longitude. This shall not be considered to be a major modification of the N.J.P.D.E.S. permit.

formb.doc

8/10/00 → 8/24/00

CDM Federal Programs Corporation

Double-Cased Monitoring Well

Client: U.S. Environmental Protection Agency
Site Name: Puchack Well Field (3220-002)
Project Location: Pennsauken, New Jersey
Drilling Contractor: Uni-Tech Drilling Co.
Drill Rig: FAILING 1500
Drilling Method: Mud Rotary

Well No.: MW 11 D
Location: Pleasant Ave
Drilling Date(s): ~~08/10/00 8/22/00~~
Initial Water Level (ft. bgs):
Geologist: M AKBAR
North: East: Elevation (ft.amsl):
Depth to Bottom (ft. bgs): ~~314~~ 260'

Annular Space Details

Type of Surface Seal:
Type of Annular Grout: Portland Type II CEMENT/BENTONITE
Type of Seal: Filter Pro NO. 00 SAND
Type of Filter Pack: Filter Pro NO. 1 SAND
Type of Backfill: Filter Pro SAND & BENTONITE *

Well Construction Materials

	Diameter	Type of Material
Screen	4"	PVC SCH. 40
Riser Casing	4"	PVC SCH 40
Stick Up ~~Flush Mount~~ Type		

Measurements

Outer Casing Depth (ft. bgs)	190
Riser pipe length (ft)	245
Screen length (ft)	10
Screen slot size (in)	0.010
Depth to water (ft. bgs)	
Depth to bedrock (ft. bgs)	313

Designed by: DICK WALKER
Affiliation: USGS

REMARKS: * 260-265 : #1 sand
265-270 : #00 sand
270-314 : bentonite slurry
USGS
Richard D Walker
8/22/00

NOT TO SCALE

Depths - (feet below ground surface)

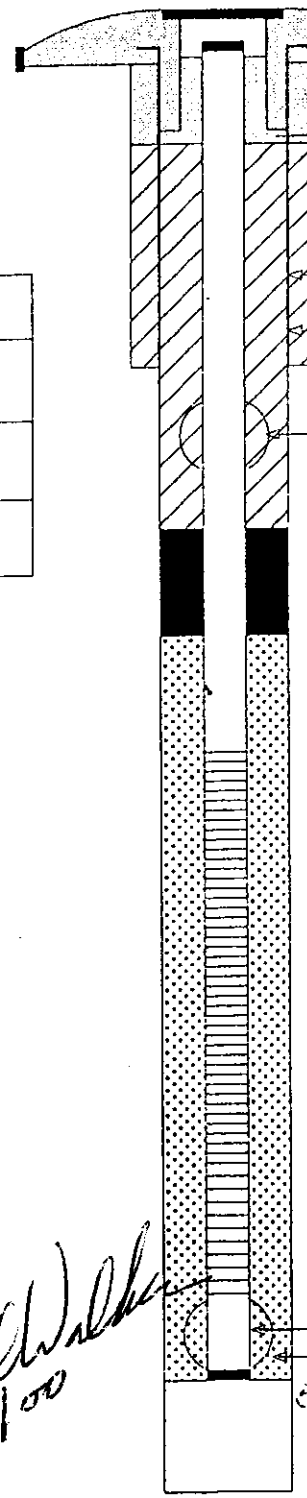

DOUBLE-FORM PUCHACK.GPJ FEDERAL.GDT 6/28/00

DWR-100M
11/98

New Jersey Department of Environmental Protection
Bureau of Water Allocation

MONITORING WELL RECORD

Well Permit No. 31 - 58583

Atlas Sheet Coordinates 31 : 02 206

OWNER IDENTIFICATION - Owner PENNSAUKEN TOWNSHIP
Address 5605 N. CRESCENT BLVD.
City PENNSAUKEN State NJ Zip Code

WELL LOCATION - If not the same as owner please give address. Owner's Well No. MW 11D
County CAMDEN Municipality PENNSAUKEN TWP Lot No. 35 Block No. 1407
Address PLEASANT AVE.
DATE WELL STARTED 8 / 15 / 00
DATE WELL COMPLETED 8 / 24 / 00

TYPE OF WELL (as per Well Permit Categories) MONITORING Case I.D.#
Regulatory Program Requiring Well

CONSULTING FIRM/FIELD SUPERVISOR (if applicable) CDM Federal Programs Tele. # 212-785-9123

WELL CONSTRUCTION

Total depth drilled 314 ft.
Well finished to 260 ft.

Borehole diameter:
Top 12 in.
Bottom 8 in.

Well was finished: [X] above grade
[ ] flush mounted

If finished above grade, casing height (stick up) above land surface 2.5 ft.

Was steel protective casing installed?
[X] Yes [ ] No

Static water level after drilling 73 ft.

Water level was measured using WLI

Well was developed for 25 hours
at 5 gpm

Method of development Airlift / Submersible

Was permanent pumping equipment installed? [ ] Yes [X] No

Pump capacity N/A gpm

Pump type: N/A

Drilling Fluid Bentonite Type of Rig F-1500

Health and Safety Plan submitted? [X] Yes [ ] No

Level of Protection used on site (circle one) None (D) C B A

Note: Measure all depths from land surface	Depth to Top (ft.)	Depth to Bottom (ft.)	Diameter (inches)	Material	Wgt./Rating (lbs/sch no.)
Single/Inner Casing	+2.5	245	4	PVC	40
Middle Casing (for triple cased wells only)					
Outer Casing (largest diameter)	0	190	8	Steel	3/40 28lbs/ft
Open Hole or Screen (No. Used)	245	255	4	PVC	40
Blank Casings (No. Used)					
Tail Piece	255	260	4	PVC	40
Gravel Pack	239	314	8	#1	2300 ±
Grout	0 0	190 239		Neat Cement Bentonite	16,500 lbs. 500 lbs.

Grouting Method Pressure Tremie
Drilling Method Mud Rotary

GEOLOGIC LOG

Note each depth where water was encountered in consolidated formations.

0-120 CMF Sand & Gravel
128-138 Red Clay
138-188 CMF Sand w/ clay lenses
188-192 Gray clay
192-220 CMF Sand w/ Clay lenses
220-288 Large gravel and Sand
288-314 Micaschist decomposed rock

I certify that I have constructed the above referenced well in accordance with all well permit requirements and applicable State rules and regulations.

Drilling Company UNI TECH DRILLING
Well Driller (Print) Karl Hitzelberger
Driller's Signature Karl Hitzelberger
Registration No. M1530 Date 7/6/01

COPIES: White - DEP Canary - Driller Pink - Owner Goldenrod - Health Dept.

THIS FORM MUST BE COMPLETED BY THE PERMITTEE OR HIS/HER AGENT

GROUND WATER MONITORING WELL CERTIFICATION - FORM B - LOCATION CERTIFICATION

Name of Permittee: U.S. Environmental Protection Agency
Name of Facility: Puchack Well Field Superfund Site
Location: Pennsauken Township, New Jersey
NJPDES Number:

LAND SURVEYOR'S CERTIFICATION

Well Permit Number (As assigned by NJDEP's Bureau of Water Allocation): 31-58583-
This number must be permanently affixed to the well casing.
Datum: NAD 1983 Horizontal - NGVD 1929 Vertical
Longitude (one-tenth of a second): West 75° 02' 43.8"
Latitude (one-tenth of a second): North 39° 58' 25.6"

North 415831.7'
East 339251.7'

Elevation of Top of Casing (cap off) (one-hundredth of a foot): WC = 64.23' IC = 63.79' GR= 61.95'
Owners Well Number (As shown on application or plans): MW-11D

BENCHMARK - NGS Monument "D 100"
GEOGRAPHIC POSITION - North 39° 58' 25"
West 75° 03' 37"
DATE OF SURVEY - June, 2001

ELEVATION - 44.55'

AUTHENTICATION

I certify under penalty of law that I have personally examined and am familiar with the information submitted in this document and all attachments and that, based on my inquiry of those individuals immediately responsible for obtaining the information, I believe the submitted information is true, accurate and complete. I am aware that there are significant penalties for submitting false information including the possibility of fine and imprisonment.

Paul J Emilius Jr.

PROFESSIONAL LAND SURVEYOR'S SIGNATURE

Paul J. Emilius, Jr.
PROFESSIONAL LAND SURVEYOR'S NAME
(Please print or type)

SEAL

New Jersey P.L.S. License No. 37186
PROFESSIONAL LAND SURVEYOR'S LICENSE #

The Department reserves the right in cases of violation of permit specified ground water limits or Ground Water Qu Standards (N.J.A.C. 7:9-6.1 et seq.) to require that wells be resurveyed to an accuracy of one-hundredth of a second lat and longitude. This shall not be considered to be a major modification of the N.J.P.D.E.S. permit.

formb.doc

CDM Federal Programs Corporation

Double-Cased Monitoring Well

Client: U.S. Environmental Protection Agency
Site Name: Puchack Well Field (3220-002)
Project Location: Pennsauken, New Jersey
Drilling Contractor: Uni-Tech Drilling Co.
Drill Rig: FAILING 1500
Drilling Method: MUD ROTARY

Well No.: MW-11 I
Location: Pleasant Ave
Drilling Date(s): 8/25/00 to 8/29/00
Initial Water Level (ft. bgs): 73.7
Geologist: M. Akbar
North: East: Elevation (ft.amsl):
Depth to Bottom (ft. bgs): 167.5

Annular Space Details

Type of Surface Seal:
Type of Annular Grout: Portland Type II CEMENT/BENTONITE
Type of Seal: Filkrite NO. 00 SAND
Type of Filter Pack: Filkrite NO. 1 SAND
Type of Backfill: NA

Well Construction Materials

	Diameter	Type of Material
Screen	4"	PVC SCH. 40
Riser Casing	4"	PVC SCH 40
Stick Up ~~Flush Mount~~ Type		

Measurements

Outer Casing Depth (ft. bgs)	128
Riser pipe length (ft)	157
Screen length (ft)	10
Screen slot size (in)	0.010
Depth to water (ft. bgs)	73.6
Depth to bedrock (ft. bgs)	

Designed by: Contact USGS for 3" Sample in Screen Interval
Affiliation:

REMARKS: Thin Clay below will Not permit installation of 5' Sump
RPWalker USGS

NOT TO SCALE

Depths – (feet below ground surface)

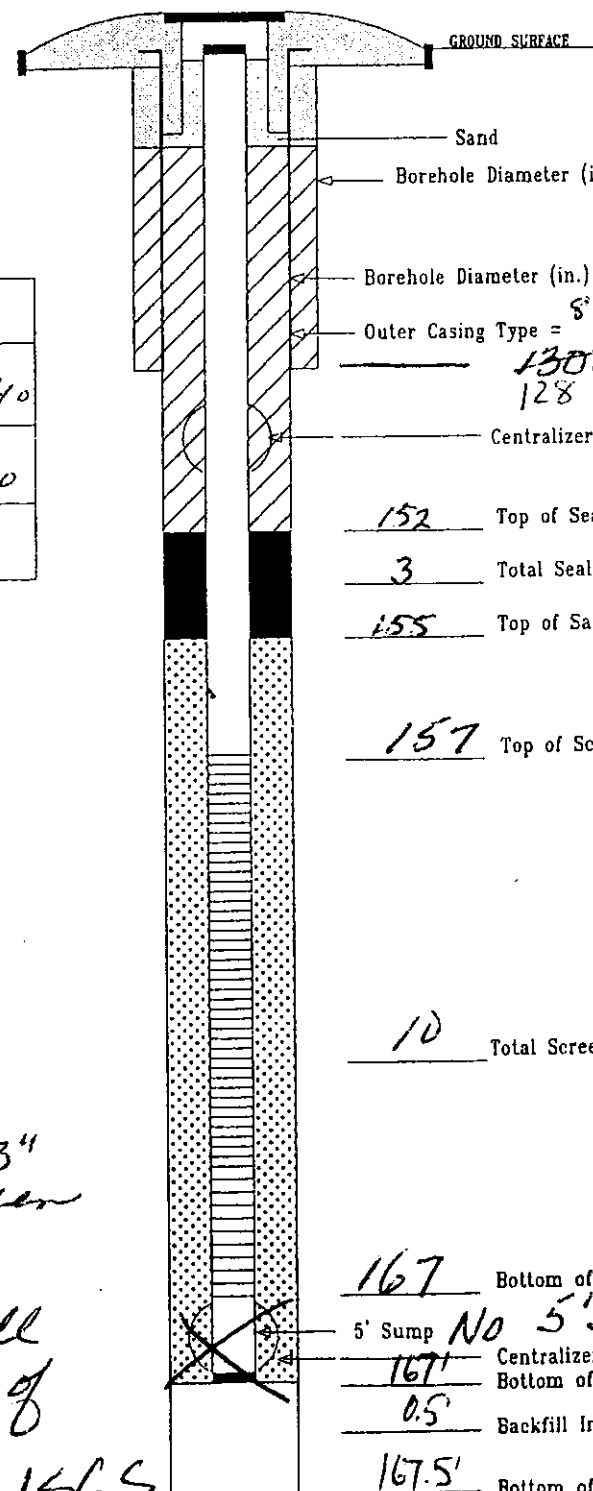

DOUBLE-FORM PUCHACK.GPJ FEDERAL.GDT 6/28/00

DWR 188M
11/98

New Jersey Department of Environmental Protection
Bureau of Water Allocation

MONITORING WELL RECORD

Well Permit No. 31 - 58584

Atlas Sheet Coordinates 31 - 02 - 206

OWNER IDENTIFICATION - Owner PENNSAUKEN TOWNSHIP
Address 5605 N. CRESCENT BLVD.
City PENNSAUKEN State NJ Zip Code

WELL LOCATION - If not the same as owner please give address. Owner's Well No. MW 11I
County CAMDEN Municipality PENNSAUKEN TWP Lot No. 35 Block No. 1407
Address PLEASANT AVE.
DATE WELL STARTED 8/25/00
DATE WELL COMPLETED 8/29/00

TYPE OF WELL (as per Well Permit Categories) MONITORING
Regulatory Program Requiring Well Case I.D.#

CONSULTING FIRM/FIELD SUPERVISOR (if applicable) CDM Federal Programs Tele. # 212-785-9123

WELL CONSTRUCTION

Total depth drilled 167.5 ft.
Well finished to 167 ft.

Borehole diameter:
Top 13 in.
Bottom 8 in.

Well was finished: ☐ above grade
☒ flush mounted

If finished above grade, casing height (stick up) above land surface ____ ft.

Was steel protective casing installed?
☒ Yes ☐ No

Static water level after drilling 73.6 ft.

Water level was measured using WLT

Well was developed for 5 hours
at 10 gpm

Method of development Airlift / Submersible

Was permanent pumping equipment installed? ☐ Yes ☒ No

Pump capacity N/A gpm

Pump type: N/A

Drilling Fluid Bentonite Type of Rig F-1500

Health and Safety Plan submitted? ☒ Yes ☐ No

Level of Protection used on site (circle one) None (D) C B A

Note: Measure all depths from land surface	Depth to Top (ft.)	Depth to Bottom (ft.)	Diameter (inches)	Material	Wgt./Rating (lbs/sch no.)
Single/Inner Casing	0	151	4	PVC	40
Middle Casing (for triple cased wells only)					
Outer Casing (largest diameter)	0	128	8	Steel	40 28 lbs/ft
Open Hole or Screen (No. Used 010)	151	167	4	PVC	40
Blank Casings (No. Used)					
Tail Piece					
Gravel Pack	152	167.5	8	#1 Morie	700 #
Grout	0 0	128 152		Neat Cement Bentonite	1100 lbs. 210 lbs.

Grouting Method Pressure Tremie
Drilling Method Mud Rotary

GEOLOGIC LOG

Note each depth where water was encountered in consolidated formations.

0-128 CDMF Sand & gravel
128-138 Red clay
138-167.5 CDMF Sand Trace of clay

I certify that I have constructed the above referenced well in accordance with all well permit requirements and applicable State rules and regulations.

Drilling Company UNI-TECH DRILLING

Well Driller (Print) Karl Hitzelberger

Driller's Signature Karl Hitzelberger

Registration No. M1530 Date 9/6/01

COPIES: White - DEP Canary - Driller Pink - Owner Goldenrod - Health Dept.

THIS FORM MUST BE COMPLETED BY THE PERMITTEE OR HIS/HER AGENT

GROUND WATER MONITORING WELL CERTIFICATION - FORM B - LOCATION CERTIFICATION

Name of Permittee: U.S. Environmental Protection Agency
Name of Facility: Puchack Well Field Superfund Site
Location: Pennsauken Township, New Jersey
NJPDES Number:

LAND SURVEYOR'S CERTIFICATION

Well Permit Number (As assigned by NJDEP's Bureau of Water Allocation): 31-58584-
This number must be permanently affixed to the well casing.
Datum: NAD 1983 Horizontal - NGVD 1929 Vertical
Longitude (one-tenth of a second): West 75° 02' 43.7"
Latitude (one-tenth of a second): North 39° 58' 25.5"

North 415824.0'
East 339263.2'

Elevation of Top of Casing (cap off) (one-hundredth of a foot): WC = 63.86' IC = 63.59' GR= 61.23'
Owners Well Number (As shown on application or plans): MW-11I

BENCHMARK - NGS Monument "D 100"
GEOGRAPHIC POSITION - North 39° 58' 25"
West 75° 03' 37"
DATE OF SURVEY - June, 2001

ELEVATION - 44.55'

AUTHENTICATION

I certify under penalty of law that I have personally examined and am familiar with the information submitted in this document and all attachments and that, based on my inquiry of those individuals immediately responsible for obtaining the information, I believe the submitted information is true, accurate and complete. I am aware that there are significant penalties for submitting false information including the possibility of fine and imprisonment.

Paul J Emilius Jr.

PROFESSIONAL LAND SURVEYOR'S SIGNATURE

Paul J. Emilius, Jr.
PROFESSIONAL LAND SURVEYOR'S NAME
(Please print or type)

SEAL

New Jersey P.L.S. License No. 37186
PROFESSIONAL LAND SURVEYOR'S LICENSE #

The Department reserves the right in cases of violation of permit specified ground water limits or Ground Water Qu Standards (N.J.A.C. 7:9-6.1 et seq.) to require that wells be resurveyed to an accuracy of one-hundredth of a second latituue and longitude. This shall not be considered to be a major modification of the N.J.P.D.E.S. permit.

formb.doc

CDM Federal Programs Corporation

Double-Cased Monitoring Well

Client:	U.S. Environmental Protection Agency	Well No.:	MW 12 D
Site Name:	Puchack Well Field (3220-002)	Location:	Finlaw & Grant
Project Location:	Pennsauken, New Jersey	Drilling Date(s):	7/25 TO 8/7/00
Drilling Contractor:	Uni-Tech Drilling Co.	Initial Water Level (ft. bgs):	
Drill Rig:	Failing CF 1500	Geologist:	M. Akbar
Drilling Method:	Mud Rotary	North: East:	Elevation (ft.amsl):
		Depth to Bottom (ft. bgs):	~~301~~ 260'

Annular Space Details

Type of Surface Seal:

Type of Annular Grout: CEMENT / BENTONITE

Type of Seal: NO. 00 SAND

Type of Filter Pack: NO. 1 SAND

Type of Backfill: See remarks

Well Construction Materials

	Diameter	Type of Material
Screen	4"	PVC SCH. 40
Riser Casing	4"	PVC SCH 40
Flush Mount Type		

Measurements

Outer Casing Depth (ft. bgs)	184
Riser pipe length (ft)	250
Screen length (ft)	10
Screen slot size (in)	0.010
Depth to water (ft. bgs)	
Depth to bedrock (ft. bgs)	298

Designed by: DICK WALKER

Affiliation: USGS

REMARKS: * backfill: 265-270: Filter Pk #1 Sand
270-301: bentonite slurry

Depths - (feet)

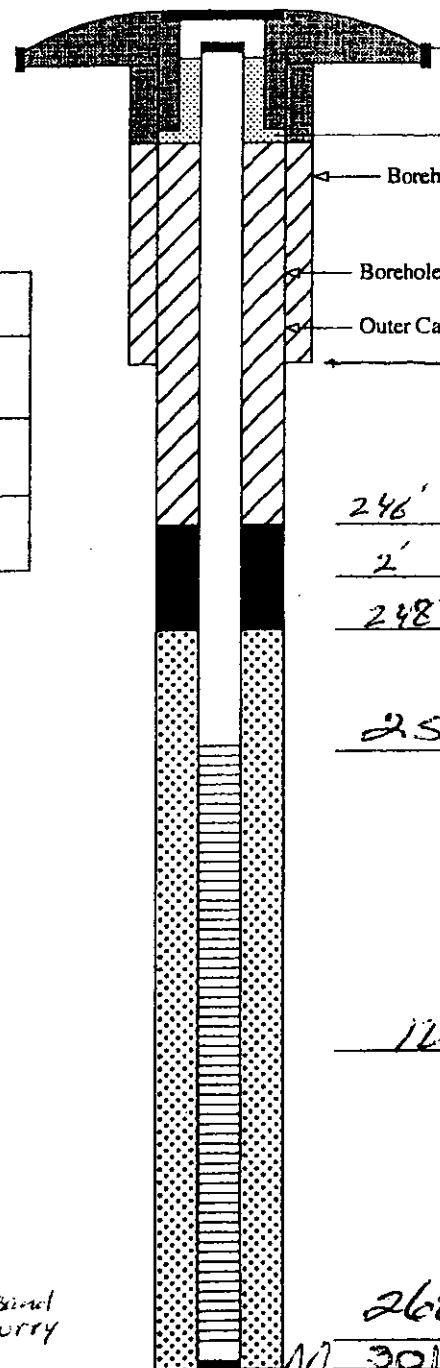

246' Top of Seal

2' Total Seal Interval

248' Top of Sand

250' Top of Screen

10' Total Screen Interval

260' Bottom of Screen

301' Bottom of Borehole

{bottom of well - 26
{backfill interval 36'

DOUBLE-FORM PUCHACK.GPJ FEDERAL.GDT 6/28/00

R C Walker USGS 8/7/00

DWR-136 M
11/98

New Jersey Department of Environmental Protection
Bureau of Water Allocation

MONITORING WELL RECORD

Well Permit No. 31 - 58576

Atlas Sheet Coordinates 31 : 02 : 523

OWNER IDENTIFICATION - Owner PENNSAUKEN TOWNSHIP
Address 5605 N. CRESCENT BLVD.
City PENNSAUKEN State NJ Zip Code

WELL LOCATION - If not the same as owner please give address. Owner's Well No. MW-12D
County CAMDEN Municipality PENNSAUKEN TWP Lot No. N/A Block No. N/A
Address FINLAW AVE AT GRANT

DATE WELL STARTED 7/25/00
DATE WELL COMPLETED 8/7/00

TYPE OF WELL (as per Well Permit Categories) MONITORING
Regulatory Program Requiring Well Case I.D.#

CONSULTING FIRM/FIELD SUPERVISOR (if applicable) CDM Federal Programs Tele.# 212-785-9123

WELL CONSTRUCTION

Total depth drilled 301 ft.
Well finished to 260 ft.

Borehole diameter:
Top 13 in.
Bottom 8 in.

Well was finished: ☐ above grade
☒ flush mounted

If finished above grade, casing height (stick up) above land surface ____ ft.

Was steel protective casing installed?
☒ Yes ☐ No

Static water level after drilling 53 ft.

Water level was measured using WLT

Well was developed for 30 hours at 15 gpm

Method of development Airlift/Submersible

Was permanent pumping equipment installed? ☐ Yes ☒ No

Pump capacity N/A gpm

Pump type: N/A

Drilling Fluid Bentonite Type of Rig CF 1500

Health and Safety Plan submitted? ☒ Yes ☐ No

Level of Protection used on site (circle one) None (D) C B A

Note: Measure all depths from land surface	Depth to Top (ft.)	Depth to Bottom (ft.)	Diameter (inches)	Material	Wgt./Rating (lbs/sch no.)
Single/Inner Casing	0	250	4	PVC	40
Middle Casing (for triple cased wells only)					
Outer Casing (largest diameter)	0	184	8	Steel	Sch 40 28 lbs/Ft
Open Hole or Screen (No. Used)	250	260	4	PVC	40
Blank Casings (No. Used)					
Tail Piece	260	265	4	PVC	40
Gravel Pack	246	270	8	#1	1000#
Grout	0	184 / 246	13/8	Neat Cement Bentonite	15040 lbs. 200 lbs.
	270	301			

Grouting Method Pressure Tremie
Drilling Method Mud Rotary

GEOLOGIC LOG

Note each depth where water was encountered in consolidated formations.

0-40' CMF sand
40' - 50' white sand w/clay
50' - 55' clay
55' - 85' white sand w/clay
85' - 96' clay
96' - 115' sand CMF
115' - 124' clay
124' - 146' sand w/lignite
146' - 152' clay
152' - 196' sand w/clay stringers
196' - 293' Coarse Sand, Segments
293' - 301' Decomposed Rock

I certify that I have constructed the above referenced well in accordance with all well permit requirements and applicable State rules and regulations.

Drilling Company UNI TECH DRILLING

Well Driller (Print) Karl Hitzelberger

Driller's Signature Karl Hitzelberger

Registration No. M1530 Date 9/6/01

COPIES: White - DEP Canary - Driller Pink - Owner Goldenrod - Health Dept.

THIS FORM MUST BE COMPLETED BY THE PERMITTEE OR HIS/HER AGENT

GROUND WATER MONITORING WELL CERTIFICATION - FORM B - LOCATION CERTIFICATION

Name of Permittee: U.S. Environmental Protection Agency
Name of Facility: Puchack Well Field Superfund Site
Location: Pennsauken Township, New Jersey
NJPDES Number:

LAND SURVEYOR'S CERTIFICATION

Well Permit Number (As assigned by NJDEP's Bureau of Water Allocation): 31-58576-
This number must be permanently affixed to the well casing.
Datum: NAD 1983 Horizontal - NGVD 1929 Vertical
Longitude (one-tenth of a second): West 75° 02' 30.9"
Latitude (one-tenth of a second): North 39° 57' 55.4"

North 412765.3'
East 340237.7'

Elevation of Top of Casing (cap off) (one-hundredth of a foot): WC = 33.03' IC = 32.70' GR= 33.04'
Owners Well Number (As shown on application or plans): MW-12D

BENCHMARK - NGS Monument "D 100"
GEOGRAPHIC POSITION - North 39° 58' 25"
West 75° 03' 37"
DATE OF SURVEY - June, 2001

ELEVATION - 44.55'

AUTHENTICATION

I certify under penalty of law that I have personally examined and am familiar with the information submitted in this document and all attachments and that, based on my inquiry of those individuals immediately responsible for obtaining the information, I believe the submitted information is true, accurate and complete. I am aware that there are significant penalties for submitting false information including the possibility of fine and imprisonment.

Paul J Emilius Jr.

PROFESSIONAL LAND SURVEYOR'S SIGNATURE

Paul J. Emilius, Jr.
PROFESSIONAL LAND SURVEYOR'S NAME
(Please print or type)

SEAL

New Jersey P.L.S. License No. 37186
PROFESSIONAL LAND SURVEYOR'S LICENSE #

The Department reserves the right in cases of violation of permit specified ground water limits or Ground Water Qu Standards (N.J.A.C. 7:9-6.1 et seq.) to require that wells be resurveyed to an accuracy of one-hundredth of a second latitude and longitude. This shall not be considered to be a major modification of the N.J.P.D.E.S. permit.

formb.doc

CDM Federal Programs Corporation

Single-Cased Monitoring Well

Client: U.S. Environmental Protection Agency
Site Name: Puchack Well Field (3220-002)
Project Location: Pennsauken, New Jersey
Drilling Contractor: Uni-Tech Drilling Co.
Drill Rig: Failing 1500
Drilling Method: Mud Rotary

Well No.: MW-12EAST-S
Location: Finlaw & Collins Av
Drilling Date(s): 1/4-10/01
Initial Water Level (ft. bgs):
Geologist: M. Akbar
North: East: Elevation (ft.amsl):
Depth to Bottom (ft. bgs): 122

Annular Space Details

Type of Surface Seal:
Type of Annular Grout: Portland Type II CEMENT/BENTONITE
Type of Seal: Filterfa NO. 00 SAND
Type of Filter Pack: Filterfa NO. 1 SAND
Type of Backfill: Filterfa NO. 1 SAND

Well Construction Materials

	Diameter	Type of Material
Screen	4"	PVC SCH 40
Riser Casing	4"	PVC SCH 40
Flush Mount Type		

Measurements

Riser pipe length (ft)	107
Screen length (ft)	10
Screen slot size (in)	0.010
Depth to water (ft. bgs)	
Depth to bedrock (ft. bgs)	

Designed by: Pierre Lacombe
Affiliation: USGS

REMARKS:

NOT TO SCALE

Depths - (feet below ground surface)

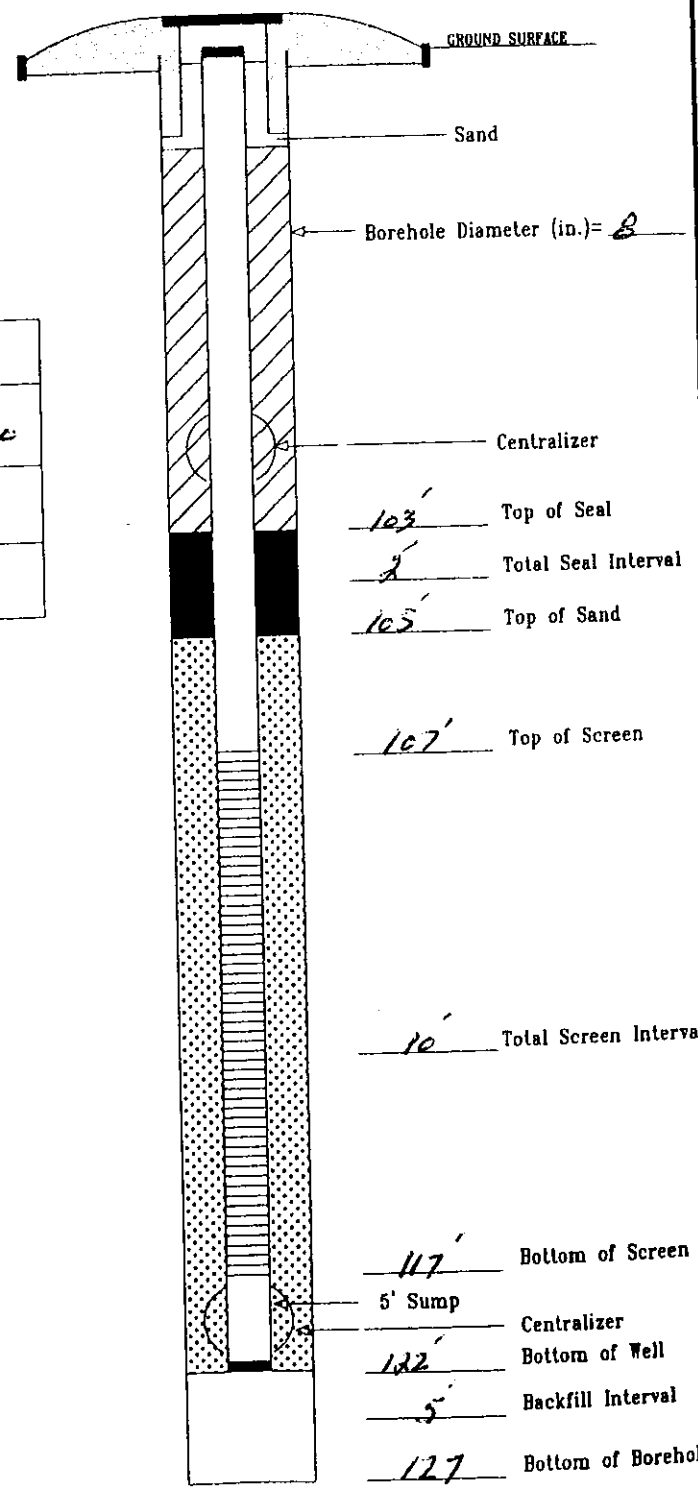

SINGLE-FORM PUCHACK.GPJ FEDERAL.GDT 6/28/00

DWR-138 M
11/98

New Jersey Department of Environmental Protection
Bureau of Water Allocation

MONITORING WELL RECORD

Well Permit No. 31 59711

Atlas Sheet Coordinates 31 02 536

OWNER IDENTIFICATION - Owner PENNSAUKEN BOARD OF EDUCA
Address 1695 HYLTON RD
City PENNSAUKEN State NJ Zip Code

WELL LOCATION - If not the same as owner please give address. Owner's Well No. MW 12 East - S
County CAMDEN Municipality PENNSAUKEN TWP Lot No. 1 Block No. 2912
Address FINLAW AVE

DATE WELL STARTED 1/9/01
DATE WELL COMPLETED 1/10/01

TYPE OF WELL (as per Well Permit Categories) MONITORING
Regulatory Program Requiring Well Case I.D.#

CONSULTING FIRM/FIELD SUPERVISOR (if applicable) CDM Federal Programs Tele. #212-785-9123

WELL CONSTRUCTION

Total depth drilled 127 ft.
Well finished to 122 ft.

Borehole diameter:
Top 8 in.
Bottom 8 in.

Well was finished: ☐ above grade
☒ flush mounted

If finished above grade, casing height (stick up) above land surface ____ ft.

Was steel protective casing installed?
☒ Yes ☐ No

Static water level after drilling 54.88 ft.

Water level was measured using M Scope

Well was developed for 4 hours
at 25 gpm

Method of development Submersible

Was permanent pumping equipment installed? ☐ Yes ☒ No

Pump capacity NA gpm

Pump type: NA

Drilling Fluid Bentonite Type of Rig Failing 1500

Health and Safety Plan submitted? ☒ Yes ☐ No

Level of Protection used on site (circle one) None (D) C B A

Note: Measure all depths from land surface	Depth to Top (ft.)	Depth to Bottom (ft.)	Diameter (inches)	Material	Wgt./Rating (lbs/sch no.)
Single/Inner Casing	0	107	4"	PVC	Sch 40
Middle Casing (for triple cased wells only)					
Outer Casing (largest diameter)					
Open Hole or Screen (No. Used 010)	107	117	4"	PVC	Sch 40
Blank Casings (No. Used)					
Tail Piece					
Gravel Pack	103	127			
Grout	0	103		Neat Cement Bentonite	7500 lbs. 200 lbs.

Grouting Method Pressure, Tremie
Drilling Method MUD Rotary

GEOLOGIC LOG

Note each depth where water was encountered in consolidated formations.

0-36 clay, some sand
36-104 m-F sand w/ fine gravel
104-127 m-F sand w/ clay layers

I certify that I have constructed the above referenced well in accordance with all well permit requirements and applicable State rules and regulations.

Drilling Company UNI-TECH DRILLING

Well Driller (Print) Karl Hitzelberger

Driller's Signature Karl Hitzelberger

Registration No. M1530 Date 7/6/01

COPIES: White - DEP Canary - Driller Pink - Owner Goldenrod - Health Dept.

THIS FORM MUST BE COMPLETED BY THE PERMITTEE OR HIS/HER AGENT

GROUND WATER MONITORING WELL CERTIFICATION - FORM B - LOCATION CERTIFICATION

Name of Permittee: U.S. Environmental Protection Agency
Name of Facility: Puchack Well Field Superfund Site
Location: Pennsauken Township, New Jersey
NJPDES Number:

LAND SURVEYOR'S CERTIFICATION

Well Permit Number (As assigned by NJDEP's Bureau of Water Allocation): 31-59711-
This number must be permanently affixed to the well casing.
Datum: NAD 1983 Horizontal - NGVD 1929 Vertical
Longitude (one-tenth of a second): West 75° 02' 25.0"
Latitude (one-tenth of a second): North 39° 57' 48.2"

North 412034.1'
East 340690.5'

Elevation of Top of Casing (cap off) (one-hundredth of a foot): WC = 38.17' IC = 37.89' GR= 38.18'
Owners Well Number (As shown on application or plans): MW-12EAST-S

BENCHMARK - NGS Monument "D 100" **ELEVATION** - 44.55'
GEOGRAPHIC POSITION - North 39° 58' 25"
West 75° 03' 37"
DATE OF SURVEY - June, 2001

AUTHENTICATION

I certify under penalty of law that I have personally examined and am familiar with the information submitted in this document and all attachments and that, based on my inquiry of those individuals immediately responsible for obtaining the information, I believe the submitted information is true, accurate and complete. I am aware that there are significant penalties for submitting false information including the possibility of fine and imprisonment.

Paul J Emilius Jr.

PROFESSIONAL LAND SURVEYOR'S SIGNATURE

Paul J. Emilius, Jr.
PROFESSIONAL LAND SURVEYOR'S NAME
(Please print or type)

SEAL

New Jersey P.L.S. License No. 37186
PROFESSIONAL LAND SURVEYOR'S LICENSE #

The Department reserves the right in cases of violation of permit specified ground water limits or Ground Water Qu Standards (N.J.A.C. 7:9-6.1 et seq.) to require that wells be resurveyed to an accuracy of one-hundredth of a second lati and longitude. This shall not be considered to be a major modification of the N.J.P.D.E.S. permit.

formb.doc

CDM Federal Programs Corporation

Double-Cased Monitoring Well

Client:	U.S. Environmental Protection Agency	Well No.:	MW 126 ICS
Site Name:	Puchack Well Field (3220-002)	Location:	Fanlane & Grant
Project Location:	Pennsauken, New Jersey	Drilling Date(s):	7/20-~~23~~ 24/00
Drilling Contractor:	Uni-Tech Drilling Co.	Initial Water Level (ft. bgs):	48.1
Drill Rig:	Failing CF 1500	Geologist:	M. AKBAR
Drilling Method:	Mud ROTARY	North: East: Elevation (ft.amsl):	
		Depth to Bottom (ft. bgs):	~~115~~ 108.6

Annular Space Details

Type of Surface Seal:

Type of Annular Grout: Portland Type II CEMENT/BETONITE

Type of Seal: Filter Pro ~~MORRIE~~ NO. 00 SAND

Type of Filter Pack: Filter Pro ~~MORRIE~~ NO. 1 SAND

Well Construction Materials

	Diameter	Type of Material
Screen	4"	PVC SCHEDULE 40
Riser Casing	4"	PVC SCHEDULE 40
Flush Mount Type		

Measurements

Outer Casing Depth (ft. bgs)	87.0'
Riser pipe length (ft)	98.6'
Screen length (ft)	10.0'
Screen slot size (in)	0.010
Depth to water (ft. bgs)	48.1
Depth to bedrock (ft. bgs)	

Designed by: Dick Walker (USGS)

Affiliation: USGS

REMARKS:

Depths - (feet)

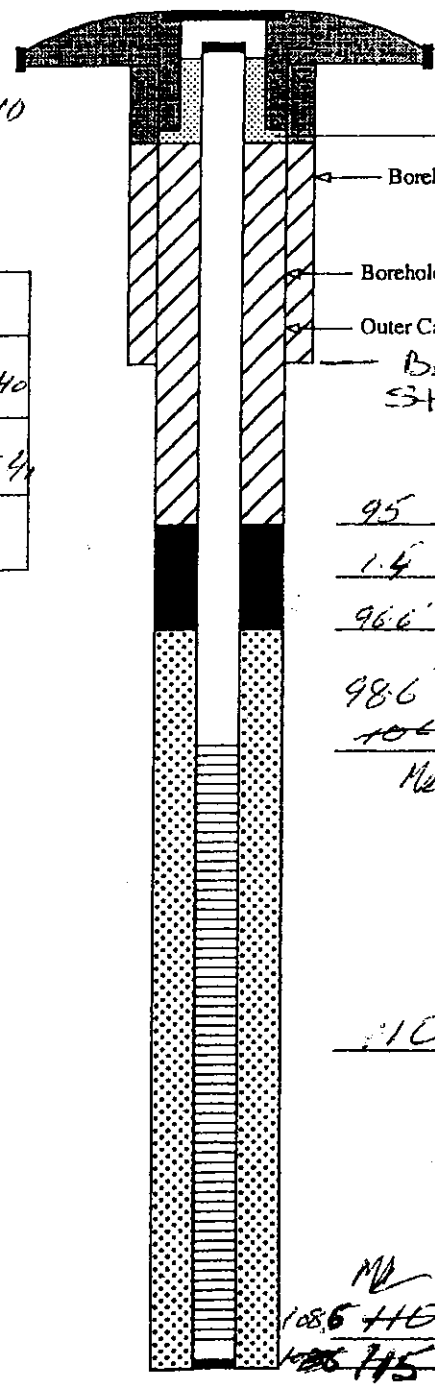

95 Top of Seal

1.4 Total Seal Interval

96.6' Top of Sand

98.6' ~~100'~~ Top of Screen

MA

10' Total Screen Interval

MA 7/25/00

108.6 ~~110~~ Bottom of Screen

~~108.6~~ ~~115~~ Bottom of Borehole

00-110

136-140

55-165

.2

DOUBLE-FORM PUCHACK.GPJ FEDERAL.GDT 6/28/00

RLW 7/19/00

DWR-199 M
11/98

New Jersey Department of Environmental Protection
Bureau of Water Allocation

MONITORING WELL RECORD

Well Permit No. 31 - 5857

Atlas Sheet Coordinates 31 02 555

OWNER IDENTIFICATION - Owner PENNSAUKEN TOWNSHIP
Address 5605 N. CRESCENT BLVD.
City PENNSAUKEN State NJ Zip Code

WELL LOCATION - If not the same as owner please give address. Owner's Well No. MW 125
County CAMDEN Municipality PENNSAUKEN TWP Lot No. N/A Block No. N/A
Address FINLAW AVE AT GRANT

DATE WELL STARTED 7/20/00
DATE WELL COMPLETED 7/25/00

TYPE OF WELL (as per Well Permit Categories) MONITORING
Regulatory Program Requiring Well Case I.D.#

CONSULTING FIRM/FIELD SUPERVISOR (if applicable) CDM Federal Tele. # 212-785-9123

WELL CONSTRUCTION

Total depth drilled 110 ft.
Well finished to 108 ft.

Borehole diameter:
Top 13 in.
Bottom 8 in.

Well was finished: ☐ above grade ☒ flush mounted

If finished above grade, casing height (stick up) above land surface ____ ft.

Was steel protective casing installed? ☒ Yes ☐ No

Static water level after drilling 48 ft.

Water level was measured using WLI

Well was developed for 6 hours at 10 gpm

Method of development Airlift/Submersible

Was permanent pumping equipment installed? ☐ Yes ☒ No

Pump capacity N/A gpm

Pump type: N/A

Drilling Fluid Bentonite Type of Rig CF 1500

Health and Safety Plan submitted? ☒ Yes ☐ No

Level of Protection used on site (circle one) None (D) C B A

Note: Measure all depths from land surface	Depth to Top (ft.)	Depth to Bottom (ft.)	Diameter (inches)	Material	Wgt./Rating (lbs/sch no.)
Single/Inner Casing	0	98.5	4	PVC	40
Middle Casing (for triple cased wells only)					
Outer Casing (largest diameter)	0	86	8	Steel	40 28 lbs/ft.
Open Hole or Screen (No. Used 010)	98.5	108.5	4	PVC	40
Blank Casings (No. Used)					
Tail Piece					
Gravel Pack	95	110	8	#1	600 #
Grout	0	86	13	Neat Cement	7000 lbs.
	0	95	8	Bentonite	____ lbs.

Grouting Method Pressure Tremie
Drilling Method Mud Rotary

GEOLOGIC LOG

Note each depth where water was encountered in consolidated formations.

0-40' CMF Sand
40-50' White Sand w/clay
50-55' clay
55'-87' white sand w/clay
87'-96' clay
96'-115' CMF sand

I certify that I have constructed the above referenced well in accordance with all well permit requirements and applicable State rules and regulations.

Drilling Company UNI TECH DRILLING

Well Driller (Print) Karl Hitzelberger

Driller's Signature Karl Hitzelberger

Registration No. M1530 Date 7/16/01

COPIES: White - DEP Canary - Driller Pink - Owner Goldenrod - Health Dept.

THIS FORM MUST BE COMPLETED BY THE PERMITTEE OR HIS/HER AGENT

GROUND WATER MONITORING WELL CERTIFICATION - FORM B - LOCATION CERTIFICATION

Name of Permittee: U.S. Environmental Protection Agency
Name of Facility: Puchack Well Field Superfund Site
Location: Pennsauken Township, New Jersey
NJPDES Number:

LAND SURVEYOR'S CERTIFICATION

Well Permit Number (As assigned by NJDEP's Bureau of Water Allocation): 31-58577-
This number must be permanently affixed to the well casing.
Datum: NAD 1983 Horizontal - NGVD 1929 Vertical
Longitude (one-tenth of a second): West 75° 02' 31.0"
Latitude (one-tenth of a second): North 39° 57' 55.5"

North 412777.7'
East 340231.7'

Elevation of Top of Casing (cap off) (one-hundredth of a foot): WC = 33.08' IC = 32.71' GR= 33.08'
Owners Well Number (As shown on application or plans): MW-12S

BENCHMARK - NGS Monument "D 100" **ELEVATION** - 44.55'
GEOGRAPHIC POSITION - North 39° 58' 25"
West 75° 03' 37"
DATE OF SURVEY - June, 2001

AUTHENTICATION

I certify under penalty of law that I have personally examined and am familiar with the information submitted in this document and all attachments and that, based on my inquiry of those individuals immediately responsible for obtaining the information, I believe the submitted information is true, accurate and complete. I am aware that there are significant penalties for submitting false information including the possibility of fine and imprisonment.

Paul J Emilius Jr.

PROFESSIONAL LAND SURVEYOR'S SIGNATURE

Paul J. Emilius, Jr.
PROFESSIONAL LAND SURVEYOR'S NAME
(Please print or type)

SEAL

New Jersey P.L.S. License No. 37186
PROFESSIONAL LAND SURVEYOR'S LICENSE #

The Department reserves the right in cases of violation of permit specified ground water limits or Ground Water Qu Standards (N.J.A.C. 7:9-6.1 et seq.) to require that wells be resurveyed to an accuracy of one-hundredth of a second latitu and longitude. This shall not be considered to be a major modification of the N.J.P.D.E.S. permit.

Single-Cased Monitoring Well

CDM Federal Programs Corporation

Client: U.S. Environmental Protection Agency
Site Name: Puchack Well Field (3220-002)
Project Location: Pennsauken, New Jersey
Drilling Contractor: Uni-Tech Drilling Co.
Drill Rig: Failing 1500
Drilling Method: Mud Rotary

Well No.: MW-12WT
Location: GRANT & FINLAW AVE
Drilling Date(s): 1/11/01
Initial Water Level (ft. bgs):
Geologist: M. Akbar
North: East: Elevation (ft.amsl):
Depth to Bottom (ft. bgs): ~~85~~ 85

Annular Space Details

Type of Surface Seal:
Type of Annular Grout: Portland Type II Cement/Bentonite
Type of Seal: FilterPro No. 00 Sand
Type of Filter Pack: FilterPro No. 1 Sand
Type of Backfill: FilterPro No. 1 Sand

Well Construction Materials

	Diameter	Type of Material
Screen	4"	PVC SCH 40
Riser Casing	4"	PVC SCH 40
Flush Mount Type		

Measurements

Riser pipe length (ft)	70
Screen length (ft)	10
Screen slot size (in)	0.010
Depth to water (ft. bgs)	
Depth to bedrock (ft. bgs)	

Designed by: Nick Walker
Affiliation: USGS

REMARKS:

Depths - (feet below ground surface)

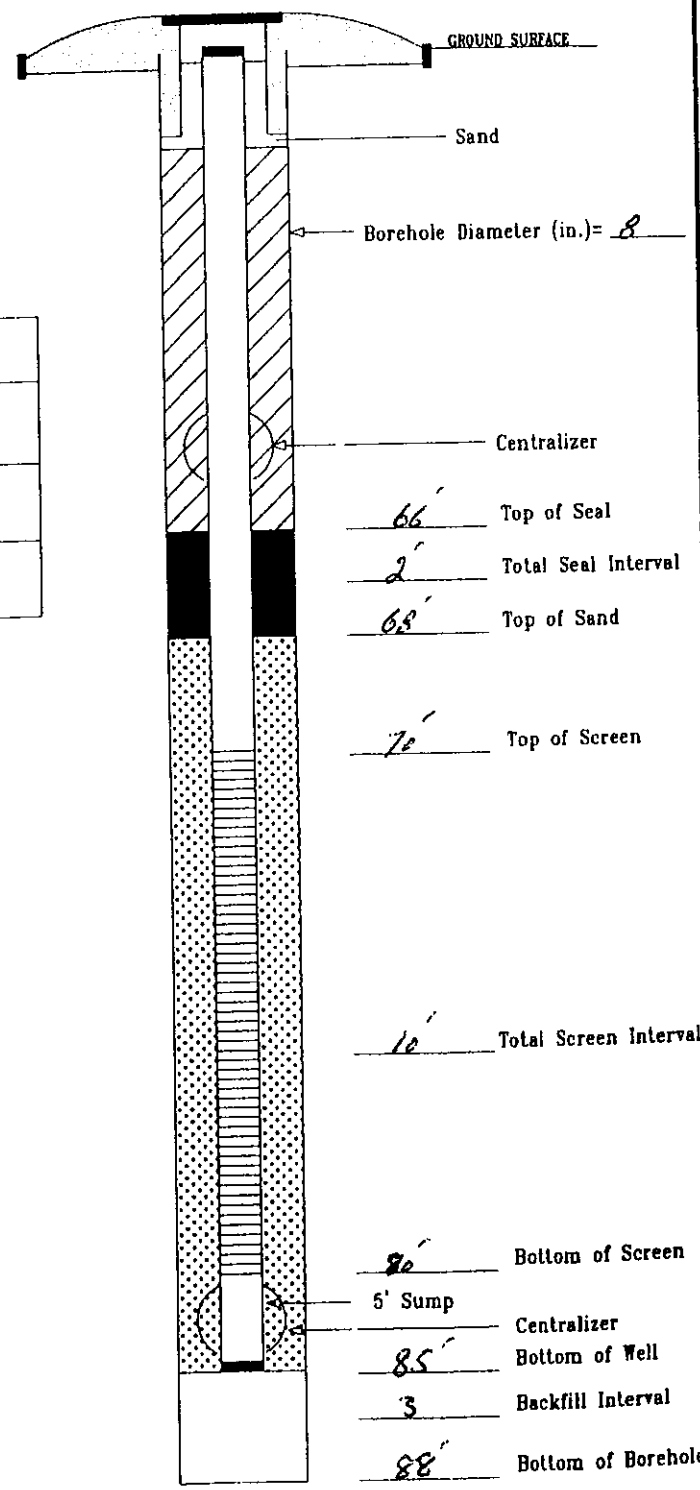

NOT TO SCALE

SINGLE-FORM PUCHACK.GPJ FEDERAL.GDT 6/28/00

DWR-138 M
11/98

New Jersey Department of Environmental Protection
Bureau of Water Allocation

MONITORING WELL RECORD

Well Permit No. 31 - 59755

Atlas Sheet Coordinates 31 : 02 : 533

PENNSAUKEN, TWP. OF

OWNER IDENTIFICATION - Owner
Address 5605 N. CRESCENT BLVD
City PENNSAUKEN State NJ Zip Code

WELL LOCATION - If not the same as owner please give address. Owner's Well No. MW-12WT
County CAMDEN Municipality PENNSAUKEN TWP Lot No. N/A Block No. N/A
Address FINLAW AVENUE AT GRANT
DATE WELL STARTED 1/11/01
DATE WELL COMPLETED 1/11/01

TYPE OF WELL (as per Well Permit Categories) MONITORING
Regulatory Program Requiring Well Case I.D.#

CONSULTING FIRM/FIELD SUPERVISOR (if applicable) CDM Federal Programs Tele. # 212-785-9123

WELL CONSTRUCTION

Total depth drilled 88 ft.
Well finished to 85 ft.

Borehole diameter:
Top 8 in.
Bottom 8 in.

Well was finished: ☐ above grade ☒ flush mounted

If finished above grade, casing height (stick up) above land surface ____ ft.

Was steel protective casing installed? ☒ Yes ☐ No

Static water level after drilling 46.48 ft.

Water level was measured using M-Scope

Well was developed for 4 hours at 25 gpm

Method of development Submersible

Was permanent pumping equipment installed? ☐ Yes ☒ No

Pump capacity NA gpm

Pump type: NA

Drilling Fluid Bentonite Type of Rig Failing 1500

Health and Safety Plan submitted? ☒ Yes ☐ No

Level of Protection used on site (circle one) None D C B A

Note: Measure all depths from land surface	Depth to Top (ft.)	Depth to Bottom (ft.)	Diameter (inches)	Material	Wgt./Rating (lbs/sch no.)
Single/Inner Casing	0	70	4"	PVC	Sch 40
Middle Casing (for triple cased wells only)					
Outer Casing (largest diameter)					
Open Hole or Screen (No. Used 010)	70	80	4"	PVC	Sch 40
Blank Casings (No. Used)					
Tail Piece					
Gravel Pack	66	88		#1 Morie	
Grout	0	66		Neat Cement Bentonite	1500 lbs. 75 lbs.

Grouting Method Pressure Tremie
Drilling Method Mud Rotary

GEOLOGIC LOG

Note each depth where water was encountered in consolidated formations.

0-15 yellow sand
15-20 clay white
20-80 sand & clay layers
80-88 coarse sand

I certify that I have constructed the above referenced well in accordance with all well permit requirements and applicable State rules and regulations.

Drilling Company UNI-TECH DRILLING
Well Driller (Print) Karl Hitzelberger
Driller's Signature Karl Hitzelberger
Registration No. M1530 Date 2/6/01

COPIES: White - DEP Canary - Driller Pink - Owner Goldenrod - Health Dept.

THIS FORM MUST BE COMPLETED BY THE PERMITTEE OR HIS/HER AGENT

GROUND WATER MONITORING WELL CERTIFICATION - FORM B - LOCATION CERTIFICATION

Name of Permittee: U.S. Environmental Protection Agency
Name of Facility: Puchack Well Field Superfund Site
Location: Pennsauken Township, New Jersey
NJPDES Number:

LAND SURVEYOR'S CERTIFICATION

Well Permit Number (As assigned by NJDEP's Bureau of Water Allocation): 31-59755-
This number must be permanently affixed to the well casing.
Datum: NAD 1983 Horizontal - NGVD 1929 Vertical
Longitude (one-tenth of a second): West 75° 02' 31.1"
Latitude (one-tenth of a second): North 39° 57' 55.6"

North 412787.7'
East 340226.1'

Elevation of Top of Casing (cap off) (one-hundredth of a foot): WC = 32.92' IC = 32.64' GR= 32.91'
Owners Well Number (As shown on application or plans): MW-12WT

BENCHMARK - NGS Monument "D 100"
GEOGRAPHIC POSITION - North 39° 58' 25"
West 75° 03' 37"
DATE OF SURVEY - June, 2001

ELEVATION - 44.55'

AUTHENTICATION

I certify under penalty of law that I have personally examined and am familiar with the information submitted in this document and all attachments and that, based on my inquiry of those individuals immediately responsible for obtaining the information, I believe the submitted information is true, accurate and complete. I am aware that there are significant penalties for submitting false information including the possibility of fine and imprisonment.

Paul J Emilius Jr.

PROFESSIONAL LAND SURVEYOR'S SIGNATURE

Paul J. Emilius, Jr.
PROFESSIONAL LAND SURVEYOR'S NAME
(Please print or type)

SEAL

New Jersey P.L.S. License No. 37186
PROFESSIONAL LAND SURVEYOR'S LICENSE #

The Department reserves the right in cases of violation of permit specified ground water limits or Ground Water Qu Standards (N.J.A.C. 7:9-6.1 et seq.) to require that wells be resurveyed to an accuracy of one-hundredth of a second latitude and longitude. This shall not be considered to be a major modification of the N.J.P.D.E.S. permit.

formb.doc

CDM Federal Programs Corporation

Double-Cased Monitoring Well

Client:	U.S. Environmental Protection Agency	Well No.:	MW 13 D
Site Name:	Puchack Well Field (3220-002)	Location:	Union Arc
Project Location:	Pennsauken, New Jersey	Drilling Date(s):	8/16/00 - 8/28/00
Drilling Contractor:	Uni-Tech Drilling Co.	Initial Water Level (ft. bgs):	
Drill Rig:	Failing CF 1500	Geologist:	Lisa Campbell
Drilling Method:	mud rotary	North: East:	Elevation (ft.amsl):
		Depth to Bottom (ft. bgs):	~~263'~~ 227'

Annular Space Details

Type of Surface Seal:

Type of Annular Grout: Portland Type II / Bentonite

Type of Seal: Filter Pro #00 sand

Type of Filter Pack: Filter Pro #01 sand

Type of Backfill: ~~Filter Pro #01 sand~~ see remarks

Well Construction Materials

	Diameter	Type of Material
Screen	4"	Sch 40 PVC
Riser Casing	4"	Sch 40 PVC
Flush Mount Type		

Measurements

Outer Casing Depth (ft. bgs)	176'
Riser pipe length (ft)	215'
Screen length (ft)	10'
Screen slot size (in)	0.010"
Depth to water (ft. bgs)	
Depth to bedrock (ft. bgs)	260'

Designed by: Dick Walker

Affiliation: USGS

REMARKS: Proposed depth - R L Walker USGS 8/28/00

backfill:
227-230: Filter Pro #1 sand
230-232: Filter Pro #00 sand

NOT TO SCALE

Depths - (feet below ground surface)

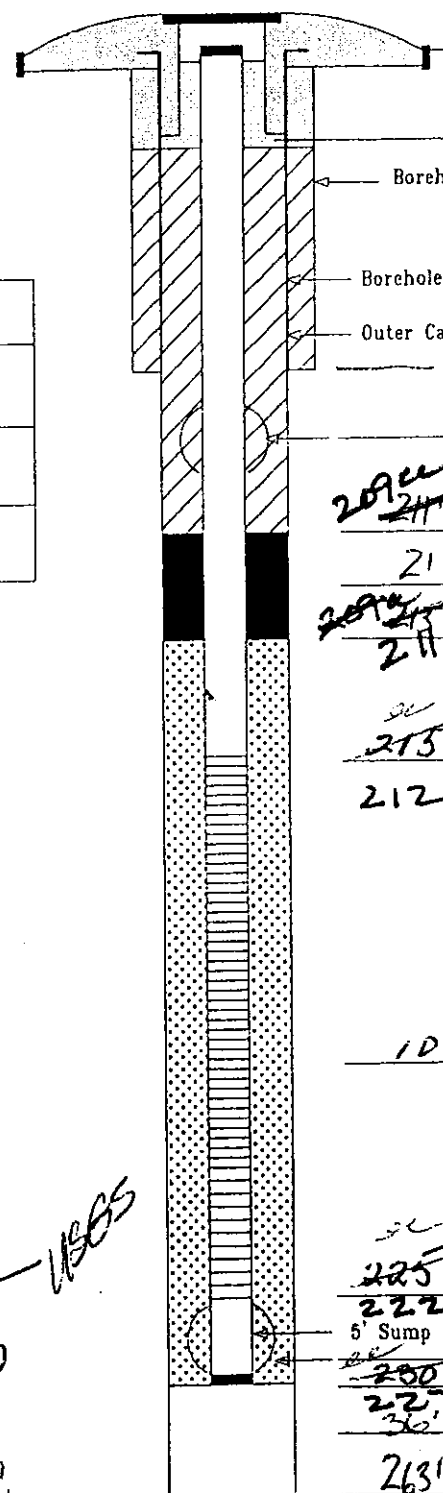

DOUBLE-FORM PUCHACK.CPJ FEDERAL.GDT 8/28/00

DWR-138 M
11/98

New Jersey Department of Environmental Protection
Bureau of Water Allocation

MONITORING WELL RECORD

Well Permit No. 31 - 58578

Atlas Sheet Coordinates 31 : 02 : 292

OWNER IDENTIFICATION - Owner DELAWARE RIVER PORT AUTHO
Address 1 BETSY ROSS BRIDGE PLAZA
City PENNSAUKEN State NJ Zip Code

WELL LOCATION - If not the same as owner please give address. Owner's Well No. MW 13D
County CAMDEN Municipality PENNSAUKEN TWP Lot No. N/A Block No. N/A
Address UNION AVE.

DATE WELL STARTED 8/16/00
DATE WELL COMPLETED 8/20/00

TYPE OF WELL (as per Well Permit Categories) MONITORING
Regulatory Program Requiring Well Case I.D.#

CONSULTING FIRM/FIELD SUPERVISOR (if applicable) CDM Federal Programs Tele. #

WELL CONSTRUCTION

Total depth drilled 263 ft.
Well finished to 227 ft.

Borehole diameter:
Top 13 in.
Bottom 8 in.

Well was finished: ☐ above grade ☒ flush mounted

If finished above grade, casing height (stick up) above land surface ____ ft.

Was steel protective casing installed? ☒ Yes ☐ No

Static water level after drilling 53 ft.

Water level was measured using WLI

Well was developed for 6 hours at 10 gpm

Method of development Airlift / Submersible

Was permanent pumping equipment installed? ☐ Yes ☒ No

Pump capacity N/A gpm

Pump type: N/A

Drilling Fluid Bentonite Type of Rig CF 1500

Health and Safety Plan submitted? ☒ Yes ☐ No

Level of Protection used on site (circle one) None (D) C B A

Note: Measure all depths from land surface	Depth to Top (ft.)	Depth to Bottom (ft.)	Diameter (inches)	Material	Wgt./Rating (lbs/sch no.)
Single/Inner Casing	0	212	4	PVC	40
Middle Casing (for triple cased wells only)					
Outer Casing (largest diameter)	0	176	8	Steel	40 / 28 lbs/Ft
Open Hole or Screen (No. Used .010)	212	222	4	PVC	40
Blank Casings (No. Used)					
Tail Piece	222	227	4	PVC	40
Gravel Pack	211	230			
Grout	0	176 / 211	13/8	Neat Cement	1420 lbs.
	230	263		Bentonite	300 lbs.

Grouting Method Pressure Tremie
Drilling Method Mud Rotary

GEOLOGIC LOG

Note each depth where water was encountered in consolidated formations.

0-30' Yellow sand CMF
30' - 58' Orange and white clay
58' - 70' FM sand
70 - 100 CMF sand
100 - 138 clay orange lt. brown
138 - 145 CMF sand
145 - 172 white clay
172 - 220 Sand and clay lenses
220 - 252 Cobbles sand & gravel
252 - 263 Decomposed Rock

I certify that I have constructed the above referenced well in accordance with all well permit requirements and applicable State rules and regulations.

Drilling Company UNI-TECH DRILLING
Well Driller (Print) Karl Hitzelberger
Driller's Signature Karl Hitzelberger
Registration No. M1530 Date 9/6/01

COPIES: White - DEP Canary - Driller Pink - Owner Goldenrod - Health Dept.

THIS FORM MUST BE COMPLETED BY THE PERMITTEE OR HIS/HER AGENT

GROUND WATER MONITORING WELL CERTIFICATION - FORM B - LOCATION CERTIFICATION

Name of Permittee: U.S. Environmental Protection Agency
Name of Facility: Puchack Well Field Superfund Site
Location: Pennsauken Township, New Jersey
NJPDES Number:

LAND SURVEYOR'S CERTIFICATION

Well Permit Number (As assigned by NJDEP's Bureau of Water Allocation): 31-58578-
This number must be permanently affixed to the well casing.
Datum: NAD 1983 Horizontal - NGVD 1929 Vertical
Longitude (one-tenth of a second): West 75° 02' 20.0"
Latitude (one-tenth of a second): North 39° 58' 15.2"

North 414766.8'
East 341101.4'

Elevation of Top of Casing (cap off) (one-hundredth of a foot): WC = 35.06' IC = 34.69' GR= 35.10'
Owners Well Number (As shown on application or plans): MW-13D

BENCHMARK - NGS Monument "D 100"
GEOGRAPHIC POSITION - North 39° 58' 25"
West 75° 03' 37"
DATE OF SURVEY - June, 2001

ELEVATION - 44.55'

AUTHENTICATION

I certify under penalty of law that I have personally examined and am familiar with the information submitted in this document and all attachments and that, based on my inquiry of those individuals immediately responsible for obtaining the information, I believe the submitted information is true, accurate and complete. I am aware that there are significant penalties for submitting false information including the possibility of fine and imprisonment.

Paul J Emilius Jr.

PROFESSIONAL LAND SURVEYOR'S SIGNATURE

Paul J. Emilius, Jr.
PROFESSIONAL LAND SURVEYOR'S NAME
(Please print or type)

SEAL

New Jersey P.L.S. License No. 37186
PROFESSIONAL LAND SURVEYOR'S LICENSE #

The Department reserves the right in cases of violation of permit specified ground water limits or Ground Water Qu Standards (N.J.A.C. 7:9-6.1 et seq.) to require that wells be resurveyed to an accuracy of one-hundredth of a second lati and longitude. This shall not be considered to be a major modification of the N.J.P.D.E.S. permit.

CDM Federal Programs Corporation

Double-Cased Monitoring Well

Client:	U.S. Environmental Protection Agency	Well No.:	MW-13 I
Site Name:	Puchack Well Field (3220-002)	Location:	Union Ave
Project Location:	Pennsauken, New Jersey	Drilling Date(s):	8/30 - 9/5/00
Drilling Contractor:	Uni-Tech Drilling Co.	Initial Water Level (ft. bgs):	
Drill Rig:	Failing CF1500	Geologist:	L. Campbell
Drilling Method:	mud rotary	North: East: Elevation (ft.amsl):	
		Depth to Bottom (ft. bgs):	~~147~~ 145'

Annular Space Details

Type of Surface Seal:

Type of Annular Grout: Portland Type II / Bentonite

Type of Seal: #00 sand

Type of Filter Pack: #01 sand

Type of Backfill: #01 sand

Well Construction Materials

	Diameter	Type of Material
Screen	4"	Sch 40 PVC
Riser Casing	4"	Sch 40 PVC
Flush Mount Type		

Measurements

Outer Casing Depth (ft. bgs)	105'
Riser pipe length (ft)	140'
Screen length (ft)	5'
Screen slot size (in)	0.010"
Depth to water (ft. bgs)	
Depth to bedrock (ft. bgs)	

Designed by: Dick Walker

Affiliation: USGS

REMARKS: RDWalker 8/28/00 USGS

NOT TO SCALE

Depths – (feet below ground surface)

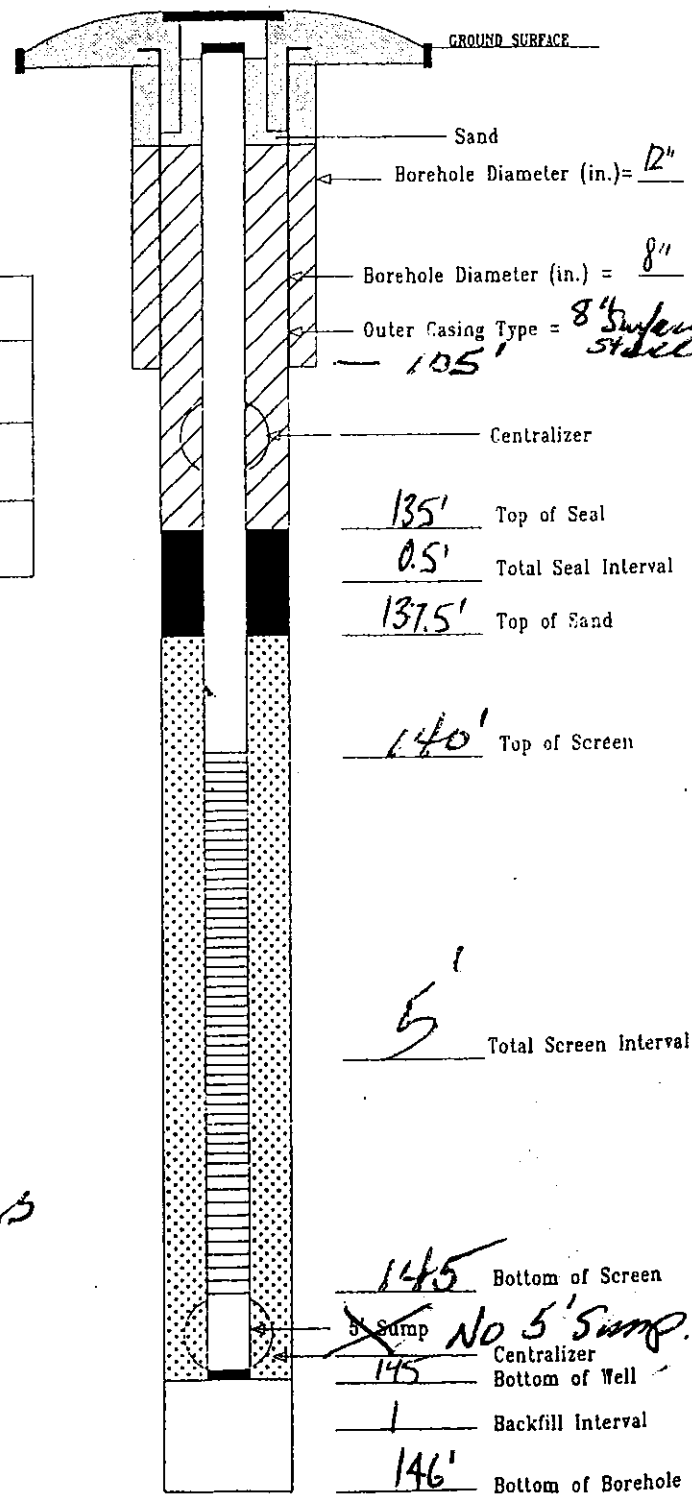

DOUBLE-FORM PUCHACK.CPJ FEDERAL.CDT 6/28/00

DWR-138 M
11/98

New Jersey Department of Environmental Protection
Bureau of Water Allocation

MONITORING WELL RECORD

Well Permit No. 31 - 58579

Atlas Sheet Coordinates 31 : 02 / 299

OWNER IDENTIFICATION - Owner DELAWARE RIVER PORT AUTHO
Address 1 BETSY ROSS BRIDGE PLAZA
City PENNSAUKEN State NJ Zip Code

WELL LOCATION - If not the same as owner please give address. Owner's Well No. MW 13I
County CAMDEN Municipality PENNSAUKEN TWP Lot No. N/A Block No. N/A
Address UNION AVE.

DATE WELL STARTED 8 / 30 / 00
DATE WELL COMPLETED 9 / 05 / 00

TYPE OF WELL (as per Well Permit Categories) MONITORING
Regulatory Program Requiring Well Case I.D.#
CONSULTING FIRM/FIELD SUPERVISOR (if applicable) CDM Federal Program Tele. #

WELL CONSTRUCTION

Total depth drilled 146 ft.
Well finished to 145 ft.

Borehole diameter:
Top 13 in.
Bottom 8 in.

Well was finished: ☐ above grade ☒ flush mounted

If finished above grade, casing height (stick up) above land surface ____ ft.

Was steel protective casing installed? ☒ Yes ☐ No

Static water level after drilling 53 ft.

Water level was measured using WLI

Well was developed for 7 hours at 10 gpm

Method of development Airlift/Submersible

Was permanent pumping equipment installed? ☐ Yes ☒ No

Pump capacity N/A gpm

Pump type N/A

Drilling Fluid Bentonite Type of Rig CF1500

Health and Safety Plan submitted? ☒ Yes ☐ No

Level of Protection used on site (circle one) None (D) C B A

Note: Measure all depths from land surface	Depth to Top (ft.)	Depth to Bottom (ft.)	Diameter (inches)	Material	Wgt./Rating (lbs/sch no.)
Single/Inner Casing	0	140	4	PVC	40
Middle Casing (for triple cased wells only)					
Outer Casing (largest diameter)	0	105	8	Steel	40 28 lbs/Ft
Open Hole or Screen (No. Used .010)	140	145	4	PVC	40
Blank Casings (No. Used)					
Tail Piece					
Gravel Pack	135	146	8	#1	600#
Grout	0	105	13	Neat Cement	7035 lbs.
	0	135	8	Bentonite	200 lbs.

Grouting Method Pressure Tremie
Drilling Method Mud Rotary

GEOLOGIC LOG

Note each depth where water was encountered in consolidated formations.

0-30' Yellow sand CMF
30'-58' Orange white clay
58'-70' FM Sand
70'-100' CMF Sand
100'-138' Clay orange to brown
138'-145' CMF Sand
145'-146' Clay

I certify that I have constructed the above referenced well in accordance with all well permit requirements and applicable State rules and regulations.

Drilling Company UNI-TECH DRILLING
Well Driller (Print) Karl Hitzelberger
Driller's Signature Karl Hitzelberger
Registration No. M1530 Date 7/6/01

COPIES: White - DEP Canary - Driller Pink - Owner Goldenrod - Health Dept.

THIS FORM MUST BE COMPLETED BY THE PERMITTEE OR HIS/HER AGENT

GROUND WATER MONITORING WELL CERTIFICATION - FORM B - LOCATION CERTIFICATION

Name of Permittee: U.S. Environmental Protection Agency
Name of Facility: Puchack Well Field Superfund Site
Location: Pennsauken Township, New Jersey
NJPDES Number:

LAND SURVEYOR'S CERTIFICATION

Well Permit Number (As assigned by NJDEP's Bureau of Water Allocation): 31-58579-
This number must be permanently affixed to the well casing.
Datum: NAD 1983 Horizontal - NGVD 1929 Vertical
Longitude (one-tenth of a second): West 75° 02' 20.1"
Latitude (one-tenth of a second): North 39° 58' 15.3"

North 414777.6'
East 341093.8'

Elevation of Top of Casing (cap off) (one-hundredth of a foot): WC = 34.74' IC = 34.31' GR= 34.80'
Owners Well Number (As shown on application or plans): MW-13I

BENCHMARK - NGS Monument "D 100"
GEOGRAPHIC POSITION - North 39° 58' 25"
West 75° 03' 37"
DATE OF SURVEY - June, 2001

ELEVATION - 44.55'

AUTHENTICATION

I certify under penalty of law that I have personally examined and am familiar with the information submitted in this document and all attachments and that, based on my inquiry of those individuals immediately responsible for obtaining the information, I believe the submitted information is true, accurate and complete. I am aware that there are significant penalties for submitting false information including the possibility of fine and imprisonment.

Paul J Emilius Jr.

PROFESSIONAL LAND SURVEYOR'S SIGNATURE

Paul J. Emilius, Jr.
PROFESSIONAL LAND SURVEYOR'S NAME
(Please print or type)

SEAL

New Jersey P.L.S. License No. 37186
PROFESSIONAL LAND SURVEYOR'S LICENSE #

The Department reserves the right in cases of violation of permit specified ground water limits or Ground Water Qu Standards (N.J.A.C. 7:9-6.1 et seq.) to require that wells be resurveyed to an accuracy of one-hundredth of a second latitude and longitude. This shall not be considered to be a major modification of the N.J.P.D.E.S. permit.

CDM Federal Programs Corporation

Single- ~~Double~~-Cased Monitoring Well

Client:	U.S. Environmental Protection Agency	Well No.:	MW-13 M
Site Name:	Puchack Well Field (3220-002)	Location:	Union Ave
Project Location:	Pennsauken, New Jersey	Drilling Date(s):	~~8/16~~ 9/6/00
Drilling Contractor:	Uni-Tech Drilling Co.	Initial Water Level (ft. bgs):	
Drill Rig:	Failing CF 1500	Geologist:	L. Campbell
Drilling Method:	mud rotary	North: East:	Elevation (ft.amsl):
		Depth to Bottom (ft. bgs):	~~96.5'~~ 95'

Annular Space Details

Type of Surface Seal:

Type of Annular Grout: Type II Portland/Bentonite

Type of Seal: FilterPro #00 Sand

Type of Filter Pack: FilterPro #01 Sand

Type of Backfill: FilterPro #01 Sand

Well Construction Materials

	Diameter	Type of Material
Screen	4"	Sch 40 PVC
Riser Casing	4"	Sch 40 PVC
Flush Mount Type		

Measurements

Outer Casing Depth (ft. bgs)	none
Riser pipe length (ft)	80'
Screen length (ft)	10'
Screen slot size (in)	0.010"
Depth to water (ft. bgs)	
Depth to bedrock (ft. bgs)	

Designed by:

Affiliation:

REMARKS:

RLWilhe USGS 8/28/00

NOT TO SCALE

Depths – (feet below ground surface)

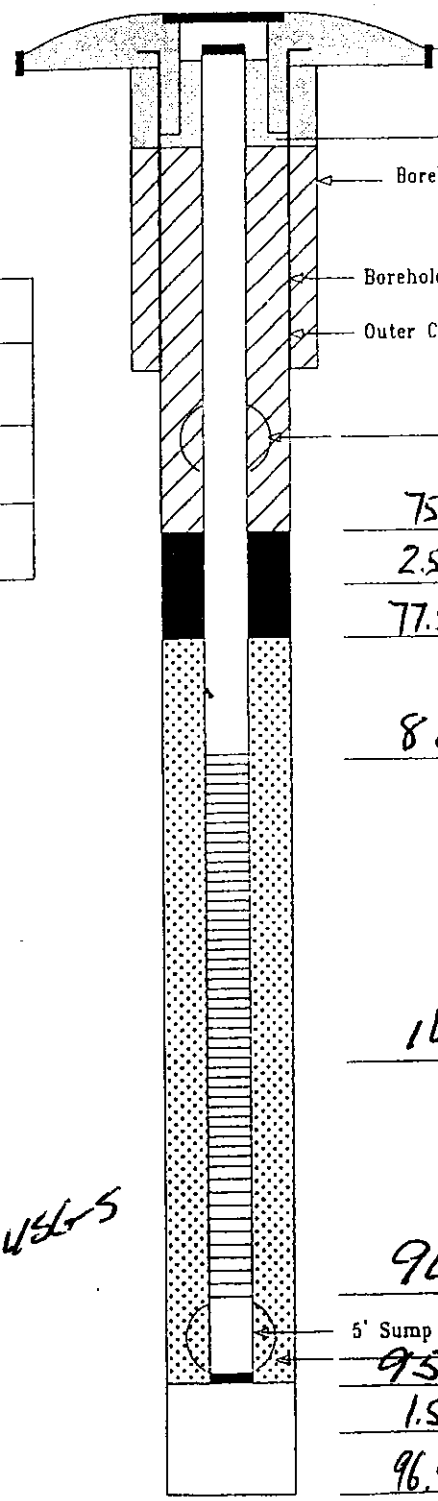

DOUBLE-FORM PUCHACK.GPJ FEDERAL.GDT 6/28/00

DWR-138 M
11/98

New Jersey Department of Environmental Protection
Bureau of Water Allocation

MONITORING WELL RECORD

Well Permit No. 31 - 58580

Atlas Sheet Coordinates 31 : 02 : 299

OWNER IDENTIFICATION - Owner DELAWARE RIVER PORT AUTHO
Address 1 BETSY ROSS BRIDGE PLAZA
City PENNSAUKEN State NJ Zip Code

WELL LOCATION - If not the same as owner please give address. Owner's Well No. MW 13 M
County CAMDEN Municipality PENNSAUKEN TWP Lot No. N/A Block No. N/A
Address UNION AVE.

DATE WELL STARTED 8 / 16 / 00
DATE WELL COMPLETED ~~[illegible]~~ 9-6-00

TYPE OF WELL (as per Well Permit Categories) MONITORING
Regulatory Program Requiring Well Case I.D.#

CONSULTING FIRM/FIELD SUPERVISOR (if applicable) CDM Federal Programs Tele. # 212-785-9123

WELL CONSTRUCTION
Total depth drilled 96.5 ft.
Well finished to 95 ft.

Borehole diameter:
Top 8 in.
Bottom 8 in.

Well was finished: ☐ above grade ☒ flush mounted

If finished above grade, casing height (stick up) above land surface ____ ft.

Was steel protective casing installed? ☒ Yes ☐ No

Static water level after drilling 54 ft.

Water level was measured using WLI

Well was developed for 2 hours at ____ gpm

Method of development Submersible

Was permanent pumping equipment installed? ☐ Yes ☒ No

Pump capacity N/A gpm

Pump type: N/A

Drilling Fluid Bentonite Type of Rig CF1500

Health and Safety Plan submitted? ☒ Yes ☐ No

Level of Protection used on site (circle one) None (D) C B A

Note: Measure all depths from land surface	Depth to Top (ft.)	Depth to Bottom (ft.)	Diameter (inches)	Material	Wgt./Rating (lbs/sch no.)
Single/Inner Casing	0	80	4	PVC	40
Middle Casing (for triple cased wells only)					
Outer Casing (largest diameter)					
Open Hole or Screen (No. Used .010)	80	90	4	PVC	40
Blank Casings (No. Used)					
Tail Piece	90	95	4	PVC	40
Gravel Pack	75	96.5	8	#1	600
Grout	0	75	8	Neat Cement Bentonite	1690 lbs. 100 lbs.

Grouting Method Pressure Tremie
Drilling Method Mud Rotary

GEOLOGIC LOG

Note each depth where water was encountered in consolidated formations.

0-30' Yellow CMF sand
30'-58' Orange and white clay
70'-100' Fn Sand

I certify that I have constructed the above referenced well in accordance with all well permit requirements and applicable State rules and regulations.

Drilling Company UNI-TECH DRILLING

Well Driller (Print) Karl Hitzelberger

Driller's Signature Karl Hitzelberger

Registration No. M1530 Date 7 / 6 / 01

COPIES: White - DEP Canary - Driller Pink - Owner Goldenrod - Health Dept.

THIS FORM MUST BE COMPLETED BY THE PERMITTEE OR HIS/HER AGENT

GROUND WATER MONITORING WELL CERTIFICATION - FORM B - LOCATION CERTIFICATION

Name of Permittee: U.S. Environmental Protection Agency
Name of Facility: Puchack Well Field Superfund Site
Location: Pennsauken Township, New Jersey
NJPDES Number:

LAND SURVEYOR'S CERTIFICATION

Well Permit Number (As assigned by NJDEP's Bureau of Water Allocation): 31-58580-
This number must be permanently affixed to the well casing.
Datum: NAD 1983 Horizontal - NGVD 1929 Vertical
Longitude (one-tenth of a second): West 75° 02' 20.2"
Latitude (one-tenth of a second): North 39° 58' 15.4"

North 414789.9'
East 341085.2'

Elevation of Top of Casing (cap off) (one-hundredth of a foot): WC = 34.58' IC = 34.31' GR= 34.62'
Owners Well Number (As shown on application or plans): MW-13M

BENCHMARK - NGS Monument "D 100" **ELEVATION** - 44.55'
GEOGRAPHIC POSITION - North 39° 58' 25"
West 75° 03' 37"
DATE OF SURVEY - June, 2001

AUTHENTICATION

I certify under penalty of law that I have personally examined and am familiar with the information submitted in this document and all attachments and that, based on my inquiry of those individuals immediately responsible for obtaining the information, I believe the submitted information is true, accurate and complete. I am aware that there are significant penalties for submitting false information including the possibility of fine and imprisonment.

Paul J Emilius Jr.

PROFESSIONAL LAND SURVEYOR'S SIGNATURE

Paul J. Emilius, Jr.
PROFESSIONAL LAND SURVEYOR'S NAME
(Please print or type)

SEAL

New Jersey P.L.S. License No. 37186
PROFESSIONAL LAND SURVEYOR'S LICENSE #

The Department reserves the right in cases of violation of permit specified ground water limits or Ground Water Qu Standards (N.J.A.C. 7:9-6.1 et seq.) to require that wells be resurveyed to an accuracy of one-hundredth of a second lati... and longitude. This shall not be considered to be a major modification of the N.J.P.D.E.S. permit.

formb.doc

Double-Cased Monitoring Well

CDM Federal Programs Corporation

Client: U.S. Environmental Protection Agency
Site Name: Puchack Well Field (3220-002)
Project Location: Pennsauken, New Jersey
Drilling Contractor: Uni-Tech Drilling Co.
Drill Rig: Failing CF1500
Drilling Method: Mud Rotary

Well No.: MW-14 Bethel-I
Location: Bethel Ave R-O-W
Drilling Date(s): 1-16-01 - 1-24-01
Initial Water Level (ft. bgs):
Geologist: L. Campbell
North: East: Elevation (ft.amsl):
Depth to Bottom (ft. bgs): 200'

Annular Space Details

Type of Surface Seal:
Type of Annular Grout: Portland Type II cement/bentonite grout
Type of Seal: Filter Pro #00 sand
Type of Filter Pack: Filter Pro #1 sand
Type of Backfill: see remarks

Well Construction Materials

	Diameter	Type of Material
Screen	4"	Sch 40 PVC
Riser Casing	4"	Sch 40 PVC
Flush Mount Type		

Measurements

Outer Casing Depth (ft. bgs)	180
Riser pipe length (ft)	190'
Screen length (ft)	10'
Screen slot size (in)	0.010-
Depth to water (ft. bgs)	
Depth to bedrock (ft. bgs)	

Designed by:
Affiliation:

REMARKS: backfill:
200-205: Filter Pro #00 sand
205-212: Portland Type II cement/bentonite grout
212-242: Filter Pro #1 sand
242-250: Natural backfill (cave-in)

NOT TO SCALE

Depths - (feet below ground surface)

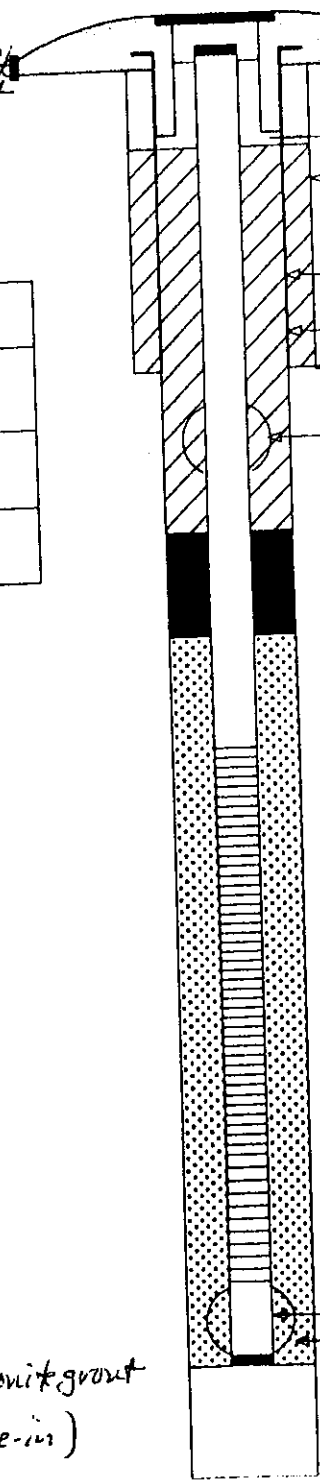

GROUND SURFACE
Sand
Borehole Diameter (in.) = 12"
Borehole Diameter (in.) = 8"
Outer Casing Type = 8" steel
180'
Centralizer
185 Top of Seal
3' Total Seal Interval
188 Top of Sand
190 Top of Screen
10' Total Screen Interval
200 Bottom of Screen
~~5' Sump~~
Centralizer
200' Bottom of Well
50' Backfill Interval
250' Bottom of Borehole

DOUBLE-FORM PUCHACK.GPJ FEDCALL.GPJ 6/28/00

DWR-138 M
11/98

New Jersey Department of Environmental Protection
Bureau of Water Allocation

MONITORING WELL RECORD

Well Permit No. 31 - 59764

Atlas Sheet Coordinates 31 02 278

OWNER IDENTIFICATION - Owner PENNSAUKEN TWP
Address 5605 N CRESCENT BLVD
City PENNSAUKEN State NJ Zip Code

WELL LOCATION - If not the same as owner please give address. Owner's Well No. MW14 - Bethel I
County CAMDEN Municipality PENNSAUKEN TWP Lot No. 8 Block No. 1101
Address BETHEL AVE R.O.W.

DATE WELL STARTED 1/16/01
DATE WELL COMPLETED 1/24/01

TYPE OF WELL (as per Well Permit Categories) MONITORING
Regulatory Program Requiring Well Case I.D.#

CONSULTING FIRM/FIELD SUPERVISOR (if applicable) CDM Federal Programs Tele. #

WELL CONSTRUCTION

Total depth drilled 250 ft.
Well finished to 205 ft.

Borehole diameter:
Top 12 in.
Bottom 8 in.

Well was finished: [X] above grade
[ ] flush mounted

If finished above grade, casing height (stick up) above land surface 2.4 ft.

Was steel protective casing installed?
[X] Yes [ ] No

Static water level after drilling 23.69 ft.

Water level was measured using M-Scope

Well was developed for 4 hours
at 25 gpm

Method of development Submersible

Was permanent pumping equipment installed? [ ] Yes [X] No

Pump capacity NA gpm

Pump type: NA

Drilling Fluid Bentonite Type of Rig Failing 1500

Health and Safety Plan submitted? [X] Yes [ ] No

Level of Protection used on site (circle one) None (D) C B A

Note: Measure all depths from land surface	Depth to Top (ft.)	Depth to Bottom (ft.)	Diameter (inches)	Material	Wgt./Rating (lbs/sch no.)
Single/Inner Casing	+2.4	190	4"	PVC	Sch 40
Middle Casing (for triple cased wells only)					
Outer Casing (largest diameter)	0	180	8"	Steel	Sch 40
Open Hole or Screen (No. Used 0/0)	190	200	4"	PVC	Sch 40
Blank Casings (No. Used)					
Tail Piece					
Gravel Pack	185	250		#1 marie	
Grout	0	180		Neat Cement	16000 lbs.
	0	185		Bentonite	450 lbs.

Grouting Method Pressure Tremie
Drilling Method MUD Rotary

GEOLOGIC LOG

Note each depth where water was encountered in consolidated formations.

0-180 brownish yellow sand
180-230 MF sand
230-250 mc yellow sand

I certify that I have constructed the above referenced well in accordance with all well permit requirements and applicable State rules and regulations.

Drilling Company UNI-TECH DRILLING
Well Driller (Print) Karl Hitzelberger
Driller's Signature Karl Hitzelberger
Registration No. M1530 Date 2/6/01

COPIES: White - DEP Canary - Driller Pink - Owner Goldenrod - Health Dept.

THIS FORM MUST BE COMPLETED BY THE PERMITTEE OR HIS/HER AGENT

GROUND WATER MONITORING WELL CERTIFICATION - FORM B - LOCATION CERTIFICATION

Name of Permittee: U.S. Environmental Protection Agency
Name of Facility: Puchack Well Field Superfund Site
Location: Pennsauken Township, New Jersey
NJPDES Number:

LAND SURVEYOR'S CERTIFICATION

Well Permit Number (As assigned by NJDEP's Bureau of Water Allocation): 31-59764-
This number must be permanently affixed to the well casing.
Datum: NAD 1983 Horizontal - NGVD 1929 Vertical
Longitude (one-tenth of a second): West 75° 03' 12.2"
Latitude (one-tenth of a second): North 39° 58' 06.1"

North 413867.1'
East 337029.8'

Elevation of Top of Casing (cap off) (one-hundredth of a foot): WC = 61.47' IC = 61.16' GR= 58.73'
Owners Well Number (As shown on application or plans): MW-14BETHEL-I

BENCHMARK - NGS Monument "D 100" **ELEVATION** - 44.55'
GEOGRAPHIC POSITION - North 39° 58' 25"
West 75° 03' 37"
DATE OF SURVEY - June, 2001

AUTHENTICATION

I certify under penalty of law that I have personally examined and am familiar with the information submitted in this document and all attachments and that, based on my inquiry of those individuals immediately responsible for obtaining the information, I believe the submitted information is true, accurate and complete. I am aware that there are significant penalties for submitting false information including the possibility of fine and imprisonment.

Paul J Emilius Jr.

PROFESSIONAL LAND SURVEYOR'S SIGNATURE

Paul J. Emilius, Jr.
PROFESSIONAL LAND SURVEYOR'S NAME
(Please print or type)

SEAL

New Jersey P.L.S. License No. 37186
PROFESSIONAL LAND SURVEYOR'S LICENSE #

The Department reserves the right in cases of violation of permit specified ground water limits or Ground Water Q Standards (N.J.A.C. 7:9-6.1 et seq.) to require that wells be resurveyed to an accuracy of one-hundredth of a second lat. and longitude. This shall not be considered to be a major modification of the N.J.P.D.E.S. permit.

formb.doc

CDM Federal Programs Corporation

Double-Cased Monitoring Well

Client: U.S. Environmental Protection Agency
Site Name: Puchack Well Field (3220-002)
Project Location: Pennsauken, New Jersey
Drilling Contractor: Uni-Tech Drilling Co.
Drill Rig: FAILING 1500
Drilling Method: MUD ROTARY

Well No.: MW-14 D
Location: Sherman Ave
Drilling Date(s): ~~11/8-15/00~~ 11/16-21/00
Initial Water Level (ft. bgs):
Geologist: M Akbar
North: East: Elevation (ft.amsl): 60±
Depth to Bottom (ft. bgs): ~~245~~ 235'

Annular Space Details

Type of Surface Seal: Portland Type II CEMENT/BENTONITE
Type of Annular Grout: ~~NO. 00 Sand~~
Type of Seal: Filter Pro NO. 00 SAND
Type of Filter Pack: Filter Pro NO. 1 SAND
Type of Backfill: ~~Filter Pro No. 1 Sand~~ ~~see remarks~~ ~~NO. 1 SAND & CEMENT/BENTONITE~~ Natural materials (borehole collapse)

Well Construction Materials

	Diameter	Type of Material
Screen	4"	SCH 40 PVC
Riser Casing	4"	SCH 40 PVC
Flush Mount Type		

Measurements

Outer Casing Depth (ft. bgs)	184'
Riser pipe length (ft)	220'
Screen length (ft)	10'
Screen slot size (in)	0.010
Depth to water (ft. bgs)	
Depth to bedrock (ft. bgs)	~~274'~~

Designed by: DICK WALKER
Affiliation: USGS

REMARKS: ~~backfill~~ ~~235~~

NOT TO SCALE

Depths - (feet below ground surface)

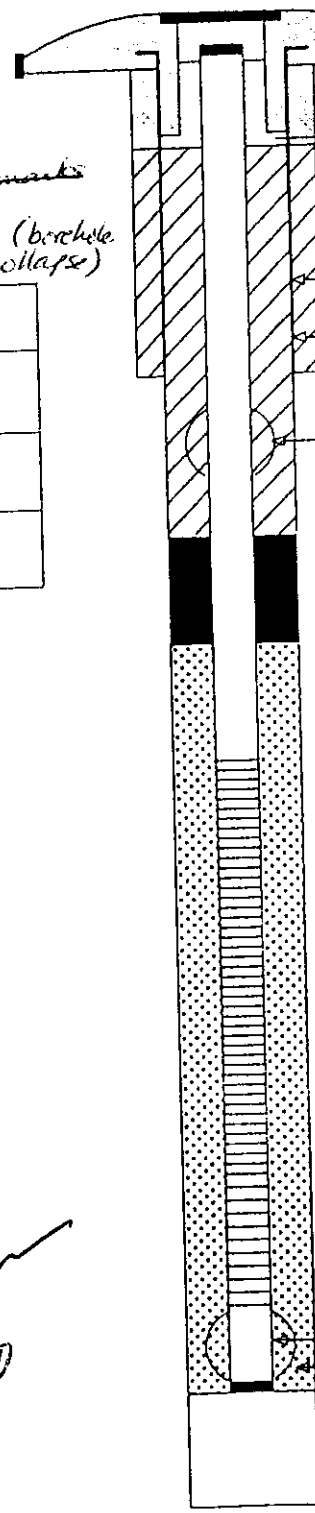

REW Akbar 11/15/00

DOUBLE-FORM PUCHACK.GPJ FEDERAL.GDT 6/28/00

DWR-138 M
11/96

New Jersey Department of Environmental Protection
Bureau of Water Allocation

MONITORING WELL RECORD

Well Permit No. 31 - 59201

Atlas Sheet Coordinates 31 - 02 - 287

OWNER IDENTIFICATION - Owner OVERNITE TRANSPORTATION
Address 1215 SHERMAN AVE.
City PENNSAUKEN State NJ Zip Code

WELL LOCATION - If not the same as owner please give address. Owner's Well No. MW 14D
County CAMDEN Municipality PENNSAUKEN TWP Lot No. 10 Block No. 1102
Address 1215 SHERMAN AVENUE

DATE WELL STARTED 11/16/00
DATE WELL COMPETED 11/21/00

TYPE OF WELL (as per Well Permit Categories) MONITORING
Regulatory Program Requiring Well Case I.D.#

CONSULTING FIRM/FIELD SUPERVISOR (if applicable) CDM Federal Programs Tele. # 212-785-9623

WELL CONSTRUCTION

Total depth drilled 245 ft.
Well finished to 235 ft.

Borehole diameter:
Top 12 in.
Bottom 8 in.

Well was finished: ☐ above grade ☒ flush mounted

If finished above grade, casing height (stick up) above land surface ____ ft.

Was steel protective casing installed? ☒ Yes ☐ No

Static water level after drilling 61.75 ft.

Water level was measured using M Tape

Well was developed for 4 hours at 25 gpm

Method of development Submersible

Was permanent pumping equipment installed? ☐ Yes ☒ No

Pump capacity NA gpm

Pump type: NA

Drilling Fluid Bentonite Type of Rig Failing 1500

Health and Safety Plan submitted? ☒ Yes ☐ No

Level of Protection used on site (circle one) None D C B A

Note: Measure all depths from land surface	Depth to Top (ft.)	Depth to Bottom (ft.)	Diameter (inches)	Material	Wgt./Rating (lbs/sch no.)
Single/Inner Casing	0	220	4"	PVC	Sch 40
Middle Casing (for triple cased wells only)					
Outer Casing (largest diameter)	0	184	8"	Steel	Sch 40
Open Hole or Screen (No. Used 010)	220	230	4"	PVC	Sch 40
Blank Casings (No. Used)					
Tail Piece					
Gravel Pack	215	245		#1 Marie	
Grout	0	184		Neat Cement	1400 lbs.
	0	215		Bentonite	500 lbs.

Grouting Method Pressure Tremie
Drilling Method Mud Rotary

I certify that I have constructed the above referenced well in accordance with all well permit requirements and applicable State rules and regulations.

Drilling Company UNI-TECH DRILLING
Well Driller (Print) Karl Hitzelberger
Driller's Signature Karl Hitzelberger
Registration No. 711530 Date 7/16/01

GEOLOGIC LOG

Note each depth where water was encountered in consolidated formations.

0-40 sand and gravel, trace clay and silt
40-76 brown sand w/ clay layers
76-216 sand trace clay & mica
216-245 gray sand

COPIES: White - DEP Canary - Driller Pink - Owner Goldenrod - Health Dept.

THIS FORM MUST BE COMPLETED BY THE PERMITTEE OR HIS/HER AGENT

GROUND WATER MONITORING WELL CERTIFICATION - FORM B - LOCATION CERTIFICATION

Name of Permittee: U.S. Environmental Protection Agency
Name of Facility: Puchack Well Field Superfund Site
Location: Pennsauken Township, New Jersey
NJPDES Number:

LAND SURVEYOR'S CERTIFICATION

Well Permit Number (As assigned by NJDEP's Bureau of Water Allocation): 31-59201-
This number must be permanently affixed to the well casing.
Datum: NAD 1983 Horizontal - NGVD 1929 Vertical
Longitude (one-tenth of a second): West 75° 03' 14.3"
Latitude (one-tenth of a second): North 39° 58' 13.2"

North 414593.7'
East 336871.2'

Elevation of Top of Casing (cap off) (one-hundredth of a foot): WC = 58.16' IC = 57.91' GR= 58.16'
Owners Well Number (As shown on application or plans): MW-14D

BENCHMARK - NGS Monument "D 100" **ELEVATION** - 44.55'
GEOGRAPHIC POSITION - North 39° 58' 25"
West 75° 03' 37"
DATE OF SURVEY - June, 2001

AUTHENTICATION

I certify under penalty of law that I have personally examined and am familiar with the information submitted in this document and all attachments and that, based on my inquiry of those individuals immediately responsible for obtaining the information, I believe the submitted information is true, accurate and complete. I am aware that there are significant penalties for submitting false information including the possibility of fine and imprisonment.

Paul J Emilius Jr.

PROFESSIONAL LAND SURVEYOR'S SIGNATURE

Paul J. Emilius, Jr.
PROFESSIONAL LAND SURVEYOR'S NAME
(Please print or type)

SEAL

New Jersey P.L.S. License No. 37186
PROFESSIONAL LAND SURVEYOR'S LICENSE #

The Department reserves the right in cases of violation of permit specified ground water limits or Ground Water Qu Standards (N.J.A.C. 7:9-6.1 et seq.) to require that wells be resurveyed to an accuracy of one-hundredth of a second latitu and longitude. This shall not be considered to be a major modification of the N.J.P.D.E.S. permit.

formb.doc

CDM Federal Programs Corporation

Double-Cased Monitoring Well

Client:	U.S. Environmental Protection Agency	Well No.:	MW 14-I
Site Name:	Puchack Well Field (3220-002)	Location:	Sherman Ave.
Project Location:	Pennsauken, New Jersey	Drilling Date(s):	11/8 — 15/00
Drilling Contractor:	Uni-Tech Drilling Co.	Initial Water Level (ft. bgs):	
Drill Rig:	FAILING 1500	Geologist:	M. AKBAR
Drilling Method:	MUD ROTARY	North: East:	Elevation (ft.amsl):
		Depth to Bottom (ft. bgs):	170'

Annular Space Details

Type of Surface Seal:

Type of Annular Grout: Portland Type II CEMENT/BENTONITE GROUT

Type of Seal: Filter Pro No. 00 SAND

Type of Filter Pack: Filter Pro No. 1 SAND see remarks

Type of Backfill: ~~No 1 Sand & Cement/Bentonite Grout~~

Well Construction Materials

	Diameter	Type of Material
Screen	4"	SCH 40 PVC
Riser Casing	4"	SCH 40 PVC
Flush Mount Type		

Measurements

Outer Casing Depth (ft. bgs)	152
Riser pipe length (ft)	165
Screen length (ft)	5
Screen slot size (in)	0.010
Depth to water (ft. bgs)	
Depth to bedrock (ft. bgs)	274

Designed by: DICK WALKER

Affiliation: USGS

REMARKS: backfill:
170-171: Filter Pro #1 Sand
171-176: Filter Pro #00 Sand
176-179: natural material (borehole collapse)
179-171: Portland Type II cement/bentonite grout
171-285: Filter Pro #1 Sand

NOT TO SCALE

R L Walker 11/13/00

Depths - (feet below ground surface)

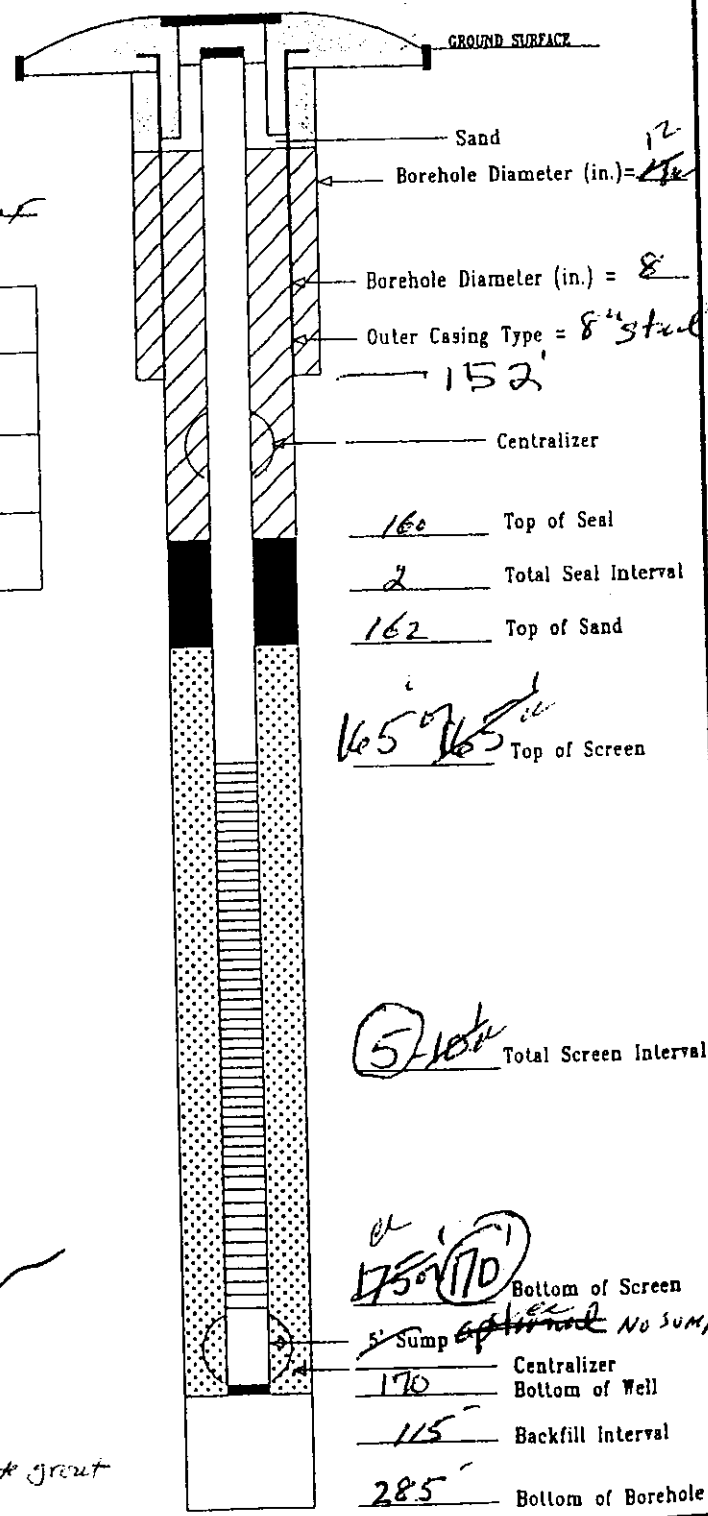

DOUBLE-FORM PUCHACK.GPJ FEDERAL.GDT 8/28/00

DWR-138 M
11/96

New Jersey Department of Environmental Protection
Bureau of Water Allocation

MONITORING WELL RECORD

Well Permit No. 31 - 57202

Atlas Sheet Coordinates 31 02 287

OWNER IDENTIFICATION - Owner OVERNITE TRANSPORTATION
Address 1215 SHERMAN AVE.
City PENNSAUKEN State NJ Zip Code

WELL LOCATION - If not the same as owner please give address. Owner's Well No. MW 14 I
County CAMDEN Municipality PENNSAUKEN TWP Lot No. 10 Block No. 1102
Address 1215 SHERMAN AVENUE

DATE WELL STARTED 11/8/00
DATE WELL COMPETED 11/15/00

TYPE OF WELL (as per Well Permit Categories) MONITORING
Regulatory Program Requiring Well Case I.D.#

CONSULTING FIRM/FIELD SUPERVISOR (if applicable) CDM Federal Programs Tele. # 212-785-9623

WELL CONSTRUCTION

Total depth drilled 285 ft.
Well finished to 170 ft.

Borehole diameter:
Top 12 in.
Bottom 8 in.

Well was finished: ☐ above grade ☒ flush mounted

If finished above grade, casing height (stick up) above land surface ____ ft.

Was steel protective casing installed? ☒ Yes ☐ No

Static water level after drilling 20.18 ft.

Water level was measured using M-Scope

Well was developed for 4 hours at 25 gpm

Method of development Submersible

Was permanent pumping equipment installed? ☐ Yes ☒ No

Pump capacity NA gpm

Pump type: NA

Drilling Fluid Bentonite Type of Rig Failing 1500

Health and Safety Plan submitted? ☒ Yes ☐ No

Level of Protection used on site (circle one) None D C B A

Note: Measure all depths from land surface	Depth to Top (ft.)	Depth to Bottom (ft.)	Diameter (inches)	Material	Wgt./Rating (lbs/sch no.)
Single/Inner Casing	0	165	4"	PVC	Sch 40
Middle Casing (for triple cased wells only)					
Outer Casing (largest diameter)	0	152	8"	Steel	Sch 40
Open Hole or Screen (No. Used .010)	165	170	4"	PVC	Sch 40
Blank Casings (No. Used)					
Tail Piece					
Gravel Pack	160	285		#1 Morie	
Grout	0	152		Neat Cement	1600 lbs.
	0	160		Bentonite	450 lbs.

Grouting Method Pressure Tremie
Drilling Method Mud Rotary

GEOLOGIC LOG

Note each depth where water was encountered in consolidated formations.

0-40 sand and gravel
40-185 brown sand w/ clay layers
185-285 sand & gravel w/ decomposed rock

I certify that I have constructed the above referenced well in accordance with all well permit requirements and applicable State rules and regulations.

Drilling Company UNI-TECH DRILLING
Well Driller (Print) Karl Hitzelberger
Driller's Signature Karl Hitzelberger
Registration No. M1530 Date 7/6/01

COPIES: White - DEP Canary - Driller Pink - Owner Goldenrod - Health Dept.

THIS FORM MUST BE COMPLETED BY THE PERMITTEE OR HIS/HER AGENT

GROUND WATER MONITORING WELL CERTIFICATION - FORM B - LOCATION CERTIFICATION

Name of Permittee: U.S. Environmental Protection Agency
Name of Facility: Puchack Well Field Superfund Site
Location: Pennsauken Township, New Jersey
NJPDES Number:

LAND SURVEYOR'S CERTIFICATION

Well Permit Number (As assigned by NJDEP's Bureau of Water Allocation): 31-59202-
This number must be permanently affixed to the well casing.
Datum: NAD 1983 Horizontal - NGVD 1929 Vertical
Longitude (one-tenth of a second): West 75° 03' 14.4"
Latitude (one-tenth of a second): North 39° 58' 13.3"

North 414602.5'
East 336862.2'

Elevation of Top of Casing (cap off) (one-hundredth of a foot): WC = 58.53' IC = 58.34' GR= 58.54'
Owners Well Number (As shown on application or plans): MW-14I

BENCHMARK - NGS Monument "D 100"
GEOGRAPHIC POSITION - North 39° 58' 25"
West 75° 03' 37"
DATE OF SURVEY - June, 2001

ELEVATION - 44.55'

AUTHENTICATION

I certify under penalty of law that I have personally examined and am familiar with the information submitted in this document and all attachments and that, based on my inquiry of those individuals immediately responsible for obtaining the information, I believe the submitted information is true, accurate and complete. I am aware that there are significant penalties for submitting false information including the possibility of fine and imprisonment.

Paul J Emilius Jr.

PROFESSIONAL LAND SURVEYOR'S SIGNATURE

Paul J. Emilius, Jr.
PROFESSIONAL LAND SURVEYOR'S NAME
(Please print or type)

SEAL

New Jersey P.L.S. License No. 37186
PROFESSIONAL LAND SURVEYOR'S LICENSE #

The Department reserves the right in cases of violation of permit specified ground water limits or Ground Water Qua Standards (N.J.A.C. 7:9-6.1 et seq.) to require that wells be resurveyed to an accuracy of one-hundredth of a second lati and longitude. This shall not be considered to be a major modification of the N.J.P.D.E.S. permit.

formb.doc

Double-Cased Monitoring Well

CDM Federal Programs Corporation

Client:	U.S. Environmental Protection Agency
Site Name:	Peebeck Well Field (0220-002)
Project Location:	Pennsauken, New Jersey
Drilling Contractor:	Uni-Tech Drilling Co
Drill Rig:	Failing CF1500
Drilling Method:	mud rotary
Well No.:	MW 15D
Location:	[illegible]
Drilling Date(s):	[illegible] - 1/5/00 - 1/11/01
Initial Water Level (ft. bgs):	
Geologist:	[illegible]
North: East:	Elevation (ft.amsl):
Depth to Bottom (ft. bgs):	~~242~~ 230'

Annular Space Details

Type of Surface Seal:

Type of Annular Grout: Portland Type II cement/bentonite

Type of Seal: Filter Pro # 00 Sand

Type of Filter Pack: Filter Pro #1 Sand

Type of Backfill: see remarks

Well Construction Materials

	Diameter	Type of Material
Screen	4"	Sch 40 PVC
Riser Casing	4"	Sch 40 PVC
Flush Mount Type		

Measurements

Outer Casing Depth (ft. bgs)	177'
Riser pipe length (ft)	215
Screen length (ft)	10'
Screen slot size (in)	0.010
Depth to water (ft. bgs)	
Depth to bedrock (ft. bgs)	

Designed by:

Affiliation:

REMARKS: backfill:
230-234: Filter Pro #1 sand
234-242: natural material (borehole collapse)

NOT TO SCALE

Depths - (feet below ground surface)

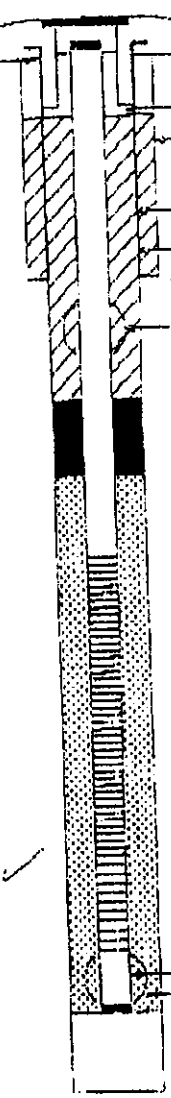

GROUND SURFACE

Sand

Borehole Diameter (in.) = 12"

Borehole Diameter (in.) = 8"

Outer Casing Type = 8" Steel

177'

Centralizer

211' Top of Seal

2' Total Seal Interval

213' Top of Sand

215 Top of Screen

10 Total Screen Interval

225' Bottom of Screen

5' Sump 4"

Centralizer

230 Bottom of Well

12' Backfill Interval

242 Bottom of Borehole

DWR-138 M
11/96

New Jersey Department of Environmental Protection
Bureau of Water Allocation

MONITORING WELL RECORD

Well Permit No. 31 - 59436

Atlas Sheet Coordinates 31 : 02 : 275

OWNER IDENTIFICATION - Owner FRESSENDER HALL INC
Address 1050 SHERMAN AVE
City PENNSAUKEN State NJ Zip Code

WELL LOCATION - If not the same as owner please give address. Owner's Well No. MW15D
County CAMDEN Municipality PENNSAUKEN TWP Lot No. 5 Block No. 1105
Address 1000 SHERMAN AVE

DATE WELL STARTED 1/5/01
DATE WELL COMPETED 1/11/01

TYPE OF WELL (as per Well Permit Categories) MONITORING
Regulatory Program Requiring Well CERCLA Case I.D.# NJD981084767

CONSULTING FIRM/FIELD SUPERVISOR (if applicable) CDM Federal Programs Tele. #

WELL CONSTRUCTION

Total depth drilled 242 ft.
Well finished to 230 ft.

Borehole diameter:
Top 12 in.
Bottom 8 in.

Well was finished: [X] above grade [ ] flush mounted

If finished above grade, casing height (stick up) above land surface 2.1 ft.

Was steel protective casing installed? [X] Yes [ ] No

Static water level after drilling 71.59 ft.

Water level was measured using M Scope

Well was developed for 4 hours at 25 gpm

Method of development Submersible

Was permanent pumping equipment installed? [ ] Yes [X] No

Pump capacity NA gpm

Pump type: NA

Drilling Fluid Bentonite Type of Rig Failing 1500

Health and Safety Plan submitted? [X] Yes [X] No

Level of Protection used on site (circle one) None D C B A

Note: Measure all depths from land surface	Depth to Top (ft.)	Depth to Bottom (ft.)	Diameter (inches)	Material	Wgt./Rating (lbs/sch no.)
Single/Inner Casing	2.1	215	4"	PVC	Sch 40
Middle Casing (for triple cased wells only)					
Outer Casing (largest diameter)	0	177	8"	Steel	Sch 40
Open Hole or Screen (No. Used 010)	215	225	4"	PVC	Sch 40
Blank Casings (No. Used)					
Tail Piece					
Gravel Pack	211	242		#1 Morie	
Grout	8	211		Neat Cement Bentonite	14000 lbs. 300 lbs.

Grouting Method Pressure Tremie
Drilling Method mud Rotary

GEOLOGIC LOG

Note each depth where water was encountered in consolidated formations.

0-64 orange clay
64-124 brown sand, yellow clay and chatter
124-169 yellow-brown m sand
169-220 light gray silty clay
220-242 pale brown sand

I certify that I have constructed the above referenced well in accordance with all well permit requirements and applicable State rules and regulations.

Drilling Company UNI-TECH DRILLING
Well Driller (Print) Karl Hitzelberger
Driller's Signature Karl Hitzelberger
Registration No. M1530 Date 7/6/01

COPIES: White - DEP Canary - Driller Pink - Owner Goldenrod - Health Dept.

THIS FORM MUST BE COMPLETED BY THE PERMITTEE OR HIS/HER AGENT

GROUND WATER MONITORING WELL CERTIFICATION - FORM B - LOCATION CERTIFICATION

Name of Permittee: U.S. Environmental Protection Agency
Name of Facility: Puchack Well Field Superfund Site
Location: Pennsauken Township, New Jersey
NJPDES Number:

LAND SURVEYOR'S CERTIFICATION

Well Permit Number (As assigned by NJDEP's Bureau of Water Allocation): 31-59436-
This number must be permanently affixed to the well casing.
Datum: NAD 1983 Horizontal - NGVD 1929 Vertical
Longitude (one-tenth of a second): West 75° 03' 17.1"
Latitude (one-tenth of a second): North 39° 58' 20.0"

North 415285.2'
East 336656.9'

Elevation of Top of Casing (cap off) (one-hundredth of a foot): WC = 65.21' IC = 64.89' GR= 62.73'
Owners Well Number (As shown on application or plans): MW-15D

BENCHMARK - NGS Monument "D 100"
GEOGRAPHIC POSITION - North 39° 58' 25"
West 75° 03' 37"
DATE OF SURVEY - June, 2001

ELEVATION - 44.55'

AUTHENTICATION

I certify under penalty of law that I have personally examined and am familiar with the information submitted in this document and all attachments and that, based on my inquiry of those individuals immediately responsible for obtaining the information, I believe the submitted information is true, accurate and complete. I am aware that there are significant penalties for submitting false information including the possibility of fine and imprisonment.

Paul J Emilius Jr.

PROFESSIONAL LAND SURVEYOR'S SIGNATURE

Paul J. Emilius, Jr.
PROFESSIONAL LAND SURVEYOR'S NAME
(Please print or type)

SEAL

New Jersey P.L.S. License No. 37186
PROFESSIONAL LAND SURVEYOR'S LICENSE #

The Department reserves the right in cases of violation of permit specified ground water limits or Ground Water Qu Standards (N.J.A.C. 7:9-6.1 et seq.) to require that wells be resurveyed to an accuracy of one-hundredth of a second lati and longitude. This shall not be considered to be a major modification of the N.J.P.D.E.S. permit.

formb.doc

Double-Cased Monitoring Well

CDM Federal Programs Corporation

Client: U.S. Environmental Protection Agency
Site Name: Puchack Well Field (0280-002)
Project Location: Pennsauken, New Jersey
Drilling Contractor: Uni-Tech Drilling Co.
Drill Rig: Failing CF1500
Drilling Method: mud rotary

Well No.: MW2 15 T
Location: 1000 Sherman Ave
Drilling Date(s): ~~1/4~~ 12/20/00 - 1/4/01
Initial Water Level (ft. bgs):
Geologist: Lisa Campbell
North: East: Elevation (ft.msl):
Depth to Bottom (ft. bgs): 169'

Annular Space Details

Type of Surface Seal:
Type of Annular Grout: Portland Type I cement/bentonite
Type of Seal: Filter Pro #00 Sand
Type of Filter Pack: Filter Pro #1 Sand
Type of Backfill: See remarks

Well Construction Materials

	Diameter	Type of Material
Screen	4"	Sch 40 PVC
Riser Casing	4"	Sch 40 PVC
Flush Mount Type		

Measurements

Outer Casing Depth (ft. bgs)	150'
Riser pipe length (ft)	164
Screen length (ft)	10'
Screen slot size (in)	0.010
Depth to water (ft. bgs)	
Depth to bedrock (ft. bgs)	

Designed by:
Affiliation:
REMARKS: RLWalk 1/3/01

NOT TO SCALE

Depths - (feet below ground surface)

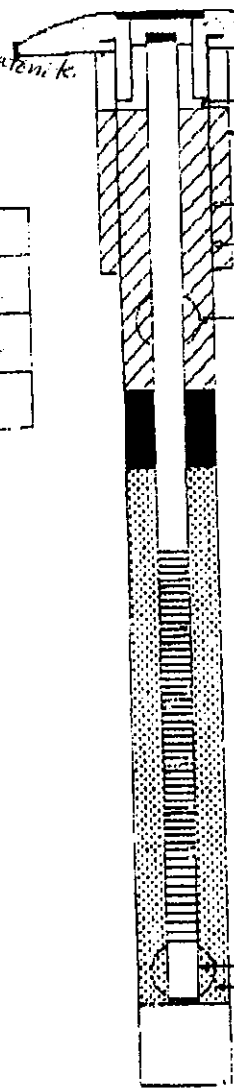

Sand
Borehole Diameter (in.) =
Borehole Diameter (in.) =
Outer Casing Type = B Steel
150'
Centralizer
160' Top of Seal
2' Total Seal Interval
162 Top of Sand
164 Top of Screen
5' Total Screen Interval
169 Bottom of Screen
5' Sump None
Centralizer
169 Bottom of Well
~~170'-815~~ 27' Backfill Interval
~~815~~ 820 Bottom of Borehole

backfill:
169-175: Filter Pro #00 sand
175-180: Portland Type I Cement/bentonite grout
180-220 Filter Pro #1 Sand

DWR-138 M
11/96

New Jersey Department of Environmental Protection
Bureau of Water Allocation

MONITORING WELL RECORD

Well Permit No. 31 - 59437

Atlas Sheet Coordinates 31 : 02 275

OWNER IDENTIFICATION - Owner FRESSENDER HALL INC
Address 1050 SHERMAN AVE
City PENNSAUKEN State NJ Zip Code

WELL LOCATION - If not the same as owner please give address. Owner's Well No. MW 15 I
County CAMDEN Municipality PENNSAUKEN TWP Lot No. 5 Block No. 1105
Address 1000 SHERMAN AVE

DATE WELL STARTED 12/20/00
DATE WELL COMPETED 1/4/01

TYPE OF WELL (as per Well Permit Categories) MONITORING
Regulatory Program Requiring Well CERCLA Case I.D.# NJD981084767

CONSULTING FIRM/FIELD SUPERVISOR (if applicable) CDM Federal Programs Tele. # 212-785-9123

WELL CONSTRUCTION

Total depth drilled 220 ft.
Well finished to 169 ft.

Borehole diameter:
Top 12 in.
Bottom 8 in.

Well was finished: [X] above grade [ ] flush mounted

If finished above grade, casing height (stick up) above land surface 1.84 ft.

Was steel protective casing installed? [X] Yes [ ] No

Static water level after drilling 7.62 ft.

Water level was measured using M-Scope

Well was developed for 4 hours at 25 gpm

Note: Measure all depths from land surface	Depth to Top (ft.)	Depth to Bottom (ft.)	Diameter (inches)	Material	Wgt./Rating (lbs/sch no.)
Single/Inner Casing	+1.84	164	4"	PVC	Sch 40
Middle Casing (for triple cased wells only)					
Outer Casing (largest diameter)	0	150	8"	Steel	Sch 40
Open Hole or Screen (No. Used .010)	164	169	4"	PVC	Sch 40
Blank Casings (No. Used)					
Tail Piece					
Gravel Pack	160	220		#1 Morie	
Grout	0	168		Neat Cement Bentonite	13000 lbs. 275 lbs.

Grouting Method Pressure Tremie
Drilling Method MUD Rotary

Method of development Submersible

Was permanent pumping equipment installed? [ ] Yes [X] No

Pump capacity NA gpm

Pump type: NA

Drilling Fluid Bentonite Type of Rig Failing 1500

Health and Safety Plan submitted? [ ] Yes [X] No

Level of Protection used on site (circle one) None (D) C B A

I certify that I have constructed the above referenced well in accordance with all well permit requirements and applicable State rules and regulations.

Drilling Company UNI-TECH DRILLING

Well Driller (Print) Karl Hitzelberger

Driller's Signature Karl Hitzelberger

Registration No. M1530 Date 7/6/01

GEOLOGIC LOG

Note each depth where water was encountered in consolidated formations.

0-32' gravel and clay
32-64 orange clay
64-124, brown sand, yellow clay and chatter
124-169 yellow-brown M sand
169-220 light gray silty clay

COPIES: White - DEP Canary - Driller Pink - Owner Goldenrod - Health Dept.

THIS FORM MUST BE COMPLETED BY THE PERMITTEE OR HIS/HER AGENT

GROUND WATER MONITORING WELL CERTIFICATION - FORM B - LOCATION CERTIFICATION

Name of Permittee: U.S. Environmental Protection Agency
Name of Facility: Puchack Well Field Superfund Site
Location: Pennsauken Township, New Jersey
NJPDES Number:

LAND SURVEYOR'S CERTIFICATION

Well Permit Number (As assigned by NJDEP's Bureau of Water Allocation): 31-59437-
This number must be permanently affixed to the well casing.
Datum: NAD 1983 Horizontal - NGVD 1929 Vertical
Longitude (one-tenth of a second): West 75° 03' 17.2"
Latitude (one-tenth of a second): North 39° 58' 20.0"

North 415280.6'
East 336648.0'

Elevation of Top of Casing (cap off) (one-hundredth of a foot): WC = 65.61' IC = 65.03' GR= 63.12'
Owners Well Number (As shown on application or plans): MW-15I

BENCHMARK - NGS Monument "D 100"
GEOGRAPHIC POSITION - North 39° 58' 25"
West 75° 03' 37"
DATE OF SURVEY - June, 2001

ELEVATION - 44.55'

AUTHENTICATION

I certify under penalty of law that I have personally examined and am familiar with the information submitted in this document and all attachments and that, based on my inquiry of those individuals immediately responsible for obtaining the information, I believe the submitted information is true, accurate and complete. I am aware that there are significant penalties for submitting false information including the possibility of fine and imprisonment.

Paul J Emilius Jr.

PROFESSIONAL LAND SURVEYOR'S SIGNATURE

Paul J. Emilius, Jr.
PROFESSIONAL LAND SURVEYOR'S NAME
(Please print or type)

SEAL

New Jersey P.L.S. License No. 37186
PROFESSIONAL LAND SURVEYOR'S LICENSE #

The Department reserves the right in cases of violation of permit specified ground water limits or Ground Water Qu Standards (N.J.A.C. 7:9-6.1 et seq.) to require that wells be resurveyed to an accuracy of one-hundredth of a second lati and longitude. This shall not be considered to be a major modification of the N.J.P.D.E.S. permit.

formb.doc

CDM Federal Programs Corporation

Double-Cased Monitoring Well

Client: U.S. Environmental Protection Agency
Site Name: Puchack Well Field (3220-002)
Project Location: Pennsauken, New Jersey
Drilling Contractor: Uni-Tech Drilling Co.
Drill Rig: Failing CF1500
Drilling Method: Mud rotary

Well No.: MW 15M
Location: Behind [illegible]
Drilling Date(s): 1/3/01 1/11/01-1/15/01
Initial Water Level (ft. bgs):
Geologist: Lisa Campbell
North: East: Elevation (ft.amsl):
Depth to Bottom (ft. bgs): 147 / 145

Depths - (feet below ground surface)

Annular Space Details

Type of Surface Seal:
Type of Annular Grout: Portland Type II Cement/bentonite
Type of Seal: Filter Pro #00 Sand
Type of Filter Pack: Filter Pro #1 Sand
Type of Backfill: Filter Pro #1 Sand See remarks

Well Construction Materials

	Diameter	Type of Material
Screen	4"	Sch 40 PVC
Riser Casing	4"	Sch 40 PVC
Flush Mount Type		

Measurements

Outer Casing Depth (ft. bgs)	100'
Riser pipe length (ft)	130
Screen length (ft)	10
Screen slot size (in)	0.010
Depth to water (ft. bgs)	
Depth to bedrock (ft. bgs)	

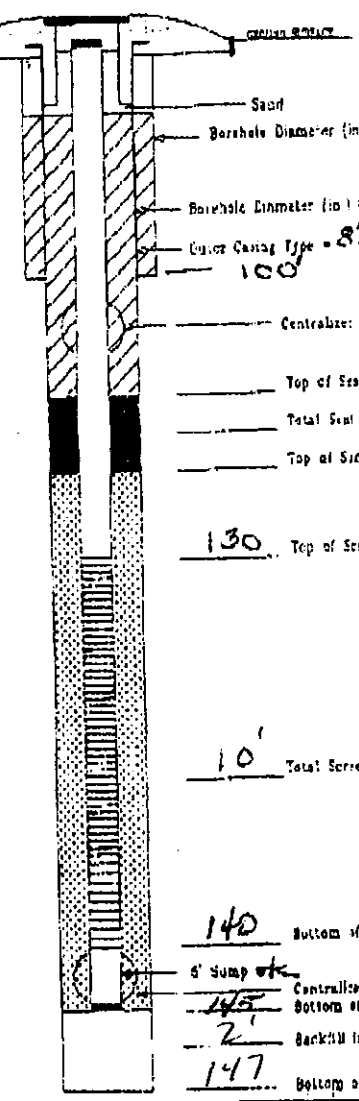

Designed by:
Affiliation:
REMARKS: [signature] 1/3/01

NOT TO SCALE

DWR-138 M
11/96

New Jersey Department of Environmental Protection
Bureau of Water Allocation

MONITORING WELL RECORD

Well Permit No. 31 - 59438

Atlas Sheet Coordinates 31 02 275

OWNER IDENTIFICATION - Owner FRESSENDER HALL INC
Address 1050 SHERMAN AVE
City PENNSAUKEN State NJ Zip Code

WELL LOCATION - If not the same as owner please give address. Owner's Well No. MW 15M
County CAMDEN Municipality PENNSAUKEN TWP Lot No. 5 Block No. 1105
Address 1000 SHERMAN AVE

DATE WELL STARTED 1/11/01
DATE WELL COMPETED 1/15/01

TYPE OF WELL (as per Well Permit Categories) MONITORING
Regulatory Program Requiring Well CERCLA Case I.D.# NJD981084767

CONSULTING FIRM/FIELD SUPERVISOR (if applicable) CDM Federal Programs Tele. #

WELL CONSTRUCTION

Total depth drilled 147 ft.
Well finished to 145 ft.

Borehole diameter:
Top 12 in.
Bottom 8 in.

Well was finished: [X] above grade
[ ] flush mounted

If finished above grade, casing height (stick up) above land surface 1.93 ft.

Was steel protective casing installed?
[X] Yes [ ] No

Static water level after drilling 76.51 ft.

Water level was measured using M. Sope

Well was developed for 4 hours
at 25 gpm

Method of development Submersible

Was permanent pumping equipment installed? [ ] Yes [X] No

Pump capacity NA gpm

Pump type: NA

Drilling Fluid Bentonite Type of Rig Failing 1500

Health and Safety Plan submitted? [X] Yes [ ] No

Level of Protection used on site (circle one) None D C B A

Note: Measure all depths from land surface	Depth to Top (ft.)	Depth to Bottom (ft.)	Diameter (inches)	Material	Wgt./Rating (lbs/sch no.)
Single/Inner Casing	+1.93	130	4"	PVC	Sch 40
Middle Casing (for triple cased wells only)					
Outer Casing (largest diameter)	0	100	8"	Steel	Sch 40
Open Hole or Screen (No. Used .010)	130	140	4"	PVC	Sch 40
Blank Casings (No. Used)					
Tail Piece					
Gravel Pack	123	147		#1 Morie	
Grout	0	100		Neat Cement	8000 lbs.
	0	120		Bentonite	200 lbs.

Grouting Method Pressure Tremie
Drilling Method Mud Rotary

GEOLOGIC LOG

Note each depth where water was encountered in consolidated formations.

0-32 gravel and clay
32-64 orange clay
64-147 brown sand

I certify that I have constructed the above referenced well in accordance with all well permit requirements and applicable State rules and regulations.

Drilling Company UNI-TECH DRILLING
Well Driller (Print) Karl Hitzelberger
Driller's Signature Karl Hitzelberger
Registration No. M1530 Date 7/6/01

COPIES: White - DEP Canary - Driller Pink - Owner Goldenrod - Health Dept.

THIS FORM MUST BE COMPLETED BY THE PERMITTEE OR HIS/HER AGENT

GROUND WATER MONITORING WELL CERTIFICATION - FORM B - LOCATION CERTIFICATION

Name of Permittee: U.S. Environmental Protection Agency
Name of Facility: Puchack Well Field Superfund Site
Location: Pennsauken Township, New Jersey
NJPDES Number:

LAND SURVEYOR'S CERTIFICATION

Well Permit Number (As assigned by NJDEP's Bureau of Water Allocation): 31-59438-
This number must be permanently affixed to the well casing.
Datum: NAD 1983 Horizontal - NGVD 1929 Vertical
Longitude (one-tenth of a second): West 75° 03' 17.3"
Latitude (one-tenth of a second): North 39° 58' 19.9"

North 415275.5'
East 336638.7'

Elevation of Top of Casing (cap off) (one-hundredth of a foot): WC = 65.44' IC = 65.02' GR= 63.04'
Owners Well Number (As shown on application or plans): MW-15M

BENCHMARK - NGS Monument "D 100"
GEOGRAPHIC POSITION - North 39° 58' 25"
West 75° 03' 37"
DATE OF SURVEY - June, 2001

ELEVATION - 44.55'

AUTHENTICATION

I certify under penalty of law that I have personally examined and am familiar with the information submitted in this document and all attachments and that, based on my inquiry of those individuals immediately responsible for obtaining the information, I believe the submitted information is true, accurate and complete. I am aware that there are significant penalties for submitting false information including the possibility of fine and imprisonment.

Paul J Emilius Jr.

PROFESSIONAL LAND SURVEYOR'S SIGNATURE

Paul J. Emilius, Jr.
PROFESSIONAL LAND SURVEYOR'S NAME
(Please print or type)

SEAL

New Jersey P.L.S. License No. 37186
PROFESSIONAL LAND SURVEYOR'S LICENSE #

The Department reserves the right in cases of violation of permit specified ground water limits or Ground Water Qu Standards (N.J.A.C. 7:9-6.1 et seq.) to require that wells be resurveyed to an accuracy of one-hundredth of a second lat. and longitude. This shall not be considered to be a major modification of the N.J.P.D.E.S. permit.

formb.doc

CDM Federal Programs Corporation

Double-Cased Monitoring Well

Client: U.S. Environmental Protection Agency
Site Name: Puchack Well Field (3220-002)
Project Location: Pennsauken, New Jersey
Drilling Contractor: Uni-Tech Drilling Co.
Drill Rig: ~~MUD ROTARY~~ FAILING 1500
Drilling Method: ~~MUD ROTARY~~

Well No.: MW-16D
Location: River Rd & Thomas
Drilling Date(s): 10/19/00 10/24/00
Initial Water Level (ft. bgs):
Geologist: M Akbar
North: East: Elevation (ft.amsl):
Depth to Bottom (ft. bgs): ~~195~~ 182'

Annular Space Details

Type of Surface Seal:
Type of Annular Grout: Portland Type II CEMENT/BENTONITE
Type of Seal: Filter Pro No. 00 SAND
Type of Filter Pack: Filter Pro NO. 1 SAND
Type of Backfill: Filter Pro NO. 1 SAND

Well Construction Materials

	Diameter	Type of Material
Screen	4"	PVC Sch 40
Riser Casing	4"	PVC Sch 40
Flush Mount Type		

Measurements

Outer Casing Depth (ft. bgs)	133.5'
Riser pipe length (ft)	157'
Screen length (ft)	10
Screen slot size (in)	0.010
Depth to water (ft. bgs)	
Depth to bedrock (ft. bgs)	

Designed by: DICK WALKER
Affiliation: USGS
REMARKS:

R Walker 10/23/00

NOT TO SCALE

Depths - (feet below ground surface)

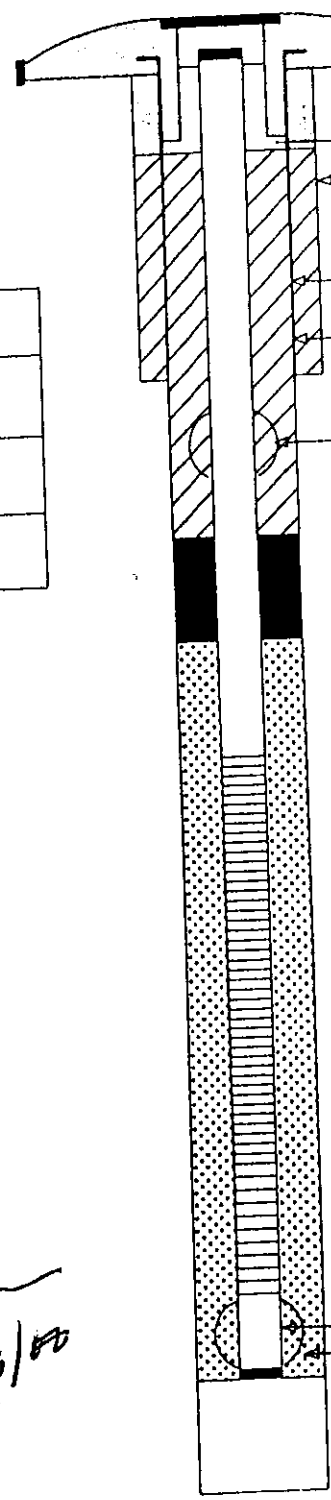

GROUND SURFACE
Sand
Borehole Diameter (in.) = 12"
Borehole Diameter (in.) = 8"
Outer Casing Type = 8" Steel
133'12
Centralizer
162.5' Top of Seal
2.5' Total Seal Interval
165' Top of Sand
167' Top of Screen
10' Total Screen Interval
177' Bottom of Screen
5' Sump
Centralizer
182' Bottom of Well
11' Backfill Interval
193' Bottom of Borehole

DOUBLE-FORM PUCHACK.GPJ FEDERAL.GPT 6/28/00

DWR 438 M
11/98

New Jersey Department of Environmental Protection
Bureau of Water Allocation

MONITORING WELL RECORD

Well Permit No. 31 - 58623

Atlas Sheet Coordinates 31 : 02 273

OWNER IDENTIFICATION - Owner HESS OIL COMPANY
Address HESS PLAZA, WOODBRIDGE PLAZA
City WOODBRIDGE State NJ Zip Code

WELL LOCATION - If not the same as owner please give address. Owner's Well No. MW 16 D
County CAMDEN Municipality PENNSAUKEN TWP Lot No. 1 Block No. 1104
Address RIVER ROAD

DATE WELL STARTED 10/19/00
DATE WELL COMPLETED 10/24/00

TYPE OF WELL (as per Well Permit Categories) MONITORING
Regulatory Program Requiring Well Case I.D.#

CONSULTING FIRM/FIELD SUPERVISOR (if applicable) CDM Federal Programs Tele. # 212-785-9123

WELL CONSTRUCTION

Total depth drilled 193 ft.
Well finished to 182 ft.

Borehole diameter:
Top 12 in.
Bottom 8 in.

Well was finished: ☐ above grade ☒ flush mounted

If finished above grade, casing height (stick up) above land surface ____ ft.

Was steel protective casing installed? ☒ Yes ☐ No

Static water level after drilling 14.78 ft.

Water level was measured using M Scope

Well was developed for 4 hours at 95 gpm

Method of development Submersible

Was permanent pumping equipment installed? ☐ Yes ☒ No

Pump capacity NA gpm

Pump type: NA

Drilling Fluid Bentonite Type of Rig Failing 1500

Health and Safety Plan submitted? ☒ Yes ☐ No

Level of Protection used on site (circle one) None (D) C B A

Note: Measure all depths from land surface	Depth to Top (ft.)	Depth to Bottom (ft.)	Diameter (inches)	Material	Wgt./Rating (lbs/sch no.)
Single/Inner Casing	0	157	4"	PVC	Sch 40
Middle Casing (for triple cased wells only)					
Outer Casing (largest diameter)	0	133.5	8"	Steel	Sch 40
Open Hole or Screen (No. Used 010)	167	177	4"	PVC	Sch 40
Blank Casings (No. Used)					
Tail Piece					
Gravel Pack	162.5	193		#1 Morie	
Grout	0 0	133.5 162.5		Neat Cement Bentonite	1350 lbs. 200 lbs.

Grouting Method Pressure Tremie
Drilling Method Mud Rotary

GEOLOGIC LOG

Note each depth where water was encountered in consolidated formations.

0-20 sand, some gravel
20-45 clayey silt and sand
45-120 sand and gravel
120-180 Light gray sand, trace clay
180-193 sand and gravel, trace clay

I certify that I have constructed the above referenced well in accordance with all well permit requirements and applicable State rules and regulations.

Drilling Company UNI-TECH DRILLING

Well Driller (Print) Karl Hitzelberger

Driller's Signature Karl Hitzelberger

Registration No. M1530 Date 7/6/01

COPIES: White - DEP Canary - Driller Pink - Owner Goldenrod - Health Dept.

THIS FORM MUST BE COMPLETED BY THE PERMITTEE OR HIS/HER AGENT

GROUND WATER MONITORING WELL CERTIFICATION - FORM B - LOCATION CERTIFICATION

Name of Permittee: U.S. Environmental Protection Agency
Name of Facility: Puchack Well Field Superfund Site
Location: Pennsauken Township, New Jersey
NJPDES Number:

LAND SURVEYOR'S CERTIFICATION

Well Permit Number (As assigned by NJDEP's Bureau of Water Allocation): 31-58623-
This number must be permanently affixed to the well casing.
Datum: NAD 1983 Horizontal - NGVD 1929 Vertical
Longitude (one-tenth of a second): West 75° 03' 29.2"
Latitude (one-tenth of a second): North 39° 58' 33.6"

North 416664.3'
East 335722.7'

Elevation of Top of Casing (cap off) (one-hundredth of a foot): WC = 59.98' IC = 59.35' GR= 59.99'
Owners Well Number (As shown on application or plans): MW-16D

BENCHMARK - NGS Monument "D 100"
GEOGRAPHIC POSITION - North 39° 58' 25"
West 75° 03' 37"
DATE OF SURVEY - June, 2001

ELEVATION - 44.55'

AUTHENTICATION

I certify under penalty of law that I have personally examined and am familiar with the information submitted in this document and all attachments and that, based on my inquiry of those individuals immediately responsible for obtaining the information, I believe the submitted information is true, accurate and complete. I am aware that there are significant penalties for submitting false information including the possibility of fine and imprisonment.

Paul J Emilius Jr.

PROFESSIONAL LAND SURVEYOR'S SIGNATURE

Paul J. Emilius, Jr.
PROFESSIONAL LAND SURVEYOR'S NAME
(Please print or type)

SEAL

New Jersey P.L.S. License No. 37186
PROFESSIONAL LAND SURVEYOR'S LICENSE #

The Department reserves the right in cases of violation of permit specified ground water limits or Ground Water Qu Standards (N.J.A.C. 7:9-6.1 et seq.) to require that wells be resurveyed to an accuracy of one-hundredth of a second la and longitude. This shall not be considered to be a major modification of the N.J.P.D.E.S. permit.

formb.doc

Double-Cased Monitoring Well

CDM Federal Programs Corporation

Client:	U.S. Environmental Protection Agency	Well No.:	MW 16I
Site Name:	Puchack Well Field (3220-002)	Location:	River Rd & Duromac
Project Location:	Pennsauken, New Jersey	Drilling Date(s):	10/25 - 10/26/00
Drilling Contractor:	Uni-Tech Drilling Co.	Initial Water Level (ft. bgs):	
Drill Rig:	FAILING 1500	Geologist:	M Akbar
Drilling Method:	MUD ROTARY	North: East: Elevation (ft.amsl):	
		Depth to Bottom (ft. bgs):	~~120~~ 118'

Annular Space Details

Type of Surface Seal:

Type of Annular Grout: Portland Type CEMENT/BENTONITE

Type of Seal: FilterPro NO. 00 Sand

Type of Filter Pack: FilterPro NO. 1 Sand

Type of Backfill: FilterPro NO. 1 Sand

Well Construction Materials

	Diameter	Type of Material
Screen	4"	PVC SCH 40
Riser Casing	4"	PVC SCH 40
Flush Mount Type		

Measurements

Outer Casing Depth (ft. bgs)	102
Riser pipe length (ft)	108
Screen length (ft)	10
Screen slot size (in)	0.010
Depth to water (ft. bgs)	
Depth to bedrock (ft. bgs)	

Designed by: DICK WALKER

Affiliation: USGS

REMARKS:

R L Walker 10/24/00

NOT TO SCALE

Depths - (feet below ground surface)

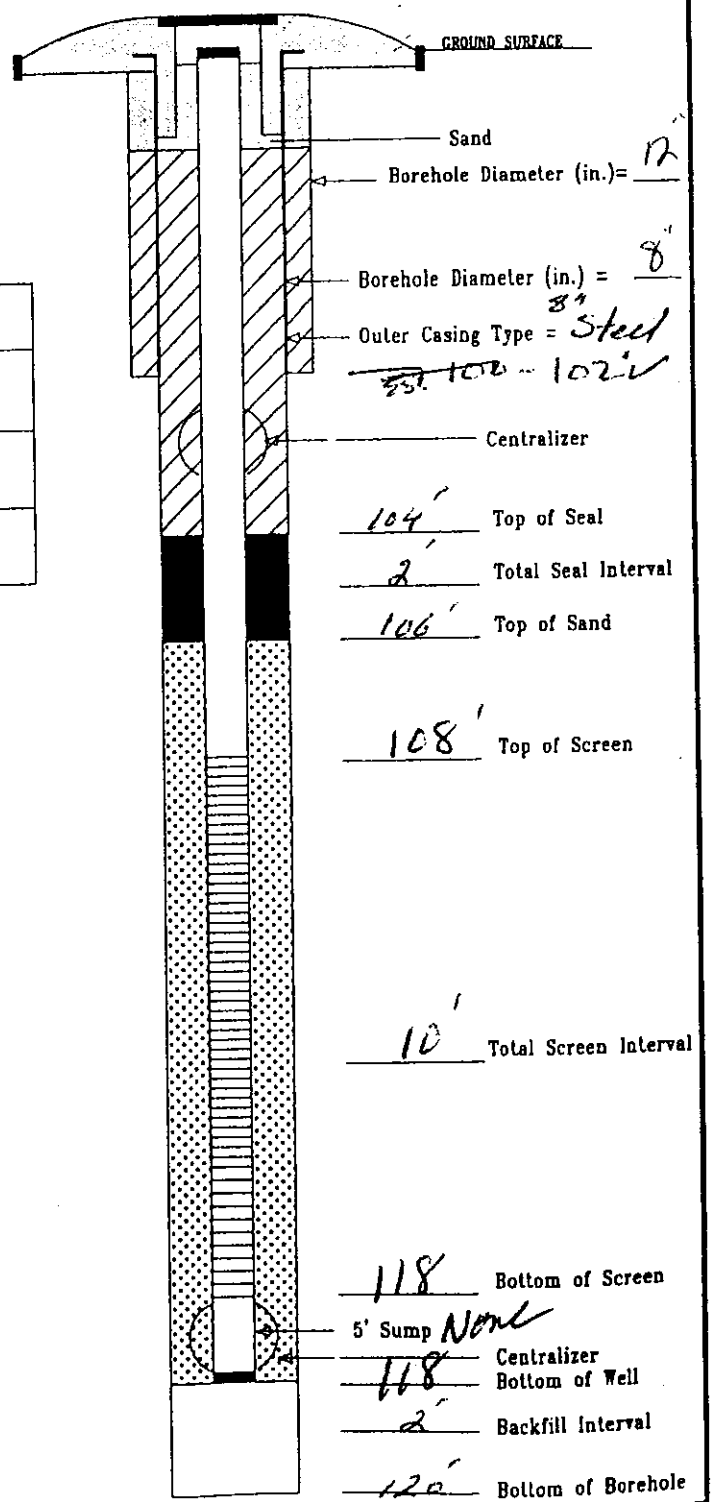

DOUBLE-FORM PUCHACK.CPJ FEDERAL.GDT 6/26/00

DWB-138 M
11/98

New Jersey Department of Environmental Protection
Bureau of Water Allocation

MONITORING WELL RECORD

Well Permit No. 31 - 58624

Atlas Sheet Coordinates 31 : 02 : 273

OWNER IDENTIFICATION - Owner HESS OIL COMPANY
Address HESS PLAZA, WOODBRIDGE PLAZA
City WOODBRIDGE State NJ Zip Code

WELL LOCATION - If not the same as owner please give address. Owner's Well No. MW 16 I
County CAMDEN Municipality PENNSAUKEN TWP Lot No. 1 Block No. 1104
Address RIVER ROAD

DATE WELL STARTED 10/25/00
DATE WELL COMPLETED 10/26/00

TYPE OF WELL (as per Well Permit Categories) MONITORING
Regulatory Program Requiring Well Case I.D.#

CONSULTING FIRM/FIELD SUPERVISOR (if applicable) CDM Federal Programs Tele. # 212-785-9123

WELL CONSTRUCTION

Total depth drilled 120 ft.
Well finished to 118 ft.

Borehole diameter:
Top 12 in.
Bottom 8 in.

Well was finished: ☐ above grade ☒ flush mounted

If finished above grade, casing height (stick up) above land surface ____ ft.

Was steel protective casing installed? ☒ Yes ☐ No

Static water level after drilling 69.57 ft.

Water level was measured using M-Scope

Well was developed for 4 hours at 25 gpm

Method of development AIRLIFT

Was permanent pumping equipment installed? ☐ Yes ☒ No

Pump capacity NA gpm

Pump type: NA

Drilling Fluid Bentonite Type of Rig Failing 1500

Health and Safety Plan submitted? ☒ Yes ☐ No

Level of Protection used on site (circle one) None (D) C B A

Note: Measure all depths from land surface	Depth to Top (ft.)	Depth to Bottom (ft.)	Diameter (inches)	Material	Wgt./Rating (lbs/sch no.)
Single/Inner Casing	0	108	4"	PVC	Sch 40
Middle Casing (for triple cased wells only)					
Outer Casing (largest diameter)	0	102	8"	steel	Sch 40
Open Hole or Screen (No. Used .010)	108	118	4"	PVC	Sch 40
Blank Casings (No. Used)					
Tail Piece					
Gravel Pack	104	120	8	#1 Sand	
Grout	0	102		Neat Cement	1100 lbs.
	0	104		Bentonite	900 lbs.

Grouting Method pressure Tremie
Drilling Method mud Rotary

I certify that I have constructed the above referenced well in accordance with all well permit requirements and applicable State rules and regulations.

Drilling Company UNI-TECH DRILLING

Well Driller (Print) Karl Hitzelberger

Driller's Signature Karl Hitzelberger

Registration No. M1530 Date 6/30/01

GEOLOGIC LOG

Note each depth where water was encountered in consolidated formations.

0-20' sand, some gravel
20-48' Clayey silt and sand
48-120 sand and gravel

COPIES: White - DEP Canary - Driller Pink - Owner Goldenrod - Health Dept.

THIS FORM MUST BE COMPLETED BY THE PERMITTEE OR HIS/HER AGENT

GROUND WATER MONITORING WELL CERTIFICATION - FORM B - LOCATION CERTIFICATION

Name of Permittee: U.S. Environmental Protection Agency
Name of Facility: Puchack Well Field Superfund Site
Location: Pennsauken Township, New Jersey
NJPDES Number:

LAND SURVEYOR'S CERTIFICATION

Well Permit Number (As assigned by NJDEP's Bureau of Water Allocation): 31-58624-
This number must be permanently affixed to the well casing.
Datum: NAD 1983 Horizontal - NGVD 1929 Vertical
Longitude (one-tenth of a second): West 75° 03' 29.3"
Latitude (one-tenth of a second): North 39° 58' 33.5"

North 416655.8'
East 335717.0'

Elevation of Top of Casing (cap off) (one-hundredth of a foot): WC = 59.64' IC = 59.17' GR= 59.64'
Owners Well Number (As shown on application or plans): MW-16I

BENCHMARK - NGS Monument "D 100"
GEOGRAPHIC POSITION - North 39° 58' 25"
West 75° 03' 37"
DATE OF SURVEY - June, 2001

ELEVATION - 44.55'

AUTHENTICATION

I certify under penalty of law that I have personally examined and am familiar with the information submitted in this document and all attachments and that, based on my inquiry of those individuals immediately responsible for obtaining the information, I believe the submitted information is true, accurate and complete. I am aware that there are significant penalties for submitting false information including the possibility of fine and imprisonment.

Paul J Emilius Jr.

PROFESSIONAL LAND SURVEYOR'S SIGNATURE

Paul J. Emilius, Jr.
PROFESSIONAL LAND SURVEYOR'S NAME
(Please print or type)

SEAL

New Jersey P.L.S. License No. 37186
PROFESSIONAL LAND SURVEYOR'S LICENSE #

The Department reserves the right in cases of violation of permit specified ground water limits or Ground Water Qu Standards (N.J.A.C. 7:9-6.1 et seq.) to require that wells be resurveyed to an accuracy of one-hundredth of a second lat and longitude. This shall not be considered to be a major modification of the N.J.P.D.E.S. permit.

formb.doc

CDM Federal Programs Corporation

Single ~~Double~~ Cased Monitoring Well

Client: U.S. Environmental Protection Agency

Site Name: Puchack Well Field (3220-002)

Project Location: Pennsauken, New Jersey

Drilling Contractor: Uni-Tech Drilling Co.

Drill Rig: FAILING 1500

Drilling Method: MUD ROTARY

Well No.: MW-16 M

Location: River Rd & Dermasse

Drilling Date(s): 10/27/00

Initial Water Level (ft. bgs):

Geologist: M Akbar

North: East: Elevation (ft.amsl):

Depth to Bottom (ft. bgs): 89'

Annular Space Details

Type of Surface Seal:

Type of Annular Grout: Portland Type I CEMENT/BENTONITE

Type of Seal: Filtrite NO. 00 SAND

Type of Filter Pack: Filtrite NO. 1 SAND

Type of Backfill: NA

Well Construction Materials

	Diameter	Type of Material
Screen	4"	PVC SCH 40
Riser Casing	4"	PVC SCH 40
Flush Mount Type		

Measurements

Outer Casing Depth (ft. bgs)	NONE
Riser pipe length (ft)	84
Screen length (ft)	5
Screen slot size (in)	0.010
Depth to water (ft. bgs)	
Depth to bedrock (ft. bgs)	

Designed by: DICK WALKER

Affiliation: USGS

REMARKS:

R C Walker 10/24/00

NOT TO SCALE

Depths - (feet below ground surface)

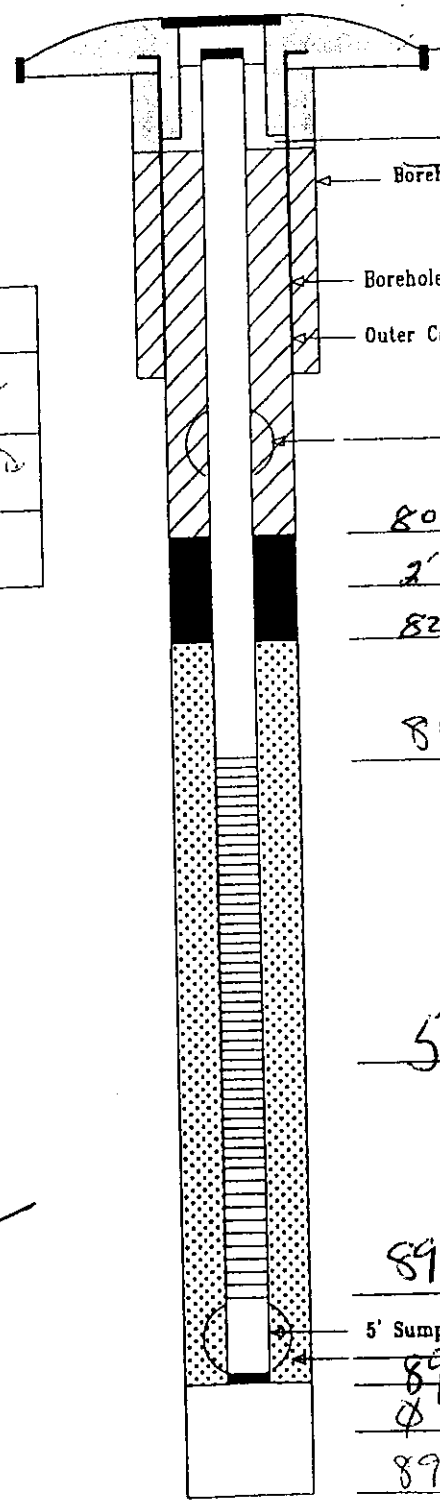

DOUBLE-FORM PUCHACK.GPJ FEDERAL.GDT 6/28/00

DWR-138M
11/98

New Jersey Department of Environmental Protection
Bureau of Water Allocation

MONITORING WELL RECORD

Well Permit No. 31 - 58625

Atlas Sheet Coordinates 31 : 02 : 273

OWNER IDENTIFICATION - Owner HESS OIL COMPANY
Address HESS PLAZA, WOODBRIDGE PLAZA
City WOODBRIDGE State NJ Zip Code

WELL LOCATION - If not the same as owner please give address. Owner's Well No. MW 16M
County CAMDEN Municipality PENNSAUKEN TWP Lot No. 1 Block No. 1104
Address RIVER ROAD

DATE WELL STARTED 10/27/00
DATE WELL COMPLETED 10/27/00

TYPE OF WELL (as per Well Permit Categories) MONITORING
Regulatory Program Requiring Well Case I.D.#

CONSULTING FIRM/FIELD SUPERVISOR (if applicable) CDM Federal Programs Tele. # 212-785-9123

WELL CONSTRUCTION

Total depth drilled 89 ft.
Well finished to 89 ft.

Borehole diameter:
Top 8 in.
Bottom 8 in.

Well was finished: ☐ above grade
☒ flush mounted

If finished above grade, casing height (stick up) above land surface ____ ft.

Was steel protective casing installed? ☒ Yes ☐ No

Static water level after drilling 61.20 ft.

Water level was measured using M. Supe

Well was developed for 4 hours at 85 gpm

Method of development Air lift

Was permanent pumping equipment installed? ☐ Yes ☒ No

Pump capacity NA gpm

Pump type:

Drilling Fluid Bentonite Type of Rig Failing 1500

Health and Safety Plan submitted? ☒ Yes ☐ No

Level of Protection used on site (circle one) None D C B A

Note: Measure all depths from land surface	Depth to Top (ft.)	Depth to Bottom (ft.)	Diameter (inches)	Material	Wgt./Rating (lbs/sch no.)
Single/Inner Casing	0	84	4"	PVC	Sch 40
Middle Casing (for triple cased wells only)					
Outer Casing (largest diameter)					
Open Hole or Screen (No. Used .010)	84	89	4"	PVC	Sch 40
Blank Casings (No. Used)					
Tail Piece					
Gravel Pack	80	89	8	#1 Sand	
Grout	0	80		Neat Cement Bentonite	3000 lbs. 150 lbs.

Grouting Method pressure Tremie
Drilling Method mud Rotary

I certify that I have constructed the above referenced well in accordance with all well permit requirements and applicable State rules and regulations.

Drilling Company UNI-TECH DRILLING
Well Driller (Print) Karl Hitzelberger
Driller's Signature Karl Hitzelberger
Registration No. M1530 Date 6/30/01

GEOLOGIC LOG

Note each depth where water was encountered in consolidated formations.

0-20' sand, some gravel
20-48' clayey silt
48-89' sand and gravel

COPIES: White - DEP Canary - Driller Pink - Owner Goldenrod - Health Dept.

THIS FORM MUST BE COMPLETED BY THE PERMITTEE OR HIS/HER AGENT

GROUND WATER MONITORING WELL CERTIFICATION - FORM B - LOCATION CERTIFICATION

Name of Permittee: U.S. Environmental Protection Agency
Name of Facility: Puchack Well Field Superfund Site
Location: Pennsauken Township, New Jersey
NJPDES Number:

LAND SURVEYOR'S CERTIFICATION

Well Permit Number (As assigned by NJDEP's Bureau of Water Allocation): 31-58625-
This number must be permanently affixed to the well casing.
Datum: NAD 1983 Horizontal - NGVD 1929 Vertical
Longitude (one-tenth of a second): West 75° 03' 29.4"
Latitude (one-tenth of a second): North 39° 58' 33.4"

North 416646.8'
East 335711.5'

Elevation of Top of Casing (cap off) (one-hundredth of a foot): WC = 59.40' IC = 58.99' GR= 59.41'
Owners Well Number (As shown on application or plans): MW-16M

BENCHMARK - NGS Monument "D 100"
GEOGRAPHIC POSITION - North 39° 58' 25"
West 75° 03' 37"
DATE OF SURVEY - June, 2001

ELEVATION - 44.55'

AUTHENTICATION

I certify under penalty of law that I have personally examined and am familiar with the information submitted in this document and all attachments and that, based on my inquiry of those individuals immediately responsible for obtaining the information, I believe the submitted information is true, accurate and complete. I am aware that there are significant penalties for submitting false information including the possibility of fine and imprisonment.

Paul J Emilius Jr.

PROFESSIONAL LAND SURVEYOR'S SIGNATURE

Paul J. Emilius, Jr.
PROFESSIONAL LAND SURVEYOR'S NAME
(Please print or type)

SEAL

New Jersey P.L.S. License No. 37186
PROFESSIONAL LAND SURVEYOR'S LICENSE #

The Department reserves the right in cases of violation of permit specified ground water limits or Ground Water Qu Standards (N.J.A.C. 7:9-6.1 et seq.) to require that wells be resurveyed to an accuracy of one-hundredth of a second lat and longitude. This shall not be considered to be a major modification of the N.J.P.D.E.S. permit.

formb.doc

CDM Federal Programs Corporation

Double-Cased Monitoring Well

Client:	U.S. Environmental Protection Agency	Well No.:	MW-17 D
Site Name:	Puchack Well Field (3220-002)	Location:	Puchack Wellfield
Project Location:	Pennsauken, New Jersey	Drilling Date(s):	9/25/00 – 10/2/00
Drilling Contractor:	Uni-Tech Drilling Co.	Initial Water Level (ft. bgs):	
Drill Rig:	Failing CF1500	Geologist:	Lisa Campbell
Drilling Method:	Mud rotary	North: / East:	Elevation (ft.amsl):
		Depth to Bottom (ft. bgs):	~~212'~~ 185'

Annular Space Details

Type of Surface Seal:

Type of Annular Grout: Portland Type II cement/bentonite

Type of Seal: Filter Pro #00 Sand

Type of Filter Pack: Filter Pro #1 Sand

Type of Backfill: Filter Pro #1 Sand

Well Construction Materials

	Diameter	Type of Material
Screen	4"	Sch 40 PVC
Riser Casing	4"	Sch 40 PVC
Stick-up ~~Flush Mount~~ Type		

Measurements

Outer Casing Depth (ft. bgs)	110'
Riser pipe length (ft)	170
Screen length (ft)	10'
Screen slot size (in)	0.010
Depth to water (ft. bgs)	
Depth to bedrock (ft. bgs)	212'

Depths – (feet below ground surface)

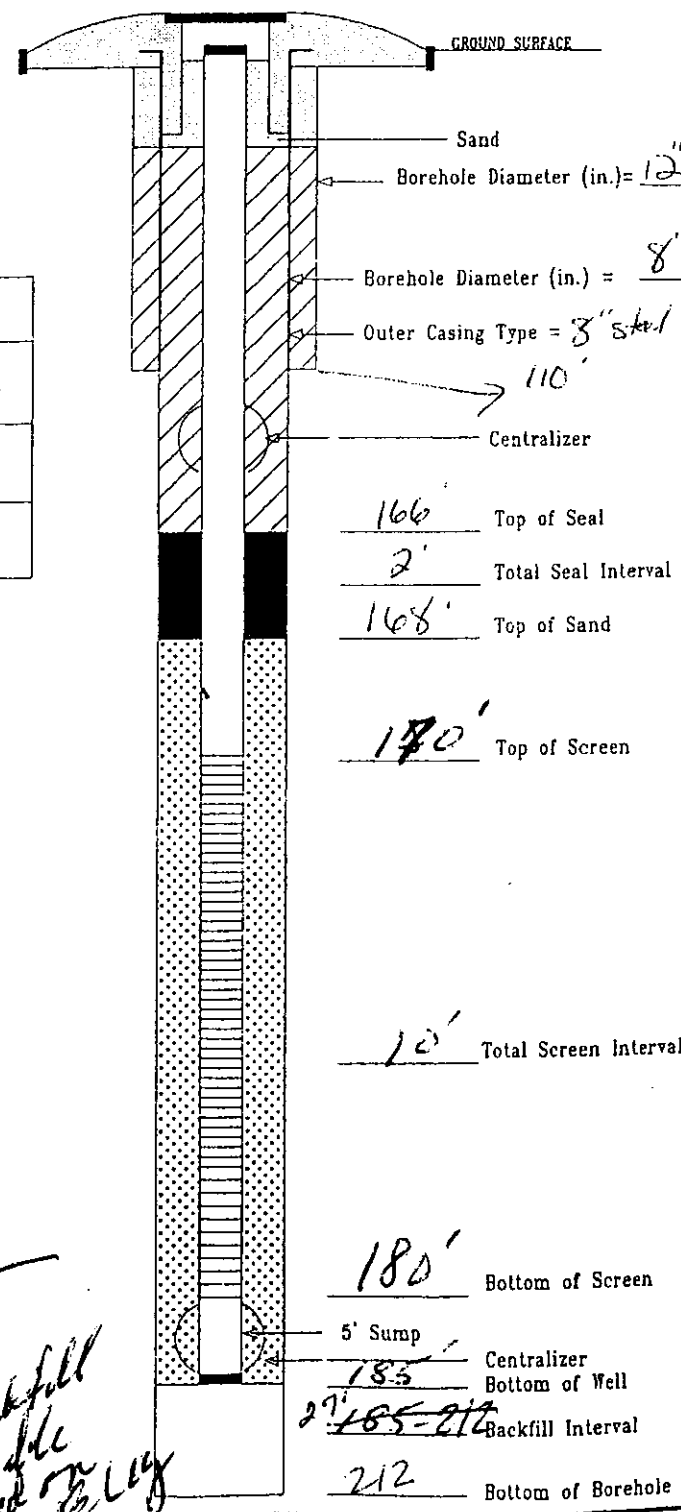

Designed by:

Affiliation:

REMARKS:

9/29/00 Sand backfill acceptable based on BLOG

NOT TO SCALE

DOUBLE-FORM PUCHACK.CPJ FEDERAL.GDT 6/28/00

DWR-138 M
11/98

New Jersey Department of Environmental Protection
Bureau of Water Allocation

MONITORING WELL RECORD

Well Permit No. 31 - 58639

Atlas Sheet Coordinates 31 - 02 - 251

OWNER IDENTIFICATION - Owner CAMDEN CITY UTILITIES AUT
Address 1056 WRIGHT AVENUE
City CAMDEN State NJ Zip Code

WELL LOCATION - If not the same as owner please give address. Owner's Well No. MW-17D
County CAMDEN Municipality PENNSAUKEN TWP Lot No. 1 Block No. 1303
Address DERDUSSE ROAD

DATE WELL STARTED 9/25/00
DATE WELL COMPLETED 10/2/00

TYPE OF WELL (as per Well Permit Categories) MONITORING
Regulatory Program Requiring Well Case I.D.#

CONSULTING FIRM/FIELD SUPERVISOR (if applicable) CDM Federal Programs Tele. # 212-785-9123

WELL CONSTRUCTION

Total depth drilled 212 ft.
Well finished to 185 ft.

Borehole diameter:
Top 12 in.
Bottom 8 in.

Well was finished: ☒ above grade ☐ flush mounted

If finished above grade, casing height (stick up) above land surface 1.8 ft.

Was steel protective casing installed? ☒ Yes ☐ No

Static water level after drilling 36.53 ft.

Water level was measured using M-Scope

Well was developed for 4 hours at 35 gpm

Method of development Submersible

Was permanent pumping equipment installed? ☐ Yes ☒ No

Pump capacity NA gpm

Pump type: NA

Drilling Fluid Bentonite Type of Rig Failing CF1500

Health and Safety Plan submitted? ☒ Yes ☐ No

Level of Protection used on site (circle one) None (D) C B A

Note: Measure all depths from land surface	Depth to Top (ft.)	Depth to Bottom (ft.)	Diameter (inches)	Material	Wgt./Rating (lbs/sch no.)
Single/Inner Casing	+1.8	170	4"	PVC	Sch 40
Middle Casing (for triple cased wells only)					
Outer Casing (largest diameter)	0	110	8"	Steel	Sch 40
Open Hole or Screen (No. Used .010)	170	180	4"	PVC	Sch 40
Blank Casings (No. Used)					
Tail Piece					
Gravel Pack	166	212		#1 Morie	
Grout	0 0	110 166		Neat Cement Bentonite	102000 lbs. 250 lbs.

Grouting Method Pressure Tremie
Drilling Method Mud Rotary

GEOLOGIC LOG

Note each depth where water was encountered in consolidated formations.

0-64 brown M. sand
64-88 clay
88-152 M. sand not white clay
152-192 gravel
192-212 Bedrock

I certify that I have constructed the above referenced well in accordance with all well permit requirements and applicable State rules and regulations.

Drilling Company UNI TECH DRILLING

Well Driller (Print) Karl Hitzelberger

Driller's Signature Karl Hitzelberger

Registration No. M1530 Date 7/6/01

COPIES: White - DEP Canary - Driller Pink - Owner Goldenrod - Health Dept.

THIS FORM MUST BE COMPLETED BY THE PERMITTEE OR HIS/HER AGENT

GROUND WATER MONITORING WELL CERTIFICATION - FORM B - LOCATION CERTIFICATION

Name of Permittee: U.S. Environmental Protection Agency
Name of Facility: Puchack Well Field Superfund Site
Location: Pennsauken Township, New Jersey
NJPDES Number:

LAND SURVEYOR'S CERTIFICATION

Well Permit Number (As assigned by NJDEP's Bureau of Water Allocation): 31-58639-
This number must be permanently affixed to the well casing.
Datum: NAD 1983 Horizontal - NGVD 1929 Vertical
Longitude (one-tenth of a second): West 75° 03' 04.5"
Latitude (one-tenth of a second): North 39° 58' 36.7"

North 416964.4'
East 337647.5'

Elevation of Top of Casing (cap off) (one-hundredth of a foot): WC = 25.04' IC = 24.16' GR= 22.25'
Owners Well Number (As shown on application or plans): MW-17D

BENCHMARK - NGS Monument "D 100" **ELEVATION** - 44.55'
GEOGRAPHIC POSITION - North 39° 58' 25"
West 75° 03' 37"
DATE OF SURVEY - June, 2001

AUTHENTICATION

I certify under penalty of law that I have personally examined and am familiar with the information submitted in this document and all attachments and that, based on my inquiry of those individuals immediately responsible for obtaining the information, I believe the submitted information is true, accurate and complete. I am aware that there are significant penalties for submitting false information including the possibility of fine and imprisonment.

Paul J Emilius Jr.

PROFESSIONAL LAND SURVEYOR'S SIGNATURE

Paul J. Emilius, Jr.
PROFESSIONAL LAND SURVEYOR'S NAME
(Please print or type)

SEAL

New Jersey P.L.S. License No. 37186
PROFESSIONAL LAND SURVEYOR'S LICENSE #

The Department reserves the right in cases of violation of permit specified ground water limits or Ground Water Q Standards (N.J.A.C. 7:9-6.1 et seq.) to require that wells be resurveyed to an accuracy of one-hundredth of a second lat... and longitude. This shall not be considered to be a major modification of the N.J.P.D.E.S. permit.

formb.doc

CDM Federal Programs Corporation

Double-Cased Monitoring Well

Client: U.S. Environmental Protection Agency
Site Name: Puchack Well Field (3220-002)
Project Location: Pennsauken, New Jersey
Drilling Contractor: Uni-Tech Drilling Co.
Drill Rig: Failing CF1500
Drilling Method: Mud Rotary

Well No.: MW-17 I
Location: Puchack Well Field
Drilling Date(s): 10-3-00 — 10/6/00
Initial Water Level (ft. bgs):
Geologist: L. Campbell
North: East: Elevation (ft.amsl):
Depth to Bottom (ft. bgs): 105'

Annular Space Details

Type of Surface Seal:
Type of Annular Grout: Portland Type II cement/bentonite
Type of Seal: Gilsonite #10 sand
Type of Filter Pack: Gilsonite #1 sand
Type of Backfill: NA

Well Construction Materials

	Diameter	Type of Material
Screen	4"	Sch 40 PVC ~~0.010 slot~~
Riser Casing	4"	Sch 40 PVC
~~Flush Mount~~ Stick-up Type		

Measurements

Outer Casing Depth (ft. bgs)	70'
Riser pipe length (ft)	90
Screen length (ft)	10'
Screen slot size (in)	0.010
Depth to water (ft. bgs)	
Depth to bedrock (ft. bgs)	

Designed by:
Affiliation:

REMARKS:

NOT TO SCALE

Depths - (feet below ground surface)

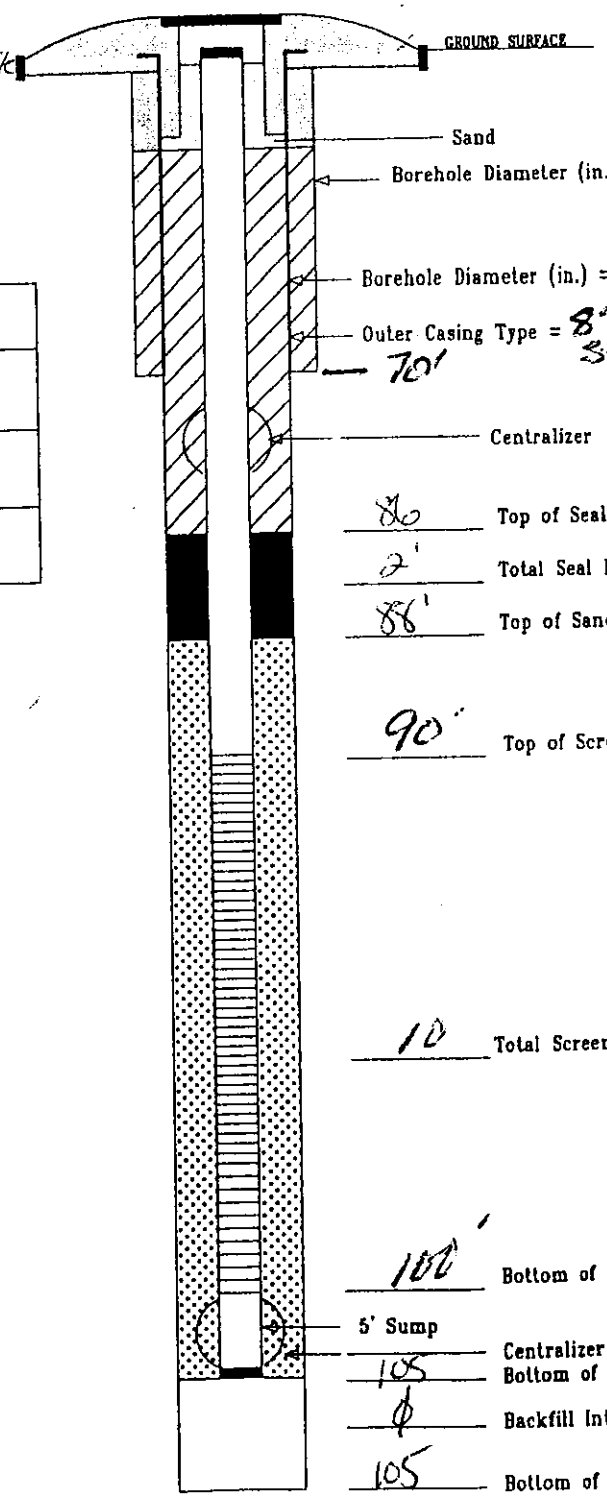

DOUBLE-FORM PUCHACK.GPJ FEDERAL.GDT 6/28/00

DWR-138 M
11/98

New Jersey Department of Environmental Protection
Bureau of Water Allocation

MONITORING WELL RECORD

Well Permit No. 31 : 58640

Atlas Sheet Coordinates 31 : 02 257

OWNER IDENTIFICATION - Owner CAMDEN CITY UTILITIES AUT
Address 1056 WRIGHT AVENUE
City CAMDEN State NJ Zip Code

WELL LOCATION - If not the same as owner please give address. Owner's Well No. MW-17B I
County CAMDEN Municipality PENNSAUKEN TWP Lot No. 1 Block No. 1303
Address DEROUSSE ROAD

DATE WELL STARTED 10/3/00
DATE WELL COMPLETED 10/6/00

TYPE OF WELL (as per Well Permit Categories) MONITORING
Regulatory Program Requiring Well Case I.D.#

CONSULTING FIRM/FIELD SUPERVISOR (if applicable) CDM Federal Programs Tele. # 212-785-9123

WELL CONSTRUCTION

Total depth drilled 105 ft.
Well finished to 105 ft.

Borehole diameter:
Top 12 in.
Bottom 8 in.

Well was finished: [X] above grade [ ] flush mounted

If finished above grade, casing height (stick up) above land surface 1.75 ft.

Was steel protective casing installed? [X] Yes [ ] No

Static water level after drilling 35.46 ft.

Water level was measured using M-Tape

Well was developed for 4 hours at 25 gpm

Method of development Airlift

Was permanent pumping equipment installed? [ ] Yes [X] No

Pump capacity NA gpm

Pump type:

Drilling Fluid Bentonite Type of Rig 1500 failing

Health and Safety Plan submitted? [X] Yes [ ] No

Level of Protection used on site (circle one) None D C B A

Note: Measure all depths from land surface	Depth to Top (ft.)	Depth to Bottom (ft.)	Diameter (inches)	Material	Wgt./Rating (lbs/sch no.)
Single/Inner Casing	+1.75	90	4"	PVC	Sch 40
Middle Casing (for triple cased wells only)					
Outer Casing (largest diameter)	0	70	4"	PVC	Sch 40
Open Hole or Screen (No. Used 010)	90	100	4"	PVC	Sch 40
Blank Casings (No. Used)					
Tail Piece					
Gravel Pack	86	105	8	#1 Sand	
Grout	0 0	70 86		Neat Cement Bentonite	2000 lbs. 200 lbs.

Grouting Method pressure tremie
Drilling Method mud Rotary

GEOLOGIC LOG

Note each depth where water was encountered in consolidated formations.

0-64 brown M-Sand
64-88 Clay
88-105 M-Sand

I certify that I have constructed the above referenced well in accordance with all well permit requirements and applicable State rules and regulations.

Drilling Company UNI TECH DRILLING
Well Driller (Print) Karl Hitzelberger
Driller's Signature Karl Hitzelberger
Registration No. M1530 Date 6/30/01

COPIES: White - DEP Canary - Driller Pink - Owner Goldenrod - Health Dept.

THIS FORM MUST BE COMPLETED BY THE PERMITTEE OR HIS/HER AGENT

GROUND WATER MONITORING WELL CERTIFICATION - FORM B - LOCATION CERTIFICATION

Name of Permittee: U.S. Environmental Protection Agency
Name of Facility: Puchack Well Field Superfund Site
Location: Pennsauken Township, New Jersey
NJPDES Number:

LAND SURVEYOR'S CERTIFICATION

Well Permit Number (As assigned by NJDEP's Bureau of Water Allocation): 31-58640-
This number must be permanently affixed to the well casing.
Datum: NAD 1983 Horizontal - NGVD 1929 Vertical
Longitude (one-tenth of a second): West 75° 03' 04.6"
Latitude (one-tenth of a second): North 39° 58' 36.7"

North 416965.0'
East 337638.8'

Elevation of Top of Casing (cap off) (one-hundredth of a foot): WC = 25.17' IC = 24.09' GR= 22.39'
Owners Well Number (As shown on application or plans): MW-17I

BENCHMARK - NGS Monument "D 100"
GEOGRAPHIC POSITION - North 39° 58' 25"
West 75° 03' 37"
DATE OF SURVEY - June, 2001

ELEVATION - 44.55'

AUTHENTICATION

I certify under penalty of law that I have personally examined and am familiar with the information submitted in this document and all attachments and that, based on my inquiry of those individuals immediately responsible for obtaining the information, I believe the submitted information is true, accurate and complete. I am aware that there are significant penalties for submitting false information including the possibility of fine and imprisonment.

Paul J Emilius Jr.

PROFESSIONAL LAND SURVEYOR'S SIGNATURE

Paul J. Emilius, Jr.
PROFESSIONAL LAND SURVEYOR'S NAME
(Please print or type)

SEAL

New Jersey P.L.S. License No. 37186
PROFESSIONAL LAND SURVEYOR'S LICENSE #

The Department reserves the right in cases of violation of permit specified ground water limits or Ground Water Qu Standards (N.J.A.C. 7:9-6.1 et seq.) to require that wells be resurveyed to an accuracy of one-hundredth of a second lat and longitude. This shall not be considered to be a major modification of the N.J.P.D.E.S. permit.

formb.doc

CDM Federal Programs Corporation

Double-Cased Monitoring Well

Client: U.S. Environmental Protection Agency
Site Name: Puchack Well Field (3220-002)
Project Location: Pennsauken, New Jersey
Drilling Contractor: Uni-Tech Drilling Co.
Drill Rig: Failing CF1500
Drilling Method: Mud Rotary

Well No.: MW-18D
Location: Betsy Ross Bridge
Drilling Date(s): 10/30 11/3
Initial Water Level (ft. bgs):
Geologist: L. Campbell
North: East: Elevation (ft.amsl):
Depth to Bottom (ft. bgs): ~~180~~ 155'

Annular Space Details

Type of Surface Seal:
Type of Annular Grout: Portland Type II cement/bentonite
Type of Seal: Filter Pro #00 Sand
Type of Filter Pack: Filter Pro #1 Sand
Type of Backfill: Filter Pro #1 Sand

Well Construction Materials

	Diameter	Type of Material
Screen	4"	Sch 40 PVC
Riser Casing	4"	Sch 40 PVC
Flush Mount Type		

Measurements

Outer Casing Depth (ft. bgs)	95'
Riser pipe length (ft)	140'
Screen length (ft)	10'
Screen slot size (in)	0.010
Depth to water (ft. bgs)	
Depth to bedrock (ft. bgs)	179'

Designed by:
Affiliation:
REMARKS:

R. Walker 11/2/00

NOT TO SCALE

Depths - (feet below ground surface)

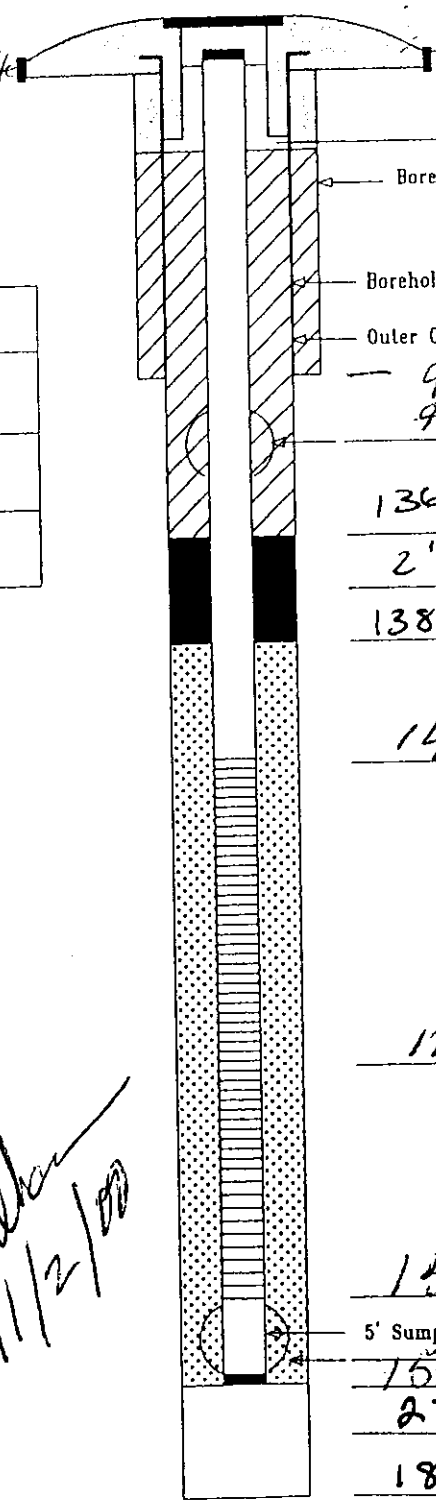

GROUND SURFACE
Sand
Borehole Diameter (in.)= 12
Borehole Diameter (in.) = 8
Outer Casing Type = 8" Steel
95' Geo. Log
~~97 Driller~~
Centralizer
136 Top of Seal
2' Total Seal Interval
138 Top of Sand
140 Top of Screen
10' Total Screen Interval
150' Bottom of Screen
5' Sump
Centralizer
155 Bottom of Well
27' Backfill Interval
182 Bottom of Borehole

DOUBLE-FORM PUCHACK.GPJ FEDERAL.GDT 6/28/00

DWR-138 M
11/96

New Jersey Department of Environmental Protection
Bureau of Water Allocation

MONITORING WELL RECORD

Well Permit No. 31 - 53203

Atlas Sheet Coordinates 31 02 257

OWNER IDENTIFICATION - Owner DELAWARE RIVER PORT AUTHO
Address 1 BETSY ROSS BRIDGE PLAZA
City PENNSAUKEN State NJ Zip Code

WELL LOCATION - If not the same as owner please give address. Owner's Well No. MW 18D
County CAMDEN Municipality PENNSAUKEN TWP Lot No. N/A Block No. N/A
Address LENOX ROAD

DATE WELL STARTED 10 13 1010
DATE WELL COMPETED 11 13 100

TYPE OF WELL (as per Well Permit Categories) MONITORING
Regulatory Program Requiring Well Case I.D.#

CONSULTING FIRM/FIELD SUPERVISOR (if applicable) CDM Federal Programs Tele. # 212-785-9123

WELL CONSTRUCTION

Total depth drilled 182 ft.
Well finished to 155 ft.

Borehole diameter:
Top 12 in.
Bottom 8 in.

Well was finished: ☐ above grade ☒ flush mounted

If finished above grade, casing height (stick up) above land surface ____ ft.

Was steel protective casing installed? ☒ Yes ☐ No

Static water level after drilling 22.58 ft.

Water level was measured using N Scope

Well was developed for 4 hours at 25 gpm

Method of development Submersible

Was permanent pumping equipment installed? ☐ Yes ☒ No

Pump capacity NA gpm

Pump type: NA

Drilling Fluid Bentonite Type of Rig Failing 1500

Health and Safety Plan submitted? ☒ Yes ☐ No

Level of Protection used on site (circle one) None (D) C B A

Note: Measure all depths from land surface	Depth to Top (ft.)	Depth to Bottom (ft.)	Diameter (inches)	Material	Wgt./Rating (lbs/sch no.)
Single/Inner Casing	0	140	4"	PVC	Sch 40
Middle Casing (for triple cased wells only)					
Outer Casing (largest diameter)	0	95	8"	Steel	Sch 40
Open Hole or Screen (No. Used .010)	140	150	4"	PVC	Sch 40
Blank Casings (No. Used)					
Tail Piece					
Gravel Pack	136	182		#1 Morie	
Grout	0 0	95 136		Neat Cement Bentonite	800 lbs. 200 lbs.

Grouting Method Pressure Tremie
Drilling Method mud Rotary

I certify that I have constructed the above referenced well in accordance with all well permit requirements and applicable State rules and regulations.

Drilling Company UNI-TECH DRILLING
Well Driller (Print) Karl Hutzelberger
Driller's Signature Karl Hutzelberger
Registration No. 11530 Date 7/6/01

GEOLOGIC LOG

Note each depth where water was encountered in consolidated formations.

0-88 Sand and clay, lignite
88-124 Light gray sand w/ gravels
124-164 gravel and cobbles
164-176 weathered bedrock
176-182 bedrock

COPIES: White - DEP Canary - Driller Pink - Owner Goldenrod - Health Dept.

THIS FORM MUST BE COMPLETED BY THE PERMITTEE OR HIS/HER AGENT

GROUND WATER MONITORING WELL CERTIFICATION - FORM B - LOCATION CERTIFICATION

Name of Permittee: U.S. Environmental Protection Agency
Name of Facility: Puchack Well Field Superfund Site
Location: Pennsauken Township, New Jersey
NJPDES Number:

LAND SURVEYOR'S CERTIFICATION

Well Permit Number (As assigned by NJDEP's Bureau of Water Allocation): 31-59203-
This number must be permanently affixed to the well casing.
Datum: NAD 1983 Horizontal - NGVD 1929 Vertical
Longitude (one-tenth of a second): West 75° 03' 16.1"
Latitude (one-tenth of a second): North 39° 58' 49.4"

North 418254.8'
East 336753.5'

Elevation of Top of Casing (cap off) (one-hundredth of a foot): WC = 9.97' IC = 9.68' GR= 10.00'
Owners Well Number (As shown on application or plans): MW-18D

BENCHMARK - NGS Monument "D 100"
GEOGRAPHIC POSITION - North 39° 58' 25"
West 75° 03' 37"
DATE OF SURVEY - June, 2001

ELEVATION - 44.55'

AUTHENTICATION

I certify under penalty of law that I have personally examined and am familiar with the information submitted in this document and all attachments and that, based on my inquiry of those individuals immediately responsible for obtaining the information, I believe the submitted information is true, accurate and complete. I am aware that there are significant penalties for submitting false information including the possibility of fine and imprisonment.

Paul J Emilius Jr.

PROFESSIONAL LAND SURVEYOR'S SIGNATURE

Paul J. Emilius, Jr.
PROFESSIONAL LAND SURVEYOR'S NAME
(Please print or type)

SEAL

New Jersey P.L.S. License No. 37186
PROFESSIONAL LAND SURVEYOR'S LICENSE #

The Department reserves the right in cases of violation of permit specified ground water limits or Ground Water Qu[illegible] Standards (N.J.A.C. 7:9-6.1 et seq.) to require that wells be resurveyed to an accuracy of one-hundredth of a second lat. and longitude. This shall not be considered to be a major modification of the N.J.P.D.E.S. permit.

formb.doc

CDM Federal Programs Corporation

Double-Cased Monitoring Well

Client: U.S. Environmental Protection Agency
Site Name: Puchack Well Field (3220-002)
Project Location: Pennsauken, New Jersey
Drilling Contractor: Uni-Tech Drilling Co.
Drill Rig: FAILING 1500
Drilling Method: Mud Rotary

Well No.: MW 19D
Location:
Drilling Date(s): 10/6/00 10/11/00
Initial Water Level (ft. bgs):
Geologist: M. AKBAR
North: East: Elevation (ft.amsl):
Depth to Bottom (ft. bgs): ~~185~~ 163'

Annular Space Details

Type of Surface Seal: ~~Portland Type~~
Type of Annular Grout: CEMENT/BENTONITE
Type of Seal: Filter Pro NO. 00 SAND
Type of Filter Pack: Filter Pro NO. 1 SAND
Type of Backfill: Filter Pro NO. 1 SAND

Well Construction Materials

	Diameter	Type of Material
Screen	4"	PVC SCH 40
Riser Casing	4"	PVC SCH 40
Flush Mount Type		

Measurements

Outer Casing Depth (ft. bgs)	129
Riser pipe length (ft)	148
Screen length (ft)	10
Screen slot size (in)	0.010
Depth to water (ft. bgs)	
Depth to bedrock (ft. bgs)	185

Designed by: DICK WALKER
Affiliation: USGS
REMARKS: R.L. Walker 10/11/00

NOT TO SCALE

Depths - (feet below ground surface)

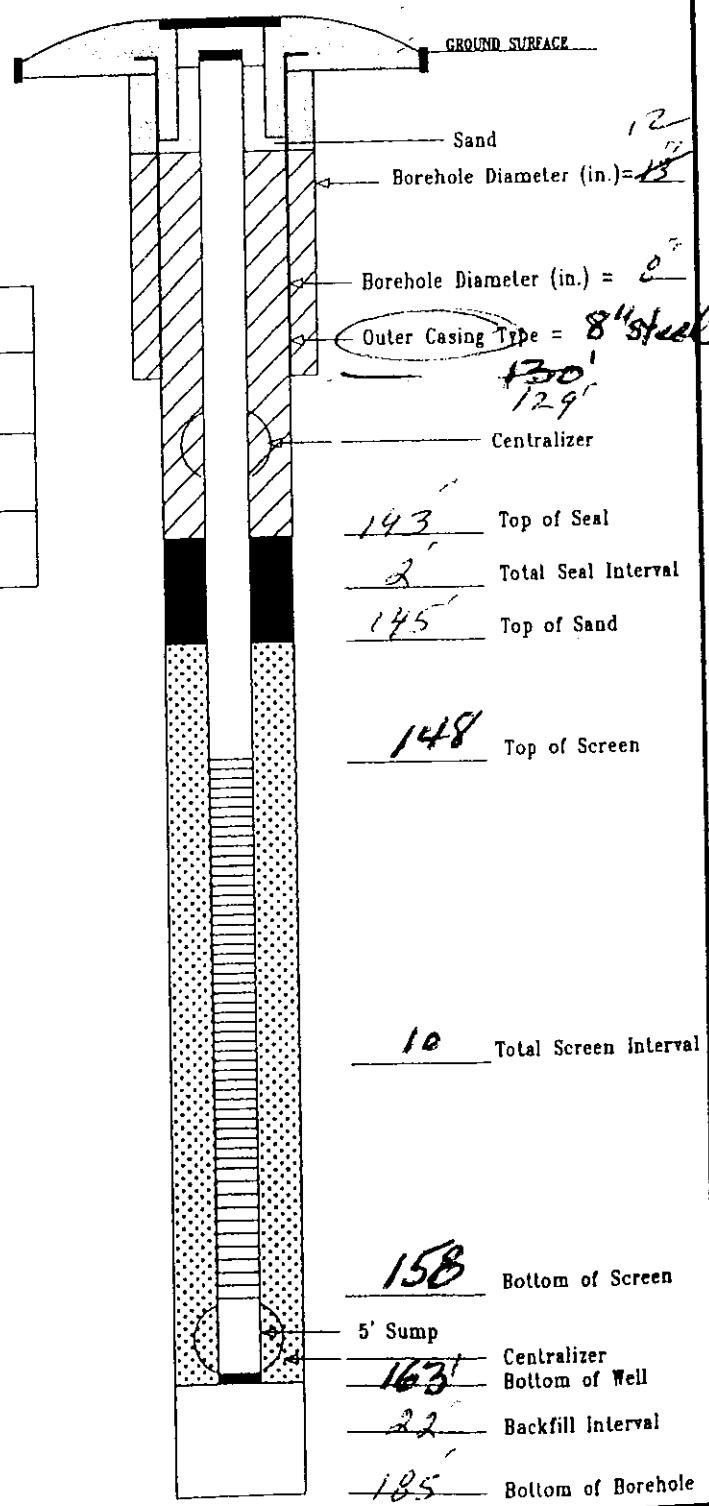

DOUBLE-FORM PUCHACK.CPI FEDERAL.CFT 6/28/00

DWR-138 M
11/98

New Jersey Department of Environmental Protection
Bureau of Water Allocation

MONITORING WELL RECORD

Well Permit No. 31 - 58626

Atlas Sheet Coordinates 31 02 258

OWNER IDENTIFICATION - Owner PENNSAUKEN TOWNSHIP
Address 5605 CRESCENT BLVD.
City PENNSAUKEN State N.J Zip Code

WELL LOCATION - If not the same as owner please give address. Owner's Well No. MW 19 D
County CAMDEN Municipality PENNSAUKEN TWP Lot No. 3 Block No. 1608
Address BARRONS ROAD

DATE WELL STARTED 10 16 00
DATE WELL COMPLETED 10 17 00

TYPE OF WELL (as per Well Permit Categories) MONITORING
Regulatory Program Requiring Well Case I.D.#

CONSULTING FIRM/FIELD SUPERVISOR (if applicable) CDM Federal Programs Tele. # 212-785-9123

WELL CONSTRUCTION

Total depth drilled 185 ft.
Well finished to 163 ft.

Borehole diameter:
Top 12 in.
Bottom 8 in.

Well was finished: ☐ above grade ☒ flush mounted

If finished above grade, casing height (stick up) above land surface ____ ft.

Was steel protective casing installed? ☒ Yes ☐ No

Static water level after drilling 38 1/6 ft.

Water level was measured using M-Scope

Well was developed for 4 hours at 35 gpm

Method of development Submersible

Was permanent pumping equipment installed? ☐ Yes ☒ No

Pump capacity NA gpm

Pump type: NA

Drilling Fluid Bentonite Type of Rig Failing 1500

Health and Safety Plan submitted? ☒ Yes ☐ No

Level of Protection used on site (circle one) None (D) C B A

Note: Measure all depths from land surface	Depth to Top (ft.)	Depth to Bottom (ft.)	Diameter (inches)	Material	Wgt./Rating (lbs/sch no.)
Single/Inner Casing	0	148	4"	PVC	Sch 40
Middle Casing (for triple cased wells only)					
Outer Casing (largest diameter)	0	129	8"	Steel	Sch 40
Open Hole or Screen (No. Used .010)	148	158	4"	PVC	Sch 40
Blank Casings (No. Used)					
Tail Piece					
Gravel Pack	143	185		#1 Morie	
Grout	0 0	129 143		Neat Cement Bentonite	11,700 lbs. 230 lbs.

Grouting Method Pressure, Tremie
Drilling Method mud Rotary

I certify that I have constructed the above referenced well in accordance with all well permit requirements and applicable State rules and regulations.

Drilling Company UNI-TECH DRILLING
Well Driller (Print) Karl Hitzelberger
Driller's Signature Karl Hitzelberger
Registration No. M1530 Date 6/6/01

GEOLOGIC LOG

Note each depth where water was encountered in consolidated formations.

0-40 m-F sand
40-136 Clay and sand some silt
136-163 Light gray sand
163-168 silt and clay
168-185 decomposed rock

COPIES: White - DEP Canary - Driller Pink - Owner Goldenrod - Health Dept.

THIS FORM MUST BE COMPLETED BY THE PERMITTEE OR HIS/HER AGENT

GROUND WATER MONITORING WELL CERTIFICATION - FORM B - LOCATION CERTIFICATION

Name of Permittee: U.S. Environmental Protection Agency
Name of Facility: Puchack Well Field Superfund Site
Location: Pennsauken Township, New Jersey
NJPDES Number:

LAND SURVEYOR'S CERTIFICATION

Well Permit Number (As assigned by NJDEP's Bureau of Water Allocation): 31-58626-
This number must be permanently affixed to the well casing.
Datum: NAD 1983 Horizontal - NGVD 1929 Vertical
Longitude (one-tenth of a second): West 75° 02' 59.0"
Latitude (one-tenth of a second): North 39° 58' 58.2"

North 419133.2'
East 338089.3'

Elevation of Top of Casing (cap off) (one-hundredth of a foot): WC = 25.59' IC = 25.27' GR= 25.58'
Owners Well Number (As shown on application or plans): MW-19D

BENCHMARK - NGS Monument "D 100"
GEOGRAPHIC POSITION - North 39° 58' 25"
West 75° 03' 37"
DATE OF SURVEY - June, 2001

ELEVATION - 44.55'

AUTHENTICATION

I certify under penalty of law that I have personally examined and am familiar with the information submitted in this document and all attachments and that, based on my inquiry of those individuals immediately responsible for obtaining the information, I believe the submitted information is true, accurate and complete. I am aware that there are significant penalties for submitting false information including the possibility of fine and imprisonment.

Paul J Emilius Jr.

PROFESSIONAL LAND SURVEYOR'S SIGNATURE

Paul J. Emilius, Jr.
PROFESSIONAL LAND SURVEYOR'S NAME
(Please print or type)

SEAL

New Jersey P.L.S. License No. 37186
PROFESSIONAL LAND SURVEYOR'S LICENSE #

The Department reserves the right in cases of violation of permit specified ground water limits or Ground Water Qu Standards (N.J.A.C. 7:9-6.1 et seq.) to require that wells be resurveyed to an accuracy of one-hundredth of a second lati. and longitude. This shall not be considered to be a major modification of the N.J.P.D.E.S. permit.

formb.doc

CDM Federal Programs Corporation

Double-Cased Monitoring Well

Client: U.S. Environmental Protection Agency
Site Name: Puchack Well Field (3220-002)
Project Location: Pennsauken, New Jersey
Drilling Contractor: Uni-Tech Drilling Co.
Drill Rig: HR FAILING 1500
Drilling Method: Mud Rotary

Well No.: MW 19 I
Location: Hedman & BARRONS
Drilling Date(s): 10/13-16/00
Initial Water Level (ft. bgs):
Geologist: M. Akbar
North: East: Elevation (ft.amsl):
Depth to Bottom (ft. bgs): ~~95~~ 92

Annular Space Details

Type of Surface Seal:
Type of Annular Grout: Portland Type CEMENT/BENTONITE
Type of Seal: Gilkerpo NO. 00 SAND
Type of Filter Pack: Gilkerpo NO. 1 SAND
Type of Backfill: Gilkerpo NO. 1 SAND

Well Construction Materials

	Diameter	Type of Material
Screen	4"	PVC SCH 40
Riser Casing	4"	PVC SCH 40
Flush Mount Type		

Measurements

Outer Casing Depth (ft. bgs)	77
Riser pipe length (ft)	82
Screen length (ft)	10
Screen slot size (in)	0.010
Depth to water (ft. bgs)	
Depth to bedrock (ft. bgs)	

Designed by: DICK WALKER
Affiliation: USGS
REMARKS:

RHWalker 10/11/00

NOT TO SCALE

Depths - (feet below ground surface)

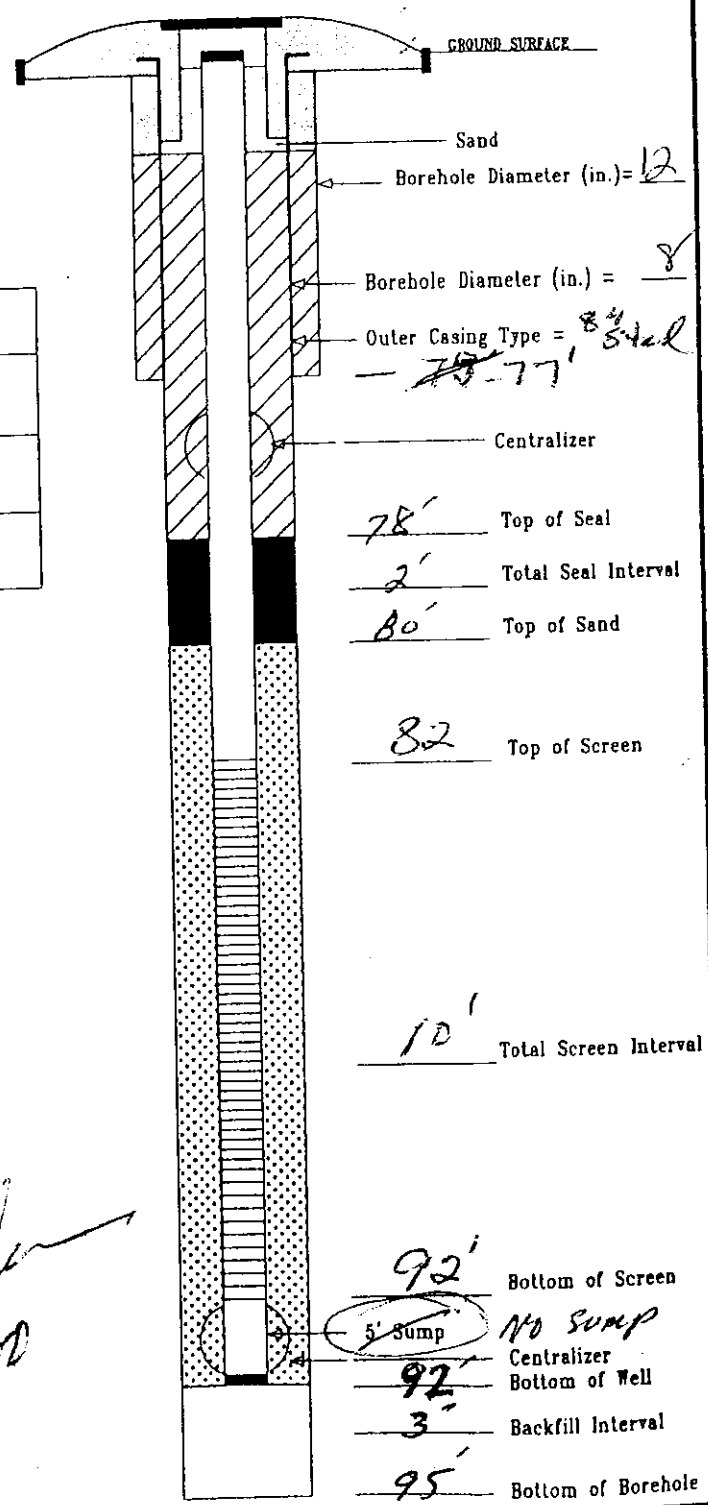

DOUBLE-FORM PUCHACK.GPJ FEDERAL.GDT 6/28/00

DWR-138 M
11/98

New Jersey Department of Environmental Protection
Bureau of Water Allocation

MONITORING WELL RECORD

Well Permit No. 31 : 58627

Atlas Sheet Coordinates 31 : 07 258

OWNER IDENTIFICATION - Owner PENNSAUKEN TOWNSHIP
Address 5605 CRESCENT BLVD.
City PENNSAUKEN State NJ Zip Code

WELL LOCATION - If not the same as owner please give address. Owner's Well No. MW 19 I
County CAMDEN Municipality PENNSAUKEN TWP Lot No. 3 Block No. 1608
Address BARROWS ROAD

DATE WELL STARTED 10/13/00
DATE WELL COMPLETED 10/16/00

TYPE OF WELL (as per Well Permit Categories) MONITORING
Regulatory Program Requiring Well Case I.D.#

CONSULTING FIRM/FIELD SUPERVISOR (if applicable) CDM Federal Programs Tele. #212.785.9123

WELL CONSTRUCTION

Total depth drilled 95 ft.
Well finished to 92 ft.

Borehole diameter:
Top 12 in.
Bottom 8 in.

Well was finished: ☐ above grade
☒ flush mounted

If finished above grade, casing height (stick up) above land surface ____ ft.

Was steel protective casing installed?
☒ Yes ☐ No

Static water level after drilling 37.56 ft.

Water level was measured using M Scope

Well was developed for 4 hours
at 25 gpm

Method of development AIR LIFT

Was permanent pumping equipment installed? ☐ Yes ☒ No

Pump capacity NA gpm

Pump type:

Drilling Fluid Bentonite Type of Rig 1500 Failing

Health and Safety Plan submitted? ☒ Yes ☐ No

Level of Protection used on site (circle one) None D C B A

Note: Measure all depths from land surface	Depth to Top (ft.)	Depth to Bottom (ft.)	Diameter (inches)	Material	Wgt./Rating (lbs/sch no.)
Single/Inner Casing	0	82	4"	PVC	Sch 40
Middle Casing (for triple cased wells only)					
Outer Casing (largest diameter)	0	77	8"	Steel	Sch 40
Open Hole or Screen (No. Used 010)	82	92	4"	PVC	Sch 40
Blank Casings (No. Used)					
Tail Piece					
Gravel Pack	78	95	8	#1 Sand	
Grout	0 0	77 78		Neat Cement Bentonite	2000 lbs. 152 lbs.

Grouting Method Pressure Tremie
Drilling Method Mud Rotary

GEOLOGIC LOG

Note each depth where water was encountered in consolidated formations.

0-15 yellow sand
15-20 clay white
20-95 sand w/ clay lenses

I certify that I have constructed the above referenced well in accordance with all well permit requirements and applicable State rules and regulations.

Drilling Company UNI-TECH DRILLING
Well Driller (Print) Karl Hitzelberger
Driller's Signature Karl Hitzelberger
Registration No. M1330 Date 6/30/01

COPIES: White - DEP Canary - Driller Pink - Owner Goldenrod - Health Dept.

THIS FORM MUST BE COMPLETED BY THE PERMITTEE OR HIS/HER AGENT

GROUND WATER MONITORING WELL CERTIFICATION - FORM B - LOCATION CERTIFICATION

Name of Permittee: U.S. Environmental Protection Agency
Name of Facility: Puchack Well Field Superfund Site
Location: Pennsauken Township, New Jersey
NJPDES Number:

LAND SURVEYOR'S CERTIFICATION

Well Permit Number (As assigned by NJDEP's Bureau of Water Allocation): 31-58627-
This number must be permanently affixed to the well casing.
Datum: NAD 1983 Horizontal - NGVD 1929 Vertical
Longitude (one-tenth of a second): West 75° 02' 59.1"
Latitude (one-tenth of a second): North 39° 58' 58.2"

North 419139.4'
East 338082.3'

Elevation of Top of Casing (cap off) (one-hundredth of a foot): WC = 25.47' IC = 25.10' GR= 25.51'
Owners Well Number (As shown on application or plans): MW-19I

BENCHMARK - NGS Monument "D 100"
GEOGRAPHIC POSITION - North 39° 58' 25"
West 75° 03' 37"
DATE OF SURVEY - June, 2001

ELEVATION - 44.55'

AUTHENTICATION

I certify under penalty of law that I have personally examined and am familiar with the information submitted in this document and all attachments and that, based on my inquiry of those individuals immediately responsible for obtaining the information, I believe the submitted information is true, accurate and complete. I am aware that there are significant penalties for submitting false information including the possibility of fine and imprisonment.

Paul J Emilius Jr.

PROFESSIONAL LAND SURVEYOR'S SIGNATURE

Paul J. Emilius, Jr.
PROFESSIONAL LAND SURVEYOR'S NAME
(Please print or type)

SEAL

New Jersey P.L.S. License No. 37186
PROFESSIONAL LAND SURVEYOR'S LICENSE #

The Department reserves the right in cases of violation of permit specified ground water limits or Ground Water Qu Standards (N.J.A.C. 7:9-6.1 et seq.) to require that wells be resurveyed to an accuracy of one-hundredth of a second lat. and longitude. This shall not be considered to be a major modification of the N.J.P.D.E.S. permit.

formb.doc

CDM Federal Programs Corporation

Client: U.S. Environmental Protection Agency
Site Name: Puchack Well Field (3220-002)
Project Location: Pennsauken, New Jersey
Drilling Contractor: Uni-Tech Drilling Co.
Drill Rig: FAILING 1500
Drilling Method: Mud Rotary

Single ~~Double~~-Cased Monitoring Well

Well No.: MW-19M
Location:
Drilling Date(s): 10/17/00
Initial Water Level (ft. bgs):
Geologist: M. Akbar
North: East: Elevation (ft.amsl):
Depth to Bottom (ft. bgs): ~~76'~~ 73'

Annular Space Details

Type of Surface Seal:
Type of Annular Grout: Portland Type II CEMENT/BENTONITE
Type of Seal: GilkiPro NO. 00 SAND
Type of Filter Pack: GilkiPro NO. 1 SAND
Type of Backfill: GilkiPro NO. 1 SAND

Well Construction Materials

	Diameter	Type of Material
Screen	4"	PVC SCH 40
Riser Casing	4"	PVC SCH 40
Flush Mount Type		

Measurements

Outer Casing Depth (ft. bgs)	NONE
Riser pipe length (ft)	63
Screen length (ft)	10
Screen slot size (in)	0.010
Depth to water (ft. bgs)	
Depth to bedrock (ft. bgs)	

Designed by: Dick Walker
Affiliation: USGS
REMARKS: [signature] 10/16/00

NOT TO SCALE

Depths - (feet below ground surface)

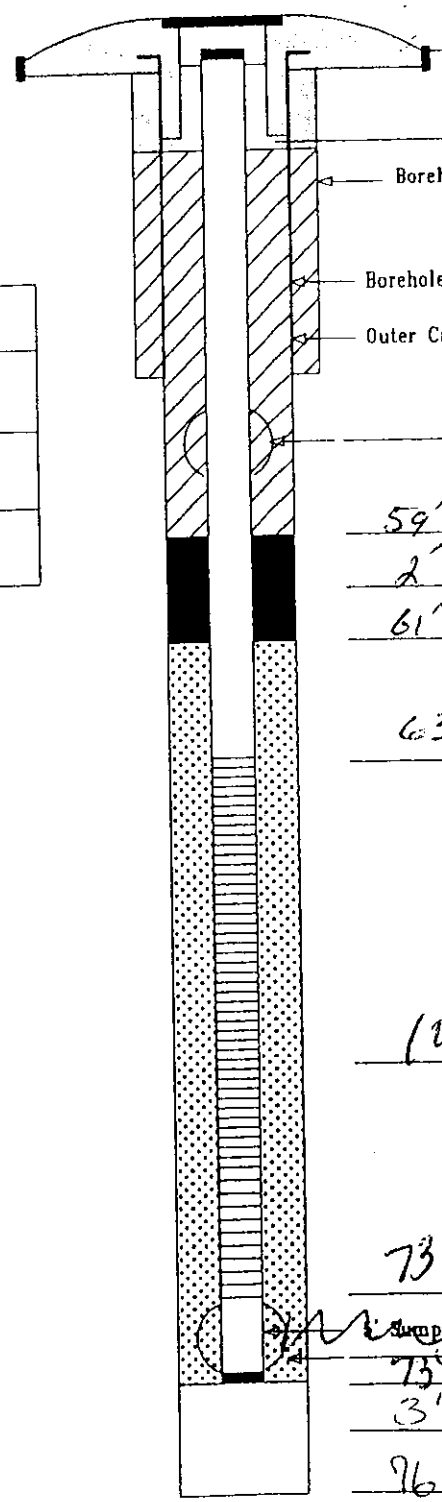

DOUBLE-FORM PUCHACK.GPJ FEDERAL.GDT 6/28/00

DWR-138 M
11/98

New Jersey Department of Environmental Protection
Bureau of Water Allocation

MONITORING WELL RECORD

Well Permit No. 31 - 58628

Atlas Sheet Coordinates 31 : 02 : 259

OWNER IDENTIFICATION - Owner PENNSAUKEN TOWNSHIP
Address 5605 CRESCENT BLVD.
City PENNSAUKEN State NJ Zip Code

WELL LOCATION - If not the same as owner please give address. Owner's Well No. MW19M
County CAMDEN Municipality PENNSAUKEN TWP Lot No. 3 Block No. 1608
Address BARROWS ROAD

DATE WELL STARTED 10/17/00
DATE WELL COMPLETED 10/17/00

TYPE OF WELL (as per Well Permit Categories) MONITORING
Regulatory Program Requiring Well Case I.D.#

CONSULTING FIRM/FIELD SUPERVISOR (if applicable) CDM Federal Programs Tele. #212.785.9123

WELL CONSTRUCTION

Total depth drilled 76 ft.
Well finished to 73 ft.

Borehole diameter:
Top 8 in.
Bottom 8 in.

Well was finished: ☐ above grade ☒ flush mounted

If finished above grade, casing height (stick up) above land surface ____ ft.

Was steel protective casing installed? ☒ Yes ☐ No

Static water level after drilling 37.5 ft.

Water level was measured using M Scope

Well was developed for 4 hours at 25 gpm

Method of development Airlift

Was permanent pumping equipment installed? ☐ Yes ☒ No

Pump capacity NA gpm

Pump type:

Drilling Fluid Bentonite Type of Rig 1500 failing

Health and Safety Plan submitted? ☒ Yes ☐ No

Level of Protection used on site (circle one) None D C B A

Note: Measure all depths from land surface	Depth to Top (ft.)	Depth to Bottom (ft.)	Diameter (inches)	Material	Wgt./Rating (lbs/sch no.)
Single/Inner Casing	0	63	4"	Pvc	Sch 40
Middle Casing (for triple cased wells only)					
Outer Casing (largest diameter)					
Open Hole or Screen (No. Used .010)	63	73	4"	Pvc	Sch 40
Blank Casings (No. Used)					
Tail Piece					
Gravel Pack	59	76		#1 Sand	
Grout	0	59		Neat Cement Bentonite	500 lbs. 50 lbs.

Grouting Method pressure Tremie
Drilling Method mud rotary

GEOLOGIC LOG

Note each depth where water was encountered in consolidated formations.

0-15 yellow sand
15-20' clay white
20-76' sand + clay lenses

I certify that I have constructed the above referenced well in accordance with all well permit requirements and applicable State rules and regulations.

Drilling Company UNI-TECH DRILLING

Well Driller (Print) Karl Hitzelberger

Driller's Signature Karl Hitzelberger

Registration No. M1530 Date 6/30/01

COPIES: White - DEP Canary - Driller Pink - Owner Goldenrod - Health Dept.

THIS FORM MUST BE COMPLETED BY THE PERMITTEE OR HIS/HER AGENT

GROUND WATER MONITORING WELL CERTIFICATION - FORM B - LOCATION CERTIFICATION

Name of Permittee: U.S. Environmental Protection Agency
Name of Facility: Puchack Well Field Superfund Site
Location: Pennsauken Township, New Jersey
NJPDES Number:

LAND SURVEYOR'S CERTIFICATION

Well Permit Number (As assigned by NJDEP's Bureau of Water Allocation): 31-58628-
This number must be permanently affixed to the well casing.
Datum: NAD 1983 Horizontal - NGVD 1929 Vertical
Longitude (one-tenth of a second): West 75° 02' 59.2"
Latitude (one-tenth of a second): North 39° 58' 58.3"

North 419146.3'
East 338074.1'

Elevation of Top of Casing (cap off) (one-hundredth of a foot): WC = 25.34' IC = 25.03' GR= 25.36'
Owners Well Number (As shown on application or plans): MW-19M

BENCHMARK - NGS Monument "D 100"
GEOGRAPHIC POSITION - North 39° 58' 25"
West 75° 03' 37"
DATE OF SURVEY - June, 2001

ELEVATION - 44.55'

AUTHENTICATION

I certify under penalty of law that I have personally examined and am familiar with the information submitted in this document and all attachments and that, based on my inquiry of those individuals immediately responsible for obtaining the information, I believe the submitted information is true, accurate and complete. I am aware that there are significant penalties for submitting false information including the possibility of fine and imprisonment.

Paul J Emilius Jr.

PROFESSIONAL LAND SURVEYOR'S SIGNATURE

Paul J. Emilius, Jr.
PROFESSIONAL LAND SURVEYOR'S NAME
(Please print or type)

SEAL

New Jersey P.L.S. License No. 37186
PROFESSIONAL LAND SURVEYOR'S LICENSE #

The Department reserves the right in cases of violation of permit specified ground water limits or Ground Water Qu Standards (N.J.A.C. 7:9-6.1 et seq.) to require that wells be resurveyed to an accuracy of one-hundredth of a second latitude and longitude. This shall not be considered to be a major modification of the N.J.P.D.E.S. permit.

formb.doc

CDM Federal Programs Corporation

Double-Cased Monitoring Well

Client: U.S. Environmental Protection Agency
Site Name: Puchack Well Field (3220-002)
Project Location: Pennsauken, New Jersey
Drilling Contractor: Uni-Tech Drilling Co.
Drill Rig: Failing 1500
Drilling Method: Mud Rotary

Well No.: MW-20 D
Location: Rt 90 Toll Plaza
Drilling Date(s): 11/27/00 - 11/30 12/1/00
Initial Water Level (ft. bgs):
Geologist: M. Akbar
North: East: Elevation (ft.amsl):
Depth to Bottom (ft. bgs): ~~190~~ 214 / 190

Annular Space Details

Type of Surface Seal:
Type of Annular Grout: CEMENT/BENTONITE
Type of Seal: NO. 00 SAND
Type of Filter Pack: NO. 1 SAND
Type of Backfill: NO. 1 SAND

Well Construction Materials

	Diameter	Type of Material
Screen	4"	SCH 40 PVC
Riser Casing	4"	SCH 40 PVC
Flush Mount Type		

Measurements

Outer Casing Depth (ft. bgs)	112
Riser pipe length (ft)	175
Screen length (ft)	10
Screen slot size (in)	0.010
Depth to water (ft. bgs)	
Depth to bedrock (ft. bgs)	

Designed by: DICK WALKER
Affiliation: USGS
REMARKS:

11/30/00

NOT TO SCALE

Depths - (feet below ground surface)

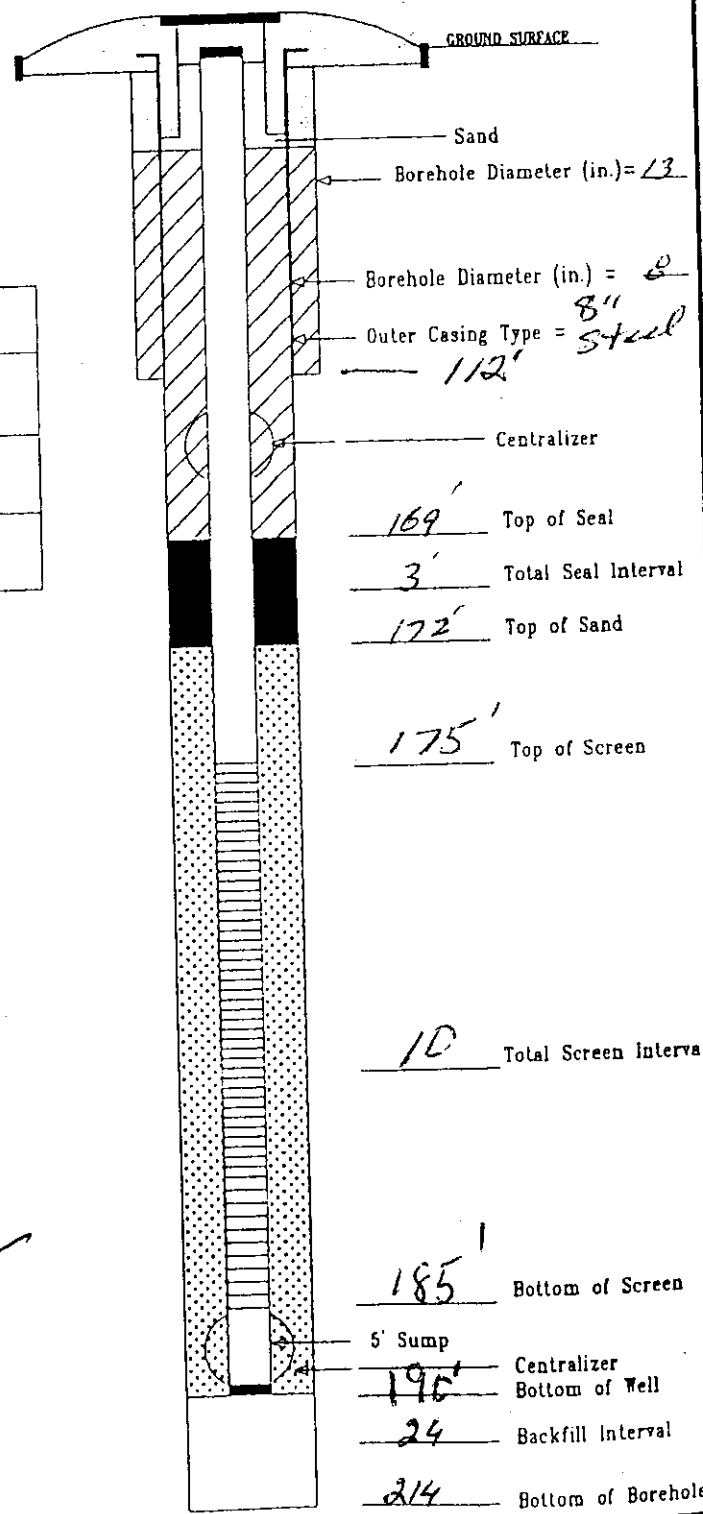

DOUBLE-FORM PUCHACK.GPJ FEDERAL.GDT 6/28/00

DWR-138 M
11/98

New Jersey Department of Environmental Protection
Bureau of Water Allocation

MONITORING WELL RECORD

Well Permit No. 31 - 59526

Atlas Sheet Coordinates 31 - 02 - 243

OWNER IDENTIFICATION - Owner DELAWARE RIVER PORT AUTHO
Address 1 BETSY ROSS BRIDGE PLAZA
City PENNSAUKEN State NJ Zip Code

WELL LOCATION - If not the same as owner please give address. Owner's Well No. MW 20D
County CAMDEN Municipality PENNSAUKEN TWP Lot No. N/A Block No. N/A
Address TOLL PLAZA ADMIN BUILDING

DATE WELL STARTED 11/27/00
DATE WELL COMPLETED 12/1/00

TYPE OF WELL (as per Well Permit Categories) MONITORING
Regulatory Program Requiring Well Case I.D.#

CONSULTING FIRM/FIELD SUPERVISOR (if applicable) CDM Federal Programs Tele. # 212-785-9123

WELL CONSTRUCTION

Total depth drilled 214 ft.
Well finished to 190 ft.

Borehole diameter:
Top 12 in.
Bottom 8 in.

Well was finished: ☐ above grade ☒ flush mounted

If finished above grade, casing height (stick up) above land surface ____ ft.

Was steel protective casing installed? ☒ Yes ☐ No

Static water level after drilling 31.64 ft.

Water level was measured using M-Scope

Well was developed for 4 hours at 25 gpm

Method of development Submersible

Was permanent pumping equipment installed? ☐ Yes ☒ No

Pump capacity NA gpm

Pump type: NA

Drilling Fluid Bentonite Type of Rig Failing 1500

Health and Safety Plan submitted? ☒ Yes ☐ No

Level of Protection used on site (circle one) None (D) C B A

I certify that I have constructed the above referenced well in accordance with all well permit requirements and applicable State rules and regulations.

Drilling Company UNI-TECH DRILLING

Well Driller (Print) Karl Hitzelberger

Driller's Signature Karl Hitzelberger

Registration No. M1530 Date 9/16/01

Note: Measure all depths from land surface	Depth to Top (ft.)	Depth to Bottom (ft.)	Diameter (inches)	Material	Wgt./Rating (lbs/sch no.)
Single/Inner Casing	0	175	4"	PVC	Sch 40
Middle Casing (for triple cased wells only)					
Outer Casing (largest diameter)	0	112	8"	Steel	Sch 40
Open Hole or Screen (No. Used 010)	175	185	4"	PVC	Sch 40
Blank Casings (No. Used)					
Tail Piece					
Gravel Pack	169	214		#1 Morie	
Grout	0 0	112 169		Neat Cement Bentonite	12000 lbs. 260 lbs.

Grouting Method Pressure Tremie
Drilling Method Mud Rotary

GEOLOGIC LOG

Note each depth where water was encountered in consolidated formations.

0-68 sand, trace silt and fine gravel
68-100 red clay
100-168 M-F sand w/ some clay
168-204 Light gray sand
204-214 decomposed rock

COPIES: White - DEP Canary - Driller Pink - Owner Goldenrod - Health Dept.

THIS FORM MUST BE COMPLETED BY THE PERMITTEE OR HIS/HER AGENT

GROUND WATER MONITORING WELL CERTIFICATION - FORM B - LOCATION CERTIFICATION

Name of Permittee: U.S. Environmental Protection Agency
Name of Facility: Puchack Well Field Superfund Site
Location: Pennsauken Township, New Jersey
NJPDES Number:

LAND SURVEYOR'S CERTIFICATION

Well Permit Number (As assigned by NJDEP's Bureau of Water Allocation): 31-59526-
This number must be permanently affixed to the well casing.
Datum: NAD 1983 Horizontal - NGVD 1929 Vertical
Longitude (one-tenth of a second): West 75° 02' 50.6"
Latitude (one-tenth of a second): North 39° 58' 39.2"

North 417213.6'
East 338729.3'

Elevation of Top of Casing (cap off) (one-hundredth of a foot): WC = 19.19' IC = 18.89' GR= 19.20'
Owners Well Number (As shown on application or plans): MW-20D

BENCHMARK - NGS Monument "D 100"
GEOGRAPHIC POSITION - North 39° 58' 25"
West 75° 03' 37"
DATE OF SURVEY - June, 2001

ELEVATION - 44.55'

AUTHENTICATION

I certify under penalty of law that I have personally examined and am familiar with the information submitted in this document and all attachments and that, based on my inquiry of those individuals immediately responsible for obtaining the information, I believe the submitted information is true, accurate and complete. I am aware that there are significant penalties for submitting false information including the possibility of fine and imprisonment.

Paul J Emilius Jr.

PROFESSIONAL LAND SURVEYOR'S SIGNATURE

Paul J. Emilius, Jr.
PROFESSIONAL LAND SURVEYOR'S NAME
(Please print or type)

SEAL

New Jersey P.L.S. License No. 37186
PROFESSIONAL LAND SURVEYOR'S LICENSE #

The Department reserves the right in cases of violation of permit specified ground water limits or Ground Water Qu Standards (N.J.A.C. 7:9-6.1 et seq.) to require that wells be resurveyed to an accuracy of one-hundredth of a second latitude and longitude. This shall not be considered to be a major modification of the N.J.P.D.E.S. permit.

formb.doc

Double-Cased Monitoring Well

CDM Federal Programs Corporation

Client: U.S. Environmental Protection Agency

Site Name: Puchack Well Field (3220-002)

Project Location: Pennsauken, New Jersey

Drilling Contractor: Uni-Tech Drilling Co.

Drill Rig: Failing CF 1500

Drilling Method: Mud rotary

Well No.: MW 20 I

Location: Rt 90 Toll Plaza

Drilling Date(s): 12/4 - 12/7/00

Initial Water Level (ft. bgs):

Geologist: A. Sec

North: East: Elevation (ft.amsl):

Depth to Bottom (ft. bgs): 94' 99' bgs

Depths - (feet below ground surface)

Annular Space Details

Type of Surface Seal:

Type of Annular Grout: Portland Cement/bentonite

Type of Seal: Filkrfo #00 Sand

Type of Filter Pack: Filkrfo #01 Sand

Type of Backfill: Filkrfo #01 Sand

Well Construction Materials

	Diameter	Type of Material
Screen	4"	Sch 40 PVC
Riser Casing	4"	Sch 40 PVC
Flush Mount Type		

Measurements

Outer Casing Depth (ft. bgs)	83'
Riser pipe length (ft)	89'
Screen length (ft)	5'
Screen slot size (in)	0.010"
Depth to water (ft. bgs)	
Depth to bedrock (ft. bgs)	

Designed by: Dick Walker

Affiliation: USGS

REMARKS:

R Walker 11/30/00

NOT TO SCALE

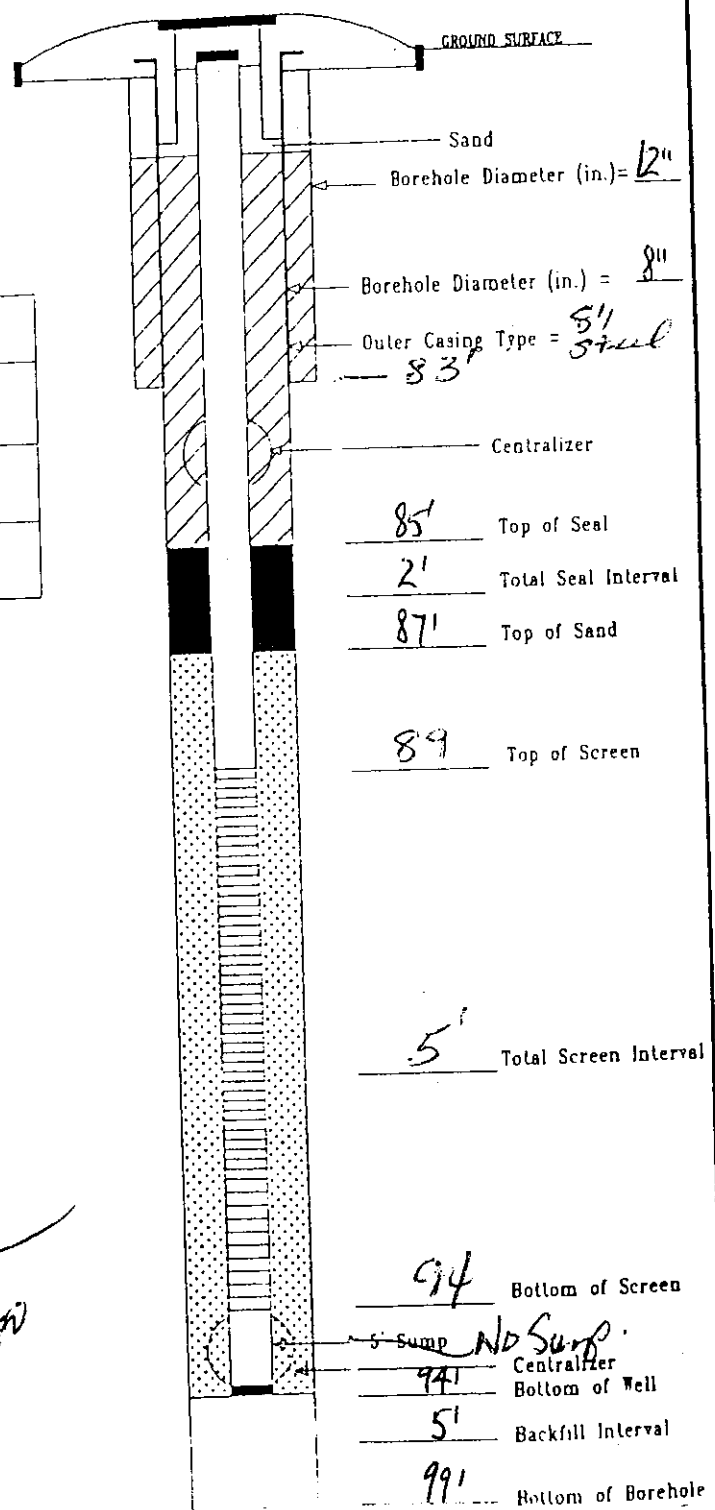

DOUBLE-FORM PUCHACK.CPI FEDERAL.CDT 6/28/00

DWR-138 M
11/98

New Jersey Department of Environmental Protection
Bureau of Water Allocation

MONITORING WELL RECORD

Well Permit No. 31 - 52527

Atlas Sheet Coordinates 31 - 02 - 243

OWNER IDENTIFICATION - Owner DELAWARE RIVER PORT AUTHO
Address 1 BETSY ROSS BRIDGE PLAZA
City PENNSAUKEN State NJ Zip Code

WELL LOCATION - If not the same as owner please give address. Owner's Well No. MW 20 ~~5~~ I
County CAMDEN Municipality PENNSAUKEN TWP Lot No. N/A Block No. N/A
Address TOLL PLAZA ADMIN BUILDING

DATE WELL STARTED 12/4/00
DATE WELL COMPLETED 12/7/00

TYPE OF WELL (as per Well Permit Categories) MONITORING
Regulatory Program Requiring Well Case I.D.#

CONSULTING FIRM/FIELD SUPERVISOR (if applicable) CDM Federal Programs Tele. # 212-785-9123

WELL CONSTRUCTION

Total depth drilled 99 ft.
Well finished to 94 ft.

Borehole diameter:
Top 12 in.
Bottom 8 in.

Well was finished: ☐ above grade ☒ flush mounted

If finished above grade, casing height (stick up) above land surface ____ ft.

Was steel protective casing installed? ☒ Yes ☐ No

Static water level after drilling 31.95 ft.

Water level was measured using M. Scope

Well was developed for 4 hours at 25 gpm

Method of development Airlift

Was permanent pumping equipment installed? ☐ Yes ☒ No

Pump capacity N/A gpm

Pump type:

Drilling Fluid Bentonite Type of Rig (5000) Failing

Health and Safety Plan submitted? ☒ Yes ☐ No

Level of Protection used on site (circle one) None D C B A

Note: Measure all depths from land surface	Depth to Top (ft.)	Depth to Bottom (ft.)	Diameter (inches)	Material	Wgt./Rating (lbs/sch no.)
Single/Inner Casing	0	89	4"	PVC	Sch 40
Middle Casing (for triple cased wells only)					
Outer Casing (largest diameter)	0	83	8"	Steel	Sch 40
Open Hole or Screen (No. Used 010)	89	94	4"	PVC	Sch 40
Blank Casings (No. Used)					
Tail Piece					
Gravel Pack	85	99		#1 Sand	
Grout	0 0	83 85		Neat Cement Bentonite	5000 lbs. 800 lbs.

Grouting Method pressure tremie
Drilling Method Mud Rotary

GEOLOGIC LOG

Note each depth where water was encountered in consolidated formations.

0-50 CMF sand w/ clay lenses
50-70 Clay
70-99 CMF sand w/ clay stringers

I certify that I have constructed the above referenced well in accordance with all well permit requirements and applicable State rules and regulations.

Drilling Company UNI-TECH DRILLING
Well Driller (Print) Earl Hitzelberger
Driller's Signature [signature]
Registration No. M1330 Date 6/1/2001

COPIES: White - DEP Canary - Driller Pink - Owner Goldenrod - Health Dept.

THIS FORM MUST BE COMPLETED BY THE PERMITTEE OR HIS/HER AGENT

GROUND WATER MONITORING WELL CERTIFICATION - FORM B - LOCATION CERTIFICATION

Name of Permittee: U.S. Environmental Protection Agency
Name of Facility: Puchack Well Field Superfund Site
Location: Pennsauken Township, New Jersey
NJPDES Number:

LAND SURVEYOR'S CERTIFICATION

Well Permit Number (As assigned by NJDEP's Bureau of Water Allocation): 31-59527-
This number must be permanently affixed to the well casing.
Datum: NAD 1983 Horizontal - NGVD 1929 Vertical
Longitude (one-tenth of a second): West 75° 02' 50.6"
Latitude (one-tenth of a second): North 39° 58' 39.4"

North 417226.9'
East 338732.5'

Elevation of Top of Casing (cap off) (one-hundredth of a foot): WC = 19.17' IC = 18.76' GR= 19.17'
Owners Well Number (As shown on application or plans): MW-20I

BENCHMARK - NGS Monument "D 100"
GEOGRAPHIC POSITION - North 39° 58' 25"
West 75° 03' 37"
DATE OF SURVEY - June, 2001

ELEVATION - 44.55'

AUTHENTICATION

I certify under penalty of law that I have personally examined and am familiar with the information submitted in this document and all attachments and that, based on my inquiry of those individuals immediately responsible for obtaining the information, I believe the submitted information is true, accurate and complete. I am aware that there are significant penalties for submitting false information including the possibility of fine and imprisonment.

Paul J Emilius Jr.

PROFESSIONAL LAND SURVEYOR'S SIGNATURE

Paul J. Emilius, Jr.
PROFESSIONAL LAND SURVEYOR'S NAME
(Please print or type)

SEAL

New Jersey P.L.S. License No. 37186
PROFESSIONAL LAND SURVEYOR'S LICENSE #

The Department reserves the right in cases of violation of permit specified ground water limits or Ground Water Qua. , Standards (N.J.A.C. 7:9-6.1 et seq.) to require that wells be resurveyed to an accuracy of one-hundredth of a second latitude and longitude. This shall not be considered to be a major modification of the N.J.P.D.E.S. permit.

formb.doc

CDM Federal Programs Corporation

Triple ~~Double~~-Cased Monitoring Well

Client: U.S. Environmental Protection Agency

Site Name: Puchack Well Field (3220-002)

Project Location: Pennsauken, New Jersey

Drilling Contractor: Uni-Tech Drilling Co.

Drill Rig: Failing CF1500

Drilling Method: Mud Rotary

Well No.: MW-21D

Location: Capital Hwy

Drilling Date(s): 9/21/00 - 10/19/00

Initial Water Level (ft. bgs):

Geologist: Lisa Campbell

North: East: Elevation (ft.amsl):

Depth to Bottom (ft. bgs): 201

Annular Space Details

Type of Surface Seal:

Type of Annular Grout: Portland type II cement/bentonite

Type of Seal: Filter Pro # 00 Sand

Type of Filter Pack: Filter Pro #1 Sand

Type of Backfill: Filter Pro #1 Sand

Well Construction Materials

	Diameter	Type of Material
Screen	4"	Sch. 40 PVC
Riser Casing	4"	Sch. 40 PVC
Flush Mount Type		

Measurements

Outer Casing Depth (ft. bgs)	12" - 68' 8" - 110
Riser pipe length (ft)	186
Screen length (ft)	10'
Screen slot size (in)	0.010
Depth to water (ft. bgs)	
Depth to bedrock (ft. bgs)	212'

Designed by:

Affiliation:

REMARKS:

RCWalker 10/19/00

NOT TO SCALE

Depths - (feet below ground surface)

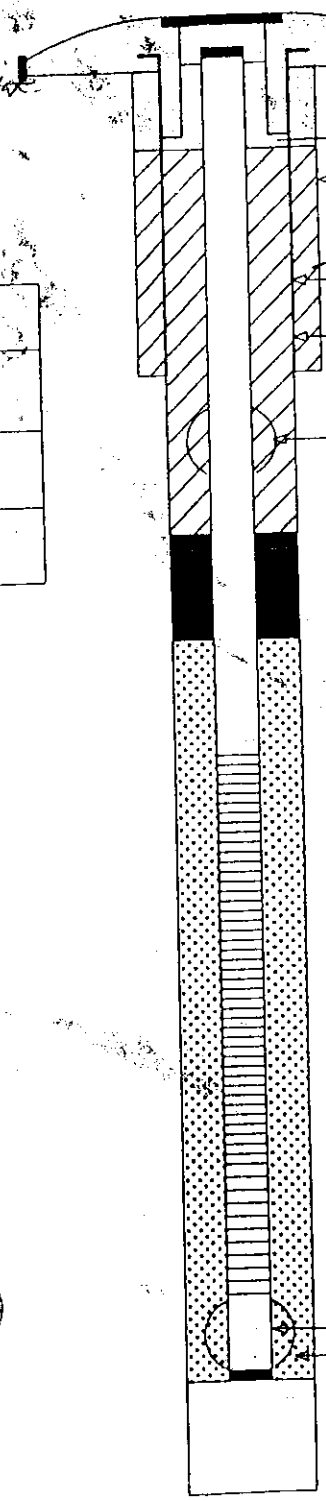

DOUBLE-FORM PUCHACK.GPJ FEDERAL.GDT 6/28/00

DWR-#38 M
11/98

New Jersey Department of Environmental Protection
Bureau of Water Allocation

MONITORING WELL RECORD

Well Permit No. 31 - 58633

Atlas Sheet Coordinates 31 : 02 267

OWNER IDENTIFICATION - Owner PENNSAUKEN TOWNSHIP
Address 5605 CRESCENT BLVD.
City PENNSAUKEN State NJ Zip Code

WELL LOCATION - If not the same as owner please give address. Owner's Well No. MW 21D
County CAMDEN Municipality PENNSAUKEN TWP Lot No. ? Block No. 2101
Address CAPITAL HIGHWAY

DATE WELL STARTED 9/21/00
DATE WELL COMPLETED 10/19/00

TYPE OF WELL (as per Well Permit Categories) MONITORING
Regulatory Program Requiring Well Case I.D.#

CONSULTING FIRM/FIELD SUPERVISOR (if applicable) ADD Federal Programs Tele. # 212-785-7133

WELL CONSTRUCTION

Total depth drilled 221 ft.
Well finished to 201 ft.

Borehole diameter:
Top 16 in.
Bottom in.

Well was finished: ☐ above grade ☒ flush mounted

If finished above grade, casing height (stick up) above land surface ft.

Was steel protective casing installed? ☒ Yes ☐ No

Static water level after drilling 33.97 ft.

Water level was measured using M-Scope

Well was developed for 4 hours at 85 gpm

Method of development Submersible

Was permanent pumping equipment installed? ☐ Yes ☒ No

Pump capacity NA gpm

Pump type: NA

Drilling Fluid Bentonite Type of Rig Failing 1500

Health and Safety Plan submitted? ☒ Yes ☐ No

Level of Protection used on site (circle one) None (D) C B A

Note: Measure all depths from land surface	Depth to Top (ft.)	Depth to Bottom (ft.)	Diameter (inches)	Material	Wgt./Rating (lbs/sch no.)
Single/Inner Casing	0	186	4"	PVC	Sch 40
Middle Casing (for triple cased wells only)	0	11110	8"	Steel	Sch 40
Outer Casing (largest diameter)	0	68	12"	Steel	Sch 40
Open Hole or Screen (No. Used .010)	186	196	4"	PVC	Sch 40
Blank Casings (No. Used)					
Tail Piece					
Gravel Pack	180	221		#1 Morie	
Grout	0 3	68 110 180		Neat Cement Bentonite	18000 lbs. 600 lbs.

Grouting Method Pressure Tremie
Drilling Method Mud Rotary

GEOLOGIC LOG

Note each depth where water was encountered in consolidated formations.

0-80 CMF sand w/ clay lenses
80-90 Clay
90-148 CMF sand w/ clay
148-152 Lt gray Clay
152-221 CMF sand w/ trace Clay

I certify that I have constructed the above referenced well in accordance with all well permit requirements and applicable State rules and regulations.

Drilling Company UNI-TECH DRILLING
Well Driller (Print) Karl Hitzelberger
Driller's Signature Karl Hitzelberger
Registration No. M1530 Date 7/6/01

COPIES: White - DEP Canary - Driller Pink - Owner Goldenrod - Health Dept.

THIS FORM MUST BE COMPLETED BY THE PERMITTEE OR HIS/HER AGENT

GROUND WATER MONITORING WELL CERTIFICATION - FORM B - LOCATION CERTIFICATION

Name of Permittee: U.S. Environmental Protection Agency
Name of Facility: Puchack Well Field Superfund Site
Location: Pennsauken Township, New Jersey
NJPDES Number:

LAND SURVEYOR'S CERTIFICATION

Well Permit Number (As assigned by NJDEP's Bureau of Water Allocation): 31-58633-
This number must be permanently affixed to the well casing.
Datum: NAD 1983 Horizontal - NGVD 1929 Vertical
Longitude (one-tenth of a second): West 75° 02' 42.4"
Latitude (one-tenth of a second): North 39° 58' 42.4"

North 417534.1'
East 339372.0'

Elevation of Top of Casing (cap off) (one-hundredth of a foot): WC = 20.77' IC = 20.42' GR= 20.78'
Owners Well Number (As shown on application or plans): MW-21D

BENCHMARK - NGS Monument "D 100" **ELEVATION** - 44.55'
GEOGRAPHIC POSITION - North 39° 58' 25"
West 75° 03' 37"
DATE OF SURVEY - June, 2001

AUTHENTICATION

I certify under penalty of law that I have personally examined and am familiar with the information submitted in this document and all attachments and that, based on my inquiry of those individuals immediately responsible for obtaining the information, I believe the submitted information is true, accurate and complete. I am aware that there are significant penalties for submitting false information including the possibility of fine and imprisonment.

Paul J Emilius Jr.

PROFESSIONAL LAND SURVEYOR'S SIGNATURE

Paul J. Emilius, Jr.
PROFESSIONAL LAND SURVEYOR'S NAME
(Please print or type)

SEAL

New Jersey P.L.S. License No. 37186
PROFESSIONAL LAND SURVEYOR'S LICENSE #

The Department reserves the right in cases of violation of permit specified ground water limits or Ground Water Qu Standards (N.J.A.C. 7:9-6.1 et seq.) to require that wells be resurveyed to an accuracy of one-hundredth of a second latitude and longitude. This shall not be considered to be a major modification of the N.J.P.D.E.S. permit.

formb.doc

CDM Federal Programs Corporation

Double-Cased Monitoring Well

Client: U.S. Environmental Protection Agency
Site Name: Puchack Well Field (3220-002)
Project Location: Pennsauken, New Jersey
Drilling Contractor: Uni-Tech Drilling Co.
Drill Rig: Failing CF1500
Drilling Method: Mud Rotary

Well No.: MW 21 I
Location: Capitol Ave
Drilling Date(s): 10/16/00 - 10/17/00
Initial Water Level (ft. bgs):
Geologist: L. Campbell
North: East: Elevation (ft.amsl):
Depth to Bottom (ft. bgs): 107

Annular Space Details

Type of Surface Seal:
Type of Annular Grout: Portland Type II Cement/Bentonite Grout
Type of Seal: Filter Pro #00 Sand
Type of Filter Pack: Filter Pro #1 Sand
Type of Backfill: Filter Pro #1 Sand

Well Construction Materials

	Diameter	Type of Material
Screen	4"	Sch 40 PVC
Riser Casing	4"	Sch 40 PVC
Flush Mount Type		

Measurements

Outer Casing Depth (ft. bgs)	85'
Riser pipe length (ft)	92'
Screen length (ft)	10'
Screen slot size (in)	0.010
Depth to water (ft. bgs)	
Depth to bedrock (ft. bgs)	

Designed by:
Affiliation:
REMARKS:

R. Walker 10/16/00

NOT TO SCALE

Depths - (feet below ground surface)

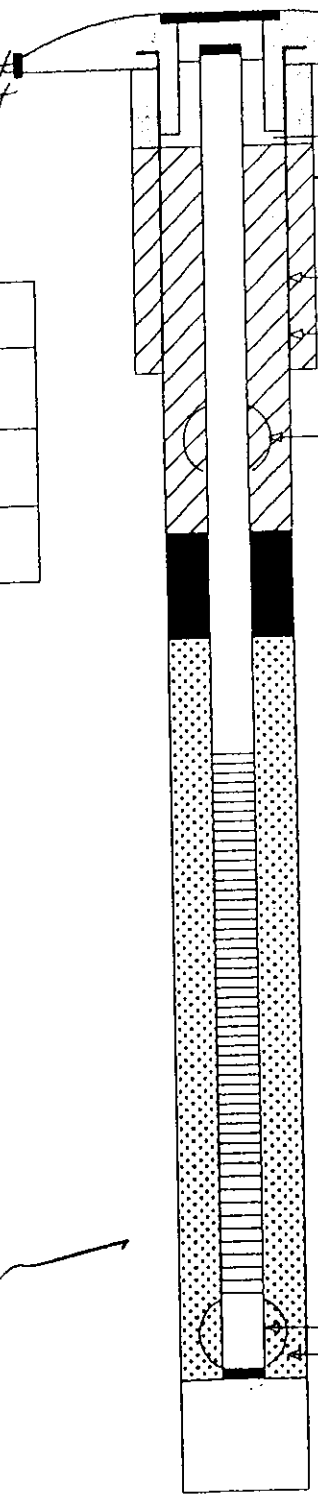

GROUND SURFACE
Sand
Borehole Diameter (in.) = 12
Borehole Diameter (in.) = 8
Outer Casing Type = 8" Steel
85'
Centralizer
88' Top of Seal
2' Total Seal Interval
90' Top of Sand
92' Top of Screen
10' Total Screen Interval
102' Bottom of Screen
5' Sump
Centralizer
107 Bottom of Well
1' Backfill Interval
108 Bottom of Borehole

DOUBLE-FORM PUCHACK.CPJ FEDERAL.CDT 6/28/00

DWR-138 M
11/98

New Jersey Department of Environmental Protection
Bureau of Water Allocation

MONITORING WELL RECORD

Well Permit No. 31 - 58634

Atlas Sheet Coordinates 31 : 02 267

OWNER IDENTIFICATION - Owner PENNSAUKEN TOWNSHIP
Address 5605 CRESCENT BLVD.
City PENNSAUKEN State NJ Zip Code

WELL LOCATION - If not the same as owner please give address: Owner's Well No. MW21 I
County CAMDEN Municipality PENNSAUKEN TWP Lot No. 9 Block No. 2101
Address CAPITAL HIGHWAY

DATE WELL STARTED 10/16/00
DATE WELL COMPLETED 10/17/00

TYPE OF WELL (as per Well Permit Categories) MONITORING
Regulatory Program Requiring Well Case I.D.#

CONSULTING FIRM/FIELD SUPERVISOR (if applicable) CDM Federal Programs Tele. #212-785-9123

WELL CONSTRUCTION

Total depth drilled 108 ft.
Well finished to 107 ft.

Borehole diameter:
Top 12 in.
Bottom 8 in.

Well was finished: ☐ above grade ☒ flush mounted

If finished above grade, casing height (stick up) above land surface ____ ft.

Was steel protective casing installed? ☒ Yes ☐ No

Static water level after drilling 33.40 ft.

Water level was measured using M-Scope

Well was developed for 4 hours at 25 gpm

Method of development Airlift

Was permanent pumping equipment installed? ☐ Yes ☒ No

Pump capacity NA gpm

Pump type:

Drilling Fluid Bentonite Type of Rig Soo Foring

Health and Safety Plan submitted? ☒ Yes ☐ No

Level of Protection used on site (circle one) None (D) C B A

Note: Measure all depths from land surface	Depth to Top (ft.)	Depth to Bottom (ft.)	Diameter (inches)	Material	Wgt./Rating (lbs/sch no.)
Single/Inner Casing	0	92	4"	PVC	Sch 40
Middle Casing (for triple cased wells only)					
Outer Casing (largest diameter)	0	85	8"	Steel	Sch 40
Open Hole or Screen (No. Used .010)	92	102	4"	PVC	Sch 40
Blank Casings (No. Used)					
Tail Piece					
Gravel Pack	88	108		#1 Sand	
Grout	0 0	85 88		Neat Cement Bentonite	5000 lbs. 500 lbs.

Grouting Method Pressure Tremie
Drilling Method Mud Rotary

GEOLOGIC LOG

Note each depth where water was encountered in consolidated formations.

0-15 yellow sand
15-50 clay white
50-108 MF sand

I certify that I have constructed the above referenced well in accordance with all well permit requirements and applicable State rules and regulations.

Drilling Company UNI-TECH DRILLING
Well Driller (Print) Karl Hitzelberger
Driller's Signature Karl Hitzelberger
Registration No. M1530 Date 6/30/01

COPIES: White - DEP Canary - Driller Pink - Owner Goldenrod - Health Dept.

THIS FORM MUST BE COMPLETED BY THE PERMITTEE OR HIS/HER AGENT

GROUND WATER MONITORING WELL CERTIFICATION - FORM B - LOCATION CERTIFICATION

Name of Permittee: U.S. Environmental Protection Agency
Name of Facility: Puchack Well Field Superfund Site
Location: Pennsauken Township, New Jersey
NJPDES Number:

LAND SURVEYOR'S CERTIFICATION

Well Permit Number (As assigned by NJDEP's Bureau of Water Allocation): 31-58634-
This number must be permanently affixed to the well casing.
Datum: NAD 1983 Horizontal - NGVD 1929 Vertical
Longitude (one-tenth of a second): West 75° 02' 42.5"
Latitude (one-tenth of a second): North 39° 58' 42.5"

North 417537.7'
East 339360.9'

Elevation of Top of Casing (cap off) (one-hundredth of a foot): WC = 20.55' IC = 20.20' GR= 20.56'
Owners Well Number (As shown on application or plans): MW-21I

BENCHMARK - NGS Monument "D 100"
GEOGRAPHIC POSITION - North 39° 58' 25"
West 75° 03' 37"
DATE OF SURVEY - June, 2001

ELEVATION - 44.55'

AUTHENTICATION

I certify under penalty of law that I have personally examined and am familiar with the information submitted in this document and all attachments and that, based on my inquiry of those individuals immediately responsible for obtaining the information, I believe the submitted information is true, accurate and complete. I am aware that there are significant penalties for submitting false information including the possibility of fine and imprisonment.

Paul J Emilius Jr.

PROFESSIONAL LAND SURVEYOR'S SIGNATURE

Paul J. Emilius, Jr.
PROFESSIONAL LAND SURVEYOR'S NAME
(Please print or type)

SEAL

New Jersey P.L.S. License No. 37186
PROFESSIONAL LAND SURVEYOR'S LICENSE #

The Department reserves the right in cases of violation of permit specified ground water limits or Ground Water Qu Standards (N.J.A.C. 7:9-6.1 et seq.) to require that wells be resurveyed to an accuracy of one-hundredth of a second lat and longitude. This shall not be considered to be a major modification of the N.J.P.D.E.S. permit.

formb.doc

Single

~~Double~~-Cased Monitoring Well

CDM Federal Programs Corporation

Client:	U.S. Environmental Protection Agency	Well No.:	MW21-M
Site Name:	Puchack Well Field (3220-002)	Location:	Capital Hym
Project Location:	Pennsauken, New Jersey	Drilling Date(s):	10/20/00
Drilling Contractor:	Uni-Tech Drilling Co.	Initial Water Level (ft. bgs):	
Drill Rig:	Failing CF1500	Geologist:	L. Campbell
Drilling Method:	Mud rotary	North: East: Elevation (ft.amsl):	
		Depth to Bottom (ft. bgs):	60

Annular Space Details

Type of Surface Seal:

Type of Annular Grout: Portland Type II cement/bentonite

Type of Seal: Gilt Pro #00 Sand

Type of Filter Pack: Gilt Pro #1 Sand

Type of Backfill: NA

Well Construction Materials

	Diameter	Type of Material
Screen	4"	Sch. 40 PVC
Riser Casing	4"	Sch 40 PVC
Flush Mount Type		

Measurements

Outer Casing Depth (ft. bgs)	NA
Riser pipe length (ft)	50
Screen length (ft)	5'
Screen slot size (in)	0.010
Depth to water (ft. bgs)	
Depth to bedrock (ft. bgs)	

Designed by:

Affiliation:

REMARKS: RLWalker 10/19/00

NOT TO SCALE

Depths - (feet below ground surface)

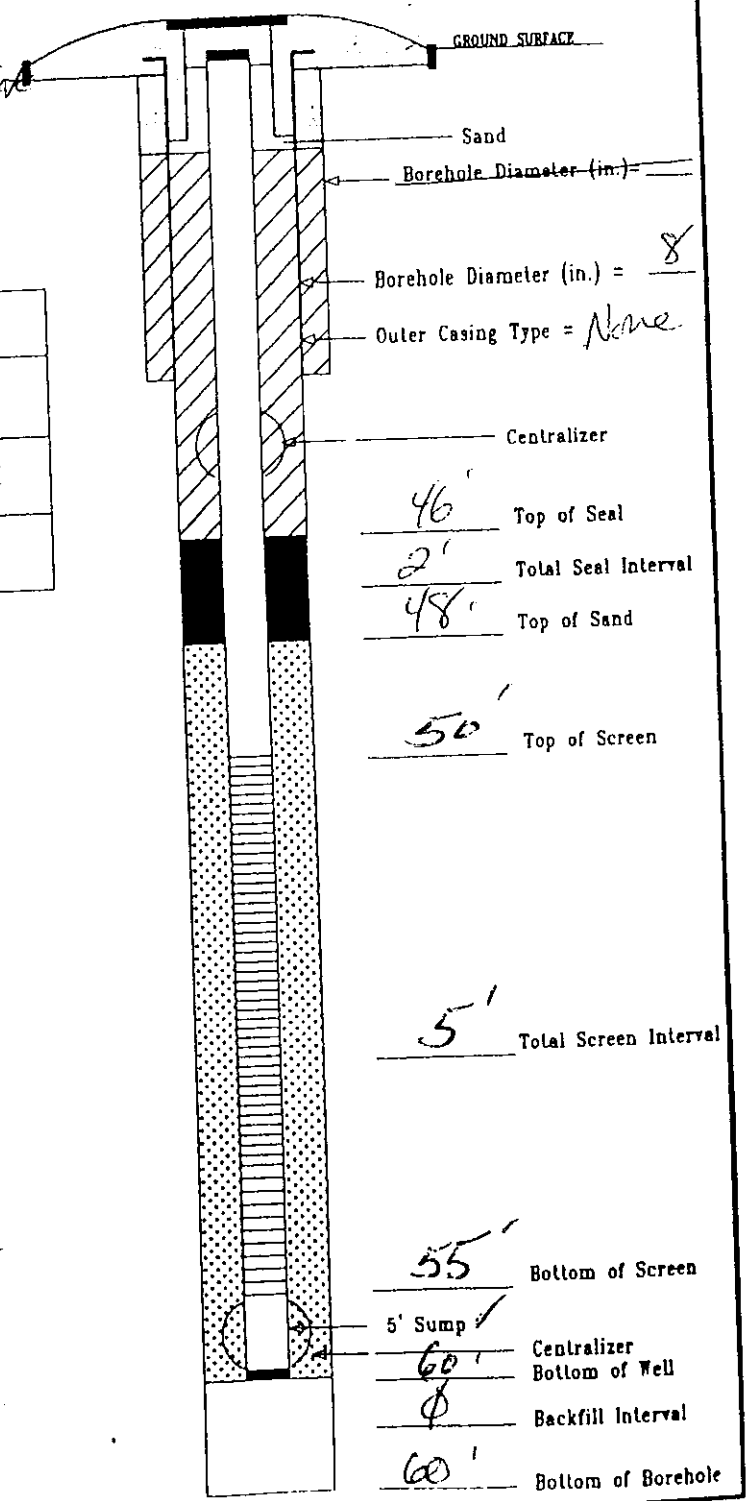

DOUBLE-FORM PUCHACK.CPI FEDERAL.CDT 6/28/00

DWR-138 M
11/98

New Jersey Department of Environmental Protection
Bureau of Water Allocation

MONITORING WELL RECORD

Well Permit No. 31 - 58635

Atlas Sheet Coordinates 31 : 02 : 267

OWNER IDENTIFICATION - Owner PENNSAUKEN TOWNSHIP
Address 5605 CRESCENT BLVD.
City PENNSAUKEN State NJ Zip Code

WELL LOCATION - If not the same as owner please give address. Owner's Well No. MW 21 M
County CAMDEN Municipality PENNSAUKEN TWP. Lot No. 9 Block No. 2101
Address CAPITAL HIGHWAY

DATE WELL STARTED 10/20/00
DATE WELL COMPLETED 10/20/00

TYPE OF WELL (as per Well Permit Categories) MONITORING
Regulatory Program Requiring Well Case I.D.#

CONSULTING FIRM/FIELD SUPERVISOR (if applicable) CDM Federal Programs Tele. # 212-785-9123

WELL CONSTRUCTION

Total depth drilled 60 ft.
Well finished to 60 ft.

Borehole diameter:
Top 4 in.
Bottom in.

Well was finished: ☐ above grade ☒ flush mounted

If finished above grade, casing height (stick up) above land surface ft.

Was steel protective casing installed? ☒ Yes ☐ No

Static water level after drilling 32.23 ft.

Water level was measured using M.Scope

Well was developed for 4 hours at 25 gpm

Method of development AIRLift

Was permanent pumping equipment installed? ☐ Yes ☒ No

Pump capacity NA gpm

Pump type: NA

Drilling Fluid Bentonite Type of Rig Failing 1500

Health and Safety Plan submitted? ☒ Yes ☐ No

Level of Protection used on site (circle one) None D C B A

Note: Measure all depths from land surface	Depth to Top (ft.)	Depth to Bottom (ft.)	Diameter (inches)	Material	Wgt./Rating (lbs/sch no.)
Single/Inner Casing	0	50	4"	PVC	Sch 40
Middle Casing (for triple cased wells only)					
Outer Casing (largest diameter)					
Open Hole or Screen (No. Used .010)	50	55	4"	PVC	Sch 40
Blank Casings (No. Used)					
Tail Piece					
Gravel Pack	46	60		#1 Sand	
Grout	0	46		Neat Cement Bentonite	250 lbs. 20 lbs.

Grouting Method Pressure Tremie
Drilling Method Mud Rotary

GEOLOGIC LOG

Note each depth where water was encountered in consolidated formations.

0-15 Clay
15-60 MC # Sand

I certify that I have constructed the above referenced well in accordance with all well permit requirements and applicable State rules and regulations.

Drilling Company UNI-TECH DRILLING
Well Driller (Print) Karl Hitzelberger
Driller's Signature Karl Hitzelberger
Registration No. M1530 Date 6/30/01

COPIES: White - DEP Canary - Driller Pink - Owner Goldenrod - Health Dept.

THIS FORM MUST BE COMPLETED BY THE PERMITTEE OR HIS/HER AGENT

GROUND WATER MONITORING WELL CERTIFICATION - FORM B - LOCATION CERTIFICATION

Name of Permittee: U.S. Environmental Protection Agency
Name of Facility: Puchack Well Field Superfund Site
Location: Pennsauken Township, New Jersey
NJPDES Number:

LAND SURVEYOR'S CERTIFICATION

Well Permit Number (As assigned by NJDEP's Bureau of Water Allocation): 31-58635-
This number must be permanently affixed to the well casing.
Datum: NAD 1983 Horizontal - NGVD 1929 Vertical
Longitude (one-tenth of a second): West 75° 02' 42.7"
Latitude (one-tenth of a second): North 39° 58' 42.5"

North 417541.2'
East 339349.5'

Elevation of Top of Casing (cap off) (one-hundredth of a foot): WC = 20.42' IC = 20.02' GR= 20.45'
Owners Well Number (As shown on application or plans): MW-21M

BENCHMARK - NGS Monument "D 100" **ELEVATION** - 44.55'
GEOGRAPHIC POSITION - North 39° 58' 25"
West 75° 03' 37"
DATE OF SURVEY - June, 2001

AUTHENTICATION

I certify under penalty of law that I have personally examined and am familiar with the information submitted in this document and all attachments and that, based on my inquiry of those individuals immediately responsible for obtaining the information, I believe the submitted information is true, accurate and complete. I am aware that there are significant penalties for submitting false information including the possibility of fine and imprisonment.

Paul J Emilius Jr.

PROFESSIONAL LAND SURVEYOR'S SIGNATURE

Paul J. Emilius, Jr.
PROFESSIONAL LAND SURVEYOR'S NAME
(Please print or type)

SEAL

New Jersey P.L.S. License No. 37186
PROFESSIONAL LAND SURVEYOR'S LICENSE #

The Department reserves the right in cases of violation of permit specified ground water limits or Ground Water Qu Standards (N.J.A.C. 7:9-6.1 et seq.) to require that wells be resurveyed to an accuracy of one-hundredth of a second latitude and longitude. This shall not be considered to be a major modification of the N.J.P.D.E.S. permit.

formb.doc

Single

~~Double~~-Cased Monitoring Well

CDM Federal Programs Corporation

Client:	U.S. Environmental Protection Agency	Well No.:	MW-21S
Site Name:	Puchack Well Field (3220-002)	Location:	Swedesboro
Project Location:	Pennsauken, New Jersey	Drilling Date(s):	02/02/01
Drilling Contractor:	Uni-Tech Drilling Co.	Initial Water Level (ft. bgs):	
Drill Rig:	Failing CF1500	Geologist:	L. Campbell
Drilling Method:	Mud Rotary	North: East: Elevation (ft.amsl):	
		Depth to Bottom (ft. bgs):	55'

Annular Space Details

Type of Surface Seal:

Type of Annular Grout: Portland type II cement/bentonite

Type of Seal: Filter Pro # 00 Sand

Type of Filter Pack: Filter Pro # 1 Sand

Type of Backfill: Filter Pro # 00 Sand

Well Construction Materials

	Diameter	Type of Material
Screen	4"	Sch 40 PVC
Riser Casing	4"	Sch 40 PVC
Flush Mount Type		

Measurements

Outer Casing Depth (ft. bgs)	NA
Riser pipe length (ft)	45'
Screen length (ft)	5'
Screen slot size (in)	0.010
Depth to water (ft. bgs)	
Depth to bedrock (ft. bgs)	

Designed by:

Affiliation:

REMARKS:

2/2/01

NOT TO SCALE

Depths - (feet below ground surface)

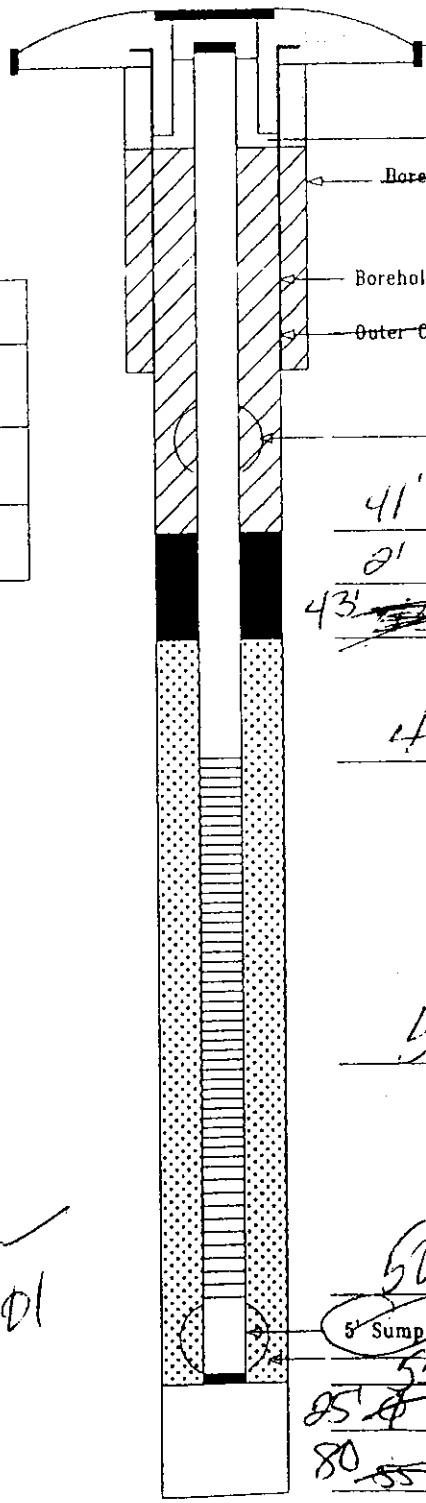

GROUND SURFACE

Sand

~~Borehole Diameter (in.)=~~

Borehole Diameter (in.) = 8

~~Outer Casing Type =~~

Centralizer

41' Top of Seal

8' Total Seal Interval

43' Top of Sand

45 Top of Screen

5' Total Screen Interval

50 Bottom of Screen

5' Sump

Centralizer

55 Bottom of Well

~~85'~~ Backfill Interval

80 ~~55~~ Bottom of Borehole

DOUBLE-FORM PUCHACK.CP2 FEDERAL.CDT 6/28/00

DWR-138 M
11/98

New Jersey Department of Environmental Protection
Bureau of Water Allocation

MONITORING WELL RECORD

Well Permit No. 31 52975

Atlas Sheet Coordinates 31 02 267

OWNER IDENTIFICATION - Owner PENNSAUKEN TOWNSHIP
Address 5605 N CRESCENT BLVD
City PENNSAUKEN State NJ Zip Code

WELL LOCATION - If not the same as owner please give address. Owner's Well No. MW-21S
County CAMDEN Municipality PENNSAUKEN TWP Lot No. N/A Block No. N/A
Address SUCKLE HWY

DATE WELL STARTED 2/2/01
DATE WELL COMPLETED 2/2/01

TYPE OF WELL (as per Well Permit Categories) MONITORING
Regulatory Program Requiring Well Case I.D.#

CONSULTING FIRM/FIELD SUPERVISOR (if applicable) CDM Federal Programs Tele. # 212-785-9123

WELL CONSTRUCTION

Total depth drilled 80' ft.
Well finished to 55 ft.

Borehole diameter:
Top 8 in.
Bottom 8 in.

Well was finished: ☐ above grade ☒ flush mounted

If finished above grade, casing height (stick up) above land surface ft.

Was steel protective casing installed? ☒ Yes ☐ No

Static water level after drilling 44.92 ft.

Water level was measured using M-Scope

Well was developed for 4 hours at gpm

Method of development Air Lift / Submersible

Was permanent pumping equipment installed? ☐ Yes ☒ No

Pump capacity NA gpm

Pump type NA

Drilling Fluid Bentonite Type of Rig Failing CF1500

Health and Safety Plan submitted? ☒ Yes ☐ No

Level of Protection used on site (circle one) None (D) C B A

Note: Measure all depths from land surface	Depth to Top (ft.)	Depth to Bottom (ft.)	Diameter (inches)	Material	Wgt./Rating (lbs/sch no.)
Single/Inner Casing	0	45'	4"	PVC	Sch 40
Middle Casing (for triple cased wells only)					
Outer Casing (largest diameter)					
Open Hole or Screen (No. Used .010)	45	50	4"	PVC	Sch 40
Blank Casings (No. Used)					
Tail Piece	50	55	4"	PVC	Sch 40
Gravel Pack	40	80		#1 Sand	800 #
Grout	0	40		Neat Cement Bentonite	50 lbs. 50 lbs.

Grouting Method pressure tremie
Drilling Method mud Rotary

GEOLOGIC LOG

Note each depth where water was encountered in consolidated formations.

0-28 brownish-yellow sand
28-52 white and yellow clay
52-80' white and red clay

I certify that I have constructed the above referenced well in accordance with all well permit requirements and applicable State rules and regulations.

Drilling Company UNI-TECH DRILLING
Well Driller (Print) Karl Hitzelberger
Driller's Signature Karl Hitzelberger
Registration No. M1530 Date 2/6/01

COPIES: White - DEP Canary - Driller Pink - Owner Goldenrod - Health Dept.

THIS FORM MUST BE COMPLETED BY THE PERMITTEE OR HIS/HER AGENT

GROUND WATER MONITORING WELL CERTIFICATION - FORM B - LOCATION CERTIFICATION

Name of Permittee: U.S. Environmental Protection Agency
Name of Facility: Puchack Well Field Superfund Site
Location: Pennsauken Township, New Jersey
NJPDES Number:

LAND SURVEYOR'S CERTIFICATION

Well Permit Number (As assigned by NJDEP's Bureau of Water Allocation): 31-59925-
This number must be permanently affixed to the well casing.
Datum: NAD 1983 Horizontal - NGVD 1929 Vertical
Longitude (one-tenth of a second): West 75° 02' 33.2"
Latitude (one-tenth of a second): North 39° 58' 47.3"

North 418019.8'
East 340093.1'

Elevation of Top of Casing (cap off) (one-hundredth of a foot): WC = 32.37' IC = 31.99' GR= 32.35'
Owners Well Number (As shown on application or plans): MW-21S

BENCHMARK - NGS Monument "D 100" **ELEVATION** - 44.55'
GEOGRAPHIC POSITION - North 39° 58' 25"
West 75° 03' 37"
DATE OF SURVEY - June, 2001

AUTHENTICATION

I certify under penalty of law that I have personally examined and am familiar with the information submitted in this document and all attachments and that, based on my inquiry of those individuals immediately responsible for obtaining the information, I believe the submitted information is true, accurate and complete. I am aware that there are significant penalties for submitting false information including the possibility of fine and imprisonment.

Paul J Emilius Jr.

PROFESSIONAL LAND SURVEYOR'S SIGNATURE

Paul J. Emilius, Jr.
PROFESSIONAL LAND SURVEYOR'S NAME
(Please print or type)

SEAL

New Jersey P.L.S. License No. 37186
PROFESSIONAL LAND SURVEYOR'S LICENSE #

The Department reserves the right in cases of violation of permit specified ground water limits or Ground Water Qu Standards (N.J.A.C. 7:9-6.1 et seq.) to require that wells be resurveyed to an accuracy of one-hundredth of a second lati and longitude. This shall not be considered to be a major modification of the N.J.P.D.E.S. permit.

formb.doc

CDM Federal Programs Corporation

Double-Cased Monitoring Well

Client:	U.S. Environmental Protection Agency
Site Name:	Puchack Well Field (3220-002)
Project Location:	Pennsauken, New Jersey
Drilling Contractor:	Uni-Tech Drilling Co.
Drill Rig:	FAILING 1500
Drilling Method:	MUD ROTARY

Well No.:	MW 22D
Location:	Rt 90 NR Remington
Drilling Date(s):	9/~~15~~14 - 9/21/00
Initial Water Level (ft. bgs):	
Geologist:	M Akbar
North:	East:
Elevation (ft.amsl):	25 ± 2
Depth to Bottom (ft. bgs):	200'

Annular Space Details

Type of Surface Seal:

Type of Annular Grout: Portland Type II CEMENT/BENTONITE

Type of Seal: Filter Pro NO. 00 SAND

Type of Filter Pack: Filter Pro NO. 1 SAND

Type of Backfill:

Well Construction Materials

	Diameter	Type of Material
Screen	4"	PVC SCH 40
Riser Casing	4"	PVC SCH 40
Flush Mount Type		

Measurements

Outer Casing Depth (ft. bgs)	150
Riser pipe length (ft)	190
Screen length (ft)	10
Screen slot size (in)	0.010
Depth to water (ft. bgs)	39.0
Depth to bedrock (ft. bgs)	

Designed by: DICK WALKER

Affiliation: USGS

Proposed Screen Interval
R.E. Walker USGS

REMARKS: Drill to 200' if sediments remain very coarse use option "A" If Clay or Rock is encountered then use option "B"

NOT TO SCALE

Depths - (feet below ground surface)

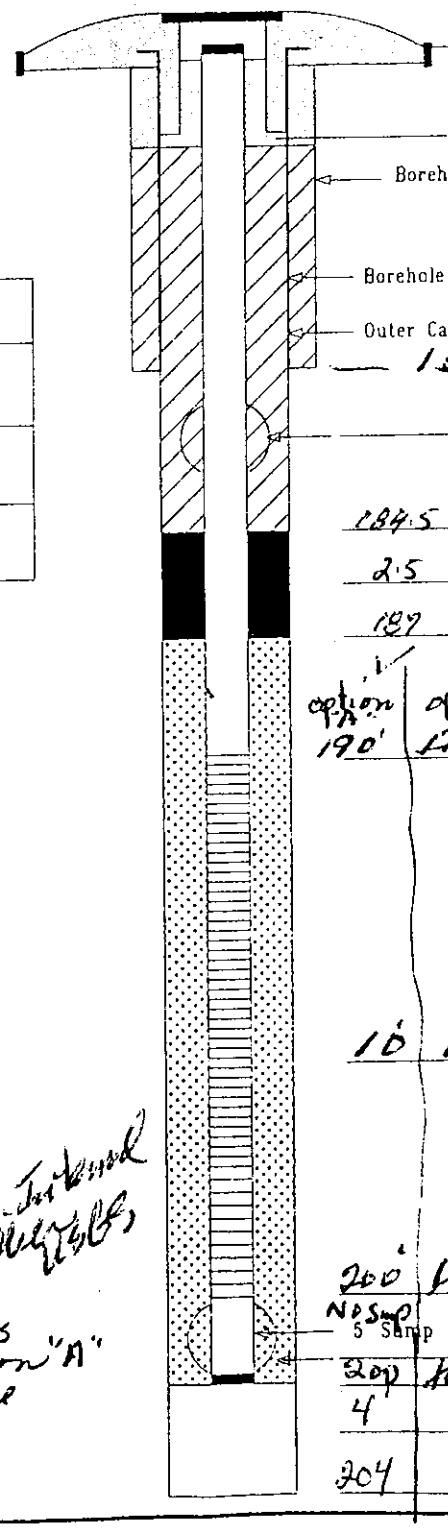

DOUBLE-FORM PUCHACK.GPJ FEDERAL.GDT 6/28/00

DWR-138 M
11/98

New Jersey Department of Environmental Protection
Bureau of Water Allocation

MONITORING WELL RECORD

Well Permit No. 31 - 50571

Atlas Sheet Coordinates 31 - 02 - 283

OWNER IDENTIFICATION - Owner DELAWARE RIVER PORT AUTHO
Address 1 BETSY ROSS BRIDGE PLAZA
City PENNSAUKEN State NJ Zip Code

WELL LOCATION - If not the same as owner please give address. Owner's Well No. MW 22D
County CAMDEN Municipality PENNSAUKEN TWP Lot No. N/A Block No. N/A
Address REMMINGTON AVE.

DATE WELL STARTED 9/15/00
DATE WELL COMPLETED 9/20/00

TYPE OF WELL (as per Well Permit Categories) MONITORING
Regulatory Program Requiring Well Case I.D.#

CONSULTING FIRM/FIELD SUPERVISOR (if applicable) CDM Federal Programs Tele. # 212-785-9123

WELL CONSTRUCTION

Total depth drilled 204 ft.
Well finished to 200 ft.

Borehole diameter:
Top 13 in.
Bottom 8 in.

Well was finished: ☐ above grade ☒ flush mounted

If finished above grade, casing height (stick up) above land surface ____ ft.

Was steel protective casing installed? ☐ Yes ☐ No

Static water level after drilling 40.2 ft.

Water level was measured using WLI

Well was developed for 5 hours at 10 gpm

Method of development Airlift/Submersible

Was permanent pumping equipment installed? ☐ Yes ☐ No

Pump capacity N/A gpm

Pump type: N/A

Drilling Fluid Bentonite Type of Rig F-1500

Health and Safety Plan submitted? ☒ Yes ☐ No

Level of Protection used on site (circle one) None (D) C B A

Note: Measure all depths from land surface	Depth to Top (ft.)	Depth to Bottom (ft.)	Diameter (inches)	Material	Wgt./Rating (lbs/sch no.)
Single/Inner Casing	0	170	4	PVC	40
Middle Casing (for triple cased wells only)					
Outer Casing (largest diameter)	0	150	8	Steel	40 28#/Ft
Open Hole or Screen (No. Used .010)	170	200	4	PVC	40
Blank Casings (No. Used)					
Tail Piece					
Gravel Pack	185	204	8	#1	700#
Grout	0	150	13	Neat Cement	15000 lbs.
	0	185	8	Bentonite	400 lbs.

Grouting Method Pressure Trexie
Drilling Method Mud Rotary

GEOLOGIC LOG

Note each depth where water was encountered in consolidated formations.

0-80' CMF Sand w/ clay lenses
80'-90' Clay
90'-148' CMF sand w/ clay stringers
148'-152' Lt gray clay
152'-204' CMF Sand w/ trace clay

I certify that I have constructed the above referenced well in accordance with all well permit requirements and applicable State rules and regulations.

Drilling Company UNI-TECH DRILLING
Well Driller (Print) Karl Hitzelberger
Driller's Signature Karl Hitzelberger
Registration No. M1530 Date 9/16/01

COPIES: White - DEP Canary - Driller Pink - Owner Goldenrod - Health Dept.

THIS FORM MUST BE COMPLETED BY THE PERMITTEE OR HIS/HER AGENT

GROUND WATER MONITORING WELL CERTIFICATION - FORM B - LOCATION CERTIFICATION

Name of Permittee: U.S. Environmental Protection Agency
Name of Facility: Puchack Well Field Superfund Site
Location: Pennsauken Township, New Jersey
NJPDES Number:

LAND SURVEYOR'S CERTIFICATION

Well Permit Number (As assigned by NJDEP's Bureau of Water Allocation): 31-58571-
This number must be permanently affixed to the well casing.
Datum: NAD 1983 Horizontal - NGVD 1929 Vertical
Longitude (one-tenth of a second): West 75° 02' 51.2"
Latitude (one-tenth of a second): North 39° 58' 32.9"

North 416577.9'
East 338683.8'

Elevation of Top of Casing (cap off) (one-hundredth of a foot): WC = 23.71' IC = 23.45' GR= 23.72'
Owners Well Number (As shown on application or plans): MW-22D

BENCHMARK - NGS Monument "D 100"
GEOGRAPHIC POSITION - North 39° 58' 25"
West 75° 03' 37"
DATE OF SURVEY - June, 2001

ELEVATION - 44.55'

AUTHENTICATION

I certify under penalty of law that I have personally examined and am familiar with the information submitted in this document and all attachments and that, based on my inquiry of those individuals immediately responsible for obtaining the information, I believe the submitted information is true, accurate and complete. I am aware that there are significant penalties for submitting false information including the possibility of fine and imprisonment.

Paul J Emilius Jr.

PROFESSIONAL LAND SURVEYOR'S SIGNATURE

Paul J. Emilius, Jr.
PROFESSIONAL LAND SURVEYOR'S NAME
(Please print or type)

SEAL

New Jersey P.L.S. License No. 37186
PROFESSIONAL LAND SURVEYOR'S LICENSE #

The Department reserves the right in cases of violation of permit specified ground water limits or Ground Water Qu Standards (N.J.A.C. 7:9-6.1 et seq.) to require that wells be resurveyed to an accuracy of one-hundredth of a second latitu and longitude. This shall not be considered to be a major modification of the N.J.P.D.E.S. permit.

formb.doc

CDM Federal Programs Corporation

Double-Cased Monitoring Well

Client: U.S. Environmental Protection Agency
Site Name: Puchack Well Field (3220-002)
Project Location: Pennsauken, New Jersey
Drilling Contractor: Uni-Tech Drilling Co.
Drill Rig: FAILING 1500
Drilling Method: Mud rotary

Well No.: MW-22 I
Location: Rt 90 near Remington
Drilling Date(s): 9/22 - 9/25/00
Initial Water Level (ft. bgs):
Geologist: M. AKBAR
North: East: Elevation (ft.amsl): 25
Depth to Bottom (ft. bgs): 115'

Annular Space Details

Type of Surface Seal:
Type of Annular Grout: CEMENT/BENTONITE
Type of Seal: Filter Pro. 00 SAND
Type of Filter Pack: Filter Pro. 1 SAND
Type of Backfill: Filter Pro #1 sand

Well Construction Materials

	Diameter	Type of Material
Screen	4"	PVC SCH 40
Riser Casing	4"	PVC SCH 40
Flush Mount Type		

Measurements

Outer Casing Depth (ft. bgs)	85
Riser pipe length (ft)	110
Screen length (ft)	5
Screen slot size (in)	0.010
Depth to water (ft. bgs)	36.5
Depth to bedrock (ft. bgs)	

Designed by: DICK WALKER
Affiliation: USGS

REMARKS:

R L Walker 9/26/00

NOT TO SCALE

Depths - (feet below ground surface)

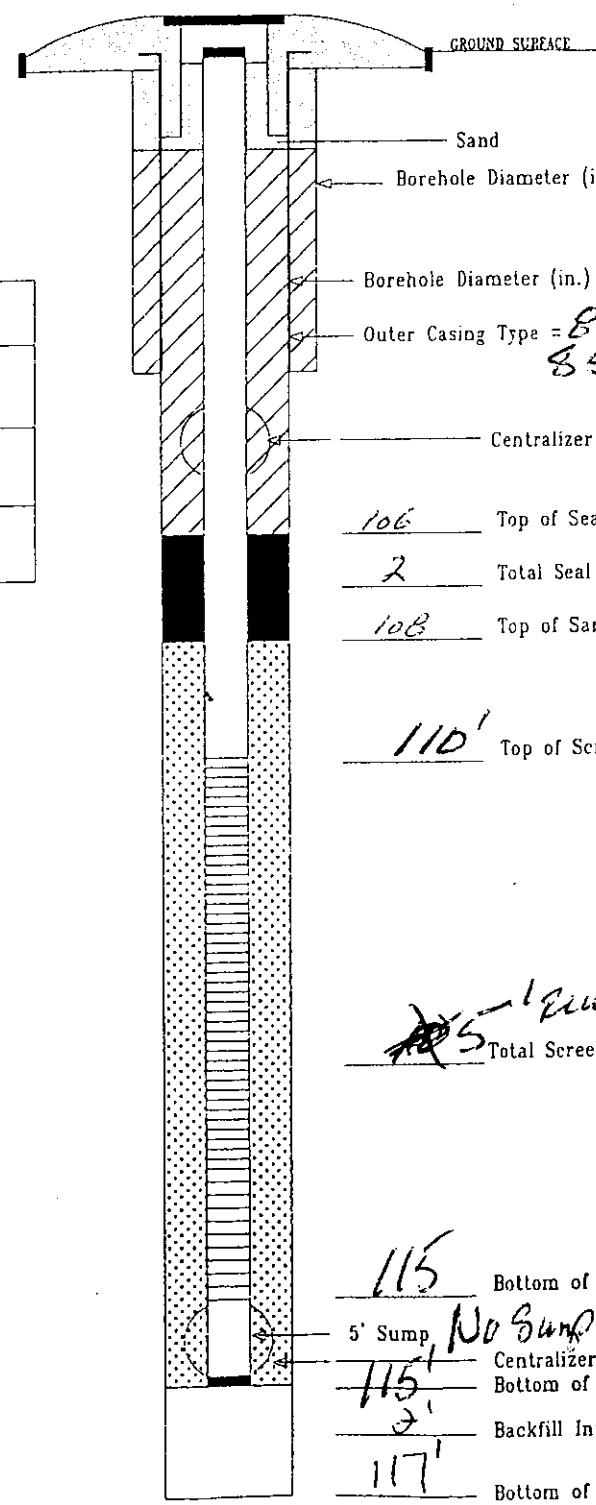

DOUBLE-FORM PUCHACK.GPJ PEDERAL.GDT 6/28/00

DWR-138 M
11/98

New Jersey Department of Environmental Protection
Bureau of Water Allocation

MONITORING WELL RECORD

Well Permit No. 31 - 58572

Atlas Sheet Coordinates 31 02 203

OWNER IDENTIFICATION - Owner DELAWARE RIVER PORT AUTHO
Address 1 BETSY ROSS BRIDGE PLAZA
City PENNSAUKEN State NJ Zip Code

WELL LOCATION - If not the same as owner please give address. Owner's Well No. MW 22I
County CAMDEN Municipality PENNSAUKEN TWP Lot No. N/A Block No. N/A
Address REMMINGTON AVE.

DATE WELL STARTED 9 / 22 / 00
DATE WELL COMPLETED 11 / 30 / 00

TYPE OF WELL (as per Well Permit Categories) MONITORING
Regulatory Program Requiring Well Case I.D.#

CONSULTING FIRM/FIELD SUPERVISOR (if applicable) CDM Federal Programs Tele. #

WELL CONSTRUCTION

Total depth drilled 118 ft.
Well finished to 115 ft.

Borehole diameter:
Top 13 in.
Bottom 8 in.

Well was finished: ☐ above grade ☒ flush mounted

If finished above grade, casing height (stick up) above land surface ____ ft.

Was steel protective casing installed? ☒ Yes ☐ No

Static water level after drilling 41 ft.

Water level was measured using NLI

Well was developed for 5 hours at 10 gpm

Method of development Air lift/Submersible

Was permanent pumping equipment installed? ☐ Yes ☒ No

Pump capacity N/A gpm

Pump type: N/A

Drilling Fluid Bentonite Type of Rig F-1500

Health and Safety Plan submitted? ☒ Yes ☐ No

Level of Protection used on site (circle one) None (D) C B A

Note: Measure all depths from land surface	Depth to Top (ft.)	Depth to Bottom (ft.)	Diameter (inches)	Material	Wgt./Rating (lbs/sch no.)
Single/Inner Casing	0	110	4	PVC	40
Middle Casing (for triple cased wells only)					
Outer Casing (largest diameter)	0	85	8	Steel	40 28#/Ft
Open Hole or Screen (No. Used)	110	115	4	PVC	40
Blank Casings (No. Used)					
Tail Piece					
Gravel Pack	106	118	8	#1	500 #
Grout	0	85	13	Neat Cement	1000 lbs.
	0	106	8	Bentonite	150 lbs.

Grouting Method Pressure Tremie
Drilling Method Mud Rotary

GEOLOGIC LOG

Note each depth where water was encountered in consolidated formations.

0-80' CMF sand w/ clay lenses
80'-90' Clay
90'-118' CMF Sand

I certify that I have constructed the above referenced well in accordance with all well permit requirements and applicable State rules and regulations.

Drilling Company UNI-TECH DRILLING

Well Driller (Print) Karl Hitzelberger

Driller's Signature Karl Hitzelberger

Registration No. M1530 Date 7/6/01

COPIES: White - DEP Canary - Driller Pink - Owner Goldenrod - Health Dept.

THIS FORM MUST BE COMPLETED BY THE PERMITTEE OR HIS/HER AGENT

GROUND WATER MONITORING WELL CERTIFICATION - FORM B - LOCATION CERTIFICATION

Name of Permittee: U.S. Environmental Protection Agency
Name of Facility: Puchack Well Field Superfund Site
Location: Pennsauken Township, New Jersey
NJPDES Number:

LAND SURVEYOR'S CERTIFICATION

Well Permit Number (As assigned by NJDEP's Bureau of Water Allocation): 31-58572-
This number must be permanently affixed to the well casing.
Datum: NAD 1983 Horizontal - NGVD 1929 Vertical
Longitude (one-tenth of a second): West 75° 02' 51.3"
Latitude (one-tenth of a second): North 39° 58' 33.0"

North 416583.5'
East 338674.8'

Elevation of Top of Casing (cap off) (one-hundredth of a foot): WC = 23.59' IC = 23.27' GR= 23.58'
Owners Well Number (As shown on application or plans): MW-22I

BENCHMARK - NGS Monument "D 100"
GEOGRAPHIC POSITION - North 39° 58' 25"
West 75° 03' 37"
DATE OF SURVEY - June, 2001

ELEVATION - 44.55'

AUTHENTICATION

I certify under penalty of law that I have personally examined and am familiar with the information submitted in this document and all attachments and that, based on my inquiry of those individuals immediately responsible for obtaining the information, I believe the submitted information is true, accurate and complete. I am aware that there are significant penalties for submitting false information including the possibility of fine and imprisonment.

Paul J Emilius Jr.

PROFESSIONAL LAND SURVEYOR'S SIGNATURE

Paul J. Emilius, Jr.
PROFESSIONAL LAND SURVEYOR'S NAME
(Please print or type)

SEAL

New Jersey P.L.S. License No. 37186
PROFESSIONAL LAND SURVEYOR'S LICENSE #

The Department reserves the right in cases of violation of permit specified ground water limits or Ground Water Qu Standards (N.J.A.C. 7:9-6.1 et seq.) to require that wells be resurveyed to an accuracy of one-hundredth of a second latitu and longitude. This shall not be considered to be a major modification of the N.J.P.D.E.S. permit.

formb.doc

CDM Federal Programs Corporation

Double-Cased Monitoring Well

Client:	U.S. Environmental Protection Agency	Well No.:	MW 23D
Site Name:	Puchack Well Field (3220-002)	Location:	Sherman Ave. Lanc
Project Location:	Pennsauken, New Jersey	Drilling Date(s):	12/18/00 - 12/22/00
Drilling Contractor:	Uni-Tech Drilling Co.	Initial Water Level (ft. bgs):	
Drill Rig:	Failing 1500	Geologist:	~~John Grados~~ Andrea So
Drilling Method:	Mud Rotary	North: East: Elevation (ft.amsl):	
		Depth to Bottom (ft. bgs):	225

Annular Space Details

Type of Surface Seal:

Type of Annular Grout: Portland Type II cement/bentonite

Type of Seal: FilterPro #-00 sand

Type of Filter Pack: FilterPro #1 sand

Type of Backfill: FilterPro #1 sand

Well Construction Materials

	Diameter	Type of Material
Screen	4"	Sch 40 PVC
Riser Casing	4"	Sch 40 PVC
Flush Mount Type		

Measurements

Outer Casing Depth (ft. bgs)	160
Riser pipe length (ft)	216
Screen length (ft)	10
Screen slot size (in)	0.010
Depth to water (ft. bgs)	
Depth to bedrock (ft. bgs)	

Designed by:

Affiliation:

REMARKS:

12/14/00

NOT TO SCALE

Depths - (feet below ground surface)

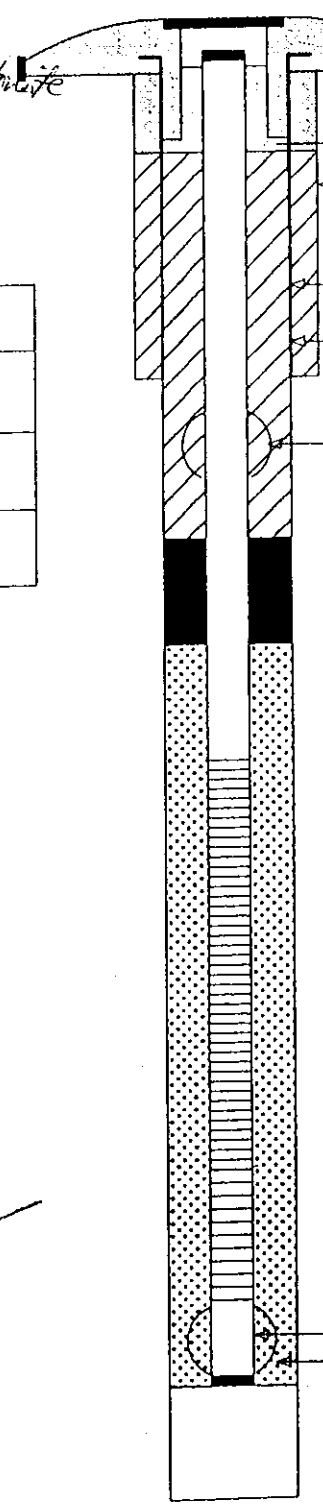

GROUND SURFACE

Sand

Borehole Diameter (in.)= 12

Borehole Diameter (in.) = 8

Outer Casing Type = 8" Steel

160

Centralizer

204' Top of Seal

3' Total Seal Interval

210' Top of Sand

210 Top of Screen

10 Total Screen Interval

220 Bottom of Screen

5' Sump 4.5

Centralizer

~~225~~ Bottom of Well

21' Backfill Interval

246' Bottom of Borehole

DOUBLE-FORM PUCHACK.GPJ FEDERAL.GDT 6/28/00

DWR-138 M
11/96

New Jersey Department of Environmental Protection
Bureau of Water Allocation

MONITORING WELL RECORD

Well Permit No. 31 - 59366

Atlas Sheet Coordinates 31 . 02 . 276

OWNER IDENTIFICATION - Owner PENNSAUKEN, TWP. OF
Address 5605 CRESCENT BLVD.
City PENNSAUKEN State NJ Zip Code

WELL LOCATION - If not the same as owner please give address. Owner's Well No. MW 23D
County CAMDEN Municipality PENNSAUKEN TWP Lot No. 3 Block No. 1102
Address SHERMAN AVENUE LANE

DATE WELL STARTED 12/19/00
DATE WELL COMPETED 12/22/00

TYPE OF WELL (as per Well Permit Categories) MONITORING
Regulatory Program Requiring Well Case I.D.#

CONSULTING FIRM/FIELD SUPERVISOR (if applicable) CDM Federal Programs Tele. # 212-785-9123

WELL CONSTRUCTION

Total depth drilled 246 ft.
Well finished to 225 ft.

Borehole diameter:
Top 12 in.
Bottom 8 in.

Well was finished: ☐ above grade ☒ flush mounted

If finished above grade, casing height (stick up) above land surface ____ ft.

Was steel protective casing installed? ☒ Yes ☐ No

Static water level after drilling 63.86 ft.

Water level was measured using M-Scope

Well was developed for 4 hours at 25 gpm

Method of development Submersible

Was permanent pumping equipment installed? ☐ Yes ☒ No

Pump capacity NA gpm

Pump type:

Drilling Fluid Bentonite Type of Rig Failing 1500

Health and Safety Plan submitted? ☒ Yes ☐ No

Level of Protection used on site (circle one) None (D) C B A

Note: Measure all depths from land surface	Depth to Top (ft.)	Depth to Bottom (ft.)	Diameter (inches)	Material	Wgt./Rating (lbs/sch no.)
Single/Inner Casing	0	210	4"	PVC	Sch 40
Middle Casing (for triple cased wells only)					
Outer Casing (largest diameter)	0	160	8"	Steel	Sch 40
Open Hole or Screen (No. Used .010)	210	220	4"	PVC	Sch 40
Blank Casings (No. Used)					
Tail Piece					
Gravel Pack	204	246		#1 Morie	
Grout	0	204		Neat Cement Bentonite	4000 lbs. 120 lbs.

Grouting Method Pressure Tremie
Drilling Method Mud Rotary

GEOLOGIC LOG

Note each depth where water was encountered in consolidated formations.

0-40 mf sand
40-136 Clay and sand
136-175 Light gray sand
175-225 CMF sand w/ trace clay
225-246 lt gray clay

I certify that I have constructed the above referenced well in accordance with all well permit requirements and applicable State rules and regulations.

Drilling Company UNI-TECH DRILLING
Well Driller (Print) Karl Hitzelberger
Driller's Signature Karl Hitzelberger
Registration No. M1530 Date 7/6/01

COPIES: White - DEP Canary - Driller Pink - Owner Goldenrod - Health Dept.

THIS FORM MUST BE COMPLETED BY THE PERMITTEE OR HIS/HER AGENT

GROUND WATER MONITORING WELL CERTIFICATION - FORM B - LOCATION CERTIFICATION

Name of Permittee: U.S. Environmental Protection Agency
Name of Facility: Puchack Well Field Superfund Site
Location: Pennsauken Township, New Jersey
NJPDES Number:

LAND SURVEYOR'S CERTIFICATION

Well Permit Number (As assigned by NJDEP's Bureau of Water Allocation): 31-59366-
This number must be permanently affixed to the well casing.
Datum: NAD 1983 Horizontal - NGVD 1929 Vertical
Longitude (one-tenth of a second): West 75° 03' 30.8"
Latitude (one-tenth of a second): North 39° 58' 22.8"

North 415569.9'
East 335592.4'

Elevation of Top of Casing (cap off) (one-hundredth of a foot): WC = 53.96' IC = 53.55' GR= 53.95'
Owners Well Number (As shown on application or plans): MW-23D

BENCHMARK - NGS Monument "D 100"
GEOGRAPHIC POSITION - North 39° 58' 25"
West 75° 03' 37"
DATE OF SURVEY - June, 2001

ELEVATION - 44.55'

AUTHENTICATION

I certify under penalty of law that I have personally examined and am familiar with the information submitted in this document and all attachments and that, based on my inquiry of those individuals immediately responsible for obtaining the information, I believe the submitted information is true, accurate and complete. I am aware that there are significant penalties for submitting false information including the possibility of fine and imprisonment.

Paul J Emilius Jr.

PROFESSIONAL LAND SURVEYOR'S SIGNATURE

Paul J. Emilius, Jr.
PROFESSIONAL LAND SURVEYOR'S NAME
(Please print or type)

SEAL

New Jersey P.L.S. License No. 37186
PROFESSIONAL LAND SURVEYOR'S LICENSE #

The Department reserves the right in cases of violation of permit specified ground water limits or Ground Water Qu Standards (N.J.A.C. 7:9-6.1 et seq.) to require that wells be resurveyed to an accuracy of one-hundredth of a second lati and longitude. This shall not be considered to be a major modification of the N.J.P.D.E.S. permit.

formb.doc

CDM Federal Programs Corporation

Double-Cased Monitoring Well

Client: U.S. Environmental Protection Agency
Site Name: Puchack Well Field (3220-002)
Project Location: Pennsauken, New Jersey
Drilling Contractor: Uni-Tech Drilling Co.
Drill Rig: Failing 1500
Drilling Method: Failing 1500

Well No.: MW 23 I
Location: Sherman Ave Lane
Drilling Date(s): ~~12~~/10 — 12/18/00
Initial Water Level (ft. bgs):
Geologist: John Corrado
North: East: Elevation (ft.amsl):
Depth to Bottom (ft. bgs): 152

Annular Space Details

Type of Surface Seal:
Type of Annular Grout: Portland Type II cement/bentonite
Type of Seal: Filter Pro #00 sand
Type of Filter Pack: Filter Pro #1 Sand
Type of Backfill: See remarks

Well Construction Materials

	Diameter	Type of Material
Screen	4"	Sch 40 PVC
Riser Casing	4"	Sch 40 PVC
Flush Mount Type		

Measurements

Outer Casing Depth (ft. bgs)	~~149~~ 131'
Riser pipe length (ft)	147
Screen length (ft)	5
Screen slot size (in)	0.010
Depth to water (ft. bgs)	
Depth to bedrock (ft. bgs)	265'

Designed by:
Affiliation:

REMARKS: backfill:
152-154: Filter Pro #1 Sand
154-160: Filter Pro #00 sand
160-162: Portland Type II cement/bentonite grout
162-265: Filter Pro #1 sand

12/14/00

NOT TO SCALE

Depths – (feet below ground surface)

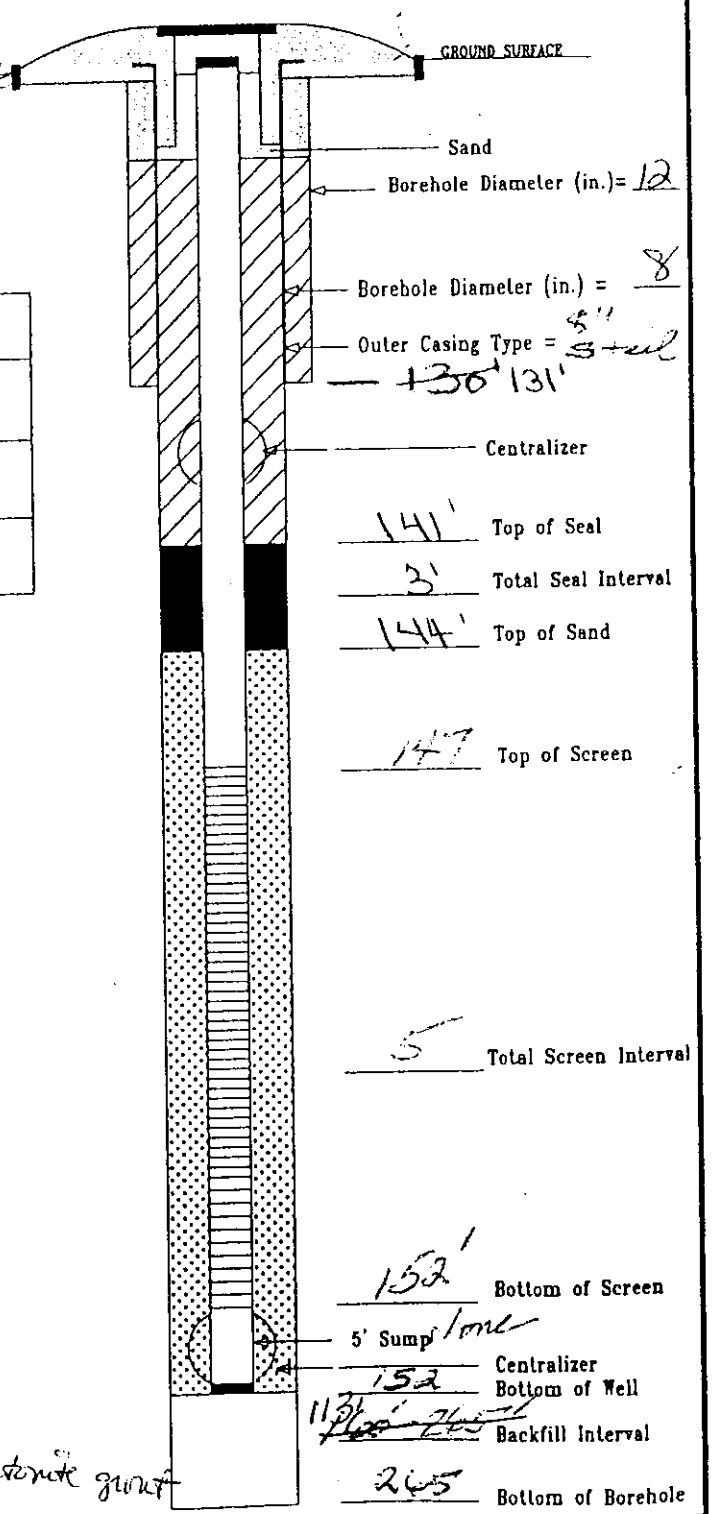

DOUBLE-FORM PUCHACK.CPI FEDERAL.CDT 6/28/00

DWR-138 M
11/96

New Jersey Department of Environmental Protection
Bureau of Water Allocation

MONITORING WELL RECORD

Well Permit No. 31 - 59367

Atlas Sheet Coordinates 31 . 02 276

OWNER IDENTIFICATION - Owner PENNSAUKEN, TWP. OF
Address 5605 CRESCENT BLVD.
City PENNSAUKEN State NJ Zip Code

WELL LOCATION - If not the same as owner please give address. Owner's Well No. MW 23 I
County CAMDEN Municipality PENNSAUKEN TWP Lot No. 3 Block No. 1102
Address SHERMAN AVENUE LANE

DATE WELL STARTED 12/10/00
DATE WELL COMPETED 12/18/00

TYPE OF WELL (as per Well Permit Categories) MONITORING
Regulatory Program Requiring Well Case I.D.#

CONSULTING FIRM/FIELD SUPERVISOR (if applicable) CDM Federal Programs Tele. # 212-785-9123

WELL CONSTRUCTION

Total depth drilled 265 ft.
Well finished to 152 ft.

Borehole diameter:
Top 12 in.
Bottom 8 in.

Well was finished: ☐ above grade
☒ flush mounted

If finished above grade, casing height (stick up) above land surface ____ ft.

Was steel protective casing installed?
☒ Yes ☐ No

Static water level after drilling 64.01 ft.

Water level was measured using M-Scope

Well was developed for 4 hours
at 25 gpm

Method of development Submersible

Was permanent pumping equipment installed? ☐ Yes ☒ No

Pump capacity NA gpm

Pump type: NA

Drilling Fluid Bentonite Type of Rig Failing 1500

Health and Safety Plan submitted? ☒ Yes ☐ No

Level of Protection used on site (circle one) None (D) C B A

Note: Measure all depths from land surface	Depth to Top (ft.)	Depth to Bottom (ft.)	Diameter (inches)	Material	Wgt./Rating (lbs/sch no.)
Single/Inner Casing	0	147	4"	PVC	Sch 40
Middle Casing (for triple cased wells only)					
Outer Casing (largest diameter)	0	131	8"	Steel	Sch 40
Open Hole or Screen (No. Used .010)	147	152	4"	PVC	Sch 40
Blank Casings (No. Used)					
Tail Piece					
Gravel Pack	141	265		#1 Morie	
Grout	0	131		Neat Cement	12000 lbs.
	0	141		Bentonite	250 lbs.

Grouting Method Pressure Tremie
Drilling Method mud Rotary

I certify that I have constructed the above referenced well in accordance with all well permit requirements and applicable State rules and regulations.

Drilling Company UNI-TECH DRILLING

Well Driller (Print) Karl Hitzelberger

Driller's Signature Karl Hitzelberger

Registration No. M1530 Date 7/6/01

GEOLOGIC LOG

Note each depth where water was encountered in consolidated formations

0-12 Silty clay
12-44 (?) sand and gravel
44-120 yellow clay
120-148 silt and clay
148-160 white sand
160-196 white sand and gravel
196-265 gravel, cobbles, and sand

COPIES: White - DEP Canary - Driller Pink - Owner Goldenrod - Health Dept.

THIS FORM MUST BE COMPLETED BY THE PERMITTEE OR HIS/HER AGENT

GROUND WATER MONITORING WELL CERTIFICATION - FORM B - LOCATION CERTIFICATION

Name of Permittee: U.S. Environmental Protection Agency
Name of Facility: Puchack Well Field Superfund Site
Location: Pennsauken Township, New Jersey
NJPDES Number:

LAND SURVEYOR'S CERTIFICATION

Well Permit Number (As assigned by NJDEP's Bureau of Water Allocation): 31-59367-
This number must be permanently affixed to the well casing.
Datum: NAD 1983 Horizontal - NGVD 1929 Vertical
Longitude (one-tenth of a second): West 75° 03' 30.7"
Latitude (one-tenth of a second): North 39° 58' 22.9"

North 415577.5'
East 335598.4'

Elevation of Top of Casing (cap off) (one-hundredth of a foot): WC = 53.99' IC = 53.79' GR= 53.98'
Owners Well Number (As shown on application or plans): MW-23I

BENCHMARK - NGS Monument "D 100"
GEOGRAPHIC POSITION - North 39° 58' 25"
West 75° 03' 37"
DATE OF SURVEY - June, 2001

ELEVATION - 44.55'

AUTHENTICATION

I certify under penalty of law that I have personally examined and am familiar with the information submitted in this document and all attachments and that, based on my inquiry of those individuals immediately responsible for obtaining the information, I believe the submitted information is true, accurate and complete. I am aware that there are significant penalties for submitting false information including the possibility of fine and imprisonment.

Paul J Emilius Jr.

PROFESSIONAL LAND SURVEYOR'S SIGNATURE

Paul J. Emilius, Jr.
PROFESSIONAL LAND SURVEYOR'S NAME
(Please print or type)

SEAL

New Jersey P.L.S. License No. 37186
PROFESSIONAL LAND SURVEYOR'S LICENSE #

The Department reserves the right in cases of violation of permit specified ground water limits or Ground Water Qu Standards (N.J.A.C. 7:9-6.1 et seq.) to require that wells be resurveyed to an accuracy of one-hundredth of a second lat. and longitude. This shall not be considered to be a major modification of the N.J.P.D.E.S. permit.

CDM Federal Programs Corporation

Double-Cased Monitoring Well

Client: U.S. Environmental Protection Agency
Site Name: Puchack Well Field (3220-002)
Project Location: Pennsauken, New Jersey
Drilling Contractor: Uni-Tech Drilling Co.
Drill Rig: Failing 1500
Drilling Method: MUD ROTARY

Well No.: MW 23 M
Location: Sherman Ave Lane
Drilling Date(s): 12/04 → 1/4/01
Initial Water Level (ft. bgs):
Geologist: J. Grato → M. Akbar
North: East: Elevation (ft.amsl):
Depth to Bottom (ft. bgs): 123'

Annular Space Details

Type of Surface Seal:
Type of Annular Grout: Portland Type Cement/Bentonite
Type of Seal: Filter Pro No. 00 Sand
Type of Filter Pack: Filterpro No. 1 Sand
Type of Backfill: Filterpro No. 1 Sand

Well Construction Materials

	Diameter	Type of Material
Screen	4"	PVC SCH 40
Riser Casing	4"	PVC SCH 40
Flush Mount Type		

Measurements

Outer Casing Depth (ft. bgs)	83
Riser pipe length (ft)	108
Screen length (ft)	10
Screen slot size (in)	0.010
Depth to water (ft. bgs)	
Depth to bedrock (ft. bgs)	

Designed by: Dick Walker
Affiliation: USGS

REMARKS:

NW Walker 12/14/00

NOT TO SCALE

Depths – (feet below ground surface)

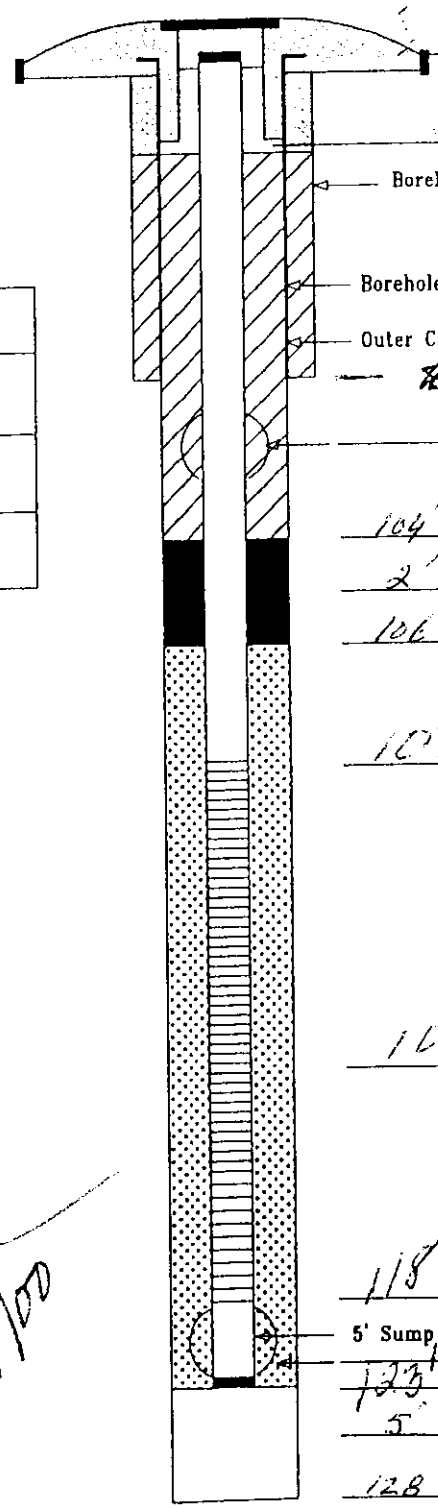

GROUND SURFACE
Sand
Borehole Diameter (in.) = 12
Borehole Diameter (in.) = 8
Outer Casing Type = 8" Steel
83'
Centralizer
104' Top of Seal
2' Total Seal Interval
106' Top of Sand
108 Top of Screen
10 Total Screen Interval
118 Bottom of Screen
5' Sump 123
Centralizer
123' Bottom of Well
5' Backfill Interval
128' Bottom of Borehole

DOUBLE-FORM PUCHACK.CP1 FEDERAL.CDT 6/28/00

DWR-138 M
11/96

New Jersey Department of Environmental Protection
Bureau of Water Allocation

MONITORING WELL RECORD

Well Permit No. 31 - 59368

Atlas Sheet Coordinates 31 02 276

OWNER IDENTIFICATION - Owner PENNSAUKEN, TWP. OF
Address 5605 CRESCENT BLVD.
City PENNSAUKEN State NJ Zip Code

WELL LOCATION - If not the same as owner please give address. Owner's Well No. MW 23M
County CAMDEN Municipality PENNSAUKEN TWP Lot No. 3 Block No. 1102
Address SHERMAN AVENUE LANE

DATE WELL STARTED 1/02/01
DATE WELL COMPETED 1/04/01

TYPE OF WELL (as per Well Permit Categories) MONITORING
Regulatory Program Requiring Well Case I.D.#

CONSULTING FIRM/FIELD SUPERVISOR (if applicable) COM Federal Programs Tele. # 212-785-9123

WELL CONSTRUCTION

Total depth drilled 128 ft.
Well finished to 123 ft.

Borehole diameter:
Top 12 in.
Bottom 8 in.

Well was finished: ☐ above grade ☒ flush mounted

If finished above grade, casing height (stick up) above land surface ____ ft.

Was steel protective casing installed? ☒ Yes ☐ No

Static water level after drilling 64.01 ft.

Water level was measured using M Scope

Well was developed for 4 hours at 25 gpm

Method of development Submersible

Was permanent pumping equipment installed? ☐ Yes ☒ No

Pump capacity NA gpm

Pump type: NA

Drilling Fluid Bentonite Type of Rig Failing 1500

Health and Safety Plan submitted? ☒ Yes ☐ No

Level of Protection used on site (circle one) None (D) C B A

Note: Measure all depths from land surface	Depth to Top (ft.)	Depth to Bottom (ft.)	Diameter (inches)	Material	Wgt./Rating (lbs/sch no.)
Single/Inner Casing	0	108	4"	PVC	Sch 40
Middle Casing (for triple cased wells only)					
Outer Casing (largest diameter)	0	83	8"	Steel	Sch 40
Open Hole or Screen (No. Used .010)	108	118	4"	PVC	Sch 40
Blank Casings (No. Used)					
Tail Piece					
Gravel Pack	104	128	8	#1 sand	
Grout	0 0	83 104		Neat Cement Bentonite	125 lbs. 75 lbs.

Grouting Method Pressure, Tremie
Drilling Method Mud Rotary

GEOLOGIC LOG

Note each depth where water was encountered in consolidated formations.

0-15 Yellow Sand
15-80 Sand and clay lenses
80-120' white & red clay
120'-128' white sand

I certify that I have constructed the above referenced well in accordance with all well permit requirements and applicable State rules and regulations.

Drilling Company UNI-TECH DRILLING
Well Driller (Print) Karl Hitzelberger
Driller's Signature Karl Hitzelberger
Registration No. M1530 Date 7/6/01

COPIES: White - DEP Canary - Driller Pink - Owner Goldenrod - Health Dept.

THIS FORM MUST BE COMPLETED BY THE PERMITTEE OR HIS/HER AGENT

GROUND WATER MONITORING WELL CERTIFICATION - FORM B - LOCATION CERTIFICATION

Name of Permittee: U.S. Environmental Protection Agency
Name of Facility: Puchack Well Field Superfund Site
Location: Pennsauken Township, New Jersey
NJPDES Number:

LAND SURVEYOR'S CERTIFICATION

Well Permit Number (As assigned by NJDEP's Bureau of Water Allocation): 31-59368-
This number must be permanently affixed to the well casing.
Datum: NAD 1983 Horizontal - NGVD 1929 Vertical
Longitude (one-tenth of a second): West 75° 03' 30.9"
Latitude (one-tenth of a second): North 39° 58' 22.7"

North 415560.8'
East 335584.3'

Elevation of Top of Casing (cap off) (one-hundredth of a foot): WC = 54.14' IC = 53.84' GR= 54.16'
Owners Well Number (As shown on application or plans): MW-23M

BENCHMARK - NGS Monument "D 100" **ELEVATION** - 44.55'
GEOGRAPHIC POSITION - North 39° 58' 25"
West 75° 03' 37"
DATE OF SURVEY - June, 2001

AUTHENTICATION

I certify under penalty of law that I have personally examined and am familiar with the information submitted in this document and all attachments and that, based on my inquiry of those individuals immediately responsible for obtaining the information, I believe the submitted information is true, accurate and complete. I am aware that there are significant penalties for submitting false information including the possibility of fine and imprisonment.

Paul J Emilius Jr.

PROFESSIONAL LAND SURVEYOR'S SIGNATURE

Paul J. Emilius, Jr.
PROFESSIONAL LAND SURVEYOR'S NAME
(Please print or type)

SEAL

New Jersey P.L.S. License No. 37186
PROFESSIONAL LAND SURVEYOR'S LICENSE #

The Department reserves the right in cases of violation of permit specified ground water limits or Ground Water Q Standards (N.J.A.C. 7:9-6.1 et seq.) to require that wells be resurveyed to an accuracy of one-hundredth of a second latitude and longitude. This shall not be considered to be a major modification of the N.J.P.D.E.S. permit.

formb.doc

Double-Cased Monitoring Well

CDM Federal Programs Corporation

Client:	U.S. Environmental Protection Agency
Site Name:	Puchack Well Field (3220-002)
Project Location:	Pennsauken, New Jersey
Drilling Contractor:	Uni-Tech Drilling Co.
Drill Rig:	Failing 1500
Drilling Method:	Mud Rotary

Well No.:	MW 24 I
Location:	Mercer Site
Drilling Date(s):	10/23/00-10/26/00
Initial Water Level (ft. bgs):	
Geologist:	L. Campbell
North:	East: Elevation (ft.amsl):
Depth to Bottom (ft. bgs):	172'

Annular Space Details

Type of Surface Seal:

Type of Annular Grout: Portland type II cement bentonite

Type of Seal: Filter Pro # 00 Sand

Type of Filter Pack: Filter Pro #1 sand

Type of Backfill: Filter Pro #1 Sand

Well Construction Materials

	Diameter	Type of Material
Screen	4"	Sch 40 PVC
Riser Casing	4"	Sch 40 PVC
Flush Mount Type		

Measurements

Outer Casing Depth (ft. bgs)	130'
Riser pipe length (ft)	167
Screen length (ft)	5'
Screen slot size (in)	0.010
Depth to water (ft. bgs)	
Depth to bedrock (ft. bgs)	

Designed by:

Affiliation:

REMARKS:

[signature] 10/25/00

NOT TO SCALE

Depths - (feet below ground surface)

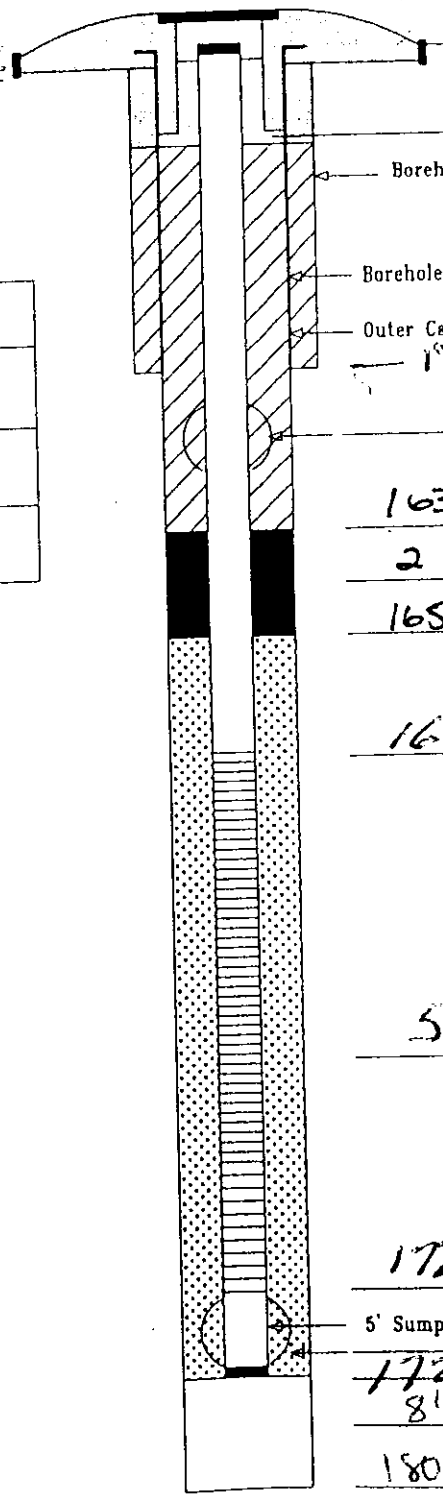

DOUBLE-FORM PUCHACK.GPJ FEDERAL.GDT 6/28/00

DWR-138 M
11/96

New Jersey Department of Environmental Protection
Bureau of Water Allocation

MONITORING WELL RECORD

Well Permit No. 51 59204

Atlas Sheet Coordinates 31 07 289

OWNER IDENTIFICATION - Owner WORLD HARVEST CHRISTIAN
Address 7201 WESTFIELD AVENUE State NJ Zip Code
City PENNSAUKEN

WELL LOCATION - If not the same as owner please give address. Owner's Well No. MW24I
County CAMDEN Municipality PENNSAUKEN TWP Lot No. 44 Block No. 1104
Address 7201 WESTFIELD AVENUE
DATE WELL STARTED 10/23/00
DATE WELL COMPETED 10/26/00

TYPE OF WELL (as per Well Permit Categories) MONITORING
Regulatory Program Requiring Well Case I.D.#

CONSULTING FIRM/FIELD SUPERVISOR (if applicable) CDM Federal Programs Tele. # 212-785-9123

WELL CONSTRUCTION

Total depth drilled 180 ft.
Well finished to 172 ft.

Borehole diameter:
Top 12 in.
Bottom 8 in.

Well was finished: [X] above grade
[ ] flush mounted

If finished above grade, casing height (stick up) above land surface 1.84 ft.

Was steel protective casing installed?
[X] Yes [ ] No

Static water level after drilling 68.17 ft.

Water level was measured using M Scope

Well was developed for 4 hours
at 25 gpm

Method of development Submersible

Was permanent pumping equipment installed? [ ] Yes [X] No

Pump capacity NA gpm

Pump type: NA

Drilling Fluid Bentonite Type of Rig Failing 1500

Health and Safety Plan submitted? [X] Yes [ ] No

Level of Protection used on site (circle one) None D C B A

Note: Measure all depths from land surface	Depth to Top (ft.)	Depth to Bottom (ft.)	Diameter (inches)	Material	Wgt./Rating (lbs/sch no.)
Single/Inner Casing	+1.84	167	4"	PVC	Sch 40
Middle Casing (for triple cased wells only)					
Outer Casing (largest diameter)	0	130	8"	Steel	Sch 40
Open Hole or Screen (No. Used .010)	167	172	4"	PVC	Sch 40
Blank Casings (No. Used)					
Tail Piece					
Gravel Pack	163	180		#1 Morie	
Grout	0 0	130 163		Neat Cement Bentonite	1050 lbs. 275 lbs.

Grouting Method Pressure Tremie
Drilling Method MUD Rotary

GEOLOGIC LOG

Note each depth where water was encountered in consolidated formations.

0-28 CMF sand yellow w/ small layers of clay
28-45 Red clay
45-132 FMC Sand w/ clay layers
132-180 Coarse sand and large gravel

I certify that I have constructed the above referenced well in accordance with all well permit requirements and applicable State rules and regulations.

Drilling Company UNI-TECH DRILLING
Well Driller (Print) Karl Hilzelberger
Driller's Signature Karl Hilzelberger
Registration No. M1530 Date 11/6/01

COPIES: White - DEP Canary - Driller Pink - Owner Goldenrod - Health Dept.

THIS FORM MUST BE COMPLETED BY THE PERMITTEE OR HIS/HER AGENT

GROUND WATER MONITORING WELL CERTIFICATION - FORM B - LOCATION CERTIFICATION

Name of Permittee: U.S. Environmental Protection Agency
Name of Facility: Puchack Well Field Superfund Site
Location: Pennsauken Township, New Jersey
NJPDES Number:

LAND SURVEYOR'S CERTIFICATION

Well Permit Number (As assigned by NJDEP's Bureau of Water Allocation): 31-59204-
This number must be permanently affixed to the well casing.
Datum: NAD 1983 Horizontal - NGVD 1929 Vertical
Longitude (one-tenth of a second): West 75° 03' 00.3"
Latitude (one-tenth of a second): North 39° 58' 10.5"

North 414306.6'
East 337958.1'

Elevation of Top of Casing (cap off) (one-hundredth of a foot): WC = 57.46' IC = 56.54' GR= 55.34'
Owners Well Number (As shown on application or plans): MW-24I

BENCHMARK - NGS Monument "D 100"
GEOGRAPHIC POSITION - North 39° 58' 25"
West 75° 03' 37"
DATE OF SURVEY - June, 2001

ELEVATION - 44.55'

AUTHENTICATION

I certify under penalty of law that I have personally examined and am familiar with the information submitted in this document and all attachments and that, based on my inquiry of those individuals immediately responsible for obtaining the information, I believe the submitted information is true, accurate and complete. I am aware that there are significant penalties for submitting false information including the possibility of fine and imprisonment.

Paul J Emilius Jr.

PROFESSIONAL LAND SURVEYOR'S SIGNATURE

Paul J. Emilius, Jr.
PROFESSIONAL LAND SURVEYOR'S NAME
(Please print or type)

SEAL

New Jersey P.L.S. License No. 37186
PROFESSIONAL LAND SURVEYOR'S LICENSE #

The Department reserves the right in cases of violation of permit specified ground water limits or Ground Water Quality Standards (N.J.A.C. 7:9-6.1 et seq.) to require that wells be resurveyed to an accuracy of one-hundredth of a second latitude and longitude. This shall not be considered to be a major modification of the N.J.P.D.E.S. permit.

Single ~~Double~~-Cased Monitoring Well

CDM Federal Programs Corporation

Client: U.S. Environmental Protection Agency
Site Name: Puchack Well Field (3220-002)
Project Location: Pennsauken, New Jersey
Drilling Contractor: Uni-Tech Drilling Co.
Drill Rig: Failing CF1500
Drilling Method: Mud Rotary

Well No.: MW-24M
Location: World Harvest Christian Center Church property
Drilling Date(s): 10/27/01
Initial Water Level (ft. bgs):
Geologist: L Campbell
North: East: Elevation (ft.amsl):
Depth to Bottom (ft. bgs): 103

Annular Space Details

Type of Surface Seal:
Type of Annular Grout: Portland Type II cement/bentonite
Type of Seal: Filter Pro # DO sand
Type of Filter Pack: Filter Pro #1 sand
Type of Backfill: natural materials (borehole collapse)

Well Construction Materials

	Diameter	Type of Material
Screen	4"	Sch 40 PVC
Riser Casing	4"	Sch 40 PVC
Flush Mount Type		

Measurements

Outer Casing Depth (ft. bgs)	—
Riser pipe length (ft)	88'
Screen length (ft)	10'
Screen slot size (in)	0.010
Depth to water (ft. bgs)	
Depth to bedrock (ft. bgs)	

Designed by:
Affiliation:

REMARKS:

R.E. Walker 10/24/00

NOT TO SCALE

Depths - (feet below ground surface)

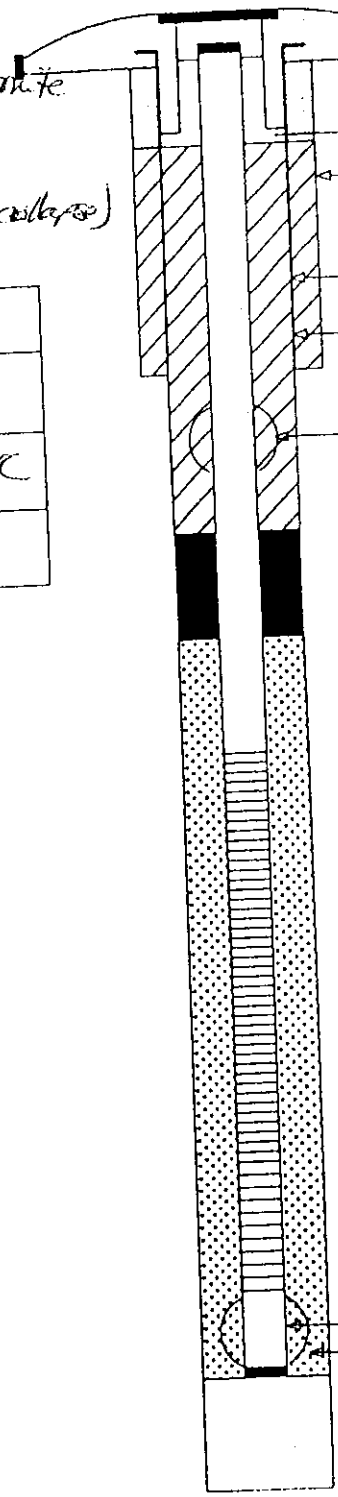

DOUBLE-FORM PUCHACK.GPJ FEDERAL.GDT 6/28/00

DWR-138 M
11/96

New Jersey Department of Environmental Protection
Bureau of Water Allocation

MONITORING WELL RECORD

Well Permit No. 31 59205

Atlas Sheet Coordinates 31 02 289

OWNER IDENTIFICATION - Owner WORLD HARVEST CHRISTIAN
Address 7201 WESTFIELD AVENUE
City PENNSAUKEN State NJ Zip Code

WELL LOCATION - If not the same as owner please give address. Owner's Well No. MW 24 M
County CAMDEN Municipality PENNSAUKEN TWP Lot No. 44 Block No. 1104
Address 7201 WESTFIELD AVENUE

DATE WELL STARTED 10/27/00
DATE WELL COMPETED 10/27/00

TYPE OF WELL (as per Well Permit Categories) MONITORING
Regulatory Program Requiring Well Case I.D.#

CONSULTING FIRM/FIELD SUPERVISOR (if applicable) CDM Federal Programs Tele. # 212 785 9123

WELL CONSTRUCTION

Total depth drilled 105 ft.
Well finished to 103 ft.

Borehole diameter: Top 8 in.
Bottom 8 in.

Well was finished: [X] above grade
[ ] flush mounted

If finished above grade, casing height (stick up) above land surface 1.15 ft.

Was steel protective casing installed? [X] Yes [ ] No

Static water level after drilling 19.81 ft.

Water level was measured using N. Sope

Well was developed for 4 hours at 25 gpm

Method of development Submersible

Was permanent pumping equipment installed? [ ] Yes [X] No

Pump capacity NA gpm

Pump type:

Drilling Fluid Bentonite Type of Rig Failing 1500

Health and Safety Plan submitted? [X] Yes [ ] No

Level of Protection used on site (circle one) None D C B A

Note: Measure all depths from land surface	Depth to Top (ft.)	Depth to Bottom (ft.)	Diameter (inches)	Material	Wgt./Rating (lbs/sch no.)
Single/Inner Casing	+1.15	88'	4"	PVC	Sch 40
Middle Casing (for triple cased wells only)					
Outer Casing (largest diameter)					
Open Hole or Screen (No. Used .010)	88	98	4"	PVC	Sch 40
Blank Casings (No. Used)					
Tail Piece					
Gravel Pack	83	105	8	#1 Sand	
Grout	0	83		Neat Cement Bentonite	2000 lbs. 100 lbs.

Grouting Method Pressure Tremie
Drilling Method Mud Rotary

GEOLOGIC LOG

Note each depth where water was encountered in consolidated formations.

0-50 cmf-sand yellow
50-70 Red clay
70-105 Course sand and large gravel

I certify that I have constructed the above referenced well in accordance with all well permit requirements and applicable State rules and regulations.

Drilling Company UNI-TECH DRILLING
Well Driller (Print) Karl Hitzelberger
Driller's Signature Karl Hitzelberger
Registration No. M1530 Date 7/6/01

COPIES: White - DEP Canary - Driller Pink - Owner Goldenrod - Health Dept.

THIS FORM MUST BE COMPLETED BY THE PERMITTEE OR HIS/HER AGENT

GROUND WATER MONITORING WELL CERTIFICATION - FORM B - LOCATION CERTIFICATION

Name of Permittee: U.S. Environmental Protection Agency
Name of Facility: Puchack Well Field Superfund Site
Location: Pennsauken Township, New Jersey
NJPDES Number:

LAND SURVEYOR'S CERTIFICATION

Well Permit Number (As assigned by NJDEP's Bureau of Water Allocation): 31-59205-
This number must be permanently affixed to the well casing.
Datum: NAD 1983 Horizontal - NGVD 1929 Vertical
Longitude (one-tenth of a second): West 75° 03' 00.4"
Latitude (one-tenth of a second): North 39° 58' 10.5"

North 414311.9'
East 337947.3'

Elevation of Top of Casing (cap off) (one-hundredth of a foot): WC = 57.25' IC = 57.01' GR= 55.16'
Owners Well Number (As shown on application or plans): MW-24M

BENCHMARK - NGS Monument "D 100"
GEOGRAPHIC POSITION - North 39° 58' 25"
West 75° 03' 37"
DATE OF SURVEY - June, 2001

ELEVATION - 44.55'

AUTHENTICATION

I certify under penalty of law that I have personally examined and am familiar with the information submitted in this document and all attachments and that, based on my inquiry of those individuals immediately responsible for obtaining the information, I believe the submitted information is true, accurate and complete. I am aware that there are significant penalties for submitting false information including the possibility of fine and imprisonment.

Paul J Emilius Jr.

PROFESSIONAL LAND SURVEYOR'S SIGNATURE

Paul J. Emilius, Jr.
PROFESSIONAL LAND SURVEYOR'S NAME
(Please print or type)

SEAL

New Jersey P.L.S. License No. 37186
PROFESSIONAL LAND SURVEYOR'S LICENSE #

The Department reserves the right in cases of violation of permit specified ground water limits or Ground Water Qu Standards (N.J.A.C. 7:9-6.1 et seq.) to require that wells be resurveyed to an accuracy of one-hundredth of a second latitude and longitude. This shall not be considered to be a major modification of the N.J.P.D.E.S. permit.

formb.doc

CDM Federal Programs Corporation

Double-Cased Monitoring Well

Client:	U.S. Environmental Protection Agency	Well No.:	MW 25D
Site Name:	Puchack Well Field (3220-002)	Location:	Parkland
Project Location:	Pennsauken, New Jersey	Drilling Date(s):	9/8/00 – 9/12-13/00
Drilling Contractor:	Uni-Tech Drilling Co.	Initial Water Level (ft. bgs):	
Drill Rig:	Failing CF 1500	Geologist:	L Campbell
Drilling Method:	Mud Rotary	North: East: Elevation (ft.amsl):	
		Depth to Bottom (ft. bgs):	215

Annular Space Details

Type of Surface Seal: Portland Type II cement/

Type of Annular Grout: ~~powder~~ bentonite ~~cement~~

Type of Seal: FilterPro # 00 sand

Type of Filter Pack: FilterPro #1 sand

Type of Backfill: ~~NA~~ FilterPro #1 sand

Well Construction Materials

	Diameter	Type of Material
Screen	4"	Schedule 40 PVC ~~0.010 slot~~
Riser Casing	4"	Schedule 40 PVC
Flush Mount Type		

Measurements

Outer Casing Depth (ft. bgs)	172'
Riser pipe length (ft)	205
Screen length (ft)	10'
Screen slot size (in)	0.010
Depth to water (ft. bgs)	
Depth to bedrock (ft. bgs)	NA

Designed by: Dick Walker

Affiliation: USGS

REMARKS: R L Walker 9/12/00

NOT TO SCALE

* Depending on Conditions

Depths – (feet below ground surface)

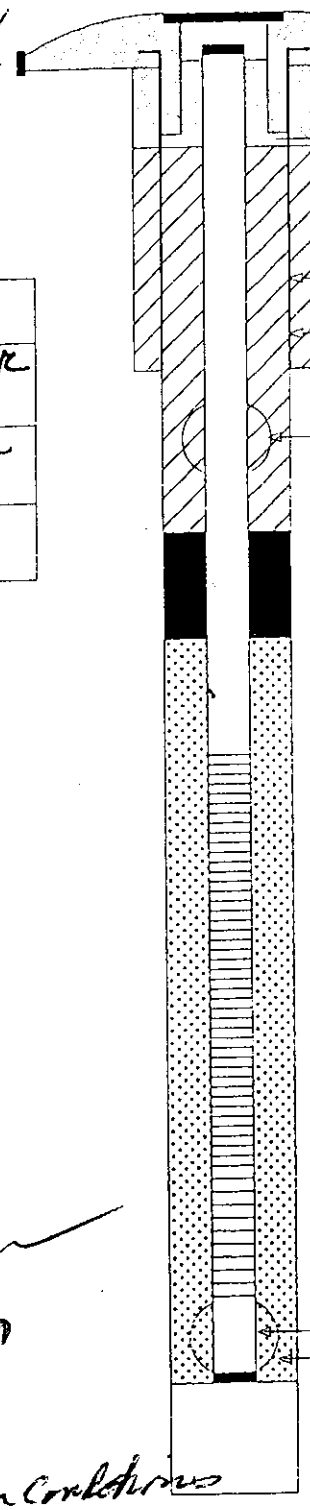

GROUND SURFACE

Sand 12

Borehole Diameter (in.) = ~~13~~

Borehole Diameter (in.) = 8

Outer Casing Type = 6" Steel

172'

Centralizer

200 Top of Seal

3' Total Seal Interval

~~202~~ 203 Top of Sand

205 Top of Screen

10 Total Screen Interval

215 Bottom of Screen

5' Sump optional* NO SUMP

Centralizer

~~219~~ 215 Bottom of Well

~~4'~~ Backfill Interval

219 Bottom of Borehole

DOUBLE-FORM PUCHACK.GPJ FEDERAL.GDT 6/28/00

DWR-138 M
11/98

New Jersey Department of Environmental Protection
Bureau of Water Allocation

MONITORING WELL RECORD

Well Permit No. 31 - 58573

Atlas Sheet Coordinates 31 : 02 204

OWNER IDENTIFICATION - Owner PENNSAUKEN TOWNSHIP
Address 5605 N. CRESCENT BLVD.
City PENNSAUKEN State NJ Zip Code

WELL LOCATION - If not the same as owner please give address. Owner's Well No. MW 25D
County CAMDEN Municipality PENNSAUKEN TWP Lot No. N/A Block No. N/A
Address BOULEVARD AVE.
DATE WELL STARTED 9 / 8 / 00
DATE WELL COMPLETED 9 / 13 / 00

TYPE OF WELL (as per Well Permit Categories) MONITORING
Regulatory Program Requiring Well Case I.D.#

CONSULTING FIRM/FIELD SUPERVISOR (if applicable) CDIM Federal Programs Tele. # 212-785-9123

WELL CONSTRUCTION

Total depth drilled 229 ft.
Well finished to 215 ft.

Borehole diameter:
Top 13 in.
Bottom 8 in.

Well was finished: ☐ above grade
☒ flush mounted

If finished above grade, casing height (stick up) above land surface ____ ft.

Was steel protective casing installed?
☒ Yes ☐ No

Static water level after drilling 57 ft.

Water level was measured using WLI

Well was developed for 7 hours
at 10 gpm

Method of development Airlift / Submersible

Was permanent pumping equipment installed? ☐ Yes ☒ No

Pump capacity N/A gpm

Pump type: N/A

Drilling Fluid Bentonite Type of Rig CF-1500

Health and Safety Plan submitted? ☒ Yes ☐ No

Level of Protection used on site (circle one) None (D) C B A

Note: Measure all depths from land surface	Depth to Top (ft.)	Depth to Bottom (ft.)	Diameter (inches)	Material	Wgt./Rating (lbs/sch no.)
Single/Inner Casing	0	205	4	PVC	40
Middle Casing (for triple cased wells only)					
Outer Casing (largest diameter)	0	172	8	Steel	8/10 28#/Ft
Open Hole or Screen (No. Used)	205	215	4	PVC	40
Blank Casings (No. Used)					
Tail Piece					
Gravel Pack	200	217	4	#1	800 #
Grout	0	172	13	Neat Cement	14000 lbs.
	0	200	8	Bentonite	____ lbs.

Grouting Method Pressure Tremie
Drilling Method Mud Rotary

GEOLOGIC LOG

Note each depth where water was encountered in consolidated formations.

0 - 15' Yellow sand
15 - 20' Clay white
20 - 80' Sand + clay lenses
80 - 97' Sand C M F
97' - 140' White + red clay
140' - 205' white sand w/ clay lenses
205' - 225' Coarse gravel + sand

I certify that I have constructed the above referenced well in accordance with all well permit requirements and applicable State rules and regulations.

Drilling Company UNI-TECH DRILLING
Well Driller (Print) Karl Hitzelberger
Driller's Signature Karl Hitzelberger
Registration No. M1530 Date 7/6/01

COPIES: White - DEP Canary - Driller Pink - Owner Goldenrod - Health Dept.

THIS FORM MUST BE COMPLETED BY THE PERMITTEE OR HIS/HER AGENT

GROUND WATER MONITORING WELL CERTIFICATION - FORM B - LOCATION CERTIFICATION

Name of Permittee: U.S. Environmental Protection Agency
Name of Facility: Puchack Well Field Superfund Site
Location: Pennsauken Township, New Jersey
NJPDES Number:

LAND SURVEYOR'S CERTIFICATION

Well Permit Number (As assigned by NJDEP's Bureau of Water Allocation): 31-58573-
This number must be permanently affixed to the well casing.
Datum: NAD 1983 Horizontal - NGVD 1929 Vertical
Longitude (one-tenth of a second): West 75° 03' 00.9"
Latitude (one-tenth of a second): North 39° 58' 15.3"

North 414796.0'
East 337911.2'

Elevation of Top of Casing (cap off) (one-hundredth of a foot): WC = 42.64' IC = 42.23' GR= 42.63'
Owners Well Number (As shown on application or plans): MW-25D

BENCHMARK - NGS Monument "D 100"
GEOGRAPHIC POSITION - North 39° 58' 25"
West 75° 03' 37"
DATE OF SURVEY - June, 2001

ELEVATION - 44.55'

AUTHENTICATION

I certify under penalty of law that I have personally examined and am familiar with the information submitted in this document and all attachments and that, based on my inquiry of those individuals immediately responsible for obtaining the information, I believe the submitted information is true, accurate and complete. I am aware that there are significant penalties for submitting false information including the possibility of fine and imprisonment.

Paul J Emilius Jr.

PROFESSIONAL LAND SURVEYOR'S SIGNATURE

Paul J. Emilius, Jr.
PROFESSIONAL LAND SURVEYOR'S NAME
(Please print or type)

SEAL

New Jersey P.L.S. License No. 37186
PROFESSIONAL LAND SURVEYOR'S LICENSE #

The Department reserves the right in cases of violation of permit specified ground water limits or Ground Water Q Standards (N.J.A.C. 7:9-6.1 et seq.) to require that wells be resurveyed to an accuracy of one-hundredth of a second lat and longitude. This shall not be considered to be a major modification of the N.J.P.D.E.S. permit.

formb.doc

CDM Federal Programs Corporation

Double-Cased Monitoring Well

Client: U.S. Environmental Protection Agency
Site Name: Puchack Well Field (3220-002)
Project Location: Pennsauken, New Jersey
Drilling Contractor: Uni-Tech Drilling Co.
Drill Rig: Failing CF1500
Drilling Method: Mud Rotary

Well No.: MW 25 I
Location: Borehard
Drilling Date(s): 9.14.00 – 9.19.00
Initial Water Level (ft. bgs):
Geologist: L Campbell
North: East: Elevation (ft.amsl):
Depth to Bottom (ft. bgs): ~~155~~ 154

Annular Space Details

Type of Surface Seal:
Type of Annular Grout: Portland Type II ~~+ power~~ cement ~~+ powder bentonite grout~~
Type of Seal: Filter Pro #00 sand
Type of Filter Pack: Filter Pro #1 sand
Type of Backfill: ~~NA~~ Filter Pro #1 sand

Well Construction Materials

	Diameter	Type of Material
Screen	4"	Schedule 40 PVC
Riser Casing	4"	Schedule 40 PVC
Flush Mount Type		

Measurements

Outer Casing Depth (ft. bgs)	105
Riser pipe length (ft)	144'
Screen length (ft)	10'
Screen slot size (in)	0.010
Depth to water (ft. bgs)	
Depth to bedrock (ft. bgs)	NA

Designed by: Dick Walker
Affiliation: USGS
REMARKS: [illegible] 9/12/00

NOT TO SCALE

Depths – (feet below ground surface)

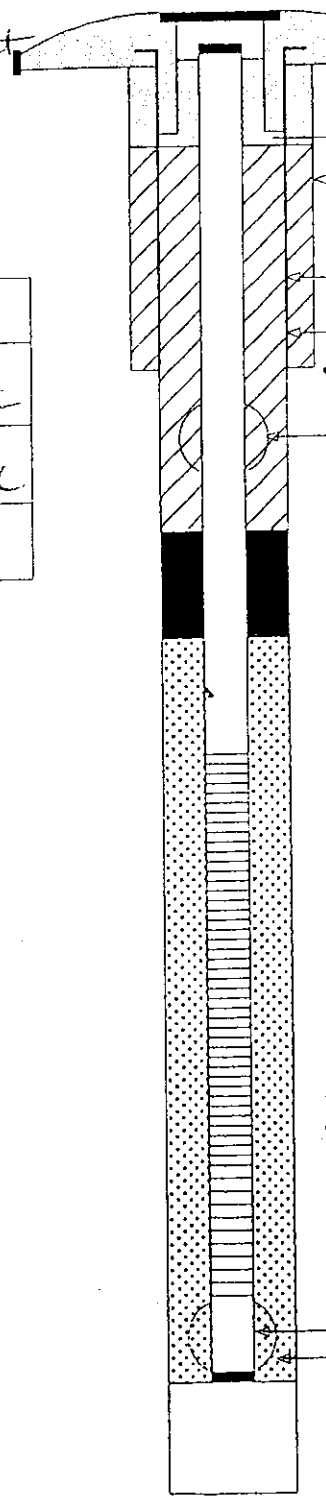

GROUND SURFACE
Sand 12
Borehole Diameter (in.) = ~~13~~
Borehole Diameter (in.) = 8
Outer Casing Type = 8" Steel
105'
Centralizer
139 Top of Seal
3' Total Seal Interval
142 Top of Sand
144 Top of Screen
10' ~~154~~ Total Screen Interval
154 Bottom of Screen
5' Sump None
Centralizer
154 Bottom of Well
1' Backfill Interval
155 Bottom of Borehole

DOUBLE-FORM PUCHACK.GPJ FEDERAL.GDT 6/28/00

THIS FORM MUST BE COMPLETED BY THE PERMITTEE OR HIS/HER AGENT

GROUND WATER MONITORING WELL CERTIFICATION - FORM B - LOCATION CERTIFICATION

Name of Permittee: U.S. Environmental Protection Agency
Name of Facility: Puchack Well Field Superfund Site
Location: Pennsauken Township, New Jersey
NJPDES Number:

LAND SURVEYOR'S CERTIFICATION

Well Permit Number (As assigned by NJDEP's Bureau of Water Allocation): 31-58574-
This number must be permanently affixed to the well casing.
Datum: NAD 1983 Horizontal - NGVD 1929 Vertical
Longitude (one-tenth of a second): West 75° 03' 01.1"
Latitude (one-tenth of a second): North 39° 58' 15.3"

North 414799.8'
East 337901.8'

Elevation of Top of Casing (cap off) (one-hundredth of a foot): WC = 42.57' IC = 42.22' GR= 42.57'
Owners Well Number (As shown on application or plans): MW-25I

BENCHMARK - NGS Monument "D 100"
GEOGRAPHIC POSITION - North 39° 58' 25"
West 75° 03' 37"
DATE OF SURVEY - June, 2001

ELEVATION - 44.55'

AUTHENTICATION

I certify under penalty of law that I have personally examined and am familiar with the information submitted in this document and all attachments and that, based on my inquiry of those individuals immediately responsible for obtaining the information, I believe the submitted information is true, accurate and complete. I am aware that there are significant penalties for submitting false information including the possibility of fine and imprisonment.

Paul J Emilius Jr.

PROFESSIONAL LAND SURVEYOR'S SIGNATURE

Paul J. Emilius, Jr.
PROFESSIONAL LAND SURVEYOR'S NAME
(Please print or type)

SEAL

New Jersey P.L.S. License No. 37186
PROFESSIONAL LAND SURVEYOR'S LICENSE #

The Department reserves the right in cases of violation of permit specified ground water limits or Ground Water Qu Standards (N.J.A.C. 7:9-6.1 et seq.) to require that wells be resurveyed to an accuracy of one-hundredth of a second lat. and longitude. This shall not be considered to be a major modification of the N.J.P.D.E.S. permit.

formb.doc

CDM Federal Programs Corporation

~~Double~~ Single Cased Monitoring Well

Client:	U.S. Environmental Protection Agency	Well No.:	MW-25M
Site Name:	Puchack Well Field (3220-002)	Location:	Bankward
Project Location:	Pennsauken, New Jersey	Drilling Date(s):	9/20/00
Drilling Contractor:	Uni-Tech Drilling Co.	Initial Water Level (ft. bgs):	
Drill Rig:	Failing CF1500	Geologist:	L. Campbell
Drilling Method:	Mud Rotary	North: East:	Elevation (ft.amsl):
		Depth to Bottom (ft. bgs):	97 ~~95~~

Annular Space Details

Type of Surface Seal:

Type of Annular Grout: Portland Type II cement & ~~powder~~ bentonite grout

Type of Seal: FilterPro #00 Sand

Type of Filter Pack: Filter Pro #1 Sand

Type of Backfill: NA

Well Construction Materials

	Diameter	Type of Material
Screen	4"	Schedule 40 PVC
Riser Casing	4"	Schedule 40 PVC
Flush Mount Type		

Measurements

Outer Casing Depth (ft. bgs)	NA
Riser pipe length (ft)	80'
Screen length (ft)	10'
Screen slot size (in)	0.010
Depth to water (ft. bgs)	
Depth to bedrock (ft. bgs)	NA

Designed by: Dick Walker

Affiliation: USGS

REMARKS: R. Walker 9/12/00

NOT TO SCALE

Depths – (feet below ground surface)

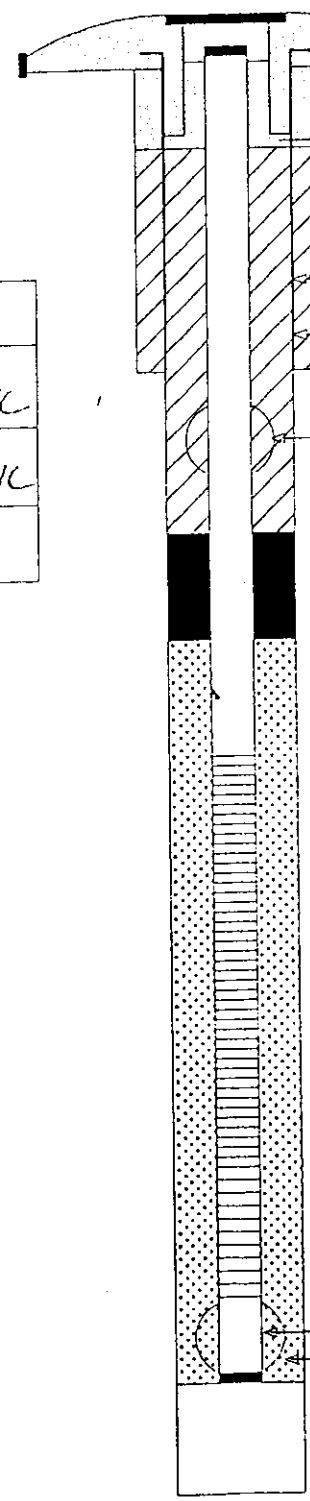

GROUND SURFACE

Sand

Borehole Diameter (in.)= NA

Borehole Diameter (in.) = 8"

Outer Casing Type = None

Centralizer

75 Top of Seal

3 Total Seal Interval

78 Top of Sand

80 ~~85~~ Top of Screen

10 Total Screen Interval

90 ~~95~~ Bottom of Screen

5' Sump

Centralizer

95 ~~100~~ Bottom of Well

2' Backfill Interval

97 Bottom of Borehole

DOUBLE-FORM PUCHACK.GPJ FEDERAL.GDT 8/28/00

DWR-138 M
11/98

New Jersey Department of Environmental Protection
Bureau of Water Allocation

MONITORING WELL RECORD

Well Permit No. 31 - 58575

Atlas Sheet Coordinates 31 : 02 : 264

OWNER IDENTIFICATION - Owner PENNSAUKEN TOWNSHIP
Address 5605 N. CRESCENT BLVD.
City PENNSAUKEN State NJ Zip Code

WELL LOCATION - If not the same as owner please give address. Owner's Well No. MW 25 M
County CAMDEN Municipality PENNSAUKEN TWP Lot No. N/A Block No. N/A
Address BOULEVARD AVE.

DATE WELL STARTED 8/25/00
DATE WELL COMPLETED 8/26/00

TYPE OF WELL (as per Well Permit Categories) MONITORING
Regulatory Program Requiring Well Case I.D.#

CONSULTING FIRM/FIELD SUPERVISOR (if applicable) CDM Federal Programs Tele. # 212-785-9123

WELL CONSTRUCTION

Total depth drilled 97 ft.
Well finished to 95 ft.

Borehole diameter:
Top 8 in.
Bottom 8 in.

Well was finished: ☐ above grade ☒ flush mounted

If finished above grade, casing height (stick up) above land surface ____ ft.

Was steel protective casing installed? ☒ Yes ☐ No

Static water level after drilling 57.5 ft.

Water level was measured using WLI

Well was developed for 3 hours at 5 gpm

Method of development Submersible

Was permanent pumping equipment installed? ☐ Yes ☒ No

Pump capacity N/A gpm

Pump type: N/A

Drilling Fluid Bentonite Type of Rig CF-150

Health and Safety Plan submitted? ☒ Yes ☐ No

Level of Protection used on site (circle one) None (D) C B A

Note: Measure all depths from land surface	Depth to Top (ft.)	Depth to Bottom (ft.)	Diameter (inches)	Material	Wgt./Rating (lbs/sch no.)
Single/Inner Casing	0	80	4	PVC	40
Middle Casing (for triple cased wells only)					
Outer Casing (largest diameter)					
Open Hole or Screen (No. Used)	80	90	4	PVC	40
Blank Casings (No. Used)					
Tail Piece	90	95	4	PVC	40
Gravel Pack	75	97	8	#1	800#
Grout	0	75	8	Neat Cement Bentonite	1600 lbs. 80 lbs.

Grouting Method Pressure Tremie
Drilling Method Mud Rotary

GEOLOGIC LOG

Note each depth where water was encountered in consolidated formations.

0-15' Yellow Sand
15'-20' clay white
20'-80' Sand + Clay lenses
80'-97' Coarse Sand

I certify that I have constructed the above referenced well in accordance with all well permit requirements and applicable State rules and regulations.

Drilling Company UNI-TECH DRILLING
Well Driller (Print) Karl Hitzelberger
Driller's Signature Karl Hitzelberger
Registration No. M1555 Date 7/6/01

COPIES: White - DEP Canary - Driller Pink - Owner Goldenrod - Health Dept.

THIS FORM MUST BE COMPLETED BY THE PERMITTEE OR HIS/HER AGENT

GROUND WATER MONITORING WELL CERTIFICATION - FORM B - LOCATION CERTIFICATION

Name of Permittee: U.S. Environmental Protection Agency
Name of Facility: Puchack Well Field Superfund Site
Location: Pennsauken Township, New Jersey
NJPDES Number:

LAND SURVEYOR'S CERTIFICATION

Well Permit Number (As assigned by NJDEP's Bureau of Water Allocation): 31-58575-
This number must be permanently affixed to the well casing.
Datum: NAD 1983 Horizontal - NGVD 1929 Vertical
Longitude (one-tenth of a second): West 75° 03' 01.1"
Latitude (one-tenth of a second): North 39° 58' 15.4"

North 414802.8'
East 337895.8'

Elevation of Top of Casing (cap off) (one-hundredth of a foot): WC = 42.51' IC = 42.25' GR= 42.53'
Owners Well Number (As shown on application or plans): MW-25M

BENCHMARK - NGS Monument "D 100"
GEOGRAPHIC POSITION - North 39° 58' 25"
West 75° 03' 37"
DATE OF SURVEY - June, 2001

ELEVATION - 44.55'

AUTHENTICATION

I certify under penalty of law that I have personally examined and am familiar with the information submitted in this document and all attachments and that, based on my inquiry of those individuals immediately responsible for obtaining the information, I believe the submitted information is true, accurate and complete. I am aware that there are significant penalties for submitting false information including the possibility of fine and imprisonment.

Paul J Emilius Jr.

PROFESSIONAL LAND SURVEYOR'S SIGNATURE

Paul J. Emilius, Jr.
PROFESSIONAL LAND SURVEYOR'S NAME
(Please print or type)

SEAL

New Jersey P.L.S. License No. 37186
PROFESSIONAL LAND SURVEYOR'S LICENSE #

The Department reserves the right in cases of violation of permit specified ground water limits or Ground Water Qu Standards (N.J.A.C. 7:9-6.1 et seq.) to require that wells be resurveyed to an accuracy of one-hundredth of a second lat and longitude. This shall not be considered to be a major modification of the N.J.P.D.E.S. permit.

formb.doc

CDM Federal Programs Corporation

Double-Cased Monitoring Well

Client:	U.S. Environmental Protection Agency	Well No.:	MW 26 I
Site Name:	Puchack Well Field (3220-002)	Location:	Arlington Cemetery
Project Location:	Pennsauken, New Jersey	Drilling Date(s):	1/28/01 - 1/31/01
Drilling Contractor:	Uni-Tech Drilling Co.	Initial Water Level (ft. bgs):	
Drill Rig:	Failing CF 1500	Geologist:	L Campbell
Drilling Method:	Mud Rotary	North: East: Elevation (ft.amsl):	
		Depth to Bottom (ft. bgs):	129

Annular Space Details

Type of Surface Seal:

Type of Annular Grout: Portland Type II cement/bentonite

Type of Seal: Filter Pro #00 sand

Type of Filter Pack: Filter Pro #1 sand

Type of Backfill: ~~Filter Pro~~ See remarks

Well Construction Materials

	Diameter	Type of Material
Screen	4"	Sch 40 PVC
Riser Casing	4"	Sch 40 PVC
Flush Mount Type		

Measurements

Outer Casing Depth (ft. bgs)	91'
Riser pipe length (ft)	124
Screen length (ft)	5'
Screen slot size (in)	0.010
Depth to water (ft. bgs)	
Depth to bedrock (ft. bgs)	

Designed by:

Affiliation:

REMARKS: backfill: 129-140': Filter Pro #00 Sand; 140-163: Portland Type II Cement/bentonite grout

R Walker 1/29/01

NOT TO SCALE

Depths - (feet below ground surface)

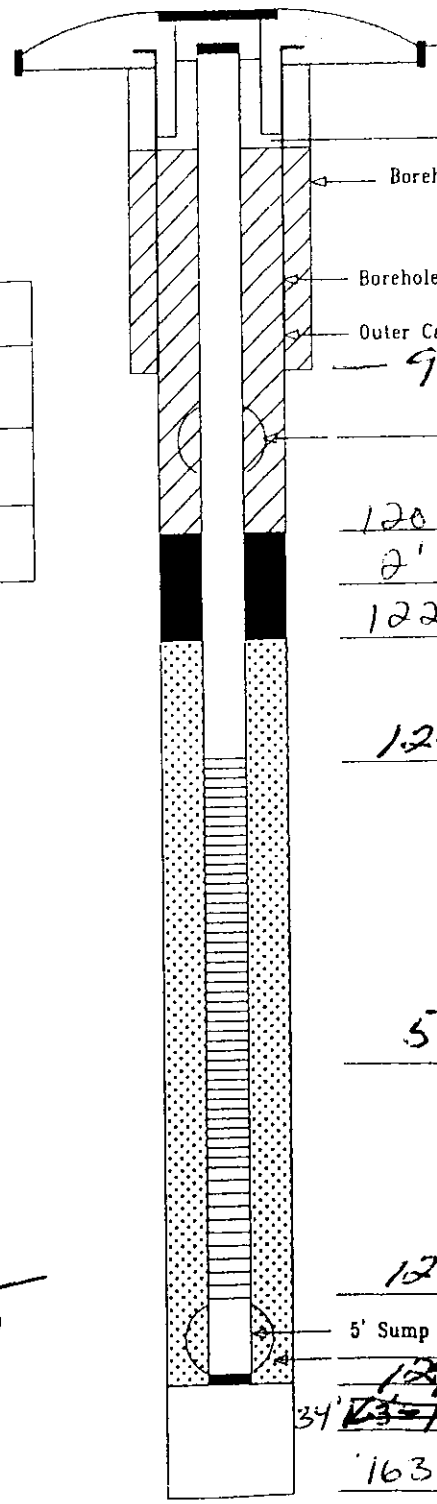

GROUND SURFACE

Sand

Borehole Diameter (in.) = 12

Borehole Diameter (in.) = 8

Outer Casing Type = 8" Steel — 91'

Centralizer

120 Top of Seal

2' Total Seal Interval

122 Top of Sand

124 Top of Screen

5 Total Screen Interval

129 Bottom of Screen

5' Sump None

Centralizer

129' Bottom of Well

34' ~~123-140~~ Backfill Interval

163 Bottom of Borehole

DOUBLE-FORM PUCHACK.GPJ FEDERAL.GDT 6/28/00

DWR-138 M
11/98

New Jersey Department of Environmental Protection
Bureau of Water Allocation

MONITORING WELL RECORD

Well Permit No. ~~31~~ ~~59894~~

Atlas Sheet Coordinates 31 02 275

OWNER IDENTIFICATION - Owner ~~ARLINGTON CEMETERY~~
Address ~~1620 COVE RD~~
City ~~PENNSAUKEN~~ State ~~NJ~~ Zip Code

WELL LOCATION - If not the same as owner please give address. Owner's Well No. MW-26I
County ~~CAMDEN~~ Municipality ~~PENNSAUKEN TWP~~ Lot No. ~~14~~ Block No. ~~1101~~
Address ~~COVE RD~~

DATE WELL STARTED 1 25 01
DATE WELL COMPLETED 1 31 01

TYPE OF WELL (as per Well Permit Categories) MONITORING Case I.D.#
Regulatory Program Requiring Well

CONSULTING FIRM/FIELD SUPERVISOR (if applicable) CDM Federal Programs Tele. # 212-785-9123

WELL CONSTRUCTION

Total depth drilled 163 ft.
Well finished to 129' ft.

Borehole diameter:
Top 12 in.
Bottom 8 in.

Well was finished: ☐ above grade ☒ flush mounted

If finished above grade, casing height (stick up) above land surface ____ ft.

Was steel protective casing installed? ☒ Yes ☐ No

Static water level after drilling 65.55 ft.

Water level was measured using M Scope

Well was developed for 4 hours at 25 gpm

Method of development Submersible

Was permanent pumping equipment installed? ☐ Yes ☒ No

Pump capacity NA gpm

Pump type: NA

Drilling Fluid Bentonite Type of Rig Failing CF1500

Health and Safety Plan submitted? ☒ Yes ☐ No

Level of Protection used on site (circle one) None (D) C B A

Note: Measure all depths from land surface	Depth to Top (ft.)	Depth to Bottom (ft.)	Diameter (inches)	Material	Wgt./Rating (lbs/sch no.)
Single/Inner Casing	0	124	4"	PVC	Sch 40
Middle Casing (for triple cased wells only)					
Outer Casing (largest diameter)	0	91	8"	Steel	Sch 40
Open Hole or Screen (No. Used 1010)	124'	129'	4"	PVC	Sch 40
Blank Casings (No. Used)					
Tail Piece					
Gravel Pack	120'	163'	8	#1 Sand	
Grout	0 0	91 120		Neat Cement Bentonite	650 lbs. 250 lbs.

Grouting Method Pressure Tremie
Drilling Method mud Rotary

I certify that I have constructed the above referenced well in accordance with all well permit requirements and applicable State rules and regulations.

Drilling Company UNI-TECH DRILLING
Well Driller (Print) Karl Hitzelberger
Driller's Signature Karl Hitzelberger
Registration No. M1530 Date 2/6/01

GEOLOGIC LOG

Note each depth where water was encountered in consolidated formations.

0-8 sandstone, sand, and gravel
8-88 F.C. brown sand w/ M-gravel
88-108 red clay
108-124 sand - chatter
124-156' F.C. reddish yellow sand
156-163' white clay

COPIES: White - DEP Canary - Driller Pink - Owner Goldenrod - Health Dept.

THIS FORM MUST BE COMPLETED BY THE PERMITTEE OR HIS/HER AGENT

GROUND WATER MONITORING WELL CERTIFICATION - FORM B - LOCATION CERTIFICATION

Name of Permittee: U.S. Environmental Protection Agency
Name of Facility: Puchack Well Field Superfund Site
Location: Pennsauken Township, New Jersey
NJPDES Number:

LAND SURVEYOR'S CERTIFICATION

Well Permit Number (As assigned by NJDEP's Bureau of Water Allocation): 31-59894-
This number must be permanently affixed to the well casing.
Datum: NAD 1983 Horizontal - NGVD 1929 Vertical
Longitude (one-tenth of a second): West 75° 03' 38.7"
Latitude (one-tenth of a second): North 39° 58' 13.2"

North 414603.4'
East 334974.7'

Elevation of Top of Casing (cap off) (one-hundredth of a foot): WC = 56.19' IC = 55.91' GR= 56.17'
Owners Well Number (As shown on application or plans): MW-26I

BENCHMARK - NGS Monument "D 100"
GEOGRAPHIC POSITION - North 39° 58' 25"
West 75° 03' 37"
DATE OF SURVEY - June, 2001

ELEVATION - 44.55'

AUTHENTICATION

I certify under penalty of law that I have personally examined and am familiar with the information submitted in this document and all attachments and that, based on my inquiry of those individuals immediately responsible for obtaining the information, I believe the submitted information is true, accurate and complete. I am aware that there are significant penalties for submitting false information including the possibility of fine and imprisonment.

Paul J Emilius Jr.

PROFESSIONAL LAND SURVEYOR'S SIGNATURE

Paul J. Emilius, Jr.
PROFESSIONAL LAND SURVEYOR'S NAME
(Please print or type)

SEAL

New Jersey P.L.S. License No. 37186
PROFESSIONAL LAND SURVEYOR'S LICENSE #

The Department reserves the right in cases of violation of permit specified ground water limits or Ground Water Qu Standards (N.J.A.C. 7:9-6.1 et seq.) to require that wells be resurveyed to an accuracy of one-hundredth of a second lat and longitude. This shall not be considered to be a major modification of the N.J.P.D.E.S. permit.

formb.doc

CDM Federal Programs Corporation

Single ~~Double~~-Cased Monitoring Well

Client:	U.S. Environmental Protection Agency	Well No.:	MW-26 M
Site Name:	Puchack Well Field (3220-002)	Location:	Arlington Cemetery
Project Location:	Pennsauken, New Jersey	Drilling Date(s):	~~1/25~~ 2/1/01
Drilling Contractor:	Uni-Tech Drilling Co.	Initial Water Level (ft. bgs):	
Drill Rig:	Failing CF-1500	Geologist:	L. Campbell
Drilling Method:	Mud Rotary	North: East:	Elevation (ft.amsl):
		Depth to Bottom (ft. bgs):	82'

Annular Space Details

Type of Surface Seal:

Type of Annular Grout: Portland Type II Cement/bentonite

Type of Seal: Filter Pro # 00 Sand

Type of Filter Pack: Filter Pro #1 Sand

Type of Backfill: Filter Pro #1 Sand

Well Construction Materials

	Diameter	Type of Material
Screen	4"	Sch 40 PVC
Riser Casing	4"	Sch 40 PVC
Flush Mount Type		

Measurements

Outer Casing Depth (ft. bgs)	—
Riser pipe length (ft)	77'
Screen length (ft)	5'
Screen slot size (in)	0.010
Depth to water (ft. bgs)	
Depth to bedrock (ft. bgs)	

Designed by:

Affiliation:

REMARKS:

RLO 1/29/01

NOT TO SCALE

Depths - (feet below ground surface)

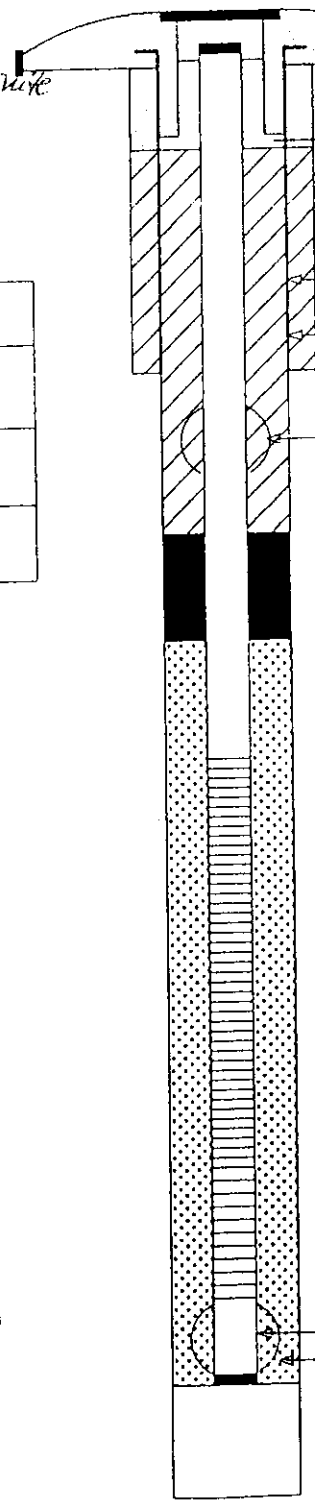

GROUND SURFACE

Sand

~~Borehole Diameter (in.)=~~

Borehole Diameter (in.) = 8"

Outer Casing Type = None

Centralizer

72' Top of Seal

~~8~~ 3' Total Seal Interval

75 Top of Sand

77' Top of Screen

5' Total Screen Interval

82' Bottom of Screen

5' Sump None

Centralizer

82 Bottom of Well

3' Backfill Interval

85' Bottom of Borehole

DOUBLE-FORM PUCHACK.GPJ FEDERAL.GDT 8/28/00

DWR-138 M
11/98

New Jersey Department of Environmental Protection
Bureau of Water Allocation

MONITORING WELL RECORD

Well Permit No. 31 - 57895

Atlas Sheet Coordinates 31 02 275

OWNER IDENTIFICATION - Owner ARLINGTON CEMETERY
Address 1620 COVE RD
City PENNSAUKEN State NJ Zip Code

WELL LOCATION - If not the same as owner please give address. Owner's Well No. MW-26M
County CAMDEN Municipality PENNSAUKEN TWP Lot No. 14 Block No. 1101
Address COVE RD

DATE WELL STARTED / /
DATE WELL COMPLETED 2 / 1 / 01

TYPE OF WELL (as per Well Permit Categories) MONITORING
Regulatory Program Requiring Well Case I.D.#

CONSULTING FIRM/FIELD SUPERVISOR (if applicable) CDM Federal Programs Tele. # 212-785-9623

WELL CONSTRUCTION

Total depth drilled 85 ft.
Well finished to 82' ft.

Borehole diameter:
Top 9 in.
Bottom 4 in.

Well was finished: ☐ above grade ☒ flush mounted

If finished above grade, casing height (stick up) above land surface ____ ft.

Was steel protective casing installed? ☒ Yes ☐ No

Static water level after drilling 14.81 ft.

Water level was measured using H-Scope

Well was developed for 4 hours at 25 gpm

Method of development Airlift

Was permanent pumping equipment installed? ☐ Yes ☒ No

Pump capacity ____ gpm

Pump type: NA

Drilling Fluid Bentonite Type of Rig Failing 1500

Health and Safety Plan submitted? ☒ Yes ☐ No

Level of Protection used on site (circle one) None D C B A

Note: Measure all depths from land surface	Depth to Top (ft.)	Depth to Bottom (ft.)	Diameter (inches)	Material	Wgt./Rating (lbs/sch no.)
Single/Inner Casing	0	77'	4	PVC	Sch 40
Middle Casing (for triple cased wells only)					
Outer Casing (largest diameter)					
Open Hole or Screen (No. Used 010)	77'	82'	4	PVC	Sch 40
Blank Casings (No. Used)					
Tail Piece					
Gravel Pack	72'	85	8	#1 Sand	
Grout	0	72		Neat Cement Bentonite	250 lbs. 150 lbs.

Grouting Method pressure tremie
Drilling Method mud rotary

I certify that I have constructed the above referenced well in accordance with all well permit requirements and applicable State rules and regulations.

Drilling Company UNI TECH DRILLING
Well Driller (Print) Karl Hitzelberger
Driller's Signature Karl Hitzelberger
Registration No. M1530 Date 7/16/01

GEOLOGIC LOG

Note each depth where water was encountered in consolidated formations.

0-20 sandstone and gravel
20-60 clay
60-85' f-c brown sand w/ m-gravel

COPIES: White - DEP Canary - Driller Pink - Owner Goldenrod - Health Dept.

THIS FORM MUST BE COMPLETED BY THE PERMITTEE OR HIS/HER AGENT

GROUND WATER MONITORING WELL CERTIFICATION - FORM B - LOCATION CERTIFICATION

Name of Permittee: U.S. Environmental Protection Agency
Name of Facility: Puchack Well Field Superfund Site
Location: Pennsauken Township, New Jersey
NJPDES Number:

LAND SURVEYOR'S CERTIFICATION

Well Permit Number (As assigned by NJDEP's Bureau of Water Allocation): 31-59895-
This number must be permanently affixed to the well casing.
Datum: NAD 1983 Horizontal - NGVD 1929 Vertical
Longitude (one-tenth of a second): West 75° 03' 38.8"
Latitude (one-tenth of a second): North 39° 58' 13.3"

North 414612.6'
East 334965.8'

Elevation of Top of Casing (cap off) (one-hundredth of a foot): WC = 55.98' IC = 55.60' GR= 55.97'
Owners Well Number (As shown on application or plans): MW-26M

BENCHMARK - NGS Monument "D 100" **ELEVATION** - 44.55'
GEOGRAPHIC POSITION - North 39° 58' 25"
West 75° 03' 37"
DATE OF SURVEY - June, 2001

AUTHENTICATION

I certify under penalty of law that I have personally examined and am familiar with the information submitted in this document and all attachments and that, based on my inquiry of those individuals immediately responsible for obtaining the information, I believe the submitted information is true, accurate and complete. I am aware that there are significant penalties for submitting false information including the possibility of fine and imprisonment.

Paul J Emilius Jr.

PROFESSIONAL LAND SURVEYOR'S SIGNATURE

Paul J. Emilius, Jr.
PROFESSIONAL LAND SURVEYOR'S NAME
(Please print or type)

SEAL

New Jersey P.L.S. License No. 37186
PROFESSIONAL LAND SURVEYOR'S LICENSE #

The Department reserves the right in cases of violation of permit specified ground water limits or Ground Water Qu Standards (N.J.A.C. 7:9-6.1 et seq.) to require that wells be resurveyed to an accuracy of one-hundredth of a second lat. and longitude. This shall not be considered to be a major modification of the N.J.P.D.E.S. permit.

formb.doc

Double-Cased Monitoring Well

CDM Federal Programs Corporation

Client: U.S. Environmental Protection Agency
Site Name: Puchack Well Field (3220-002)
Project Location: Pennsauken, New Jersey
Drilling Contractor: Uni-Tech Drilling Co.
Drill Rig: Failing CF 1500
Drilling Method: Mud Rotary

Well No.: MW-27D
Location: Bethel Ave
Drilling Date(s): 11/15/00 - 11/21/00
Initial Water Level (ft. bgs):
Geologist: Lisa Campbell
North: East: Elevation (ft.amsl):
Depth to Bottom (ft. bgs): 220'

Annular Space Details

Type of Surface Seal:
Type of Annular Grout: Portland Type II cement/bentonite
Type of Seal: Filter Pro #00 Sand
Type of Filter Pack: Filter Pro #1 Sand
Type of Backfill: natural material (borehole collapse)

Well Construction Materials

	Diameter	Type of Material
Screen	4"	Sch 40 PVC
Riser Casing	4"	Sch 40 PVC
Flush Mount Type		

Measurements

Outer Casing Depth (ft. bgs)	180'
Riser pipe length (ft)	210'
Screen length (ft)	10'
Screen slot size (in)	0.010
Depth to water (ft. bgs)	
Depth to bedrock (ft. bgs)	

Designed by: [illegible]
Affiliation: USGS Nov 20 00

REMARKS:

NOT TO SCALE

Depths - (feet below ground surface)

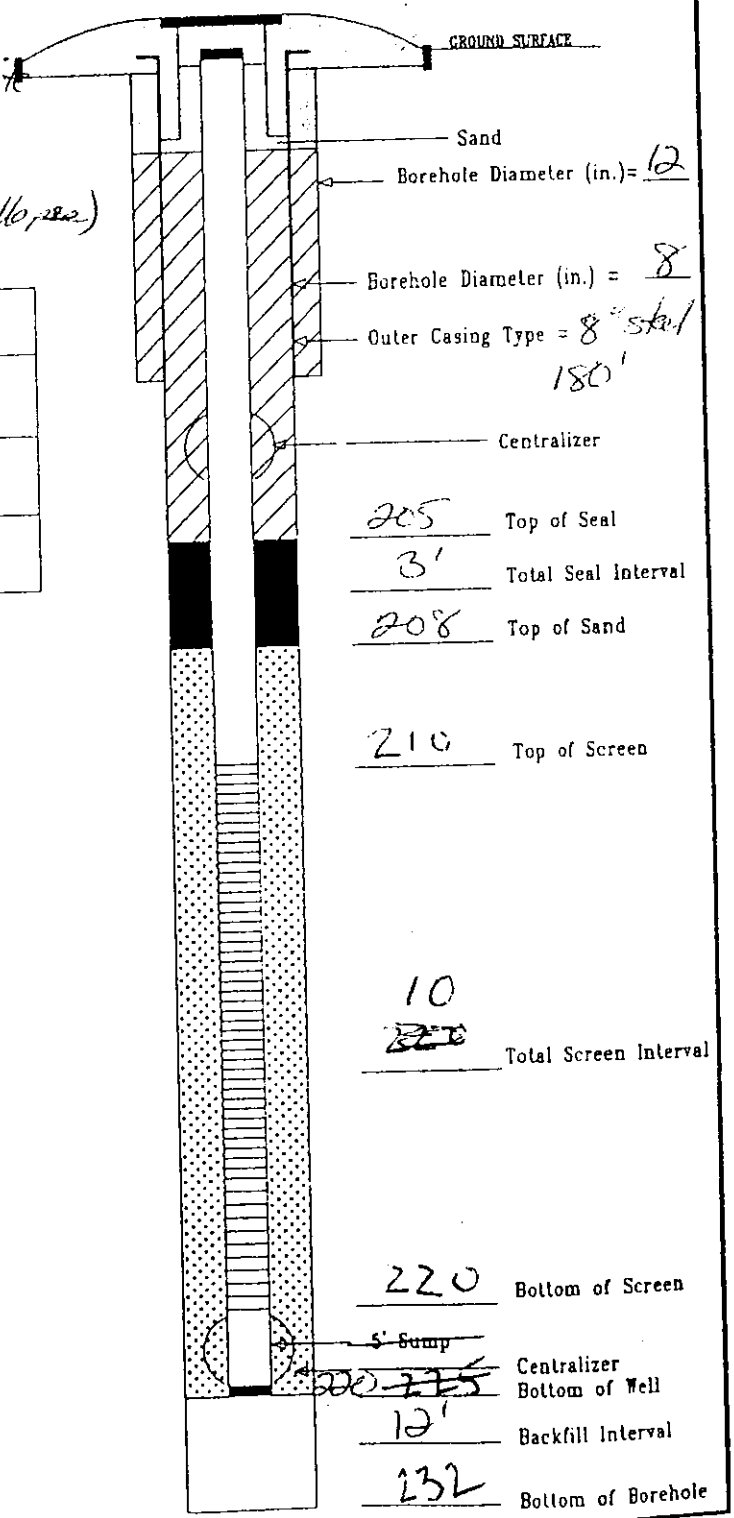

DOUBLE-FORM PUCHACK.GPJ FEDERALL.GDT 6/28/00

DWR-138 M
11/96

New Jersey Department of Environmental Protection
Bureau of Water Allocation

MONITORING WELL RECORD

Well Permit No. 31 - 59365

Atlas Sheet Coordinates 31 . 02 272

OWNER IDENTIFICATION - Owner PENNSAUKEN, TWP. OF
Address 5605 CRESCENT BLVD.
City PENNSAUKEN State NJ Zip Code

WELL LOCATION - If not the same as owner please give address. Owner's Well No. MW 27 D
County CAMDEN Municipality PENNSAUKEN TWP Lot No. 18 Block No. 1102
Address BETHEL AVENUE

DATE WELL STARTED 11/15/00
DATE WELL COMPETED 11/21/00

TYPE OF WELL (as per Well Permit Categories) MONITORING
Regulatory Program Requiring Well Case I.D.#

CONSULTING FIRM/FIELD SUPERVISOR (if applicable) CDM Federal Programs Tele. # 212-785-9123

WELL CONSTRUCTION

Total depth drilled 232 ft.
Well finished to 220 ft.

Borehole diameter:
Top 12 in.
Bottom 8 in.

Well was finished: ☐ above grade ☒ flush mounted

If finished above grade, casing height (stick up) above land surface ____ ft.

Was steel protective casing installed? ☒ Yes ☐ No

Static water level after drilling 76.78 ft.

Water level was measured using M Scope

Well was developed for 4 hours at 25 gpm

Method of development Submersible

Was permanent pumping equipment installed? ☐ Yes ☒ No

Pump capacity NA gpm

Pump type: NA

Drilling Fluid Bentonite Type of Rig CF 1500

Health and Safety Plan submitted? ☒ Yes ☐ No

Level of Protection used on site (circle one) None (D) C B A

Note: Measure all depths from land surface	Depth to Top (ft.)	Depth to Bottom (ft.)	Diameter (inches)	Material	Wgt./Rating (lbs/sch no.)
Single/Inner Casing	0	210	4"	PVC	Sch 40
Middle Casing (for triple cased wells only)					
Outer Casing (largest diameter)	0	180	8"	steel	Sch 40
Open Hole or Screen (No. Used .010)	210	220	4"	PVC	Sch 40
Blank Casings (No. Used)					
Tail Piece					
Gravel Pack	205	232		#1 Morie	
Grout	0 0	180 205		Neat Cement Bentonite	14000 lbs. 300 lbs.

Grouting Method Pressure Tremie
Drilling Method mud Rotary

I certify that I have constructed the above referenced well in accordance with all well permit requirements and applicable State rules and regulations.

Drilling Company UNI-TECH DRILLING
Well Driller (Print) Karl Hitzelberger
Driller's Signature Karl Hitzelberger
Registration No. M1530 Date 7/6/01

GEOLOGIC LOG

Note each depth where water was encountered in consolidated formations.

0-44 F yellow sand and clay
44-87 yellow sand w/ gravel
87-96 red and white clay
96-128 light gray F sand
128-196 light gray FM sand
196-232 gravel heavy chatter and cobbles

COPIES: White - DEP Canary - Driller Pink - Owner Goldenrod - Health Dept.

THIS FORM MUST BE COMPLETED BY THE PERMITTEE OR HIS/HER AGENT

GROUND WATER MONITORING WELL CERTIFICATION - FORM B - LOCATION CERTIFICATION

Name of Permittee: U.S. Environmental Protection Agency
Name of Facility: Puchack Well Field Superfund Site
Location: Pennsauken Township, New Jersey
NJPDES Number:

LAND SURVEYOR'S CERTIFICATION

Well Permit Number (As assigned by NJDEP's Bureau of Water Allocation): 31-59363-
This number must be permanently affixed to the well casing.
Datum: NAD 1983 Horizontal - NGVD 1929 Vertical
Longitude (one-tenth of a second): West 75° 03' 34.6"
Latitude (one-tenth of a second): North 39° 58' 17.8"

North 415070.4'
East 335294.9'

Elevation of Top of Casing (cap off) (one-hundredth of a foot): WC = 67.27' IC = 66.95' GR= 67.26'
Owners Well Number (As shown on application or plans): MW-27D

BENCHMARK - NGS Monument "D 100"
GEOGRAPHIC POSITION - North 39° 58' 25"
West 75° 03' 37"
DATE OF SURVEY - June, 2001

ELEVATION - 44.55'

AUTHENTICATION

I certify under penalty of law that I have personally examined and am familiar with the information submitted in this document and all attachments and that, based on my inquiry of those individuals immediately responsible for obtaining the information, I believe the submitted information is true, accurate and complete. I am aware that there are significant penalties for submitting false information including the possibility of fine and imprisonment.

Paul J Emilius Jr.

PROFESSIONAL LAND SURVEYOR'S SIGNATURE

Paul J. Emilius, Jr.
PROFESSIONAL LAND SURVEYOR'S NAME
(Please print or type)

SEAL

New Jersey P.L.S. License No. 37186
PROFESSIONAL LAND SURVEYOR'S LICENSE #

The Department reserves the right in cases of violation of permit specified ground water limits or Ground Water Qu Standards (N.J.A.C. 7:9-6.1 et seq.) to require that wells be resurveyed to an accuracy of one-hundredth of a second lati and longitude. This shall not be considered to be a major modification of the N.J.P.D.E.S. permit.

formb.doc

Double-Cased Monitoring Well

CDM Federal Programs Corporation

Client:	U.S. Environmental Protection Agency
Site Name:	Puchack Well Field (3220-002)
Project Location:	Pennsauken, New Jersey
Drilling Contractor:	Uni-Tech Drilling Co.
Drill Rig:	Failing CF 1500
Drilling Method:	Mud Rotary

Well No.:	MW-27I
Location:	Bethel Ave
Drilling Date(s):	~~11.27.00~~ 11/21/00 - 11/30/00
Initial Water Level (ft. bgs):	
Geologist:	L. Campbell
North: East:	Elevation (ft.amsl): 60' ±
Depth to Bottom (ft. bgs):	130'

Annular Space Details

Type of Surface Seal:

Type of Annular Grout: Portland Type II cement Bentonite

Type of Seal: Filter Pro #00 Sand

Type of Filter Pack: Filter Pro #1 Sand

Type of Backfill: Filter Pro #1 Sand

Well Construction Materials

	Diameter	Type of Material
Screen	4"	Sch 40 PVC
Riser Casing	4"	Sch 40 PVC
Flush Mount Type		

Measurements

Outer Casing Depth (ft. bgs)	90'
Riser pipe length (ft)	115'
Screen length (ft)	10'
Screen slot size (in)	0.010
Depth to water (ft. bgs)	
Depth to bedrock (ft. bgs)	

Designed by:

Affiliation:

REMARKS:

RW Walker 11/15/00

NOT TO SCALE

Depths - (feet below ground surface)

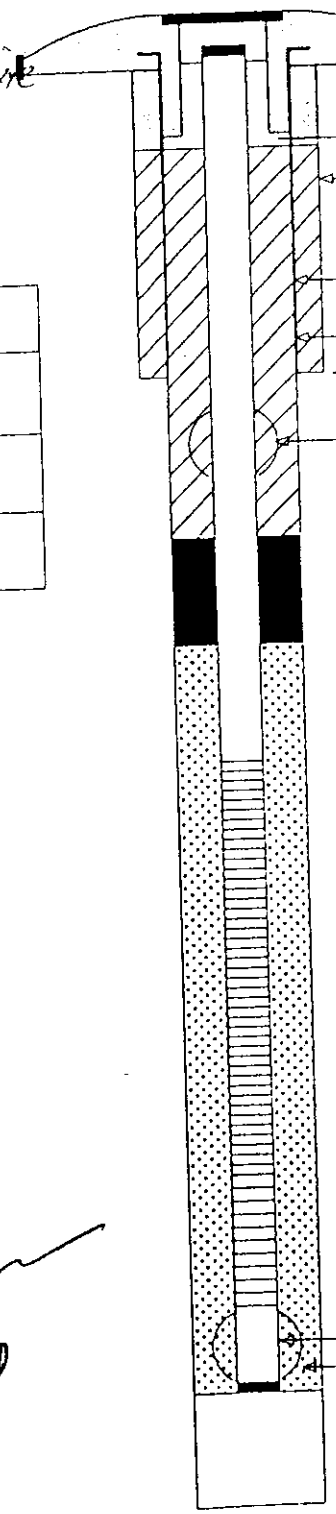

DOUBLE-FORM PUCHACK.GPJ FEDERAL.GDT 6/28/00

DWR-138 M
11/96

New Jersey Department of Environmental Protection
Bureau of Water Allocation

MONITORING WELL RECORD

Well Permit No. 31 - 59364

Atlas Sheet Coordinates 31 02 272

OWNER IDENTIFICATION - Owner PENNSAUKEN, TWP. OF
Address 5605 CRESCENT BLVD.
City PENNSAUKEN State NJ Zip Code

WELL LOCATION - If not the same as owner please give address. Owner's Well No. MW21 I
County CAMDEN Municipality PENNSAUKEN TWP Lot No. 18 Block No. 1102
Address BETHEL AVENUE

DATE WELL STARTED 11/21/00
DATE WELL COMPETED 11/30/00

TYPE OF WELL (as per Well Permit Categories) MONITORING
Regulatory Program Requiring Well Case I.D.#

CONSULTING FIRM/FIELD SUPERVISOR (if applicable) CDM Federal Programs Tele. # 212-785-9123

WELL CONSTRUCTION

Total depth drilled 135 ft.
Well finished to 130 ft.

Borehole diameter:
Top 12 in.
Bottom 8 in.

Well was finished: ☐ above grade
☒ flush mounted

If finished above grade, casing height (stick up) above land surface ____ ft.

Was steel protective casing installed?
☒ Yes ☐ No

Static water level after drilling 51 ft.

Water level was measured using M-Scope

Well was developed for 4 hours
at 25 gpm

Method of development AIRLIFT

Was permanent pumping equipment installed? ☐ Yes ☒ No

Pump capacity NA gpm

Pump type:

Drilling Fluid Bentonite Type of Rig Failing 1500

Health and Safety Plan submitted? ☒ Yes ☐ No

Level of Protection used on site (circle one) None D C B A

Note: Measure all depths from land surface	Depth to Top (ft.)	Depth to Bottom (ft.)	Diameter (inches)	Material	Wgt./Rating (lbs/sch no.)
Single/Inner Casing	0	115	4"	PVC	Sch 40
Middle Casing (for triple cased wells only)					
Outer Casing (largest diameter)	0	90	8"	Steel	Sch 40
Open Hole or Screen (No. Used .010)	115	125	4"	PVC	Sch 40
Blank Casings (No. Used)					
Tail Piece					
Gravel Pack	111	135	8	#1 Sand	
Grout	0 0	90 111		Neat Cement Bentonite	1350 lbs. 260 lbs.

Grouting Method Pressure Tremie
Drilling Method Mud Rotary

GEOLOGIC LOG

Note each depth where water was encountered in consolidated formations.

0-30 yellow sand
30-80 sand and clay lenses
80-120 white & red clay
120-135 white sand

I certify that I have constructed the above referenced well in accordance with all well permit requirements and applicable State rules and regulations.

Drilling Company UNI-TECH DRILLING
Well Driller (Print) Karl Hilzelberger
Driller's Signature Karl Hilzelberger
Registration No. M1530 Date 7/6/01

COPIES: White - DEP Canary - Driller Pink - Owner Goldenrod - Health Dept.

THIS FORM MUST BE COMPLETED BY THE PERMITTEE OR HIS/HER AGENT

GROUND WATER MONITORING WELL CERTIFICATION - FORM B - LOCATION CERTIFICATION

Name of Permittee: U.S. Environmental Protection Agency
Name of Facility: Puchack Well Field Superfund Site
Location: Pennsauken Township, New Jersey
NJPDES Number:

LAND SURVEYOR'S CERTIFICATION

Well Permit Number (As assigned by NJDEP's Bureau of Water Allocation): 31-59364-
This number must be permanently affixed to the well casing.
Datum: NAD 1983 Horizontal - NGVD 1929 Vertical
Longitude (one-tenth of a second): West 75° 03' 34.7"
Latitude (one-tenth of a second): North 39° 58' 17.9"

North 415076.9'
East 335285.5'

Elevation of Top of Casing (cap off) (one-hundredth of a foot): WC = 66.90' IC = 66.70' GR= 66.91'
Owners Well Number (As shown on application or plans): MW-27I

BENCHMARK - NGS Monument "D 100"
GEOGRAPHIC POSITION - North 39° 58' 25"
West 75° 03' 37"
DATE OF SURVEY - June, 2001

ELEVATION - 44.55'

AUTHENTICATION

I certify under penalty of law that I have personally examined and am familiar with the information submitted in this document and all attachments and that, based on my inquiry of those individuals immediately responsible for obtaining the information, I believe the submitted information is true, accurate and complete. I am aware that there are significant penalties for submitting false information including the possibility of fine and imprisonment.

Paul J Emilius Jr.

PROFESSIONAL LAND SURVEYOR'S SIGNATURE

Paul J. Emilius, Jr.
PROFESSIONAL LAND SURVEYOR'S NAME
(Please print or type)

SEAL

New Jersey P.L.S. License No. 37186
PROFESSIONAL LAND SURVEYOR'S LICENSE #

The Department reserves the right in cases of violation of permit specified ground water limits or Ground Water Qu Standards (N.J.A.C. 7:9-6.1 et seq.) to require that wells be resurveyed to an accuracy of one-hundredth of a second latitu and longitude. This shall not be considered to be a major modification of the N.J.P.D.E.S. permit.

formb.doc

Single ~~Double~~-Cased Monitoring Well

CDM Federal Programs Corporation

Client: U.S. Environmental Protection Agency
Site Name: Puchack Well Field (3220-002)
Project Location: Pennsauken, New Jersey
Drilling Contractor: Uni-Tech Drilling Co.
Drill Rig: Failing CF1500
Drilling Method: Mud Rotary

Well No.: MW-27M
Location: Bethel Ave
Drilling Date(s): ~~11/15/00~~ 11/30/00
Initial Water Level (ft. bgs):
Geologist: L. Campbell
North: East: Elevation (ft.amsl): 60±
Depth to Bottom (ft. bgs):

Annular Space Details

Type of Surface Seal:
Type of Annular Grout: Portland Type II cement/bentonite
Type of Seal: Filter Pro #D0 sand
Type of Filter Pack: Filter Pro #1 sand
Type of Backfill: Filter Pro #1 Sand

Well Construction Materials

	Diameter	Type of Material
Screen	4"	Sch. 40 PVC
Riser Casing	4"	Sch. 40 PVC
Flush Mount Type		

Measurements

Outer Casing Depth (ft. bgs)	—
Riser pipe length (ft)	78'
Screen length (ft)	5'
Screen slot size (in)	0.010
Depth to water (ft. bgs)	
Depth to bedrock (ft. bgs)	

Designed by:
Affiliation:
REMARKS:

R. Walker 11/15/00

NOT TO SCALE

Depths - (feet below ground surface)

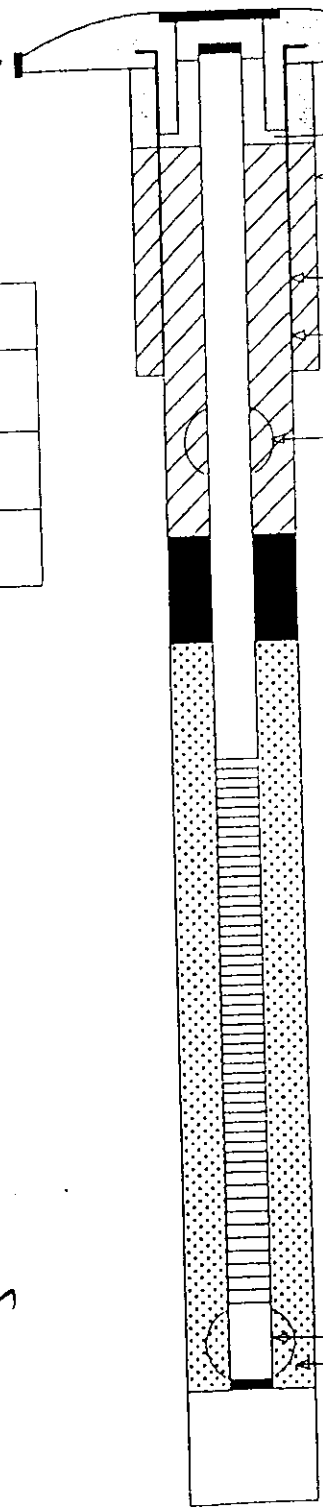

DOUBLE-FORM PUCHACK.GPJ FEDERAL.GDT 6/28/00

DWR-138 M
11/96

New Jersey Department of Environmental Protection
Bureau of Water Allocation

MONITORING WELL RECORD

Well Permit No. 31 - 59365

Atlas Sheet Coordinates 31 02 272

OWNER IDENTIFICATION - Owner PENNSAUKEN, TWP. OF
Address 5605 CRESCENT BLVD.
City PENNSAUKEN State NJ Zip Code

WELL LOCATION - If not the same as owner please give address. Owner's Well No. MW27M
County CAMDEN Municipality PENNSAUKEN TWP Lot No. 18 Block No. 1102
Address BETHEL AVENUE

DATE WELL STARTED 11/30/00
DATE WELL COMPETED 11/30/00

TYPE OF WELL (as per Well Permit Categories) MONITORING
Regulatory Program Requiring Well Case I.D.#

CONSULTING FIRM/FIELD SUPERVISOR (if applicable) CDM Federal Programs Tele. # 212-785-9123

WELL CONSTRUCTION

Total depth drilled 85 ft.
Well finished to 83 ft.

Borehole diameter:
Top 8 in.
Bottom 8 in.

Well was finished: ☐ above grade
☒ flush mounted

If finished above grade, casing height (stick up) above land surface ____ ft.

Was steel protective casing installed?
☐ Yes ☐ No

Static water level after drilling 75.11 ft.

Water level was measured using M-Scope

Well was developed for 4 hours at 25 gpm

Method of development Air Lift

Was permanent pumping equipment installed? ☐ Yes ☒ No

Pump capacity NA gpm

Pump type:

Drilling Fluid Bentonite Type of Rig Failing 1500

Health and Safety Plan submitted? ☐ Yes ☒ No

Level of Protection used on site (circle one) None D C B A

Note: Measure all depths from land surface	Depth to Top (ft.)	Depth to Bottom (ft.)	Diameter (inches)	Material	Wgt./Rating (lbs/sch no.)
Single/Inner Casing	0	78	4"	PVC	Sch 40
Middle Casing (for triple cased wells only)					
Outer Casing (largest diameter)					
Open Hole or Screen (No. Used .010)	78	83	4"	PVC	Sch 40
Blank Casings (No. Used)					
Tail Piece					
Gravel Pack	74	85	8	#1 Sand	
Grout	0	74		Neat Cement Bentonite	1000 lbs. 50 lbs.

Grouting Method Pressure Tremie
Drilling Method Mud Rotary

GEOLOGIC LOG

Note each depth where water was encountered in consolidated formations.

0-19 yellow sand
19-50 clay
50-85 sand & clay lenses

I certify that I have constructed the above referenced well in accordance with all well permit requirements and applicable State rules and regulations.

Drilling Company UNI-TECH DRILLING
Well Driller (Print) Karl Hitzelberger
Driller's Signature Karl Hitzelberger
Registration No. M1530 Date 7/6/01

COPIES: White - DEP Canary - Driller Pink - Owner Goldenrod - Health Dept.

THIS FORM MUST BE COMPLETED BY THE PERMITTEE OR HIS/HER AGENT

GROUND WATER MONITORING WELL CERTIFICATION - FORM B - LOCATION CERTIFICATION

Name of Permittee: U.S. Environmental Protection Agency
Name of Facility: Puchack Well Field Superfund Site
Location: Pennsauken Township, New Jersey
NJPDES Number:

LAND SURVEYOR'S CERTIFICATION

Well Permit Number (As assigned by NJDEP's Bureau of Water Allocation): 31-59365-
This number must be permanently affixed to the well casing.
Datum: NAD 1983 Horizontal - NGVD 1929 Vertical
Longitude (one-tenth of a second): West 75° 03' 34.8"
Latitude (one-tenth of a second): North 39° 58' 18.0"

North 415083.8'
East 335275.0'

Elevation of Top of Casing (cap off) (one-hundredth of a foot): WC = 66.25' IC = 65.94' GR= 66.24'
Owners Well Number (As shown on application or plans): MW-27M

BENCHMARK - NGS Monument "D 100" **ELEVATION** - 44.55'
GEOGRAPHIC POSITION - North 39° 58' 25"
West 75° 03' 37"
DATE OF SURVEY - June, 2001

AUTHENTICATION

I certify under penalty of law that I have personally examined and am familiar with the information submitted in this document and all attachments and that, based on my inquiry of those individuals immediately responsible for obtaining the information, I believe the submitted information is true, accurate and complete. I am aware that there are significant penalties for submitting false information including the possibility of fine and imprisonment.

Paul J Emilius Jr.

PROFESSIONAL LAND SURVEYOR'S SIGNATURE

Paul J. Emilius, Jr.
PROFESSIONAL LAND SURVEYOR'S NAME
(Please print or type)

SEAL

New Jersey P.L.S. License No. 37186
PROFESSIONAL LAND SURVEYOR'S LICENSE #

The Department reserves the right in cases of violation of permit specified ground water limits or Ground Water Qu Standards (N.J.A.C. 7:9-6.1 et seq.) to require that wells be resurveyed to an accuracy of one-hundredth of a second lat and longitude. This shall not be considered to be a major modification of the N.J.P.D.E.S. permit.

formb.doc

CDM Federal Programs Corporation

Double-Cased Monitoring Well

Client: U.S. Environmental Protection Agency

Site Name: Puchack Well Field (3220-002)

Project Location: Pennsauken, New Jersey

Drilling Contractor: Uni-Tech Drilling Co.

Drill Rig: MUD ROTARY FAILING 1500

Drilling Method: MUD ROTARY

Well No.: MW-29D

Location: Cooper Rd & Collins Ave

Drilling Date(s): 10/31 — 11/~~07~~ 7/00

Initial Water Level (ft. bgs):

Geologist: M Akbar

North: East: Elevation (ft.amsl):

Depth to Bottom (ft. bgs): 280'

Annular Space Details

Type of Surface Seal:

Type of Annular Grout: Portland Type CEMENT / BENTONITE

Type of Seal: Silica NO. 00 SAND

Type of Filter Pack: Silica NO. 1 SAND

Type of Backfill: Silica NO. 1 SAND

Well Construction Materials

	Diameter	Type of Material
Screen	4"	PVC SCH 40
Riser Casing	4"	PVC SCH 40
Flush Mount Type		

Measurements

Outer Casing Depth (ft. bgs)	184
Riser pipe length (ft)	265
Screen length (ft)	10
Screen slot size (in)	0.010
Depth to water (ft. bgs)	
Depth to bedrock (ft. bgs)	

Designed by: DICK WALKER

Affiliation: USGS

REMARKS:

R Walker 11/8/07

NOT TO SCALE

Depths - (feet below ground surface)

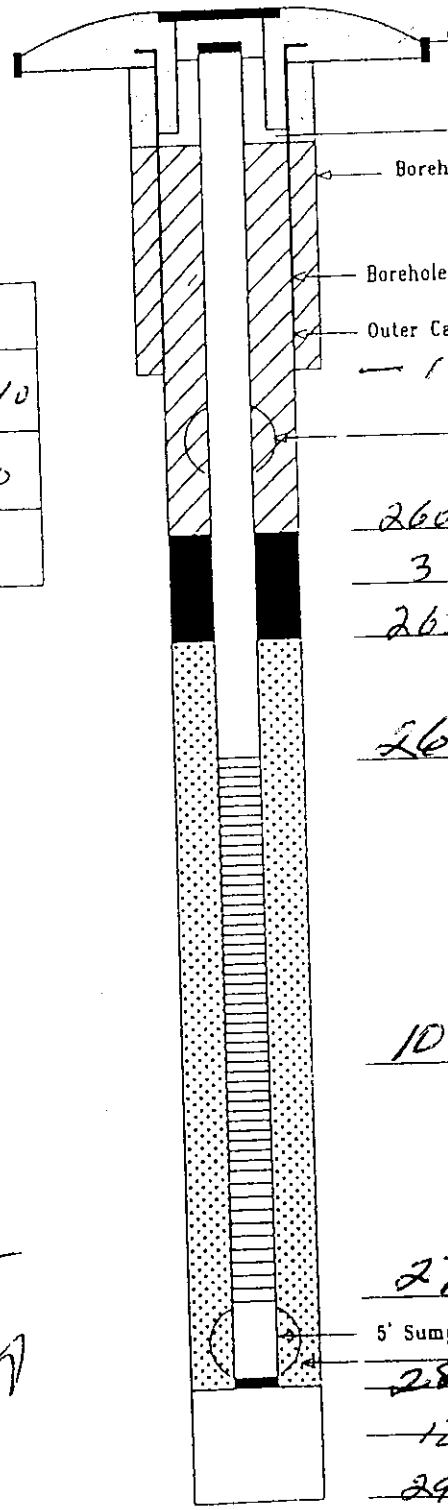

GROUND SURFACE

Sand 12

Borehole Diameter (in.) = ~~13~~

Borehole Diameter (in.) = 8

Outer Casing Type = 8" Steel — 184'

Centralizer

260 Top of Seal

3 Total Seal Interval

263 Top of Sand

265' Top of Screen

10 Total Screen Interval

275' Bottom of Screen

5' Sump

Centralizer

~~280~~ Bottom of Well

~~12~~ Backfill Interval

~~292~~ Bottom of Borehole

DOUBLE-FORM PUCHACK.GPJ FEDERAL.GDT 8/28/00

DWR-138 M
11/96

New Jersey Department of Environmental Protection
Bureau of Water Allocation

MONITORING WELL RECORD

Well Permit No. 31 - 59192

Atlas Sheet Coordinates 31 : 02 : 537

OWNER IDENTIFICATION - Owner PENNSAUKEN, TOWNSHIP OF
Address 5605 N. CRESCENT BLVD.
City PENNSAUKEN State NJ Zip Code

WELL LOCATION - If not the same as owner please give address: Owner's Well No. MW29D
County CAMDEN Municipality PENNSAUKEN TWP Lot No. 12 Block No. 2901
Address COOPER AVENUE

DATE WELL STARTED 10/31/00
DATE WELL COMPETED 11/7/00

TYPE OF WELL (as per Well Permit Categories) MONITORING
Regulatory Program Requiring Well Case I.D.#

CONSULTING FIRM/FIELD SUPERVISOR (if applicable) CDM Federal Programs Tele. # 212-785-912

WELL CONSTRUCTION

Total depth drilled 292 ft.
Well finished to 280 ft.

Borehole diameter:
Top 12 in.
Bottom 8 in.

Well was finished: ☐ above grade ☒ flush mounted

If finished above grade, casing height (stick up) above land surface ____ ft.

Was steel protective casing installed? ☒ Yes ☐ No

Static water level after drilling 58.53 ft.

Water level was measured using M. Scope

Well was developed for 4 hours at 25 gpm

Method of development Submersible

Was permanent pumping equipment installed? ☐ Yes ☒ No

Pump capacity NA gpm

Pump type: NA

Drilling Fluid Bentonite Type of Rig Failing 1500

Health and Safety Plan submitted? ☒ Yes ☐ No

Level of Protection used on site (circle one) None D C B A

Note: Measure all depths from land surface	Depth to Top (ft.)	Depth to Bottom (ft.)	Diameter (inches)	Material	Wgt./Rating (lbs/sch no.)
Single/Inner Casing	0	265	4"	PVC	Sch 40
Middle Casing (for triple cased wells only)					
Outer Casing (largest diameter)	0	184	8"	Steel	Sch 40
Open Hole or Screen (No. Used .010)	265	275	4"	Steel	Sch 40
Blank Casings (No. Used)					
Tail Piece					
Gravel Pack	262	292		#1 Morie	
Grout	0 0	184 260		Neat Cement Bentonite	17000 lbs. 550 lbs.

Grouting Method Pressure Tremie
Drilling Method Mud Rotary

GEOLOGIC LOG

Note each depth where water was encountered in consolidated formations.

0-12 sand and Gravel
12-184 light gray sand w/ traces of clay
184-216 reddish brown hard clay
216-284 light gray, very dense fine sand
284-292 gravels some sand

I certify that I have constructed the above referenced well in accordance with all well permit requirements and applicable State rules and regulations.

Drilling Company UNI-TECH DRILLING
Well Driller (Print) Karl Hitzelberger
Driller's Signature Karl Hitzelberger
Registration No. M1530 Date 10/6/01

COPIES: White - DEP Canary - Driller Pink - Owner Goldenrod - Health Dept.

THIS FORM MUST BE COMPLETED BY THE PERMITTEE OR HIS/HER AGENT

GROUND WATER MONITORING WELL CERTIFICATION - FORM B - LOCATION CERTIFICATION

Name of Permittee: U.S. Environmental Protection Agency
Name of Facility: Puchack Well Field Superfund Site
Location: Pennsauken Township, New Jersey
NJPDES Number:

LAND SURVEYOR'S CERTIFICATION

Well Permit Number (As assigned by NJDEP's Bureau of Water Allocation): 31-59192-
This number must be permanently affixed to the well casing.
Datum: NAD 1983 Horizontal - NGVD 1929 Vertical
Longitude (one-tenth of a second): West 75° 02' 32.7"
Latitude (one-tenth of a second): North 39° 57' 44.2"

North 411638.5'
East 340092.5'

Elevation of Top of Casing (cap off) (one-hundredth of a foot): WC = 40.18' IC = 39.89' GR= 40.18'
Owners Well Number (As shown on application or plans): MW-29D

BENCHMARK - NGS Monument "D 100" **ELEVATION** - 44.55'
GEOGRAPHIC POSITION - North 39° 58' 25"
West 75° 03' 37"
DATE OF SURVEY - June, 2001

AUTHENTICATION

I certify under penalty of law that I have personally examined and am familiar with the information submitted in this document and all attachments and that, based on my inquiry of those individuals immediately responsible for obtaining the information, I believe the submitted information is true, accurate and complete. I am aware that there are significant penalties for submitting false information including the possibility of fine and imprisonment.

Paul J Emilius Jr.

PROFESSIONAL LAND SURVEYOR'S SIGNATURE

Paul J. Emilius, Jr.
PROFESSIONAL LAND SURVEYOR'S NAME
(Please print or type)

SEAL

New Jersey P.L.S. License No. 37186
PROFESSIONAL LAND SURVEYOR'S LICENSE #

The Department reserves the right in cases of violation of permit specified ground water limits or Ground Water Qu Standards (N.J.A.C. 7:9-6.1 et seq.) to require that wells be resurveyed to an accuracy of one-hundredth of a second lati and longitude. This shall not be considered to be a major modification of the N.J.P.D.E.S. permit.

CDM Federal Programs Corporation

Double-Cased Monitoring Well

Client: U.S. Environmental Protection Agency
Site Name: Puchack Well Field (3220-002)
Project Location: Pennsauken, New Jersey
Drilling Contractor: Uni-Tech Drilling Co.
Drill Rig: Failing CF1500
Drilling Method: Mud Rotary

Well No.: MW-29 I
Location: Copper & Collins Ave
Drilling Date(s): 11/8/00 - 11/14/00
Initial Water Level (ft. bgs):
Geologist: L. Campbell
North: East: Elevation (ft.amsl):
Depth to Bottom (ft. bgs): 175'

Annular Space Details

Type of Surface Seal:
Type of Annular Grout: Portland Type II cement/bentonite
Type of Seal: Filter Pro #00 Sand
Type of Filter Pack: Filter Pro #1 Sand
Type of Backfill: Filter Pro #1 Sand

Well Construction Materials

	Diameter	Type of Material
Screen	4"	Sch 40 PVC
Riser Casing	4"	Sch 40 PVC
Flush Mount Type		

Measurements

Outer Casing Depth (ft. bgs)	130'
Riser pipe length (ft)	160'
Screen length (ft)	10'
Screen slot size (in)	0.010
Depth to water (ft. bgs)	
Depth to bedrock (ft. bgs)	

Designed by:
Affiliation:
REMARKS:

R. L. Walker 11/16/00

NOT TO SCALE

Depths - (feet below ground surface)

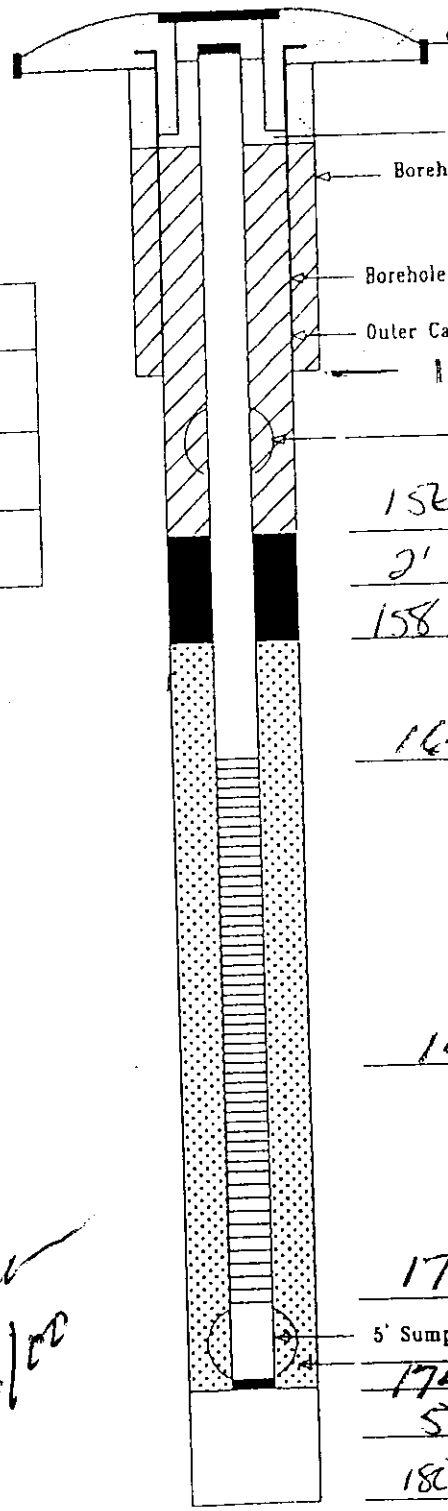

GROUND SURFACE
Sand
Borehole Diameter (in.)= 12"
Borehole Diameter (in.) = 8"
Outer Casing Type = 8" Steel
130'
Centralizer
156' Top of Seal
2' Total Seal Interval
158 Top of Sand
160' Top of Screen
10 Total Screen Interval
170' Bottom of Screen
5' Sump
Centralizer
175 Bottom of Well
5' Backfill Interval
180' Bottom of Borehole

DOUBLE-FORM PUCHACK.GPJ FEDERAL.GDT 6/28/00

DWR-138 M
11/96

New Jersey Department of Environmental Protection
Bureau of Water Allocation

MONITORING WELL RECORD

Well Permit No. 31 59193

Atlas Sheet Coordinates 31 02 537

OWNER IDENTIFICATION - Owner PENNSAUKEN, TOWNSHIP OF
Address 5605 N. CRESCENT BLVD
City PENNSAUKEN State N.J Zip Code

WELL LOCATION - If not the same as owner please give address. Owner's Well No. MW 29 I
County CAMDEN Municipality PENNSAUKEN TWP Lot No. 12 Block No. 2901
Address COOPER AVENUE

DATE WELL STARTED 11 / 8 / 00
DATE WELL COMPETED 11 / 14 / 00

TYPE OF WELL (as per Well Permit Categories) MONITORING
Regulatory Program Requiring Well Case I.D.#

CONSULTING FIRM/FIELD SUPERVISOR (if applicable) CDM Federal Programs Tele. # 212-785-7123

WELL CONSTRUCTION
Total depth drilled 180 ft.
Well finished to 175 ft.

Borehole diameter:
Top 12 in.
Bottom 8 in.

Well was finished: ☐ above grade ☒ flush mounted

If finished above grade, casing height (stick up) above land surface ____ ft.

Was steel protective casing installed? ☐ Yes ☐ No

Static water level after drilling 58.18 ft.

Water level was measured using M-Scope

Well was developed for 4 hours at 25 gpm

Method of development Air Lift

Was permanent pumping equipment installed? ☐ Yes ☒ No

Pump capacity NA gpm

Pump type: NA

Drilling Fluid Bentonite Type of Rig Failing 1500

Health and Safety Plan submitted? ☒ Yes ☐ No

Level of Protection used on site (circle one) None D C B A

Note: Measure all depths from land surface	Depth to Top (ft.)	Depth to Bottom (ft.)	Diameter (inches)	Material	Wgt./Rating (lbs/sch no.)
Single/Inner Casing	0	160	4"	PVC	Sch40
Middle Casing (for triple cased wells only)					
Outer Casing (largest diameter)	0	130	8"	Steel	Sch40
Open Hole or Screen (No. Used, 010)	160	170	4"	PVC	Sch40
Blank Casings (No. Used)					
Tail Piece					
Gravel Pack	156	180	8	#1 Sand	
Grout	0 0	130 156		Neat Cement Bentonite	14500 lbs. ____ lbs.

Grouting Method Pressure Tremie
Drilling Method Mud Rotary

I certify that I have constructed the above referenced well in accordance with all well permit requirements and applicable State rules and regulations.

Drilling Company UNI-TECH DRILLING
Well Driller (Print) Karl Hitzelberger
Driller's Signature Karl Hitzelberger
Registration No. M1530 Date 7/6/01

GEOLOGIC LOG

Note each depth where water was encountered in consolidated formations.

0-130 gray & yellow sand
130-147 orange clay
147-165 MF sand
165-180 MC sand

COPIES: White - DEP Canary - Driller Pink - Owner Goldenrod - Health Dept.

THIS FORM MUST BE COMPLETED BY THE PERMITTEE OR HIS/HER AGENT

GROUND WATER MONITORING WELL CERTIFICATION - FORM B - LOCATION CERTIFICATION

Name of Permittee: U.S. Environmental Protection Agency
Name of Facility: Puchack Well Field Superfund Site
Location: Pennsauken Township, New Jersey
NJPDES Number:

LAND SURVEYOR'S CERTIFICATION

Well Permit Number (As assigned by NJDEP's Bureau of Water Allocation): 31-59193-
This number must be permanently affixed to the well casing.
Datum: NAD 1983 Horizontal - NGVD 1929 Vertical
Longitude (one-tenth of a second): West 75° 02' 32.8"
Latitude (one-tenth of a second): North 39° 57' 44.2"

North 411641.9'
East 340085.6'

Elevation of Top of Casing (cap off) (one-hundredth of a foot): WC = 40.28' IC = 39.83' GR= 40.28'
Owners Well Number (As shown on application or plans): MW-29I

BENCHMARK - NGS Monument "D 100"
GEOGRAPHIC POSITION - North 39° 58' 25"
West 75° 03' 37"
DATE OF SURVEY - June, 2001

ELEVATION - 44.55'

AUTHENTICATION

I certify under penalty of law that I have personally examined and am familiar with the information submitted in this document and all attachments and that, based on my inquiry of those individuals immediately responsible for obtaining the information, I believe the submitted information is true, accurate and complete. I am aware that there are significant penalties for submitting false information including the possibility of fine and imprisonment.

Paul J Emilius Jr.

PROFESSIONAL LAND SURVEYOR'S SIGNATURE

Paul J. Emilius, Jr.
PROFESSIONAL LAND SURVEYOR'S NAME
(Please print or type)

SEAL

New Jersey P.L.S. License No. 37186
PROFESSIONAL LAND SURVEYOR'S LICENSE #

The Department reserves the right in cases of violation of permit specified ground water limits or Ground Water Qu Standards (N.J.A.C. 7:9-6.1 et seq.) to require that wells be resurveyed to an accuracy of one-hundredth of a second lat. and longitude. This shall not be considered to be a major modification of the N.J.P.D.E.S. permit.

formb.doc

CDM Federal Programs Corporation

Single-Cased Monitoring Well

Client: U.S. Environmental Protection Agency

Site Name: Puchack Well Field (3220-002)

Project Location: Pennsauken, New Jersey

Drilling Contractor: Uni-Tech Drilling Co.

Drill Rig: Failing 1500

Drilling Method: Mud Rotary

Well No.: MW-29S

Location: Cooper & Collins

Drilling Date(s): 1/8/01

Initial Water Level (ft. bgs):

Geologist: M. AKBAR

North: East: Elevation (ft.amsl):

Depth to Bottom (ft. bgs): 120

Annular Space Details

Type of Surface Seal: Portland Type CEMENT/BENTONITE

Type of Annular Grout: ~~NO. 00 SAND~~

Type of Seal: Filterpa NO 00 SAND

Type of Filter Pack: Filterpa NO 1 SAND

Type of Backfill: Filterpa No. 1 SAND

Well Construction Materials

	Diameter	Type of Material
Screen	4"	PVC SCH 40
Riser Casing	4"	PVC SCH 40
Flush Mount Type		

Measurements

Riser pipe length (ft)	105
Screen length (ft)	10
Screen slot size (in)	0.010
Depth to water (ft. bgs)	
Depth to bedrock (ft. bgs)	

Designed by: DICK WALKER

Affiliation: USGS

REMARKS:

NOT TO SCALE

Depths - (feet below ground surface)

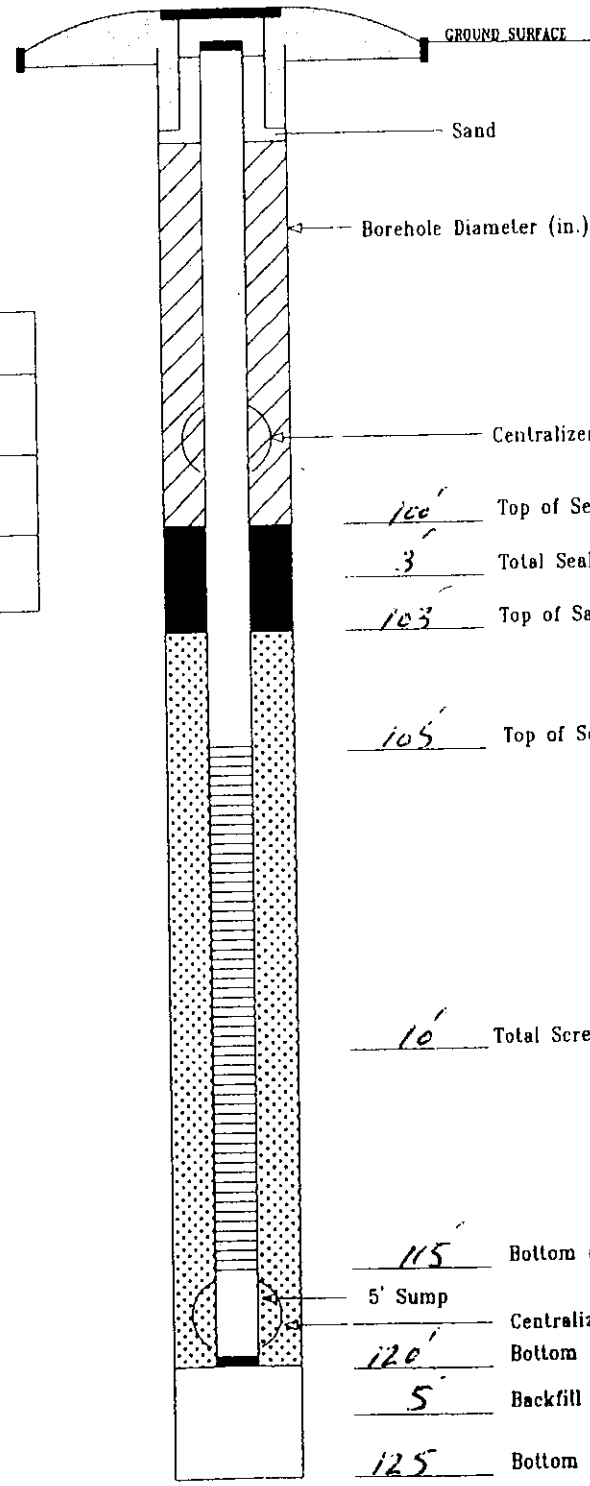

SINGLE-FORM PUCHACK.GPJ FEDERAL.GDT 8/28/00

DWR-138 M
11/98

New Jersey Department of Environmental Protection
Bureau of Water Allocation

MONITORING WELL RECORD

Well Permit No. 31 - 59619

Atlas Sheet Coordinates 31 02 537

OWNER IDENTIFICATION - Owner PENNSAUKEN TOWNSHIP
Address 5605 N CRESCENT BLVD
City PENNSAUKEN State NJ Zip Code

WELL LOCATION - If not the same as owner please give address. Owner's Well No. MW 29S
County CAMDEN Municipality PENNSAUKEN TWP Lot No. 12 Block No. 2901
Address COOPER AVE
DATE WELL STARTED 1/8/01
DATE WELL COMPLETED 1/8/01

TYPE OF WELL (as per Well Permit Categories) MONITORING
Regulatory Program Requiring Well Case I.D.#

CONSULTING FIRM/FIELD SUPERVISOR (if applicable) CDM Federal Programs Tele. #212-785-9123

WELL CONSTRUCTION

Total depth drilled 125 ft.
Well finished to 120 ft.

Borehole diameter:
Top 8 in.
Bottom 8 in.

Well was finished: ☐ above grade ☒ flush mounted

If finished above grade, casing height (stick up) above land surface ____ ft.

Was steel protective casing installed? ☒ Yes ☐ No

Static water level after drilling 55.94 ft.

Water level was measured using M Scope

Well was developed for 4 hours at 25 gpm

Method of development Air Lift

Was permanent pumping equipment installed? ☐ Yes ☒ No

Pump capacity NA gpm

Pump type:

Drilling Fluid Bentonite Type of Rig Failing 1500

Health and Safety Plan submitted? ☒ Yes ☐ No

Level of Protection used on site (circle one) None (D) C B A

Note: Measure all depths from land surface	Depth to Top (ft.)	Depth to Bottom (ft.)	Diameter (inches)	Material	Wgt./Rating (lbs/sch no.)
Single/Inner Casing	0	105	4"	PVC	Sch 40
Middle Casing (for triple cased wells only)					
Outer Casing (largest diameter)					
Open Hole or Screen (No. Used 010)	105	115	4"	PVC	Sch 40
Blank Casings (No. Used)					
Tail Piece					
Gravel Pack	100	125	8	#1 Sand	
Grout	0	100		Neat Cement Bentonite	700 lbs. 150 lbs.

Grouting Method pressure tremie
Drilling Method mud Rotary

GEOLOGIC LOG

Note each depth where water was encountered in consolidated formations.

0-40 brownish sand
40-85 white & red clay
85-125 white sand

I certify that I have constructed the above referenced well in accordance with all well permit requirements and applicable State rules and regulations.

Drilling Company UNI-TECH DRILLING
Well Driller (Print) Karl Hitzelberger
Driller's Signature Karl Hitzelberger
Registration No. M1530 Date 2/6/01

COPIES: White - DEP Canary - Driller Pink - Owner Goldenrod - Health Dept.

THIS FORM MUST BE COMPLETED BY THE PERMITTEE OR HIS/HER AGENT

GROUND WATER MONITORING WELL CERTIFICATION - FORM B - LOCATION CERTIFICATION

Name of Permittee: U.S. Environmental Protection Agency
Name of Facility: Puchack Well Field Superfund Site
Location: Pennsauken Township, New Jersey
NJPDES Number:

LAND SURVEYOR'S CERTIFICATION

Well Permit Number (As assigned by NJDEP's Bureau of Water Allocation): 31-59619-
This number must be permanently affixed to the well casing.
Datum: NAD 1983 Horizontal - NGVD 1929 Vertical
Longitude (one-tenth of a second): West 75° 02' 32.6"
Latitude (one-tenth of a second): North 39° 57' 44.3"

North 411650.9'
East 340099.6'

Elevation of Top of Casing (cap off) (one-hundredth of a foot): WC = 40.31' IC = 39.98' GR= 40.28'
Owners Well Number (As shown on application or plans): MW-29S

BENCHMARK - NGS Monument "D 100"
GEOGRAPHIC POSITION - North 39° 58' 25"
West 75° 03' 37"
DATE OF SURVEY - June, 2001

ELEVATION - 44.55'

AUTHENTICATION

I certify under penalty of law that I have personally examined and am familiar with the information submitted in this document and all attachments and that, based on my inquiry of those individuals immediately responsible for obtaining the information, I believe the submitted information is true, accurate and complete. I am aware that there are significant penalties for submitting false information including the possibility of fine and imprisonment.

Paul J Emilius Jr.

PROFESSIONAL LAND SURVEYOR'S SIGNATURE

Paul J. Emilius, Jr.
PROFESSIONAL LAND SURVEYOR'S NAME
(Please print or type)

SEAL

New Jersey P.L.S. License No. 37186
PROFESSIONAL LAND SURVEYOR'S LICENSE #

The Department reserves the right in cases of violation of permit specified ground water limits or Ground Water Qu Standards (N.J.A.C. 7:9-6.1 et seq.) to require that wells be resurveyed to an accuracy of one-hundredth of a second lat and longitude. This shall not be considered to be a major modification of the N.J.P.D.E.S. permit.

formb.doc

CDM Federal Programs Corporation

Double-Cased Monitoring Well

Client:	U.S. Environmental Protection Agency	Well No.:	MW 30D
Site Name:	Puchack Well Field (3220-002)	Location:	7/20/00 - Corbett & Wyndham
Project Location:	Pennsauken, New Jersey	Drilling Date(s):	~~7/20/00~~ 06/25 - 8/03/00
Drilling Contractor:	Uni-Tech Drilling Co.	Initial Water Level (ft. bgs):	
Drill Rig:	Failing 1500	Geologist:	L. Campbell
Drilling Method:	mud rotary	North: East:	Elevation (ft.amsl):
		Depth to Bottom (ft. bgs):	~~257~~ 253'

Annular Space Details

Type of Surface Seal: Filter Pro Portland Type I

Type of Annular Grout: Cement/bentonite

Type of Seal: Filter Pro #00 Sand

Type of Filter Pack: Filter Pro #01 Sand

Well Construction Materials

	Diameter	Type of Material
Screen	4"	Sch 40 PVC
Riser Casing	4"	Sch 40 PVC
Flush Mount Type		

Measurements

Outer Casing Depth (ft. bgs)	195'
Riser pipe length (ft)	248'
Screen length (ft)	5'
Screen slot size (in)	0.010"
Depth to water (ft. bgs)	
Depth to bedrock (ft. bgs)	

Designed by: Dick Walker

Affiliation: USGS

REMARKS: Propose Screen Setting

Depths - (feet)

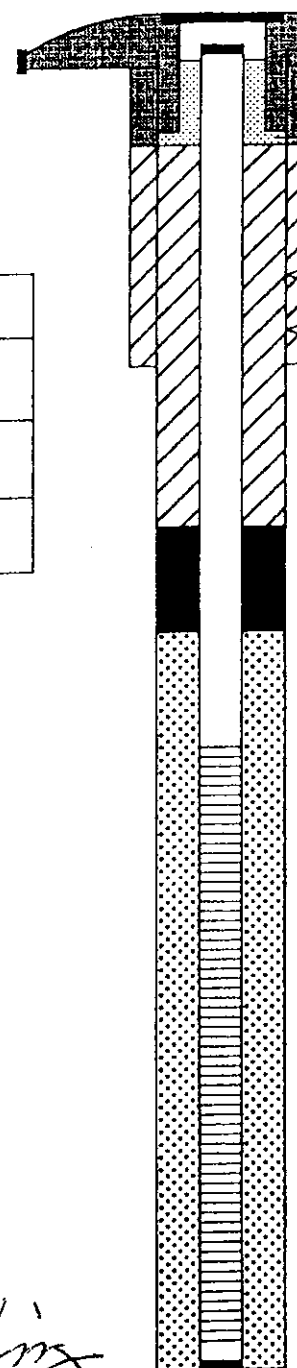

242.5 Top of Seal

~~243~~ 243.5 Total Seal Interval

246 Top of Sand

248 Top of Screen

5 ft Total Screen Interval

253 Bottom of Screen

4' ~~257~~ Bottom of Borehole

DOUBLE-FORM PUCHACK.GPJ FEDERAL.GDT 6/28/00

Screen limited by depth reached by Rig and [illegible]

R. Walker USGS 8/3/00 @ 1400

DWR-138 M
11/98

New Jersey Department of Environmental Protection
Bureau of Water Allocation

MONITORING WELL RECORD

Well Permit No. 31 : 58531

Atlas Sheet Coordinates 31 : 02 536

OWNER IDENTIFICATION - Owner PENNSAUKEN TOWNSHIP
Address 5605 N. CRESCENT BLVD.
City PENNSAUKEN State NJ Zip Code

WELL LOCATION - If not the same as owner please give address: Owner's Well No. MW 30D
County CAMDEN Municipality PENNSAUKEN TWP Lot No. N/A Block No. N/A
Address CORBLT RD.

DATE WELL STARTED 7 / 20 / 00
DATE WELL COMPLETED 8 / 09 / 00

TYPE OF WELL (as per Well Permit Categories) MONITORING
Regulatory Program Requiring Well Case I.D.#

CONSULTING FIRM/FIELD SUPERVISOR (if applicable) CDM Federal Programs Tele. # 215-785-9123

WELL CONSTRUCTION

Total depth drilled 257 ft.
Well finished to 253 ft.

Borehole diameter:
Top 13 in.
Bottom 8 in.

Well was finished: ☐ above grade ☒ flush mounted

If finished above grade, casing height (stick up) above land surface ____ ft.

Was steel protective casing installed? ☒ Yes ☐ No

Static water level after drilling 53.4 ft.

Water level was measured using ULI

Well was developed for 7 hours at 10 gpm

Method of development Airlift/Submersible

Was permanent pumping equipment installed? ☐ Yes ☒ No

Pump capacity N/A gpm

Pump type: N/A

Drilling Fluid Bentonite Type of Rig F-1500

Health and Safety Plan submitted? ☒ Yes ☐ No

Level of Protection used on site (circle one) None (D) C B A

Note: Measure all depths from land surface	Depth to Top (ft.)	Depth to Bottom (ft.)	Diameter (inches)	Material	Wgt./Rating (lbs/sch no.)
Single/Inner Casing	0	248.5	4	PVC	40
Middle Casing (for triple cased wells only)					
Outer Casing (largest diameter)	0	195	8	Steel	40 3X lbs/ft
Open Hole or Screen (No. Used .010)	248.5	253.5	4	PVC	40
Blank Casings (No. Used)					
Tail Piece					
Gravel Pack	242.5	253	8	#1	500 #
Grout	0	195	13	Neat Cement	16,000 lbs.
	0	242.5	8	Bentonite	400 lbs.

Grouting Method Pressure Tremie
Drilling Method Mud Rotary

I certify that I have constructed the above referenced well in accordance with all well permit requirements and applicable State rules and regulations.

Drilling Company UNI-TECH, DRILLING
Well Driller (Print) Karl Hitzelberger
Driller's Signature [signature]
Registration No. M1530 Date 11/9/00

GEOLOGIC LOG

Note each depth where water was encountered in consolidated formations.

0-130 Grey to yellow sand with clay lenses
130-150 orange clay
150-155 MF sand
155-230 MC sand
230-257 Coarse sand & large gravel

COPIES: White - DEP Canary - Driller Pink - Owner Goldenrod - Health Dept.

THIS FORM MUST BE COMPLETED BY THE PERMITTEE OR HIS/HER AGENT

GROUND WATER MONITORING WELL CERTIFICATION - FORM B - LOCATION CERTIFICATION

Name of Permittee: U.S. Environmental Protection Agency
Name of Facility: Puchack Well Field Superfund Site
Location: Pennsauken Township, New Jersey
NJPDES Number:

LAND SURVEYOR'S CERTIFICATION

Well Permit Number (As assigned by NJDEP's Bureau of Water Allocation): 31-58581-
This number must be permanently affixed to the well casing.
Datum: NAD 1983 Horizontal - NGVD 1929 Vertical
Longitude (one-tenth of a second): West 75° 02' 25.0"
Latitude (one-tenth of a second): North 39° 58' 02.7"

North 413506.5'
East 340699.9'

Elevation of Top of Casing (cap off) (one-hundredth of a foot): WC = 35.31' IC = 35.06' GR= 35.31'
Owners Well Number (As shown on application or plans): MW-30D

BENCHMARK - NGS Monument "D 100"
GEOGRAPHIC POSITION - North 39° 58' 25"
West 75° 03' 37"
DATE OF SURVEY - June, 2001

ELEVATION - 44.55'

AUTHENTICATION

I certify under penalty of law that I have personally examined and am familiar with the information submitted in this document and all attachments and that, based on my inquiry of those individuals immediately responsible for obtaining the information, I believe the submitted information is true, accurate and complete. I am aware that there are significant penalties for submitting false information including the possibility of fine and imprisonment.

Paul J Emilius Jr.

PROFESSIONAL LAND SURVEYOR'S SIGNATURE

Paul J. Emilius, Jr.
PROFESSIONAL LAND SURVEYOR'S NAME
(Please print or type)

SEAL

New Jersey P.L.S. License No. 37186
PROFESSIONAL LAND SURVEYOR'S LICENSE #

The Department reserves the right in cases of violation of permit specified ground water limits or Ground Water Qu Standards (N.J.A.C. 7:9-6.1 et seq.) to require that wells be resurveyed to an accuracy of one-hundredth of a second latitu and longitude. This shall not be considered to be a major modification of the N.J.P.D.E.S. permit.

formb.doc

CDM Federal Programs Corporation

Double-Cased Monitoring Well

Client:	U.S. Environmental Protection Agency	Well No.:	MW 30I
Site Name:	Puchack Well Field (3220-002)	Location:	Wyndham &
Project Location:	Pennsauken, New Jersey	Drilling Date(s):	8-7-00 - 8-9-00
Drilling Contractor:	Uni-Tech Drilling Co.	Initial Water Level (ft. bgs):	
Drill Rig:	Failing 1500 (Paystar)	Geologist:	Lisa Campbell
Drilling Method:	Mud Rotary	North: East: Elevation (ft.amsl):	
		Depth to Bottom (ft. bgs):	160'

Annular Space Details

Type of Surface Seal:

Type of Annular Grout: Portland Cement / bentonite grout

Type of Seal: FilterPro #00 sand

Type of Filter Pack: FilterPro #1 Sand

Well Construction Materials

	Diameter	Type of Material
Screen	4"	PVC
Riser Casing	4"	PVC
Flush Mount Type		

Measurements

Outer Casing Depth (ft. bgs)	135'
Riser pipe length (ft)	145
Screen length (ft)	10'
Screen slot size (in)	0.010
Depth to water (ft. bgs)	
Depth to bedrock (ft. bgs)	

5' PVC tailpipe/Sump

Designed by: Dick Walker

Affiliation: USGS

REMARKS: (Outer casing for MW 30D 195')

Depths - (feet)

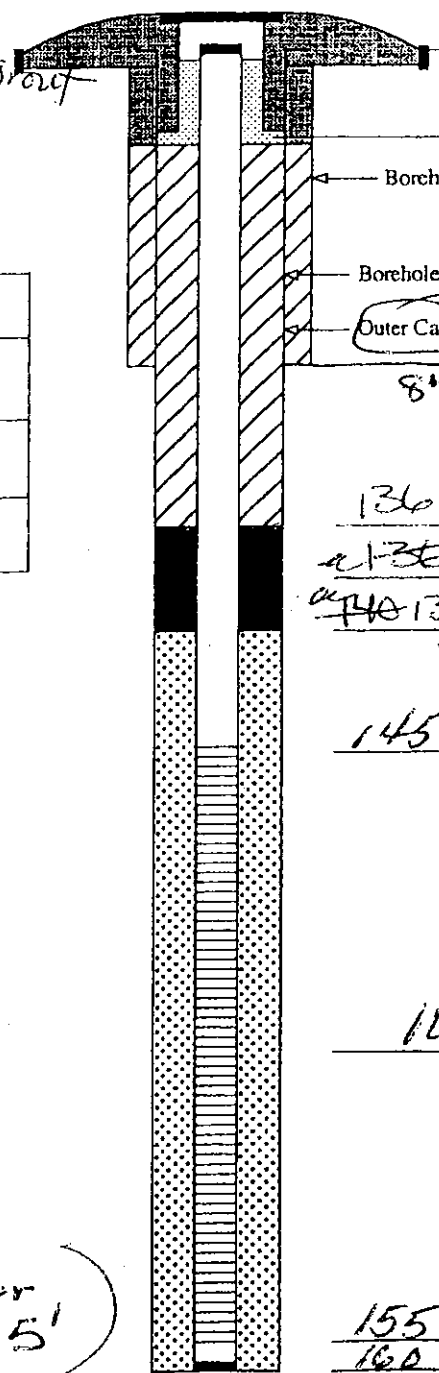

GROUND SURFACE

Sand

Borehole Diameter = 12"

Borehole Diameter = 8"

Outer Casing Type = Steel 135'

8"

136 Top of Seal

~~135~~ 3' Total Seal Interval

~~140~~ 139 Top of Sand

145' Top of Screen

10' Total Screen Interval

155 Bottom of Screen

160 Bottom of ~~Borehole~~ Well

R Walker 7/25/00

DOUBLE-FORM PUCHACK.GPJ FEDERAL.GDT 6/28/00

DWR-138 M
11/98

New Jersey Department of Environmental Protection
Bureau of Water Allocation

MONITORING WELL RECORD

Well Permit No. 31 - 58582

Atlas Sheet Coordinates 31 : 02 536

OWNER IDENTIFICATION - Owner PENNSAUKEN TOWNSHIP
Address 5605 N. CRESCENT BLVD.
City PENNSAUKEN State NJ Zip Code

WELL LOCATION - If not the same as owner please give address. Owner's Well No. MW 30 I
County CAMDEN Municipality PENNSAUKEN TWP Lot No. N/A Block No. N/A
Address CORBET RD.

DATE WELL STARTED 8 / 7 / 00
DATE WELL COMPLETED 8 / 29 / 00

TYPE OF WELL (as per Well Permit Categories) MONITORING
Regulatory Program Requiring Well Case I.D.#

CONSULTING FIRM/FIELD SUPERVISOR (if applicable) CDM Federal Programs Tele. # 212 785 9123

WELL CONSTRUCTION

Total depth drilled 165 ft.
Well finished to 160 ft.

Borehole diameter:
Top 13 in.
Bottom 8 in.

Well was finished: ☐ above grade ☒ flush mounted

If finished above grade, casing height (stick up) above land surface ____ ft.

Was steel protective casing installed? ☒ Yes ☐ No

Static water level after drilling 53.12 ft.

Water level was measured using WLI

Well was developed for 5 hours at 10 gpm

Method of development Airlift/Submersible

Was permanent pumping equipment installed? ☐ Yes ☒ No

Pump capacity N/A gpm

Pump type: N/A

Drilling Fluid Bentonite Type of Rig F-1500

Health and Safety Plan submitted? ☒ Yes ☐ No

Level of Protection used on site (circle one) None (D) C B A

Note: Measure all depths from land surface	Depth to Top (ft.)	Depth to Bottom (ft.)	Diameter (inches)	Material	Wgt./Rating (lbs/sch no.)
Single/Inner Casing	0	145	4	PVC	40
Middle Casing (for triple cased wells only)					
Outer Casing (largest diameter)	0	135	8	Steel	40 28 lbs/ft
Open Hole or Screen (No. Used 010)	145	155	4	PVC	40
Blank Casings (No. Used)					
Tail Piece	155	160	4	PVC	40
Gravel Pack	139	160	8	#1	800 #
Grout	0	135	13	Neat Cement	10500 lbs.
	0	139	8	Bentonite	____ lbs.

Grouting Method Pressure Tremie
Drilling Method Mud Rotary

GEOLOGIC LOG

Note each depth where water was encountered in consolidated formations.

0-130 gray & yellow sand w/ clay lenses
130-147 orange clay
147-155 MF sand
155-157 MC sand

I certify that I have constructed the above referenced well in accordance with all well permit requirements and applicable State rules and regulations.

Drilling Company UNI-TECH DRILLING
Well Driller (Print) Karl Hitzelberger
Driller's Signature Karl Hitzelberger
Registration No. M1530 Date 9/6/01

COPIES: White - DEP Canary - Driller Pink - Owner Goldenrod - Health Dept.

THIS FORM MUST BE COMPLETED BY THE PERMITTEE OR HIS/HER AGENT

GROUND WATER MONITORING WELL CERTIFICATION - FORM B - LOCATION CERTIFICATION

Name of Permittee: U.S. Environmental Protection Agency
Name of Facility: Puchack Well Field Superfund Site
Location: Pennsauken Township, New Jersey
NJPDES Number:

LAND SURVEYOR'S CERTIFICATION

Well Permit Number (As assigned by NJDEP's Bureau of Water Allocation): 31-58582-
This number must be permanently affixed to the well casing.
Datum: NAD 1983 Horizontal - NGVD 1929 Vertical
Longitude (one-tenth of a second): West 75° 02' 25.2"
Latitude (one-tenth of a second): North 39° 58' 02.9"

North 413521.8'
East 340689.8'

Elevation of Top of Casing (cap off) (one-hundredth of a foot): WC = 35.18' IC = 34.92' GR= 35.18'
Owners Well Number (As shown on application or plans): MW-30I

BENCHMARK - NGS Monument "D 100" **ELEVATION** - 44.55'
GEOGRAPHIC POSITION - North 39° 58' 25"
West 75° 03' 37"
DATE OF SURVEY - June, 2001

AUTHENTICATION

I certify under penalty of law that I have personally examined and am familiar with the information submitted in this document and all attachments and that, based on my inquiry of those individuals immediately responsible for obtaining the information, I believe the submitted information is true, accurate and complete. I am aware that there are significant penalties for submitting false information including the possibility of fine and imprisonment.

Paul J Emilius Jr.

PROFESSIONAL LAND SURVEYOR'S SIGNATURE

Paul J. Emilius, Jr.
PROFESSIONAL LAND SURVEYOR'S NAME
(Please print or type)

SEAL

New Jersey P.L.S. License No. 37186
PROFESSIONAL LAND SURVEYOR'S LICENSE #

The Department reserves the right in cases of violation of permit specified ground water limits or Ground Water Qu Standards (N.J.A.C. 7:9-6.1 et seq.) to require that wells be resurveyed to an accuracy of one-hundredth of a second lat. and longitude. This shall not be considered to be a major modification of the N.J.P.D.E.S. permit.

formb.doc

CDM Federal Programs Corporation

Single-Cased Monitoring Well

Client: U.S. Environmental Protection Agency
Site Name: Puchack Well Field (3220-002)
Project Location: Pennsauken, New Jersey
Drilling Contractor: Uni-Tech Drilling Co.
Drill Rig: Failing 1500
Drilling Method: Mud Rotary

Well No.: MW-30S
Location: Corbett & Wyndham
Drilling Date(s): 1/12-15/01
Initial Water Level (ft. bgs):
Geologist: M. Akbar
North: East: Elevation (ft.amsl):
Depth to Bottom (ft. bgs): 100'

Annular Space Details

Type of Surface Seal:
Type of Annular Grout: Portland Type II Cement/Bentonite
Type of Seal: Filter Pro No. 00 Sand
Type of Filter Pack: Filter Pro No. 1 Sand
Type of Backfill: Filter Pro No. 1 Sand

Well Construction Materials

	Diameter	Type of Material
Screen	4"	PVC SCH 40
Riser Casing	4"	PVC SCH 40
Flush Mount Type		

Measurements

Riser pipe length (ft)	85
Screen length (ft)	10
Screen slot size (in)	0.010
Depth to water (ft. bgs)	
Depth to bedrock (ft. bgs)	

Designed by: DICK WALKER
Affiliation: USGS

REMARKS:

NOT TO SCALE

Depths - (feet below ground surface)

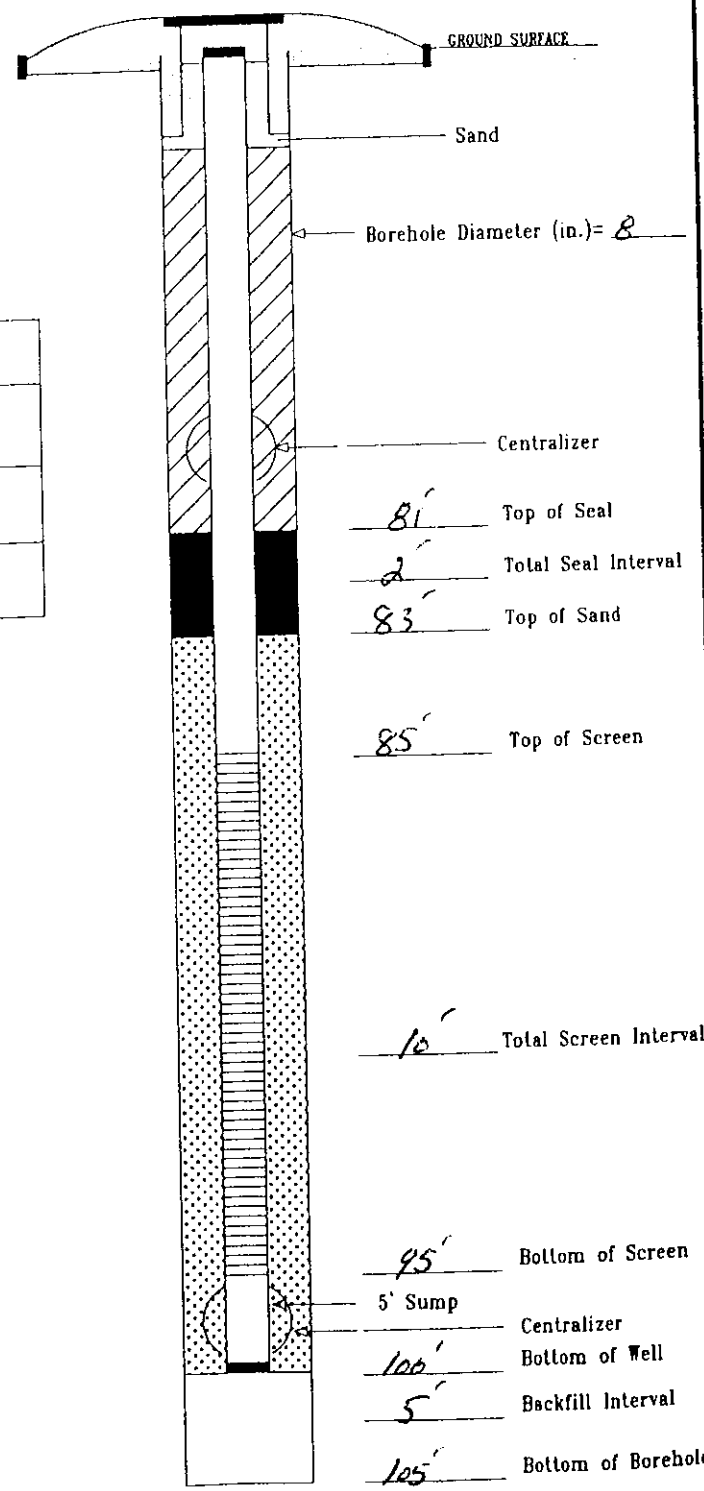

SINGLE-FORM PUCHACK.GPJ FEDERAL.GDT 6/28/00

DWR-138 M
11/98

New Jersey Department of Environmental Protection
Bureau of Water Allocation

MONITORING WELL RECORD

Well Permit No. 31 59712

Atlas Sheet Coordinates 31 02 536

PENNSAUKEN TOWNSHIP

OWNER IDENTIFICATION - Owner
Address 5605 N CRESCENT BLVD
City PENNSAUKEN State N.J Zip Code

WELL LOCATION - If not the same as owner please give address. Owner's Well No. MW 30S
County CAMDEN Municipality PENNSAUKEN TWP Lot No. N/A Block No. N/A
Address CORBETT RD

DATE WELL STARTED 1/12/01
DATE WELL COMPLETED 1/15/01

TYPE OF WELL (as per Well Permit Categories) MONITORING Case I.D.#
Regulatory Program Requiring Well

CONSULTING FIRM/FIELD SUPERVISOR (if applicable) CDM Federal Programs Tele. # 212 785-9123

WELL CONSTRUCTION

Total depth drilled 105 ft.
Well finished to 100 ft.

Borehole diameter:
Top 8 in.
Bottom 8 in.

Well was finished: ☐ above grade ☒ flush mounted

If finished above grade, casing height (stick up) above land surface ____ ft.

Was steel protective casing installed? ☒ Yes ☐ No

Static water level after drilling 4.16 ft.

Water level was measured using M Scope

Well was developed for 4 hours at 25 gpm

Method of development AIR Lift

Was permanent pumping equipment installed? ☐ Yes ☒ No

Pump capacity NA gpm

Pump type: NA

Drilling Fluid Bentonite Type of Rig Failing 1500

Health and Safety Plan submitted? ☒ Yes ☐ No

Level of Protection used on site (circle one) None D C B A

Note: Measure all depths from land surface	Depth to Top (ft.)	Depth to Bottom (ft.)	Diameter (inches)	Material	Wgt./Rating (lbs/sch no.)
Single/Inner Casing	0	85	4"	PVC	Sch 40
Middle Casing (for triple cased wells only)					
Outer Casing (largest diameter)					
Open Hole or Screen (No. Used 1010)	85	95	4"	PVC	Sch 40
Blank Casings (No. Used)					
Tail Piece					
Gravel Pack	81	105	8"	#1 Sand	
Grout	0	81		Neat Cement / Bentonite	100 lbs / 50 lbs

Grouting Method pressure Tremie
Drilling Method mud Rotary

GEOLOGIC LOG

Note each depth where water was encountered in consolidated formations.

0-50 gray and yellow sand
50/105 mc Sand

I certify that I have constructed the above referenced well in accordance with all well permit requirements and applicable State rules and regulations.

Drilling Company UNI-TECH DRILLING
Well Driller (Print) Karl Hitzelberger
Driller's Signature Karl Hitzelberger
Registration No. M1530 Date 3/16/01

COPIES: White - DEP Canary - Driller Pink - Owner Goldenrod - Health Dept.

THIS FORM MUST BE COMPLETED BY THE PERMITTEE OR HIS/HER AGENT

GROUND WATER MONITORING WELL CERTIFICATION - FORM B - LOCATION CERTIFICATION

Name of Permittee: U.S. Environmental Protection Agency
Name of Facility: Puchack Well Field Superfund Site
Location: Pennsauken Township, New Jersey
NJPDES Number:

LAND SURVEYOR'S CERTIFICATION

Well Permit Number (As assigned by NJDEP's Bureau of Water Allocation): 31-59712-
This number must be permanently affixed to the well casing.
Datum: NAD 1983 Horizontal - NGVD 1929 Vertical
Longitude (one-tenth of a second): West 75° 02' 25.3"
Latitude (one-tenth of a second): North 39° 58' 03.0"

North 413536.3'
East 340679.2'

Elevation of Top of Casing (cap off) (one-hundredth of a foot): WC = 35.14' IC = 34.88' GR= 35.14'
Owners Well Number (As shown on application or plans): MW-30S

BENCHMARK - NGS Monument "D 100" **ELEVATION** - 44.55'
GEOGRAPHIC POSITION - North 39° 58' 25"
West 75° 03' 37"
DATE OF SURVEY - June, 2001

AUTHENTICATION

I certify under penalty of law that I have personally examined and am familiar with the information submitted in this document and all attachments and that, based on my inquiry of those individuals immediately responsible for obtaining the information, I believe the submitted information is true, accurate and complete. I am aware that there are significant penalties for submitting false information including the possibility of fine and imprisonment.

Paul J Emilius Jr.

PROFESSIONAL LAND SURVEYOR'S SIGNATURE

Paul J. Emilius, Jr.
PROFESSIONAL LAND SURVEYOR'S NAME
(Please print or type)

SEAL

New Jersey P.L.S. License No. 37186
PROFESSIONAL LAND SURVEYOR'S LICENSE #

The Department reserves the right in cases of violation of permit specified ground water limits or Ground Water Qu Standards (N.J.A.C. 7:9-6.1 et seq.) to require that wells be resurveyed to an accuracy of one-hundredth of a second lat and longitude. This shall not be considered to be a major modification of the N.J.P.D.E.S. permit.

formb.doc

CDM Federal Programs Corporation

Double-Cased Monitoring Well

Client:	U.S. Environmental Protection Agency	Well No.:	MW 31-D
Site Name:	Puchack Well Field (3220-002)	Location:	Rt 130 & Sackel Hwy.
Project Location:	Pennsauken, New Jersey	Drilling Date(s):	12/5/00 - 12/12/00
Drilling Contractor:	Uni-Tech Drilling Co.	Initial Water Level (ft. bgs):	
Drill Rig:	Failing 1500	Geologist:	L. Campbell
Drilling Method:	mud rotary	North: East:	Elevation (ft.amsl):
		Depth to Bottom (ft. bgs):	~~242~~ 228'

Annular Space Details

Type of Surface Seal:

Type of Annular Grout: Portland Type II cement/bentonite

Type of Seal: Filter Pro #00 sand

Type of Filter Pack: Filter Pro #1 sand

Type of Backfill: natural materials (borehole collapse/ swelling clay)

Well Construction Materials

	Diameter	Type of Material
Screen	4"	Sch 40 PVC ~~0.010 slot~~
Riser Casing	4"	Sch. 40 PVC
Flush Mount Type		

Measurements

Outer Casing Depth (ft. bgs)	170'
Riser pipe length (ft)	213'
Screen length (ft)	10'
Screen slot size (in)	0.010
Depth to water (ft. bgs)	
Depth to bedrock (ft. bgs)	

Designed by:

Affiliation:

REMARKS:

R.C. Walker 12/11/00

changes per discussions w/ D. Walker on 12.12.00

NOT TO SCALE

Depths - (feet below ground surface)

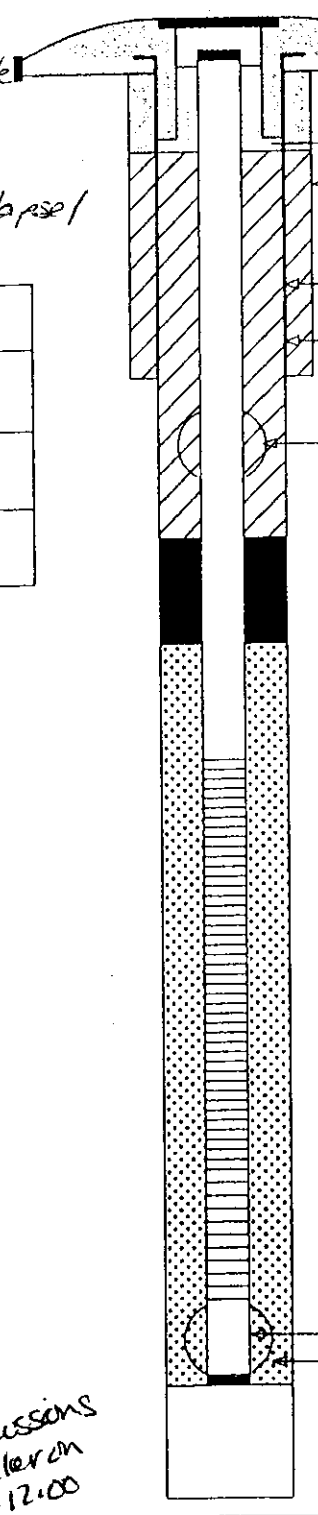

GROUND SURFACE

Sand

Borehole Diameter (in.) = ~~8~~ 12

Borehole Diameter (in.) = ~~4~~ 8

Outer Casing Type = 8" steel

170

Centralizer

209 Top of Seal

2' Total Seal Interval

211 Top of Sand

~~220~~ 213 ee Top of Screen

10 Total Screen Interval

~~230~~ 223' ee Bottom of Screen

5' Sump

Centralizer

~~230~~ 228' ee Bottom of Well

Backfill Interval

242 Bottom of Borehole

(cave-in / clay swelling)

DOUBLE-FORM PUCRACK.CP1 FEDERAL.CDT 6/28/00

DWR-138M
11/98

New Jersey Department of Environmental Protection
Bureau of Water Allocation

MONITORING WELL RECORD

Well Permit No. 31 - 22528

Atlas Sheet Coordinates 31 02 296

OWNER IDENTIFICATION - Owner NJDOT-REGIONAL OPERATIONS
Address ROUTE 70 & NJ TURNPIKE
City CHERRY HILL State NJ Zip Code

WELL LOCATION - If not the same as owner please give address. Owner's Well No. MW 31 PID
County CAMDEN Municipality PENNSAUKEN TWP Lot No. 1 Block No. 2503
Address ROUTE 130

DATE WELL STARTED 12/5/00
DATE WELL COMPLETED 12/12/00

TYPE OF WELL (as per Well Permit Categories) MONITORING
Regulatory Program Requiring Well Case I.D.#

CONSULTING FIRM/FIELD SUPERVISOR (if applicable) Uni Federal Programs Tele. # 212-785-9123

WELL CONSTRUCTION

Total depth drilled 242 ft.
Well finished to 238 ft.

Borehole diameter:
Top 12 in.
Bottom 8 in.

Well was finished: ☐ above grade ☒ flush mounted

If finished above grade, casing height (stick up) above land surface ____ ft.

Was steel protective casing installed? ☒ Yes ☐ No

Static water level after drilling 59.93 ft.

Water level was measured using M Scope

Well was developed for 4 hours at 25 gpm

Method of development Submersible

Was permanent pumping equipment installed? ☐ Yes ☒ No

Pump capacity NA gpm

Pump type: NA

Drilling Fluid Bentonite Type of Rig Failing 1500

Health and Safety Plan submitted? ☒ Yes ☐ No

Level of Protection used on site (circle one) None (D) C B A

Note: Measure all depths from land surface	Depth to Top (ft.)	Depth to Bottom (ft.)	Diameter (inches)	Material	Wgt./Rating (lbs/sch no.)
Single/Inner Casing	0	213	4"	PVC	Sch 40
Middle Casing (for triple cased wells only)					
Outer Casing (largest diameter)	0	170	8"	Steel	Sch 40
Open Hole or Screen (No. Used .010)	213	223	4"	PVC	Sch 40
Blank Casings (No. Used)					
Tail Piece					
Gravel Pack	209	242		#1 morie	
Grout	0 0	170 209		Neat Cement Bentonite	16600 lbs. 500 lbs.

Grouting Method Pressure Tremie
Drilling Method Mud Rotary

GEOLOGIC LOG

Note each depth where water was encountered in consolidated formations.

0-12 brown sand
12-48 red and white clay
48-84 yellow sand
84-124 large gravel and sand
124-204 red and wh. clay
204-242 Gravel, chaffer m-c grained

I certify that I have constructed the above referenced well in accordance with all well permit requirements and applicable State rules and regulations.

Drilling Company UNI-TECH DRILLING
Well Driller (Print) Karl Hitzelberger
Driller's Signature Karl Hitzelberger
Registration No. M1530 Date 9/6/01

COPIES: White - DEP Canary - Driller Pink - Owner Goldenrod - Health Dept.

THIS FORM MUST BE COMPLETED BY THE PERMITTEE OR HIS/HER AGENT

GROUND WATER MONITORING WELL CERTIFICATION - FORM B - LOCATION CERTIFICATION

Name of Permittee: U.S. Environmental Protection Agency
Name of Facility: Puchack Well Field Superfund Site
Location: Pennsauken Township, New Jersey
NJPDES Number:

LAND SURVEYOR'S CERTIFICATION

Well Permit Number (As assigned by NJDEP's Bureau of Water Allocation): 31-59528-
This number must be permanently affixed to the well casing.
Datum: NAD 1983 Horizontal - NGVD 1929 Vertical
Longitude (one-tenth of a second): West 75° 02' 05.1"
Latitude (one-tenth of a second): North 39° 58' 30.1"

North 416267.8'
East 342264.3'

Elevation of Top of Casing (cap off) (one-hundredth of a foot): WC = 44.57' IC = 44.22' GR= 44.55'
Owners Well Number (As shown on application or plans): MW-31D

BENCHMARK - NGS Monument "D 100"
GEOGRAPHIC POSITION - North 39° 58' 25"
West 75° 03' 37"
DATE OF SURVEY - June, 2001

ELEVATION - 44.55'

AUTHENTICATION

I certify under penalty of law that I have personally examined and am familiar with the information submitted in this document and all attachments and that, based on my inquiry of those individuals immediately responsible for obtaining the information, I believe the submitted information is true, accurate and complete. I am aware that there are significant penalties for submitting false information including the possibility of fine and imprisonment.

Paul J Emilius Jr.

PROFESSIONAL LAND SURVEYOR'S SIGNATURE

Paul J. Emilius, Jr.
PROFESSIONAL LAND SURVEYOR'S NAME
(Please print or type)

SEAL

New Jersey P.L.S. License No. 37186
PROFESSIONAL LAND SURVEYOR'S LICENSE #

The Department reserves the right in cases of violation of permit specified ground water limits or Ground Water Qu Standards (N.J.A.C. 7:9-6.1 et seq.) to require that wells be resurveyed to an accuracy of one-hundredth of a second lat and longitude. This shall not be considered to be a major modification of the N.J.P.D.E.S. permit.

formb.doc

CDM Federal Programs Corporation

Double-Cased Monitoring Well

Client:	U.S. Environmental Protection Agency	Well No.:	MW-31 I
Site Name:	Puchack Well Field (3220-002)	Location:	Rt. 130 & Swedesboro Hwy
Project Location:	Pennsauken, New Jersey	Drilling Date(s):	~~12/5 - 12/11~~ 12/13/00 12/15/
Drilling Contractor:	Uni-Tech Drilling Co.	Initial Water Level (ft. bgs):	
Drill Rig:	Failing CF1500	Geologist:	L Campbell
Drilling Method:	Mud Rotary	North: East: Elevation (ft.amsl):	
		Depth to Bottom (ft. bgs):	155

Annular Space Details

Type of Surface Seal:

Type of Annular Grout: Portland Type II cement/bentonite

Type of Seal: Filter Pro #00 sand

Type of Filter Pack: Filter Pro #1 sand

Type of Backfill: Filter Pro #1 sand

Well Construction Materials

	Diameter	Type of Material
Screen	4"	Sch 40 PVC
Riser Casing	4"	Sch 40 PVC
Flush Mount Type		

Measurements

Outer Casing Depth (ft. bgs)	120'
Riser pipe length (ft)	140'
Screen length (ft)	10'
Screen slot size (in)	0.010
Depth to water (ft. bgs)	
Depth to bedrock (ft. bgs)	

Designed by:

Affiliation:

REMARKS:

RLWalker 12/14/00

NOT TO SCALE

Depths - (feet below ground surface)

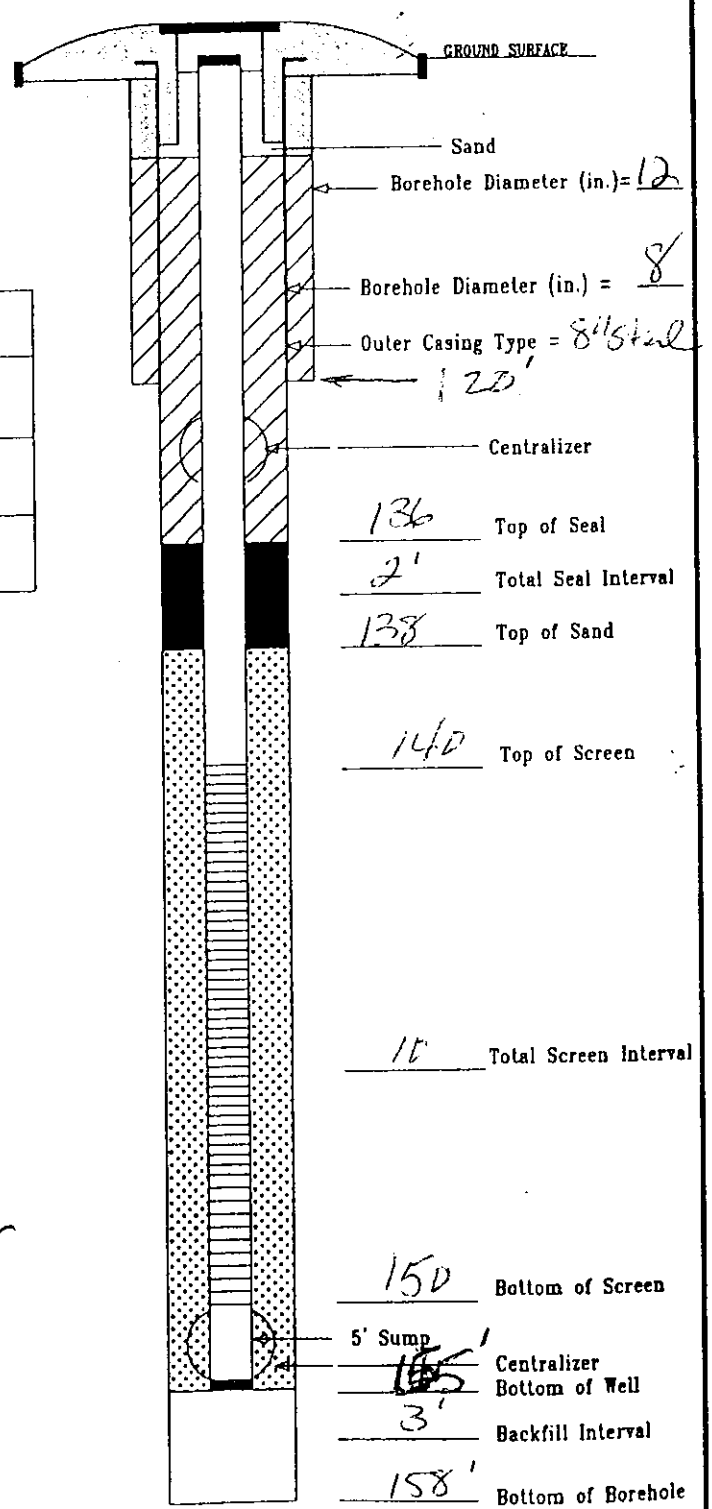

DOUBLE-FORM PUCHACK.GPJ FEDERAL.GDT 6/23/00

DWR-138 M
11/98

New Jersey Department of Environmental Protection
Bureau of Water Allocation

MONITORING WELL RECORD

Well Permit No. 31 - 52529

Atlas Sheet Coordinates 31 - 02 - 296

OWNER IDENTIFICATION - Owner NJDOT-REGIONAL OPERATIONS
Address ROUTE 70 & NJ TURNPIKE
City CHERRY HILL State NJ Zip Code

WELL LOCATION - If not the same as owner please give address. Owner's Well No. MW31I
County CAMDEN Municipality PENNSAUKEN TWP Lot No. 1 Block No. 2505
Address ROUTE 130

DATE WELL STARTED 12/13/00
DATE WELL COMPLETED 12/15/00

TYPE OF WELL (as per Well Permit Categories) MONITORING Case I.D.#
Regulatory Program Requiring Well

CONSULTING FIRM/FIELD SUPERVISOR (if applicable) CDM Federal Programs Tele. # 212-785-9123

WELL CONSTRUCTION

Total depth drilled 158 ft.
Well finished to 155 ft.

Borehole diameter:
Top 12 in.
Bottom 8 in.

Well was finished: ☐ above grade ☒ flush mounted

If finished above grade, casing height (stick up) above land surface 0 ft.

Was steel protective casing installed? ☒ Yes ☐ No

Static water level after drilling 6.21 ft.

Water level was measured using M. Scope

Well was developed for 4 hours at 25 gpm

Method of development Air Lift

Was permanent pumping equipment installed? ☐ Yes ☒ No

Pump capacity NA gpm

Pump type: NA

Drilling Fluid Bentonite Type of Rig Failing 1500

Health and Safety Plan submitted? ☒ Yes ☐ No

Level of Protection used on site (circle one) None (D) C B A

Note: Measure all depths from land surface	Depth to Top (ft.)	Depth to Bottom (ft.)	Diameter (inches)	Material	Wgt./Ratings (lbs/sch no.)
Single/Inner Casing	0	140	4"	PVC	Sch 40
Middle Casing (for triple cased wells only)					
Outer Casing (largest diameter)	0	120	8"	Steel	Sch 40
Open Hole or Screen (No. Used .010)	140	150	4"	PVC	Sch 40
Blank Casings (No. Used)					
Tail Piece					
Gravel Pack	136	158	8"	Hi Sand	
Grout	0 0	120 136		Neat Cement Bentonite	1500 lbs. 275 lbs.

Grouting Method Pressure Tremie
Drilling Method Mud Rotary

I certify that I have constructed the above referenced well in accordance with all well permit requirements and applicable State rules and regulations.

Drilling Company UNI-TECH DRILLING
Well Driller (Print) Karl Hitzelberger
Driller's Signature Karl Hitzelberger
Registration No. M1530 Date 7/6/01

GEOLOGIC LOG

Note each depth where water was encountered in consolidated formations.

0-25 gray and yellow sand
25-50 clay
50-158 mk sand

COPIES: White - DEP Canary - Driller Pink - Owner Goldenrod - Health Dept.

THIS FORM MUST BE COMPLETED BY THE PERMITTEE OR HIS/HER AGENT

GROUND WATER MONITORING WELL CERTIFICATION - FORM B - LOCATION CERTIFICATION

Name of Permittee: U.S. Environmental Protection Agency
Name of Facility: Puchack Well Field Superfund Site
Location: Pennsauken Township, New Jersey
NJPDES Number:

LAND SURVEYOR'S CERTIFICATION

Well Permit Number (As assigned by NJDEP's Bureau of Water Allocation): 31-59529-
This number must be permanently affixed to the well casing.
Datum: NAD 1983 Horizontal - NGVD 1929 Vertical
Longitude (one-tenth of a second): West 75° 02' 05.1"
Latitude (one-tenth of a second): North 39° 58' 30.2"

North 416276.6'
East 342264.9'

Elevation of Top of Casing (cap off) (one-hundredth of a foot): WC = 44.84' IC = 44.62' GR= 44.82'
Owners Well Number (As shown on application or plans): MW-31I

BENCHMARK - NGS Monument "D 100" **ELEVATION** - 44.55'
GEOGRAPHIC POSITION - North 39° 58' 25"
West 75° 03' 37"
DATE OF SURVEY - June, 2001

AUTHENTICATION

I certify under penalty of law that I have personally examined and am familiar with the information submitted in this document and all attachments and that, based on my inquiry of those individuals immediately responsible for obtaining the information, I believe the submitted information is true, accurate and complete. I am aware that there are significant penalties for submitting false information including the possibility of fine and imprisonment.

Paul J Emilius Jr.

PROFESSIONAL LAND SURVEYOR'S SIGNATURE

Paul J. Emilius, Jr.
PROFESSIONAL LAND SURVEYOR'S NAME
(Please print or type)

SEAL

New Jersey P.L.S. License No. 37186
PROFESSIONAL LAND SURVEYOR'S LICENSE #

The Department reserves the right in cases of violation of permit specified ground water limits or Ground Water Qu Standards (N.J.A.C. 7:9-6.1 et seq.) to require that wells be resurveyed to an accuracy of one-hundredth of a second lat. and longitude. This shall not be considered to be a major modification of the N.J.P.D.E.S. permit.

formb.doc

CDM Federal Programs Corporation

~~Double~~ Single-Cased Monitoring Well

Client:	U.S. Environmental Protection Agency	Well No.:	PM 31-M
Site Name:	Puchack Well Field (3220-002)	Location:	Rt 130 & Sunset Ave
Project Location:	Pennsauken, New Jersey	Drilling Date(s):	10/18/00
Drilling Contractor:	Uni-Tech Drilling Co.	Initial Water Level (ft. bgs):	
Drill Rig:	Failing CF150	Geologist:	Lisa Campbell
Drilling Method:	Mud Rotary	North: East: Elevation (ft.amsl):	
		Depth to Bottom (ft. bgs):	

Annular Space Details

Type of Surface Seal:

Type of Annular Grout: Portland Type II cement + bentonite

Type of Seal: Filter Pro #00 Sand

Type of Filter Pack: Filter Pro #1 Sand

Type of Backfill: Filter Pro #1 Sand

Well Construction Materials

	Diameter	Type of Material
Screen	4"	Sch 40 PVC
Riser Casing	4"	Sch 40 PVC
Flush Mount Type		

Measurements

Outer Casing Depth (ft. bgs)	—
Riser pipe length (ft)	82'
Screen length (ft)	10'
Screen slot size (in)	0.010
Depth to water (ft. bgs)	
Depth to bedrock (ft. bgs)	

Designed by:

Affiliation:

REMARKS:

12/11/00

NOT TO SCALE

Depths - (feet below ground surface)

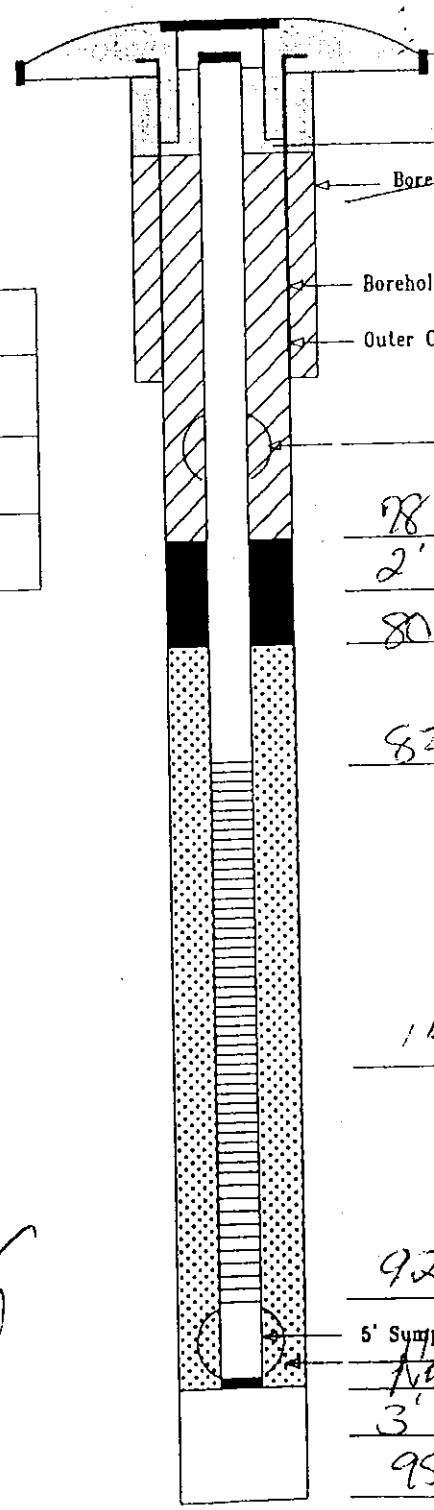

GROUND SURFACE

Sand

~~Borehole Diameter (in.)=~~

Borehole Diameter (in.) = 8

Outer Casing Type = None

Centralizer

78' Top of Seal

2' Total Seal Interval

80 Top of Sand

82' Top of Screen

10 Total Screen Interval

92' Bottom of Screen

5' Sump

None Centralizer

92 Bottom of Well

3' Backfill Interval

95 Bottom of Borehole

DOUBLE-FORM PUCHACK.CPJ FEDERAL.CDT 6/28/00

DWR-138M
11/98

New Jersey Department of Environmental Protection
Bureau of Water Allocation

MONITORING WELL RECORD

Well Permit No. 31 - 52530

Atlas Sheet Coordinates 31 : 02 226

OWNER IDENTIFICATION - Owner NJDOT-REGIONAL OPERATIONS
Address ROUTE 70 & NJ TURNPIKE
City CHERRY HILL State NJ Zip Code

WELL LOCATION - If not the same as owner please give address. Owner's Well No. MW 31 M
County CAMDEN Municipality PENNSAUKEN TWP Lot No. 1 Block No. 2503
Address ROUTE 130

DATE WELL STARTED 12/18/00
DATE WELL COMPLETED 12/18/00

TYPE OF WELL (as per Well Permit Categories) MONITORING Case I.D.#
Regulatory Program Requiring Well

CONSULTING FIRM/FIELD SUPERVISOR (if applicable) CDM Federal Programs Tele # 212 785-9123

WELL CONSTRUCTION

Total depth drilled 95 ft.
Well finished to 92 ft.

Borehole diameter: Top 8 in. Bottom 8 in.

Well was finished: ☐ above grade ☒ flush mounted

If finished above grade, casing height (stick up) above land surface ____ ft.

Was steel protective casing installed? ☒ Yes ☐ No

Static water level after drilling 54.03 ft.

Water level was measured using M.Scope

Well was developed for 4 hours at 35 gpm

Method of development Airlift

Was permanent pumping equipment installed? ☐ Yes ☒ No

Pump capacity NA gpm

Pump type: NA

Drilling Fluid Bentonite Type of Rig Failing 1500

Health and Safety Plan submitted? ☒ Yes ☐ No

Level of Protection used on site (circle one) None D C B A

Note: Measure all depths from land surface	Depth to Top (ft.)	Depth to Bottom (ft.)	Diameter (inches)	Material	Wgt./Rating (lbs/sch no.)
Single/Inner Casing	0	82	4"	PVC	Sch 40
Middle Casing (for triple cased wells only)					
Outer Casing (largest diameter)	5				
Open Hole or Screen (No. Used .010)	82	92	4"	PVC	Sch 40
Blank Casings (No. Used)					
Tail Piece					
Gravel Pack	78	95	8	#1 Sand	
Grout	0	78		Neat Cement / Bentonite	100 lbs. / 50 lbs.

Grouting Method Pressure Tremie
Drilling Method Mud Rotary

GEOLOGIC LOG

Note each depth where water was encountered in consolidated formations.

0-20 gray and yellow sand
20-50 Clay
50-95 Mc Sand

I certify that I have constructed the above referenced well in accordance with all well permit requirements and applicable State rules and regulations.

Drilling Company UNI-TECH DRILLING
Well Driller (Print) Karl Hitzelberger
Driller's Signature Karl Hitzelberger
Registration No. M1530 Date 9/6/01

COPIES: White - DEP Canary - Driller Pink - Owner Goldenrod - Health Dept.

THIS FORM MUST BE COMPLETED BY THE PERMITTEE OR HIS/HER AGENT

GROUND WATER MONITORING WELL CERTIFICATION - FORM B - LOCATION CERTIFICATION

Name of Permittee: U.S. Environmental Protection Agency
Name of Facility: Puchack Well Field Superfund Site
Location: Pennsauken Township, New Jersey
NJPDES Number:

LAND SURVEYOR'S CERTIFICATION

Well Permit Number (As assigned by NJDEP's Bureau of Water Allocation): 31-59530-
This number must be permanently affixed to the well casing.
Datum: NAD 1983 Horizontal - NGVD 1929 Vertical
Longitude (one-tenth of a second): West 75° 02' 05.2"
Latitude (one-tenth of a second): North 39° 58' 30.3"

North 416284.6'
East 342258.0'

Elevation of Top of Casing (cap off) (one-hundredth of a foot): WC = 44.99' IC = 44.63' GR= 44.97'
Owners Well Number (As shown on application or plans): MW-31M

BENCHMARK - NGS Monument "D 100"
GEOGRAPHIC POSITION - North 39° 58' 25"
West 75° 03' 37"
DATE OF SURVEY - June, 2001

ELEVATION - 44.55'

AUTHENTICATION

I certify under penalty of law that I have personally examined and am familiar with the information submitted in this document and all attachments and that, based on my inquiry of those individuals immediately responsible for obtaining the information, I believe the submitted information is true, accurate and complete. I am aware that there are significant penalties for submitting false information including the possibility of fine and imprisonment.

Paul J Emilius Jr.

PROFESSIONAL LAND SURVEYOR'S SIGNATURE

Paul J. Emilius, Jr.
PROFESSIONAL LAND SURVEYOR'S NAME
(Please print or type)

SEAL

New Jersey P.L.S. License No. 37186
PROFESSIONAL LAND SURVEYOR'S LICENSE #

The Department reserves the right in cases of violation of permit specified ground water limits or Ground Water Qu Standards (N.J.A.C. 7:9-6.1 et seq.) to require that wells be resurveyed to an accuracy of one-hundredth of a second lati and longitude. This shall not be considered to be a major modification of the N.J.P.D.E.S. permit.

formb.doc

CDM Federal Programs Corporation

Double-Cased Monitoring Well

Client:	U.S. Environmental Protection Agency	Well No.:	MW-34D
Site Name:	Puchack Well Field (3220-002)	Location:	Rt 130 & Prince
Project Location:	Pennsauken, New Jersey	Drilling Date(s):	1/16/01 - 1/~~26~~ 29/01
Drilling Contractor:	Uni-Tech Drilling Co.	Initial Water Level (ft. bgs):	
Drill Rig:	FAILING 1500	Geologist:	M AKBAR
Drilling Method:	MUD ROTARY	North: East:	Elevation (ft.amsl):
		Depth to Bottom (ft. bgs):	233

Annular Space Details

Type of Surface Seal:

Type of Annular Grout: Portland Type II CEMENT/BENTONITE

Type of Seal: Filter Pro NO. 00 SAND

Type of Filter Pack: Filter Pro NO. 1 SAND

Type of Backfill: see remarks

Well Construction Materials

	Diameter	Type of Material
Screen	4"	PVC SCH 40
Riser Casing	4"	PVC SCH 40
Flush Mount Type		

Measurements

Outer Casing Depth (ft. bgs)	183
Riser pipe length (ft)	218
Screen length (ft)	10
Screen slot size (in)	0.010
Depth to water (ft. bgs)	
Depth to bedrock (ft. bgs)	

Designed by: DICK WALKER

Affiliation: USGS

R E Walker 1/26/01

REMARKS:

backfill:

233-246: Filter Pro #1 Sand

246-257: natural backfill (borehole collapse.

Depths - (feet)

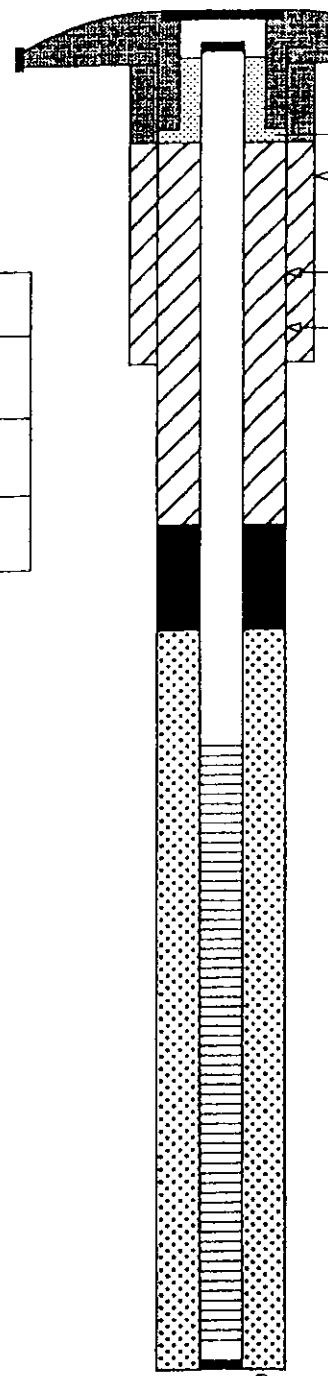

GROUND SURFACE

Sand

Borehole Diameter = 12"

Borehole Diameter = 8"

Outer Casing Type = 8" steel

183'

212' Top of Seal

3' Total Seal Interval

215' Top of Sand

218 Top of Screen

10' Total Screen Interval

228 Bottom of Screen

233' Bottom of ~~Borehole~~ Well

5' Sump. 34' Backfill Interval

257 Bottom of Bore

DOUBLE-FORM PUCHACK.GPJ FEDERAL.GDT 6/28/00

DWR-138M
11/98

New Jersey Department of Environmental Protection
Bureau of Water Allocation

MONITORING WELL RECORD

Well Permit No. 31 - 59809

Atlas Sheet Coordinates 31 02 297

OWNER IDENTIFICATION - Owner PENNSAUKEN TOWNSHIP
Address 5605 N. CRESCENT BLVD.
City PENNSAUKEN State NJ Zip Code

WELL LOCATION - If not the same as owner please give address. Owner's Well No. MW 34D
County CAMDEN Municipality PENNSAUKEN TWP Lot No. 2 Block No. 2302
Address PRINCE AVENUE
DATE WELL STARTED 1/16/01
DATE WELL COMPLETED 1/21/01

TYPE OF WELL (as per Well Permit Categories) MONITORING Case I.D.#
Regulatory Program Requiring Well
CONSULTING FIRM/FIELD SUPERVISOR (if applicable) CDM Federal Programs Tele.# 212-785-9123

WELL CONSTRUCTION

Total depth drilled 257 ft.
Well finished to 233 ft.

Borehole diameter:
Top 12 in.
Bottom 8 in.

Well was finished: ☐ above grade ☒ flush mounted

If finished above grade, casing height (stick up) above land surface ____ ft.

Was steel protective casing installed? ☒ Yes ☐ No

Static water level after drilling 14.03 ft.

Water level was measured using M-Scope

Well was developed for 4 hours at 25 gpm

Method of development Submersible

Was permanent pumping equipment installed? ☐ Yes ☒ No

Pump capacity NA gpm

Pump type:

Drilling Fluid Bentonite Type of Rig Failing 1500

Health and Safety Plan submitted? ☒ Yes ☐ No

Level of Protection used on site (circle one) None D C B A

Note: Measure all depths from land surface	Depth to Top (ft.)	Depth to Bottom (ft.)	Diameter (inches)	Material	Wgt./Rating (lbs/sch no.)
Single/Inner Casing	0	218	4"	PVC	Sch 40
Middle Casing (for triple cased wells only)					
Outer Casing (largest diameter)	0	183	8"	Steel	Sch 40
Open Hole or Screen (No. Used 010)	218	228	4"	PVC	Sch 40
Blank Casings (No. Used)					
Tail Piece					
Gravel Pack	212	257		#1 marie	
Grout	0 0	183 212		Neat Cement Bentonite	16500 lbs. 500 lbs.

Grouting Method Pressure Tremie
Drilling Method Mud Rotary

GEOLOGIC LOG

Note each depth where water was encountered in consolidated formations.

0-44 gray fine sand
44-96 yellow sand and clay
96-208 gray sand w/ clay layers
208-244 Light gray sand fine gravel w/ clay layers
244-257 gravel some sand w/ decomposed rock

I certify that I have constructed the above referenced well in accordance with all well permit requirements and applicable State rules and regulations.

Drilling Company UNI-TECH DRILLING
Well Driller (Print) Karl Hitzelberger
Driller's Signature Karl Hitzelberger
Registration No. M1530 Date 3/30/01

COPIES: White - DEP Canary - Driller Pink - Owner Goldenrod - Health Dept.

THIS FORM MUST BE COMPLETED BY THE PERMITTEE OR HIS/HER AGENT

GROUND WATER MONITORING WELL CERTIFICATION - FORM B - LOCATION CERTIFICATION

Name of Permittee: U.S. Environmental Protection Agency
Name of Facility: Puchack Well Field Superfund Site
Location: Pennsauken Township, New Jersey
NJPDES Number:

LAND SURVEYOR'S CERTIFICATION

Well Permit Number (As assigned by NJDEP's Bureau of Water Allocation): 31-59809-
This number must be permanently affixed to the well casing.
Datum: NAD 1983 Horizontal - NGVD 1929 Vertical
Longitude (one-tenth of a second): West 75° 02' 36.6"
Latitude (one-tenth of a second): North 39° 58' 09.7"

North 414220.0'
East 339803.5'

Elevation of Top of Casing (cap off) (one-hundredth of a foot): WC = 28.93' IC = 28.70' GR= 28.95'
Owners Well Number (As shown on application or plans): MW-34D

BENCHMARK - NGS Monument "D 100"
GEOGRAPHIC POSITION - North 39° 58' 25"
West 75° 03' 37"
DATE OF SURVEY - June, 2001

ELEVATION - 44.55'

AUTHENTICATION

I certify under penalty of law that I have personally examined and am familiar with the information submitted in this document and all attachments and that, based on my inquiry of those individuals immediately responsible for obtaining the information, I believe the submitted information is true, accurate and complete. I am aware that there are significant penalties for submitting false information including the possibility of fine and imprisonment.

Paul J Emilius Jr.

PROFESSIONAL LAND SURVEYOR'S SIGNATURE

Paul J. Emilius, Jr.
PROFESSIONAL LAND SURVEYOR'S NAME
(Please print or type)

SEAL

New Jersey P.L.S. License No. 37186
PROFESSIONAL LAND SURVEYOR'S LICENSE #

The Department reserves the right in cases of violation of permit specified ground water limits or Ground Water Q Standards (N.J.A.C. 7:9-6.1 et seq.) to require that wells be resurveyed to an accuracy of one-hundredth of a second lat. and longitude. This shall not be considered to be a major modification of the N.J.P.D.E.S. permit.

formb.doc

CDM Federal Programs Corporation

Double-Cased Monitoring Well

Client:	U.S. Environmental Protection Agency	Well No.:	MW 34 I
Site Name:	Puchack Well Field (3220-002)	Location:	Rt 130 & Prince
Project Location:	Pennsauken, New Jersey	Drilling Date(s):	~~1/16 TO 1/26~~ 1/31 TO 2/2/01 29
Drilling Contractor:	Uni-Tech Drilling Co.	Initial Water Level (ft. bgs):	
Drill Rig:	FAILING 1500	Geologist:	M Akbar
Drilling Method:	MUD ROTARY	North: East: Elevation (ft.amsl):	
		Depth to Bottom (ft. bgs):	148'

Annular Space Details

Type of Surface Seal:

Type of Annular Grout: Portland Type II CEMENT/BENTONITE

Type of Seal: Filter Pro NO. 00 SAND

Type of Filter Pack: Filter Pro NO. 1 SAND

Type of Backfill: Filter Pro #1 Sand

Well Construction Materials

	Diameter	Type of Material
Screen	4"	PVC SCH 40
Riser Casing	4"	PVC SCH 40
Flush Mount Type		

Measurements

Outer Casing Depth (ft. bgs)	120
Riser pipe length (ft)	133
Screen length (ft)	10
Screen slot size (in)	0.010
Depth to water (ft. bgs)	
Depth to bedrock (ft. bgs)	

Designed by: DICK WALKER

Affiliation: USGS

REMARKS: R E Walker 1/26/01

Depths - (feet)

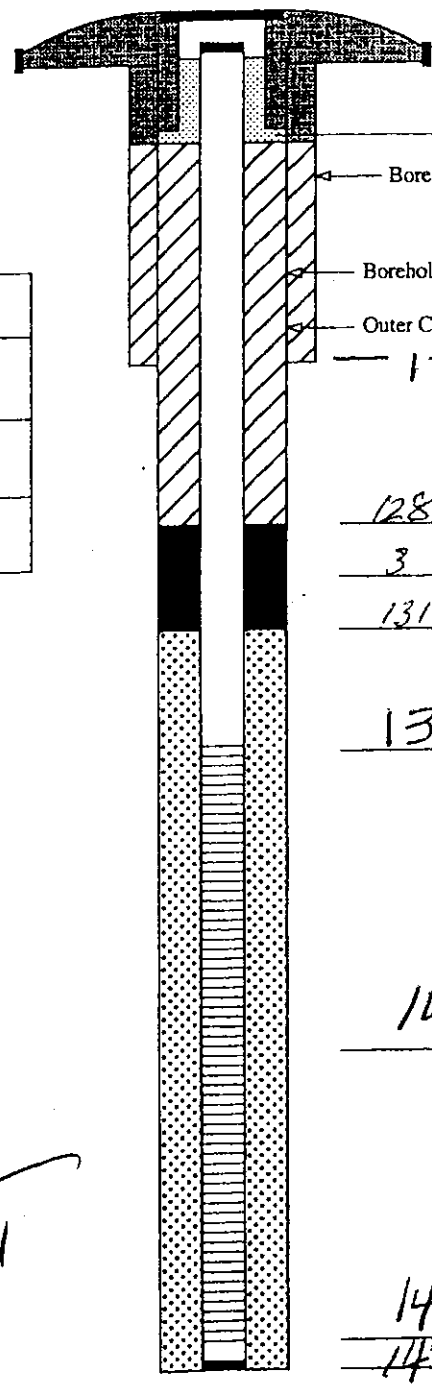

GROUND SURFACE

Sand

Borehole Diameter = 12"

Borehole Diameter = 8"

Outer Casing Type = 8" steel

120'

128' Top of Seal

3 Total Seal Interval

131' Top of Sand

133' Top of Screen

10' Total Screen Interval

143' Bottom of Screen

148 Bottom of ~~Borehole~~ Well

5' Sump

6' Backfill Interval

154 Bottom of Borehole

DOUBLE-FORM PUCHACK.GPJ FEDERAL.GDT 6/28/00

DWR-138 M
11/98

New Jersey Department of Environmental Protection
Bureau of Water Allocation

MONITORING WELL RECORD

Well Permit No. 31 - 59810

Atlas Sheet Coordinates 31 - 02 - 297

OWNER IDENTIFICATION - Owner PENNSAUKEN TOWNSHIP
Address 5605 N. CRESCENT BLVD. Zip Code
City PENNSAUKEN State NJ

WELL LOCATION - If not the same as owner please give address. Owner's Well No. MW 34 I
County CAMDEN Municipality PENNSAUKEN TWP Lot No. 2 Block No. 2302
Address PRINCE AVENUE
DATE WELL STARTED 1/31/01
DATE WELL COMPLETED 2/2/01

TYPE OF WELL (as per Well Permit Categories) MONITORING Case I.D.#
Regulatory Program Requiring Well

CONSULTING FIRM/FIELD SUPERVISOR (if applicable) CDM Federal Programs Tele. # 212-785-9123

WELL CONSTRUCTION

Total depth drilled 154 ft.
Well finished to 148 ft.

Borehole diameter:
Top 12 in.
Bottom 8 in.

Well was finished: ☐ above grade ☒ flush mounted

If finished above grade, casing height (stick up) above land surface ____ ft.

Was steel protective casing installed? ☒ Yes ☐ No

Static water level after drilling 44.04 ft.

Water level was measured using M-Scope

Well was developed for 4 hours at 25 gpm

Method of development Air Lift

Was permanent pumping equipment installed? ☐ Yes ☒ No

Pump capacity NA gpm

Pump type: NA

Drilling Fluid Bentonite Type of Rig Failing 1500

Health and Safety Plan submitted? ☒ Yes ☐ No

Level of Protection used on site (circle one) None D C B A

Note: Measure all depths from land surface	Depth to Top (ft.)	Depth to Bottom (ft.)	Diameter (inches)	Material	Wgt./Rating (lbs/sch no.)
Single/Inner Casing	0	133	4"	PVC	Sch 40
Middle Casing (for triple cased wells only)					
Outer Casing (largest diameter)	0	120	8"	Steel	Sch 40
Open Hole or Screen (No. Used .010)	133	143	4"	PVC	Sch 40
Blank Casings (No. Used)					
Tail Piece					
Gravel Pack	128	154	8	#1 Sand	
Grout	0	128		Neat Cement Bentonite	2000 lbs. 300 lbs.

Grouting Method Pressure Tremie
Drilling Method mud Rotary

GEOLOGIC LOG

Note each depth where water was encountered in consolidated formations.

0-15 yellow sand
15-20 Clay white
20-80 Sand and Clay lenses
80-97 sand CMF
97-140 white + red clay
140-154 white sand

I certify that I have constructed the above referenced well in accordance with all well permit requirements and applicable State rules and regulations.

Drilling Company UNI-TECH DRILLING
Well Driller (Print) Karl Hitzelberger
Driller's Signature Karl Hitzelberger
Registration No. M1530 Date 7/6/01

COPIES: White - DEP Canary - Driller Pink - Owner Goldenrod - Health Dept.

THIS FORM MUST BE COMPLETED BY THE PERMITTEE OR HIS/HER AGENT

GROUND WATER MONITORING WELL CERTIFICATION - FORM B - LOCATION CERTIFICATION

Name of Permittee: U.S. Environmental Protection Agency
Name of Facility: Puchack Well Field Superfund Site
Location: Pennsauken Township, New Jersey
NJPDES Number:

LAND SURVEYOR'S CERTIFICATION

Well Permit Number (As assigned by NJDEP's Bureau of Water Allocation): 31-59810-
This number must be permanently affixed to the well casing.
Datum: NAD 1983 Horizontal - NGVD 1929 Vertical
Longitude (one-tenth of a second): West 75° 02' 36.7"
Latitude (one-tenth of a second): North 39° 58' 09.8"

North 414231.0'
East 339797.2'

Elevation of Top of Casing (cap off) (one-hundredth of a foot): WC = 28.93' IC = 28.63' GR= 28.96'
Owners Well Number (As shown on application or plans): MW-34I

BENCHMARK - NGS Monument "D 100"
GEOGRAPHIC POSITION - North 39° 58' 25"
West 75° 03' 37"
DATE OF SURVEY - June, 2001

ELEVATION - 44.55'

AUTHENTICATION

I certify under penalty of law that I have personally examined and am familiar with the information submitted in this document and all attachments and that, based on my inquiry of those individuals immediately responsible for obtaining the information, I believe the submitted information is true, accurate and complete. I am aware that there are significant penalties for submitting false information including the possibility of fine and imprisonment.

Paul J Emilius Jr.

PROFESSIONAL LAND SURVEYOR'S SIGNATURE

Paul J. Emilius, Jr.
PROFESSIONAL LAND SURVEYOR'S NAME
(Please print or type)

SEAL

New Jersey P.L.S. License No. 37186
PROFESSIONAL LAND SURVEYOR'S LICENSE #

The Department reserves the right in cases of violation of permit specified ground water limits or Ground Water Q[illegible] Standards (N.J.A.C. 7:9-6.1 et seq.) to require that wells be resurveyed to an accuracy of one-hundredth of a second la[illegible] and longitude. This shall not be considered to be a major modification of the N.J.P.D.E.S. permit.

formb.doc

Single ~~Double~~ Cased Monitoring Well

CDM Federal Programs Corporation

Client:	U.S. Environmental Protection Agency	Well No.:	MW-34
Site Name:	Puchack Well Field (3220-002)	Location:	Rt 130, Prince
Project Location:	Pennsauken, New Jersey	Drilling Date(s):	~~1-16-01 - 1-26-01~~
Drilling Contractor:	Uni-Tech Drilling Co.	Initial Water Level (ft. bgs):	2/6/01 - 2/7/01
Drill Rig:	FAILING 1500	Geologist:	M Akbar
Drilling Method:	MUD ROTARY	North: East: Elevation (ft.amsl):	
		Depth to Bottom (ft. bgs):	

Annular Space Details

Type of Surface Seal:

Type of Annular Grout: Portland Type II CEMENT/BENTONITE

Type of Seal: Filter Pro NO. 00 SAND

Type of Filter Pack: Filter Pro NO. 1 SAND

Type of Backfill: Filter Pro #1 Sand

Well Construction Materials

	Diameter	Type of Material
Screen	4"	PVC SCH 40
Riser Casing	4"	PVC SCH 40
Flush Mount Type		

Measurements

Outer Casing Depth (ft. bgs)	
Riser pipe length (ft)	63
Screen length (ft)	5
Screen slot size (in)	0-010
Depth to water (ft. bgs)	
Depth to bedrock (ft. bgs)	

Designed by: DICK WALKER

Affiliation: USGS

REMARKS:

R L Walker 1/26/01

NOT TO SCALE

Depths - (feet below ground surface)

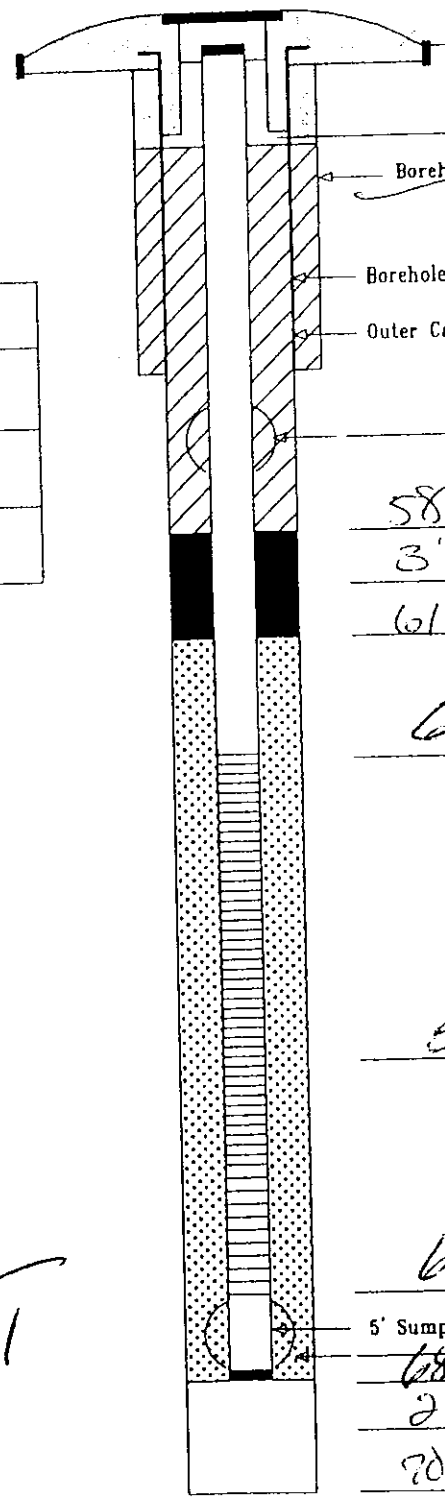

GROUND SURFACE

Sand

~~Borehole Diameter (in.)~~ =

Borehole Diameter (in.) = 8

Outer Casing Type = None

Centralizer

58 Top of Seal

3' Total Seal Interval

61 Top of Sand

63 Top of Screen

5 Total Screen Interval

68 Bottom of Screen

5' Sump None

Centralizer

68 Bottom of Well

2' Backfill Interval

70 Bottom of Borehole

DOUBLE-FORM PUCHACK.GPJ FEDERAL.GDT 8/28/00

DWR-138M
11/98

New Jersey Department of Environmental Protection
Bureau of Water Allocation

MONITORING WELL RECORD

Well Permit No. 31 - 59811

Atlas Sheet Coordinates ~~31 02 297~~

OWNER IDENTIFICATION - Owner PENNSAUKEN TOWNSHIP
Address 5605 N. CRESCENT BLVD.
City PENNSAUKEN State NJ Zip Code

WELL LOCATION - If not the same as owner please give address. Owner's Well No. MW 34M
County CAMDEN Municipality PENNSAUKEN TWP Lot No. 2 Block No. 2302
Address PRINCE AVENUE

DATE WELL STARTED 2/6/01
DATE WELL COMPLETED 2/7/01

TYPE OF WELL (as per Well Permit Categories) MONITORING Case I.D.#
Regulatory Program Requiring Well

CONSULTING FIRM/FIELD SUPERVISOR (if applicable) CDM Federal Programs Tele. # 212-785-9123

WELL CONSTRUCTION

Total depth drilled 70 ft.
Well finished to 68 ft.

Borehole diameter:
Top 8 in.
Bottom 8 in.

Well was finished: ☐ above grade ☒ flush mounted

If finished above grade, casing height (stick up) above land surface ____ ft.

Was steel protective casing installed? ☒ Yes ☐ No

Static water level after drilling 44.03 ft.

Water level was measured using M. Scope

Well was developed for 4 hours at 25 gpm

Method of development Air Lift

Was permanent pumping equipment installed? ☐ Yes ☒ No

Pump capacity NA gpm

Pump type: NA

Drilling Fluid Bentonite Type of Rig Failing 1500

Health and Safety Plan submitted? ☒ Yes ☐ No

Level of Protection used on site (circle one) None D C B A

Note: Measure all depths from land surface	Depth to Top (ft.)	Depth to Bottom (ft.)	Diameter (inches)	Material	Wgt./Rating (lbs/sch no.)
Single/Inner Casing	0	63	4"	PVC	Sch 40
Middle Casing (for triple cased wells only)					
Outer Casing (largest diameter)					
Open Hole or Screen (No. Used .010)	63	68	4"	PVC	Sch 40
Blank Casings (No. Used)					
Tail Piece					
Gravel Pack	58	70	8	#1 Sand	
Grout	0	58		Neat Cement / Bentonite	100 lbs. / 50 lbs.

Grouting Method Pressure Tremie
Drilling Method Mud Rotary

GEOLOGIC LOG

Note each depth where water was encountered in consolidated formations.

0-19 yellow sand
19-50 clay
50-70 sand w/ clay lenses

I certify that I have constructed the above referenced well in accordance with all well permit requirements and applicable State rules and regulations.

Drilling Company UNI-TECH DRILLING
Well Driller (Print) Karl Hitzelberger
Driller's Signature Karl Hitzelberger
Registration No. M1530 Date 7/6/01

COPIES: White - DEP Canary - Driller Pink - Owner Goldenrod - Health Dept.

THIS FORM MUST BE COMPLETED BY THE PERMITTEE OR HIS/HER AGENT

GROUND WATER MONITORING WELL CERTIFICATION - FORM B - LOCATION CERTIFICATION

Name of Permittee: U.S. Environmental Protection Agency
Name of Facility: Puchack Well Field Superfund Site
Location: Pennsauken Township, New Jersey
NJPDES Number:

LAND SURVEYOR'S CERTIFICATION

Well Permit Number (As assigned by NJDEP's Bureau of Water Allocation): 31-59811-
This number must be permanently affixed to the well casing.
Datum: NAD 1983 Horizontal - NGVD 1929 Vertical
Longitude (one-tenth of a second): West 75° 02' 36.7"
Latitude (one-tenth of a second): North 39° 58' 09.9"

North 414238.9'
East 339792.5'

Elevation of Top of Casing (cap off) (one-hundredth of a foot): WC = 29.12' IC = 28.66' GR= 29.13'
Owners Well Number (As shown on application or plans): MW-34M

BENCHMARK - NGS Monument "D 100"
GEOGRAPHIC POSITION - North 39° 58' 25"
West 75° 03' 37"
DATE OF SURVEY - June, 2001

ELEVATION - 44.55'

AUTHENTICATION

I certify under penalty of law that I have personally examined and am familiar with the information submitted in this document and all attachments and that, based on my inquiry of those individuals immediately responsible for obtaining the information, I believe the submitted information is true, accurate and complete. I am aware that there are significant penalties for submitting false information including the possibility of fine and imprisonment.

Paul J Emilius Jr.

PROFESSIONAL LAND SURVEYOR'S SIGNATURE

Paul J. Emilius, Jr.
PROFESSIONAL LAND SURVEYOR'S NAME
(Please print or type)

SEAL

New Jersey P.L.S. License No. 37186
PROFESSIONAL LAND SURVEYOR'S LICENSE #

The Department reserves the right in cases of violation of permit specified ground water limits or Ground Water Qu Standards (N.J.A.C. 7:9-6.1 et seq.) to require that wells be resurveyed to an accuracy of one-hundredth of a second lat and longitude. This shall not be considered to be a major modification of the N.J.P.D.E.S. permit.

formb.doc

CDM Federal Programs Corporation

Double-Cased Monitoring Well

Client: U.S. Environmental Protection Agency
Site Name: Puchack Well Field (3220-002)
Project Location: Pennsauken, New Jersey
Drilling Contractor: Uni-Tech Drilling Co.
Drill Rig: Failing CF1500
Drilling Method: Mud Rotary

Well No.: MW-35D
Location: Crandon & Norwood
Drilling Date(s): ~~2/15 to 2/26~~ 2/21/01 - 2/27/01
Initial Water Level (ft. bgs):
Geologist: L Campbell
North: East: Elevation (ft.amsl):
Depth to Bottom (ft. bgs): 280'

Annular Space Details

Type of Surface Seal:
Type of Annular Grout: Portland Type II Cement / bentonite
Type of Seal: Filter Pro #00 sand
Type of Filter Pack: Filter Pro #1 sand
Type of Backfill: see remarks

Well Construction Materials

	Diameter	Type of Material
Screen	4"	Sch 40 PVC
Riser Casing	4"	Sch 40 PVC
Flush Mount Type		

Measurements

Outer Casing Depth (ft. bgs)	245'
Riser pipe length (ft)	265
Screen length (ft)	10
Screen slot size (in)	0.010
Depth to water (ft. bgs)	
Depth to bedrock (ft. bgs)	

Designed by:
Affiliation:

REMARKS:
backfill:
280-290: Filter Pro #1 sand
290-300: native material (borehole collapse)

2/26/01

NOT TO SCALE

Depths - (feet below ground surface)

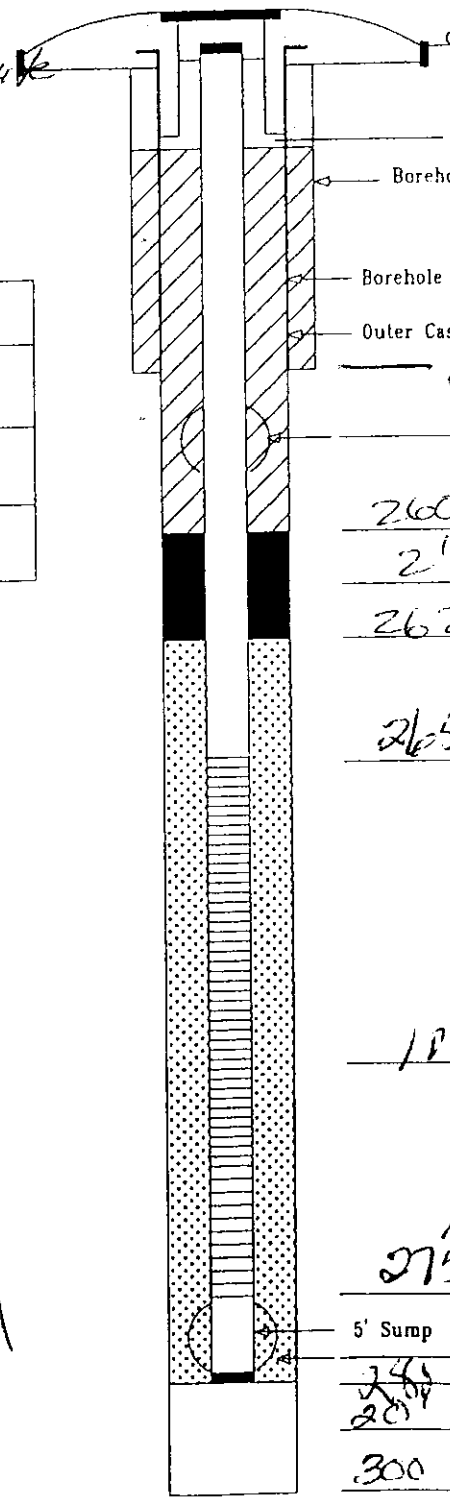

GROUND SURFACE
Sand
Borehole Diameter (in.) = 12
Borehole Diameter (in.) = 8
Outer Casing Type = 8" casing
245'
Centralizer
260 Top of Seal
2' Total Seal Interval
262 Top of Sand
265 Top of Screen
10 Total Screen Interval
275 Bottom of Screen
5' Sump
Centralizer
280 Bottom of Well
280 Backfill Interval
300 Bottom of Borehole

DOUBLE-FORM PUCRACK.GPJ FEDERAL.GDT 6/28/00

DWR-138 M
8/00

New Jersey Department of Environmental Protection
Bureau of Water Allocation

MONITORING WELL RECORD

Well Permit No. _____ - _____

Atlas Sheet Coordinates _____ : _____ : _____

OWNER IDENTIFICATION - Owner [illegible]
Address [illegible]
City [illegible] State [illegible] Zip Code _____

WELL LOCATION - If not the same as owner please give address. Owner's Well No. MW 35D
County [illegible] Municipality [illegible] Lot No. [illegible] Block No. [illegible]
Address [illegible]

DATE WELL STARTED 2/14/01
DATE WELL COMPLETED 2/27/01

TYPE OF WELL (as per Well Permit Categories) [illegible]
Regulatory Program Requiring Well _____ Case I.D.# _____

CONSULTING FIRM/FIELD SUPERVISOR (if applicable) [illegible] Federal Programs Tele. # 212-785-7133

WELL CONSTRUCTION

Total depth drilled 300 ft.
Well finished to 280' ft.

Borehole diameter:
Top 12 in.
Bottom 8 in.

Well was finished: ☐ above grade ☒ flush mounted

If finished above grade, casing height (stick up) above land surface _____ ft.

Was steel protective casing installed? ☒ Yes ☐ No

Static water level after drilling 101.57 ft.

Water level was measured using [illegible]

Well was developed for 4 hours at 25 gpm

Note: Measure all depths from land surface	Depth to Top (ft.)	Depth to Bottom (ft.)	Diameter (inches)	Material	Wgt./Rating (lbs/sch no.)
Single/Inner Casing	0	265	4"	PVC	Sch 40
Middle Casing (for triple cased wells only)					
Outer Casing (largest diameter)	0	245	8"	Steel	Sch 40
Open Hole or Screen (No. Used .010)	265'	275'	4"	PVC	Sch 40
Blank Casings (No. Used)					
Tail Piece					
Gravel Pack	260	300		#1 Morie	
Grout	0 0	245 260		Neat Cement Bentonite	18000 lbs. 600 lbs.

Grouting Method pressure tremie
Drilling Method [illegible]

Method of development Air Lift/Submersible

Was permanent pumping equipment installed? ☐ Yes ☒ No

Pump capacity NA gpm

Pump type: NA

Drilling Fluid Bentonite Type of Rig [illegible]

Health and Safety Plan submitted? ☒ Yes ☐ No

Level of Protection used on site (circle one) None D C B A

I certify that I have constructed the above referenced well in accordance with all well permit requirements and applicable State rules and regulations.

Drilling Company [illegible]

Well Driller (Print) [illegible]

Driller's Signature [illegible]

Registration No. [illegible] Date 5/30/01

GEOLOGIC LOG

Note each depth where water was encountered in consolidated formations.

0-48 [illegible]
48-124 [illegible]
124-188 [illegible]
188-248 [illegible]
248-300 [illegible]

AS-BUILT WELL LOCATION
(NAD 83 HORIZONTAL DATUM)
NJ STATE PLANE COORDINATE IN US SURVEY FEET

NORTHING: _____ EASTING: _____
OR
LATITUDE: __ ° __ ' __ . __ " LONGITUDE: __ ° __ ' __ . __ "

COPIES: White - DEP Canary - Driller Pink - Owner Goldenrod - Health Dept.

THIS FORM MUST BE COMPLETED BY THE PERMITTEE OR HIS/HER AGENT

GROUND WATER MONITORING WELL CERTIFICATION - FORM B - LOCATION CERTIFICATION

Name of Permittee: U.S. Environmental Protection Agency
Name of Facility: Puchack Well Field Superfund Site
Location: Pennsauken Township, New Jersey
NJPDES Number:

LAND SURVEYOR'S CERTIFICATION

Well Permit Number (As assigned by NJDEP's Bureau of Water Allocation): 31-59990-
This number must be permanently affixed to the well casing.
Datum: NAD 1983 Horizontal - NGVD 1929 Vertical
Longitude (one-tenth of a second): West 75° 03' 10.9"
Latitude (one-tenth of a second): North 39° 57' 53.1"

North 412555.2'
East 337125.6'

Elevation of Top of Casing (cap off) (one-hundredth of a foot): WC = 89.22' IC = 88.95' GR= 89.21'
Owners Well Number (As shown on application or plans): MW-35D

BENCHMARK - NGS Monument "D 100" **ELEVATION** - 44.55'
GEOGRAPHIC POSITION - North 39° 58' 25"
West 75° 03' 37"
DATE OF SURVEY - June, 2001

AUTHENTICATION

I certify under penalty of law that I have personally examined and am familiar with the information submitted in this document and all attachments and that, based on my inquiry of those individuals immediately responsible for obtaining the information, I believe the submitted information is true, accurate and complete. I am aware that there are significant penalties for submitting false information including the possibility of fine and imprisonment.

Paul J Emilius Jr.

PROFESSIONAL LAND SURVEYOR'S SIGNATURE

Paul J. Emilius, Jr.
PROFESSIONAL LAND SURVEYOR'S NAME
(Please print or type)

SEAL

New Jersey P.L.S. License No. 37186
PROFESSIONAL LAND SURVEYOR'S LICENSE #

The Department reserves the right in cases of violation of permit specified ground water limits or Ground Water Qu Standards (N.J.A.C. 7:9-6.1 et seq.) to require that wells be resurveyed to an accuracy of one-hundredth of a second lati and longitude. This shall not be considered to be a major modification of the N.J.P.D.E.S. permit.

formb.doc

2/28/01 - 3/1/01

CDM Federal Programs Corporation

Single ~~Double~~-Cased Monitoring Well

Client:	U.S. Environmental Protection Agency	Well No.:	MW-35 I
Site Name:	Puchack Well Field (3220-002)	Location:	Camden & Norwood
Project Location:	Pennsauken, New Jersey	Drilling Date(s):	~~2/15 / 2/26~~
Drilling Contractor:	Uni-Tech Drilling Co.	Initial Water Level (ft. bgs):	
Drill Rig:	Failing CF1500	Geologist:	L Campbell
Drilling Method:	Mud Rotary	North: East: Elevation (ft.amsl):	
		Depth to Bottom (ft. bgs):	225'

Annular Space Details

Type of Surface Seal:

Type of Annular Grout: Portland Type II cement/bentonite

Type of Seal: Filter Pro #00 sand

Type of Filter Pack: Filter Pro #1 sand

Type of Backfill: Filter Pro #1 sand

Well Construction Materials

	Diameter	Type of Material
Screen	4"	Sch 40 PVC
Riser Casing	4"	Sch 40 PVC
Flush Mount Type		

Measurements

Outer Casing Depth (ft. bgs)	—
Riser pipe length (ft)	210
Screen length (ft)	10'
Screen slot size (in)	0.010
Depth to water (ft. bgs)	
Depth to bedrock (ft. bgs)	

Designed by:

Affiliation:

REMARKS:

2/26/01

Depths - (feet)

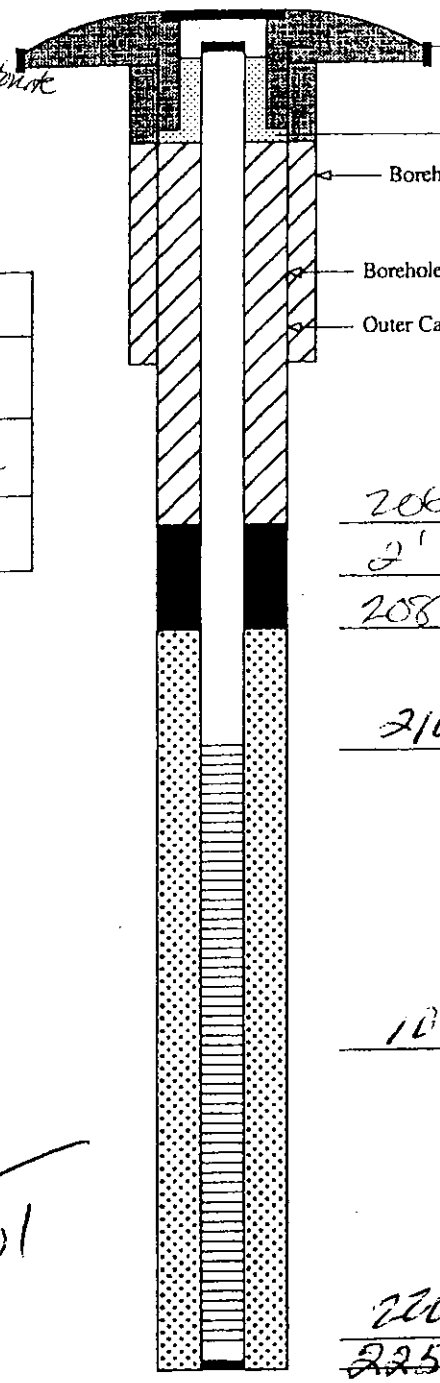

GROUND SURFACE

Sand

Borehole Diameter = ~~10"~~

Borehole Diameter = 8"

Outer Casing Type = None

206' Top of Seal

2' Total Seal Interval

208' Top of Sand

210' Top of Screen

10' Total Screen Interval

220' Bottom of Screen

~~225~~ Bottom of ~~Borehole~~ well

5' Tail/Sump

5' Backfill Interval

220 Bottom of Borehole

DOUBLE.FORM PUCHACK.GPJ FEDERAL.GDT 6/28/00

DWR-138 M
8/00

New Jersey Department of Environmental Protection
Bureau of Water Allocation

MONITORING WELL RECORD

Well Permit No. _____ - _____

Atlas Sheet Coordinates _____ : _____ : _____

OWNER IDENTIFICATION - Owner _____
Address _____
City _____ State _____ Zip Code _____

WELL LOCATION - If not the same as owner please give address. Owner's Well No. MW-35 I
County _____ Municipality _____ Lot No. _____ Block No. _____
Address _____

DATE WELL STARTED 3 / 28 / 01
DATE WELL COMPLETED 3 / 1 / 01

TYPE OF WELL (as per Well Permit Categories) _____
Regulatory Program Requiring Well _____ Case I.D.# _____

CONSULTING FIRM/FIELD SUPERVISOR (if applicable) SDM Federal Programs Tele. # 212 785-7123

WELL CONSTRUCTION

Total depth drilled 250 ft.
Well finished to 225 ft.

Borehole diameter:
Top 8 in.
Bottom 8 in.

Well was finished: ☐ above grade ☒ flush mounted

If finished above grade, casing height (stick up) above land surface _____ ft.

Was steel protective casing installed? ☒ Yes ☐ No

Static water level after drilling 101.97 ft.

Water level was measured using M Scope

Well was developed for 4 hours at 25 gpm

Note: Measure all depths from land surface	Depth to Top (ft.)	Depth to Bottom (ft.)	Diameter (inches)	Material	Wgt./Rating (lbs/sch no.)
Single/Inner Casing	0	210	4"	PVC	Sch 40
Middle Casing (for triple cased wells only)					
Outer Casing (largest diameter)					
Open Hole or Screen (No. Used .010)	210	220	4"	PVC	Sch 40
Blank Casings (No. Used)					
Tail Piece					
Gravel Pack	206	230	8	#1 Sand	
Grout	0	206		Neat Cement Bentonite	1000 lbs. 600 lbs.

Grouting Method Pressure Tremie
Drilling Method Mud Rotary

Method of development Air Lift

Was permanent pumping equipment installed? ☐ Yes ☒ No

Pump capacity NA gpm

Pump type: NA

Drilling Fluid Bentonite Type of Rig Failing 1500

Health and Safety Plan submitted? ☒ Yes ☐ No

Level of Protection used on site (circle one) None (D) C B A

I certify that I have constructed the above referenced well in accordance with all well permit requirements and applicable State rules and regulations.

Drilling Company _____

Well Driller (Print) Karl Hitzelberger

Driller's Signature Karl Hitzelberger

Registration No. M1550 Date 7 / 6 / 01

GEOLOGIC LOG

Note each depth where water was encountered in consolidated formations.

0-48 yellow sand
48-124 yellow m-f sand
124-188 yellow m-f sand w/ clay
188-230 light gray sand w/ gravels

AS-BUILT WELL LOCATION
(NAD 83 HORIZONTAL DATUM)
NJ STATE PLANE COORDINATE IN US SURVEY FEET

NORTHING: _____ EASTING: _____
OR
LATITUDE: __ ° __ ' __ . __ " LONGITUDE: __ ° __ ' __ . __ "

COPIES: White - DEP Canary - Driller Pink - Owner Goldenrod - Health Dept.

THIS FORM MUST BE COMPLETED BY THE PERMITTEE OR HIS/HER AGENT

GROUND WATER MONITORING WELL CERTIFICATION - FORM B - LOCATION CERTIFICATION

Name of Permittee: U.S. Environmental Protection Agency
Name of Facility: Puchack Well Field Superfund Site
Location: Pennsauken Township, New Jersey
NJPDES Number:

LAND SURVEYOR'S CERTIFICATION

Well Permit Number (As assigned by NJDEP's Bureau of Water Allocation): 31-59991-
This number must be permanently affixed to the well casing.
Datum: NAD 1983 Horizontal - NGVD 1929 Vertical
Longitude (one-tenth of a second): West 75° 03' 11.0"
Latitude (one-tenth of a second): North 39° 57' 53.0"

North 412548.3'
East 337115.0'

Elevation of Top of Casing (cap off) (one-hundredth of a foot): WC = 88.90' IC = 88.44' GR= 88.89'
Owners Well Number (As shown on application or plans): MW-35I

BENCHMARK - NGS Monument "D 100"
GEOGRAPHIC POSITION - North 39° 58' 25"
West 75° 03' 37"
DATE OF SURVEY - June, 2001

ELEVATION - 44.55'

AUTHENTICATION

I certify under penalty of law that I have personally examined and am familiar with the information submitted in this document and all attachments and that, based on my inquiry of those individuals immediately responsible for obtaining the information, I believe the submitted information is true, accurate and complete. I am aware that there are significant penalties for submitting false information including the possibility of fine and imprisonment.

Paul J Emilius Jr.

PROFESSIONAL LAND SURVEYOR'S SIGNATURE

Paul J. Emilius, Jr.
PROFESSIONAL LAND SURVEYOR'S NAME
(Please print or type)

SEAL

New Jersey P.L.S. License No. 37186
PROFESSIONAL LAND SURVEYOR'S LICENSE #

The Department reserves the right in cases of violation of permit specified ground water limits or Ground Water Q Standards (N.J.A.C. 7:9-6.1 et seq.) to require that wells be resurveyed to an accuracy of one-hundredth of a second latitude and longitude. This shall not be considered to be a major modification of the N.J.P.D.E.S. permit.

formb.doc