# APPENDIX VIII

# SPENT CARBON CONTAINER SPECIFICATIONS

# FOR

# ~~SIEMENS WATER TECHNOLOGIES CORP.~~SIEMENS INDUSTRY, INC.

# PARKER REACTIVATION FACILITY

# PARKER, ARIZONA

Revision ~~1~~2
~~July 2011~~April 2012

# TABLE OF CONTENTS

## Table of Container Volumes

| DRAWING NO. | DESCRIPTION |
|---|---|
| ASC200GENASSY | ASC 200 General Assembly |
| ASC1000SHEET1 | ASC1000 General Assembly |
| ASC2000SHEET1 | ASC2000 General Assembly |
| PV1000SHEET1 | PV1000 General Assembly |
| PV2000SHEET1 | PV2000 General Assembly |
| RB20 OS A SIZE | RB20 General Assembly |
| RB10 OSGENASSY | RB10 OS General Assembly |
| RB12HVGENASSY | RB12HV General Assembly |
| RB20 8X11 | RB20 General Assembly |
| 2220 | 1800 Cu. Ft Aluminum Pneumatic Semi |
| VSC200GENASSY | VSC200 General Assembly |
| VSC400 | VSC400 General Assembly |
| VSC1000SHEET1 | VSC1000 General Assembly |
| VSC2000SHEET1 | VSC2000 General Assembly |
| VSC2000GENASSY | Vapor Scrub Assembly VSC 2000 |
| VSC3000GENASSY | VSC3000 General Assembly |

**Table of Container Volumes**

| **Container Type** | **Volume ($ft^3$)** | **Volume (US Gallons)** |
|---|---|---|
| VSC/ASC 200/Drums | 7.9 | 59 |
| VSC/ASC 400 | 17.5 | 131 |
| VSC/ASC 1000 | 44.9 | 336 |
| VSC/ASC 2000 | 82.0 | 614 |
| VSC 3000 | 164 | 1228 |
| PV1000 | 44.9 | 336 |
| PV2000 | 82.0 | 614 |
| “Supersack” | Up to 67 | Up to 500 |

This table represents information for the major types of containers managed at the facility. Other containers of various volume and configuration are also received, however, these miscellaneous containers fall within the range of volumes shown.

STD: 2-0600-8X11A | INTL REF:

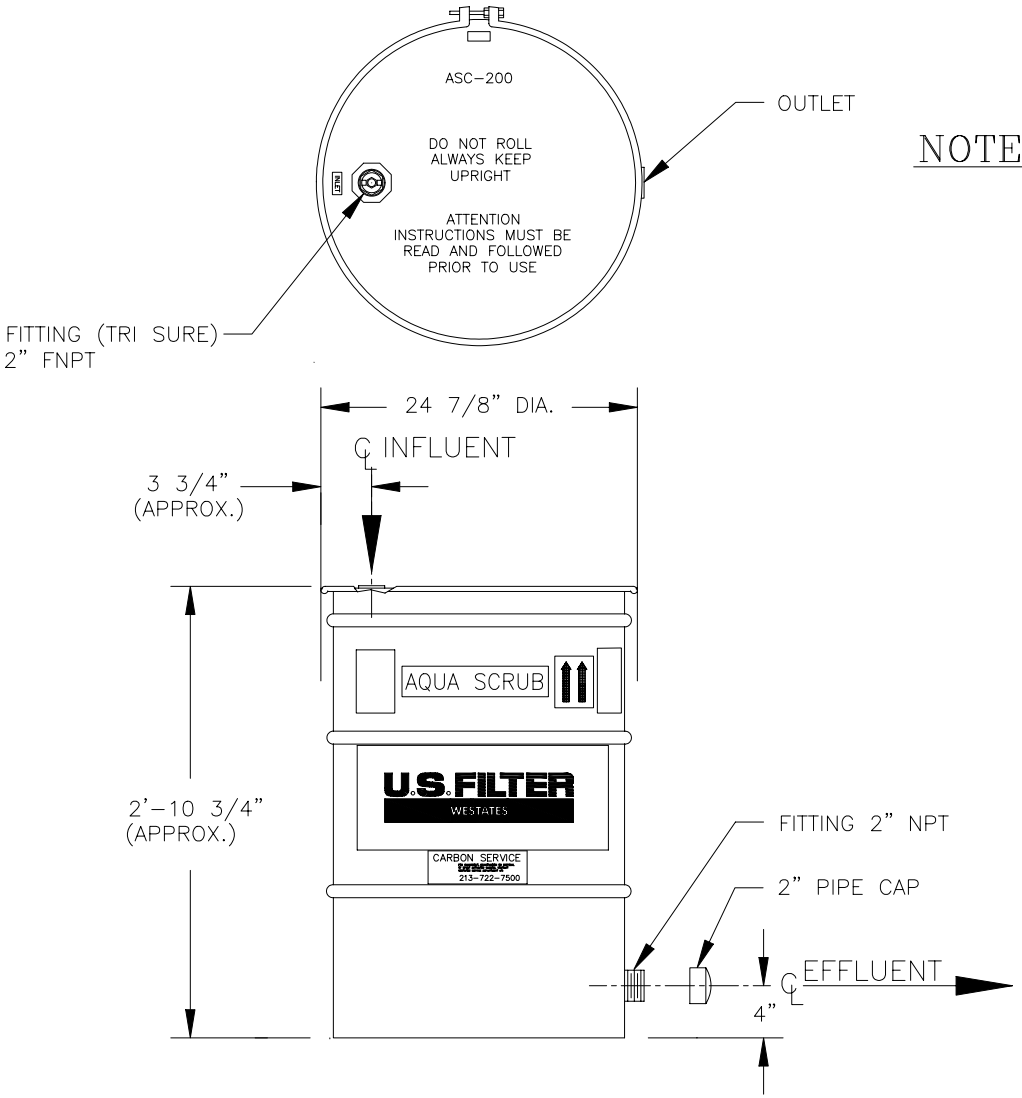


# NOTES:

1. CARBON:
   AS REQUIRED.
2. MATERIALS OF CONSTRUCTION:
   VESSEL: .....CARBON STEEL
   EXTERNAL COATING: .....HIGH GLOSS PAINT, WESTATES BLUE
   INTERNAL COATING: .....CURED EPOXY
   INTERNAL DISTRIBUTION: .....PVC
3. SPECIFICATIONS:
   FLOW * – GPM (MAX): ..... 10
   PRESSURE – PSIG (MAX): ..... 15
   TEMPERATURE – DEG F (MAX): ..... 140
   CARBON FILL VOLUME – CU FT: ..... 6.9
   CROSS SECTION – SQ FT: ..... 2.8
   SHIPPING WEIGHT – LBS: (APPROX,) ..... 250
   OPERATING WEIGHT – LBS: (APPROX,) ..... 500

* NOTE: ACTUAL DESIGN SHOULD BE BASED ON SUPERFICIAL BED VELOCITY (SBV) AS REQUIRED FOR SPECIFIC CONTAMINANTS.

COMPANY CONFIDENTIAL
THIS DOCUMENT AND ALL INFORMATION CONTAINED HEREIN ARE THE PROPERTY OF THE USFILTER AND/OR ITS AFFILIATES ("USF"). THE DESIGN CONCEPTS AND INFORMATION CONTAINED HEREIN ARE PROPRIETARY TO USF AND ARE SUBMITTED IN CONFIDENCE. THEY ARE NOT TRANSFERABLE AND MUST BE USED ONLY FOR THE PURPOSE FOR WHICH THE DOCUMENT IS EXPRESSLY LOANED. THEY MUST NOT BE DISCLOSED, REPRODUCED, LOANED OR USED IN ANY OTHER MANNER WITHOUT THE EXPRESS WRITTEN CONSENT OF USF. IN NO EVENT SHALL THEY BE USED IN ANY MANNER DETRIMENTAL TO THE INTEREST OF USF. ALL PATENT RIGHTS ARE RESERVED. UPON THE DEMAND OF USF, THIS DOCUMENT, ALONG WITH ALL COPIES AND EXTRACTS, AND ALL RELATED NOTES AND ANALYSES, MUST BE RETURNED TO USF OR DESTROYED, AS INSTRUCTED BY USF. ACCEPTANCE OF THE DELIVERY OF THIS DOCUMENT CONSTITUTES AGREEMENT TO THESE TERMS AND CONDITIONS.

| | | |
|---|---|---|
| DESIGNER AJA | DATE 2-13-01 | TITLE ASC 200 GENERAL ASSEMBLY |
| CHECKER | DATE | CLIENT |
| ENGINEER | DATE | |
| MANAGER | DATE | USFilter — USFILTER/WESTATES, RED BLUFF, CA, 1-800-795-2664 |
| FILE: | | |
| SCALE: NONE | | PROJECT / DRAWING ASC200GENASSY / SHEET OF / REV |

STD: 2-0600-8X11A | INTL REF:

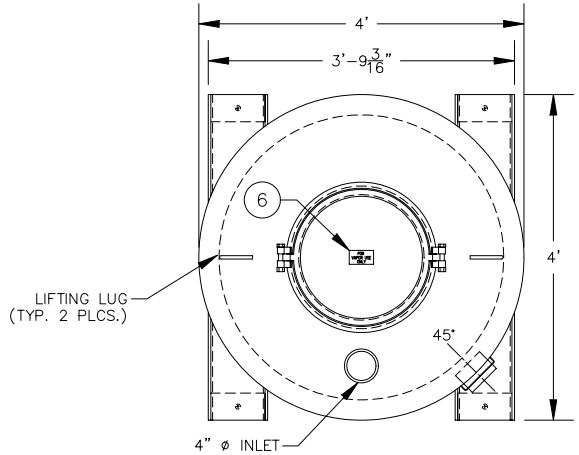


PLAN VIEW

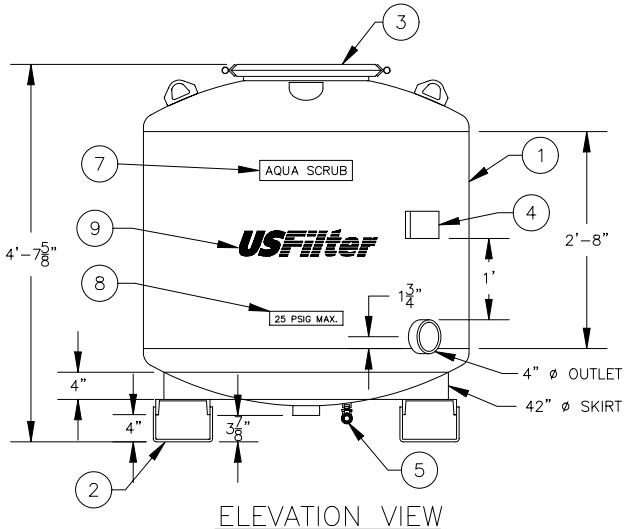


ELEVATION VIEW

## LIST OF COMPONENTS

| ITEM | QTY | DESCRIPTION |
|---|---|---|
| 1 | 1 | TANK ASSEMBLY |
| 2 | 1 | SKID ASSEMBLY |
| 3 | 1 | MANWAY ASSEMBLY, 18" DIA. |
| 4 | 1 | PLATE, I.D. & SERIAL NUMBER |
| 5 | 1 | BRONZE BALL VALVE, 3/4" |
| 6 | 1 | DECAL, "FOR WATER USE ONLY", 2 1/2" x 4 1/4" |
| 7 | 2 | DECAL, "AQUA-SCRUB", WHITE MYLAR |
| 8 | 2 | DECAL, "25 PSIG MAX", WHITE MYLAR |
| 9 | 2 | DECAL, "USFILTER/WESTATES" WHITE MYLAR W/BLUE LETTERS |

NOTES:

1. DESIGN DATA:
   48" DIAMETER PRESSURE VESSEL-25 PSIG(MAX)
   @ 120°F-NOT ASME CODE STAMPED FOR AQUA USE ONLY
   600 CFM
   1000 LBS. ACTIVATED CARBON

2. MATERIAL:
   HEADS - SA 36-HR
   SHELL - SA 36-HR
   SKID - SA 36-HR

3. SURFACE PREPARATION:
   INTERIOR:
   SANDBLAST: SSPC-SP-5 WHITE METAL
   ABRASIVE: GARNET OR GRIT - PROFILE: 1.5-2 MILS
   COATING: 3M BRAND SCOTCHKOTE 134
   THICKNESS: 10-15 DFMT - COLOR: GREEN
   EXTERIOR:
   SANDBLAST: SSPC-SP-10 NEAR WHITE METAL
   ABRASIVE: GARNET OR GRIT - PROFILE: 1.5-2 MILS
   PRIMER COAT: RUST PREVENTATIVE EPOXY PRIMER (CARBOLINE 893)
   THICKNESS: 4-6 DFMT - COLOR: RED
   FINISH COAT: HIGH BUILD POLYURETHANE (CARBOLINE 134HG)
   THICKNESS: 3-4 DFMT - COLOR: WHITE (FED. I.D.#17925)

4. LIFTING REQUIREMENTS:
   5200 LBS. MINIMUM RATING.
   EST. WEIGHTS:
   890 LBS. - EMPTY VESSEL
   1890 LBS. - WITH CARBON
   4280 LBS. - OPERATING


COMPANY CONFIDENTIAL
THIS DOCUMENT AND ALL INFORMATION CONTAINED HEREIN ARE THE PROPERTY OF THE USFILTER AND/OR ITS AFFILIATES ("USF"). THE DESIGN CONCEPTS AND INFORMATION CONTAINED HEREIN ARE PROPRIETARY TO USF AND ARE SUBMITTED IN CONFIDENCE. THEY ARE NOT TRANSFERABLE AND MUST BE USED ONLY FOR THE PURPOSE FOR WHICH THE DOCUMENT IS EXPRESSLY LOANED. THEY MUST NOT BE DISCLOSED, REPRODUCED, LOANED OR USED IN ANY OTHER MANNER WITHOUT THE EXPRESS WRITTEN CONSENT OF USF. IN NO EVENT SHALL THEY BE USED IN ANY MANNER DETRIMENTAL TO THE INTEREST OF USF. ALL PATENT RIGHTS ARE RESERVED. UPON THE DEMAND OF USF, THIS DOCUMENT, ALONG WITH ALL COPIES AND EXTRACTS, AND ALL RELATED NOTES AND ANALYSES, MUST BE RETURNED TO USF OR DESTROYED, AS INSTRUCTED BY USF. ACCEPTANCE OF THE DELIVERY OF THIS DOCUMENT CONSTITUTES AGREEMENT TO THESE TERMS AND CONDITIONS.


| DESIGNER | DATE |
|---|---|
| AJA | 10-8-01 |
| CHECKER | DATE |
| ENGINEER | DATE |
| MANAGER | DATE |
| FILE: | |
| SCALE: NONE | |

TITLE ASC1000
GENERAL ASSEMBLY

CLIENT

USFilter
USFILTER/WESTATES
RED BLUFF, CA
1-800-795-2664

| PROJECT | DRAWING | SHEET | REV |
|---|---|---|---|
| | ASC1000SHEET1.DWG | 1 OF 3 | |

STD: 2-0600-8X11A | INTL REF:

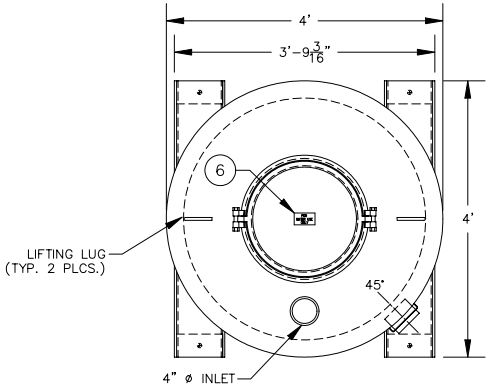


PLAN VIEW

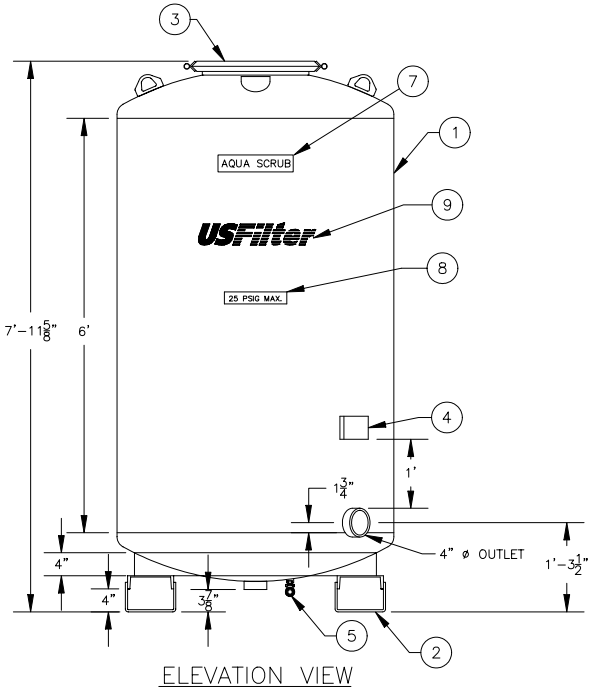


ELEVATION VIEW

## LIST OF COMPONENTS

| ITEM | QTY | DESCRIPTION |
|---|---|---|
| 1 | 1 | TANK ASSEMBLY |
| 2 | 1 | SKID ASSEMBLY |
| 3 | 1 | MANWAY ASSEMBLY, 18" DIA. |
| 4 | 1 | PLATE, I.D. & SERIAL NUMBER |
| 5 | 1 | BRONZE BALL VALVE, 3/4" |
| 6 | 1 | DECAL, "FOR WATER USE ONLY", 2 1/2" x 4 1/4" |
| 7 | 2 | DECAL, "AQUA-SCRUB", WHITE MYLAR |
| 8 | 2 | DECAL, "25 PSIG MAX", WHITE MYLAR |
| 9 | 2 | DECAL, "USFILTER/WESTATES" WHITE MYLAR W/BLUE LETTERS |

NOTES:

1. DESIGN DATA:
   48" DIAMETER PRESSURE VESSEL-25 PSIG (MAX)
   @ 120°F-NOT ASME CODE STAMPED FOR WATER USE ONLY
   50 GPM
   2000 LBS. ACTIVATED CARBON

2. MATERIAL:
   HEADS - SA 36-HR
   SHELL - SA 36-HR
   SKID - SA 36-HR

3. SURFACE PREPARATION:
   INTERIOR:
   SANDBLAST: SSPC-SP-5 WHITE METAL
   ABRASIVE: GARNET OR GRIT - PROFILE: 1.5-2 MILS
   COATING: 3M BRAND SCOTCHKOTE 134
   THICKNESS: 10-15 DFMT - COLOR: GREEN
   EXTERIOR:
   SANDBLAST: SSPC-SP-10 NEAR WHITE METAL
   ABRASIVE: GARNET OR GRIT - PROFILE: 1.5-2 MILS
   PRIMER COAT: RUST PREVENTATIVE EPOXY PRIMER (CARBOLINE 893)
   THICKNESS: 4-6 DFMT - COLOR: RED
   FINISH COAT: HIGH BUILD POLYURETHANE (CARBOLINE 134HG)
   THICKNESS: 3-4 DFMT - COLOR: WHITE (FED. I.D.#17925)

4. LIFTING REQUIREMENTS:
   5200 LBS. MINIMUM RATING.
   EST. WEIGHTS:
   1190 LBS. - EMPTY VESSEL
   3190 LBS. - WITH CARBON
   7317 LBS. - OPERATING

COMPANY CONFIDENTIAL
THIS DOCUMENT AND ALL INFORMATION CONTAINED HEREIN ARE THE PROPERTY OF THE USFILTER AND/OR ITS AFFILIATES ("USF"). THE DESIGN CONCEPTS AND INFORMATION CONTAINED HEREIN ARE PROPRIETARY TO USF AND ARE SUBMITTED IN CONFIDENCE. THEY ARE NOT TRANSFERABLE AND MUST BE USED ONLY FOR THE PURPOSE FOR WHICH THE DOCUMENT IS EXPRESSLY LOANED. THEY MUST NOT BE DISCLOSED, REPRODUCED, LOANED OR USED IN ANY OTHER MANNER WITHOUT THE EXPRESS WRITTEN CONSENT OF USF. IN NO EVENT SHALL THEY BE USED IN ANY MANNER DETRIMENTAL TO THE INTEREST OF USF. ALL PATENT RIGHTS ARE RESERVED. UPON THE DEMAND OF USF, THIS DOCUMENT, ALONG WITH ALL COPIES AND EXTRACTS, AND ALL RELATED NOTES AND ANALYSES, MUST BE RETURNED TO USF OR DESTROYED, AS INSTRUCTED BY USF. ACCEPTANCE OF THE DELIVERY OF THIS DOCUMENT CONSTITUTES AGREEMENT TO THESE TERMS AND CONDITIONS.

| DESIGNER | DATE |
|---|---|
| AJA | 10-8-01 |
| CHECKER | DATE |
| ENGINEER | DATE |
| MANAGER | DATE |
| FILE: | |
| SCALE: NONE | |

TITLE ASC2000
GENERAL ASSEMBLY

CLIENT

USFilter
USFILTER/WESTATES
RED BLUFF, CA
1-800-795-2664

| PROJECT | DRAWING | SHEET | REV |
|---|---|---|---|
| | ASC2000SHEET1.DWG | 1 OF 5 | |

STD: 2-0600-8X11A | INTR_REF_NO

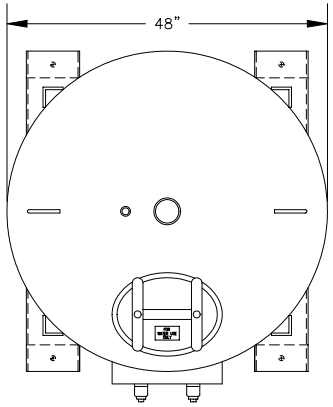


PLAN VIEW

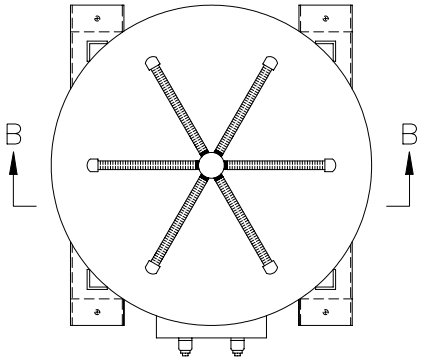


SECTION "A-A"

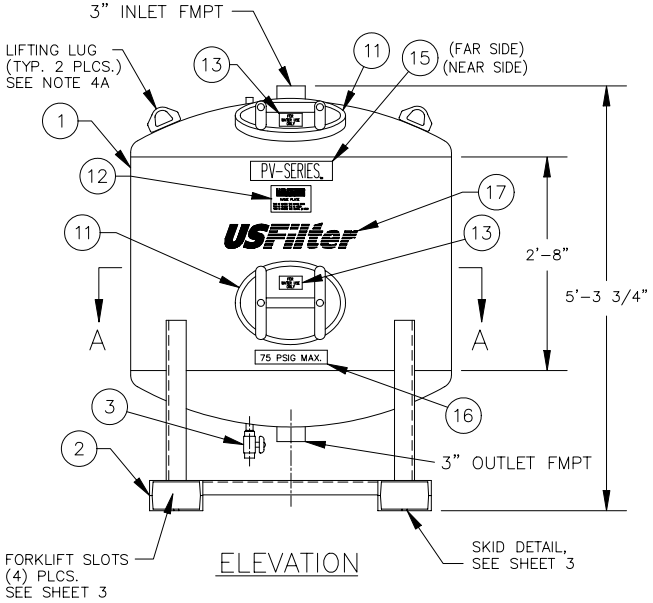


ELEVATION

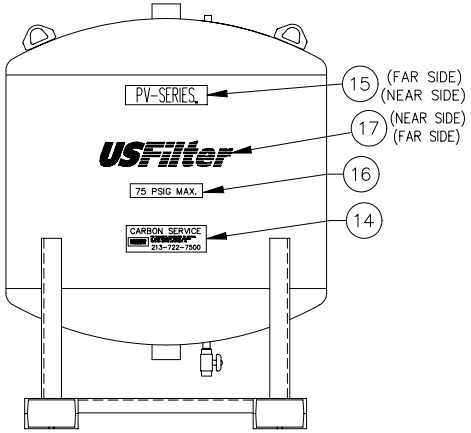


REAR ELEVATION

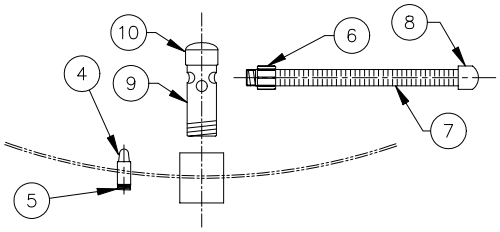

ENLARGED SECTION VIEW B-B
UNDERDRAIN ASSEMBLY-(SEPARATED)

## LIST OF COMPONENTS

| ITEM | QTY | DESCRIPTION |
|---|---|---|
| 1 | | TANK ASSEMBLY DWG. # PV1000SHEET2 |
| 2 | | SKID ASSEMBLY DWG. # PV1000SHEET3 |
| 3 | 1 | BRONZE BALL VALVE, 3/4" |
| 4 | 1 | POLY SCREEN ORTHOS PART# N5 R-3/4", MPT |
| 5 | 1 | CLOSE NIPPLE, SCHD 40 304 SS, 3/4" |
| 6 | 6 | MALE ADAPTER, SCH 80 PVC, 1" |
| 7 | 6 | PIPE, SLOTTED SCH 80 PVC, 1" x 15" LG |
| 8 | 6 | CAP, SCH 80 PVC, SLIP, 1" |
| 9 | 1 | UNDERDRAIN HUB, 3" DIA x 10 1/2" LG, SCH 80 PVC |
| 10 | 1 | CAP, SCH 80 PVC, SLIP, 3" |
| 11 | 2 | MANWAY ASSEMBLY, 11" x 15" |
| 12 | 1 | PLATE, I.D. & SERIAL NUMBER |
| 13 | 2 | DECAL, "FOR WATER USE ONLY", 2 1/2" x 4 1/4" |
| 14 | 1 | DECAL, "CARBON SERVICE" WHITE MYLAR W/BLUE LETTERS, 4" x 12" |
| 15 | 2 | DECAL, "PV-SERIES", WHITE MYLAR |
| 16 | 2 | DECAL, "75 PSIG MAX", WHITE MYLAR |
| 17 | 2 | DECAL, "USFILTER/WESTATES" WHITE MYLAR W/BLUE LETTERS |

NOTES:

1. DESIGN DATA:
   48" DIAMETER PRESSURE VESSEL-75 PSIG(MAX)
   @ 150°F-NOT ASME CODE STAMPED
   FOR WATER USE ONLY
   MAXIMUM FLOW RATE: 50 GPM
   MAXIMUM CARBON CAPACITY: 1000 LBS. ACTIVATED CARBON

2. MATERIAL:
   HEADS: STD. F & D NON CODE 3/16" THICKNESS C.S.
   SHELL: 3/16" THK. 48" OD x 32" LONG C.S.
   SKID: SA 36-HR

3. SURFACE PREPARATION:
   INTERIOR:
   SANDBLAST: SSPC-SP-5 WHITE METAL
   ABRASIVE: GARNET OR GRIT - PROFILE: 1.5-2 MILS
   COATING: 3M BRAND SCOTCHKOTE 134
   THICKNESS: 10-15 DFMT - COLOR: GREEN
   EXTERIOR:
   SANDBLAST: SSPC-SP-10 NEAR WHITE METAL
   ABRASIVE: GARNET OR GRIT - PROFILE: 1.5-2 MILS
   PRIMER COAT: RUST PREVENTATIVE EPOXY PRIMER (CARBOLINE 893)
   THICKNESS: 4-6 DFMT - COLOR: RED
   FINISH COAT: HIGH BUILD POLYURETHANE (CARBOLINE 134HG)
   THICKNESS: 3-4 DFMT - COLOR: BLUE (FED. I.D.#15052)

4. LIFTING REQUIREMENTS:
   3,700 LBS. MINIMUM RATING.
   EST. WEIGHTS:
   910 LBS. - EMPTY VESSEL
   1910 LBS. - WITH CARBON
   4300 LBS. - OPERATING

COMPANY CONFIDENTIAL
THIS DOCUMENT AND ALL INFORMATION CONTAINED HEREIN ARE THE PROPERTY OF THE USFILTER AND/OR ITS AFFILIATES ("USF"). THE DESIGN CONCEPTS AND INFORMATION CONTAINED HEREIN ARE PROPRIETARY TO USF AND ARE SUBMITTED IN CONFIDENCE. THEY ARE NOT TRANSFERABLE AND MUST BE USED ONLY FOR THE PURPOSE FOR WHICH THE DOCUMENT IS EXPRESSLY LOANED. THEY MUST NOT BE DISCLOSED, REPRODUCED, LOANED OR USED IN ANY OTHER MANNER WITHOUT THE EXPRESS WRITTEN CONSENT OF USF. IN NO EVENT SHALL THEY BE USED IN ANY MANNER DETRIMENTAL TO THE INTEREST OF USF. ALL PATENT RIGHTS ARE RESERVED. UPON THE DEMAND OF USF, THIS DOCUMENT, ALONG WITH ALL COPIES AND EXTRACTS, AND ALL RELATED NOTES AND ANALYSES, MUST BE RETURNED TO USF OR DESTROYED, AS INSTRUCTED BY USF. ACCEPTANCE OF THE DELIVERY OF THIS DOCUMENT CONSTITUTES AGREEMENT TO THESE TERMS AND CONDITIONS.

| DESIGNER | DATE |
|---|---|
| AJA | 9-11-01 |
| CHECKER | DATE |
| ENGINEER | DATE |
| MANAGER | DATE |
| FILE: | |
| SCALE: NONE | |

TITLE: PV1000 GENERAL ASSEMBLY

CLIENT

USFilter
USFILTER/WESTATES
RED BLUFF, CA
1-800-795-2664

| PROJECT | DRAWING | SHEET | REV |
|---|---|---|---|
| | PV1000SHEET1 | 1 OF 5 | |

STD: 2-0600-8X11A | INTR_REF_NO

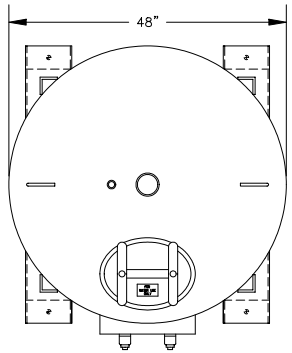


PLAN VIEW

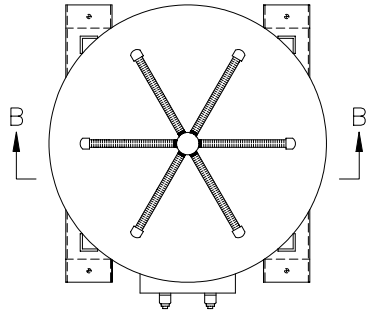


SECTION "A-A"

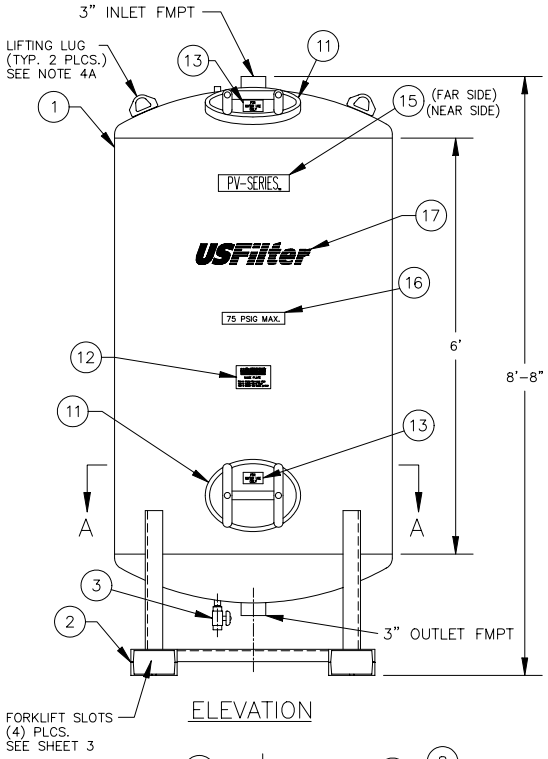


ELEVATION

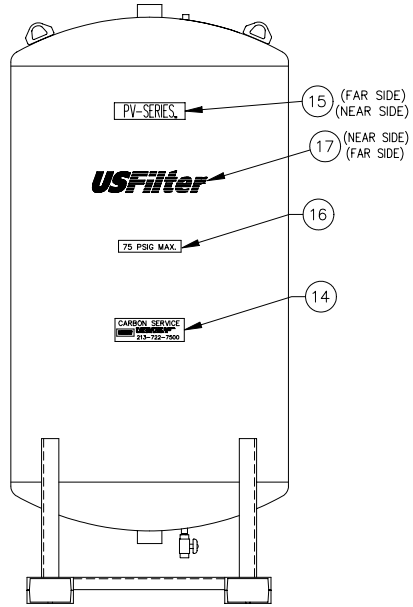


REAR ELEVATION

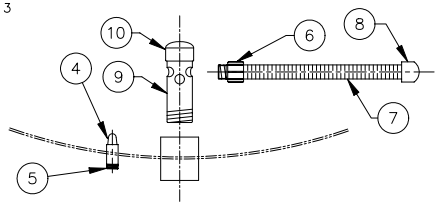


ENLARGED SECTION VIEW B-B
UNDERDRAIN ASSEMBLY-(SEPARATED)

## LIST OF COMPONENTS

| ITEM | QTY | DESCRIPTION |
|---|---|---|
| 1 | | TANK ASSEMBLY DWG. # PV2000SHEET2 |
| 2 | | SKID ASSEMBLY DWG. # PV2000SHEET3 |
| 3 | 1 | BRONZE BALL VALVE, 3/4" |
| 4 | 1 | POLY SCREEN ORTHOS PART# N5 R-3/4", MPT |
| 5 | 1 | CLOSE NIPPLE, SCHD 40 304 SS, 3/4" |
| 6 | 6 | MALE ADAPTER, SCH 80 PVC, 1" |
| 7 | 6 | PIPE, SLOTTED SCH 80 PVC, 1" x 15" LG |
| 8 | 6 | CAP, SCH 80 PVC, SLIP, 1" |
| 9 | 1 | UNDERDRAIN HUB, 3" DIA x 10 1/2" LG, SCH 80 PVC |
| 10 | 1 | CAP, SCH 80 PVC, SLIP, 3" |
| 11 | 2 | MANWAY ASSEMBLY, 11" x 15" |
| 12 | 1 | PLATE, I.D. & SERIAL NUMBER |
| 13 | 2 | DECAL, "FOR WATER USE ONLY", 2 1/2" x 4 1/4" |
| 14 | 1 | DECAL, "CARBON SERVICE" WHITE MYLAR W/BLUE LETTERS, 4" x 12" |
| 15 | 2 | DECAL, "PV-SERIES", WHITE MYLAR |
| 16 | 2 | DECAL, "75 PSIG MAX", WHITE MYLAR |
| 17 | 2 | DECAL, "USFILTER/WESTATES" WHITE MYLAR W/BLUE LETTERS |

NOTES:

1. DESIGN DATA:
   48" DIAMETER PRESSURE VESSEL-75 PSIG(MAX)
   @ 150°F-NOT ASME CODE STAMPED
   FOR WATER USE ONLY
   MAXIMUM FLOW RATE: 100 GPM
   MAXIMUM CARBON CAPACITY: 2000 LBS. ACTIVATED CARBON

2. MATERIAL:
   HEADS: STD. F & D NON CODE 3/16" THICKNESS C.S.
   SHELL: 3/16" THK. 48" OD x 72" LONG C.S.
   SKID: SA 36-HR

3. SURFACE PREPARATION:
   INTERIOR:
   SANDBLAST: SSPC-SP-5 WHITE METAL
   ABRASIVE: GARNET OR GRIT - PROFILE: 1.5-2 MILS
   COATING: 3M BRAND SCOTCHKOTE 134
   THICKNESS: 10-15 DFMT - COLOR: GREEN
   EXTERIOR:
   SANDBLAST: SSPC-SP-10 NEAR WHITE METAL
   ABRASIVE: GARNET OR GRIT - PROFILE: 1.5-2 MILS
   PRIMER COAT: RUST PREVENTATIVE EPOXY PRIMER (CARBOLINE 893)
   THICKNESS: 4-6 DFMT - COLOR: RED
   FINISH COAT: HIGH BUILD POLYURETHANE (CARBOLINE 134HG)
   THICKNESS: 3-4 DFMT - COLOR: BLUE (FED. I.D.#15052)

4. LIFTING REQUIREMENTS:
   5,200 LBS. MINIMUM RATING.
   EST. WEIGHTS:
   1190 LBS. - EMPTY VESSEL
   3190 LBS. - WITH CARBON
   7717 LBS. - OPERATING

COMPANY CONFIDENTIAL
THIS DOCUMENT AND ALL INFORMATION CONTAINED HEREIN ARE THE PROPERTY OF THE USFILTER AND/OR ITS AFFILIATES ("USF"). THE DESIGN CONCEPTS AND INFORMATION CONTAINED HEREIN ARE PROPRIETARY TO USF AND ARE SUBMITTED IN CONFIDENCE. THEY ARE NOT TRANSFERABLE AND MUST BE USED ONLY FOR THE PURPOSE FOR WHICH THE DOCUMENT IS EXPRESSLY LOANED. THEY MUST NOT BE DISCLOSED, REPRODUCED, LOANED OR USED IN ANY OTHER MANNER WITHOUT THE EXPRESS WRITTEN CONSENT OF USF. IN NO EVENT SHALL THEY BE USED IN ANY MANNER DETRIMENTAL TO THE INTEREST OF USF. ALL PATENT RIGHTS ARE RESERVED. UPON THE DEMAND OF USF, THIS DOCUMENT, ALONG WITH ALL COPIES AND EXTRACTS, AND ALL RELATED NOTES AND ANALYSES, MUST BE RETURNED TO USF OR DESTROYED, AS INSTRUCTED BY USF. ACCEPTANCE OF THE DELIVERY OF THIS DOCUMENT CONSTITUTES AGREEMENT TO THESE TERMS AND CONDITIONS.

| DESIGNER | DATE |
|---|---|
| AJA | 9-11-01 |
| CHECKER | DATE |
| ENGINEER | DATE |
| MANAGER | DATE |
| FILE: | |
| SCALE: NONE | |

TITLE PV2000
GENERAL ASSEMBLY

CLIENT

USFilter
USFILTER/WESTATES
RED BLUFF, CA
1-800-795-2664

| PROJECT | DRAWING | SHEET | REV |
|---|---|---|---|
| | PV2000SHEET1 | 1 OF 5 | |

STD: 2-0600-8X11A | INTL REF:

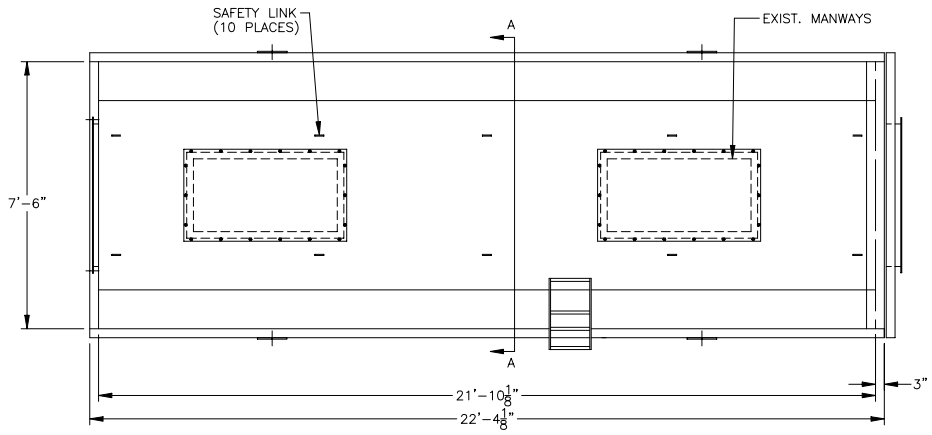


PLAN VIEW

SCALE: 1"=2'-0"

NOTES:

1. DESIGN DATA:
   14 INCHES W.G.
2. MATERIAL:
   CARBON STEEL
3. SURFACE PREPARATION:
   (A) PRIMER: (2) PART EPOXY PRIMER
   (B) FINISH: POLYURETHANE, BLUE
4. APPROXIMATE WEIGHTS:
   EMPTY: (NO CARBON)
   ROOF:..... 1,400 LBS
   BOX:..... 8,100 LBS
   TOTAL:..... 9,500 LBS

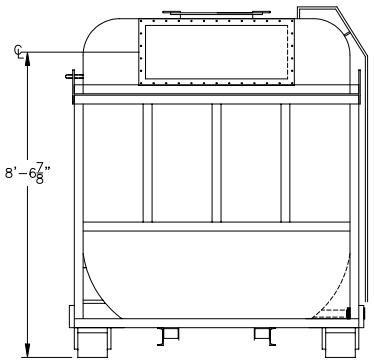


END VIEW

4-1/2"ø HOLE
INSTALL ON BOTH SIDES
OF WALL

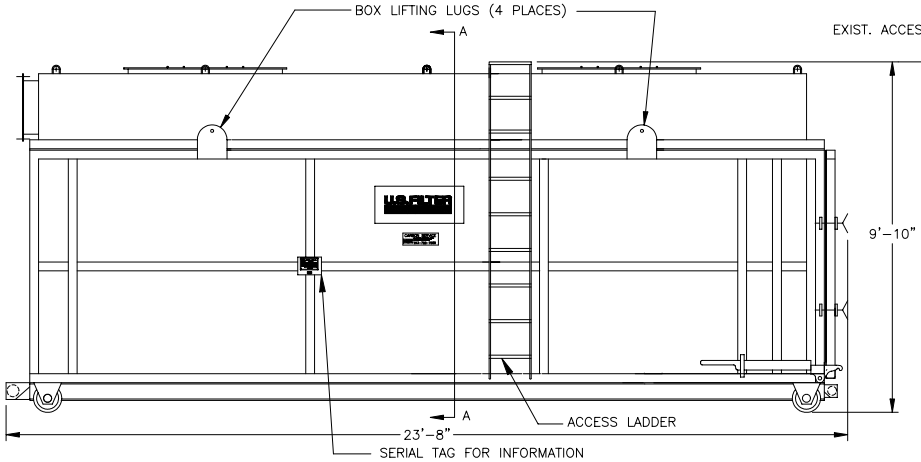


SIDE VIEW

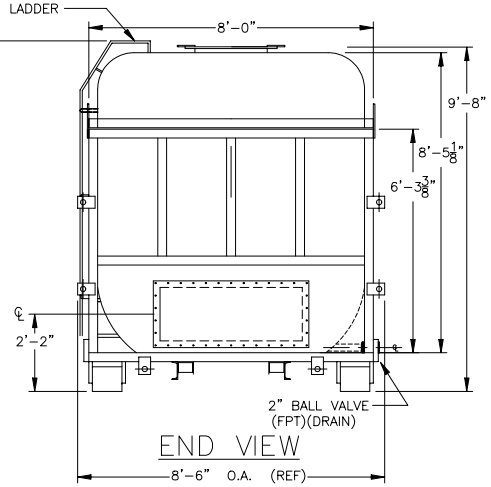


END VIEW

ELEVATION VIEWS

COMPANY CONFIDENTIAL
THIS DOCUMENT AND ALL INFORMATION CONTAINED HEREIN ARE THE PROPERTY OF THE USFILTER AND/OR ITS AFFILIATES ("USF"). THE DESIGN CONCEPTS AND INFORMATION CONTAINED HEREIN ARE PROPRIETARY TO USF AND ARE SUBMITTED IN CONFIDENCE. THEY ARE NOT TRANSFERABLE AND MUST BE USED ONLY FOR THE PURPOSE FOR WHICH THE DOCUMENT IS EXPRESSLY LOANED. THEY MUST NOT BE DISCLOSED, REPRODUCED, LOANED OR USED IN ANY OTHER MANNER WITHOUT THE EXPRESS WRITTEN CONSENT OF USF. IN NO EVENT SHALL THEY BE USED IN ANY MANNER DETRIMENTAL TO THE INTEREST OF USF. ALL PATENT RIGHTS ARE RESERVED. UPON THE DEMAND OF USF, THIS DOCUMENT, ALONG WITH ALL COPIES AND EXTRACTS, AND ALL RELATED NOTES AND ANALYSES, MUST BE RETURNED TO USF OR DESTROYED, AS INSTRUCTED BY USF. ACCEPTANCE OF THE DELIVERY OF THIS DOCUMENT CONSTITUTES AGREEMENT TO THESE TERMS AND CONDITIONS.

| DESIGNER | DATE | TITLE RB20 GENERAL ASSEMBLY |
|---|---|---|
| LLR | 5-21-01 | |
| CHECKER | DATE | CLIENT |
| ENGINEER | DATE | |
| MANAGER | DATE | USFilter USFILTER/WESTATES RED BLUFF, CA 1-800-795-2664 |
| FILE: | | |
| SCALE: NONE | | |

| PROJECT | DRAWING | SHEET | REV |
|---|---|---|---|
| | RB20 OS A SIZE.DWG | 1 OF 1 | |

STD: 2-0600-8X11A | INTL REF:

NOTES:

1. CARBON CAPACITY 12000 LB
2. FLOW RATE 8000CFM MAX.
3. MAX. PRESSURE 28 " W.C. / 2" W.C. VACUUM
4. EMPTY WEIGHT 9500 LB.
5. INLET/ OUT LET 12"X36".
6. MAX TEMPERATURE 140°F

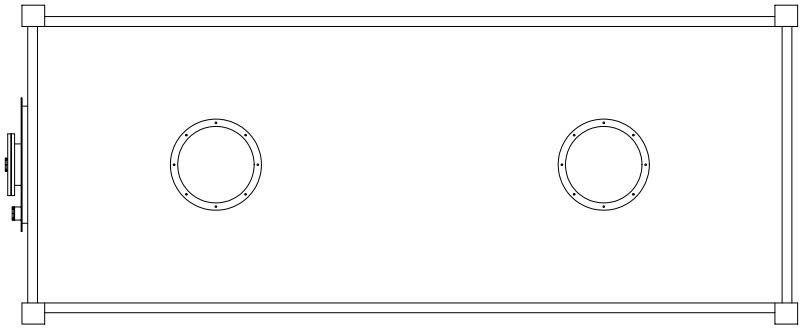

TOP VIEW

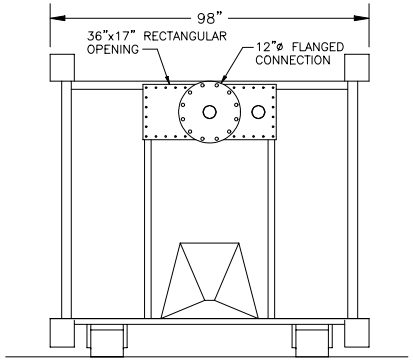


END VIEW

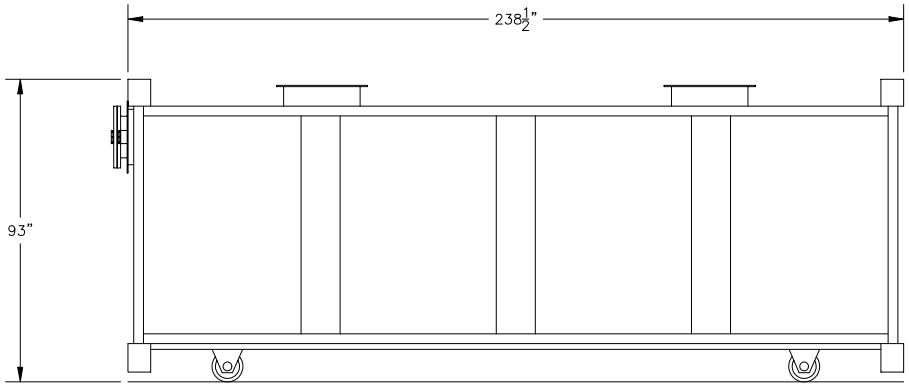


SIDE VIEW

COMPANY CONFIDENTIAL
THIS DOCUMENT AND ALL INFORMATION CONTAINED HEREIN ARE THE PROPERTY OF THE USFILTER AND/OR ITS AFFILIATES ("USF"). THE DESIGN CONCEPTS AND INFORMATION CONTAINED HEREIN ARE PROPRIETARY TO USF AND ARE SUBMITTED IN CONFIDENCE. THEY ARE NOT TRANSFERABLE AND MUST BE USED ONLY FOR THE PURPOSE FOR WHICH THE DOCUMENT IS EXPRESSLY LOANED. THEY MUST NOT BE DISCLOSED, REPRODUCED, LOANED OR USED IN ANY OTHER MANNER WITHOUT THE EXPRESS WRITTEN CONSENT OF USF. IN NO EVENT SHALL THEY BE USED IN ANY MANNER DETRIMENTAL TO THE INTEREST OF USF. ALL PATENT RIGHTS ARE RESERVED. UPON THE DEMAND OF USF, THIS DOCUMENT, ALONG WITH ALL COPIES AND EXTRACTS, AND ALL RELATED NOTES AND ANALYSES, MUST BE RETURNED TO USF OR DESTROYED, AS INSTRUCTED BY USF. ACCEPTANCE OF THE DELIVERY OF THIS DOCUMENT CONSTITUTES AGREEMENT TO THESE TERMS AND CONDITIONS.

| | | |
|---|---|---|
| DESIGNER LLR | DATE 5-9-01 | TITLE RB10 OS GENERAL ASSEMBLY |
| CHECKER | DATE | CLIENT |
| ENGINEER | DATE | |
| MANAGER | DATE | USFilter USFILTER/WESTATES RED BLUFF, CA 1-800-795-2664 |
| FILE: | | |
| SCALE: NONE | | |

| PROJECT | DRAWING | SHEET | REV |
|---|---|---|---|
| | RB10 OSGENASSY | OF | |

STD: 2-0600-8X11A | INTL REF:

# RB12HV

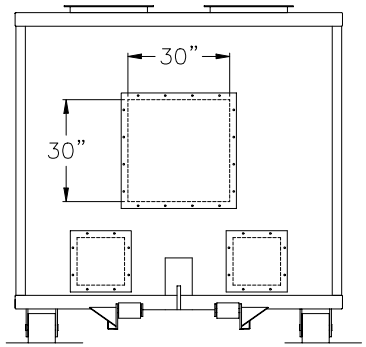


LEFT END VIEW

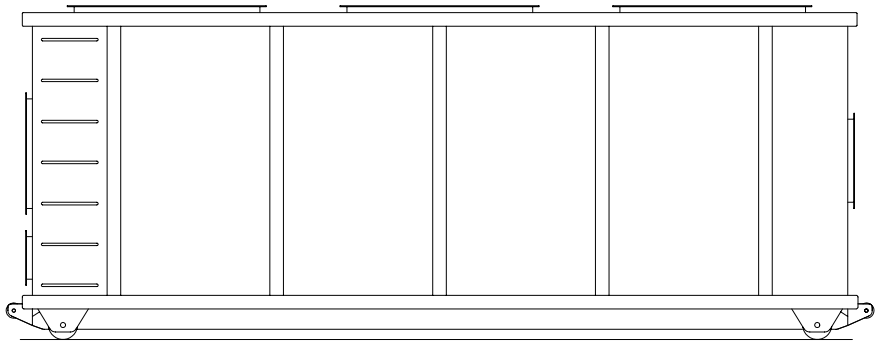

SIDE VIEW

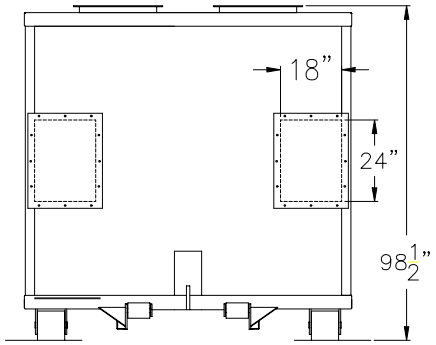


RIGHT END VIEW

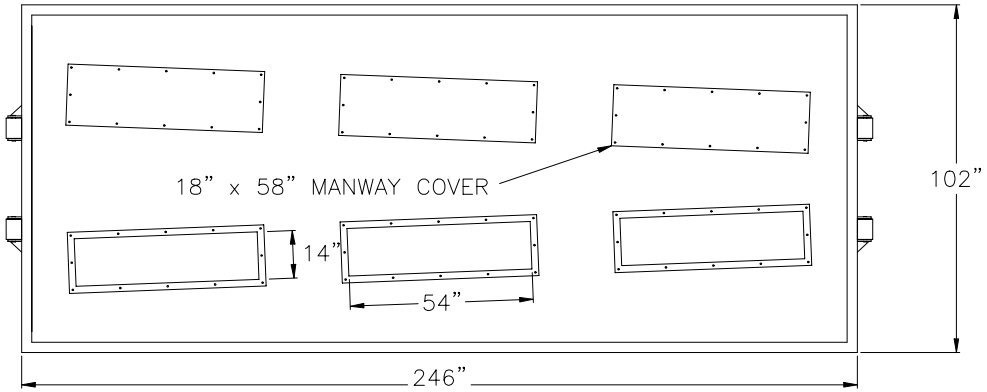


PLAN VIEW

## SPECIFICATIONS:

1. 20,000 SCFM MAX FLOW RATE
2. 12,000 LBS ACTIVATED CARBON
3. 30" X 30" INLET, 2-18" X 24" OUTLETS.
4. PRIMED AND PAINTED
5. RIBBED CARBON STEEL CONSTRUCTION
6. 8" GROUND ROLLERS FOR HANDLING EASE
7. 18" x 58" MANWAYS
8. BOXES TO BE GROUNDED BY BRAIDED COPPER #4
9. SHIPPING WEIGHT (WITH CARBON) APPROX.= 22,000 LB
10. PROVIDE SAMPLE PORTS 1/2" BALL VALVE WITH HOSE FITTING.

COMPANY CONFIDENTIAL
THIS DOCUMENT AND ALL INFORMATION CONTAINED HEREIN ARE THE PROPERTY OF THE USFILTER AND/OR ITS AFFILIATES ("USF"). THE DESIGN CONCEPTS AND INFORMATION CONTAINED HEREIN ARE PROPRIETARY TO USF AND ARE SUBMITTED IN CONFIDENCE. THEY ARE NOT TRANSFERABLE AND MUST BE USED ONLY FOR THE PURPOSE FOR WHICH THE DOCUMENT IS EXPRESSLY LOANED. THEY MUST NOT BE DISCLOSED, REPRODUCED, LOANED OR USED IN ANY OTHER MANNER WITHOUT THE EXPRESS WRITTEN CONSENT OF USF. IN NO EVENT SHALL THEY BE USED IN ANY MANNER DETRIMENTAL TO THE INTEREST OF USF. ALL PATENT RIGHTS ARE RESERVED. UPON THE DEMAND OF USF, THIS DOCUMENT, ALONG WITH ALL COPIES AND EXTRACTS, AND ALL RELATED NOTES AND ANALYSES, MUST BE RETURNED TO USF OR DESTROYED, AS INSTRUCTED BY USF. ACCEPTANCE OF THE DELIVERY OF THIS DOCUMENT CONSTITUTES AGREEMENT TO THESE TERMS AND CONDITIONS.

| | | |
|---|---|---|
| DESIGNER LLR | DATE 4-8-01 | TITLE RB12HV GENERAL ASSEMBLY |
| CHECKER | DATE | CLIENT |
| ENGINEER | DATE | |
| MANAGER | DATE | USFilter USFILTER/WESTATES RED BLUFF, CA 1-800-795-2664 |
| FILE: | | |
| SCALE: NONE | | PROJECT / DRAWING RB12HVGENASSY / SHEET OF / REV |

STD: 2-0600-8X11A | INTL REF:

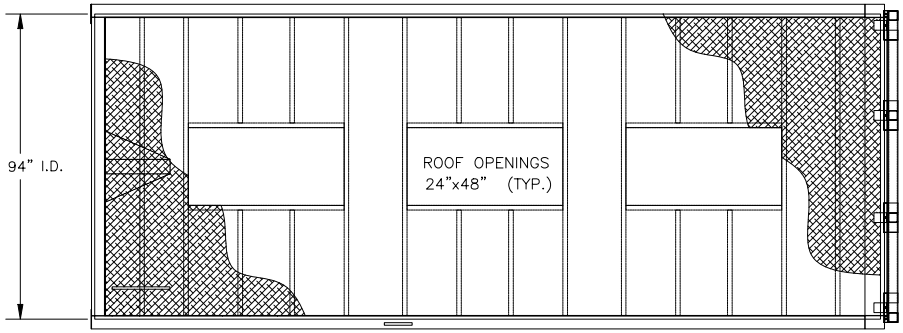


PLAN VIEW

## NOTES :

1. CONTINUOUS WELDED CONSTRUCTION.
2. EPOXY PRIMED INTERIOR AND EXTERIOR PRIMED AND FINISHED WITH POLYURETHANE.
3. TOP HINGED TAILGATE.
4. VESSEL WEIGHT: 10,500 LBS.
5. VESSEL WEIGHT W/ CARBON: 30,500 LBS.
7. FLOWRATE 12,000 CFM MAX.

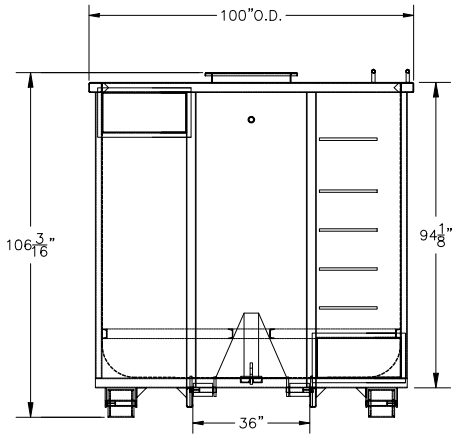


FRONT VIEW

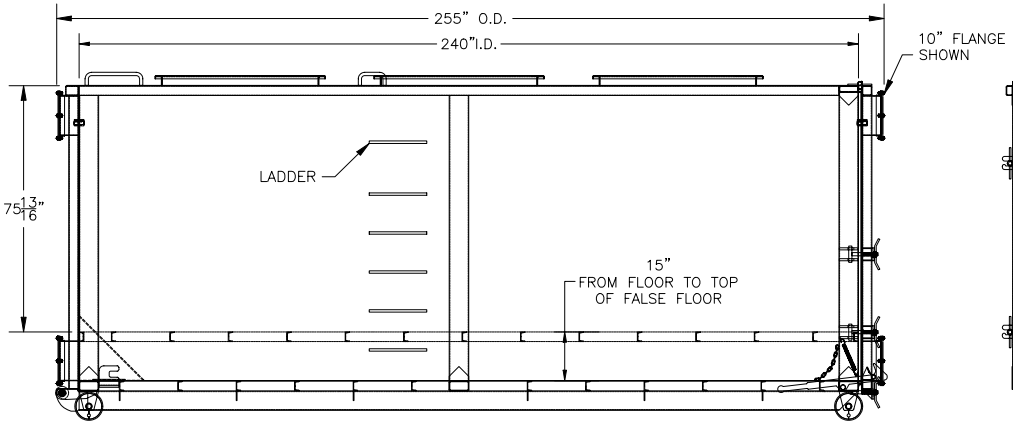


SIDE VIEW

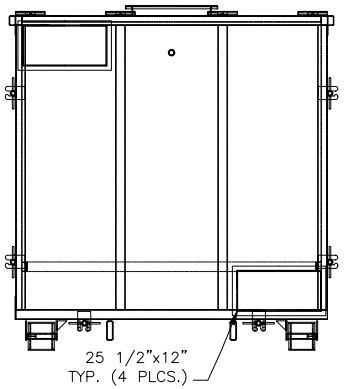


REAR VIEW

COMPANY CONFIDENTIAL
THIS DOCUMENT AND ALL INFORMATION CONTAINED HEREIN ARE THE PROPERTY OF THE USFILTER AND/OR ITS AFFILIATES ("USF"). THE DESIGN CONCEPTS AND INFORMATION CONTAINED HEREIN ARE PROPRIETARY TO USF AND ARE SUBMITTED IN CONFIDENCE. THEY ARE NOT TRANSFERABLE AND MUST BE USED ONLY FOR THE PURPOSE FOR WHICH THE DOCUMENT IS EXPRESSLY LOANED. THEY MUST NOT BE DISCLOSED, REPRODUCED, LOANED OR USED IN ANY OTHER MANNER WITHOUT THE EXPRESS WRITTEN CONSENT OF USF. IN NO EVENT SHALL THEY BE USED IN ANY MANNER DETRIMENTAL TO THE INTEREST OF USF. ALL PATENT RIGHTS ARE RESERVED. UPON THE DEMAND OF USF, THIS DOCUMENT, ALONG WITH ALL COPIES AND EXTRACTS, AND ALL RELATED NOTES AND ANALYSES, MUST BE RETURNED TO USF OR DESTROYED, AS INSTRUCTED BY USF. ACCEPTANCE OF THE DELIVERY OF THIS DOCUMENT CONSTITUTES AGREEMENT TO THESE TERMS AND CONDITIONS.

| DESIGNER | DATE |
|---|---|
| ESP | 4-9-01 |
| CHECKER | DATE |
| LLR | 4-9-01 |
| ENGINEER | DATE |
| MANAGER | DATE |
| FILE: | |
| SCALE: NONE | |

TITLE: RB20 GENERAL ASSEMBLEY

CLIENT:

USFilter

USFILTER/WESTATES
RED BLUFF, CA
1-800-795-2664

| PROJECT | DRAWING | SHEET | REV |
|---|---|---|---|
| | RB20 8X11 | OF | |

New drawing

| ITEM | QTY | DESCRIPTION |
|---|---|---|
| 1 | 1 | BODY & FRAME SEE DRG. #2220A (BODY MAT-.188/.203) |
| 2 | 4 | KNAPPCO LM20 DOMES W/ BUNA-N GASKETS - HINGE TO |
| – | – | STREETSIDE |
| 3 | 11 | 2" ULTRAFLO VALVES- (7) IN WATER LINE & (4) IN DEWATER |
| – | – | LINE.- MODEL 400 W/ NITRILE SEATS |
| 4 | 2 | 3" ULTRAFLO VALVES- MODEL 400 W/NITRILE SEATS |
| 5 | 1 | 2" BAYCO PRESSURE RELIEF VALVE SET AR 15 P.S.I |
| 6 | 1 | 3" ALUM. TOP AIR PIPE |
| 7 | 1 | 3" COUPLER & PLUG STREETSIDE |
| 8 | 1 | 3" MALE ADAPTOR DUMMY CURBSIDE |
| 9 | 1 | HOSE HOOK- ADJUSTABLE |
| 10 | 2 | 3" KNAPPCO SWING CHECK VALVES |
| 11 | 2 | 4" STL. STEEL LONG RADIUS WELD 90° ELBOWS |
| 12 | 1 | 2" MALE ADAPTOR & CAP AT END OF 2" WATER LINE |
| 13 | 8 | 2" VICTAULIC COUPLINGS W/ BUNA-N GASKETS |
| 14 | – | 2" SCH. 40 ALUM. PIPE WATER LINE |
| 15 | 14 | 4" VICTAULIC COUPLINGS W/ BUNA-N GASKETS |
| 16 | – | 4" SCH. 40 ALUM. PIPE |
| 17 | 1 | 4" TOP LOAD LINE TO ENTER EACH OF 3-COMPTS. AT |
| | | TOP CURBSIDE (SEE DRWG. #2220C) |
| 18 | 4 | 12" BOTTOM DROP ASSY. SEE DRWG. #2220D |
| 19 | 4 | 5" ULTRAFLO VALVES W/NITRILE SEATS |
| 20 | 4 | 5" X 5" PENTRON TEES W/OUT DOORS - W/ VIC. ENDS |
| 21 | 7 | 5" VICTAULIC COUPLERS W/ BUNA-N GASKETS |
| 22 | – | 5" SCH 40 DISCHARGE PIPE TO REAR UNDER AXLE |
| 23 | 2 | 5" X 4" REDUCERS W/ (2) 4" MALE ADAPTORS & CAPS |
| | | (1) EACH FRONT AND REAR ON DISCHARGE LINE. |

| ITEM | QTY | DESCRIPTION |
|---|---|---|
| 24 | 1 | 2" MANIFOLD ALUM. PIPE SEE DRWG. #2220C |
| 25 | 4 | 4" ULTRAFLO VALVES-MODEL 400 W/ NITRILE SEATS |
| 26 | 4 | 4" MALE ADAPTORS & CAPS ON END OF 4" LOAD LINE & |
| | | 4" DEWATER LINE |
| 27 | 1 | 4" ALUM. SCH. 40 PIPE DEWATER LINE SEE VIEW B - B |
| 28 | 1 | LANDING GEAR- 2 SPEED-S/S CRANK #LPR-30-444 |
| 29 | 2 | SUSPENSION- HENDRICKSON-TURNER HT-230-17-004 |
| | | 17" RIDE HT. |
| 30 | 2 | AXLES- DANA 5" RD.- 1/2" WALL- 71 1/2" TRACK |
| | – | W/CHICAGO RAWHIDE OIL SEALS |
| | 4 | 5½" GUNITE AUTOMATIC SLACKS |
| | 4 | OUTBOARD CENTRIFUSE DRUMS- ALUM. HUBS |
| | 4 | 30/30 COMBO MGM BRAKE CHAMBERS |
| 31 | 8 | WHEELS- ALCOA ALUM.- 8.25 X 24.5 |
| 32 | 8 | TIRES- 285/75R24.5 BRIDGESTONE R-194 |
| 33 | 2 | ALUM. LIGHT HOUSINGS PER STD.- 605 |
| 34 | 2 | TOE RAILS W/ 1" ALUM. PIPE FULL LENGTH |
| 35 | – | NON-SLIP PAINT BETWEEN TOE RAILS FULL LENGTH |
| 36 | 1 | ALUM. LADDER W/ 1" PIPE & 4 3/4" GRIP STRUT STEPS |
| 37 | 1 | GRIPSTRUT PLATFORM 24" WIDE X 36" LG. USE (2) |
| | | 11 3/4" WIDE GRIPSTRUT PIECES |
| 38 | 4 | HOSE TUBE- 7" X 20'-0", 2 EA. SIDE-DOORS EA. END |
| 39 | 4 | AIR PRESSURE GAUGES (2) 1N (2) ALUM. BOXES W/ LIGHT- |
| | | 3½" DIA. LIQUID FILLED. 0 TO 30 P.S.I.(TANK & LINE) |
| 40 | 1 | KINGPIN PLATE PER STD.- 419 |
| 41 | 2 | ALUM. FRONT FENDERS W/ RADIUS |
| 42 | 2 | ALUM. TANDEM FENDERS |

| ITEM | QTY | DESCRIPTION |
|---|---|---|
| 43 | 4 | TRUCK LITE STOP/TAIL/TURN RED LIGHTS |
| 44 | 6 | TRUCK LITE MARKER LIGHTS (2) RED & (4) AMBER |
| 45 | 1 | TRUCK LITE I. D. CLUSTER |
| 46 | 3 | INTERNAL RINGS - 3" X 3/8" FLAT BARS ON EDGE. |
| | | BARS ARE PERPENDICULAR TO SHELL |
| 47 | 2 | SANITARY BULKHEADS- 0.250" ALUM. |
| 48 | 1 | TOOL BOX- 24" H. X 36" L. X 24" DP. - STREETSIDE |
| | | SEE DRWG. #2220B |
| 49 | 4 | 2" N.P.T. NIPPLES INSIDE TANK -EXTEND INTO TANK |
| | | 3 TO 4" |
| 50 | 1 | ROCKWELL WABCO 4S/2M ABS KIT W/ STOP LIGHT CONTROL. |
| 51 | 1 | BETTS PS-1 DOCUMENT HOLDER |
| 52 | 4 | PLACARD HOLDERS- SLIDE IN STYLE- LOCATE (1) EACH END |
| | | AND (1) EACH SIDE AT CENTER. |
| 53 | 1 | WIRING HARNES KIT W/ 7-WAY RECEPTACLE USA #602001 |
| 54 | 4 | BEALL MUD FLAPS |
| 55 | – | PAINT STEEL PARTS WHEELABRATOR BLUE PAINTONE MATCHING |
| | | SYSTEM #286,C 100,M 60, K 6 |
| 56 | 1 | 3" VICTAULIC COUPLING W/ BUNA-N GASKETS |

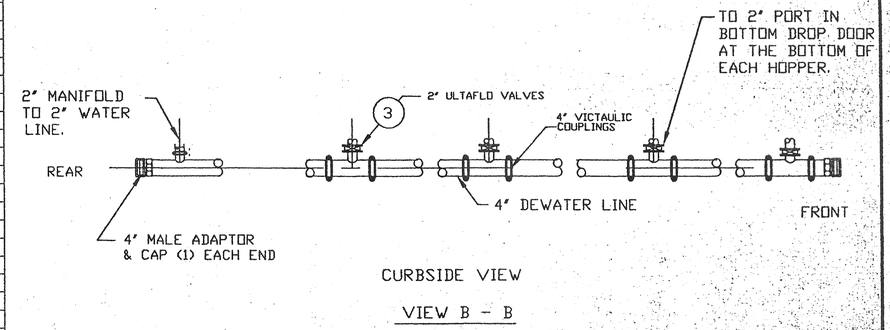


CURBSIDE VIEW

VIEW B - B

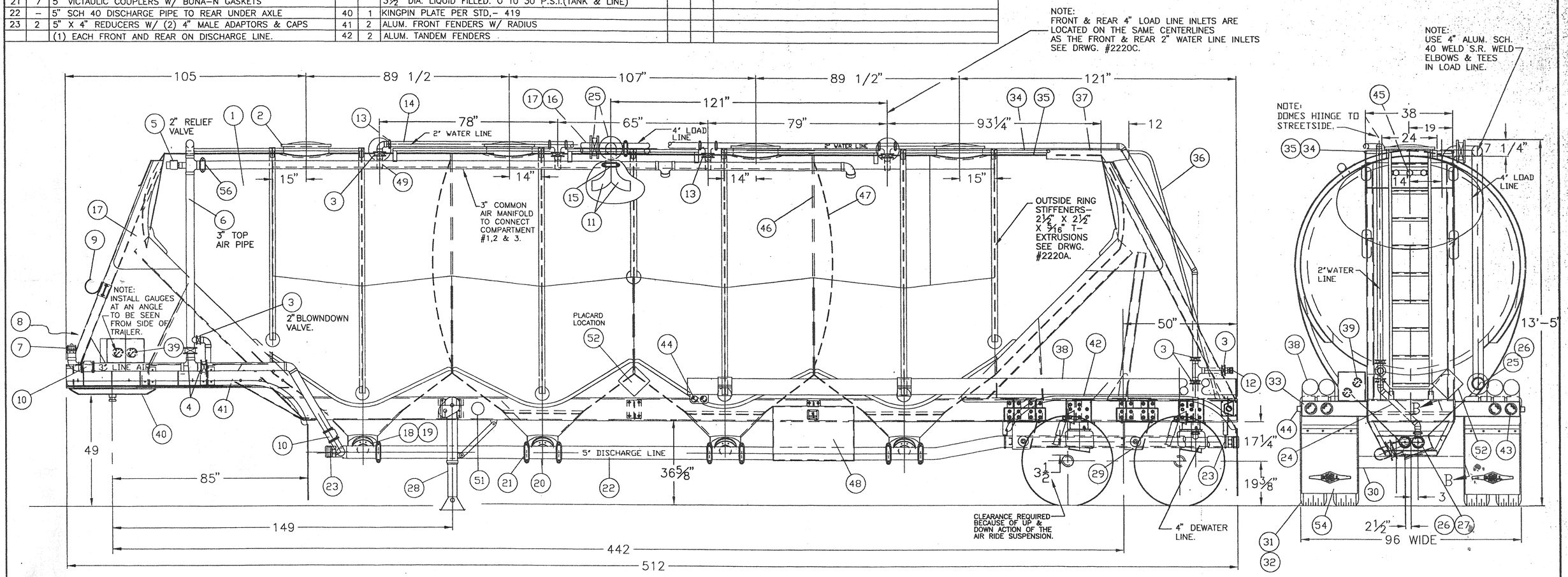


125° MAXIMUM TEMPERATURE

CUSTOMER APPROVAL
BY: _____
DATE: _____

NOTE:
GRIND ALL INTERIOR BUTT WELDS SMOOTH IN PREPARATION FOR A LINER.

(50) ABS KIT

(53) WIRING HARNESS KIT

(55) PAINT

| DOT SPECIFICATION: | SERIAL NUMBER: | Beall Trailers of Oregon, Inc. |
|---|---|---|
| N/A | PS27472 &PS27473 | THIS DOCUMENT CONTAINS PROPRIETARY INFORMATION BELONGING TO BEALL TRAILERS, INC. AND SUCH INFORMATION MAY NOT BE DISCLOSED TO OTHERS, REPRODUCED, COPIED OR USED WITHOUT WRITTEN AUTHORITY FROM BEALL TRAILERS, INC. |

| DATE | SYM | REVISION RECORD | BY |
|---|---|---|---|
| | – | THRU CHANGE ORDER #2 | LA |

| | | |
|---|---|---|
| WHEELABRATOR CLEAN AIR SYSTEMS F.O. #27472 & 27473-95 | SCALE 1:20 | DRAWN BY LA / APPROVED BY BM |
| TITLE: 1800 CU. FT. ALUMINUM PNEUMATIC SEMI | | |
| REFERENCE | DATE 10-25-95 | DRAWING NUMBER 2220 |

STD: 2-0600-8X11A | INTL REF:

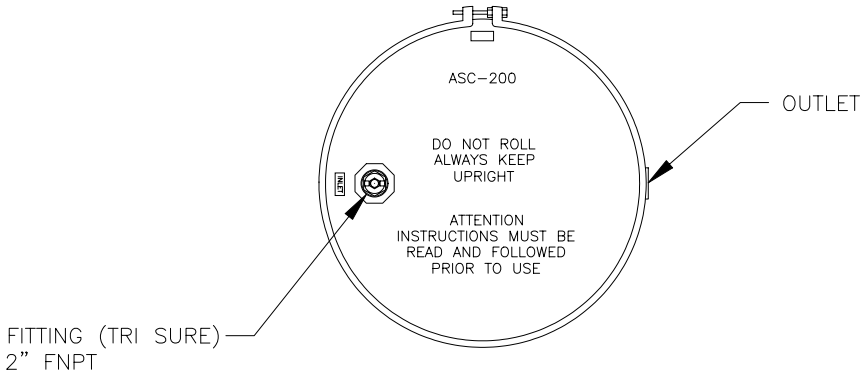


PLAN VIEW

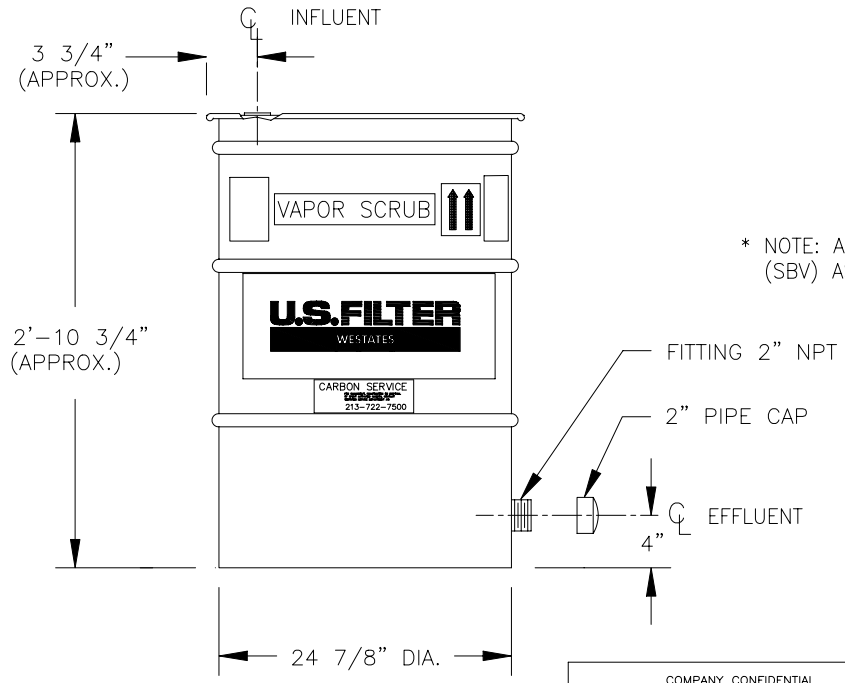


PLAN VIEW

NOTES:

1. CARBON:
   AS REQUIRED.
2. MATERIALS OF CONSTRUCTION:
   VESSEL: .....CARBON STEEL
   EXTERNAL COATING: .....HIGH GLOSS PAINT, WESTATES BLUE
   INTERNAL COATING: .....CURED EPOXY
   INTERNAL DISTRIBUTION: .....PVC
3. SPECIFICATIONS:
   FLOW * - CFM (MAX): ..... 100
   PRESSURE - PSIG (MAX): ..... 10
   TEMPERATURE - DEG F (MAX): ..... 140
   CARBON FILL VOLUME - CU FT: ..... 6.9
   CROSS SECTION - SQ FT: ..... 2.8
   SHIPPING WEIGHT - LBS: (APPROX,) ..... 250
   OPERATING WEIGHT - LBS: (APPROX,) ..... 500

* NOTE: ACTUAL DESIGN SHOULD BE BASED ON SUPERFICIAL BED VELOCITY (SBV) AS REQUIRED FOR SPECIFIC CONTAMINANTS.

COMPANY CONFIDENTIAL
THIS DOCUMENT AND ALL INFORMATION CONTAINED HEREIN ARE THE PROPERTY OF THE USFILTER AND/OR ITS AFFILIATES ("USF"). THE DESIGN CONCEPTS AND INFORMATION CONTAINED HEREIN ARE PROPRIETARY TO USF AND ARE SUBMITTED IN CONFIDENCE. THEY ARE NOT TRANSFERABLE AND MUST BE USED ONLY FOR THE PURPOSE FOR WHICH THE DOCUMENT IS EXPRESSLY LOANED. THEY MUST NOT BE DISCLOSED, REPRODUCED, LOANED OR USED IN ANY OTHER MANNER WITHOUT THE EXPRESS WRITTEN CONSENT OF USF. IN NO EVENT SHALL THEY BE USED IN ANY MANNER DETRIMENTAL TO THE INTEREST OF USF. ALL PATENT RIGHTS ARE RESERVED. UPON THE DEMAND OF USF, THIS DOCUMENT, ALONG WITH ALL COPIES AND EXTRACTS, AND ALL RELATED NOTES AND ANALYSES, MUST BE RETURNED TO USF OR DESTROYED, AS INSTRUCTED BY USF. ACCEPTANCE OF THE DELIVERY OF THIS DOCUMENT CONSTITUTES AGREEMENT TO THESE TERMS AND CONDITIONS.

| | | |
|---|---|---|
| DESIGNER LLR | DATE 4-8-01 | TITLE VSC200 GENERAL ASSEMBLY |
| CHECKER | DATE | CLIENT TBD |
| ENGINEER | DATE | |
| MANAGER | DATE | USFilter USFILTER/WESTATES RED BLUFF, CA 1-800-795-2664 |
| FILE: | | |
| SCALE: NONE | | PROJECT / DRAWING VSC200GENASSY / SHEET OF / REV |

STD: 2-0600-8X11A | INTL REF:

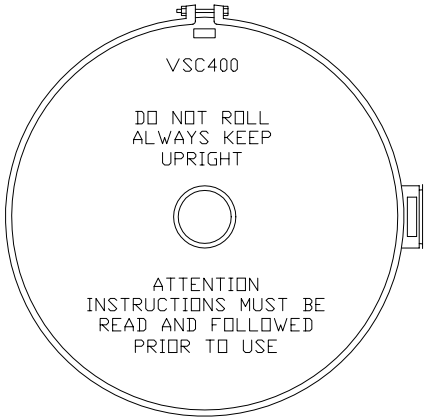


PLAN

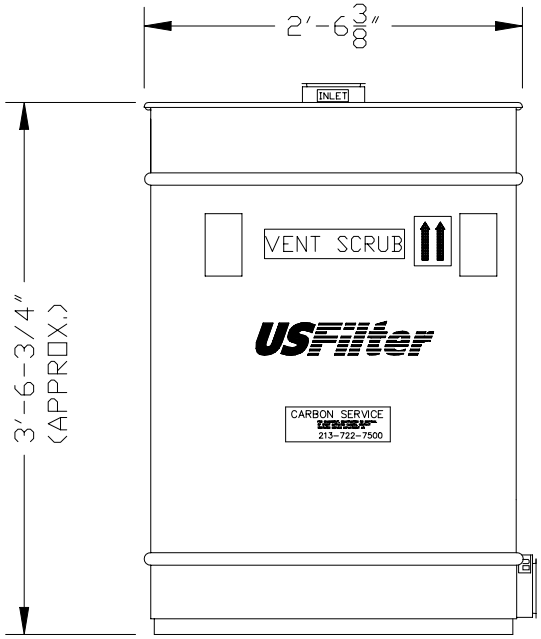


ELEVATION

# NOTES:

1. CARBON:
   AS REQUIRED.
2. MATERIALS OF CONSTRUCTION:
   VESSEL: .....CARBON STEEL
   EXTERNAL COATING: .....HIGH GLOSS PAINT, WESTATES BLUE
   INTERNAL COATING: .....CURED EPOXY
   INTERNAL DISTRIBUTION: .....PVC
3. SPECIFICATIONS:
   FLOW * – CFM (MAX): ..... 300
   PRESSURE – PSIG (MAX): ..... 6
   TEMPERATURE – DEG F (MAX): ..... 140
   CARBON FILL VOLUME – CU FT: ..... 14.0
   CROSS SECTION – SQ FT: ..... 4.9
   SHIPPING WEIGHT – LBS: (APPROX,) ..... 480
   OPERATING WEIGHT – LBS: (APPROX,) ..... 480

* NOTE: ACTUAL DESIGN SHOULD BE BASED ON SUPERFICIAL BED VELOCITY (SBV) AS REQUIRED FOR SPECIFIC CONTAMINANTS.

COMPANY CONFIDENTIAL
THIS DOCUMENT AND ALL INFORMATION CONTAINED HEREIN ARE THE PROPERTY OF THE USFILTER AND/OR ITS AFFILIATES ("USF"). THE DESIGN CONCEPTS AND INFORMATION CONTAINED HEREIN ARE PROPRIETARY TO USF AND ARE SUBMITTED IN CONFIDENCE. THEY ARE NOT TRANSFERABLE AND MUST BE USED ONLY FOR THE PURPOSE FOR WHICH THE DOCUMENT IS EXPRESSLY LOANED. THEY MUST NOT BE DISCLOSED, REPRODUCED, LOANED OR USED IN ANY OTHER MANNER WITHOUT THE EXPRESS WRITTEN CONSENT OF USF. IN NO EVENT SHALL THEY BE USED IN ANY MANNER DETRIMENTAL TO THE INTEREST OF USF. ALL PATENT RIGHTS ARE RESERVED. UPON THE DEMAND OF USF, THIS DOCUMENT, ALONG WITH ALL COPIES AND EXTRACTS, AND ALL RELATED NOTES AND ANALYSES, MUST BE RETURNED TO USF OR DESTROYED, AS INSTRUCTED BY USF. ACCEPTANCE OF THE DELIVERY OF THIS DOCUMENT CONSTITUTES AGREEMENT TO THESE TERMS AND CONDITIONS.

| DESIGNER | DATE |
|---|---|
| AJA | 5-2-01 |
| CHECKER | DATE |
| ENGINEER | DATE |
| MANAGER | DATE |
| FILE: | |
| SCALE: | |

TITLE: VSC400 GENERAL ASSEMBLY

CLIENT

USFilter
USFILTER/WESTATES
RED BLUFF, CA
1-800-795-2664

| PROJECT | DRAWING | SHEET | REV |
|---|---|---|---|
| | VSC400.DWG | 1 OF 1 | |

STD: 2-0600-8X11A | INTL REF:

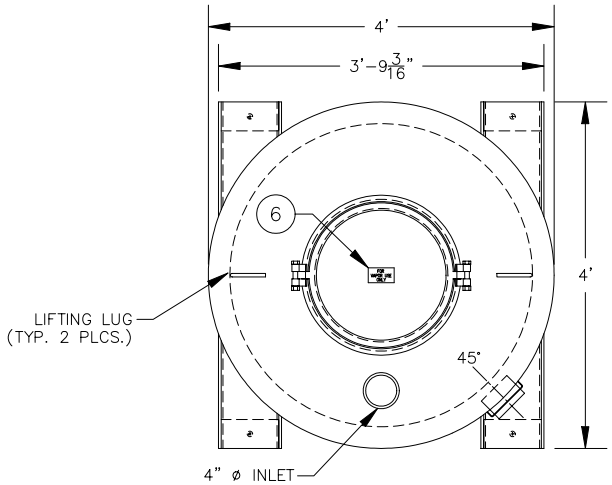


PLAN VIEW

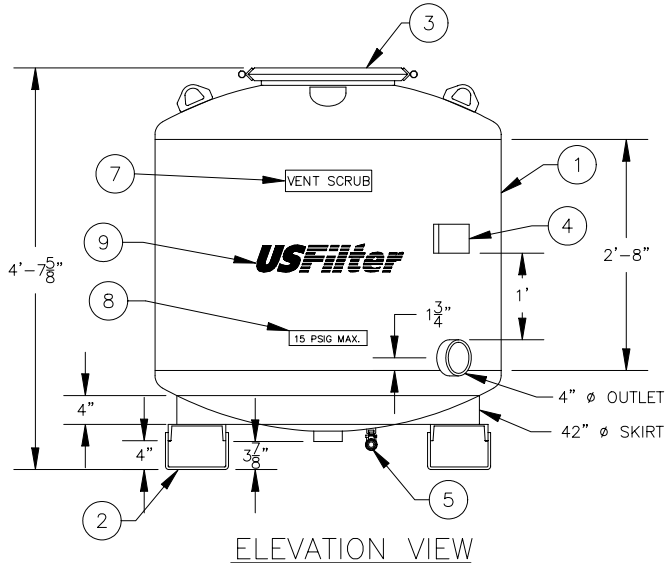


ELEVATION VIEW

## LIST OF COMPONENTS

| ITEM | QTY | DESCRIPTION |
|---|---|---|
| 1 | 1 | TANK ASSEMBLY |
| 2 | 1 | SKID ASSEMBLY |
| 3 | 1 | MANWAY ASSEMBLY, 18" DIA. |
| 4 | 1 | PLATE, I.D. & SERIAL NUMBER |
| 5 | 1 | BRONZE BALL VALVE, 3/4" |
| 6 | 1 | DECAL, "FOR VAPOR USE ONLY", 2 1/2" x 4 1/4" |
| 7 | 2 | DECAL, "VENT-SCRUB", WHITE MYLAR |
| 8 | 2 | DECAL, "15 PSIG MAX", WHITE MYLAR |
| 9 | 2 | DECAL, "USFILTER/WESTATES" WHITE MYLAR W/BLUE LETTERS |

## NOTES:

1. DESIGN DATA:
   48" DIAMETER PRESSURE VESSEL-15 PSIG(MAX)
   VACUUM RATING - 15" HG
   @ 120°F-NOT ASME CODE STAMPED FOR VAPOR USE ONLY
   600 CFM
   1000 LBS. ACTIVATED CARBON

2. MATERIAL:
   HEADS - SA 36-HR
   SHELL - SA 36-HR
   SKID - SA 36-HR

3. SURFACE PREPARATION:
   INTERIOR:
   SANDBLAST: SSPC-SP-5 WHITE METAL
   ABRASIVE: GARNET OR GRIT - PROFILE: 1.5-2 MILS
   COATING: 3M BRAND SCOTCHKOTE 134
   THICKNESS: 10-15 DFMT - COLOR: GREEN
   EXTERIOR:
   SANDBLAST: SSPC-SP-10 NEAR WHITE METAL
   ABRASIVE: GARNET OR GRIT - PROFILE: 1.5-2 MILS
   PRIMER COAT: RUST PREVENTATIVE EPOXY PRIMER (CARBOLINE 893)
   THICKNESS: 4-6 DFMT - COLOR: RED
   FINISH COAT: HIGH BUILD POLYURETHANE (CARBOLINE 134HG)
   THICKNESS: 3-4 DFMT - COLOR: WHITE (FED. I.D.#17925)

4. LIFTING REQUIREMENTS:
   5200 LBS. MINIMUM RATING.
   EST. WEIGHTS:
   890 LBS. - EMPTY VESSEL
   1890 LBS. - WITH CARBON


COMPANY CONFIDENTIAL
THIS DOCUMENT AND ALL INFORMATION CONTAINED HEREIN ARE THE PROPERTY OF THE USFILTER AND/OR ITS AFFILIATES ("USF"). THE DESIGN CONCEPTS AND INFORMATION CONTAINED HEREIN ARE PROPRIETARY TO USF AND ARE SUBMITTED IN CONFIDENCE. THEY ARE NOT TRANSFERABLE AND MUST BE USED ONLY FOR THE PURPOSE FOR WHICH THE DOCUMENT IS EXPRESSLY LOANED. THEY MUST NOT BE DISCLOSED, REPRODUCED, LOANED OR USED IN ANY OTHER MANNER WITHOUT THE EXPRESS WRITTEN CONSENT OF USF. IN NO EVENT SHALL THEY BE USED IN ANY MANNER DETRIMENTAL TO THE INTEREST OF USF. ALL PATENT RIGHTS ARE RESERVED. UPON THE DEMAND OF USF, THIS DOCUMENT, ALONG WITH ALL COPIES AND EXTRACTS, AND ALL RELATED NOTES AND ANALYSES, MUST BE RETURNED TO USF OR DESTROYED, AS INSTRUCTED BY USF. ACCEPTANCE OF THE DELIVERY OF THIS DOCUMENT CONSTITUTES AGREEMENT TO THESE TERMS AND CONDITIONS.


| DESIGNER | DATE |
|---|---|
| AJA | 10-8-01 |
| CHECKER | DATE |
| ENGINEER | DATE |
| MANAGER | DATE |
| FILE: | |
| SCALE: NONE | |

TITLE: VSC1000 GENERAL ASSEMBLY

CLIENT

USFilter
USFILTER/WESTATES
RED BLUFF, CA
1-800-795-2664

| PROJECT | DRAWING | SHEET | REV |
|---|---|---|---|
| | VSC1000SHEET1.DWG | 1 OF 2 | |

STD: 2-0600-8X11A | INTL REF:

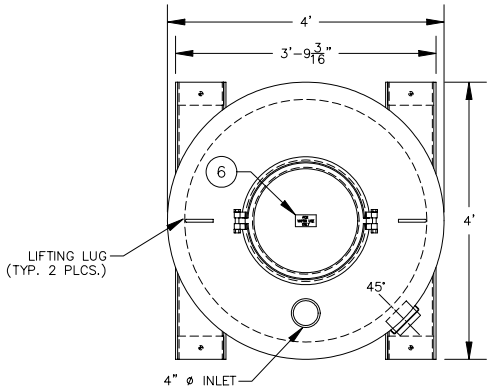


PLAN VIEW

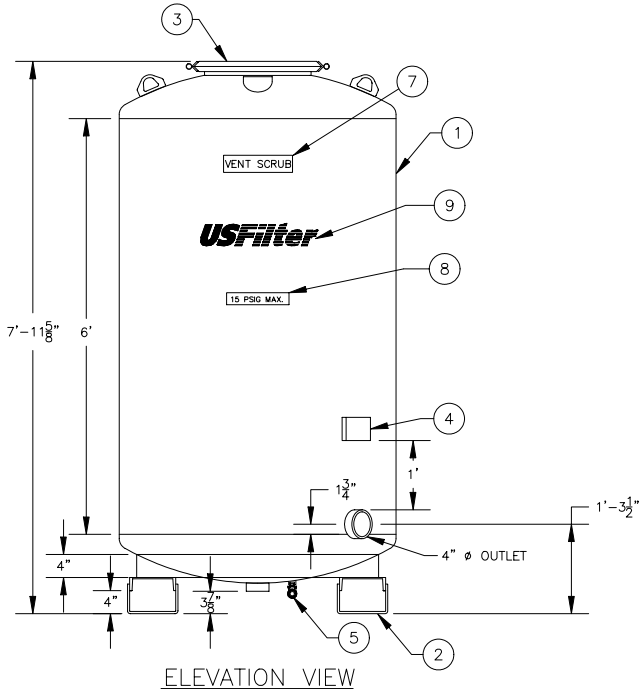


ELEVATION VIEW

## LIST OF COMPONENTS

| ITEM | QTY | DESCRIPTION |
|---|---|---|
| 1 | 1 | TANK ASSEMBLY |
| 2 | 1 | SKID ASSEMBLY |
| 3 | 1 | MANWAY ASSEMBLY, 18" DIA. |
| 4 | 1 | PLATE, I.D. & SERIAL NUMBER |
| 5 | 1 | BRONZE BALL VALVE, 3/4" |
| 6 | 1 | DECAL, "FOR VAPOR USE ONLY", 2 1/2" x 4 1/4" |
| 7 | 2 | DECAL, "VENT -SCRUB", WHITE MYLAR |
| 8 | 2 | DECAL, "15 PSIG MAX", WHITE MYLAR |
| 9 | 2 | DECAL, "USFILTER/WESTATES" WHITE MYLAR W/BLUE LETTERS |

NOTES:

1. DESIGN DATA:
   48" DIAMETER PRESSURE VESSEL-15 PSIG(MAX)
   VACUUM RATING - 15" HG
   @ 120°F-NOT ASME CODE STAMPED FOR VAPOR USE ONLY
   600 CFM
   2000 LBS. ACTIVATED CARBON

2. MATERIAL:
   HEADS - SA 36-HR
   SHELL - SA 36-HR
   SKID - SA 36-HR

3. SURFACE PREPARATION:
   INTERIOR:
   SANDBLAST: SSPC-SP-5 WHITE METAL
   ABRASIVE: GARNET OR GRIT - PROFILE: 1.5-2 MILS
   COATING: 3M BRAND SCOTCHKOTE 134
   THICKNESS: 10-15 DFMT - COLOR: GREEN
   EXTERIOR:
   SANDBLAST: SSPC-SP-10 NEAR WHITE METAL
   ABRASIVE: GARNET OR GRIT - PROFILE: 1.5-2 MILS
   PRIMER COAT: RUST PREVENTATIVE EPOXY PRIMER (CARBOLINE 893)
   THICKNESS: 4-6 DFMT - COLOR: RED
   FINISH COAT: HIGH BUILD POLYURETHANE (CARBOLINE 134HG)
   THICKNESS: 3-4 DFMT - COLOR: WHITE (FED. I.D.#17925)

4. LIFTING REQUIREMENTS:
   5200 LBS. MINIMUM RATING.
   EST. WEIGHTS:
   1190 LBS. - EMPTY VESSEL
   3190 LBS. - WITH CARBON

COMPANY CONFIDENTIAL
THIS DOCUMENT AND ALL INFORMATION CONTAINED HEREIN ARE THE PROPERTY OF THE USFILTER AND/OR ITS AFFILIATES ("USF"). THE DESIGN CONCEPTS AND INFORMATION CONTAINED HEREIN ARE PROPRIETARY TO USF AND ARE SUBMITTED IN CONFIDENCE. THEY ARE NOT TRANSFERABLE AND MUST BE USED ONLY FOR THE PURPOSE FOR WHICH THE DOCUMENT IS EXPRESSLY LOANED. THEY MUST NOT BE DISCLOSED, REPRODUCED, LOANED OR USED IN ANY OTHER MANNER WITHOUT THE EXPRESS WRITTEN CONSENT OF USF. IN NO EVENT SHALL THEY BE USED IN ANY MANNER DETRIMENTAL TO THE INTEREST OF USF. ALL PATENT RIGHTS ARE RESERVED. UPON THE DEMAND OF USF, THIS DOCUMENT, ALONG WITH ALL COPIES AND EXTRACTS, AND ALL RELATED NOTES AND ANALYSES, MUST BE RETURNED TO USF OR DESTROYED, AS INSTRUCTED BY USF. ACCEPTANCE OF THE DELIVERY OF THIS DOCUMENT CONSTITUTES AGREEMENT TO THESE TERMS AND CONDITIONS.

| DESIGNER | DATE |
|---|---|
| AJA | 10-8-01 |
| CHECKER | DATE |
| ENGINEER | DATE |
| MANAGER | DATE |
| FILE: | |
| SCALE: NONE | |

TITLE VSC2000
GENERAL ASSEMBLY

CLIENT

USFilter
USFILTER/WESTATES
RED BLUFF, CA
1-800-795-2664

| PROJECT | DRAWING | SHEET | REV |
|---|---|---|---|
| | VSC2000SHEET1.DWG | 1 OF 5 | |

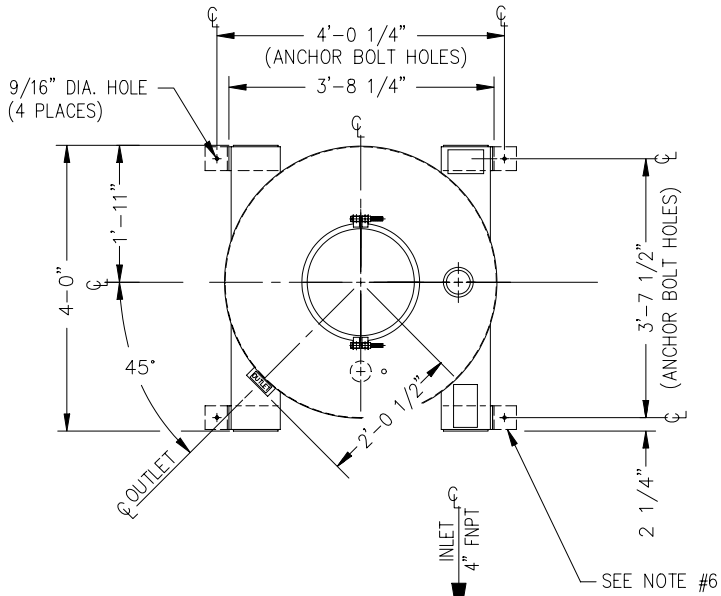


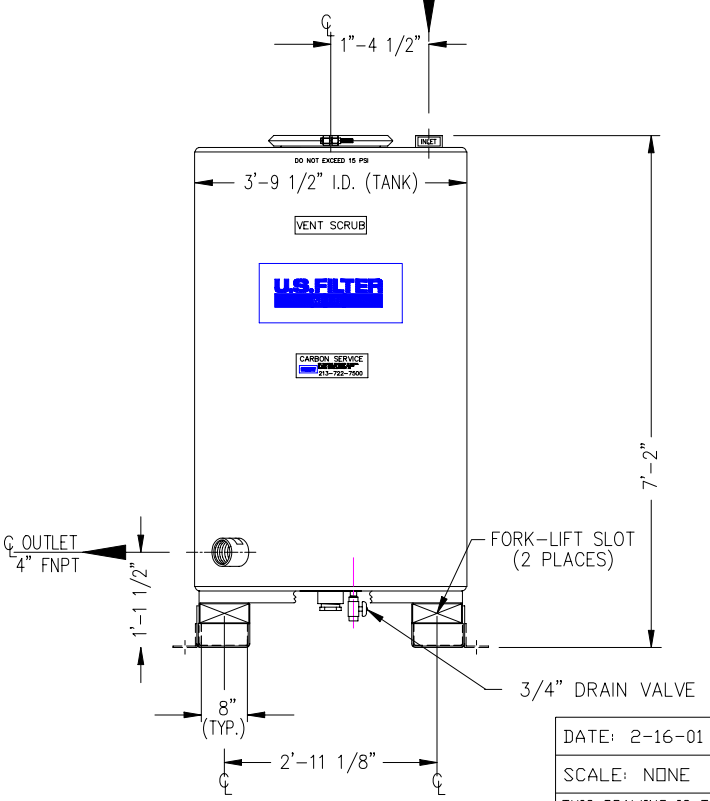


## NOTES:

1. DESIGN DATA:
   45 1/2" DIAMETER PRESSURE VESSEL – 15 PSIG (MAX)
   @ 120°F – NOT ASME CODE STAMPED
   FOR VAPOR USE ONLY, MAX. FLOW = 500 CFM
   63 CU. FT. ACTIVATED CARBON
   VACUUM = 6.0 INCH HG

2. MATERIAL:
   HEADS – 7 GA. CARBON STEEL
   SHELL – 10 GA. CARBON STEEL
   SKID – CARBON STEEL

3. SURFACE PREPARATION:
   INTERIOR COATING: FUSION BONDED EPOXY

   EXTERIOR COATING: PRIMER: (2) PART EPOXY PRIMER
   FINISH: ALIPHATIC POLYURETHANE FINISH, WHITE

4. APPROXIMATE WEIGHT:
   EMPTY VESSEL: ..... 740 LBS

5. THIS VESSEL COMPLIES WITH UN 11A.

6. SHOWN WITH OPTIONAL SEIZMIC ZONE 4 HOLD-DOWN LUGS. (PART #A11098)

| REV. | DATE | REVISION DESCRIPTION | DRAWN | CHK'D | ENG'R |
|---|---|---|---|---|---|

CUSTOMER:
XXXXXXXXX
XXXXXXXXX

U.S. FILTER WESTATES
11711 Reading Road
Red Bluff. CA 96080

DATE: 2-16-01
SCALE: NONE
LOCATION:
PROJECT No.
DRAWN: AJA
CHK'D:
ENG'R:

THIS DRAWING IS THE PROPERTY OF USFILTER AND CANNOT BE RE-PRODUCED OR DELIVERED TO OTHERS WITHOUT THE EXPRESS WRITTEN PERMISSION OF USFILTER CORP.

TITLE:
VAPOR SCRUB ASSEMBLY
VSC 2000

DWG No. VSC2000GENASSY.DWG
REV.

STD: 2-0600-8X11A | INTL REF:

# NOTES:

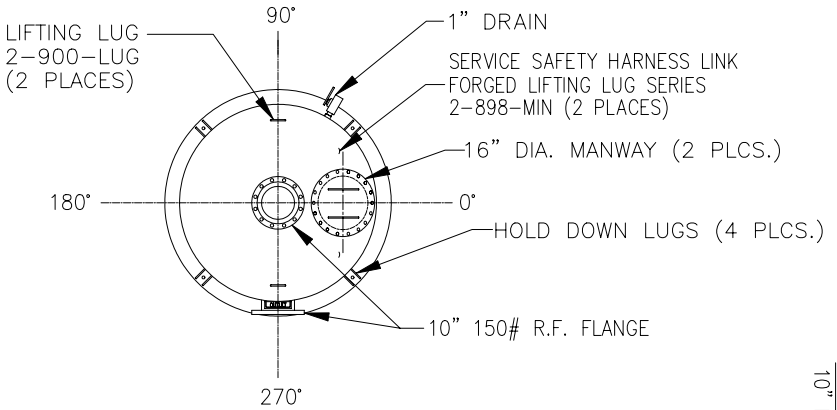


PLAN VIEW

1. DESIGN DATA:

   60" DIAMETER PRESSURE VESSEL – 5 PSIG (MAX.)
   @ 120°F – NOT ASME CODE STAMPED
   FOR VAPOR USE ONLY, MAX. FLOW = 1,500 CFM
   102 CU. FT. ACTIVATED CARBON

2. MATERIAL:

   CARBON STEEL

3. SURFACE PREPARATION:

   INTERIOR:
   SANDBLAST: SSPC-5 WHITE METAL
   ABRASIVE: STEEL GRIT – PROFILE 1.5-2.5 MILS
   COATING: CARBOLINE 891
   THIICKNESS: 10-15 MILLS – COLOR: WHITE

   EXTERIOR:
   SANDBLAST: SSPC-10 NEAR WHITE METAL
   ABRASIVE: STEEL GRIT – PROFILE 1.5-2.5 MILS
   PRIMER COAT: CHEMICAL RESISTANCE CATALYZED EPOXY COATING
   THICKNESS 3-5 MILS – COLOR: GREY
   FINISH COAT: POLYURETHANE PROTECTIVE FINISH
   THICKNESS 2-4 MILS – COLOR: WHITE
   FEDERAL STANDARD COLOR 17925

4. APPROXIMATE WEIGHT:

   EMPTY VESSEL: ..... 4,400 LBS
   OPERATING ..... 7,400 LBS

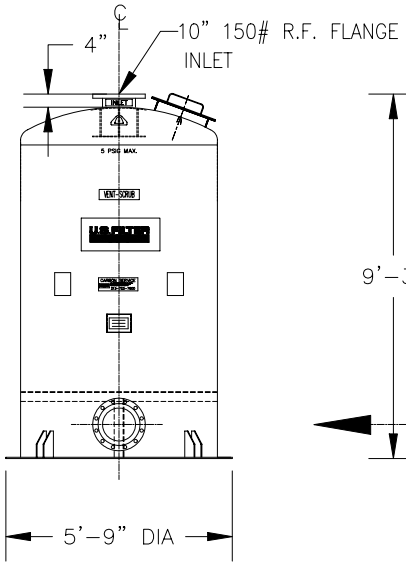


ELEVATION VIEW

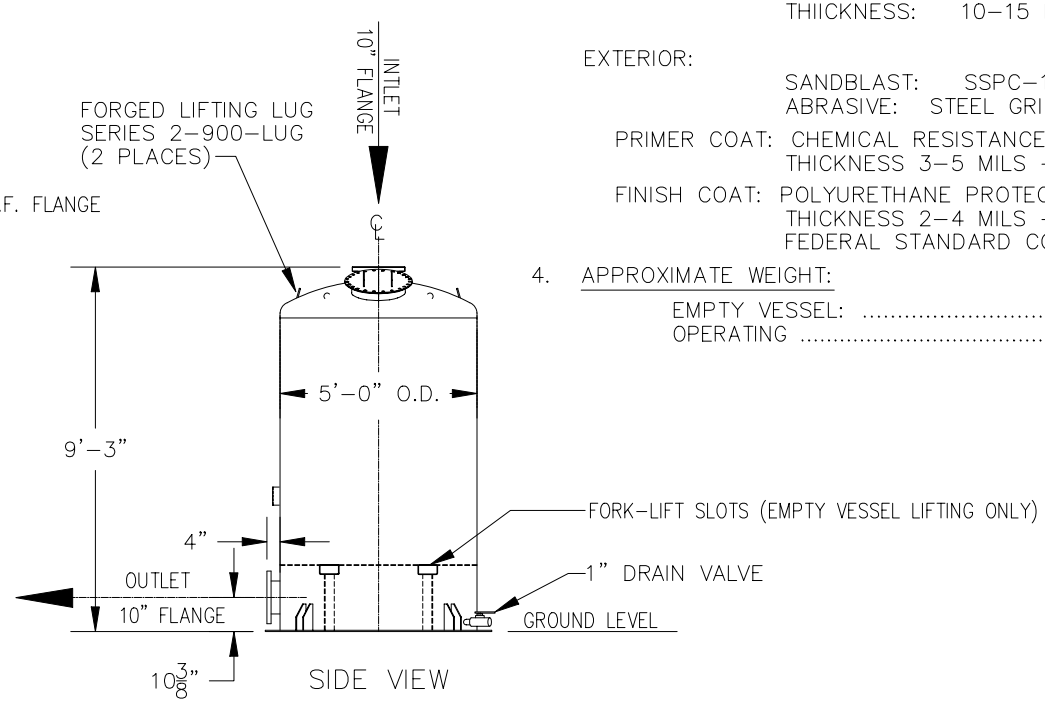


SIDE VIEW


COMPANY CONFIDENTIAL
THIS DOCUMENT AND ALL INFORMATION CONTAINED HEREIN ARE THE PROPERTY OF THE USFILTER AND/OR ITS AFFILIATES ("USF"). THE DESIGN CONCEPTS AND INFORMATION CONTAINED HEREIN ARE PROPRIETARY TO USF AND ARE SUBMITTED IN CONFIDENCE. THEY ARE NOT TRANSFERABLE AND MUST BE USED ONLY FOR THE PURPOSE FOR WHICH THE DOCUMENT IS EXPRESSLY LOANED. THEY MUST NOT BE DISCLOSED, REPRODUCED, LOANED OR USED IN ANY OTHER MANNER WITHOUT THE EXPRESS WRITTEN CONSENT OF USF. IN NO EVENT SHALL THEY BE USED IN ANY MANNER DETRIMENTAL TO THE INTEREST OF USF. ALL PATENT RIGHTS ARE RESERVED. UPON THE DEMAND OF USF, THIS DOCUMENT, ALONG WITH ALL COPIES AND EXTRACTS, AND ALL RELATED NOTES AND ANALYSES, MUST BE RETURNED TO USF OR DESTROYED, AS INSTRUCTED BY USF. ACCEPTANCE OF THE DELIVERY OF THIS DOCUMENT CONSTITUTES AGREEMENT TO THESE TERMS AND CONDITIONS.


| DESIGNER | DATE | TITLE VSC3000 GENERAL ASSEMBLY |
|---|---|---|
| LLR | 7-6-01 | |
| CHECKER | DATE | CLIENT |
| ENGINEER | DATE | |
| MANAGER | DATE | USFilter — USFILTER/WESTATES, RED BLUFF, CA, 1-800-795-2664 |
| FILE: | | |
| SCALE: NONE | | |

| PROJECT | DRAWING | SHEET | REV |
|---|---|---|---|
| | VSC3000GENASSY | OF | |