3M CWA - 10

Please print or type in the unshaded areas only.

Form Approved. OMB No. 2040-0086.

FORM 1 GENERAL

EPA

U.S. ENVIRONMENTAL PROTECTION AGENCY

GENERAL INFORMATION

Consolidated Permits Program

(Read the "General Instructions" before starting.)

I. EPA I.D. NUMBER: F ILD054236443 D

LABEL ITEMS	
I. EPA I.D. NUMBER	ILD054236443
III. FACILITY NAME	3M Cordova
V. FACILITY MAILING ADDRESS	22614 Route 84 North Cordova, Illinois 61254
VI. FACILITY LOCATION	

GENERAL INSTRUCTIONS

If a prepnnted label has been provided, affix it in the designated space. Review the information carefully, if any of it is incorrect, cross through it and enter the correct data in the appropriate fill-in area below. Also, if any of the prepnnted data is absent *(the area to the left of the label space lists the information that should appear)*, please provide it in the proper fill-in area(s) below. If the label is complete and correct, you need not complete Items I, III, V, and VI *(except VI-B which must be completed regardless)*. Complete all items if no label has been provided. Refer to the instructions for detailed item descriptions and for the legal authorizations under which this data is collected.

II. POLLUTANT CHARACTERISTICS

INSTRUCTIONS: Complete A through J to determine whether you need to submit any permit application forms to the EPA. If you answer "yes" to any questions, you must submit this form and the supplemental form listed in the parenthesis following the question. Mark "X" in the box in the third column if the supplemental form is attached. If you answer "no" to each question, you need not submit any of these forms. You may answer "no" if your activity is excluded from permit requirements; see Section C of the instructions. See also, Section D of the instructions for definitions of **bold-faced terms**.

SPECIFIC QUESTIONS	Mark "X" YES	NO	FORM ATTACHED	SPECIFIC QUESTIONS	Mark "X" YES	NO	FORM ATTACHED
A. Is this facility a **publicly owned treatment works** which results in a **discharge** to **waters of the U.S.**? (FORM 2A)		X		B. Does or will this facility *(either existing or proposed)* include a **concentrated animal feeding operation** or **aquatic animal production facility** which results in a **discharge** to **waters of the U.S.**? (FORM 2B)		X	
	16	17	18		19	20	21
C. Is this a facility which currently results in **discharges** to **waters of the U.S.** other than those described in A or B above? (FORM 2C)	X		X	D. Is this a proposed facility *(other than those described in A or B above)* which will result in a **discharge** to **waters of the U.S.**? (FORM 2D)		X	
	22	23	24		25	26	27
E. Does or will this facility treat, store, or dispose of **hazardous wastes**? (FORM 3)		X		F. Do you or will you inject at this facility industrial or municipal effluent below the lowermost stratum containing, within one quarter mile of the well bore, underground sources of drinking water? (FORM 4)		X	
	28	29	30		31	32	33
G. Do you or will you inject at this facility any produced water or other fluids which are brought to the surface in connection with conventional oil or natural gas production, inject fluids used for enhanced recovery of oil or natural gas, or inject fluids for storage of liquid hydrocarbons? (FORM 4)		X		H. Do you or will you inject at this facility fluids for special processes such as mining of sulfur by the Frasch process, solution mining of minerals, in situ combustion of fossil fuel, or recovery of geothermal energy? (FORM 4)		X	
	34	35	36		37	38	39
I. Is this facility a proposed **stationary source** which is one of the 28 industrial categories listed in the instructions and which will potentially emit 100 tons per year of any air pollutant regulated under the Clean Air Act and may affect or be located in an attainment area? (FORM 5)		X		J. Is this facility a proposed **stationary source** which is NOT one of the 28 industrial categories listed in the instructions and which will potentially emit 250 tons per year of any air pollutant regulated under the Clean Air Act and may affect or be located in an **attainment area**? (FORM 5)		X	
	40	41	42		43	44	45

III. NAME OF FACILITY

1 SKIP 3M Cordova

IV. FACILITY CONTACT

A. NAME & TITLE *(last, first, & title)*: 2 Smith, Aaron Environmental Engineer

B. PHONE *(area code & no.)*: (309) 654-8109

V. FACILTY MAILING ADDRESS

A. STREET OR P.O. BOX: 3 22614 Route 84 North

B. CITY OR TOWN: 4 Cordova

C. STATE: IL

D. ZIP CODE: 61242

VI. FACILITY LOCATION

A. STREET, ROUTE NO. OR OTHER SPECIFIC IDENTIFIER: 5 22614 Route 84 North

B. COUNTY NAME: Rock Island

C. CITY OR TOWN: 6 Cordova

D. STATE: IL

E. ZIP CODE: 61242

F. COUNTY CODE *(if known)*: NA

EPA Form 3510-1 (8-90)

CONTINUE ON REVERSE

CONTINUED FROM THE FRONT

VII. SIC CODES *(4-digit, in order of priority)*

A. FIRST	B. SECOND
7 *(specify)* See Attachment 1-VII for additional information	7 *(specify)*
C. THIRD	**D. FOURTH**
7 *(specify)*	7 *(specify)*

VIII. OPERATOR INFORMATION

A. NAME: 8 3M Cordova

B. Is the name listed in Item VIII-A also the owner? ☑ YES ☐ NO

C. STATUS OF OPERATOR *(Enter the appropriate letter into the answer box: if "Other," specify.)*

F = FEDERAL
S = STATE
P = PRIVATE
M = PUBLIC *(other than federal or state)*
O = OTHER *(specify)*

P *(specify)*

D. PHONE *(area code & no.)*: A (309) 654-8109

E. STREET OR P.O. BOX: 22614 Route 84 North

F. CITY OR TOWN: B Cordova

G. STATE: IL

H. ZIP CODE: 61242

IX. INDIAN LAND

Is the facility located on Indian lands? ☐ YES ☑ NO

X. EXISTING ENVIRONMENTAL PERMITS

A. NPDES *(Discharges to Surface Water)*	9 N	IL0003140	
B. UIC *(Underground Injection of Fluids)*	9 U	NA	
C. RCRA *(Hazardous Wastes)*	9 R	ILD054236443	
D. PSD *(Air Emissions from Proposed Sources)*	9 P	See Attachment 1-X.D	
E. OTHER *(specify)*	9	See Attachment 1-X.E	*(specify)*
E. OTHER *(specify)*	9		*(specify)*

XI. MAP

Attach to this application a topographic map of the area extending to at least one mile beyond property boundaries. The map must show the outline of the facility, the location of each of its existing and proposed intake and discharge structures, each of its hazardous waste treatment, storage, or disposal facilities, and each well where it injects fluids underground. Include all springs, rivers, and other surface water bodies in the map area. See instructions for precise requirements.

XII. NATURE OF BUSINESS *(provide a brief description)*

3M Cordova has two primary manufacturing factories, the Internals Factory and Electronics Factory.

The Internals Factory produces a variety of chemicals that are used by other 3M manufacturing facilities. Most of the operations in these areas are flexible batch processes that may produce a variety of products. The primary materials produced in these systems will consist largely of polymers, resins, and adhesives.

The Electronics Factory manufactures various fluorinated organic chemicals that are used as heat transfer fluids, in lubricant deposition and cleaning applications, and fire suppressants. Intermediates are produced in an Electrochemical Fluorination process and converted into final products using various batch processes. Air emissions from these processes are treated either in a process scrubber or in a high temperature combustion process. The high temperature combustion process converts fluorinated materials into an aqueous hydrofluoric acid (HF) solution product, which is sold for various industrial applications.

XIII. CERTIFICATION *(see instructions)*

I certify under penalty of law that I have personally examined and am familiar with the information submitted in this application and all attachments and that, based on my inquiry of those persons immediately responsible for obtaining the information contained in the application, I believe that the information is true, accurate, and complete. I am aware that there are significant penalties for submitting false information, including the possibility of fine and imprisonment.

A. NAME & OFFICIAL TITLE *(type or print)*	B. SIGNATURE	C. DATE SIGNED
John Portz, Vice President MRD Division		

COMMENTS FOR OFFICIAL USE ONLY

C

EPA Form 3510-1 (8-90)

3MCWA-10

CONTINUED FROM THE FRONT

VII. SIC CODES (4-digit, in order of priority)

A. FIRST	B. SECOND
7 (specify) See Attachment 1-VII for additional information	7 (specify)
C. THIRD	**D. FOURTH**
7 (specify)	7 (specify)

VIII. OPERATOR INFORMATION

A. NAME: 3M Cordova

B. Is the name listed in Item VIII-A also the owner? ☑ YES ☐ NO

C. STATUS OF OPERATOR (Enter the appropriate letter into the answer box; if "Other", specify.)
F = FEDERAL
S = STATE
P = PRIVATE
M = PUBLIC (other than federal or state)
O = OTHER (specify)

P (specify)

D. PHONE (area code & no.): A (309) 654-8109

E. STREET OR P.O. BOX: 22614 Route 84 North

F. CITY OR TOWN: Cordova

G. STATE: IL

H. ZIP CODE: 61242

IX. INDIAN LAND
Is the facility located on Indian lands? ☐ YES ☑ NO

X. EXISTING ENVIRONMENTAL PERMITS

A. NPDES (Discharges to Surface Water)	9 N	IL0003140	
B. UIC (Underground Injection of Fluids)	9 U	NA	
C. RCRA (Hazardous Wastes)	9 R	ILD054236443	
D. PSD (Air Emissions from Proposed Sources)	9 P	See Attachment 1-X.D	
E. OTHER (specify)	9	See Attachment 1-X.E	(specify)
E. OTHER (specify)	9		(specify)

XI. MAP

Attach to this application a topographic map of the area extending to at least one mile beyond property boundaries. The map must show the outline of the facility, the location of each of its existing and proposed intake and discharge structures, each of its hazardous waste treatment, storage, or disposal facilities, and each well where it injects fluids underground. Include all springs, rivers, and other surface water bodies in the map area. See instructions for precise requirements.

XII. NATURE OF BUSINESS (provide a brief description)

3M Cordova has two primary manufacturing factories, the Internals Factory and Electronics Factory.

The Internals Factory produces a variety of chemicals that are used by other 3M manufacturing facilities. Most of the operations in these areas are flexible batch processes that may produce a variety of products. The primary materials produced in these systems will consist largely of polymers, resins, and adhesives.

The Electronics Factory manufactures various fluorinated organic chemicals that are used as heat transfer fluids, in lubricant deposition and cleaning applications, and fire suppressants. Intermediates are produced in an Electrochemical Fluorination process and converted into final products using various batch processes. Air emissions from these processes are treated either in a process scrubber or in a high temperature combustion process. The high temperature combustion process converts fluorinated materials into an aqueous hydrofluoric acid (HF) solution product, which is sold for various industrial applications.

XIII. CERTIFICATION (see instructions)

I certify under penalty of law that I have personally examined and am familiar with the information submitted in this application and all attachments and that, based on my inquiry of those persons immediately responsible for obtaining the information contained in the application, I believe that the information is true, accurate, and complete. I am aware that there are significant penalties for submitting false information, including the possibility of fine and imprisonment.

A. NAME & OFFICIAL TITLE (type or print)	B. SIGNATURE	C. DATE SIGNED
Michael J. Parent, Plant Manager	[signature]	6/20/17

COMMENTS FOR OFFICIAL USE ONLY

C

EPA Form 3510-1 (8-90)

CONTINUED FROM THE FRONT

VII. BIOLOGICAL TOXICITY TESTING DATA

Do you have any knowledge or reason to believe that any biological test for acute or chronic toxicity has been made on any of your discharges or on a receiving water in relation to your discharge within the last 3 years?

☑ YES (*identify the test(s) and describe their purposes below*) ☐ NO (*go to Section VIII*)

Special condition 8 of the existing NPDES permit requires the permittee to perform acute toxicity testing on effluent from Outfall 001 semi-annually during the months of March and September. Data is submitted in an annual report due by December 31 of each year.

VIII. CONTRACT ANALYSIS INFORMATION

Were any of the analyses reported in Item V performed by a contract laboratory or consulting firm?

☑ YES (*list the name, address, and telephone number of, and pollutants analyzed by, each such laboratory or firm below*) ☐ NO (*go to Section IX*)

A. NAME	B. ADDRESS	C. TELEPHONE (*area code & no.*)	D. POLLUTANTS ANALYZED (*list*)
PDC Laboratories	2231 W. Altorfer Drive Peoria, IL 61615	(309) 683-1743	TOC, Color, Total Organic Nitrogen, Nitrate-Nitrite, Phosphorus, Cyanide, Metals (except Fe & Ni), Total Phenols, 126 Priority Pollutants
TestAmerica Laboratories, Inc.	704 Enterprise Drive Cedar Falls, IA 50613	(319) 277-2401	BOD5, Fecal Coliform, Ammonia, Sulfate, Formaldehyde
Pace Analytical Services, Inc.	1700 Elm Street SE Minneapolis, MN 55414	(612) 607-6398	Dioxin, Asbestos

IX. CERTIFICATION

I certify under penalty of law that this document and all attachments were prepared under my direction or supervision in accordance with a system designed to assure that qualified personnel properly gather and evaluate the information submitted. Based on my inquiry of the person or persons who manage the system or those persons directly responsible for gathering the information, the information submitted is, to the best of my knowledge and belief, true, accurate, and complete. I am aware that there are significant penalties for submitting false information, including the possibility of fine and imprisonment for knowing violations.

A. NAME & OFFICIAL TITLE (*type or print*)	B. PHONE NO. (*area code & no.*)
Michael J. Parent, Plant Manager	(309) 654-2291
C. SIGNATURE	D. DATE SIGNED

EPA Form 3510-2C (8-90)

Continued from the Front

IV. Narrative Description of Pollutant Sources

A. For each outfall, provide an estimate of the area (include units) of impervious surface drained by the outfall.

Outfall Number	Area of Impervious Surface (provide units)	Total Area Drained (provide units)
A (002)	7.6 acres	109.5 acres
C (003)	13.5 acres	28.0 acres
D (004)	35.0 acres	145.7 acres

Reference CORD-[illegible]-C-911 Drawing, subwatershed information

Outfall 002 data came from the subwatershed A data in the legend. Considered subwatershed A-1 to access the river through filtration and not outfall 002 discharge pipe, therefore, did not include this data in application.

Outfall 003 data came from combining subwatershed B (14.5) and C (13.5) total drainage area. Estimated 12.1 acres of impervious surface (estimated 90% impervious for subwatershed C and used 1.4 acres impervious for watershed B (same as drawing).

Outfall 004 data came from the sub-watershed data in the legend. Modified impervious surface area from 23.1 to an estimate of 35 acres.

Considered all other watersheds to reach river through filtration and not a discharge outfall.

B. Provide a narrative description of significant materials that are currently or in the past three years have been treated, stored or disposed in a manner to allow exposure to storm water; method of treatment, storage, or disposal; past and present materials management practices employed to minimize contact by these materials with storm water runoff; materials loading and access areas, and the location, manner, and frequency in which pesticides, herbicides, soil conditioners, and fertilizers are applied.

See Attachment 2F-IVB-1, Onsite Storage, Handling, and Disposal of Significant Materials at 3M Cordova

See Attachment 2F-IVB-2, Summary of Bulk Storage at 3M Cordova

C. For each outfall, provide the location and a description of existing structural and nonstructural control measures to reduce pollutants in storm water runoff; and a description of the treatment the storm water receives, including the schedule and type of maintenance for control and treatment measures and the ultimate disposal of any solid or fluid wastes other than by discharge.

Outfall Number	Treatment	List Codes from Table 2F-1
	See Attachment 2F-IVC, Description of 3M Cordova Stormwater Control Systems	

V. Nonstormwater Discharges

A. I certify under penalty of law hat the outfall(s) covered by this application have been tested or evaluated for the presence of nonstormwater discharges, and that all nonstormwater discharged from these outfall(s) are identified in either an accompanying Form 2C or From 2E application for the outfall.

Name and Official Title (*type or print*)	Signature	Date Signed
Michael J. Parent, Plant Manager	[signature]	6/30/12

B. Provide a description of the method used, the date of any testing, and the onsite drainage points that were directly observed during a test.

Field verification and review of schematic diagrams

VI. Significant Leaks or Spills

Provide existing information regarding the history of significant leaks or spills of toxic or hazardous pollutants at the facility in the last three years, including the approximate date and location of the spill or leak, and the type and amount of material released.

See Attachment 2F-VI.

Continue on Page 3

Continued from Page 2

EPA ID Number *(copy from Item 1 of Form 1)*
IL0003140

VII. Discharge Information

A, B, C, & D: See instructions before proceeding. Complete one set of tables for each outfall. Annotate the outfall number in the space provided.
Table VII-A, VII-B, VII-C are included on separate sheets numbers VII-1 and VII-2.

E. Potential discharges not covered by analysis – is any toxic pollutant listed in table 2F-2, 2F-3, or 2F-4, a substance or a component of a substance which you currently use or manufacture as an intermediate or final product or byproduct?

☑ Yes (*list all such pollutants below*) ☐ No (*go to Section IX*)

See Attachment 2F-VIIE, Potential Discharges Not Covered By Analysis

Note:
Methyl mercaptan is present as an impurity at a concentration of 0.05% in a raw material used at 3M Cordova. 3M Cordova was unable to find a laboratory with the capability of analyzing for methyl mercaptan after an extensive search of analytical laboratories. Because of this reason, the extremely low concentration in the raw material, and the unlikely means for it to be discharged through a stormwater outfall, methyl mercaptan was not analyzed. All other highlighted compounds were tested for in the stormwater discharges for Outfalls 002-004.

VIII. Biological Toxicity Testing Data

Do you have any knowledge or reason to believe that any biological test for acute or chronic toxicity has been made on any of your discharges or on a receiving water in relation to your discharge within the last 3 years?

☐ Yes (*list all such pollutants below*) ☑ No (*go to Section IX*)

IX. Contract Analysis Information

Were any of the analyses reported in Item VII performed by a contract laboratory or consulting firm?

☑ Yes (*list the name, address, and telephone number of, and pollutants analyzed by, each such laboratory or firm below*) ☐ No (*go to Section X*)

A. Name	B. Address	C. Area Code & Phone No.	D. Pollutants Analyzed
PDC Laboratories	2231 W. Altorfer Drive Peoria, IL 61615	(309) 683-1743	TOC, Color, TN, TP, Nitrate-Nitrite, Cyanide, Metals (except Fe & Ni), Total Phenols, 126 PP
TestAmerica Laboratories, Inc.	704 Enterprise Drive Cedar Falls, IA 50613	(319) 277-2401	BOD5, FC, Ammonia, Sulfate, Formaldehyde
Pace Analytical Services, Inc.	1700 Elm Street SE Minneapolis, MN 55414	(612) 607-6398	Asbestos, Dioxin, Butyl acetate, Diethyl amine, Epichlorohydrin, Quinoline, Vanadium

X. Certification

I certify under penalty of law that this document and all attachments were prepared under my direction or supervision in accordance with a system designed to assure that qualified personnel properly gather and evaluate the information submitted. Based on my inquiry of the person or persons who manage the system or those persons directly responsible for gathering the information, the information submitted is, to the best of my knowledge and belief, true, accurate, and complete. I am aware that there are significant penalties for submitting false information, including the possibility of fine and imprisonment for knowing violations.

A. Name & Official Title (*Type Or Print*)	B. Area Code and Phone No.
Michael J. Parent, Plant Manager	(309) 654-2291
C. Signature	D. Date Signed

EPA Form 3510-2F (1-92)

Attachment 1–VII

3M Cordova Supplemental SIC Code Information

North American Standard Industrial Classification Codes

Standard Industrial Classification (SIC) Codes are no longer used to report manufacturing information to the U.S. Census Bureau. This information is currently being reported using the North American Industrial Classification System (NAICS). Data for these reports is developed by 3M's accounting organizations and these determinations may be based on a variety of factors. Provided below is a summary of major NAICS listings for the plant site for the year 2017.

325998	All Other Misc. Chemical Product and Preparation Manufacturing
325211	Plastics Material and Resin Manufacturing
325130	Synthetic Dye and Pigment Manufacturing
325120	Industrial Gas Manufacturing
325510	Paint and Coating Manufacturing
325199	All Other Basic Organic Chemical Manufacturing

Attachment 1–X.D

3M Cordova Air Permits

Permit Number	Permit Name	Classification
96030133	CAAPP Permit	Operating (Title I and Title V)
09110026	Atomizer Installation	Construction
10080057	System 30-05	Construction
16080028	Thermal Oxidizer Water Atomizer	Construction
17040029	OCA Project	Construction
B1608264	Open Burn – Fire Training	Other
B1608265	Prairie Burn Ecological Management	Other

Attachment 1–X.E

3M Cordova Other Environmental Permits

Permit Number	Permit Name	Classification
IL3049031	Non-Transient, Non-Community Public Water Supplies	Drinking Water
161-22-2014	Replacement Well 113	Construction
161-39-2013	Replace Well 12	Construction
161-70-2014	Replace Well 13	Construction
161-83-2012	CS-16 Well Installation	Construction
Replacement Well 112	Replacement Well 112	Construction
2012-EN-0005	Fluoride Treatment System Upgrade	Operating
2012-EN-0614	Treatment System – Salt	Operating
3094469357-1	Well 12 Sealing Permit	Other
3094469357-2	Well 13 Sealing Permit	Other

Attachment 1–XI

3M Cordova Site and Topographical Maps

(Includes reference maps for Form 2F, section III)

Reference Maps Attached with Permit Application:

Cordova Plot Plan (7-18-05)
Most recent site layout detailing general facility layout.
Size: 8.5 x 11 (with attachment 1-X1)

CORD-888-C-001, Property Plot Plan
Property layout showing facility, property line and easement information.
Size: 21.5 x 32 (attachment at the end of the application)

CORD-888-C-911, Main Plant Area – Site Drainage Area Map A
Watershed information for the main plant site.
Size: 21.5 x 32 (attachment at the end of the application)

CORD-888-C-915, Main Plant Area – Site Drainage Area Map B
Watershed information for the main plant site.
Size: 21.5 x 32 (attachment at the end of the application)

CORD-888-C-916, Well Field Area – Site Drainage Map
Watershed information for the well field area.
Size: 21.5 x 32 (attachment at the end of the application)

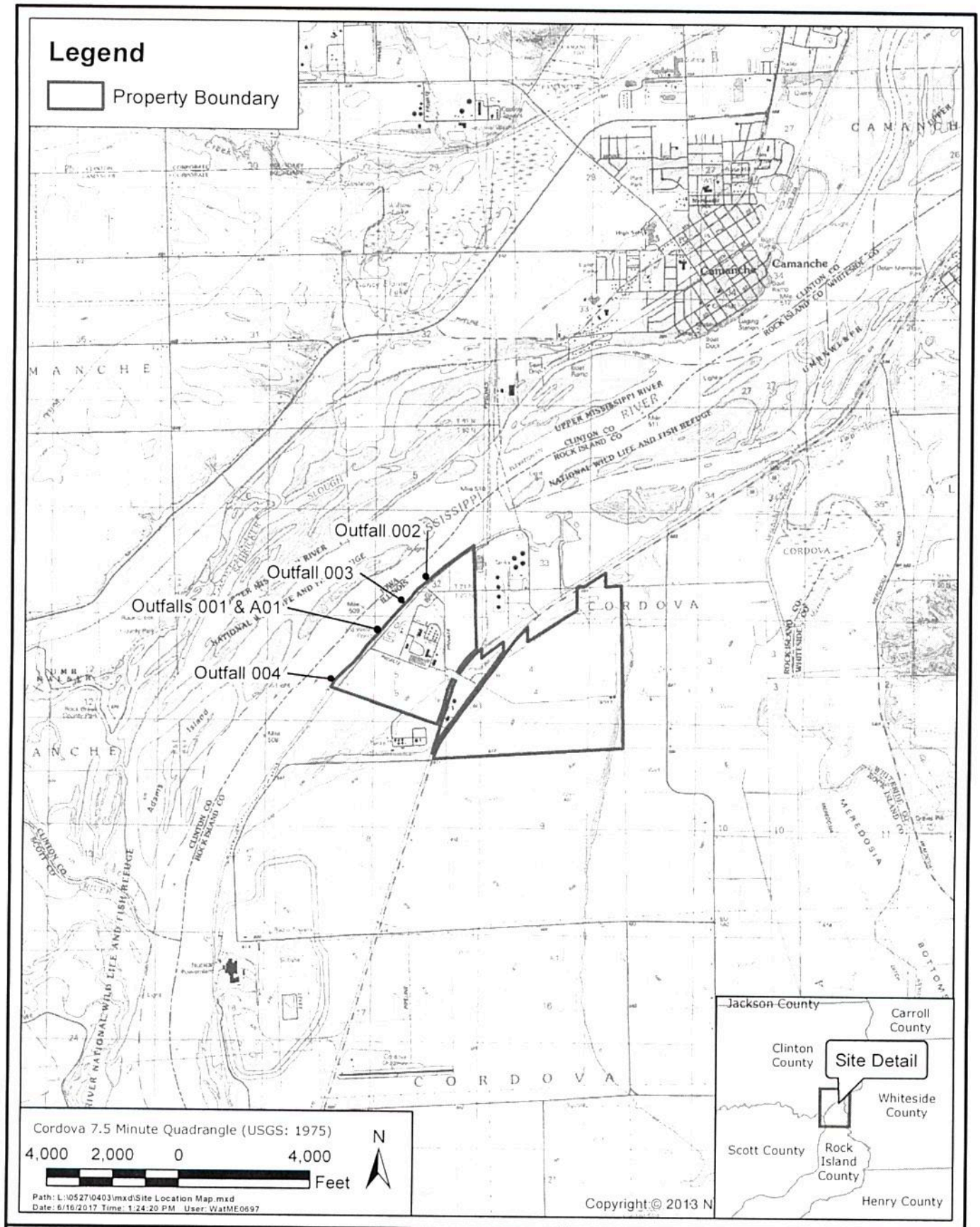

3M CORDOVA	WENCK	JUN 2017
Facility Location Map	Responsive partner. Exceptional outcomes.	Att. 1-XI

EPA I.D. NUMBER (*copy from Item 1 of Form 1*)
ILD054236443

Form Approved.
OMB No. 2040-0086.
Approval expires 3-31-98.

Please print or type in the unshaded areas only.

FORM **2C** NPDES

EPA

U.S. ENVIRONMENTAL PROTECTION AGENCY
APPLICATION FOR PERMIT TO DISCHARGE WASTEWATER
EXISTING MANUFACTURING, COMMERCIAL, MINING AND SILVICULTURE OPERATIONS
Consolidated Permits Program

I. OUTFALL LOCATION

For each outfall, list the latitude and longitude of its location to the nearest 15 seconds and the name of the receiving water.

A. OUTFALL NUMBER (*list*)	B. LATITUDE			C. LONGITUDE			D. RECEIVING WATER (*name*)
	1. DEG.	2. MIN.	3. SEC.	1. DEG.	2. MIN.	3. SEC.	
001	41.00	45.00	17.00	90.00	17.00	34.00	Mississippi River
A01	41.00	45.00	17.00	90.00	17.00	33.00	Internal discharge point - final
							polishing pond mixes with NCCW.

II. FLOWS, SOURCES OF POLLUTION, AND TREATMENT TECHNOLOGIES

A. Attach a line drawing showing the water flow through the facility. Indicate sources of intake water, operations contributing wastewater to the effluent, and treatment units labeled to correspond to the more detailed descriptions in Item B. Construct a water balance on the line drawing by showing average flows between intakes, operations, treatment units, and outfalls. If a water balance cannot be determined (*e.g., for certain mining activities*), provide a pictorial description of the nature and amount of any sources of water and any collection or treatment measures.

B. For each outfall, provide a description of: (1) All operations contributing wastewater to the effluent, including process wastewater, sanitary wastewater, cooling water, and storm water runoff; (2) The average flow contributed by each operation; and (3) The treatment received by the wastewater. Continue on additional sheets if necessary.

1. OUTFALL NO. (*list*)	2. OPERATION(S) CONTRIBUTING FLOW		3. TREATMENT		
	a. OPERATION (*list*)	b. AVERAGE FLOW (*include units*)	a. DESCRIPTION	b. LIST CODES FROM TABLE 2C-1	
001	Non-Contact Cooling Water	7.3 MGD + stormwater	No treatment	4-A	XX
	Treated Wastewater from Outfall A01	0.8 MGD + stormwater	Nickel-Fluoride Pretreatment(1) & Organic Treatment (2)	4-A	XX
A01	Boiler Blowdown	0.12 MGD	Flows to Organic Treatment (2)	XX	XX
	Sanitary Wastewater	0.02 MGD	Flows to Organic Treatment (2)	XX	XX
	Organics Manufacturing Process Wastewater	0.30 MGD	Flows to Organic Treatment (2)	XX	XX
	Fluorochemical Manufacturing Process Wastewater	0.36 MGD	Flows to Nickel-Fluoride Pretreatment(1), then Organic Treatment (2)	XX	XX
	(1) Nickel-Fluoride Treatment System Operation described in attachment 2C-IIB-1	0.36 MGD + stormwater	Distillation/Evaporation	1-D	1-F
			Equalization	XX	XX
			Neutralization	2-K	XX
			Chemical Precipitation	2-C	XX
			Coagulation/Flocculation	2-D	1-G
			Sedimentation	1-U	XX
	(2) Organic Treatment System Operation described in attachment 2C-IIB-2 Polishing Ponds operation described in Attachment 2-C-IIB-4	0.8 MGD + stormwater	Primary Sedimentation/Scum & Sludge Incineration	1-U	5-O
			Equalization	XX	XX
			Activated Sludge	3-A	XX
			Secondary Sedimentation	1-U	XX
			Polishing Ponds/Stabilization Ponds	1-U	3-G
			Aerobic Digester	5-A	XX
	NOT CURRENTLY IN SERVICE: (3) Inorganic Treatment System Operation described in attachment 2C-IIB-3	Stormwater only at this time	Equalization	XX	XX
			Neutralization	2-K	XX
			Aeration (formerly iron oxidation)	XX	XX
			Coagulation/Flocculation	2-D	1-G
			Sedimentation	1-U	XX
	(4) Sludge Dewatering		Belt Filtration/Landfill	5-C	5-Q

OFFICIAL USE ONLY (*effluent guidelines sub-categories*)

CONTINUED FROM THE FRONT

C. Except for storm runoff, leaks, or spills, are any of the discharges described in Items II-A or B intermittent or seasonal?

☐ YES (*complete the following table*) ☑ NO (*go to Section III*)

1. OUTFALL NUMBER (*list*)	2. OPERATION(s) CONTRIBUTING FLOW (*list*)	3. FREQUENCY		4. FLOW				
		a. DAYS PER WEEK (*specify average*)	b. MONTHS PER YEAR (*specify average*)	a. FLOW RATE (*in mgd*)		B. TOTAL VOLUME (*specify with units*)		C. DURATION (*in days*)
				1. LONG TERM AVERAGE	2. MAXIMUM DAILY	1. LONG TERM AVERAGE	2. MAXIMUM DAILY	
NA	NA	NA	NA	NA	NA	NA	NA	NA

III. PRODUCTION

A. Does an effluent guideline limitation promulgated by EPA under Section 304 of the Clean Water Act apply to your facility?

☐ YES (*complete Item III-B*) ☑ NO (*go to Section IV*)

B. Are the limitations in the applicable effluent guideline expressed in terms of production (*or other measure of operation*)?

☐ YES (*complete Item III-C*) ☑ NO (*go to Section IV*)

C. If you answered "yes" to Item III-B, list the quantity which represents an actual measurement of your level of production, expressed in the terms and units used in the applicable effluent guideline, and indicate the affected outfalls.

1. AVERAGE DAILY PRODUCTION			2. AFFECTED OUTFALLS (*list outfall numbers*)
a. QUANTITY PER DAY	b. UNITS OF MEASURE	c. OPERATION, PRODUCT, MATERIAL, ETC. (*specify*)	

See Attachment 2C-IIIC - Applicability of Federal Effluent Guidelines and Standards to the 3M Cordova NPDES discharge.

IV. IMPROVEMENTS

A. Are you now required by any Federal, State or local authority to meet any implementation schedule for the construction, upgrading or operations of wastewater treatment equipment or practices or any other environmental programs which may affect the discharges described in this application? This includes, but is not limited to, permit conditions, administrative or enforcement orders, enforcement compliance schedule letters, stipulations, court orders, and grant or loan conditions.

☐ YES (*complete the following table*) ☑ NO (*go to Item IV-B*)

1. IDENTIFICATION OF CONDITION, AGREEMENT, ETC.	2. AFFECTED OUTFALLS		3. BRIEF DESCRIPTION OF PROJECT	4. FINAL COMPLIANCE DATE	
	a. NO.	b. SOURCE OF DISCHARGE		a. REQUIRED	b. PROJECTED
NA	NA	NA	NA	NA	NA

B. OPTIONAL: You may attach additional sheets describing any additional water pollution control programs (*or other environmental projects which may affect your discharges*) you now have underway or which you plan. Indicate whether each program is now underway or planned, and indicate your actual or planned schedules for construction.

☐ MARK "X" IF DESCRIPTION OF ADDITIONAL CONTROL PROGRAMS IS ATTACHED

CONTINUE ON PAGE 3

EPA I.D. NUMBER (*copy from Item I of Form 1*)

ILD054236443

CONTINUED FROM PAGE 2

V. INTAKE AND EFFLUENT CHARACTERISTICS

A, B, & C: See instructions before proceeding – Complete one set of tables for each outfall – Annotate the outfall number in the space provided.
NOTE: Tables V-A, V-B, and V-C are included on separate sheets numbered V-1 through V-9.

D. Use the space below to list any of the pollutants listed in Table 2c-3 of the instructions, which you know or have reason to believe is discharged or may be discharged from any outfall. For every pollutant you list, briefly describe the reasons you believe it to be present and report any analytical data in your possession.

1. POLLUTANT	2. SOURCE	1. POLLUTANT	2. SOURCE
See Attachment 2C-VD - Table 2C-3 Pollutants with Potential to Discharge from 3M Cordova Outfalls			

VI. POTENTIAL DISCHARGES NOT COVERED BY ANALYSIS

Is any pollutant listed in Item V-C a substance or a component of a substance which you currently use or manufacture as an intermediate or final product or byproduct?

☑ YES (*list all such pollutants below*) ☐ NO (*go to Item VI-B*)

Refer to Section V-C. All Pollutants checked in column 2.b. (Believed Present) are currently either used or manufactured as an intermediate or final product or byproduct.

CONTINUED FROM THE FRONT

VII. BIOLOGICAL TOXICITY TESTING DATA

Do you have any knowledge or reason to believe that any biological test for acute or chronic toxicity has been made on any of your discharges or on a receiving water in relation to your discharge within the last 3 years?

☑ YES (*identify the test(s) and describe their purposes below*) ☐ NO (*go to Section VIII*)

Special condition 8 of the existing NPDES permit requires the permittee to perform acute toxicity testing on effluent from Outfall 001 semi-annually during the months of March and September. Data is submitted in an annual report due by December 31 of each year.

VIII. CONTRACT ANALYSIS INFORMATION

Were any of the analyses reported in Item V performed by a contract laboratory or consulting firm?

☑ YES (*list the name, address, and telephone number of, and pollutants analyzed by, each such laboratory or firm below*) ☐ NO (*go to Section IX*)

A. NAME	B. ADDRESS	C. TELEPHONE (*area code & no.*)	D. POLLUTANTS ANALYZED (*list*)
PDC Laboratories	2231 W. Altorfer Drive Peoria, IL 61615	(309) 683-1743	TOC, Color, Total Organic Nitrogen, Nitrate-Nitrite, Phosphorus, Cyanide, Metals (except Fe & Ni), Total Phenols, 126 Priority Pollutants
TestAmerica Laboratories, Inc.	704 Enterprise Drive Cedar Falls, IA 50613	(319) 277-2401	BOD5, Fecal Coliform, Ammonia, Sulfate, Formaldehyde
Pace Analytical Services, Inc.	1700 Elm Street SE Minneapolis, MN 55414	(612) 607-6398	Dioxin, Asbestos

IX. CERTIFICATION

I certify under penalty of law that this document and all attachments were prepared under my direction or supervision in accordance with a system designed to assure that qualified personnel properly gather and evaluate the information submitted. Based on my inquiry of the person or persons who manage the system or those persons directly responsible for gathering the information, the information submitted is, to the best of my knowledge and belief, true, accurate, and complete. I am aware that there are significant penalties for submitting false information, including the possibility of fine and imprisonment for knowing violations.

A. NAME & OFFICIAL TITLE (*type or print*)	B. PHONE NO. (*area code & no.*)
John Portz, Vice President MRD Division	(651) 575-1362
C. SIGNATURE	D. DATE SIGNED

EPA Form 3510-2C (8-90)

PLEASE PRINT OR TYPE IN THE UNSHADED AREAS ONLY. You may report some or all of this information on separate sheets (*use the same format*) instead of completing these pages.
SEE INSTRUCTIONS.

EPA I.D. NUMBER (*copy from Item 1 of Form 1*)
ILD054236443

OUTFALL NO.

V. INTAKE AND EFFLUENT CHARACTERISTICS *(continued from page 3 of Form 2-C)*

PART A –You must provide the results of at least one analysis for every pollutant in this table. Complete one table for each outfall. See instructions for additional details.

1. POLLUTANT	2. EFFLUENT							3. UNITS (*specify if blank*)		4. INTAKE (*optional*)		
	a. MAXIMUM DAILY VALUE		b. MAXIMUM 30 DAY VALUE (*if available*)		c. LONG TERM AVRG. VALUE (*if available*)		d. NO. OF ANALYSES	a. CONCEN-TRATION	b. MASS	a. LONG TERM AVERAGE VALUE		b. NO. OF ANALYSES
	(1) CONCENTRATION	(2) MASS	(1) CONCENTRATION	(2) MASS	(1) CONCENTRATION	(2) MASS				(1) CONCENTRATION	(2) MASS	

See Attachments 2C-V - Outfall 001 and 2C-V Outfall A01 for sampling data

CONTINUE ON REVERSE

Attachment 2C-IIA
3M Cordova Manufacturing Facilities
Schematic of Water and Wastewater Flows

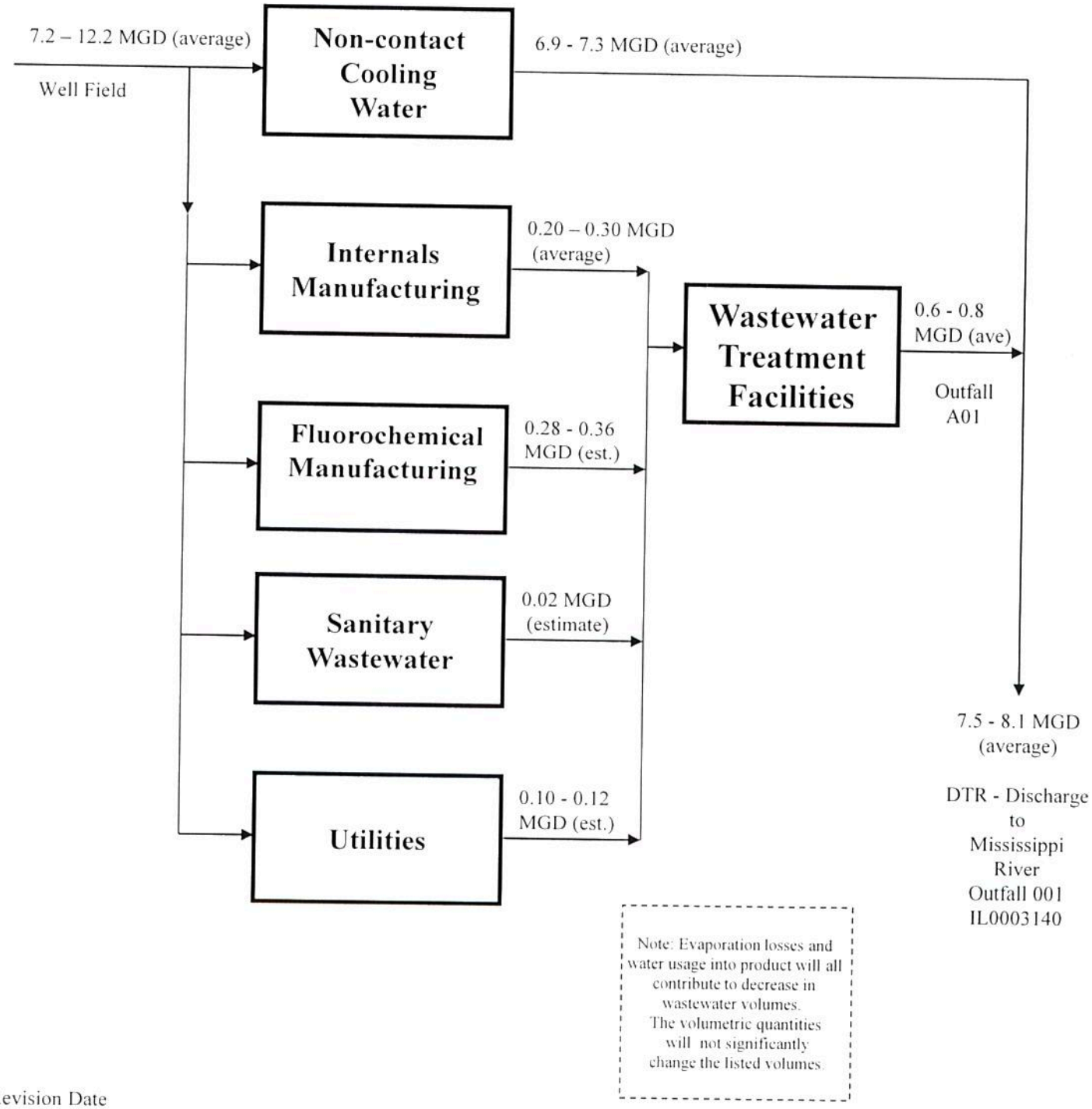

Revision Date
05/30/2017

Attachment 2C-IIB

3M Cordova Manufacturing Facilities

Schematic of Wastewater Treatment Facilities

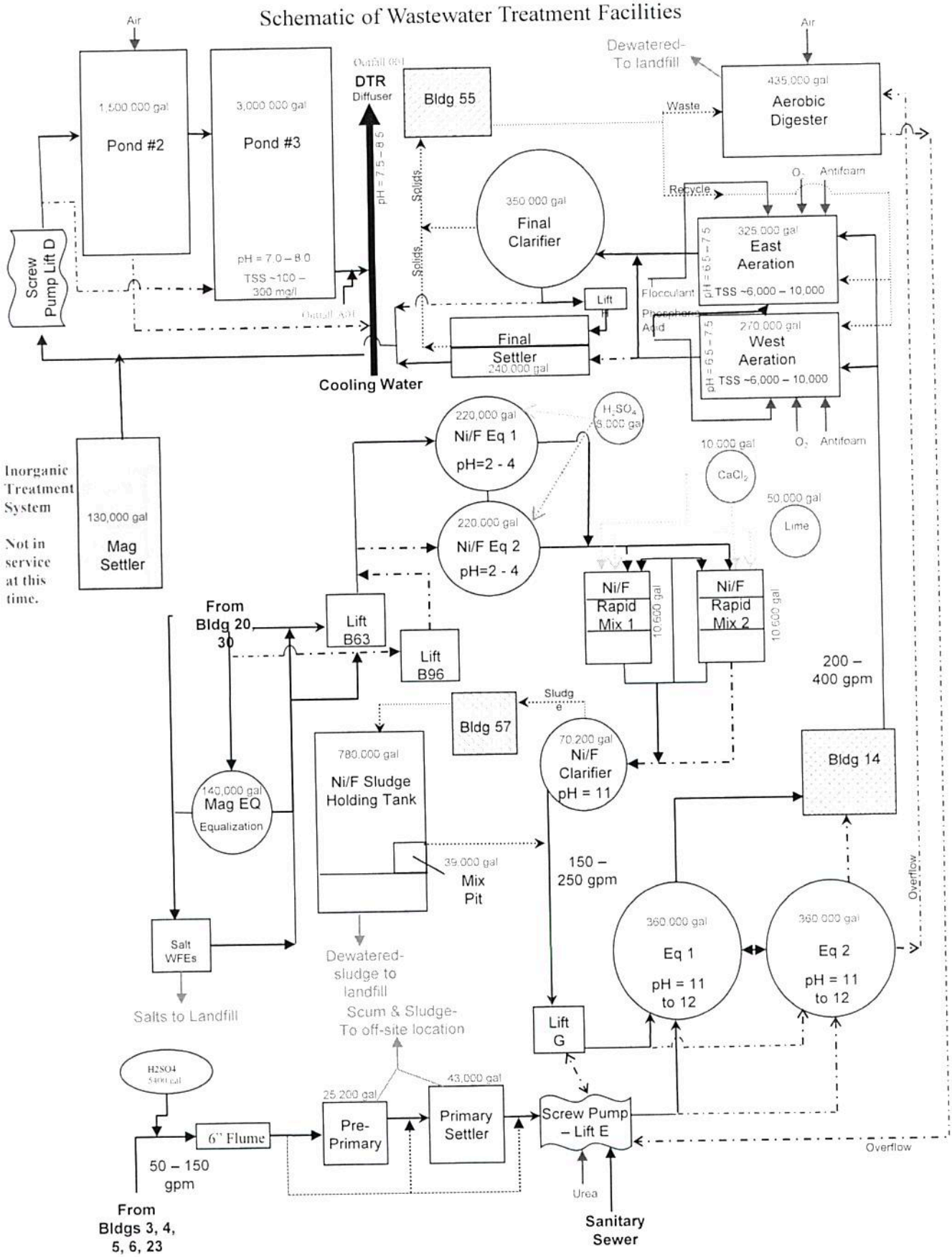

ATTACHMENT 2C-IIB
3M CORDOVA
WASTEWATER TREATMENT SYSTEM DESCRIPTION

General Facility Description

The Cordova facility has two primary manufacturing factories, the Internals Factory and Electronics Factory. The Internals Factory produces a variety of chemicals that are used by other 3M manufacturing facilities. Most of the operations in these areas are flexible batch processes that may produce a variety of products. The primary materials produced in these systems will consist largely of polymers, resins, and adhesives. Wastewaters generated from these operations most typically contain various dissolved organic solvents, monomers, solids residuals from polymer making operations, and dilute basic/acid solution from various cleaning and purification operations. These wastewaters are discharged to the internal chemical sewer system for treatment at the on-site WWTP. The Cordova site has a centralized utility operation that also discharges wastewaters to the WWTP for treatment.

The Electronics Factory manufactures various fluorinated organic chemicals that are used as heat transfer fluids, in lubricant deposition and cleaning applications, and fire suppressants. Intermediates are produced in an Electrochemical Fluorination process and converted into final products using various batch processes. Wastewaters will contain various dissolved organic materials. Acids and bases are also in the final work-up steps for purification and cleaning operations. Waste streams from these processes are discharged to the chemical sewer system and treated at the WWTP. Air emissions from these processes are treated in a high temperature combustion process, which converts fluorinated materials into an aqueous hydrofluoric acid (HF) solution product, which is sold for various industrial applications. The exhaust from this process is further treated in a scrubber to remove residual fluoride and sulfur compounds. The scrubber effluent and potentially the aqueous HF by-product are then discharged to the onsite WWTP for treatment.

Wastewater Treatment Plant Description

Fluoride Treatment System

Wastewaters from the Electronics Factory are first treated in a physical-chemical treatment system. The specific unit processes include equalization, a rapid mix system for chemical addition and flocculation, a sedimentation tank, sludge holding tank, and dewatering operations. The primary purpose of these wastewater treatment facilities is to precipitate fluoride that is contained in these wastewaters. Lime and calcium chloride are added to produce insoluble calcium fluoride (CaF_2). Sulfuric acid may be added to the equalization tank in order to lower pH to ensure sufficient quantities of dissolved calcium are present. Wastewaters from the Electronics Factory will contain a number of anions that will also precipitation as calcium salts. Sulfuric acid is used in several factory processes and also in wastewater treatment. The thermal oxidizer that is used to treat vent process air emissions will produce some sulfur dioxide that is removed in a scrubber and converted to sodium sulfate/sulfite salts. Lesser amounts of carbonate salts may also be present.

Flocculants are added to aid in the sedimentation of these precipitated materials, which are removed from the clarifier, dewatered, and transported off-site for disposal. The fluoride removal efficiency of the system is primarily dependent on the inlet fluoride concentration since effluent concentration will be relatively stable, being based by CaF_2 solubility and the other anions present. Historically, removal efficiencies have ranged between 90 to greater than 99.9%. As a result of recent site improvements, the fluoride inlet concentration has been reduced by approximately 80%. The overall removal efficiency now averages approximately 84% but effluent quality has remained the same or better.

Lesser amounts of nickel may also be present in these wastewaters. The pH ranges that are produced during the addition of lime for fluoride removal will result in the minimal solubility nickel hydroxide, which is also removed in this system.

Biological Treatment System

The Internals Factory produces a variety of resin and adhesive products, and the wastewaters from these facilities contain latex type emulsions and solids that are generated during reactor cleaning. These wastewaters are first treated in a two-step "primary" treatment facility, which removes solids through both settled sludge and scum. These materials are sent off-site for disposal. Effluent from the Fluoride Treatment System is combined with effluent from the primary treated Internals Factory wastewater and collected in two equalization tanks. The purpose of the equalization tanks is to normalize the flow and organic loading to the biological treatment system. The equalization tanks provide one to two days of equalization capacity depending upon flow volumes. The activated sludge system consists of aeration, secondary clarification, and tertiary polishing.

Pure oxygen injection systems are utilized to provide oxygen required for biological degradation. While these systems are more expensive and have higher operating costs than conventional diffused aeration systems, the use of pure oxygen provides for a rapid response in the fluctuations in organic loading and flow from the facility since there are no limitations in the amount of oxygen that can added for bio-oxidation. The wastewaters discharged from factory operations are nutrient deficient, and both phosphoric acid and urea are added continuously to the activated sludge system.

Two activated sludge tanks operate in parallel. Sludge sedimentation has been accomplished in two separate systems, including an older pair of rectangular clarifiers and a new circular clarifier added to the plant with the construction of the second activated sludge aeration tank in the late 90s (1997/1998). Each of the two activated sludge/settling system operates parallel and independently. The circular clarifier has an individual capacity that far exceeds the total system needs, and one of the improvements described later in this report was modifying the clarification system to provide series rather than parallel operations.

ATTACHMENT 2C-IIB
3M CORDOVA
WASTEWATER TREATMENT SYSTEM DESCRIPTION

Treated wastewater from the activated sludge system is discharged into two polishing ponds. The ponds operate in series with the effluent (Outfall A01) being combined with non-contact cooling water prior to discharge to the river through Outfall 001.

The polishing ponds have historically been used to remove residual suspended solids. During 2011, the average influent and effluent concentrations for the polishing ponds were 80 and 16 mg/L, respectively. These ponds have played a key role meeting the existing NPDES Total Suspended Solids (TSS) permit limits. A negative aspect of this process is the accumulation of these solids (estimated to be approximately 100,000 pounds in 2011) in pond sediments. Anaerobic decomposition of these solids and release of soluble by-products/intermediates is possible, which can contribute to unpredictable measurement of biochemical oxygen demand (BOD5) in the effluent.

ATTACHMENT 2C-IIB-1
3M CORDOVA
NICKEL-FLUORIDE TREATMENT SYSTEM DETAILS

The following is a summary of the sizes, volumes, capabilities, etc., of the treatment units that are provided in the nickel fluoride inorganic treatment system:

1. Electronic Data Logging and Trend Analysis System

    a. Type: ProVox

    b. Parameters:

        (1) pH in equalization tanks

        (2) Flow from equalization tanks

        (3) Water level in equalization tanks

        (4) pH in rapid mix tanks

        (5) Lime tank level

        (6) Lime usage rate

        (7) Calcium chloride tank level

        (8) Calcium chloride usage rate

2. Lift Pumps to Equalization Tanks

    a. Number of pumps: 2

    b. Capacity: 400 gpm (each)

3. Equalization Tanks

    a. Number of tanks: 2

    b. Dimensions: 30 ft X 30 ft X 19 Ft

    c. Water Depth: 16 ft

    d. Capacity: 107,000 gallons (each)

4. Fluoride Chemical Precipitation Equipment

   a. One 8000 sulfuric acid storage tank

   b. One 50,000-gallon lime slurry storage tank

   c. One 10,000-gallon calcium chloride tank

   d. One lime slurry feed control valve

   e. One sulfuric acid feed control valve

   f. Two rapid mix tanks

      (1) Dimensions: 8 ft X 8 ft X 14 ft deep

      (2) Water depth: 11 ft

      (3) Liquid working volume: 3900 gallons

      (4) Mixer: one vertical shaft agitator

   g. Two flocculation tanks

      (1) Dimensions: 8 ft X 14 ft X 14 ft deep

      (2) Water depth: 11 ft

      (3) Liquid working volume: 6700 gallons

      (4) Mixer: Two vertical shaft agitators

5. Nickel Fluoride Settling Tank

   a. Number of tanks: 1 circular

   b. Dimensions: 35 feet diameter

   c. Water depth: 13 ft

   d. Volume: 70,200 gallons

   e. Surface area: 961 SF

6. Sludge Holding Tank

    a. Number of tanks: 1

    a. Dimensions: 58 ft X 130 ft 16

    b. Working depth: 12.8 ft

    c. Volume: 680,000 gallons

7. Sludge Mix Tank

    a. Number of tanks: 1

    b. Dimensions: 20 X 20 X 16

    c. Working depth: 13 ft

    d. Volume: 39,000 gallons

    e. Vertical shaft mixer

8. Lift Pumps to Organic Equalization Tanks (primary)

    a. Number of pumps: 2

    b. Capacity: 400 gpm (each)

9. Screw Lift Pumps to Organic Equalization Tanks (back up)

    a. Number of pumps: 2

    b. Capacity: 750 gpm each

ATTACHMENT 2C-IIB-2
3M CORDOVA
ORGANIC (BIOLOGICAL) TREATMENT SYSTEM DETAILS

The following is a summary of the sizes, volumes, capabilities, etc., of the treatment units that are provided in the organic (biological) treatment system:

1. Electronic Data Logging and Trend Analysis System

    a. Type: ProVox

    b. Parameters:

        (1) influent flow (from Parshall flume)

        (2) influent pH (in primary settling tank)

        (3) pH in equalization tanks

        (4) water level in equalization tanks

        (5) flow rate from equalization tanks into aeration tank

        (6) dissolved oxygen in aeration tank

        (7) pH in aeration tank

        (8) water temperature in aeration tank

        (9) oxygen supply flow rate to liquid oxygen units in the aeration tanks

        (10) activated sludge recycle flow rate

2. Primary Settling: 2 tanks (operated in series)

	Tank 1	Tank 2
Dimensions (ft)	30 X 16 X 10	40.5 X 16 X 12
Water Depth (ft)	7	9
Liquid Volume (gallon)	18850	46,623
Surface Area (SF)	480	648

3. Screw Lift. Pumps to Equalization Tanks

    a. Number of pumps: 2

    b. Capacity: 500 gpm (each)

ATTACHMENT 2C-IIB-2
3M CORDOVA
ORGANIC (BIOLOGICAL) TREATMENT SYSTEM DETAILS

4. Equalization

   a. Design: above ground with leak collection system

   b. Number of tanks: 2

   c. Dimensions: 84 ft diameter and 14 ft deep

   d. Water depth: 9 ft

   e. Liquid working volume: 374,000 gallons (439,000 gallons before overflow)

   f. Mixing: two side mixers in each tank, 7.5 HP each mixer

5. Neutralization

   a. Sulfuric acid feed available from nickel fluoride or inorganic treatment tanks

   b. Caustic and sulfuric acid feed on demand from manufacturing process area fed into chemical sewer

6. Aeration: 2 tanks

	Tank 1	Tank 2
Dimensions (ft)	100.6 X 24 X 18	100 X 29 X 16
Water Depth (ft)	15	13.8
Liquid Volume (gallon)	270000	300000

7. Final Clarification: 3 tanks (operated in series)

	Tank 1	Tank 2	Tank 3
Type	Rectangular	Rectangular	Circular
Dimensions (ft)	88 X 20 X 12	88 X 20 X 12	Diameter: 75
Water Depth (ft)	9	9	13.5
Liquid Volume (gallon)	119,000	119,000	445,000
Surface Area (SF)	1760	1760	4415

8. Aerobic Digester Basin for Waste Activated Sludge (biosolids)

   a. Number of basins: 1

   b. Dimensions: 108 ft X 74 ft bottom: 55 ft X 55 ft depth: 14 ft

   c. Water depth: 11 ft 6 in

d. Volume: 437,500 gal

e. Lining: concrete

9. Air Blowers for Aerobic Digester

No. of blowers	2
Capacity	4000 CFM @ 7.5 psi
HP	150 each

10. Pure Oxygen Supply for Aeration Tanks (4 units, 2 per aeration tank)

a. Oxygen injection I-SO units (4): 35 HP

b. Liquid Oxygen storage
tank Capacity –
1,226,444 cf

11. Nutrient Feed System

.a. Phosphorous: 4,000-gallon phosphoric acid storage tank with chemical feed pump

b. Nitrogen: Dry urea when nitrogen content of wastewater is insufficient

12. Defoaming System for Aeration Tank

a. Storage: 3,200 gallon feed tank located in Bldg. 55

b. Feed system: Variable speed, variable stroke, 60 gpd chemical feed pumps

13. Coagulant Feed for Final Clarifiers

a. Coagulant: organic wastewater treatment polymer

b. Storage: 3,200-gallon tank located in Bldg. 51

c. Feed System: variable speed, variable stroke, 60 gpd chemical feed pump

14. Discharge into two polishing ponds

ATTACHMENT 2C-IIB-3
3M CORDOVA
INORGANIC TREATMENT SYSTEM DETAILS

The following is a summary of the sizes, volumes, capabilities, etc., of the treatment units that are provided in the inorganic treatment system:

Note: treatment system is currently out of service except as noted below and primarily processes stormwater flow from building roof drains and secondary containment systems at this time.

1. Electronic Data Logging and Trend Analysis System

    a. Type: ProVox

    b. Parameters:

        (1). pH of influent from iron oxide plant

        (2). Flow of influent from iron oxide plant

        (Parshall flume) (3). pH in equalization tank

        (4). Water level in equalization tank

        (5). Flow from equalization tank into the aeration tank

        (6) pH in aeration tank

2. Fluoride Chemical Precipitation (Old Fluoride Chemical Precipitation for Building 20 Wastewater)

    System description: This is the treatment system that was utilized for fluoride control prior to the construction of the Nickel-Fluoride Treatment System (See Attachment D2). It may be used intermittently for back-up treatment or to treat spills from the hydrofluoric acid unloading station.

    a. One 20,000-gallon lime slurry storage tank
    Note: This tank is still utilized for storage of lime slurry.

    b. One lime slurry feed control valve and timer

    c. One chemical precipitation tank

        (1) Dimensions: 12 ft X 12 ft X 15 ft 6 in deep

        (2) Water depth: 6 ft

        (3) Liquid working volume: 1,300 ft3 (9,720 gallons)

        (4) Mixer: one vertical shaft, 25 HP agitator

3. Wet Wells

a. Wet Well #1

(1) Dimensions: 7 ft X 10ft X 16 ft

(2) Water depth: 8 ft 5 in

(3) Working-volume: 589 ft3 (4,400 gallons)

b. Wet Well #2

(a) Dimensions: 14 ft X 14 ft X 17 ft

(b) Water depth: 9 ft 6 in

(c) Working volume: 1862 ft3 (13,965 gallons)

4. pH adjustment ($8.0 \leq pH \leq 8.4$ for iron removal)

a. Reagents: sodium hydroxide and sulfuric acid as needed

5. Equalization

a. above ground

b. Number of tanks: 1

c. Dimensions: 40 ft diameter and 16 ft high

d. Water depth: 14 ft 11 in

e. Liquid volume: 18,667 ft3 (140, 000 gal)

f. Mixing: 25 HP vertical shaft mixer

6. Iron Oxidation Aeration Tank

a. Number of tanks: 1

b. Dimensions: 20 ft long. X 8 ft. wide X 11 ft 6. in deep

c. Water depth-: 8 ft 5 in

d. Liquid volume: 1,347 ft3 (10,000 gallons)

e. Number of diffusers: 140

f. Air blower: one 75-HP centrifugal blower

7. Flocculation Tank

a. Number of tanks: 1

b. Dimensions: 6 ft X 6 ft X 10 ft 6 in deep

c. Water depth: 7 ft 11 in

d. Volume: 285 ft3 (2, 100 gallons)

e. Mixer: 1 HP

8. Inorganic Settling Tank

a. Number of tanks: 1

b. Dimensions: 82 ft 8 in long X 20 ft wide X 13 ft 6 in deep

c. Water depth: 10 ft 6 in

d. Volume: 17,360 ft3 (130,000 gallons)

e. Surface area: 1,653 ft2

.9. Sludge Holding Basins

a. Main holding basin

(1) Dimensions: 165 ft X 75 ft. at top
135 ft X 45 ft at
bottom 160 ft X 70
ft at water line

(2) Working depth: 11 ft 6 in

(3) Volume: 101,400 ft3 (760,000 gallons)

(4) Lining: concrete

b. Second holding basin (Northern portion of inorganic sludge holding basin)

10. Discharge into polishing ponds

ATTACHMENT 2C-IIB-4
3M CORDOVA
POLISHING POND DETAIL

The following is a summary of the sizes, volumes, capabilities, etc., of the treatment units that are provided in the polishing ponds portion of the site's wastewater treatment system:

1. Electronic Data Logging and Trend Analysis System

   a. Type: ProVox

   b. Parameters

      (1). pH of discharge from final polishing pond

      (2). Flow from final polishing pond (Discharge A01)

      (3). pH when combined with non-contact process water (Discharge 001) (4).

      Flow of combined discharge (Discharge 001)

      (5) Temperature of combined discharge (Discharge 001)

2. Polishing Pond #2

   a. Dimensions: 320 ft X 100 ft X 360 ft X 105 ft at top
   264 ft X 32 ft X 277 ft X 34 ft at bottom
   17 ft deep

   b. Working depth: 12 ft

   c. Volume: 86,925 ft3 (650,000 gallons)

   d. Liner: 66 mil geotextile polyurea

3. Polishing Pond #3

   a. Dimensions: 245 ft X 186 ft X 316 ft X 199 ft. at top
   187 ft X 118 ft X 232 ft X 126 ft at bottom
   17 ft deep

   b. Working depth: 12 ft

   c. Volume: 445,512 CF (3,332,400 gallons)

   d. Liner: 30 mil polyvinyl chloride (PVC)

Note: Polishing Pond 1 was removed from service with the construction of the Nickel Fluoride Treatment System. The existing polishing ponds (#2 and #3) maintained their previous descriptions even though only two polishing ponds are currently in service.

Attachment 2C-IIIC

Applicability of Federal Effluent Guidelines and Standards to the 3M Cordova NPDES Discharge

Provided below is discussion on a number of federal effluent guidelines. For the reasons that are discussed below, 3M does not believe that any of these standards should be applied at the Cordova plant site.

Part 414 - Organic Chemicals, Plastics, and Synthetic Fibers (OCPSF)

Organic Chemicals, Synthetic Fibers, and Plastics (OCPSF) treatment standards were issued in 1987. In promulgating these standards, EPA recognized that the standards were applicable to certain industries which had reported previously reported production activities under specific Standard Industrial Classification (SIC) codes in the MA-1000 (L) forms which are annually submitted to the Department of Commerce. The specific designations covered under these rules included 2821, 2823, 2824, 2865, and 2869 (See paragraph 414.11 (a)). In paragraph 414.11 (c) EPA specifically exempted those operations which were reported under a number of other SIC codes, including 2843085, 28914, 2899568, 2899597, 2911058, and 2911632.

In accordance with EPA policies, applicability of these standards was first conducted as a part of the next reissuance of the site's NPDES permit which occurred in 1988. During the review and issuance of this permit, 3M provided documentation that almost all manufacturing had been previously reported under SIC 2899597 and on this basis IEPA made a determination that these standards were not applicable to this discharge.

Parts 136 and 439: Pharmaceutical Manufacturing

The Cordova plant manufactures several products that may be subject to the above referenced standards. The manufacturing processes utilize some intermediates that are manufactured at the plant site. However the major portion of these intermediate materials are used in the manufacture of non-pharmaceutical materials.

Processes that produce or utilize a pharmaceutical active ingredient are manufactured in organic solvent based systems. These systems do not employ aqueous-based processing that would generate process wastewaters. Small amounts of wastewater are produced from vacuum jet ejector systems that are utilized on these processes and during infrequent cleaning operations.

Pharmaceutical operations represent a very small amount of the Cordova manufacturing capacity. The total estimated quantity of wastewater generated from pharmaceutical processes is less than 0.5 gpm. This is less than 0.1% of the total process wastewater discharge from the 3M Cordova plant site. The BOD content of this wastewater is approximately 0.5% of the total BOD loading to the plant's biological treatment system.

Attachment 2C-IIIC

Applicability of Federal Effluent Guidelines and Standards to the 3M Cordova NPDES Discharge

Part 455: Pesticide Chemicals

Since the previous permit application in 2007, 3M Cordova has discontinued the production of Pesticide Active Ingredients.

Part 415: Inorganic Chemicals Manufacturing, Subpart H: Hydrofluoric Acid Subcategory

3M Cordova uses a Thermal Oxidation Process to treat process air vent emissions from its fluorochemical operations. In this process fluorine containing materials will be destroyed and converted to hydrofluoric acid. Hydrofluoric acid is removed from the oxidizer off-gas in process scrubbers which have been specially designed to generate an aqueous 30% HF stream (referred to as HF30). HF30 is stored onsite and most of this material is then sold as a product to various outside parties. A portion of the HF30 is treated in the sites wastewater treatment system.

40CFR415, Subpart H is an effluent guideline that was developed for the manufacture of anhydrous HF and aqueous HF solutions that use a specific manufacturing and wastewater treatment process. All of these processes employ fluorspar (CaF2) and sulfuric acid as raw materials. In addition the effluent guideline was developed assuming that 43% of the treated wastewater could be reused in the "kiln residue reslurrying", a process that is specific to the fluorspar/sulfuric acid manufacturing process.

3M does not believe that its HF30 manufacturing operations fall subject to this effluent guideline.

Attachment 2C-VD

Table 2C-3 Pollutants with Potential to Discharge from 3M Cordova Outfalls

The following compounds listed in Table 2C-3 are used at the 3M Cordova site and could possibly enter the plant's wastewater discharge.

Acetaldehyde	Methyl methacrylate
Aniline	Quinoline
Butyl acetate	Styrene
Cyclohexane	Triethanolamine
Diethyl amine	Triethylamine
Epichlorohydrin	Vanadium
Formaldehyde	Vinyl acetate
Furfural	Xylene
Methyl mercaptan	

No testing results at Outfall 001 for any of the listed compounds are available. Several of the compounds listed above are routinely tested at Outfall A01 either as a priority pollutant or as an additional compound. The results of testing conducted since 2014 were as follows:

Compound	Total Number of Samples	Number of Samples Above Detection Limit	Maximum Concentration
Aniline	9	0	<0.005 mg/l
Formaldehyde	12	0	<0.05 mg/l
Methyl methacrylate	9	0	<0.001 mg/l
Styrene	9	0	<0.001 mg/l
Vinyl acetate	9	0	<0.001 mg/l
Xylene (Total)	1	0	<0.003 mg/l
Xylene (m.p)	13	0	<0.002 mg/l
Xylene (o)	13	0	<0.001 mg/l

Attachment 2C-V
Outfall 001

EPA ID # ILD054236443

POLLUTANT		MARK "X"			EFFLUENT							UNITS	
		Testing Required	Believed Present	Believed Absent	Max. Daily Conc.	Max. Daily Mass	Max. 30 Day Conc.	Max. 30 Day Mass	Long Term Avg. Conc.	Long Term Avg. Mass	No. of Analyses	Conc. Units	Mass Units
Part A	Required Parameters												
a.	BOD	X	NA	NA	24.1	1139	12.84	607	6.51	340	349	mg/L	lb
b.	COD	X	NA	NA	57	4704	22.89	1322	9.16	480	1215	mg/L	lb
c.	TOC	X	NA	NA	1.6	104	NA	NA	NA	NA	1	mg/L	lb
d.	TSS	X	NA	NA	4.6	225	1.59	67	0.62	30	693	mg/L	lb
e.	Ammonia	X	NA	NA	6.04	255	NA	NA	0.38	19	42	mg/L	lb
f.	Flow	X	NA	NA	11.6	NA	10.50	NA	6.31	NA	1222	MGD	NA
g.	Temp (winter)	X	NA	NA	96.8	NA	95.1	NA	89.0	NA	636	F	NA
h.	Temp (summer)	X	NA	NA	101.8	NA	97.8	NA	90.8	NA	584	F	NA
i.	pH	X	NA	NA	8.3	NA	NA	NA	8.30-6.65	NA	1216	SU	NA
Part B	Testing requirements determined by presence of pollutant												
a.	Bromide			X									
b.	Chlorine			X									
c.	Color	X	X		<5.0	NA	NA	NA	NA	NA	1	Color Units	NA
d.	Fecal Coliform			X	42	NA	NA	NA	1.02	NA	41	CFU/100 mL	NA
e.	Fluoride	X	X		9.73	265	1.42	142	1.16	62	693	mg/L	lb
f.	Nitrate-Nitrite	X	X		7.4	482	NA	NA	NA	NA	1	mg/L	lb
g.	Nitrogen, Total Organic	X	X		<1.0	NA	NA	NA	NA	NA	1	mg/L	lb
h.	O&G			X									
i.	Phosphorus, Total	X	X		<0.10	NA	NA	NA	NA	NA	1	mg/L	lb
j.	Radioactivity	NA	NA	NA									
(1)	Alpha, Total			X									
(2)	Beta, Total			X									
(3)	Radium, Total			X									
(4)	Radium 226			X									
k.	Sulfate (as SO4)	X	X		287	11003	NA	NA	121	6122	41	mg/L	lb
l.	Sulfide (as S)			X									
m.	Sulfite (as SO3)			X									
n.	Surfactants	X	X		0.33	21	NA	NA	NA	NA	1	mg/L	lb
o.	Aluminum, Total			X									
p.	Barium, Total	X	X		0.052	3.4	NA	NA	NA	NA	1	mg/L	lb
q.	Boron, Total			X									
r.	Cobalt, Total	X	X		<0.0020	NA	NA	NA	NA	NA	1	mg/L	lb
s.	Iron, Total	X	X		1.28	93.6	0.14	24.7	0.10	5.21	348	mg/L	lb
t.	Magnesium, Total	X	X		19	1237	NA	NA	NA	NA	1	mg/L	lb
u.	Molybdenum, Total			X									
v.	Manganese, Total	X	X		3.8	0.23	NA	NA	1.27	0	3	ug/L	lb
w.	Tin, Total			X									
x.	Titanium, Total			X									

NA - Long-term averages not calculated if all results were below reporting limit, or if only one result reported. 30-day values not calculated for pollutants with less than 100 results.

Attachment 2C-V
Outfall 001

	POLLUTANT	MARK "X"			EFFLUENT							UNITS	
		Testing Required	Believed Present	Believed Absent	Max. Daily Conc.	Max. Daily Mass	Max. 30 Day Conc.	Max. 30 Day Mass	Long Term Avg. Conc.	Long Term Avg. Mass	No. of Analyses	Conc. Units	Mass Units
Part C	Testing requirements determined by Table 2C-2 and/or presence of pollutant												
METALS, CYANIDE, AND TOTAL PHENOLS													
1M.	Antimony, Total	X	X		<0.0030	NA	NA	NA	NA	NA	1	mg/L	lb
2M.	Arsenic, Total	X	X		0.0035	0.23	NA	NA	NA	NA	1	mg/L	lb
3M.	Beryllium, Total	X		X	<0.0010	NA	NA	NA	NA	NA	1	mg/L	lb
4M.	Cadmium, Total	X	X		<0.0010	NA	NA	NA	NA	NA	1	mg/L	lb
5M.	Chromium, Total	X	X		<0.0040	NA	NA	NA	NA	NA	1	mg/L	lb
6M.	Copper, Total	X	X		0.012	0.78	NA	NA	NA	NA	1	mg/L	lb
7M.	Lead, Total	X	X		0.0014	0.091	NA	NA	NA	NA	1	mg/L	lb
8M.	Mercury, Total	X	X		<0.00020	NA	NA	NA	NA	NA	3	mg/L	lb
9M.	Nickel, Total	X	X		0.28	17	0.09	5.5	0.03	1.3	349	mg/L	lb
10M.	Selenium, Total	X	X		<0.0010	NA	NA	NA	NA	NA	1	mg/L	lb
11M.	Silver, Total	X		X	<0.0050	NA	NA	NA	NA	NA	1	mg/L	lb
12M.	Thallium, Total	X	X		<0.0010	NA	NA	NA	NA	NA	1	mg/L	lb
13M.	Zinc, Total	X	X		<0.010	NA	NA	NA	NA	NA	1	mg/L	lb
14M.	Cyanide, Total	X	X		<0.0050	NA	NA	NA	NA	NA	4	mg/L	lb
15M.	Phenols, Total	X		X	<0.0050	NA	NA	NA	NA	NA	2	mg/L	lb
DIOXIN													
	2,3,7,8-Tetrachlorodibenzo-P-Dioxin	X		X	<50	NA	NA	NA	NA	NA	1	ug/L	lb
GC/MS FRACTION – VOLATILE COMPOUNDS													
1V.	Accrolein	X		X	<50	NA	NA	NA	NA	NA	1	ug/L	lb
2V.	Acrylonitrile	X		X	<50	NA	NA	NA	NA	NA	1	ug/L	lb
3V.	Benzene	X		X	<5.0	NA	NA	NA	NA	NA	1	ug/L	lb
4V.	Bis (Chloromethyl) Ether	X		X	<10000	NA	NA	NA	NA	NA	1	ug/L	lb
5V.	Bromoform	X		X	<5.0	NA	NA	NA	NA	NA	1	ug/L	lb
6V.	Carbon Tetrachloride	X		X	<5.0	NA	NA	NA	NA	NA	1	ug/L	lb
7V.	Chlorobenzene	X		X	<5.0	NA	NA	NA	NA	NA	1	ug/L	lb
8V.	Chlorodibromomethane	X		X	<5.0	NA	NA	NA	NA	NA	1	ug/L	lb
9V.	Chloroethane	X		X	<10	NA	NA	NA	NA	NA	1	ug/L	lb
10V.	2-Chloroethylvinyl Ether	X		X	<5.0	NA	NA	NA	NA	NA	1	ug/L	lb
11V.	Chloroform	X	X		<5.0	NA	NA	NA	NA	NA	1	ug/L	lb
12V.	Dichlorobromomethane	X		X	<5.0	NA	NA	NA	NA	NA	1	ug/L	lb
13V.	Dichlorodifluoromethane	X	X		<5.0	NA	NA	NA	NA	NA	1	ug/L	lb
14V.	1,1-Dichloroethane	X		X	<5.0	NA	NA	NA	NA	NA	1	ug/L	lb
15V.	1,2-Dichloroethane	X		X	<5.0	NA	NA	NA	NA	NA	1	ug/L	lb
16V.	1,1-Dichloroethylene	X		X	<5.0	NA	NA	NA	NA	NA	1	ug/L	lb
17V.	1,2-Dichloropropane	X		X	<5.0	NA	NA	NA	NA	NA	1	ug/L	lb
18V.	1,3-Dichloropropylene	X		X	<15	NA	NA	NA	NA	NA	1	ug/L	lb
19V.	Ethylbenzene	X		X	<5.0	NA	NA	NA	NA	NA	1	ug/L	lb
20V.	Methyl Bromide	X		X	<10	NA	NA	NA	NA	NA	1	ug/L	lb
21V.	Methyl Chloride	X		X	<10	NA	NA	NA	NA	NA	1	ug/L	lb
22V.	Methylene Chloride	X	X		<5.0	NA	NA	NA	NA	NA	1	ug/L	lb

NA - Long-term averages not calculated if all results were below reporting limit, or if only one result reported. 30-day values not calculated for pollutants with less than 100 results.

Attachment 2C-V
Outfall 001

EPA ID # ILD054236443

POLLUTANT	MARK "X"			EFFLUENT							UNITS	
	Testing Required	Believed Present	Believed Absent	Max. Daily Conc.	Max. Daily Mass	Max. 30 Day Conc.	Max. 30 Day Mass	Long Term Avg. Conc.	Long Term Avg. Mass	No. of Analyses	Conc. Units	Mass Units
23V. 1,1,2,2-Tetrachloroethane	X		X	<5.0	NA	NA	NA	NA	NA	1	ug/L	lb
24V. Tetrachloroethylene	X		X	<5.0	NA	NA	NA	NA	NA	1	ug/L	lb
25V. Toluene	X		X	<5.0	NA	NA	NA	NA	NA	1	ug/L	lb
26V. 1,2-Trans-Dichloroethylene	X		X	<20	NA	NA	NA	NA	NA	1	ug/L	lb
27V. 1,1,1-Trichloroethane	X		X	<5.0	NA	NA	NA	NA	NA	1	ug/L	lb
28V. 1,1,2-Trichloroethane	X		X	<5.0	NA	NA	NA	NA	NA	1	ug/L	lb
29V. Trichloroethylene	X		X	<5.0	NA	NA	NA	NA	NA	1	ug/L	lb
30V. Trichlorofluoromethane	X		X	<5.0	NA	NA	NA	NA	NA	1	ug/L	lb
31V. Vinyl Chloride	X		X	<5.0	NA	NA	NA	NA	NA	1	ug/L	lb
GC/MS FRACTION – ACID COMPOUNDS												
1A. 2-Chlorophenol	X		X	<10	NA	NA	NA	NA	NA	1	ug/L	lb
2A. 2,4-Dichlorophenol	X		X	<10	NA	NA	NA	NA	NA	1	ug/L	lb
3A. 2,4-Dimethylphenol	X		X	<10	NA	NA	NA	NA	NA	1	ug/L	lb
4A. 4,6-Dinitro-O-Cresol	X		X	<50	NA	NA	NA	NA	NA	1	ug/L	lb
5A. 2,4-Dinitrophenol	X		X	<20	NA	NA	NA	NA	NA	1	ug/L	lb
6A. 2-Nitrophenol	X		X	<10	NA	NA	NA	NA	NA	1	ug/L	lb
7A. 4-Nitrophenol	X		X	<20	NA	NA	NA	NA	NA	1	ug/L	lb
8A. P-Chloro-M-Cresol	X		X	<10	NA	NA	NA	NA	NA	1	ug/L	lb
9A. Pentachlorophenol	X		X	<50	NA	NA	NA	NA	NA	1	ug/L	lb
10A. Phenol	X		X	<10	NA	NA	NA	NA	NA	1	ug/L	lb
11A. 2,4,6-Trichlorophenol	X		X	<20	NA	NA	NA	NA	NA	1	ug/L	lb
GC/MS FRACTION – BASE/NEUTRAL COMPOUNDS												
1B. Acenaphthene	X		X	<10	NA	NA	NA	NA	NA	1	ug/L	lb
2B. Acenaphtylene	X		X	<10	NA	NA	NA	NA	NA	1	ug/L	lb
3B. Anthracene	X		X	<10	NA	NA	NA	NA	NA	1	ug/L	lb
4B. Benzidine	X		X	<80	NA	NA	NA	NA	NA	1	ug/L	lb
5B. Benzo (a) Anthracene	X		X	<10	NA	NA	NA	NA	NA	1	ug/L	lb
6B. Benzo (a) Pyrene	X		X	<10	NA	NA	NA	NA	NA	1	ug/L	lb
7B. 3,4-Benzofluoranthene	X		X	<10	NA	NA	NA	NA	NA	1	ug/L	lb
8B. Benzo (ghi) Perylene	X		X	<10	NA	NA	NA	NA	NA	1	ug/L	lb
9B. Benzo (k) Fluoranthene	X		X	<10	NA	NA	NA	NA	NA	1	ug/L	lb
10B. Bis (2-Chloroethoxy) Methane	X		X	<10	NA	NA	NA	NA	NA	1	ug/L	lb
11B. Bis (2-Chloroethyl) Ether	X		X	<10	NA	NA	NA	NA	NA	1	ug/L	lb
12B. Bis (2-Chloroisopropyl) Ether	X		X	<10	NA	NA	NA	NA	NA	1	ug/L	lb
13B. Bis (2-Ethylhexyl) Phthalate	X		X	<10	NA	NA	NA	NA	NA	1	ug/L	lb
14B. 4-Bromophenyl Phenyl Ether	X		X	<10	NA	NA	NA	NA	NA	1	ug/L	lb
15B. Butyl Benzyl Phthalate	X		X	<10	NA	NA	NA	NA	NA	1	ug/L	lb
16B. 2-Chloronaphthalene	X		X	<10	NA	NA	NA	NA	NA	1	ug/L	lb
17B. 4-Chlorophenyl Phenyl Ether	X		X	<10	NA	NA	NA	NA	NA	1	ug/L	lb
18B. Chrysene	X		X	<10	NA	NA	NA	NA	NA	1	ug/L	lb
19B. Dibenzo (a,h) Anthracene	X		X	<10	NA	NA	NA	NA	NA	1	ug/L	lb
20B. 1,2-Dichlorobenzene	X		X	<5.0	NA	NA	NA	NA	NA	1	ug/L	lb

NA - Long-term averages not calculated if all results were below reporting limit, or if only one result reported. 30-day values not calculated for pollutants with less than 100 results.

Attachment 2C-V
Outfall 001

	POLLUTANT	MARK "X"			EFFLUENT							UNITS	
		Testing Required	Believed Present	Believed Absent	Max. Daily Conc.	Max. Daily Mass	Max. 30 Day Conc.	Max. 30 Day Mass	Long Term Avg. Conc.	Long Term Avg. Mass	No. of Analyses	Conc. Units	Mass Units
21B.	1,3-Dichlorobenzene	X		X	<5.0	NA	NA	NA	NA	NA	1	ug/L	lb
22B.	1,4-Dichlorobenzene	X		X	<5.0	NA	NA	NA	NA	NA	1	ug/L	lb
23B.	3,3-Dichlorobenzidine	X		X	<20	NA	NA	NA	NA	NA	1	ug/L	lb
24B.	Diethyl Phthalate	X		X	<10	NA	NA	NA	NA	NA	1	ug/L	lb
25B.	Dimethyl Phthalate	X		X	<10	NA	NA	NA	NA	NA	1	ug/L	lb
26B.	Di-N-Butyl Phthalate	X		X	<10	NA	NA	NA	NA	NA	1	ug/L	lb
27B.	2,4-Dinitrotoluene	X		X	<10	NA	NA	NA	NA	NA	1	ug/L	lb
28B.	2,6-Dinitrotoluene	X		X	<10	NA	NA	NA	NA	NA	1	ug/L	lb
29B.	Di-N-Octyl Phthalate	X		X	<10	NA	NA	NA	NA	NA	1	ug/L	lb
30B.	1,2-Diphenylhydrazine (as Azo-benzene)	X		X	<10	NA	NA	NA	NA	NA	1	ug/L	lb
31B.	Fluoranthene	X		X	<10	NA	NA	NA	NA	NA	1	ug/L	lb
32B.	Fluorene	X		X	<10	NA	NA	NA	NA	NA	1	ug/L	lb
33B.	Hexachlorobenzene	X		X	<10	NA	NA	NA	NA	NA	1	ug/L	lb
34B.	Hexachlorobutadiene	X		X	<10	NA	NA	NA	NA	NA	1	ug/L	lb
35B.	Hexachlorocyclopentadiene	X		X	<20	NA	NA	NA	NA	NA	1	ug/L	lb
36B.	Hexachloroethane	X		X	<10	NA	NA	NA	NA	NA	1	ug/L	lb
37B.	Indeno (1,2,3-cd) Pyrene	X		X	<10	NA	NA	NA	NA	NA	1	ug/L	lb
38B.	Isophorone	X	X		<10	NA	NA	NA	NA	NA	1	ug/L	lb
39B.	Napthalene	X		X	<10	NA	NA	NA	NA	NA	1	ug/L	lb
40B.	Nitrobenzene	X			<10	NA	NA	NA	NA	NA	1	ug/L	lb
41B.	N-Nitrosodimethylamine	X			<10	NA	NA	NA	NA	NA	1	ug/L	lb
42B.	N-Nitrosodi-N-Propylamine	X			<10	NA	NA	NA	NA	NA	1	ug/L	lb
43B.	N-Nitrosodiphenylamine	X			<10	NA	NA	NA	NA	NA	1	ug/L	lb
44B.	Phenanthrene	X			<10	NA	NA	NA	NA	NA	1	ug/L	lb
45B.	Pyrene	X			<10	NA	NA	NA	NA	NA	1	ug/L	lb
46B.	1,2,4-Trichlorobenzene	X			<10	NA	NA	NA	NA	NA	1	ug/L	lb
GC/MS FRACTION – PESTICIDES													
1P.	Aldrin	X		X	<0.50	NA	NA	NA	NA	NA	1	ug/L	lb
2P.	Alpha-BHC	X		X	<0.50	NA	NA	NA	NA	NA	1	ug/L	lb
3P.	Beta-BHC	X	X		<0.50	NA	NA	NA	NA	NA	1	ug/L	lb
4P.	Gamma-BHC	X		X	<0.50	NA	NA	NA	NA	NA	1	ug/L	lb
5P.	Delta-BHC	X		X	<0.50	NA	NA	NA	NA	NA	1	ug/L	lb
6P.	Chlordane	X		X	<0.50	NA	NA	NA	NA	NA	1	ug/L	lb
7P.	4,4'-DDT	X		X	<1.0	NA	NA	NA	NA	NA	1	ug/L	lb
8P.	4,4'-DDE	X		X	<1.0	NA	NA	NA	NA	NA	1	ug/L	lb
9P.	4,4'-DDD	X		X	<1.0	NA	NA	NA	NA	NA	1	ug/L	lb
10P.	Dieldrin	X		X	<1.0	NA	NA	NA	NA	NA	1	ug/L	lb
11P.	Alpha-Endosulfan	X		X	<0.50	NA	NA	NA	NA	NA	1	ug/L	lb
12P.	Beta-Endosulfan	X		X	<1.0	NA	NA	NA	NA	NA	1	ug/L	lb
13P.	Endosulfan Sulfate	X		X	<1.0	NA	NA	NA	NA	NA	1	ug/L	lb
14P.	Endrin	X		X	<1.0	NA	NA	NA	NA	NA	1	ug/L	lb
15P.	Endrin Aldehyde	X		X	<1.0	NA	NA	NA	NA	NA	1	ug/L	lb
16P.	Heptachlor	X		X	<0.50	NA	NA	NA	NA	NA	1	ug/L	lb

NA - Long-term averages not calculated if all results were below reporting limit, or if only one result reported. 30-day values not calculated for pollutants with less than 100 results.

Attachment 2C-V
Outfall 001

EPA ID # ILD054236443

POLLUTANT	MARK "X"			EFFLUENT							UNITS	
	Testing Required	Believed Present	Believed Absent	Max. Daily Conc.	Max. Daily Mass	Max. 30 Day Conc.	Max. 30 Day Mass	Long Term Avg. Conc.	Long Term Avg. Mass	No. of Analyses	Conc. Units	Mass Units
17P. Heptachlor Epoxide	X		X	<0.50	NA	NA	NA	NA	NA	1	ug/L	lb
18P. PCB-1242	X		X	<5.0	NA	NA	NA	NA	NA	1	ug/L	lb
19P. PCB-1254	X		X	<10	NA	NA	NA	NA	NA	1	ug/L	lb
20P. PCB-1221	X		X	<10	NA	NA	NA	NA	NA	1	ug/L	lb
21P. PCB-1232	X		X	<5.0	NA	NA	NA	NA	NA	1	ug/L	lb
22P. PCB-1248	X		X	<5.0	NA	NA	NA	NA	NA	1	ug/L	lb
23P. PCB-1260	X		X	<10	NA	NA	NA	NA	NA	1	ug/L	lb
24P. PCB-1016	X		X	<5.0	NA	NA	NA	NA	NA	1	ug/L	lb
25P. Toxaphene	X		X	<5.0	NA	NA	NA	NA	NA	1	ug/L	lb

NA - Long-term averages not calculated if all results were below reporting limit, or if only one result reported. 30-day values not calculated for pollutants with less than 100 results.

Attachment 2C-V
Outfall A01

	POLLUTANT	MARK "X"			EFFLUENT							UNITS	
		Testing Required	Believed Present	Believed Absent	Max. Daily Conc.	Max. Daily Mass	Max. 30 Day Conc.	Max. 30 Day Mass	Long Term Avg. Conc.	Long Term Avg. Mass	No. of Analyses	Conc. Units	Mass Units
Part A	Required Parameters												
a.	BOD	X	NA	NA	123	598	29.6	129	12.7	61.4	689	mg/L	lb
b.	COD	X	NA	NA	409	2166	294	1378	71.7	344	1216	mg/L	lb
c.	TOC	X	NA	NA	13	64	NA	NA	NA	NA	1	mg/L	lb
d.	TSS	X	NA	NA	44	307	28	157	10	47.8	698	mg/L	lb
e.	Ammonia	X	NA	NA	21.8	125	14	74.6	4.87	23.3	175	mg/L	lb
f.	Flow	X	NA	NA	1.2196	NA	0.7845	NA	0.5735	NA	1219	MGD	NA
g.	Temp (winter)	X	NA	NA									
h.	Temp (summer)	X	NA	NA									
i.	pH	X	NA	NA	8.8	NA	NA	NA	8.80-7.29	NA	1217	SU	NA
Part B	Testing requirements determined by presence of pollutant												
a.	Bromide			X									
b.	Chlorine			X									
c.	Color	X	X		45	NA	NA	NA	NA	NA	1	Color Units	NA
d.	Fecal Coliform			X									
e.	Fluoride	X	X		37	192	28	121	12.8	61.9	696	mg/L	lb
f.	Nitrate-Nitrite	X	X		1.1	5.4	NA	NA	NA	NA	1	mg/L	lb
g.	Nitrogen, Total Organic	X	X		1.7	8.4	NA	NA	NA	NA	1	mg/L	lb
h.	O&G			X									
i.	Phosphorus, Total	X	X		<0.10	NA	NA	NA	NA	NA	1	mg/L	lb
j.	Radioactivity	NA	NA	NA									
(1)	Alpha, Total			X									
(2)	Beta, Total			X									
(3)	Radium, Total			X									
(4)	Radium 226			X									
k.	Sulfate (as SO4)	X	X		2610	18912	NA	NA	1426	7163	35	mg/L	lb
l.	Sulfide (as S)			X									
m.	Sulfite (as SO3)			X									
n.	Surfactants	X	X		7.8	38	NA	NA	NA	NA	1	mg/L	lb
o.	Aluminum, Total			X									
p.	Barium, Total	X	X		62	0.53	NA	NA	26	0.14	26	ug/L	lb
q.	Boron, Total			X									
r.	Cobalt, Total	X	X		2.5	0.021	NA	NA	0.72	0.0042	26	ug/L	lb
s.	Iron, Total	X	X		1.75	8.75	0.36	1.55	0.15	0.71	706	mg/L	lb
t.	Magnesium, Total	X	X	X	17	84	NA	NA	NA	NA	1	mg/L	lb
u.	Molybdenum, Total												
v.	Manganese, Total	X	X		12.7	0.0691	NA	NA	3.43	0.0171	26	ug/L	lb
w.	Tin, Total			X									
x.	Titanium, Total			X									
Part C	Testing requirements determined by Table 2c-2 and/or presence of pollutai												

NA - Long-term averages not calculated if all results were below reporting limit, or if only one result reported. 30-day values not calculated for pollutants with less than 100 results.

Attachment 2C-V
Outfall A01

EPA ID # ILD054236443

POLLUTANT	MARK "X"			EFFLUENT							UNITS	
	Testing Required	Believed Present	Believed Absent	Max. Daily Conc.	Max. Daily Mass	Max. 30 Day Conc.	Max. 30 Day Mass	Long Term Avg. Conc.	Long Term Avg. Mass	No. of Analyses	Conc. Units	Mass Units
METALS, CYANIDE, AND TOTAL PHENOLS												
1M. Antimony, Total	X	X		25.6	0.116	NA	NA	7.30	0.0354	26	ug/L	lb
2M. Arsenic, Total	X	X		7.0	0.037	NA	NA	4.0	0.019	26	ug/L	lb
3M. Beryllium, Total	X		X	3.3	0.017	NA	NA	0.13	0.00067	26	ug/L	lb
4M. Cadmium, Total	X	X		<3.0	NA	NA	NA	NA	NA	26	ug/L	lb
5M. Chromium, Total	X	X		3.7	0.015	NA	NA	0.62	0.0029	23	ug/L	lb
6M. Copper, Total	X	X		1500	6.28	NA	NA	95.7	0.444	26	ug/L	lb
7M. Lead, Total	X	X		34	0.16	NA	NA	2.1	0.010	26	ug/L	lb
8M. Mercury, Total	X	X		0.26	0.0022	NA	NA	0.014	0.00012	26	ug/L	lb
9M. Nickel, Total	X	X		0.7	2.7	0.20	0.86	0.067	0.31	701	mg/L	lb
10M. Selenium, Total	X	X		53	0.22	NA	NA	13	0.058	26	ug/L	lb
11M. Silver, Total	X		X	<10.0	NA	NA	NA	NA	NA	26	ug/L	lb
12M. Thallium, Total	X	X		2.8	0.011	NA	NA	0.11	0.00044	26	ug/L	lb
13M. Zinc, Total	X	X		700	2.93	NA	NA	58.0	0.277	26	ug/L	lb
14M. Cyanide, Total	X	X		0.0036	0.018	NA	NA	0.00043	0.0021	27	mg/L	lb
15M. Phenols, Total	X		X	<0.0050	NA	NA	NA	NA	NA	1	mg/L	lb
DIOXIN												
2,3,7,8-Tetrachlorodibenzo-P-Dioxin			X	<12	NA	NA	NA	NA	NA	13	pg/mL	lb
GC/MS FRACTION – VOLATILE COMPOUNDS												
1V. Acrolein	X		X	<30	NA	NA	NA	NA	NA	13	ug/L	lb
2V. Acrylonitrile	X		X	<10.0	NA	NA	NA	NA	NA	13	ug/L	lb
3V. Benzene	X		X	<1.0	NA	NA	NA	NA	NA	13	ug/L	lb
4V. Bis (Chloromethyl) Ether	X		X	<10000	NA	NA	NA	NA	NA	10	ug/L	lb
5V. Bromoform	X		X	<5.0	NA	NA	NA	NA	NA	13	ug/L	lb
6V. Carbon Tetrachloride	X		X	<1.0	NA	NA	NA	NA	NA	13	ug/L	lb
7V. Chlorobenzene	X		X	<1.0	NA	NA	NA	NA	NA	13	ug/L	lb
8V. Chlorodibromomethane	X		X	<1.0	NA	NA	NA	NA	NA	13	ug/L	lb
9V. Chloroethane	X		X	<4.0	NA	NA	NA	NA	NA	13	ug/L	lb
10V. 2-Chloroethylvinyl Ether	X		X	<10.0	NA	NA	NA	NA	NA	13	ug/L	lb
11V. Chloroform	X	X		0.55	0.0026	NA	NA	0.042	0.00020	13	ug/L	lb
12V. Dichlorobromomethane	X		X	<1.0	NA	NA	NA	NA	NA	12	ug/L	lb
13V. Dichlorodifluoromethane	X	X		<1.0	NA	NA	NA	NA	NA	10	ug/L	lb
14V. 1,1-Dichloroethane	X		X	<1.0	NA	NA	NA	NA	NA	13	ug/L	lb
15V. 1,2-Dichloroethane	X		X	<1.0	NA	NA	NA	NA	NA	13	ug/L	lb
16V. 1,1-Dichloroethylene	X		X	<1.0	NA	NA	NA	NA	NA	13	ug/L	lb
17V. 1,2-Dichloropropane	X		X	<4.0	NA	NA	NA	NA	NA	13	ug/L	lb
18V. 1,3-Dichloropropylene	X		X	<4.0	NA	NA	NA	NA	NA	25	ug/L	lb
19V. Ethylbenzene	X		X	<1.0	NA	NA	NA	NA	NA	13	ug/L	lb
20V. Methyl Bromide	X		X	5.3	0.025	NA	NA	0.70	0.0034	13	ug/L	lb
21V. Methyl Chloride	X		X	1.7	0.0079	NA	NA	0.15	0.00069	13	ug/L	lb

NA - Long-term averages not calculated if all results were below reporting limit, or if only one result reported. 30-day values not calculated for pollutants with less than 100 results.

Attachment 2C-V
Outfall A01

POLLUTANT	MARK "X"			EFFLUENT							UNITS	
	Testing Required	Believed Present	Believed Absent	Max. Daily Conc.	Max. Daily Mass	Max. 30 Day Conc.	Max. 30 Day Mass	Long Term Avg. Conc.	Long Term Avg. Mass	No. of Analyses	Conc. Units	Mass Units
22V. Methylene Chloride	X	X		<5.0	NA	NA	NA	NA	NA	13	ug/L	lb
23V. 1,1,2,2-Tetrachloroethane	X		X	<1.0	NA	NA	NA	NA	NA	13	ug/L	lb
24V. Tetrachloroethylene	X		X	<2.5	NA	NA	NA	NA	NA	13	ug/L	lb
25V. Toluene	X		X	<1.0	NA	NA	NA	NA	NA	13	ug/L	lb
26V. 1,2-Trans-Dichloroethylene	X		X	<1.0	NA	NA	NA	NA	NA	13	ug/L	lb
27V. 1,1,1-Trichloroethane	X		X	<1.0	NA	NA	NA	NA	NA	13	ug/L	lb
28V. 1,1,2-Trichloroethane	X		X	<1.0	NA	NA	NA	NA	NA	13	ug/L	lb
29V. Trichloroethylene	X		X	<1.0	NA	NA	NA	NA	NA	14	ug/L	lb
30V. Trichlorofluoromethane	X		X	<1.0	NA	NA	NA	NA	NA	13	ug/L	lb
31V. Vinyl Chloride	X		X	<2.5	NA	NA	NA	NA	NA	13	ug/L	lb
GC/MS FRACTION – ACID COMPOUNDS												
1A. 2-Chlorophenol	X		X	<10.4	NA	NA	NA	NA	NA	13	ug/L	lb
2A. 2,4-Dichlorophenol	X		X	<10.4	NA	NA	NA	NA	NA	13	ug/L	lb
3A. 2,4-Dimethylphenol	X		X	<52.1	NA	NA	NA	NA	NA	13	ug/L	lb
4A. 4,6-Dinitro-O-Cresol	X		X	<10.4	NA	NA	NA	NA	NA	15	ug/L	lb
5A. 2,4-Dinitrophenol	X		X	<10.4	NA	NA	NA	NA	NA	13	ug/L	lb
6A. 2-Nitrophenol	X		X	<10.4	NA	NA	NA	NA	NA	13	ug/L	lb
7A. 4-Nitrophenol	X		X	<10.4	NA	NA	NA	NA	NA	13	ug/L	lb
8A. P-Chloro-M-Cresol	X		X	<10.4	NA	NA	NA	NA	NA	13	ug/L	lb
9A. Pentachlorophenol	X		X	<20.8	NA	NA	NA	NA	NA	13	ug/L	lb
10A. Phenol	X		X	58	0.27	NA	NA	4.46	0.0208	13	ug/L	lb
11A. 2,4,6-Trichlorophenol	X		X	<10.4	NA	NA	NA	NA	NA	13	ug/L	lb
GC/MS FRACTION – BASE/NEUTRAL COMPOUNDS												
1B. Acenaphthene	X		X	<10.4	NA	NA	NA	NA	NA	13	ug/L	lb
2B. Acenaphtylene	X		X	<10.4	NA	NA	NA	NA	NA	13	ug/L	lb
3B. Anthracene	X		X	<10.4	NA	NA	NA	NA	NA	13	ug/L	lb
4B. Benzidine	X		X	<100	NA	NA	NA	NA	NA	13	ug/L	lb
5B. Benzo (a) Anthracene	X		X	<10.4	NA	NA	NA	NA	NA	13	ug/L	lb
6B. Benzo (a) Pyrene	X		X	<10.4	NA	NA	NA	NA	NA	12	ug/L	lb
7B. 3,4-Benzofluoranthene	X		X	<10.4	NA	NA	NA	NA	NA	13	ug/L	lb
8B. Benzo (ghi) Perylene	X		X	<10.4	NA	NA	NA	NA	NA	12	ug/L	lb
9B. Benzo (k) Fluoranthene	X		X	<10.4	NA	NA	NA	NA	NA	13	ug/L	lb
10B. Bis (2-Chloroethoxy) Methane	X		X	<10.4	NA	NA	NA	NA	NA	13	ug/L	lb
11B. Bis (2-Chloroethyl) Ether	X		X	<10.4	NA	NA	NA	NA	NA	13	ug/L	lb
12B. Bis (2-Chloroisopropyl)	X		X	<10.4	NA	NA	NA	NA	NA	13	ug/L	lb
13B. Bis (2-Ethylhexyl) Phthalate	X		X	<10.4	NA	NA	NA	NA	NA	13	ug/L	lb
14B. 4-Bromophenyl Phenyl Ether	X		X	<10.4	NA	NA	NA	NA	NA	13	ug/L	lb
15B. Butyl Benzyl Phthalate	X		X	<10.4	NA	NA	NA	NA	NA	13	ug/L	lb
16B. 2-Chloronaphthalene	X		X	<10.4	NA	NA	NA	NA	NA	13	ug/L	lb
17B. 4-Chlorophenyl Phenyl Ether	X		X	<10.4	NA	NA	NA	NA	NA	13	ug/L	lb

NA - Long-term averages not calculated if all results were below reporting limit, or if only one result reported. 30-day values not calculated for pollutants with less than 100 results.

Attachment 2C-V
Outfall A01

EPA ID # ILD054236443

POLLUTANT	MARK "X"			EFFLUENT							UNITS	
	Testing Required	Believed Present	Believed Absent	Max. Daily Conc.	Max. Daily Mass	Max. 30 Day Conc.	Max. 30 Day Mass	Long Term Avg. Conc.	Long Term Avg. Mass	No. of Analyses	Conc. Units	Mass Units
18B. Chrysene	X		X	<10.4	NA	NA	NA	NA	NA	13	ug/L	lb
19B. Dibenzo (a,h) Anthracene	X		X	<10.4	NA	NA	NA	NA	NA	13	ug/L	lb
20B. 1,2-Dichlorobenzene	X		X	<5.0	NA	NA	NA	NA	NA	12	ug/L	lb
21B. 1,3-Dichlorobenzene	X		X	<5.0	NA	NA	NA	NA	NA	12	ug/L	lb
22B. 1,4-Dichlorobenzene	X		X	<5.0	NA	NA	NA	NA	NA	12	ug/L	lb
23B. 3,3-Dichlorobenzidine	X		X	<52.1	NA	NA	NA	NA	NA	12	ug/L	lb
24B. Diethyl Phthalate	X		X	<10.4	NA	NA	NA	NA	NA	13	ug/L	lb
25B. Dimethyl Phthalate	X		X	<10.4	NA	NA	NA	NA	NA	13	ug/L	lb
26B. Di-N-Butyl Phthalate	X		X	<10.4	NA	NA	NA	NA	NA	13	ug/L	lb
27B. 2,4-Dinitrotoluene	X		X	<10.4	NA	NA	NA	NA	NA	13	ug/L	lb
28B. 2,6-Dinitrotoluene	X		X	<10.4	NA	NA	NA	NA	NA	13	ug/L	lb
29B. Di-N-Octyl Phthalate	X		X	<10.4	NA	NA	NA	NA	NA	13	ug/L	lb
30B. 1,2-Diphenylhydrazine (as Azo-benzene)	X		X	<10.4	NA	NA	NA	NA	NA	12	ug/L	lb
31B. Fluoranthene	X		X	<10.4	NA	NA	NA	NA	NA	13	ug/L	lb
32B. Fluorene	X		X	<10.4	NA	NA	NA	NA	NA	13	ug/L	lb
33B. Hexachlorobenzene	X		X	<10.4	NA	NA	NA	NA	NA	13	ug/L	lb
34B. Hexachlorobutadiene	X		X	<10.4	NA	NA	NA	NA	NA	13	ug/L	lb
35B. Hexachlorocyclopentadiene	X		X	<52.1	NA	NA	NA	NA	NA	13	ug/L	lb
36B. Hexachloroethane	X		X	<10.4	NA	NA	NA	NA	NA	13	ug/L	lb
37B. Indeno (1,2,3-cd) Pyrene	X		X	<10.4	NA	NA	NA	NA	NA	13	ug/L	lb
38B. Isophorone	X	X		<10.4	NA	NA	NA	NA	NA	13	ug/L	lb
39B. Napthalene	X		X	<10.4	NA	NA	NA	NA	NA	13	ug/L	lb
40B. Nitrobenzene	X		X	<10.4	NA	NA	NA	NA	NA	13	ug/L	lb
41B. N-Nitrosodimethylamine	X		X	<10.4	NA	NA	NA	NA	NA	13	ug/L	lb
42B. N-Nitrosodi-N-Propylamine	X		X	<10.4	NA	NA	NA	NA	NA	13	ug/L	lb
43B. N-Nitrosodiphenylamine	X		X	<10.4	NA	NA	NA	NA	NA	13	ug/L	lb
44B. Phenanthrene	X		X	<10.4	NA	NA	NA	NA	NA	13	ug/L	lb
45B. Pyrene	X		X	<10.4	NA	NA	NA	NA	NA	13	ug/L	lb
46B. 1,2,4-Trichlorobenzene	X		X	<10.4	NA	NA	NA	NA	NA	13	ug/L	lb
GC/MS FRACTION – PESTICIDES												
1P. Aldrin	X		X	0.044	0.00022	NA	NA	0.0037	1.9E-05	12	ug/L	lb
2P. Alpha-BHC	X		X	0.14	0.00071	NA	NA	0.011	5.5E-05	13	ug/L	lb
3P. Beta-BHC	X	X		0.029	0.00015	NA	NA	0.0022	1.1E-05	13	ug/L	lb
4P. Gamma-BHC	X		X	<0.50	NA	NA	NA	NA	NA	12	ug/L	lb
5P. Delta-BHC	X		X	0.055	0.00028	NA	NA	0.0078	3.8E-05	13	ug/L	lb
6P. Chlordane	X		X	<5.0	NA	NA	NA	NA	NA	9	ug/L	lb
7P. 4,4'-DDT	X		X	<1.0	NA	NA	NA	NA	NA	13	ug/L	lb
8P. 4,4'-DDE	X		X	<1.0	NA	NA	NA	NA	NA	13	ug/L	lb
9P. 4,4'-DDD	X		X	<1.0	NA	NA	NA	NA	NA	13	ug/L	lb
10P. Dieldrin	X		X	<1.0	NA	NA	NA	NA	NA	13	ug/L	lb
11P. Alpha-Endosulfan	X		X	<0.50	NA	NA	NA	NA	NA	13	ug/L	lb

NA - Long-term averages not calculated if all results were below reporting limit, or if only one result reported. 30-day values not calculated for pollutants with less than 100 results.

Attachment 2C-V
Outfall A01

POLLUTANT	MARK "X"			EFFLUENT							UNITS	
	Testing Required	Believed Present	Believed Absent	Max. Daily Conc.	Max. Daily Mass	Max. 30 Day Conc.	Max. 30 Day Mass	Long Term Avg. Conc.	Long Term Avg. Mass	No. of Analyses	Conc. Units	Mass Units
12P. Beta-Endosulfan	X		X	<1.0	NA	NA	NA	NA	NA	13	ug/L	lb
13P. Endosulfan Sulfate	X		X	<1.0	NA	NA	NA	NA	NA	13	ug/L	lb
14P. Endrin	X		X	<1.0	NA	NA	NA	NA	NA	13	ug/L	lb
15P. Endrin Aldehyde	X		X	<1.0	NA	NA	NA	NA	NA	13	ug/L	lb
16P. Heptachlor	X		X	<0.50	NA	NA	NA	NA	NA	13	ug/L	lb
17P. Heptachlor Epoxide	X		X	<0.50	NA	NA	NA	NA	NA	13	ug/L	lb
18P. PCB-1242	X		X	<5.0	NA	NA	NA	NA	NA	13	ug/L	lb
19P. PCB-1254	X		X	<10	NA	NA	NA	NA	NA	13	ug/L	lb
20P. PCB-1221	X		X	<10	NA	NA	NA	NA	NA	13	ug/L	lb
21P. PCB-1232	X		X	<5.0	NA	NA	NA	NA	NA	13	ug/L	lb
22P. PCB-1248	X		X	<5.0	NA	NA	NA	NA	NA	13	ug/L	lb
23P. PCB-1260	X		X	<10	NA	NA	NA	NA	NA	13	ug/L	lb
24P. PCB-1016	X		X	<5.0	NA	NA	NA	NA	NA	13	ug/L	lb
25P. Toxaphene	X		X	<5.0	NA	NA	NA	NA	NA	13	ug/L	lb

NA - Long-term averages not calculated if all results were below reporting limit, or if only one result reported. 30-day values not calculated for pollutants with less than 100 results.

Please print or type in the unshaded areas only.

EPA ID Number (*copy from Item 1 of Form 1*)
ILD054236443

Form Approved. OMB No. 2040-0086
Approval expires 5-31-92

FORM 2F NPDES

EPA

U.S. Environmental Protection Agency
Washington, DC 20460

Application for Permit to Discharge Storm Water Discharges Associated with Industrial Activity

Paperwork Reduction Act Notice

Public reporting burden for this application is estimated to average 28.6 hours per application, including time for reviewing instructions, searching existing data sources, gathering and maintaining the data needed, and completing and reviewing the collection of information. Send comments regarding the burden estimate, any other aspect of this collection of information, or suggestions for improving this form, including suggestions which may increase or reduce this burden to: Chief, Information Policy Branch, PM-223, U.S. Environmental Protection Agency, 1200 Pennsylvania Avenue, NW, Washington, DC 20460, or Director, Office of Information and Regulatory Affairs, Office of Management and Budget, Washington, DC 20503.

I. Outfall Location

For each outfall, list the latitude and longitude of its location to the nearest 15 seconds and the name of the receiving water.

A. Outfall Number (*list*)	B. Latitude			C. Longitude			D. Receiving Water (*name*)
A (002)	41.00	44.00	29.00	90.00	17.00	10.00	Mississippi River
C (003)	41.00	44.00	29.00	90.00	17.00	34.00	Mississippi River
D (004)	41.00	44.00	29.00	90.00	17.00	41.00	Mississippi River

II. Improvements

A. Are you now required by any Federal, State, or local authority to meet any implementation schedule for the construction, upgrading or operation of wastewater treatment equipment or practices or any other environmental programs which may affect the discharges described in this application? This includes, but is not limited to, permit conditions, administrative or enforcement orders, enforcement compliance schedule letters, stipulations, court orders, and grant or loan conditions.

1. Identification of Conditions, Agreements, Etc.	2. Affected Outfalls		3. Brief Description of Project	4. Final Compliance Date	
	number	source of discharge		a. req.	b. proj.
NA	NA	NA	NA		

B. You may attach additional sheets describing any additional water pollution (or other environmental projects which may affect your discharges) you now have under way or which you plan. Indicate whether each program is now under way or planned, and indicate your actual or planned schedules for construction.

III. Site Drainage Map

Attach a site map showing topography (or indicating the outline of drainage areas served by the outfalls(s) covered in the application if a topographic map is unavailable) depicting the facility including: each of its intake and discharge structures; the drainage area of each storm water outfall; paved areas and buildings within the drainage area of each storm water outfall, each known past or present areas used for outdoor storage of disposal of significant materials, each existing structural control measure to reduce pollutants in storm water runoff, materials loading and access areas, areas where pesticides, herbicides, soil conditioners and fertilizers are applied; each of its hazardous waste treatment, storage or disposal units (including each area not required to have a RCRA permit which is used for accumulating hazardous waste under 40 CFR 262.34); each well where fluids from the facility are injected underground; springs, and other surface water bodies which received storm water discharges from the facility.

Continue on Page 2

Continued from the Front

IV. Narrative Description of Pollutant Sources

A. For each outfall, provide an estimate of the area (include units) of imperious surface drained by the outfall.

Outfall Number	Area of Impervious Surface *(provide units)*	Total Area Drained *(provide units)*
A (002)	7.6 acres	109.5 acres
C (003)	13.5 acres	28.0 acres
D (004)	35.0 acres	145.7 acres

Reference CORD-888-C-911 Drawing, subwatershed information.

Outfall 002 data came from the subwatershed A data in the legend. (considered subwatershed A-1 to access the river through filtration and not outfall 002 discharge pipe, therefore, did not include this data on application)

Outfall 003 data came from combining subwatershed B (14.5) and C (13.5) total drainage area. Estimated 12.1 acres of impervious surface (estimated 90% impervious)for subwatershed C and used 1.4 acres impervious for watershed B (same as drawing).

Outfall 004 data came from the sub-watershed data in the legend. Modified impervious surface area from 23.3 to an estimate of 35 acres.

Considered all other watersheds to reach river through filtration and not a discharge outfall.

B. Provide a narrative description of significant materials that are currently or in the past three years have been treated, stored or disposed in a manner to allow exposure to storm water; method of treatment, storage, or disposal; past and present materials management practices employed to minimize contact by these materials with storm water runoff; materials loading and access areas, and the location, manner, and frequency in which pesticides, herbicides, soil conditioners, and fertilizers are applied.

See Attachment 2F-IVB-1, Onsite Storage, Handling, and Disposal of Significant Materials at 3M Cordova

See Attachment 2F-IVB-2, Summary of Bulk Storage at 3M Cordova

C. For each outfall, provide the location and a description of existing structural and nonstructural control measures to reduce pollutants in storm water runoff; and a description of the treatment the storm water receives, including the schedule and type of maintenance for control and treatment measures and the ultimate disposal of any solid or fluid wastes other than by discharge.

Outfall Number	Treatment	List Codes from Table 2F-1
	See Attachment 2F-IVC, Description of 3M Cordova Stormwater Control Systems	

V. Nonstormwater Discharges

A. I certify under penalty of law hat the outfall(s) covered by this application have been tested or evaluated for the presence of nonstormwater discharges, and that all nonstormwater discharged from these outfall(s) are identified in either an accompanying Form 2C or From 2E application for the outfall.

Name and Official Title *(type or print)*	Signature	Date Signed
John Portz, Vice President		

B. Provide a description of the method used, the date of any testing, and the onsite drainage points that were directly observed during a test.

Field verification and review of schematic diagrams

VI. Significant Leaks or Spills

Provide existing information regarding the history of significant leaks or spills of toxic or hazardous pollutants at the facility in the last three years, including the approximate date and location of the spill or leak, and the type and amount of material released.

See Attachment 2F-VI.

Continue on Page 3

Continued from Page 2

EPA ID Number *(copy from Item 1 of Form 1)*
ILD054236443

VII. Discharge Information

A, B, C, & D: See instructions before proceeding. Complete one set of tables for each outfall. Annotate the outfall number in the space provided. Table VII-A, VII-B, VII-C are included on separate sheets numbers VII-1 and VII-2.

E. Potential discharges not covered by analysis – is any toxic pollutant listed in table 2F-2, 2F-3, or 2F-4, a substance or a component of a substance which you currently use or manufacture as an intermediate or final product or byproduct?

☑ Yes (*list all such pollutants below*) ☐ No (*go to Section IX*)

See highlighted compounds on table 2F-2, 2F-3 and 2F-4

Note:
Methyl mercaptan is present as an impurity at a concentration of 0.05% in a raw material used at 3M Cordova. 3M Cordova was unable to find a laboratory with the capability of analyzing for methyl mercaptan after an extensive search of analytical laboratories. Because of this reason, the extremely low concentration in the raw material, and the unlikely means for it to be discharged through a stormwater outfall, methyl mercaptan was not analyzed. All other highlighted compounds were tested for in the stormwater discharges for Outfalls 002-004.

VIII. Biological Toxicity Testing Data

Do you have any knowledge or reason to believe that any biological test for acute or chronic toxicity has been made on any of your discharges or on a receiving water in relation to your discharge within the last 3 years?

☐ Yes (*list all such pollutants below*) ☑ No (*go to Section IX*)

IX. Contract Analysis Information

Were any of the analyses reported in Item VII performed by a contract laboratory or consulting firm?

☑ Yes (*list the name, address, and telephone number of, and pollutants analyzed by, each such laboratory or firm below*) ☐ No (*go to Section X*)

A. Name	B. Address	C. Area Code & Phone No.	D. Pollutants Analyzed
PDC Laboratories	2231 W. Altorfer Drive Peoria, IL 61615	(309) 683-1743	TOC, Color, TN, TP, Nitrate-Nitrite, Cyanide, Metals (except Fe & Ni), Total Phenols, 126 PP
TestAmerica Laboratories, Inc.	704 Enterprise Drive Cedar Falls, IA 50613	(319) 277-2401	BOD5, FC, Ammonia, Sulfate, Formaldehyde
Pace Analytical Services, Inc.	1700 Elm Street SE Minneapolis, MN 55414	(612) 607-6398	Asbestos, Dioxin, Butyl acetate, Diethyl amine, Epichlorohydrin, Quinoline, Vanadium

X. Certification

I certify under penalty of law that this document and all attachments were prepared under my direction or supervision in accordance with a system designed to assure that qualified personnel properly gather and evaluate the information submitted. Based on my inquiry of the person or persons who manage the system or those persons directly responsible for gathering the information, the information submitted is, to the best of my knowledge and belief, true, accurate, and complete. I am aware that there are significant penalties for submitting false information, including the possibility of fine and imprisonment for knowing violations.

A. Name & Official Title (*Type Or Print*)	B. Area Code and Phone No.
John Portz, Vice President MRD Division	(651) 575-1362
C. Signature	D. Date Signed

EPA Form 3510-2F (1-92)

EPA ID Number (*copy from Item 1 of Form 1*)
ILD054236443

Form Approved. OMB No. 2040-0086
Approval expires 5-31-92

VII. Discharge information *(Continued from page 3 of Form 2F)*

Part A – You must provide the results of at least one analysis for every pollutant in this table. Complete one table for each outfall. See instructions for additional details.

See Attachments 2F-VII - Outfall 002, 2F-VII - Outfall 003, and 2F-VII Outfall 004 for sampling data

Part B – List each pollutant that is limited in an effluent guideline which the facility is subject to or any pollutant listed in the facility's NPDES permit for its process wastewater (if the facility is operating under an existing NPDES permit). Complete one table for each outfall. See the instructions for additional details and requirements.

Pollutant and CAS Number *(if available)*	Maximum Values *(include units)*		Average Values *(include units)*		Number of Storm Events Sampled	Sources of Pollutants
	Grab Sample Taken During First 20 Minutes	Flow-Weighted Composite	Grab Sample Taken During First 20 Minutes	Flow-Weighted Composite		

See Attachments 2F-VII - Outfall 002, 2F-VII - Outfall 003, and 2F-VII Outfall 004 for sampling data

Continue on Reverse

Continued from the Front

Part C - List each pollutant shown in Table 2F-2, 2F-3, and 2F-4 that you know or have reason to believe is present. See the instructions for additional details and requirements. Complete one table for each outfall.

Pollutant and CAS Number *(if available)*	Maximum Values *(include units)*		Average Values *(include units)*		Number of Storm Events Sampled	Sources of Pollutants
	Grab Sample Taken During First 20 Minutes	Flow-Weighted Composite	Grab Sample Taken During First 20 Minutes	Flow-Weighted Composite		
See Attachments 2F-VII - Outfall 002, 2F-VII - Outfall 003, and 2F-VII Outfall 004 for sampling data						

Part D – Provide data for the storm event(s) which resulted in the maximum values for the flow weighted composite sample.

1. Date of Storm Event	2. Duration of Storm Event *(in minutes)*	3. Total rainfall during storm event *(in inches)*	4. Number of hours between beginning of storm measured and end of previous measurable rain event	5. Maximum flow rate during rain event *(gallons/minute or specify units)*	6. Total flow from rain event *(gallons or specify units)*
9/10/2014	380	1.18	120	0.27 cfs	0.095 ac-ft
3/25/2015	660	0.18	48	0.00 cfs	0.001 ac-ft
3/15/2016	855	0.74	48	0.10 cfs	0.031 ac-ft
3/1/2017	93	0.56	138	0.02 cfs	0.014 ac-ft
5/10/2017	750	0.78	201	0.15 cfs	0.050 ac-ft
				(Flows are for Outfall 002)	(Volumes are for Outfall 002)

7. Provide a description of the method of flow measurement or estimate.

Calculation: Q = CIA, where C=(%impervious*0.85 factor)+(%pervious*0.2 factor), I= rainfall in feet/hour, A= area in square feet and then converted to corresponding flow rates.

Continued from the Front

Part C - List each pollutant shown in Table 2F-2, 2F-3, and 2F-4 that you know or have reason to believe is present. See the instructions for additional details and requirements. Complete one table for each outfall.

Pollutant and CAS Number *(if available)*	Maximum Values *(include units)*		Average Values *(include units)*		Number of Storm Events Sampled	Sources of Pollutants
	Grab Sample Taken During First 20 Minutes	Flow-Weighted Composite	Grab Sample Taken During First 20 Minutes	Flow-Weighted Composite		
See Attachments 2F-VII - Outfall 002, 2F-VII - Outfall 003, and 2F-VII Outfall 004 for sampling data						

Part D – Provide data for the storm event(s) which resulted in the maximum values for the flow weighted composite sample.

1. Date of Storm Event	2. Duration of Storm Event *(in minutes)*	3. Total rainfall during storm event *(in inches)*	4. Number of hours between beginning of storm measured and end of previous measurable rain event	5. Maximum flow rate during rain event *(gallons/minute or specify units)*	6. Total flow from rain event *(gallons or specify units)*
9/10/2014	380	1.18	120	3.81 cfs	0.247 ac-ft
3/25/2015	660	0.18	48	0.00 cfs	0.003 ac-ft
3/15/2016	855	0.74	48	1.78 cfs	0.121 ac-ft
3/1/2017	93	0.56	138	0.68 cfs	0.054 ac-ft
5/10/2017	750	0.78	201	2.42 cfs	0.161 ac-ft
				(Flows are for Outfall 003)	(Volumes are for Outfall 003)

7. Provide a description of the method of flow measurement or estimate.

Calculation: Q = CIA, where C=(%impervious*0.85 factor)+(%pervious*0.2 factor), I= rainfall in feet/hour, A= area in square feet and then converted to corresponding flow rates.

Continued from the Front

Part C - List each pollutant shown in Table 2F-2, 2F-3, and 2F-4 that you know or have reason to believe is present. See the instructions for additional details and requirements. Complete one table for each outfall.

Pollutant and CAS Number *(if available)*	Maximum Values *(include units)*		Average Values *(include units)*		Number of Storm Events Sampled	Sources of Pollutants
	Grab Sample Taken During First 20 Minutes	Flow-Weighted Composite	Grab Sample Taken During First 20 Minutes	Flow-Weighted Composite		

See Attachments 2F-VII - Outfall 002, 2F-VII - Outfall 003, and 2F-VII Outfall 004 for sampling data

Part D – Provide data for the storm event(s) which resulted in the maximum values for the flow weighted composite sample.

1. Date of Storm Event	2. Duration of Storm Event *(in minutes)*	3. Total rainfall during storm event *(in inches)*	4. Number of hours between beginning of storm measured and end of previous measurable rain event	5. Maximum flow rate during rain event *(gallons/minute or specify units)*	6. Total flow from rain event *(gallons or specify units)*
9/10/2014	380	1.18	120	16.67 cfs	1.455 ac-ft
3/25/2015	660	0.18	48	0.03 cfs	0.050 ac-ft
3/15/2016	855	0.74	48	8.63 cfs	0.736 ac-ft
3/1/2017	93	0.56	138	4.03 cfs	0.354 ac-ft
5/10/2017	750	0.78	201	11.22 cfs	0.959 ac-ft
				(Flows are for Outfall 004)	(Volumes are for Outfall 004)

7. Provide a description of the method of flow measurement or estimate.

Calculation: Q = CIA, where C=(%impervious*0.85 factor)+(%pervious*0.2 factor), I= rainfall in feet/hour, A= area in square feet and then converted to corresponding flow rates.

Table 2F-2

Conventional and Nonconventional Pollutants

Bromide
Chlorine, Total Residual
Color
Fecal Coliform
Fluoride
Nitrate-Nitrite
Nitrogen, Total Organic
Oil and Grease
Phosphorus, Total
Radioactivity
Sulfate
Sulfite
Surfactants
Aluminum, Total
Barium, Total
Boron, Total
Cobalt Total
Iron, Total
Magnesium, Total
Molybdenum, Total
Manganese, Total
Tin, Total
Titanium, Total

*Table is included as answer to Form 2F, Part VII.E. Highlighted compounds are substances or components of substances which are currently used or manufactured as an intermediate or final product or byproduct at 3M Cordova.

Table 2F-3

Toxic Pollutants

Toxic Pollutants and Total Phenol

Antimony, Total
Arsenic, Total
Beryllium, Total
Cadmium, Total
Chromium, Total
Copper, Total
Lead, Total
Mercury, Total
Nickel, Total
Selenium, Total
Silver, Total
Thallium, Total
Zinc, Total
Cyanide, Total
Phenols, Total

GC/MS Fraction Volatiles Compounds

Acrolein
Acrylonitrile
Benzene
Bromoform
Carbon Tetrachloride
Chlorobenzene
Chlorodibromomethane
Chloroethane
2-Chloroethylvinyl Ether
Chloroform
Dichlorobromomethane
1,1-Dichloroethane
1,2-Dichloroethane
1,1-Dichloroethylene
1,2-Dichloropropane
1.3-Dichloropropylene
Ethylbenzene
Methyl Bromide
Methyl Chloride
Methylene Chloride
1,1,2,2,-Tetrachloroethane
Tetrachloroethylene
Toluene
1,2-Trans-Dichloroethylene
1,1,1-Trichloroethane
1,1,2-Trichloroethane
Trichloroethylene
Vinyl Chloride

Acid Compounds

2-Chlorophenol
2,4-Dichlorophenol
2,4-Dimethylphenol
4,6-Dinitro-O-Cresol
2,4-Dinitrophenol
2-Nitrophenol
4-Nitrophenol
p-Chloro-M-Cresol
Pentachlorophenol
Phenol
2,4,6-Trichlorophenol
2-methyl-4,6 dinitrophenol

Base/Neutral

Acenaphthene
Acenaphthylene
Anthracene
Benzidine
Benzo(a)anthracene
Benzo(a)pyrene
3,4-Benzofluoranthene
Benzo(ghi)perylene
Benzo(k)fluoranthene
Bis(2-chloroethoxy)methane
Bis(2-chloroethyl)ether
Bis(2-chloroisopropyl)ether
Bis(2-ethylyhexyl)phthalate
4-Bromophenyl Phenyl Ether
Butylbenzyl Phthalate
2-Chloronaphthalene
4-Chlorophenyl Phenyl Ether
Chrysene
Dibenzo(a,h)anthracene
1,2-Dichlorobenzene
1,3-Dichlorobenzene
1,4-Dichlorobenzene
3,3'-Dichlorobenzidine
Diethyl Phthalate
Dimethyl Phthalate
Di-N-Butyl Phthalate
2,4-Dinitrotoluene
2,6-Dinitrotoluene
Di-N-Octyphthalate
1,2-Diphenylhydrazine (as Azobenzene)
Fluroranthene
Fluorene
Hexachlorobenzene
Hexachlorobutadiene
Hexachloroethane
Indeno(1,2,3-cd)pyrene
Isophorone
Napthalene
Nitrobenzene
N-Nitrosodimethylamine
N-Nitrosodi-N-Propylamine
N-Nitrosodiphenylamine
Phenanthrene
Pyrene
1,2,4-Trichlorobenzene

Pesticides

Aldrin
Alpha-BHC
Beta-BHC
Gamma-BHC
Delta-BHC
Chlordane
4,4'-DDT
4,4'-DDE
4,4'-DDD
Dieldrin
Alpha-Endosulfan
Beta-Endosulfan
Endosulfan Sulfate
Endrin
Endrin Aldehyde
Heptachlor
Heptachlor Epoxide
PCB-1242
PCB-1254
PCB-1221
PCB-1232
PCB-1248
PGB-1260
PCB-1016
Toxaphene

*Table is included as answer to Form 2F, Part VII.E. Highlighted compounds are substances or components of substances which are currently used or manufactured as an intermediate or final product or byproduct at 3M Cordova.

Table 2F-4

Hazardous Substances

Toxic Pollutant

Asbestos

Hazardous Substances

Acetaldehyde
Allyl alcohol
Allyl chloride
Amyl acetate
Aniline
Benzonitrile
Benzyl chloride
Butyl acetate
Butylamine
Carbaryl
Carbofuran
Carbon disulfide
Chlorpyrifos
Coumaphos

Cresol
Crotonaldehyde

Cyclohexane
2,4-D (2,4-Dichlorophenoxyacetic acid)
Diazinon
Dicamba
Dichlobenil
Dichlone
2,2-Dichloropropionic acid
Dichlorvos
Diethyl amine
Dimethyl amine

Dinitrobenzene
Diquat
Disulfoton
Diuron
Epichlorohydrin
Ethion
Ethylene diamine
Ethylene dibromide
Formaldehyde
Furfural
Guthion
Isoprene
Isopropanolamine
Kelthane

Kepone
Malathion

Mercaptodimethur
Methoxychlor

Methyl mercaptan
Methyl methacrylate
Methyl parathion
Mevinphos
Mexacarbate
Monoethyl amine
Monomethyl amine
Naled

Napthenic acid
Nitrotoluene
Parathion
Phenolsulfonate
Phosgene
Propargite
Propylene oxide
Pyrethrins
Quinoline
Resorcinol
Stronthium
Strychnine
Styrene
2,4,5-T (2,4,5-Trichlorophenoxyacetic acid)
TDE (Tetrachlorodiphenyl ethane)
2,4,5-TP [2-(2,4,5-Trichlorophenoxy) propanoic acid]
Trichlorofan
Triethylamine

Trimethylamine
Uranium
Vanadium
Vinyl acetate
Xylene
Xylenol
Zirconium

*Table is included as answer to Form 2F, Part VII.E. Highlighted compounds are substances or components of substances which are currently used or manufactured as an intermediate or final product or byproduct at 3M Cordova.

Attachment 2F-III

3M Cordova Site Drainage Maps

Attached at the end of the application:

CORD-888-C-001, Property Plot Plan
Property layout showing facility, property line and easement information.
Size: 21.5 x 32

CORD-888-C-911, Main Plant Area – Site Drainage Area Map A
Watershed information for the main plant site.
Size: 21.5 x 32

CORD-888-C-915, Main Plant Area – Site Drainage Area Map B
Watershed information for the main plant site.
Size: 21.5 x 32

CORD-888-C-916, Well Field Area – Site Drainage Map
Watershed information for the well field area.
Size: 21.5 x 32

Attachment 2F-IVB-1

Onsite Storage, Handling and Disposal of Significant Materials

3M Cordova

Lawn Maintenance Chemicals

Pesticides and herbicides are predominantly applied on the lawn areas of the manufacturing sections of the facility property. Herbicides are used on some farm sections of the facility property.

Hazardous Wastes

Hazardous wastes generated during the manufacturing process are stored in 55-gallon drums and Intermediate Bulk Containers (IBCs) within facility buildings. The 55-gallon drums and IBCs are stored outside on a concrete pad with diked containment and a control system. Stormwater collected in the diked areas is inspected prior to discharge. Hazardous waste is stored at these sites until removed from the facility for incineration, recycling, reclamation, or disposal.

Railcar Loading/Unloading Areas

All rail cars are off-loaded from the top to reduce the potential for spills. Several rail car loading/unloading areas are located throughout the plant site.

Truck Trailer Loading/Unloading Areas

Any materials received by truck trailer are unloaded at a loading/unloading area; most of these areas have confined concrete protection to prevent spills and pollution on the plant site. Several truck trailer loading/unloading areas are located throughout the plant site.

Product and Raw Material Drum Storage Areas

Drums and IBCs are located in holding areas throughout the plant. Raw materials are packaged in these containers and are placed adjacent to process areas until removed or disposed of properly. Full drums and IBCs are stored on concrete pads.

Sludge Incorporation Areas

Sludge incorporation areas (SIAs) are located in non-process areas of the plant property. These areas were used until 1999 for disposal of non-toxic sludge with bases of iron oxide and aerobic sludge. The affected areas were Sub-watershed E and Sub-watershed D at the junction of the roadway encompassing the SIAs and Highway 84. All storm water from the SIAs is absorbed into the ground.

All sludge produced by the wastewater treatment process (organic, inorganic, and nickel/fluoride) is dewatered on-site then shipped to an off-site landfill.

Attachment 2F-IVB-2

Summary of Bulk Storage 3M Cordova

Material	CAS Number	Material	CAS Number
Calcium Chloride	10043-52-4	Methacrylic Acid	79-41-4
2-EHA	103-11-7	BPA	80-05-7
Acetic Anhydride	108-24-7	Fuel 1 (gas)	8006-61-9
Toluene	108-88-3	Isobutyric Anhydride (Butyric anhydride)	97-72-3
Propionic Anhydride	123-62-6	50% KOH	Mixture
2-Octanol	123-96-6	Acrylate Polymer Solution	Mixture
Potassium Hydroxide	1310-58-3	Alkalation salt waste	Mixture
Xylene	1330-20-7	C3F8 Cell Run High Boilers	Mixture
M-B-Alcohol	137-32-6	Caustic Solution	Mixture
Ethyl Acetate	141-78-6	Crude IOA	Mixture
Heptane	142-82-5	Diethylene Glycol Dimethyl Ether (diglyme / water)	Mixture
Methyl Perfluorobutyl Ether	163702-08-7	Diglyme/Water from HFE Salt Waste	Mixture
343M Epoxy Resin	25085-99-8	Ethyl Nonafluoro (l-/n-) Butyl Ether	Mixture
Isooctyl acrylate (IOA)	29590-42-9	Ethyl perfluorobutyl ether	Mixture
Perfluoromethane Sulfonyl Fluoride	355-42-0	Formaldehyde (37%)	Mixture
2-Octyl Acrylate	42928-85-8	Fractionated HMI HBs	Mixture
Dimethyl disulfide (DMDS)	624-92-0	Fuel Oil	Mixture
Diethyl Sulfate (DES)	64-67-5	High Solids DS-4 Adhesive	Mixture
Methanol	67-56-1	IOA Solution Polymer	Mixture
Isopropanol (IPA)	67-63-0	M-B-Acrylate	Mixture
Acetone	67-64-1	Methyl Esters	Mixture
Fuel 2 (diesel)	68334-30-5	Nalco 71D5	Mixture
Isooctyl alcohol	68526-83-0	Perfluorochemical Inert Hydride Mixture	Mixture
Fractionated Perfluoro-2-Methyl-3-Pentanone	756-13-8	Perfluorochemical Inert Liquid	Mixture
Perfluoropropane	76-19-7	Perfluorohexane crude fractionation	Mixture
Phosphoric Acid	7664-38-2	Poly(triaryl amine) (PTAA) Fractionated Crude	Mixture
Anhydrous Ammonia	7664-41-7	Repulpable Adhesive	Mixture
Sulfuric Acid	7664-93-9	Stain Release	Mixture
Ferric Chloride	7705-08-0	Unrecovered Diglyme	Mixture
Liquid Nitrogen	7727-37-9	25% Lime slurry	Mixture
Firewater	7732-18-5	DPRA	
Dimethyl Sulphate (DMS)	77-78-1	DTO Mother Liquor	
Liquid Oxygen	7782-44-7	High Solids HPS	
MEK	78-93-3	Hydrofluorobutyroyl Fluoride	
Glacial Acrylic Acid	79-10-7	Low HFP Dimer Crude C6 Ketone	

*There are also intermediate and finished products stored in bulk tanks in addition to the listed materials above.

Attachment 2F-IVC

Description of 3M Cordova Stormwater Control Systems

Structural Control Measures

The structural controls found in the drainage area of **Outfall 002 (A)** include indoor storage of chemicals, containment for loading/unloading areas, indoor unloading, and containment for a drum storage area. The structural controls found in the drainage area of Outfall B include indoor storage of hazardous waste and raw materials and a gated structure that is closed to contain spills or contaminated storm water to allow transfer to the wastewater treatment plant, if necessary. Also, 55 gallon drums containing hazardous waste, which are stored outdoors, are kept on a concrete pad with diked containment and a control system.

Stormwater that collects in the diked area is retained and inspected prior to discharge. The gate to Outfall B is never opened.

The structural controls found in the drainage area of **Outfall 003 (C)** include indoor storage of hazardous waste and raw materials and a gated structure that is closed to contain spills or contaminated stormwater to allow transfer to the wastewater treatment plant, if necessary. The wastewater treatment facility's 4 Equalization tanks have leak detection sumps and the sludge holding basins have concrete containment.

An area for 55 gallon drums, Intermediate Bulk Containers (IBCs), and 250 gallon totes containing hazardous waste, which are stored outdoors, are kept on a concrete pad with diked containment and a control system. Stormwater that collects in the diked area is pumped to the waste treatment plant.

The structural controls found in the drainage area of **Outfall 004 (D)** include indoor storage of hazardous waste and raw materials and a gated structure that is closed to contain spills or contaminated stormwater to allow transfer to the wastewater treatment plant, if necessary. Additionally, Stabilization Pond 2 and Stabilization Pond 3 are surrounded by diked structural controls with a control valve system that contains spills and retains stormwater for inspection prior to discharge. Concrete and concrete/steel containment is provided for above and underground storage tanks. The roof drains of the manufacturing buildings are connected to the wastewater treatment plant, except for the Building 30 roof drains, which are directed to the Outfall 004 stormwater ditch. Paved parking and curbed roadways provide containment and drainage for most bulk loading and unloading areas.

Non-Structural Control Measures

Employee training, preventive maintenance, good housekeeping, pollution prevention, and inspections serve as non-structural control measures for all Outfalls at the 3M Cordova site.

There are several procedures documented in Standard Operating Manuals (SOP's) and Operating Manuals for loading and unloading tank trailers, railcars and the handling of water in secondary containment.

Attachment 2F-IVC

Description of 3M Cordova Stormwater Control Systems

Minimization of Stormwater Contact with Contaminants

The 3M Cordova Plant has taken several steps to minimize the discharge of contaminants in stormwater. Most of the above ground storage tanks are surrounded by diked containment and control systems. The drains from the diked storage areas have valves that can be opened and closed manually. The valves are closed in order to retain the stormwater for inspection prior to discharge. The Building 20 tank farm dikes, waste tank dikes, and loading/unloading areas feed to either the chemical sewer or Outfall 004 according to test results. The West (new) above ground tank farm dikes Building 3 drains to the waste treatment plant. The drainage from the North above ground farm dikes can be diverted to either the wastewater treatment plant or the storm sewer (after inspection and testing). Stormwater runoff from the manufacturing buildings flows into the wastewater treatment plant. Stormwater sent to the wastewater treatment plant passes through a secondary treatment (biological) system to remove contaminates. Stormwater sent to the storm ditches flows through concrete piping to the stormwater ditches. The stormwater ditches terminate in concrete structures with valves and piping opening to the Mississippi River. The valves are kept closed at all times except to release stormwater to the river after inspection and testing. The plant supervisors record the opening and closing of these valves and the log sheets are kept for reference. The water in the ditches can be pumped and trucked to the wastewater treatment plant, if contaminated. This provides a second checkpoint for stormwater prior to discharge into the Mississippi River.

All storage tanks are constructed of materials compatible with the tank contents, and most above ground storage tanks have secondary containment with containment volume greater than the volume of the largest tank contained plus the 10-year, 24-hour storm. All underground storage tanks in use are coated and equipped with cathodic protection. Tanks are tested and inspected periodically.
Many storm drains along the roadways are protected by curbs and gates designed to prevent spills from getting into the storm sewer ditches. Additionally, all storm drains onsite are fed into outlet pipes that have closed valves to prevent spills from getting into the waterway. Containment in excess of the roadway containment is provided in sub-watersheds C & D that contains the plant site.

All pipe supports have been properly designed to minimize abrasion and corrosion and to allow for expansion and contraction. Above ground pipelines and valves are inspected on a scheduled basis. Containing and cleaning up spills is our highest priority to minimize contaminants discharged to the storm drains. The spill containment, cleanup, notification, and reporting procedures for the 3M Cordova Plant can be found in the 3M Emergency Response "Red Book" SOP's. The location and usage of cleanup equipment can be found in the SPCC Plan.

Attachment 2F-IVC

Description of 3M Cordova Stormwater Control Systems

STORMWATER MONITORING

IEPA NPDES Permit No. IL0003140, Special Condition 11 requires storm water monitoring for Outfalls 002, 003, and 004 (outfalls A, C, and D). The storm water monitoring must be conducted once per quarter for total iron. All other parameters must be conducted on a yearly basis, and the results submitted to the IEPA on the annual Discharge Monitoring Report.

Attachment 2F-VI

Significant Leaks or Spills

Date	Report Number	Short summary and remediation	Chemical	Amount	Pollutants discharged to river: Yes	Pollutants discharged to river: No	Corrective Action(s)
1/4/2014	INC-49132	Rapid mix pit influent box on waste water pretreatment tank overflowed to the ground around the tank. Flow to the system was immediately stopped. Spilled material and the area were cleaned up and disposed of per plant procedures. No spilled material reached the storm drains.	pre-treatment wastewater (pH=12, organics < 0.5%)	50 gals		X	Root cause was misdirected flow due to lime buildup plugging the underflow weir and overflow ice buildup due to extreme weather conditions. The influent box was cleaned to remove the pluggage and buildup.
1/20/2014	INC-49705	Driver pulled a tank trailer away while connected to the glycol system spilling glycol into the containment and on the ground. Spilled material and the area were cleaned up and disposed of per plant procedures.	ethylene glycol (50% in water)	20 gals		X	Root cause was operator error (hazard recognition) not completing trailer inspection to see that glycol system was connected. Signage was fabricated to hang at the trailer air brakes after connecting to glycol system to warn the drivers prior to moving the tanker.
6/22/2014	INC-55862	Material splashed out of the manway on top of a tank trailer to the pavement below. This occurred at the end of the transfer from a process vessel. The spilled material was contained. No spilled material reached outfall 004. The spilled material and the area were cleaned up and disposed of per plant procedures.	Polyurethane resin in heptane, xylene, and IPA	335 gals		X	Root cause was hazard recognition and situation not covered in procedures. Administrative procedures were implemented to ensure 100% attendance during loading so that the transfer line could be closed immediately upon the transfer line going empty. Additionally, a project has been initiated to change the loading process to pump this low viscosity material rather than using line nitrogen pressure.
7/11/2014	INC-56673	During transit, a tote tank tipped off the forktruck forks and fell to the ground spilling the contents. The spilled material was contained. The spilled material and the area were cleaned up and disposed of per plant procedures.	Ferric Chloride (38.5% in water)	200 gals		X	Root cause was hazard recognition and driving too fast while turning onto uneven road conditions. In addition, this style tote has a fork configuration to prevent tipping, but forks were not placed per this configuration. The safe fork configuration for these totes and hazard recognition were reviewed by the supervisor with all the material handlers. Additionally, a bulk storage tank for this material has since been installed eliminating the need to transport ferric chloride totes to this area.

Attachment 2F-VI

Significant Leaks or Spills

Date	Report Number	Short summary and remediation	Chemical	Amount	Pollutants discharged to river: Yes	Pollutants discharged to river: No	Corrective Action(s)
9/21/2014	INC-59823	The chemical sewer to the wastewater treatment plant backed up and wastewater overflowed the lift station and onto the pavement. The spill was contained, storm water sewer isolated, and flows reduced to stop the spill from the chemical sewer. The spilled material and water to clean the area was removed by vacuum truck, and transported to the wastewater treatment plant influent.	Wastewater (~99.5% water, pH=10.6, and COD of 550 mg/l)	200 gals		X	Root cause was inadequate maintenance. The screw pumps for the lift station were repaired and adequate pump rate verified.
9/27/2015	INC-79588	Plugged chemical sewer resulted in wastewater overflow to the pavement. Some material entered the storm sewer. Isolated the spill and the storm sewer with sandbags. Opened storm sewer manholes leading to south ditch (to outfall 004) and isolated with sandbags to prevent flow to the ditch. Contractor assisted in cleanout activities including flushing and vacuum of isolated storm sewer and disposed through wastewater treatment.	Wastewater (~99% water, ~1% inorg, ~0.5% organic) (pH=11)	50 gals		X	Root Cause: Alarms/training inadequate. The sewer is equipped with a high level alarm light system. An audible alarm has been added. Opertor training was conducted on the alarm system. System training was also posted at the alarm light. Project initiated to improve gate seal on storm sewer isolation curb for mitigation.
2/14/2015	INC-66993	Overflowed methanol to the pavement during trailer loading activity at Bldg 16. Some material entered the storm sewer. The loading activity was stopped and storm sewer isolated. The emergency squad responded, opening storm manholes leading to the south ditch and isolating storm sewer from the ditch using sandbags. An on-site contractor excavated to remove snow and ice at the culvert into the ditch. An on-site jetting contractor vacuumed out the storm sewer line and free liquid at the culvert to the ditch. All liquid, snow, and ice was treated through wastewater treatment. The storm sewer was flushed to a vacuum truck and sampled until methanol not detected by GC analysis. The south ditch valve to outfall 004 was locked closed. In the March melt, the liquid was sampled and GC analyzed to ensure no methanol detected before discharging to the river.	Methanol	500 gals		X	Root Cause: Level detection device design issue. Project initiated to improve level detection. 100% attendance requirement implemented for all trailer loading activities at Bldg 22 and Bldg 16 until spill containment installed. A $475,000 spill containment project has been completed in early 2016 and spill containment at Building 16 is functional and in service.
1/29/2015	INC-66158	Overflowed product to the pavement during trailer loading activity at Bldg 22. The loading activity was stopped. The material flowed into the sewer leading to a diversion pit and was directed to the chemical sewer for wastewater treatment. Adsorbent was applied to residual material on the pavement and disposed of per plant policies.	Monomer	300 gals		X	Root Cause: Operator error - flow meter system used incorrectly. Project initiated to install a high level trip on the fill valve. A $475,000 spill containment project has been completed in early 2016 and spill containment at Building 22 is functional and in service.

Attachment 2F-VI

Significant Leaks or Spills

					Pollutants discharged to river		
Date	Report Number	Short summary and remediation	Chemical	Amount	Yes	No	Corrective Action(s)
8/21/2015	INC-77484	Contracted waste hauler's truck had a hydraulic hose failure while approaching the dumpster, draining hydraulic oil to gravel. Absorbent towels were placed on the hydraulic fluid. The contaminated gravel was excavated and placed in drums for proper disposal per plant procedures.	Hydraulic Oil	20 gals		X	Root Cause: Equipment failure. 3M reviewed the incident with the contractor and contractor will document their PM procedures.
6/25/2015	INC-74145	Contractor was draining pre-treated wastewater with lime fines from their vacuum truck at the dewatering pad and splashed material over the containment curb onto the gravel. The contaminated gravel was put on the wastewater treatment sludge dewatering pad within containment for proper treatment and disposal.	Pre-treated Wastewater (~95% water, 4-5% lime, ~0.5% organics)	20 gals		X	Root Cause: Inadequate hazard recognition; draining too close to containment curb. Reviewed work area constraints with the contractors. The preventive maintenance procedure was updated to include appropriate area, away from the curb, for draining.
2/4/2015	INC-66466	An effluent line in an open channel mix tank in the wastewater pretreatment area plugged causing high level which then spilled over the sides of the tank and on to gravel. The gravel with liquid was vacuumed up by the on-site jetting contractor. Contaminated gravel was shoveled into drums. All material was transported to the sludge dewatering system in wastewater treatment for proper treatment and disposal.	Pre-treated Wastewater (~95% water, 4-5% lime, ~0.5% organics)	50 gals		X	Root Cause: Equipment design and plugged effluent. Implemented more frequent cleaning of the effluent line from this mix tank. Installed a high level alarm and a high high level interlock to stop influent flow on high mix tank level.
9/22/2016	INC-100240	TT4139 was being loaded with HPS from Storage Tank 44. Upon approaching the loading area, an operator discovered material had come out of the doorway of Building 21. Operator immediately called his Crew Leader and Supervisor. Transfer was stopped and valves were closed. It was discovered that material had oozed out of the side of Building 21 and into the gravel. Employees were called to the area to assist in the cleanup efforts. Oil Dry was used to soak up material on the North pad and was scooped into drums for disposal. A pump was set up to transfer the HPS that was on the floor of Building 21 into drums. The HPS in the gravel was also scooped into drums for disposal.	MC-0957	8200 pounds		X	Root Cause: Chemical Sewer Plugged blocking flow to secondary containment. Solid sewer covers blocking visual inspection. Clean internal chemical sewer and verify clear path to secondary containment and replace solid grating with open grating to allow for visual inspection.

Attachment 2F-VI

Significant Leaks or Spills

Date	Report Number	Short summary and remediation	Chemical	Amount	Pollutants discharged to river: Yes	Pollutants discharged to river: No	Corrective Action(s)
9/8/2016	INC-99314	The Primary Settler in Waste Water Treatment overflowed due to torrential rain and a pump failure. All waste material was contained in the secondary containment on the concrete area around the settler. No waste water made it to the gravel area or outside the concrete containment area around the settler. The electrician was contacted to get pumps running and a contractor was contacted to assist in staging pumps to manage the overflowed waste water. Portable flight pumps being used to pump spilled material to EQ tank.	WWT Influent - Internals	500 gallons		X	Root Cause: During an extreme rain event, the normal pumping path could not handle flow. Emergency Pump failure. See PM: MPM0518-01, Monthly Primary Settler Pump Check. Administrative control to improve system to help ensure emergency pump is functional during large rain events.
8/5/2016	INC-97413	While performing PMs, the WTP operator found material dripping from the Lift Station G discharge line to No. 1 Organic EQ. The line was isolated and flow diverted to Organic EQ No. 2. A plastic tote bin was placed under the drip to capture and control the release. Area access was taped off. Saturated insulation is being removed and disposed of to allow assessment and repair of the line. Saturated gravel was removed and properly disposed of per plant procedures.	WWT Influent - Internals	10 gallons		X	Root Cause: Piping Failure - The carbon steel line was original install and had failed over time Both lines to the EQ tanks were replaced, and they are now included in the MI inspections for the area. Acid feed will be moved from Lift Station G to the 6 inch flume in early 2017, as soon as a new safety shower is installed in that area (capital project underway)
7/14/2016	INC-96035	While contractor was cleaning the Internals chemical sewer it became 100% blocked and backed up spilling from the containment. A vac truck immediately began controlling the flow from the buildings until the line could be unplugged. The spill was cleaned up and properly disposed of per plant procedures.	Wastewater (~98% water, <1% inorg, <1% organic)	20 gallons		X	Root Cause: Chemical Sewer Plugged blocking flow Contractor cleared blockage and flow re-established
2/18/2016	INC-87481	A contractor was cleaning a sulfuric acid tank in WTP, the tank had been emptied, neutralized, and rinsed to a vacuum truck. A drain on the vacuum truck knock out pot had a fitting fail releasing some of the water/acid mix. The truck operator placed a container under the leak to capture material, but an estimate 5 - 10 gallons went to the gravel. Some of the material entered into a storm drain; the contractor placed poly bags at the drain, and made a dirt dike to stop any additional flow into the drain. The material in the storm sewer valve box was tested and the pH reading was 7 - 8 s.u. All free liquid and contaminated soil were removed and properly disposed of per plant procedures.	water/acid mix pH 7-8 s.u.	10 gallons		X	Root Cause: Equipment Failure Improved PM by contractor. Contractor reviewed their inspection and PM procedures with 3M. The PM and inspection frequency is good, however this drain was missed on the inspection. These drains will be added to their PM list to prevent future failures.

Attachment 2F-VI

Significant Leaks or Spills

Date	Report Number	Short summary and remediation	Chemical	Amount	Pollutants discharged to river: Yes	Pollutants discharged to river: No	Corrective Action(s)
6/30/2016	INC-95192	Waste Treatment personnel noticed that area around the pump filter containment coming out of the Mag EQ tank and a portable transfer pump being used to empty the tank had material that had spilled into the surrounding gravel around the pump and filters. It was determined that 20 gallons of diluted alkylation salts and water were spilled to the gravel. The area was cleaned up, the contaminated gravel was dug up and disposed of in the appropriate containers and waste stream.	7100 HFE Salts	20 gallons		X	Root Cause: Secondary Containment overflowed during rain event The filter pot secondary containment drain will be tied into the drain line from the Mag Eq Salt Tank. Giving the containment a way to be drain when needed
1/13/2017	INC-106289	A Utilities Operator working at the Mag EQ tank noticed a frozen salt build up on the drain valve of the tank and thought that the line may have frozen. The operator notified his supervisor, and the area was reviewed. The salts build up was found to be coming from around the exterior of the line. After additional review, additional dry salts and a small amount of liquid were found on the north side of the tank. The material is being removed, and the tank emptied for more investigation and repair.	HFE Salts and Water	100 gallons		X	Root Cause was tear in tank liner. Liner repaired and tank back in service. Spill Contained. Material cleaned up and properly disposed of per plant procedures.
2/21/2017	INC-108501	An MCT truck driver notified the guard at the front desk that he had spilled diesel fuel in lot 3. The guard notified the Plant Supervisor. The driver stated that while adjusting the rear tandems on his trailer, he had to jerk the rig back and forth. After moving the tandems, he noticed that his fuel tank cap was loose allowing fuel to spill onto the ground. Approximately one gallon of fuel had spilled onto the concrete surface of lot 3. Oil dry was applied and no material reached a storm sewer or gravel. The spill was cleaned up and properly disposed of. Pictures were taken, a driver statement was requested, contact calls were made and this report was entered.	Diesel Fuel	1 gallon		X	Root Cause was fuel cap loose and fuel allowed to spill when adjusting rear tandoms on trailer. Spill Contained. Material cleaned up and properly disposed of per plant procedures.
4/5/2017	INC-111419	It was reported that milky looking water had been seen around the Bisphenol silo. It had been raining very heavily most of the day and approximately 5-10 pounds of fines had gotten washed down the side of the silo from the vent on top. Sewer was diked with sandbags and a vacuum truck brought in to suck up all contaminated water. Dike was left in place and the vacuum truck on call if needed for further clean up due to ongoing heavy rainfall. Contacts were made and report filed	Bisphenol fines	5 pounds		X	Root cause was build up of material from conservation vent. Filters cleaned. Spill Contained. Material cleaned up and properly disposed of per plant procedures.

Attachment 2F-VII
Outfall 002

	Pollutant	Believed Present	Max Values		Avg Values		No. Storm Events Sampled	Units
			Initial Grab	Flow-Weighted Composite	Initial Grab	Flow-Weighted Composite		
Part A	Required Parameters							
	O&G	NA	<5.2	<2.5	NA	NA	4	mg/L
	BOD5	NA	28	34	NA	NA	1	mg/L
	COD	NA	72	82	36	47	2	mg/L
	TSS	NA	19	31	9.5	16	2	mg/L
	Total Nitrogen	NA	4.25	4.00	3.05	2.48	4	mg/L
	Total Phosphorus	NA	0.12	0.29	0.030	0.073	4	mg/L
	pH	NA	7.60	7.69	7.60-6.77	7.69-6.79	3	SU
Part B	Pollutants included in facility effluent guidelines, or listed in NPDES permit for process wastewater (i.e. Outfalls 001 and A01)							
	Ammonia	NA	0.44	0.40	0.26	0.17	4	mg/L
	Barium	NA	15	29	8.9	10.7	4	ug/L
	Chromium	NA	1.1	4.5	0.45	1.2	4	ug/L
	Cobalt	NA	6.2	6.1	2.5	3.1	4	ug/L
	Copper	NA	9.3	11	5.2	4.7	4	ug/L
	Cyanide, Total	NA	0.002	0.011	0.00067	0.0033	3	mg/L
	Fecal Coliform	NA	4600	5700	2314	2859	2	CFU/100 mL
	Fluoride	NA	2.02	1.49	0.518	0.385	4	mg/L
	Formaldehyde	NA	<100	<100	NA	NA	1	ug/L
	Iron, Total	NA	1600	3500	839	1344	4	ug/L
	Lead	NA	4.1	13	2.2	4.1	4	ug/L
	Manganese	NA	34	120	19	37	4	ug/L
	Mercury	NA	<0.20	0	NA	0	4	ug/L
	Nickel	NA	24	30	7.2	8.6	4	ug/L
	Sulfate	NA	12	12	6.5	6.9	4	mg/L
	Zinc	NA	320	300	156	142	4	ug/L
	PFCs							
	(PFOA) Perfluoroctanoic Acid	NA	0.0853	0.0797	NA	NA	1	ng/L
	(PFBA) Perfluorobutanoic Acid	NA	4.22	4.25	NA	NA	1	ng/L
	(PFOSA) Perfluorooctanesulfonamide	NA	<0.0250	<0.0250	NA	NA	1	ng/L
	(PFOS) Perfluorooctanesulfonate	NA	0.451	0.35	NA	NA	1	ng/L
	(PFPEeA) Perfluoropentanoic Acid	NA	0.354	0.384	NA	NA	1	ng/L
	(PFHxA) Perfluorohexanoic Acid	NA	0.171	0.175	NA	NA	1	ng/L
	(PFHpA) Perfluoroheptanoic Acid	NA	0.055	0.0529	NA	NA	1	ng/L
	(PFNA) Perfluorononanoic Acid	NA	<0.0250	<0.0250	NA	NA	1	ng/L
	(PFDA) Perfluorodecanoic Acid	NA	<0.0250	<0.0250	NA	NA	1	ng/L
	(PFUnA) Perfluoroundecanoic Acid	NA	<0.0250	<0.0250	NA	NA	1	ng/L
	(PFDoA) Perfluorododecanoic Acid	NA	<0.0500	<0.0500	NA	NA	1	ng/L
	(PFTrA) Perfluorotridecanoic Acid	NA	<0.0500	<0.0500	NA	NA	1	ng/L
	(PFBS) Perfluorobutanesulfonate	NA	0.431	0.503	NA	NA	1	ng/L
	(PFHS) Perfluorohexanesulfonate	NA	0.114	0.117	NA	NA	1	ng/L
	126 Priority Pollutants							
	Acenaphthene	NA	<10.2	<10.5	NA	NA	4	ug/L
	Acrolein	NA	<10.0	<10.0	NA	NA	4	ug/L
	Acrylonitrile	NA	<10.0	<10	NA	NA	4	ug/L
	Benzene	NA	<1.0	<1.0	NA	NA	4	ug/L
	Benzidine	NA	<50.8	<52.6	NA	NA	4	ug/L
	Carbon tetrachloride	NA	<1.0	<1.0	NA	NA	4	ug/L
	Chlorobenzene	NA	<1.0	<1.0	NA	NA	4	ug/L
	1,2,4-trichlorobenzene	NA	<10.2	<10.5	NA	NA	4	ug/L
	Hexachlorobenzene	NA	<10.2	<10.5	NA	NA	4	ug/L
	1,2-dichloroethane	NA	<1.0	<1.0	NA	NA	4	ug/L
	1,1,1-trichloroethane	NA	<1.0	<1.0	NA	NA	4	ug/L
	Hexachloroethane	NA	<10.2	<10.5	NA	NA	4	ug/L
	1,1-dichloroethane	NA	<1.0	<1.0	NA	NA	4	ug/L
	1,1,2-trichloroethane	NA	<1.0	<1.0	NA	NA	4	ug/L
	1,1,2,2-tetrachloroethane	NA	<1.0	<1.0	NA	NA	4	ug/L
	Chloroethane	NA	<4.0	<4.0	NA	NA	4	ug/L
	Bis(2-chloroethyl) ether	NA	<10.2	<10.5	NA	NA	4	ug/L
	2-chloroethylvinyl ether	NA	<10.0	<10.0	NA	NA	4	ug/L
	2-chloronaphthalene	NA	<10.2	<10.5	NA	NA	4	ug/L
	2,4,6-trichlorophenol	NA	<10.2	<10.5	NA	NA	4	ug/L
	Parachlorometa cresol (4-chloro-3-methylphenol)	NA	<10.2	<10.5	NA	NA	4	ug/L
	Chloroform	NA	<1.0	<1.0	NA	NA	4	ug/L
	2-chlorophenol	NA	<10.2	<10.5	NA	NA	4	ug/L
	1,2-dichlorobenzene	NA	<1.0	<1.0	NA	NA	4	ug/L
	1,3-dichlorobenzene	NA	<1.0	<1.0	NA	NA	4	ug/L
	1,4-dichlorobenzene	NA	<1.0	<1.0	NA	NA	4	ug/L

NA - Averages not calculated if all results were below reporting limit, or if only one result reported.

Pollutant	Believed Present	Max Values		Avg Values		No. Storm Events Sampled	Units
		Initial Grab	Flow-Weighted Composite	Initial Grab	Flow-Weighted Composite		
3,3-dichlorobenzidine	NA	<50.8	<52.6	NA	NA	4	ug/L
1,1-dichloroethylene (1,1-dichloroethene)	NA	<1.0	<1.0	NA	NA	4	ug/L
1,2-trans-dichloroethylene (trans-1,2-dichloroethene)	NA	<1.0	<1.0	NA	NA	4	ug/L
2,4-dichlorophenol	NA	<10.2	<10.5	NA	NA	4	ug/L
1,2-dichloropropane	NA	<4.0	<4.0	NA	NA	4	ug/L
1,3-dichloropropylene (cis- and trans-1,3-dichloropropene)	NA	<4.0	<4.0	NA	NA	4	ug/L
2,4-dimethylphenol	NA	<50.8	<52.6	NA	NA	4	ug/L
2,4-dinitrotoluene	NA	<10.2	<10.5	NA	NA	4	ug/L
2,6-dinitrotoluene	NA	<10.2	<10.5	NA	NA	4	ug/L
1,2-diphenylhydrazine	NA	<10.2	<10.5	NA	NA	4	ug/L
Ethylbenzene	NA	<1.0	<1.0	NA	NA	4	ug/L
Fluoranthene	NA	<10.2	<10.5	NA	NA	4	ug/L
4-chlorophenyl phenyl ether	NA	<10.2	<10.5	NA	NA	4	ug/L
4-bromophenyl phenyl ether	NA	<10.2	<10.5	NA	NA	4	ug/L
Bis(2-chloroisopropyl) ether	NA	<10.2	<10.5	NA	NA	4	ug/L
Bis(2-chloroethoxy) methane	NA	<10.2	<10.5	NA	NA	4	ug/L
Methylene chloride (Dichloromethane)	NA	<4.0	<4.0	NA	NA	4	ug/L
Methyl chloride (Chloromethane)	NA	<4.0	<4.0	NA	NA	4	ug/L
Methyl bromide (Bromomethane)	NA	1.2	1.1	0.3	0.275	4	ug/L
Bromoform	NA	<4.0	<4.0	NA	NA	4	ug/L
Dichlorobromomethane (Bromodichloromethane)	NA	<1.0	<1.0	NA	NA	4	ug/L
Chlorodibromomethane (Dibromochloromethane)	NA	<1.0	<1.0	NA	NA	4	ug/L
Hexachlorobutadiene	NA	<10.2	<10.5	NA	NA	4	ug/L
Hexachlorocyclopentadiene	NA	<50.8	<52.6	NA	NA	4	ug/L
Isophorone	NA	<10.2	<10.5	NA	NA	4	ug/L
Naphthalene	NA	<10.2	<10.5	NA	NA	4	ug/L
Nitrobenzene	NA	<10.2	<10.5	NA	NA	4	ug/L
2-nitrophenol	NA	<10.2	<10.5	NA	NA	4	ug/L
4-nitrophenol	NA	<10.2	<10.5	NA	NA	4	ug/L
2,4-dinitrophenol	NA	<10.2	<10.5	NA	NA	4	ug/L
4,6-dinitro-o-cresol (2-Methyl-4,6-dinitrophenol)	NA	<10.2	<10.5	NA	NA	4	ug/L
N-nitrosodimethylamine	NA	<10.2	<10.5	NA	NA	4	ug/L
N-nitrosodiphenylamine	NA	<10.2	<10.5	NA	NA	4	ug/L
N-nitrosodi-n-propylamine	NA	<10.2	<10.5	NA	NA	4	ug/L
Pentachlorophenol	NA	<20.3	<21.1	NA	NA	4	ug/L
Phenol	NA	<10.2	<10.5	NA	NA	4	ug/L
Bis(2-ethylhexyl) phthalate	NA	3.5	<10.5	0.88	NA	4	ug/L
Butyl benzyl phthalate	NA	<10.2	<10.5	NA	NA	4	ug/L
Di-n-Butyl Phthalate	NA	<10.2	<10.5	NA	NA	4	ug/L
Di-n-octyl phthalate	NA	<10.2	<10.5	NA	NA	4	ug/L
Diethyl Phthalate	NA	<10.2	<10.5	NA	NA	4	ug/L
Dimethyl phthalate	NA	<10.2	<10.5	NA	NA	4	ug/L
Benzo(a) anthracene	NA	<10.2	<10.5	NA	NA	4	ug/L
Benzo(a) pyrene	NA	<10.2	<10.5	NA	NA	4	ug/L
Benzo(b) fluoranthene (3,4-Benzofluoranthene)	NA	<10.2	<10.5	NA	NA	4	ug/L
Benzo(k) fluoranthene	NA	<10.2	<10.5	NA	NA	4	ug/L
Chrysene	NA	<10.2	<10.5	NA	NA	4	ug/L
Acenaphthylene	NA	<10.2	<10.5	NA	NA	4	ug/L
Anthracene	NA	<10.2	<10.5	NA	NA	4	ug/L
Benzo(ghi) perylene	NA	<10.2	<10.5	NA	NA	4	ug/L
Fluorene	NA	<10.2	<10.5	NA	NA	4	ug/L
Phenanthrene	NA	<10.2	<10.5	NA	NA	4	ug/L
Dibenzo(a,h) anthracene	NA	<10.2	<10.5	NA	NA	4	ug/L
Indeno (1,2,3-cd) pyrene	NA	<10.2	<10.5	NA	NA	4	ug/L
Pyrene	NA	<10.2	<10.5	NA	NA	4	ug/L
Tetrachloroethylene (Tetrachlorethene)	NA	<1.0	<1.0	NA	NA	4	ug/L
Toluene	NA	<1.0	<1.0	NA	NA	4	ug/L
Trichloroethylene (Trichlorethene)	NA	<1.0	<1.0	NA	NA	4	ug/L
Vinyl chloride	NA	<1.0	<1.0	NA	NA	4	ug/L
Aldrin	NA	<0.50	<0.50	NA	NA	3	ug/L
Dieldrin	NA	<1.0	<1.0	NA	NA	3	ug/L
Chlordane	NA	<5.0	<5.0	NA	NA	2	ug/L
4,4-DDT	NA	<1.0	<1.0	NA	NA	3	ug/L
4,4-DDE	NA	<1.0	<1.0	NA	NA	3	ug/L
4,4-DDD	NA	<1.0	<1.0	NA	NA	3	ug/L
Alpha-endosulfan (Endosulfan I)	NA	<0.50	<0.50	NA	NA	3	ug/L
Beta-endosulfan (Endosulfan II)	NA	<1.0	<1.0	NA	NA	3	ug/L
Endosulfan sulfate	NA	<1.0	<1.0	NA	NA	3	ug/L

NA - Averages not calculated if all results were below reporting limit, or if only one result reported.

Attachment 2F-VII
Outfall 002

Pollutant	Believed Present	Max Values		Avg Values		No. Storm Events Sampled	Units
		Initial Grab	Flow-Weighted Composite	Initial Grab	Flow-Weighted Composite		
Endrin	NA	<1.0	<1.0	NA	NA	3	ug/L
Endrin aldehyde	NA	<1.0	<1.0	NA	NA	3	ug/L
Heptachlor	NA	<0.50	<0.50	NA	NA	3	ug/L
Heptachlor epoxide	NA	<0.50	<0.50	NA	NA	3	ug/L
Alpha-BHC	NA	<0.50	<0.50	NA	NA	3	ug/L
Beta-BHC	NA	<0.50	<0.50	NA	NA	3	ug/L
Gamma-BHC (Lindane)	NA	<0.50	<0.50	NA	NA	3	ug/L
Delta-BHC	NA	<0.50	<0.50	NA	NA	3	ug/L
PCB-1242 (Arochlor 1242)	NA	<5.0	<5.0	NA	NA	3	ug/L
PCB-1254 (Arochlor 1254)	NA	<10	<10	NA	NA	3	ug/L
PCB-1221 (Arochlor 1221)	NA	<10	<10	NA	NA	3	ug/L
PCB-1232 (Arochlor 1232)	NA	<5.0	<5.0	NA	NA	3	ug/L
PCB-1248 (Arochlor 1248)	NA	<5.0	<5.0	NA	NA	3	ug/L
PCB-1260 (Arochlor 1260)	NA	<10	<10	NA	NA	3	ug/L
PCB-1016 (Arochlor 1016)	NA	<5.0	<5.0	NA	NA	3	ug/L
Toxaphene	NA	<5.0	<5.0	NA	NA	3	ug/L
Antimony	NA	0.59	1.6	0.27	0.4525	4	ug/L
Arsenic	NA	0.46	1.1	0.23	0.4825	4	ug/L
Asbestos	NA	<2.50	<6.9	NA	NA	1	MFL
Beryllium	NA	<5.0	<5.0	NA	NA	4	ug/L
Cadmium	NA	<3.0	<3.0	NA	NA	4	ug/L
Selenium	NA	17	14	4.3	3.5	4	ug/L
Silver	NA	<10.0	0.91	NA	0.2275	4	ug/L
Thallium	NA	<0.27	0.29	NA	0.0725	4	ug/L
2,3,7,8-TCDD	NA	<0.0054	<10	NA	NA	1	ug/L
Part C **Pollutants known or believed to be present (and listed in Tables 2F-2, 2F-3, and 2F-4)**							
Table 2F-2							
Bromide	X	<0.12	<0.12	NA	NA	4	mg/L
Chlorine, Total Residual							
Color	X	60	60	41	43.75	4	Color Unit
Nitrate-Nitrite	X	4.2	2.6	2.4	1.5175	4	mg/L as N
Nitrogen, Total Organic	X	1.1	2.3	0.37	0.76666667	3	mg/L
Radioactivity							
Sulfite							
Surfactants	X	0.12	0.11	0.04	0.03666667	3	mg/L
Aluminum, Total	X	450	1500	178	402.25	4	ug/L
Boron, Total	X	20	26	5.0	6.5	4	ug/L
Magnesium, Total	X	7700	14000	5233	6312.5	4	ug/L
Molybdenum, Total	X	1.4	1.4	0.38	0.405	4	ug/L
Tin, Total	X	38	46	11.8	16.05	4	ug/L
Titanium, Total	X	10	36	4.7	9.8725	4	ug/L
Table 2F-3							
Phenols, Total	X	0.038	0.0049	0.019	0.00245	2	mg/L
Table 2F-4							
Acetaldehyde	X	<200	<200	NA	NA	1	ug/L
Allyl alcohol							
Allyl chloride							
Amyl acetate		<5.0	<5.0	NA	NA	1	ug/L
Aniline	X	<5.0	<5.0	NA	NA	3	ug/L
Benzonitrile							
Benzyl chloride							
Butyl acetate	X						
Butylamine							
Carbaryl							
Carbofuran							
Carbon disulfide							
Chlorpyrifos							
Coumaphos							
Cresol							
Crotonaldehyde							
Cyclohexane	X	<5.0	<5.0	NA	NA	2	ug/L
2,4-D (2,4-Dichlorophenoxyacetic acid)							
Diazinon							
Dicamba							
Dichlobenil							
Dichlone							
2,2-Dichloropropionic acid							

NA - Averages not calculated if all results were below reporting limit, or if only one result reported.

Attachment 2F-VII
Outfall 002

Pollutant	Believed Present	Max Values		Avg Values		No. Storm Events Sampled	Units
		Initial Grab	Flow-Weighted Composite	Initial Grab	Flow-Weighted Composite		
Dichlorvos							
Diethyl amine	X	<50	<50	NA	NA	1	mg/L
Dimethyl amine							
Dinitrobenzene							
Diquat							
Disulfoton							
Diuron							
Epichlorohydrin	X	<200	<200	NA	NA	1	ug/L
Ethion							
Ethylene diamine							
Ethylene dibromide							
Furfural	X	<10	<10	NA	NA	1	ug/L
Guthion							
Isoprene							
Isopropanolamine							
Kelthane							
Kepone							
Malathion							
Mercaptodimethur							
Methoxychlor		<5.0	<5.0	NA	NA	3	ug/L
Methyl mercaptan	X						
Methyl methacrylate	X	<5.0	<5.0	NA	NA	4	ug/L
Methyl parathion							
Mevinphos							
Mexacarbate							
Monoethyl amine							
Monomethyl amine							
Naled							
Napthenic acid							
Nitrotoluene							
Parathion							
Phenolsulfonate							
Phosgene							
Propargite							
Propylene oxide							
Pyrethrins							
Quinoline	X	<0.043	<0.043	NA	NA	1	ug/L
Resorcinol							
Stronthium							
Strychnine							
Styrene	X	<1.0	<1.0	NA	NA	4	ug/L
2,4,5-T (2,4,5-Trichlorophenoxyacetic acid)							
TDE (Tetrachlorodiphenyl ethane)							
2,4,5-TP [2-(2,4,5-Trichlorophenoxy) propanoic acid]							
Trichlorofan							
Triethylamine	X	<10	<10	NA	NA	1	ug/L
Trimethylamine							
Uranium							
Vanadium	X	1.1	1.8	NA	NA	1	ug/L
Vinyl acetate	X	<10.0	<10.0	NA	NA	5	ug/L
Xylene	X	<1.0	<1.0	NA	NA	4	ug/L
Xylenol							
Zirconium							

NA - Averages not calculated if all results were below reporting limit, or if only one result reported.

Attachment 2F-VII
Outfall 003

	Pollutant	Believed Present	Max Values		Avg Values		No. Storm Events Sampled	Units
			Initial Grab	Flow-Weighted Composite	Initial Grab	Flow-Weighted Composite		
Part A	Required Parameters							
	O&G	NA	<2.5	<2.4	NA	NA	3	mg/L
	BOD5	NA	12	11	10.0	8.85	2	mg/L
	COD	NA	20	33	14	20	2	mg/L
	TSS	NA	320	180	182	112	2	mg/L
	Total Nitrogen	NA	2.85	2.55	1.43	1.92	3	mg/L
	Total Phosphorus	NA	0.28	0.23	0.13	0.10	4	mg/L
	pH	NA	8.57	10.6	8.57-7.93	10.6-7.15	3	SU
Part B	Pollutants included in facility effluent guidelines, or listed in NPDES permit for process wastewater (i.e. Outfalls 001 and A01)							
	Ammonia	NA	0.51	0.66	0.42	0.33	4	mg/L
	Barium	NA	45	44	37	36	4	ug/L
	Chromium	NA	5.3	5.5	4.3	3.5	4	ug/L
	Cobalt	NA	3.3	2.6	1.9	1.2	4	ug/L
	Copper	NA	19	16	11	9.1	4	ug/L
	Cyanide, Total	NA	0.0058	0.0052	0.0036	0.0023	4	mg/L
	Fecal Coliform	NA	5900	5900	5900	NA	1	CFU/100 mL
	Fluoride	NA	9.22	7.08	6.95	5.65	4	mg/L
	Formaldehyde	NA	<100	100	NA	NA	1	ug/L
	Iron, Total	NA	2400	2300	2200	1658	4	ug/L
	Lead	NA	4.2	4	3.0	2.3	4	ug/L
	Manganese	NA	160	140	123	90.9	4	ug/L
	Mercury	NA	<0.044	<0.20	NA	NA	4	ug/L
	Nickel	NA	40	41	32	26	4	ug/L
	Sulfate	NA	26	30	25	27	4	mg/L
	Zinc	NA	140	140	96	77	4	ug/L
	PFCs							
	(PFOA) Perfluoroctanoic Acid	NA	<0.0240	0.0833	NA	NA	1	ng/L
	(PFBA) Perfluorobutanoic Acid	NA	14.6	55.8	NA	NA	1	ng/L
	(PFOSA) Perfluorooctanesulfonamide	NA	<0.0250	<0.0250	NA	NA	1	ng/L
	(PFOS) Perfluorooctanesulfonate	NA	1.49	3.15	NA	NA	1	ng/L
	(PFPEeA) Perfluoropentanoic Acid	NA	0.577	2.21	NA	NA	1	ng/L
	(PFHxA) Perfluorohexanoic Acid	NA	0.0657	0.17	NA	NA	1	ng/L
	(PFHpA) Perfluoroheptanoic Acid	NA	<0.0250	0.0505	NA	NA	1	ng/L
	(PFNA) Perfluorononanoic Acid	NA	<0.0250	0.0534	NA	NA	1	ng/L
	(PFDA) Perfluorodecanoic Acid	NA	0.0397	0.0692	NA	NA	1	ng/L
	(PFUnA) Perfluoroundecanoic Acid	NA	<0.0250	0.026	NA	NA	1	ng/L
	(PFDoA) Perfluorododecanoic Acid	NA	<0.0500	<0.0500	NA	NA	1	ng/L
	(PFTrA) Perfluorotridecanoic Acid	NA	<0.0500	<0.0500	NA	NA	1	ng/L
	(PFBS) Perfluorobutanesulfonate	NA	0.349	1.48	NA	NA	1	ng/L
	(PFHS) Perfluorohexanesulfonate	NA	<0.0250	0.075	NA	NA	1	ng/L
	126 Priority Pollutants							
	Acenaphthene	NA	<5.0	<5.0	NA	NA	4	ug/L
	Acrolein	NA	<10	<30	NA	NA	4	ug/L
	Acrylonitrile	NA	<10	<10	NA	NA	4	ug/L
	Benzene	NA	<1.0	<1.0	NA	NA	4	ug/L
	Benzidine	NA	<26	<26	NA	NA	4	ug/L
	Carbon tetrachloride	NA	<1.0	<1.0	NA	NA	4	ug/L
	Chlorobenzene	NA	<1.0	<1.0	NA	NA	4	ug/L
	1,2,4-trichlorobenzene	NA	<5.0	<5.0	NA	NA	4	ug/L
	Hexachlorobenzene	NA	<5.0	<5.0	NA	NA	4	ug/L
	1,2-dichloroethane	NA	<1.0	<1.0	NA	NA	4	ug/L
	1,1,1-trichloroethane	NA	<1.0	<1.0	NA	NA	4	ug/L
	Hexachloroethane	NA	<5.0	<5.0	NA	NA	4	ug/L
	1,1-dichloroethane	NA	<1.0	<1.0	NA	NA	4	ug/L
	1,1,2-trichloroethane	NA	<1.0	<1.0	NA	NA	4	ug/L
	1,1,2,2-tetrachloroethane	NA	<1.0	<1.0	NA	NA	4	ug/L
	Chloroethane	NA	<1.0	<1.0	NA	NA	4	ug/L
	Bis(2-chloroethyl) ether	NA	<5.0	<5.0	NA	NA	4	ug/L
	2-chloroethylvinyl ether	NA	<1.0	<1.0	NA	NA	4	ug/L
	2-chloronaphthalene	NA	<5.0	<5.0	NA	NA	4	ug/L
	2,4,6-trichlorophenol	NA	<5.0	<5.0	NA	NA	4	ug/L
	Parachlorometa cresol (4-chloro-3-methylphenol)	NA	<5.0	<5.0	NA	NA	4	ug/L
	Chloroform	NA	<1.0	<1.0	NA	NA	4	ug/L
	2-chlorophenol	NA	<6.0	<6.0	NA	NA	4	ug/L
	1,2-dichlorobenzene	NA	<1.0	<1.0	NA	NA	4	ug/L
	1,3-dichlorobenzene	NA	<1.0	<1.0	NA	NA	4	ug/L
	1,4-dichlorobenzene	NA	<1.0	<1.0	NA	NA	4	ug/L

NA - Averages not calculated if all results were below reporting limit, or if only one result reported.

Pollutant	Believed Present	Max Values		Avg Values		No. Storm Events Sampled	Units
		Initial Grab	Flow-Weighted Composite	Initial Grab	Flow-Weighted Composite		
3,3-dichlorobenzidine	NA	<12	<12	NA	NA	4	ug/L
1,1-dichloroethylene (1,1-dichloroethene)	NA	<1.0	<1.0	NA	NA	4	ug/L
1,2-trans-dichloroethylene (trans-1,2-dichloroethene)	NA	<1.0	<1.0	NA	NA	4	ug/L
2,4-dichlorophenol	NA	<5.0	<5.0	NA	NA	4	ug/L
1,2-dichloropropane	NA	<1.0	<1.0	NA	NA	4	ug/L
1,3-dichloropropylene (cis- and trans-1,3-dichloropropene)	NA	<1.0	<1.0	NA	NA	4	ug/L
2,4-dimethylphenol	NA	<5.0	<5.0	NA	NA	4	ug/L
2,4-dinitrotoluene	NA	<5.0	<5.0	NA	NA	4	ug/L
2,6-dinitrotoluene	NA	<5.0	<5.0	NA	NA	4	ug/L
1,2-diphenylhydrazine	NA	<5.0	<5.0	NA	NA	4	ug/L
Ethylbenzene	NA	<1.0	<1.0	NA	NA	4	ug/L
Fluoranthene	NA	<5.0	<5.0	NA	NA	4	ug/L
4-chlorophenyl phenyl ether	NA	<5.0	<5.0	NA	NA	4	ug/L
4-bromophenyl phenyl ether	NA	<5.0	<5.0	NA	NA	4	ug/L
Bis(2-chloroisopropyl) ether	NA	<5.0	<5.0	NA	NA	4	ug/L
Bis(2-chloroethoxy) methane	NA	<5.0	<5.0	NA	NA	4	ug/L
Methylene chloride (Dichloromethane)	NA	<1.0	<5.0	NA	NA	4	ug/L
Methyl chloride (Chloromethane)	NA	<1.0	0.15	NA	0.038	4	ug/L
Methyl bromide (Bromomethane)	NA	1.3	1.2	0.43	0.30	4	ug/L
Bromoform	NA	<1.0	<5.0	NA	NA	4	ug/L
Dichlorobromomethane (Bromodichloromethane)	NA	<1.0	<1.0	NA	NA	4	ug/L
Chlorodibromomethane (Dibromochloromethane)	NA	<1.0	<1.0	NA	NA	4	ug/L
Hexachlorobutadiene	NA	<5.0	<5.0	NA	NA	4	ug/L
Hexachlorocyclopentadiene	NA	<4.0	<5.0	NA	NA	4	ug/L
Isophorone	NA	<5.0	<5.0	NA	NA	4	ug/L
Naphthalene	NA	<5.0	<5.0	NA	NA	4	ug/L
Nitrobenzene	NA	<5.0	<5.0	NA	NA	4	ug/L
2-nitrophenol	NA	<6.7	<6.7	NA	NA	4	ug/L
4-nitrophenol	NA	<6.1	<6.1	NA	NA	4	ug/L
2,4-dinitrophenol	NA	<5.0	<5.0	NA	NA	4	ug/L
4,6-dinitro-o-cresol (2-Methyl-4,6-dinitrophenol)	NA	<10	<10	NA	NA	4	ug/L
N-nitrosodimethylamine	NA	<5.0	<5.0	NA	NA	4	ug/L
N-nitrosodiphenylamine	NA	<5.0	<5.0	NA	NA	4	ug/L
N-nitrosodi-n-propylamine	NA	<5.0	<5.0	NA	NA	4	ug/L
Pentachlorophenol	NA	<10	<10	NA	NA	4	ug/L
Phenol	NA	<5.0	<5.0	NA	NA	4	ug/L
Bis(2-ethylhexyl) phthalate	NA	<3.0	<3.0	NA	NA	4	ug/L
Butyl benzyl phthalate	NA	<5.0	<5.0	NA	NA	4	ug/L
Di-n-Butyl Phthalate	NA	<5.0	<5.0	NA	NA	4	ug/L
Di-n-octyl phthalate	NA	<5.0	<5.0	NA	NA	4	ug/L
Diethyl Phthalate	NA	<5.0	<5.0	NA	NA	4	ug/L
Dimethyl phthalate	NA	<5.0	<5.0	NA	NA	4	ug/L
Benzo(a) anthracene	NA	<5.0	<5.0	NA	NA	4	ug/L
Benzo(a) pyrene	NA	<5.0	<5.0	NA	NA	4	ug/L
Benzo(b) fluoranthene (3,4-Benzofluoranthene)	NA	<5.0	<5.0	NA	NA	4	ug/L
Benzo(k) fluoranthene	NA	<5.0	<5.0	NA	NA	4	ug/L
Chrysene	NA	<5.0	<5.0	NA	NA	4	ug/L
Acenaphthylene	NA	<5.0	<5.0	NA	NA	4	ug/L
Anthracene	NA	<5.0	<5.0	NA	NA	4	ug/L
Benzo(ghi) perylene	NA	<5.0	<5.0	NA	NA	4	ug/L
Fluorene	NA	<5.0	<5.0	NA	NA	4	ug/L
Phenanthrene	NA	<5.0	<5.0	NA	NA	4	ug/L
Dibenzo(a,h) anthracene	NA	<5.0	<5.0	NA	NA	4	ug/L
Indeno (1,2,3-cd) pyrene	NA	<5.0	<5.0	NA	NA	4	ug/L
Pyrene	NA	<5.0	<5.0	NA	NA	4	ug/L
Tetrachloroethylene (Tetrachlorethene)	NA	<1.0	<2.5	NA	NA	4	ug/L
Toluene	NA	<1.0	<1.0	NA	NA	4	ug/L
Trichloroethylene (Trichlorethene)	NA	<1.0	<1.0	NA	NA	4	ug/L
Vinyl chloride	NA	<1.0	<2.5	NA	NA	4	ug/L
Aldrin	NA	<0.50	0.029	NA	0.0073	4	ug/L
Dieldrin	NA	<1.0	<1.0	NA	NA	4	ug/L
Chlordane	NA	<5.0	<5.0	NA	NA	2	ug/L
4,4-DDT	NA	<1.0	<1.0	NA	NA	4	ug/L
4,4-DDE	NA	<1.0	<1.0	NA	NA	4	ug/L
4,4-DDD	NA	<1.0	<1.0	NA	NA	4	ug/L
Alpha-endosulfan (Endosulfan I)	NA	<0.50	<0.50	NA	NA	4	ug/L
Beta-endosulfan (Endosulfan II)	NA	<1.0	0.087	NA	0.022	4	ug/L
Endosulfan sulfate	NA	<1.0	<1.0	NA	NA	4	ug/L

NA - Averages not calculated if all results were below reporting limit, or if only one result reported.

Attachment 2F-VII
Outfall 003

	Pollutant	Believed Present	Max Values		Avg Values		No. Storm Events Sampled	Units
			Initial Grab	Flow-Weighted Composite	Initial Grab	Flow-Weighted Composite		
	Endrin	NA	<1.0	<1.0	NA	NA	4	ug/L
	Endrin aldehyde	NA	<1.0	<1.0	NA	NA	4	ug/L
	Heptachlor	NA	<0.50	<0.50	NA	NA	4	ug/L
	Heptachlor epoxide	NA	<0.50	<0.50	NA	NA	4	ug/L
	Alpha-BHC	NA	<0.50	<0.50	NA	NA	4	ug/L
	Beta-BHC	NA	<0.50	<0.50	NA	NA	4	ug/L
	Gamma-BHC (Lindane)	NA	<0.50	<0.50	NA	NA	4	ug/L
	Delta-BHC	NA	<0.50	2.2	NA	0.55	4	ug/L
	PCB-1242 (Arochlor 1242)	NA	<5.0	<5.0	NA	NA	4	ug/L
	PCB-1254 (Arochlor 1254)	NA	<10	<10	NA	NA	4	ug/L
	PCB-1221 (Arochlor 1221)	NA	<10	<10	NA	NA	4	ug/L
	PCB-1232 (Arochlor 1232)	NA	<5.0	<5.0	NA	NA	4	ug/L
	PCB-1248 (Arochlor 1248)	NA	<5.0	<5.0	NA	NA	4	ug/L
	PCB-1260 (Arochlor 1260)	NA	<10	<10	NA	NA	4	ug/L
	PCB-1016 (Arochlor 1016)	NA	<5.0	<5.0	NA	NA	4	ug/L
	Toxaphene	NA	<5.0	<5.0	NA	NA	4	ug/L
	Antimony	NA	8.4	13	6.8	8.5	4	ug/L
	Arsenic	NA	4.7	1.4	2.3	1.0	4	ug/L
	Asbestos	NA	<1.00	<6.9	NA	NA	4	MFL
	Beryllium	NA	2.7	0.012	0.90	0.0030	4	ug/L
	Cadmium	NA	<0.72	0.15	NA	0.038	4	ug/L
	Selenium	NA	25	18	14	8.0	4	ug/L
	Silver	NA	<0.58	<5.0	NA	NA	4	ug/L
	Thallium	NA	<0.27	0.29	NA	0.10	4	ug/L
	2,3,7,8-TCDD	NA	<54	<10	NA	NA	4	pg/L
Part C	**Pollutants known or believed to be present (and listed in Tables 2F-2, 2F-3, and 2F-4)**							
	Table 2F-2							
	Bromide	X	12	12	4.6	4.1	4	mg/L
	Chlorine, Total Residual							
	Color	X	15	15	10	9.5	4	Color Units
	Nitrate-Nitrite	X	0.71	1.5	0.68	1.1	4	mg/L as N
	Nitrogen, Total Organic	X	1.8	1.6	0.6	0.4	4	mg/L
	Radioactivity							
	Sulfite							
	Surfactants	X	0.22	0.2	0.11	0.1	2	mg/L
	Aluminum, Total	X	1800	1900	1767	1320	4	ug/L
	Boron, Total	X	27	110	14	48	4	ug/L
	Magnesium, Total	X	13000	14000	10767	9900	4	ug/L
	Molybdenum, Total	X	1.4	1.9	1.2	1.2	4	ug/L
	Tin, Total	X	43	47	21	17	4	ug/L
	Titanium, Total	X	38	35	33	25	4	ug/L
	Table 2F-3							
	Phenols, Total	X	0.0022	0.0022	0.0011	0.0011	2	mg/L
	Table 2F-4							
	Acetaldehyde	X	<200	<200	NA	NA	1	ug/L
	Allyl alcohol							
	Allyl chloride							
	Amyl acetate		<5.0	<5.0	NA	NA	1	ug/L
	Aniline	X	<5.0	<5.0	NA	NA	3	ug/L
	Benzonitrile							
	Benzyl chloride							
	Butyl acetate	X						
	Butylamine							
	Carbaryl							
	Carbofuran							
	Carbon disulfide		<1.0	<1.0	NA	NA	3	ug/L
	Chlorpyrifos							
	Coumaphos							
	Cresol							
	Crotonaldehyde							
	Cyclohexane	X	<5.0	<5.0	NA	NA	2	ug/L
	2,4-D (2,4-Dichlorophenoxyacetic acid)							
	Diazinon							
	Dicamba							
	Dichlobenil							
	Dichlone							
	2,2-Dichloropropionic acid							

NA - Averages not calculated if all results were below reporting limit, or if only one result reported.

Attachment 2F-VII
Outfall 003

Pollutant	Believed Present	Max Values		Avg Values		No. Storm Events Sampled	Units
		Initial Grab	Flow-Weighted Composite	Initial Grab	Flow-Weighted Composite		
Dichlorvos							
Diethyl amine	X	<50	<50	NA	NA	1	mg/L
Dimethyl amine							
Dinitrobenzene							
Diquat							
Disulfoton							
Diuron							
Epichlorohydrin	X	<200	<200	NA	NA	1	ug/L
Ethion							
Ethylene diamine							
Ethylene dibromide							
Furfural	X	<10	<10	NA	NA	1	ug/L
Guthion							
Isoprene							
Isopropanolamine							
Kelthane							
Kepone							
Malathion							
Mercaptodimethur							
Methoxychlor		<5.0	<5.0	NA	NA	4	ug/L
Methyl mercaptan	X						
Methyl methacrylate	X	<5.0	<5.0	NA	NA	5	ug/L
Methyl parathion							
Mevinphos							
Mexacarbate							
Monoethyl amine							
Monomethyl amine							
Naled							
Napthenic acid							
Nitrotoluene							
Parathion							
Phenolsulfonate							
Phosgene							
Propargite							
Propylene oxide							
Pyrethrins							
Quinoline	X	<0.047	<0.047	NA	NA	1	ug/L
Resorcinol							
Stronthium							
Strychnine							
Styrene	X	<1.0	<2.5	NA	NA	4	ug/L
2,4,5-T (2,4,5-Trichlorophenoxyacetic acid)							
TDE (Tetrachlorodiphenyl ethane)							
2,4,5-TP [2-(2,4,5-Trichlorophenoxy) propanoic acid]							
Trichlorofan							
Triethylamine	X	170	260	NA	NA	1	ug/L
Trimethylamine							
Uranium							
Vanadium	X	9.8	4.7	NA	NA	1	ug/L
Vinyl acetate	X	<5.0	<10	NA	NA	5	ug/L
Xylene	X	<1.0	<1.0	NA	NA	4	ug/L
Xylenol							
Zirconium							

NA - Averages not calculated if all results were below reporting limit, or if only one result reported.

Attachment 2F-VII
Outfall 004

	Pollutant	Believed Present	Max Values		Avg Values		No. Storm Events Sampled	Units
			Initial Grab	Flow-Weighted Composite	Initial Grab	Flow-Weighted Composite		
Part A	Required Parameters							
	O&G	NA	<2.4	<2.4	NA	NA	3	mg/L
	BOD5	NA	7.8	5.2	7.1	4.7	2	mg/L
	COD	NA	52	28	36	25	2	mg/L
	TSS	NA	78	63	73	57	2	mg/L
	Total Nitrogen	NA	2.7	1.62	1.3	1.0	3	mg/L
	Total Phosphorus	NA	0.14	0.14	0.047	0.056	4	mg/L
	pH	NA	8.12	8.22	8.12-7.94	8.22-7.29	3	SU
Part B	Pollutants included in facility effluent guidelines, or listed in NPDES permit for process wastewater (i.e. Outfalls 001 and A01)							
	Ammonia	NA	0.57	0.54	0.36	0.16	4	mg/L
	Barium	NA	120	52	70	40	4	ug/L
	Chromium	NA	3.5	4.2	2.8	2.4	4	ug/L
	Cobalt	NA	2.2	2.3	1.3	1.2	4	ug/L
	Copper	NA	27	27	14	13	4	ug/L
	Cyanide, Total	NA	0.0057	0.011	0.0035	0.0037	4	mg/L
	Fecal Coliform	NA	3000	500	1500	250	2	CFU/100 mL
	Fluoride	NA	3.35	3.54	2.67	2.01	4	mg/L
	Formaldehyde	NA	<100	<100	NA	NA	1	ug/L
	Iron, Total	NA	1600	1800	1367	1235	4	ug/L
	Lead	NA	10	9.7	5.4	4.4	4	ug/L
	Manganese	NA	130	110	107	85	4	ug/L
	Mercury	NA	<0.044	<0.20	NA	NA	4	ug/L
	Nickel	NA	31	20	22	17	4	ug/L
	Sulfate	NA	18	16	16	11	4	mg/L
	Zinc	NA	180	210	160	149	4	mg/L
	PFCs							
	(PFOA) Perfluoroctanoic Acid	NA	0.161	0.13	NA	NA	1	ng/L
	(PFBA) Perfluorobutanoic Acid	NA	184	141	NA	NA	1	ng/L
	(PFOSA) Perfluorooctanesulfonamide	NA	0.0324	<0.0250	NA	NA	1	ng/L
	(PFOS) Perfluorooctanesulfonate	NA	1.27	0.998	NA	NA	1	ng/L
	(PFPEeA) Perfluoropentanoic Acid	NA	6.96	4.87	NA	NA	1	ng/L
	(PFHxA) Perfluorohexanoic Acid	NA	0.977	0.703	NA	NA	1	ng/L
	(PFHpA) Perfluoroheptanoic Acid	NA	0.204	0.166	NA	NA	1	ng/L
	(PFNA) Perfluorononanoic Acid	NA	0.0442	0.0364	NA	NA	1	ng/L
	(PFDA) Perfluorodecanoic Acid	NA	0.0302	<0.0250	NA	NA	1	ng/L
	(PFUnA) Perfluoroundecanoic Acid	NA	<0.0250	<0.0250	NA	NA	1	ng/L
	(PFDoA) Perfluorododecanoic Acid	NA	<0.0500	<0.0500	NA	NA	1	ng/L
	(PFTrA) Perfluorotridecanoic Acid	NA	<0.0500	<0.0500	NA	NA	1	ng/L
	(PFBS) Perfluorobutanesulfonate	NA	2.42	1.82	NA	NA	1	ng/L
	(PFHS) Perfluorohexanesulfonate	NA	0.101	0.0817	NA	NA	1	ng/L
	126 Priority Pollutants							
	Acenaphthene	NA	<5.0	<5.0	NA	NA	4	ug/L
	Acrolein	NA	<10	<30	NA	NA	4	ug/L
	Acrylonitrile	NA	<10	<10	NA	NA	4	ug/L
	Benzene	NA	<1.0	<1.0	NA	NA	4	ug/L
	Benzidine	NA	<26	<26	NA	NA	4	ug/L
	Carbon tetrachloride	NA	<1.0	<1.0	NA	NA	4	ug/L
	Chlorobenzene	NA	<1.0	<1.0	NA	NA	4	ug/L
	1,2,4-trichlorobenzene	NA	<5.0	<5.0	NA	NA	4	ug/L
	Hexachlorobenzene	NA	<5.0	<5.0	NA	NA	4	ug/L
	1,2-dichloroethane	NA	<1.0	<1.0	NA	NA	4	ug/L
	1,1,1-trichloroethane	NA	<1.0	<1.0	NA	NA	4	ug/L
	Hexachloroethane	NA	<5.0	<5.0	NA	NA	4	ug/L
	1,1-dichloroethane	NA	<1.0	<1.0	NA	NA	4	ug/L
	1,1,2-trichloroethane	NA	<1.0	<1.0	NA	NA	4	ug/L
	1,1,2,2-tetrachloroethane	NA	<1.0	<1.0	NA	NA	4	ug/L
	Chloroethane	NA	<1.0	<1.0	NA	NA	4	ug/L
	Bis(2-chloroethyl) ether	NA	<5.0	<5.0	NA	NA	4	ug/L
	2-chloroethylvinyl ether	NA	<1.0	<10	NA	NA	4	ug/L
	2-chloronaphthalene	NA	<5.0	<5.0	NA	NA	4	ug/L
	2,4,6-trichlorophenol	NA	<5.0	<5.0	NA	NA	4	ug/L
	Parachlorometa cresol (4-chloro-3-methylphenol)	NA	<5.0	<5.0	NA	NA	4	ug/L
	Chloroform	NA	<1.0	<1.0	NA	NA	4	ug/L
	2-chlorophenol	NA	<6.0	<6.0	NA	NA	4	ug/L
	1,2-dichlorobenzene	NA	<1.0	<1.0	NA	NA	4	ug/L
	1,3-dichlorobenzene	NA	<1.0	<1.0	NA	NA	4	ug/L
	1,4-dichlorobenzene	NA	<1.0	<1.0	NA	NA	4	ug/L

NA - Averages not calculated if all results were below reporting limit, or if only one result reported.

Pollutant	Believed Present	Max Values		Avg Values		No. Storm Events Sampled	Units
		Initial Grab	Flow-Weighted Composite	Initial Grab	Flow-Weighted Composite		
3,3-dichlorobenzidine	NA	<12	<12	NA	NA	4	ug/L
1,1-dichloroethylene (1,1-dichloroethene)	NA	<1.0	<1.0	NA	NA	4	ug/L
1,2-trans-dichloroethylene (trans-1,2-dichloroethene)	NA	<1.0	<1.0	NA	NA	4	ug/L
2,4-dichlorophenol	NA	<5.0	0.44	NA	0.11	4	ug/L
1,2-dichloropropane	NA	<1.0	<1.0	NA	NA	4	ug/L
1,3-dichloropropylene (cis- and trans-1,3-dichloropropene)	NA	<1.0	<1.0	NA	NA	4	ug/L
2,4-dimethylphenol	NA	<5.0	<5.0	NA	NA	4	ug/L
2,4-dinitrotoluene	NA	<5.0	<5.0	NA	NA	4	ug/L
2,6-dinitrotoluene	NA	<5.0	<5.0	NA	NA	4	ug/L
1,2-diphenylhydrazine	NA	<5.0	<5.0	NA	NA	4	ug/L
Ethylbenzene	NA	<1.0	<1.0	NA	NA	4	ug/L
Fluoranthene	NA	<5.0	<5.0	NA	NA	4	ug/L
4-chlorophenyl phenyl ether	NA	<5.0	<5.0	NA	NA	3	ug/L
4-bromophenyl phenyl ether	NA	<5.0	<5.0	NA	NA	3	ug/L
Bis(2-chloroisopropyl) ether	NA	<5.0	<5.0	NA	NA	4	ug/L
Bis(2-chloroethoxy) methane	NA	<5.0	<5.0	NA	NA	4	ug/L
Methylene chloride (Dichloromethane)	NA	<1.0	<5.0	NA	NA	4	ug/L
Methyl chloride (Chloromethane)	NA	<1.0	<1.0	NA	NA	4	ug/L
Methyl bromide (Bromomethane)	NA	1.3	1.2	0.43	0.30	4	ug/L
Bromoform	NA	<1.0	<5.0	NA	NA	4	ug/L
Dichlorobromomethane (Bromodichloromethane)	NA	<1.0	<1.0	NA	NA	4	ug/L
Chlorodibromomethane (Dibromochloromethane)	NA	<1.0	<1.0	NA	NA	4	ug/L
Hexachlorobutadiene	NA	<5.0	<5.0	NA	NA	4	ug/L
Hexachlorocyclopentadiene	NA	<4.0	<5.0	NA	NA	4	ug/L
Isophorone	NA	<5.0	<5.0	NA	NA	4	ug/L
Naphthalene	NA	<5.0	<5.0	NA	NA	4	ug/L
Nitrobenzene	NA	<5.0	<5.0	NA	NA	4	ug/L
2-nitrophenol	NA	<6.7	<6.7	NA	NA	4	ug/L
4-nitrophenol	NA	<6.1	<6.1	NA	NA	4	ug/L
2,4-dinitrophenol	NA	<5.0	<5.0	NA	NA	4	ug/L
4,6-dinitro-o-cresol (2-Methyl-4,6-dinitrophenol)	NA	<10	<10	NA	NA	4	ug/L
N-nitrosodimethylamine	NA	<5.0	<5.0	NA	NA	4	ug/L
N-nitrosodiphenylamine	NA	<5.0	<5.0	NA	NA	4	ug/L
N-nitrosodi-n-propylamine	NA	<5.0	<5.0	NA	NA	4	ug/L
Pentachlorophenol	NA	<10	<10	NA	NA	4	ug/L
Phenol	NA	<5.0	<5.0	NA	NA	4	ug/L
Bis(2-ethylhexyl) phthalate	NA	<3.0	0.4	NA	0.1	4	ug/L
Butyl benzyl phthalate	NA	<5.0	<5.0	NA	NA	4	ug/L
Di-n-Butyl Phthalate	NA	<5.0	<5.0	NA	NA	4	ug/L
Di-n-octyl phthalate	NA	<5.0	<5.0	NA	NA	4	ug/L
Diethyl Phthalate	NA	<5.0	<5.0	NA	NA	4	ug/L
Dimethyl phthalate	NA	<5.0	<5.0	NA	NA	4	ug/L
Benzo(a) anthracene	NA	<5.0	<5.0	NA	NA	4	ug/L
Benzo(a) pyrene	NA	<5.0	<5.0	NA	NA	4	ug/L
Benzo(b) fluoranthene (3,4-Benzofluoranthene)	NA	<5.0	<5.0	NA	NA	4	ug/L
Benzo(k) fluoranthene	NA	<5.0	<5.0	NA	NA	4	ug/L
Chrysene	NA	<5.0	<5.0	NA	NA	4	ug/L
Acenaphthylene	NA	<5.0	<5.0	NA	NA	4	ug/L
Anthracene	NA	<5.0	<5.0	NA	NA	4	ug/L
Benzo(ghi) perylene	NA	<5.0	<5.0	NA	NA	4	ug/L
Fluorene	NA	<5.0	<5.0	NA	NA	4	ug/L
Phenanthrene	NA	<5.0	<5.0	NA	NA	4	ug/L
Dibenzo(a,h) anthracene	NA	<5.0	<5.0	NA	NA	4	ug/L
Indeno (1,2,3-cd) pyrene	NA	<5.0	<5.0	NA	NA	4	ug/L
Pyrene	NA	<5.0	<5.0	NA	NA	4	ug/L
Tetrachloroethylene (Tetrachlorethene)	NA	<1.0	<2.5	NA	NA	4	ug/L
Toluene	NA	<1.0	0.42	NA	0.11	4	ug/L
Trichloroethylene (Trichlorethene)	NA	<1.0	<1.0	NA	NA	4	ug/L
Vinyl chloride	NA	<1.0	<2.5	NA	NA	4	ug/L
Aldrin	NA	<0.50	0.019	NA	0.0048	4	ug/L
Dieldrin	NA	<1.0	<1.0	NA	NA	4	ug/L
Chlordane	NA	<5.0	<5.0	NA	NA	2	ug/L
4,4-DDT	NA	<1.0	<1.0	NA	NA	4	ug/L
4,4-DDE	NA	<1.0	<1.0	NA	NA	4	ug/L
4,4-DDD	NA	<1.0	<1.0	NA	NA	4	ug/L
Alpha-endosulfan (Endosulfan I)	NA	<0.50	<0.50	NA	NA	4	ug/L
Beta-endosulfan (Endosulfan II)	NA	<1.0	<1.0	NA	NA	4	ug/L
Endosulfan sulfate	NA	<1.0	<1.0	NA	NA	4	ug/L

NA - Averages not calculated if all results were below reporting limit, or if only one result reported.

Attachment 2F-VII
Outfall 004

	Pollutant	Believed Present	Max Values		Avg Values		No. Storm Events Sampled	Units
			Initial Grab	Flow-Weighted Composite	Initial Grab	Flow-Weighted Composite		
	Endrin	NA	<1.0	<1.0	NA	NA	4	ug/L
	Endrin aldehyde	NA	<1.0	<1.0	NA	NA	4	ug/L
	Heptachlor	NA	<0.50	0.024	NA	0.0060	4	ug/L
	Heptachlor epoxide	NA	<0.50	<0.50	NA	NA	4	ug/L
	Alpha-BHC	NA	<0.50	<0.50	NA	NA	4	ug/L
	Beta-BHC	NA	<0.50	<0.50	NA	NA	4	ug/L
	Gamma-BHC (Lindane)	NA	<0.50	0.045	NA	0.011	4	ug/L
	Delta-BHC	NA	<0.50	<0.50	NA	NA	4	ug/L
	PCB-1242 (Arochlor 1242)	NA	<5.0	<5.0	NA	NA	4	ug/L
	PCB-1254 (Arochlor 1254)	NA	<10	<10	NA	NA	4	ug/L
	PCB-1221 (Arochlor 1221)	NA	<10	<10	NA	NA	4	ug/L
	PCB-1232 (Arochlor 1232)	NA	<5.0	<5.0	NA	NA	4	ug/L
	PCB-1248 (Arochlor 1248)	NA	<5.0	<5.0	NA	NA	4	ug/L
	PCB-1260 (Arochlor 1260)	NA	<10	<10	NA	NA	4	ug/L
	PCB-1016 (Arochlor 1016)	NA	<5.0	<5.0	NA	NA	4	ug/L
	Toxaphene	NA	<5.0	<5.0	NA	NA	4	ug/L
	Antimony	NA	3.4	3.4	2.6	2.1	4	ug/L
	Arsenic	NA	2.5	1.4	1.7	1.2	4	ug/L
	Asbestos	NA	<2.50	<6.9	NA	NA	4	MFL
	Beryllium	NA	<2.4	0.025	NA	0.0063	4	ug/L
	Cadmium	NA	0.77	0.15	0.26	0.038	4	ug/L
	Selenium	NA	21	17	9.8	6.7	4	ug/L
	Silver	NA	<0.58	<5.0	NA	NA	4	ug/L
	Thallium	NA	<0.27	0.11	NA	0.028	4	ug/L
	2,3,7,8-TCDD	NA	<54	<54	NA	NA	4	pg/L
Part C	**Pollutants known or believed to be present (and listed in Tables 2F-2, 2F-3, and 2F-4)**							
	Table 2F-2							
	Bromide	X	1.1	1.1	0.37	0.29	4	mg/L
	Chlorine, Total Residual							
	Color	X	30	25	22	16	4	Color Unit
	Nitrate-Nitrite	X	0.78	0.75	0.58	0.51	4	mg/L
	Nitrogen, Total Organic	X	1.8	1.3	0.60	0.49	4	mg/L
	Radioactivity							
	Sulfite							
	Surfactants	X	0.35	0.28	0.30	0.17	3	mg/L
	Aluminum, Total	X	990	1100	837	778	4	ug/L
	Boron, Total	X	<14	110	NA	28	4	ug/L
	Magnesium, Total	X	12000	14000	11300	9325	4	ug/L
	Molybdenum, Total	X	4.2	4.1	1.8	1.6	4	ug/L
	Tin, Total	X	38	39	17	12	4	ug/L
	Titanium, Total	X	28	31	26	21	4	ug/L
	Table 2F-3							
	Phenols, Total	X	0.0057	0.0049	0.0048	0.0025	2	mg/L
	Table 2F-4							
	Acetaldehyde	X	<200	<200	NA	NA	1	ug/L
	Allyl alcohol							
	Allyl chloride							
	Amyl acetate		<5.0	<5.0	NA	NA	1	ug/L
	Aniline	X	<5.0	<5.0	NA	NA	3	ug/L
	Benzonitrile							
	Benzyl chloride							
	Butyl acetate	X						
	Butylamine							
	Carbaryl							
	Carbofuran							
	Carbon disulfide		<1.0	<1.0	NA	NA	3	ug/L
	Chlorpyrifos							
	Coumaphos							
	Cresol							
	Crotonaldehyde							
	Cyclohexane	X	<5.0	<5.0	NA	NA	3	ug/L
	2,4-D (2,4-Dichlorophenoxyacetic acid)							
	Diazinon							
	Dicamba							
	Dichlobenil							
	Dichlone							
	2,2-Dichloropropionic acid							

NA - Averages not calculated if all results were below reporting limit, or if only one result reported.

Pollutant	Believed Present	Max Values		Avg Values		No. Storm Events Sampled	Units
		Initial Grab	Flow-Weighted Composite	Initial Grab	Flow-Weighted Composite		
Dichlorvos							
Diethyl amine	X	<50	<50	NA	NA	1	mg/L
Dimethyl amine							
Dinitrobenzene							
Diquat							
Disulfoton							
Diuron							
Epichlorohydrin	X	<200	<200	NA	NA	1	ug/L
Ethion							
Ethylene diamine							
Ethylene dibromide							
Furfural	X	<10	<10	NA	NA	1	
Guthion							
Isoprene							
Isopropanolamine							
Kelthane							
Kepone							
Malathion							
Mercaptodimethur							
Methoxychlor		<5.0	<5.0	NA	NA	4	ug/L
Methyl mercaptan	X						
Methyl methacrylate	X	<5.0	<10	NA	NA	5	ug/L
Methyl parathion							
Mevinphos							
Mexacarbate							
Monoethyl amine							
Monomethyl amine							
Naled							
Napthenic acid							
Nitrotoluene							
Parathion							
Phenolsulfonate							
Phosgene							
Propargite							
Propylene oxide							
Pyrethrins							
Quinoline	X	0.07	0.055	NA	NA	1	ug/L
Resorcinol							
Stronthium							
Strychnine							
Styrene	X	<1.0	<2.5	NA	NA	4	ug/L
2,4,5-T (2,4,5-Trichlorophenoxyacetic acid)							
TDE (Tetrachlorodiphenyl ethane)							
2,4,5-TP [2-(2,4,5-Trichlorophenoxy) propanoic acid]							
Trichlorofan							
Triethylamine	X	11	<10	NA	NA	1	ug/L
Trimethylamine							
Uranium							
Vanadium	X	2.4	2	NA	NA	1	ug/L
Vinyl acetate	X	<5.0	<10	NA	NA	5	ug/L
Xylene	X	<1.0	<1.0	NA	NA	4	ug/L
Xylenol							
Zirconium							

NA - Averages not calculated if all results were below reporting limit, or if only one result reported.