*AWM*

# *Existing Facility Evaluation Data for: Walnutdale*

***Evaluated by:*** ***Jason Stegink***

## orage Pond #1

Pits #1+2

**Max. Storage Vol. Method:** Cum. Storage Vol

Usable

**Storage Months:** 1 months 10,270 Ft³ **Critical Months:** Nov - Nov

76,820 gallons

| | | |
|---|---|---|
| **Waste generated:** | 40 *Cubic Feet* | 299 *Gallons* |
| **Existing capacity:** | 10,230 *Cubic Feet* | 76,520 *Gallons* |
| **Remaining available:** | 10,190 *Cubic Feet* | 76,221 *Gallons* |

### Facility Dimensions

| | | | |
|---|---|---|---|
| **Shape:** | Rectangle | **Top Length:** | 91.0 ft |
| **Sideslope:** | 0:1 | **Bottom Length:** | 91.0 ft |
| **Storage Depth:** | 6.0 ft | **Top Width:** | 35.0 ft |
| **Freeboard:** | 1.0 ft | **Bottom Width:** | 35.0 ft |
| | | **Bot Dimensions** | 35.0 x 91.0 ft |
| | | **TopDimensions:** | 35.0 x 91.0 ft |

### Waste Components / Quantities

| | |
|---|---|
| **25Yr24Hr Storm Depth:** | 0.37 ft. |
| **Prec Minus Evap Depth:** | 0.26 ft. |
| **Volume Required (Wastes):** | 40 cu. ft |

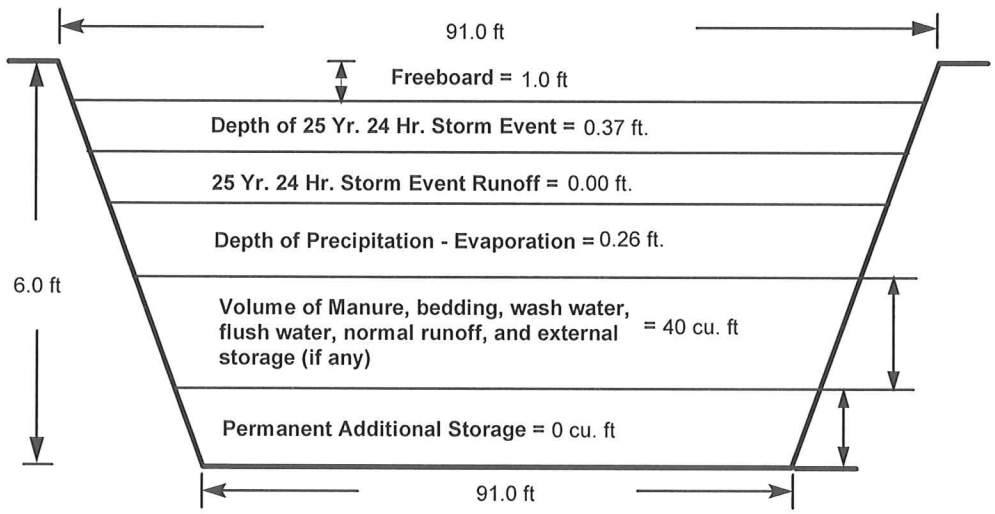


Freeboard 1 Ft

25yr 24hr Storm 4.5"

*AWM*

## *Existing Facility Evaluation Data for: Walnutdale* Pits #1+2

***Evaluated by:*** ***Jason Stegink***

| | | | | | |
|---|---|---|---|---|---|
| **Ramp Type:** | Parallel | **Ramp Length (RL):** | 36.0 ft | **Short Bottom Width (BSW):** | 0.0 ft |
| **Ramp Slope:** | 6:1 | **Ramp Width (RW):** | 35.0 ft | **Long Bottom Width (BLW):** | 35.0 ft |

**Volume of Structure Occupied by Ramp:** 3675 cu ft

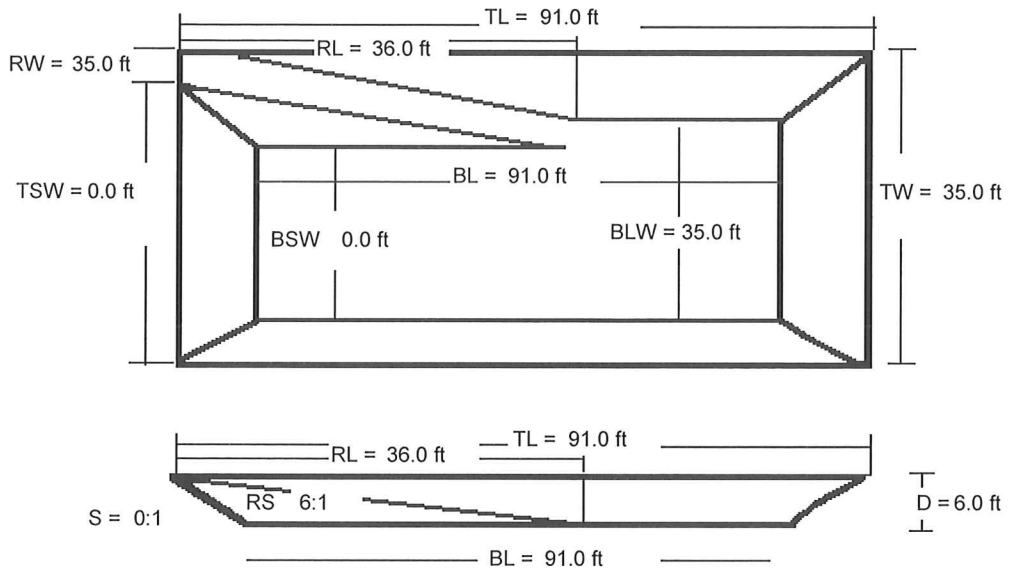

*AWM*

# *Existing Facility Evaluation Data for:* *Walnutdale*

***Evaluated by:*** ***Jason Stegink***

Settling Basin

## orage Pond #1

**Max. Storage Vol. Method:** Cum. Storage Vol

**Storage Months:** 1 months 2,331 ft³ **Critical Months:** Nov - Nov

| | | | |
|---|---|---|---|
| **Waste generated:** | 40 ***Cubic Feet*** | 299 ***Gallons*** | 17,436 Total gallons |
| **Existing capacity:** | 2,291 ***Cubic Feet*** | 17,137 ***Gallons*** | |
| **Remaining available:** | 2,251 ***Cubic Feet*** | 16,837 ***Gallons*** | |

### Facility Dimensions

| | | | |
|---|---|---|---|
| **Shape:** | Rectangle | **Top Length:** | 46.0 ft |
| **Sideslope:** | 0:1 | **Bottom Length:** | 46.0 ft |
| **Storage Depth:** | 6.0 ft | **Top Width:** | 16.5 ft |
| **Freeboard:** | 0.0 ft | **Bottom Width:** | 16.5 ft |
| | | **Bot Dimensions** | 16.5 x 46.0 ft |
| | | **TopDimensions:** | 16.5 x 46.0 ft |

### Waste Components / Quantities

| | |
|---|---|
| **25Yr24Hr Storm Depth:** | 0.37 ft. |
| **Prec Minus Evap Depth:** | 0.26 ft. |
| **Volume Required (Wastes):** | 40 cu. ft |

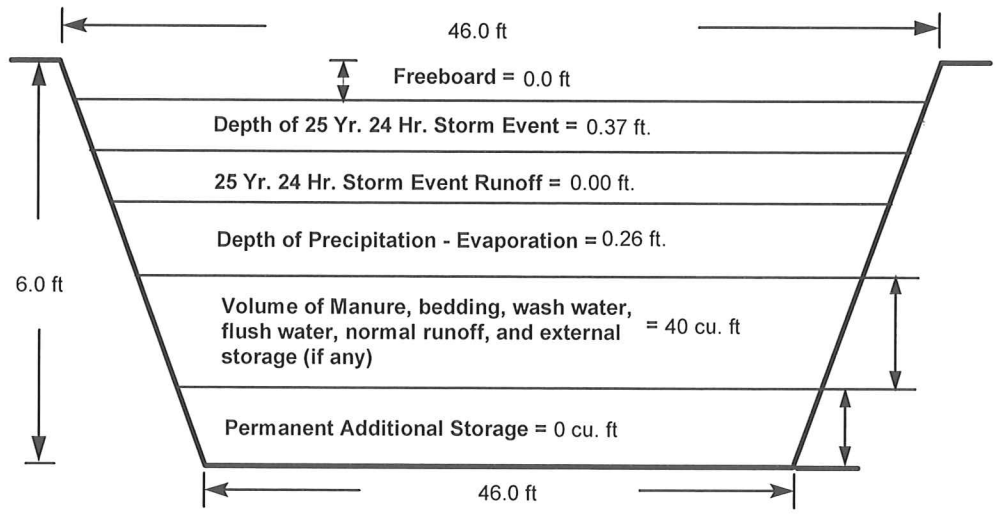


Freeboard has been removed, the divider wall is six feet, exterior walls are 8 feet, allows for 2 ft of freeboard
1/2 Liquid Transfer tank = Approx 8,500 gallons
1/2 solids Settling = Approx. 1,135 ft³
using an estimated density of 35#/ft³ Approx 20 Tons of solids

# *AWM*
## *Existing Facility Evaluation Data for: Walnutdale*

***Evaluated by:*** ***Jason Stegink***

| | | | | | |
|---|---|---|---|---|---|
| **Ramp Type:** | Parallel | **Ramp Length (RL):** | 36.0 ft | **Short Bottom Width (BSW):** | 0.0 ft |
| **Ramp Slope:** | 6:1 | **Ramp Width (RW):** | 16.5 ft | **Long Bottom Width (BLW):** | 16.5 ft |

**Volume of Structure Occupied by Ramp:** 1782 cu ft

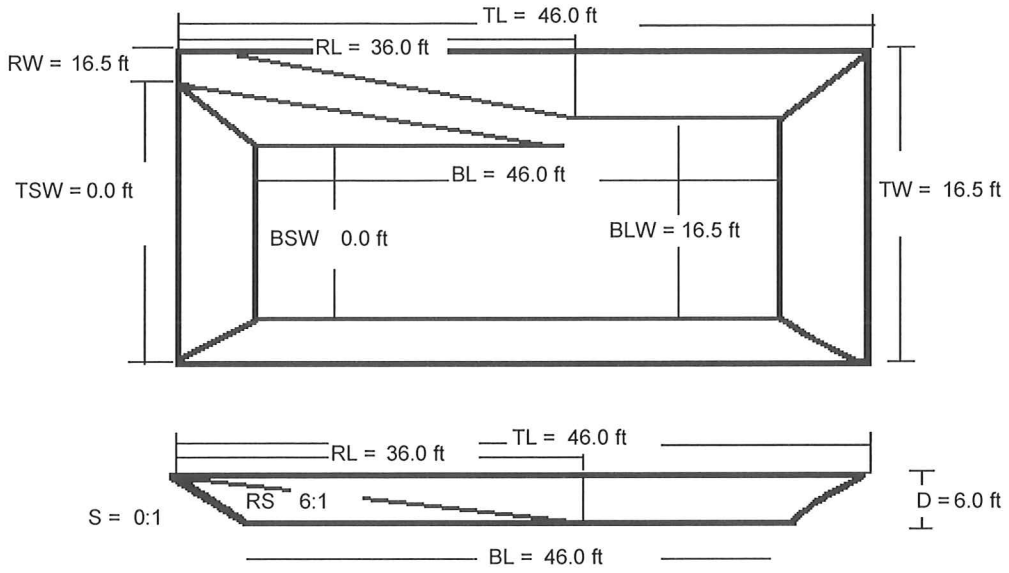


Please see Asbuilt data from CJD Consulting.

# AWM
## Existing Facility Evaluation Data for: Walnutdale

*Evaluated by:* *Jason Stegink*

Slurry Store

### .orage Pond #1

**Max. Storage Vol. Method:** Cum. Storage Vol

**Storage Months:** 1 months **Critical Months:** Nov - Nov

| | | |
|---|---|---|
| **Waste generated:** | 40 *Cubic Feet* | 299 *Gallons* |
| **Existing capacity:** | 117,449 *Cubic Feet* | 878,519 *Gallons* |
| **Remaining available:** | 117,409 *Cubic Feet* | 878,219 *Gallons* |

878,818 gallon Capacity

**Facility Dimensions**

| | | | |
|---|---|---|---|
| **Shape:** | Circle | **Top Diameter:** | 80.0 ft |
| **Sideslope:** | 0:1 | **Bottom Diameter:** | 80.0 ft |
| **Storage Depth:** | 25.0 ft | | |
| **Freeboard:** | 1.0 ft | | |

**Waste Components / Quantities**

| | |
|---|---|
| **25Yr24Hr Storm Depth:** | 0.37 ft. |
| **Prec Minus Evap Depth:** | 0.26 ft. |
| **Volume Required (Wastes):** | 40 cu. ft |

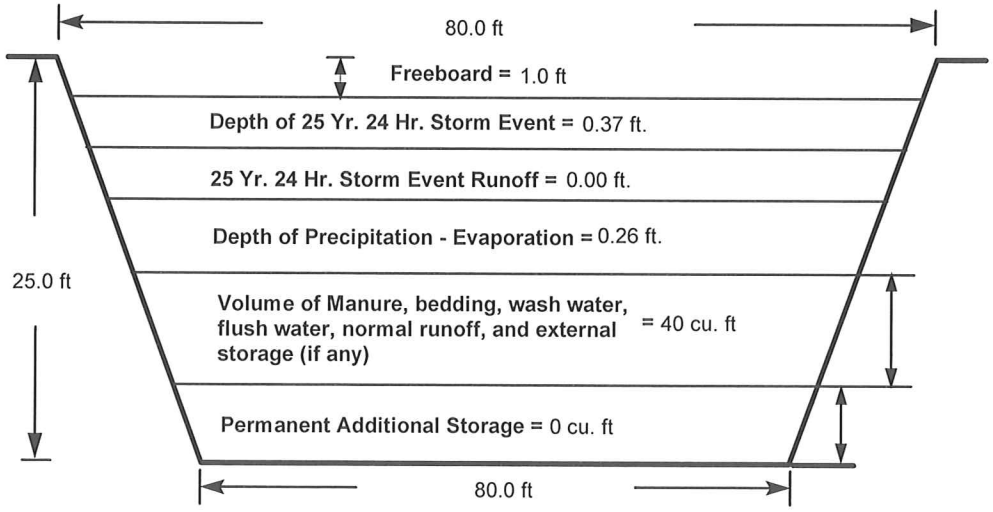


Capacity in MMP has the 8,500 gallon capacity of the Settling basin transfer side.

*AWM*

# *Existing Facility Evaluation Data for: Walnutdale*

***Evaluated by:*** ***Jason Stegink***

Pit #6

## orage Pond #1

**Max. Storage Vol. Method:** Cum. Storage Vol

**Storage Months:** 1 months **Critical Months:** Nov - Nov

Total gallons: 57,978

| | | |
|---|---|---|
| **Waste generated:** | 40 *Cubic Feet* | 299 *Gallons* |
| **Existing capacity:** | 7,711 *Cubic Feet* | 57,678 *Gallons* |
| **Remaining available:** | 7,671 *Cubic Feet* | 57,379 *Gallons* |

### Facility Dimensions

| | | | |
|---|---|---|---|
| **Shape:** | Rectangle | **Top Length:** | 76.0 ft |
| **Sideslope:** | 0:1 | **Bottom Length:** | 76.0 ft |
| **Storage Depth:** | 6.0 ft | **Top Width:** | 34.0 ft |
| **Freeboard:** | 1.0 ft | **Bottom Width:** | 34.0 ft |
| | | **Bot Dimensions** | 34.0 x 76.0 ft |
| | | **TopDimensions:** | 34.0 x 76.0 ft |

### Waste Components / Quantities

| | |
|---|---|
| **25Yr24Hr Storm Depth:** | 0.37 ft. |
| **Prec Minus Evap Depth:** | 0.26 ft. |
| **Volume Required (Wastes):** | 40 cu. ft |

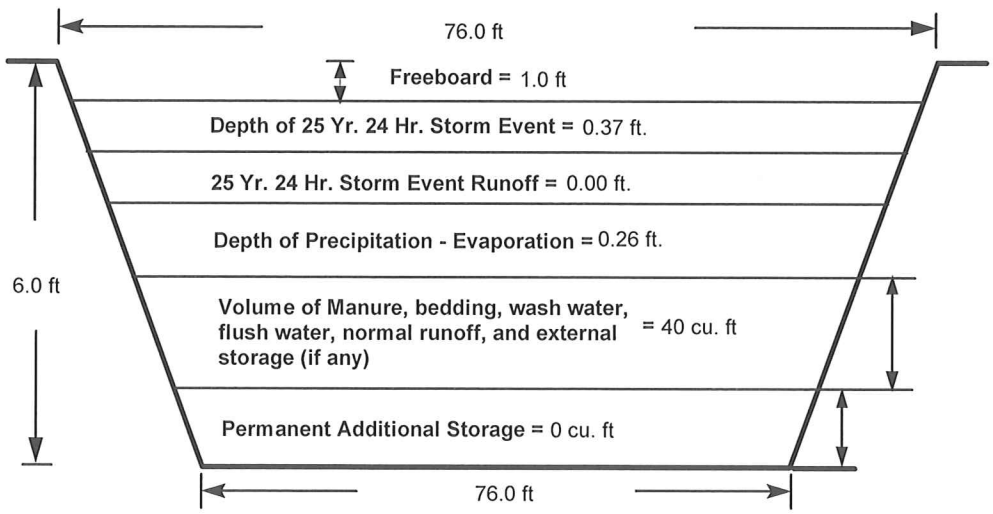

# *AWM*
# *Existing Facility Evaluation Data for: Walnutdale*

***Evaluated by:*** ***Jason Stegink***

| | | | | | |
|---|---|---|---|---|---|
| **Ramp Type:** | Parallel | **Ramp Length (RL):** | 36.0 ft | **Short Bottom Width (BSW):** | 0.0 ft |
| **Ramp Slope:** | 6:1 | **Ramp Width (RW):** | 34.0 ft | **Long Bottom Width (BLW):** | 34.0 ft |

**Volume of Structure Occupied by Ramp:** 3570 cu ft

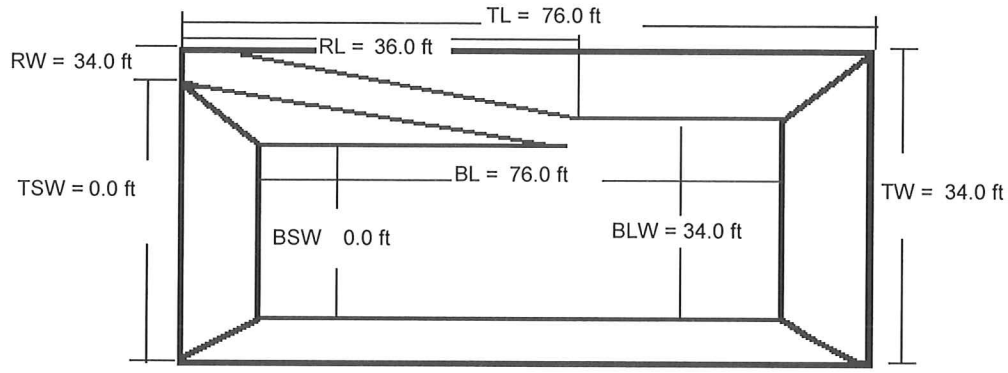


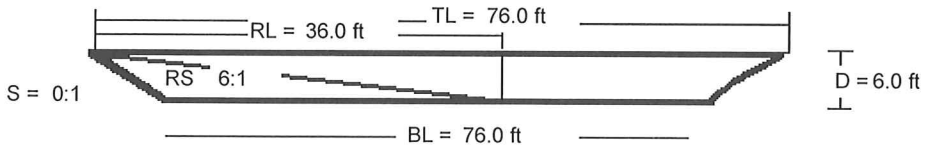

# *AWM*
# *Existing Facility Evaluation Data for: Walnutdale*

***Evaluated by:*** ***Jason Stegink***

Pit #7

## Storage Pond #1

95,063 gallons

**Max. Storage Vol. Method:** Cum. Storage Vol

**Storage Months:** 1 months **Critical Months:** Nov - Nov

| | | |
|---|---|---|
| **Waste generated:** | 40 ***Cubic Feet*** | 299 ***Gallons*** |
| **Existing capacity:** | 12,669 ***Cubic Feet*** | 94,764 ***Gallons*** |
| **Remaining available:** | 12,629 ***Cubic Feet*** | 94,465 ***Gallons*** |

### Facility Dimensions

| | | | |
|---|---|---|---|
| **Shape:** | Rectangle | **Top Length:** | 90.0 ft |
| **Sideslope:** | 0:1 | **Bottom Length:** | 90.0 ft |
| **Storage Depth:** | 6.0 ft | **Top Width:** | 44.0 ft |
| **Freeboard:** | 1.0 ft | **Bottom Width:** | 44.0 ft |
| | | **Bot Dimensions** | 44.0 x 90.0 ft |
| | | **TopDimensions:** | 44.0 x 90.0 ft |

### Waste Components / Quantities

| | |
|---|---|
| **25Yr24Hr Storm Depth:** | 0.37 ft. |
| **Prec Minus Evap Depth:** | 0.26 ft. |
| **Volume Required (Wastes):** | 40 cu. ft |

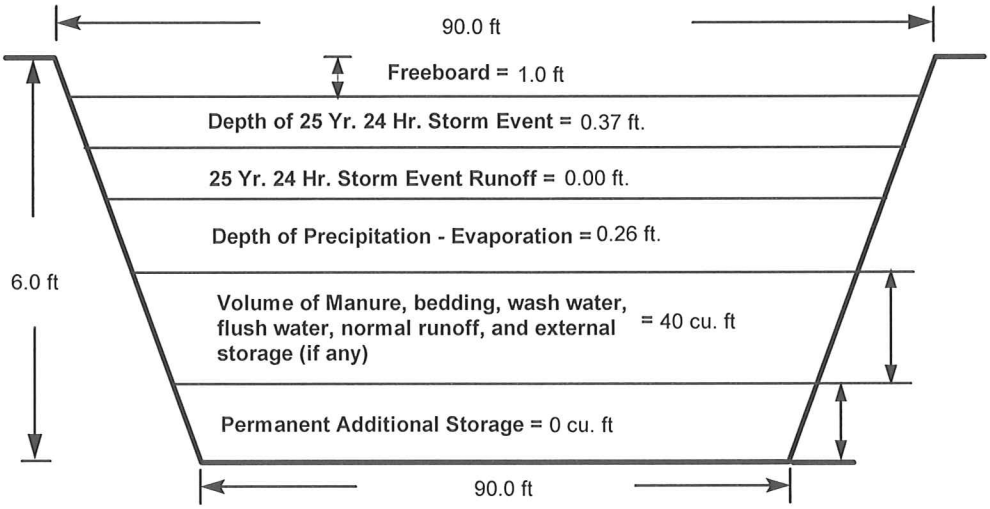

# *AWM*
# *Existing Facility Evaluation Data for: Walnutdale*

***Evaluated by:*** ***Jason Stegink***

| | | | | | |
|---|---|---|---|---|---|
| **Ramp Type:** | Parallel | **Ramp Length (RL):** | 36.0 ft | **Short Bottom Width (BSW):** | 0.0 ft |
| **Ramp Slope:** | 6:1 | **Ramp Width (RW):** | 44.0 ft | **Long Bottom Width (BLW):** | 44.0 ft |

**Volume of Structure Occupied by Ramp:** 4620 cu ft

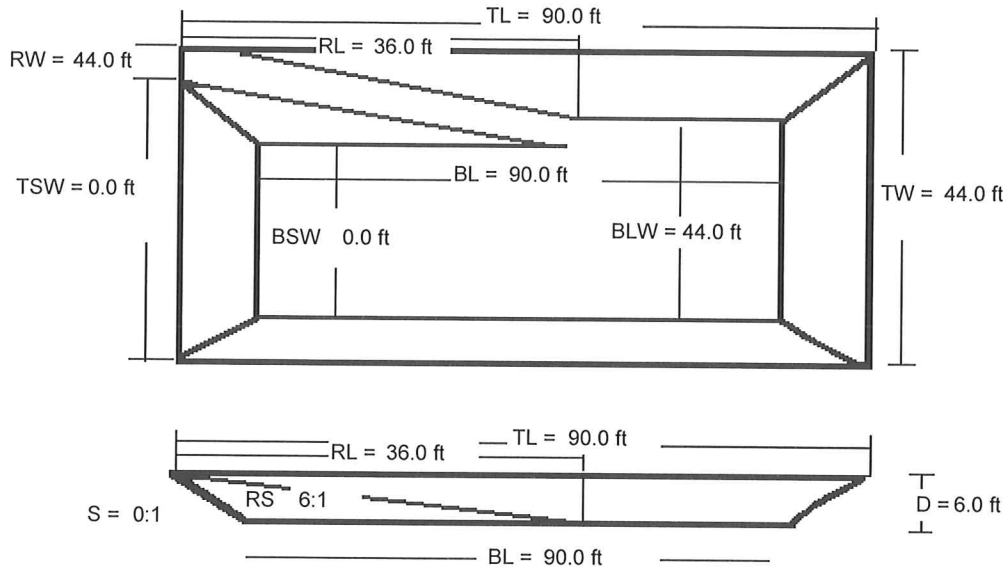

*AWM*

# *Existing Facility Evaluation Data for: Walnutdale Dairy*

***Evaluated by:*** ***Jason Stegink***

Pit #8 East Storage

## Storage Pond #1

**Max. Storage Vol. Method:** Cum. Storage Vol

**Storage Months:** 12 months **Critical Months:** Jan - Dec

| | | |
|---|---|---|
| **Waste generated:** | 923 *Cubic Feet* | 6,904 *Gallons* |
| **Existing capacity:** | 663,423 *Cubic Feet* | 4,962,404 *Gallons* |
| **Remaining available:** | 662,500 *Cubic Feet* | 4,955,500 *Gallons* |

### Facility Dimensions

| | | | |
|---|---|---|---|
| **Shape:** | Rectangle | **Top Length:** | 330.0 ft |
| **Sideslope:** | 3:1 | **Bottom Length:** | 235.2 ft |
| **Storage Depth:** | 15.8 ft | **Top Width:** | 260.0 ft |
| **Freeboard:** | 1.0 ft | **Bottom Width:** | 165.2 ft |
| | | **Bot Dimensions** | 165.2 x 235.2 ft |
| | | **TopDimensions:** | 260.0 x 330.0 ft |

### Waste Components / Quantities

| | |
|---|---|
| **25Yr24Hr Storm Depth:** | 0.39 ft. |
| **Prec Minus Evap Depth:** | 2.10 ft. |
| **Volume Required (Wastes):** | 923 cu. ft |

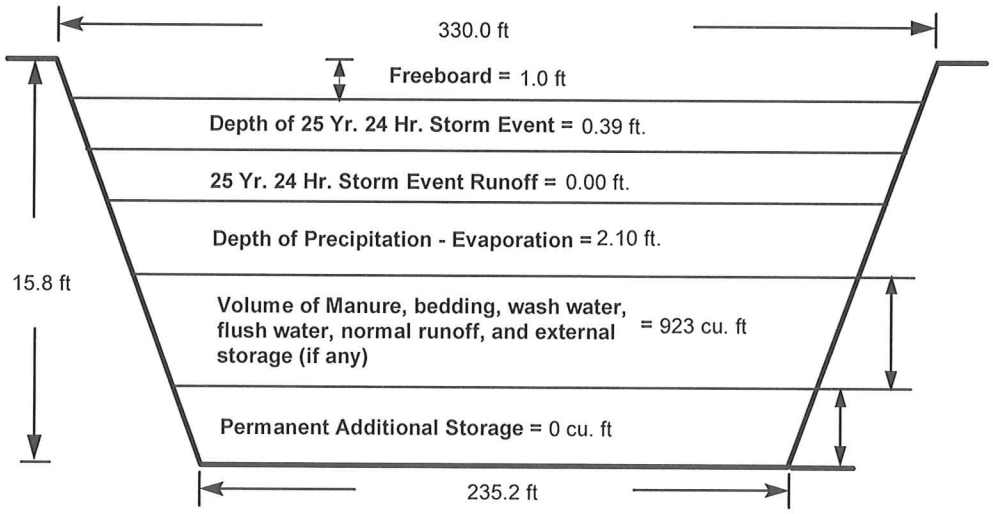

# *AWM*
# *Existing Facility Evaluation Data for: Walnutdale Dairy*

***Evaluated by:*** ***Jason Stegink***

| | | | | | |
|---|---|---|---|---|---|
| **Ramp Type:** | Parallel | **Ramp Length (RL):** | 150.0 ft | **Short Bottom Width (BSW):** | 130.2 ft |
| **Ramp Slope:** | 10:1 | **Ramp Width (RW):** | 35.0 ft | **Long Bottom Width (BLW):** | 165.2 ft |

**Volume of Structure Occupied by Ramp:** 30458 cu ft

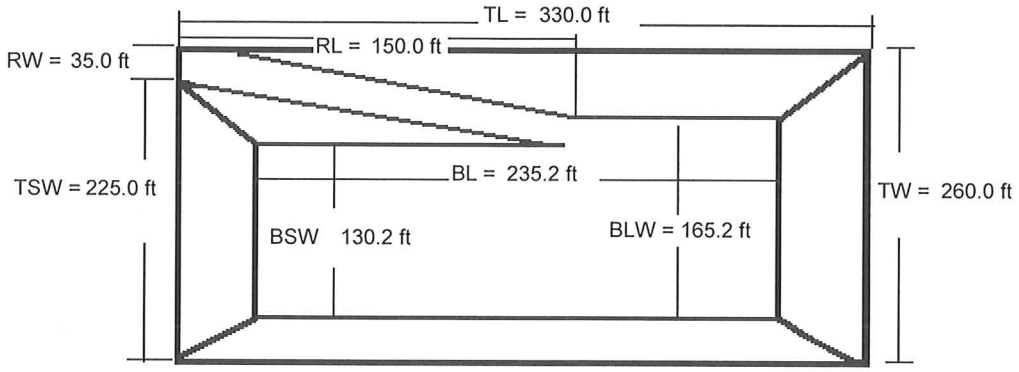


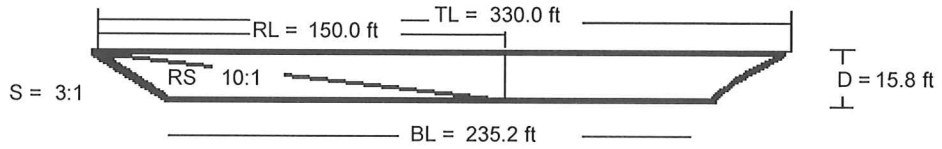

*AWM*

# *Existing Facility Evaluation Data for: Walnutdale Dairy*

***Evaluated by:*** ***Jason Stegink***

## Storage Pond #2

Catch Basin

**Max. Storage Vol. Method:** Cum. Storage Vol

**Storage Months:** 6 months **Critical Months:** Dec - May

| | | |
|---|---|---|
| **Waste generated:** | 254,870 *Cubic Feet* | 1,906,428 *Gallons* |
| **Existing capacity:** | 392,144 *Cubic Feet* | 2,933,237 *Gallons* |
| **Remaining available:** | 137,274 *Cubic Feet* | 1,026,810 *Gallons* |

### Facility Dimensions

| | | | |
|---|---|---|---|
| **Shape:** | Rectangle | **Top Length:** | 360.0 ft |
| **Sideslope:** | 0:1 | **Bottom Length:** | 360.0 ft |
| **Storage Depth:** | 6.0 ft | **Top Width:** | 289.0 ft |
| **Freeboard:** | 1.0 ft | **Bottom Width:** | 289.0 ft |
| | | **Bot Dimensions** | 289.0 x 360.0 ft |
| | | **TopDimensions:** | 289.0 x 360.0 ft |

### Waste Components / Quantities
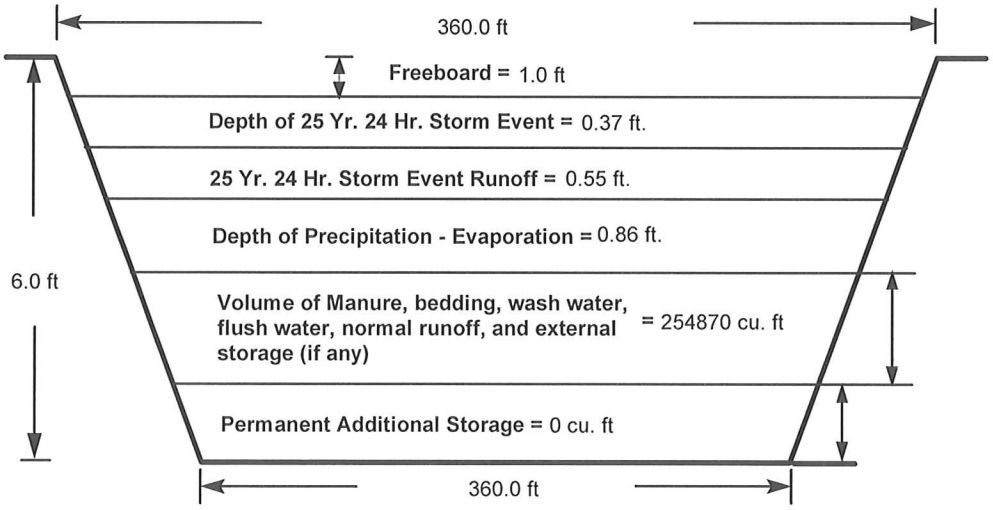
| | |
|---|---|
| **25Yr24Hr Storm Depth:** | 0.37 ft. |
| **Prec Minus Evap Depth:** | 0.86 ft. |
| **Volume Required (Wastes):** | 254870 cu. ft |