APPENDIX A

TOWEL WASH ROOM
AND
EPA METHOD 1 SHEETS

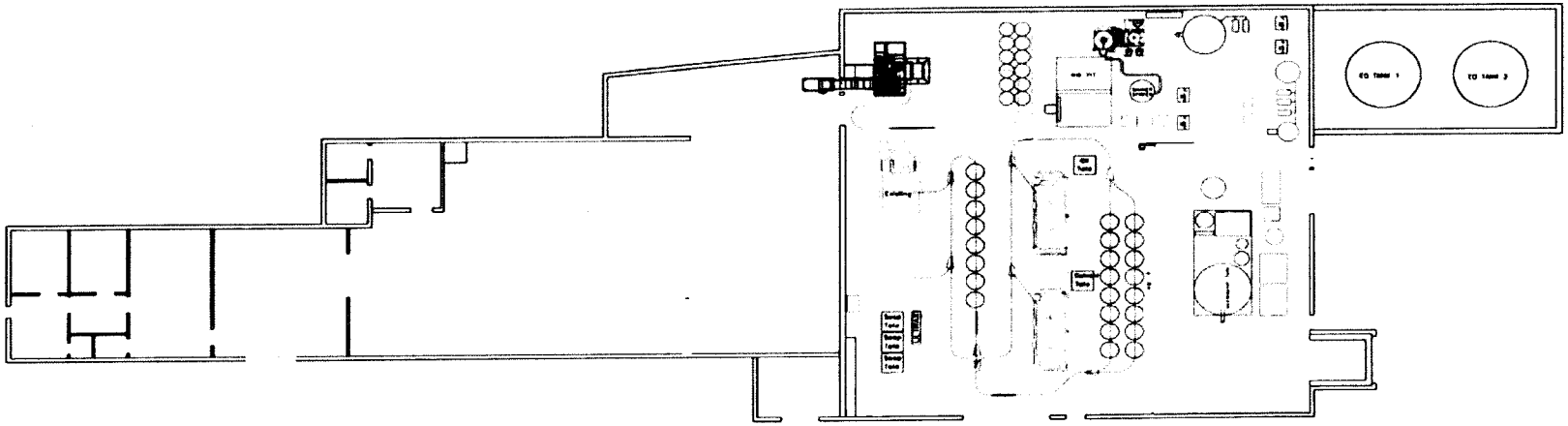

NOT-TO-SCALE

TRC
21 Griffin Rd. North
Windsor, CT 06095
(860) 298-9692

G&K SERVICES, INC.

FIGURE A-1
341 TAYLOR STREET BUILDING FLOOR PLAN

Date: 08/12 | Project No. 193461

EPA Method 1 Data – Ellis Washer Enclosure Ducts

TRC Environmental Corporation
EPA Method 1 Data Sheet

Firm	G&K Services, Inc.
Location	341 Manchester Street
Diameters Upstream	2.0
Diameters Downstream	8.0
Nipple Size (in.)	0

Total Traverse Points Required	12
Number of Ports	2
Points Per Port	6
Traverse (Horizontal or Vertical)	Horizontal

Minimum Number of Traverse Points For Particulate and Non-Particulate Traverses

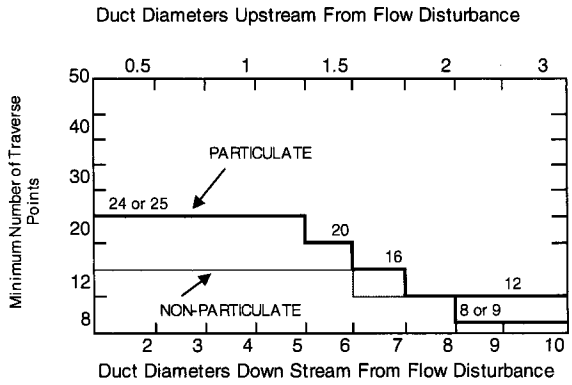

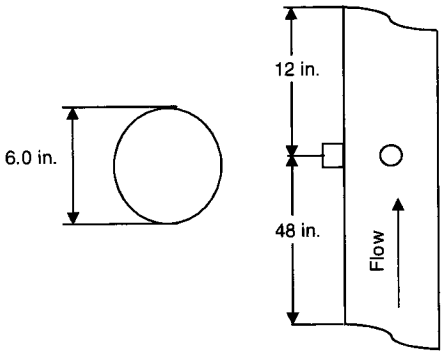

Point Number On a Diameter	(Percent of Stack Diameter from Inside Wall to Traverse Point) (No. of Traverse Points on a Dia.) 4	6	8	10	12
1	6.7	4.4	3.2	2.6	2.1
2	25.0	14.6	10.5	8.2	6.7
3	75.0	29.6	19.4	14.6	11.8
4	93.3	70.4	32.3	22.6	17.7
5		85.4	67.7	34.2	25.0
6		95.6	80.6	65.8	35.6
7			89.5	77.4	64.4
8			96.8	85.4	75.0
9				91.8	82.3
10				97.4	88.2
11					93.3
12					97.9

Traverse Point Location

Point Number	Distance From Wall	Nipple Size	Total Distance
1	0.3	0.0	0.3
2	0.9	0.0	0.9
3	1.8	0.0	1.8
4	4.2	0.0	4.2
5	5.1	0.0	5.1
6	5.7	0.0	5.7
7			
8			
9			
10			
11			
12			

TRC
Customer-Focused Solutions

21 Griffin Road North
Windsor, CT 06095
860 298-9692

Figure A-1

Ellis Washer Enclosure Ducts

EPA Method 1 Data – Dryer Stack

TRC Environmental Corporation
EPA Method 1 Data Sheet

Firm	G&K Services, Inc.
Location	341 Manchester Street
Diameters Upstream	2.0
Diameters Downstream	6.0
Nipple Size (in.)	0

Total Traverse Points Required	16
Number of Ports	2
Points Per Port	8
Traverse (Horizontal or Vertical)	Horizontal

Minimum Number of Traverse Points For Particulate and Non-Particulate Traverses

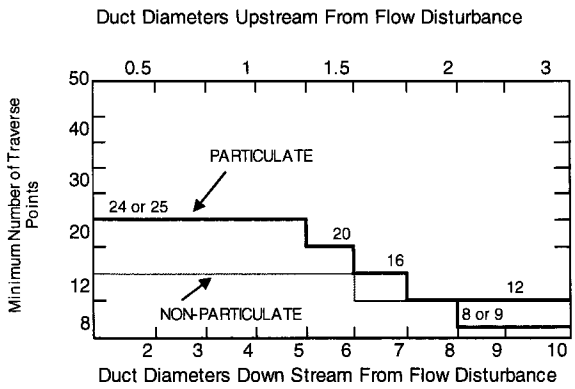

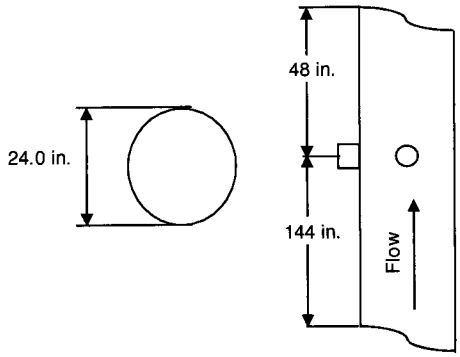

Point Number On a Diameter	(Percent of Stack Diameter from Inside Wall to Traverse Point) (No. of Traverse Points on a Dia.) 4	6	8	10	12
1	6.7	4.4	3.2	2.6	2.1
2	25.0	14.6	10.5	8.2	6.7
3	75.0	29.6	19.4	14.6	11.8
4	93.3	70.4	32.3	22.6	17.7
5		85.4	67.7	34.2	25.0
6		95.6	80.6	65.8	35.6
7			89.5	77.4	64.4
8			96.8	85.4	75.0
9				91.8	82.3
10				97.4	88.2
11					93.3
12					97.9

Traverse Point Location

Point Number	Distance From Wall	Nipple Size	Total Distance
1	0.8	0.0	0.8
2	2.5	0.0	2.5
3	4.7	0.0	4.7
4	7.8	0.0	7.8
5	16.2	0.0	16.2
6	19.3	0.0	19.3
7	21.5	0.0	21.5
8	23.2	0.0	23.2
9			
10			
11			
12			

TRC Environmental Solutions
21 Griffin Road North
Windsor, CT 06095
860 298-9692

Figure A-2

Dryer Stack

EPA Method 1 Data – Towel Wash Room Temporary Exhaust Stack

TRC Environmental Corporation
EPA Method 1 Data Sheet

Firm	G&K Services, Inc.	Total Traverse Points Required	16
Location	341 Manchester Street	Number of Ports	2
Diameters Upstream	2.0	Points Per Port	8
Diameters Downstream	8.0	Traverse (Horizontal or Vertical)	Horizontal
Nipple Size (in.)	0		

Minimum Number of Traverse Points For Particulate and Non-Particulate Traverses

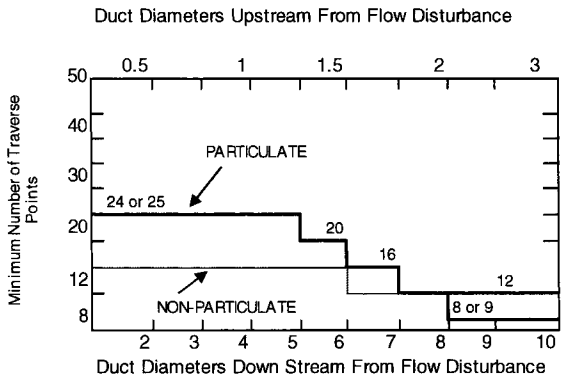

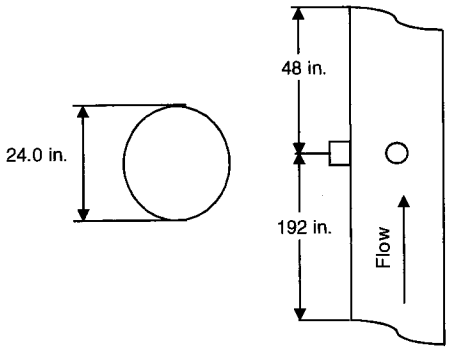

Point Number On a Diameter	(Percent of Stack Diameter from Inside Wall to Traverse Point) (No. of Traverse Points on a Dia.) 4	6	8	10	12
1	6.7	4.4	3.2	2.6	2.1
2	25.0	14.6	10.5	8.2	6.7
3	75.0	29.6	19.4	14.6	11.8
4	93.3	70.4	32.3	22.6	17.7
5		85.4	67.7	34.2	25.0
6		95.6	80.6	65.8	35.6
7			89.5	77.4	64.4
8			96.8	85.4	75.0
9				91.8	82.3
10				97.4	88.2
11					93.3
12					97.9

Traverse Point Location

Point Number	Distance From Wall	Nipple Size	Total Distance
1	0.8	0.0	0.8
2	2.5	0.0	2.5
3	4.7	0.0	4.7
4	7.8	0.0	7.8
5	16.2	0.0	16.2
6	19.3	0.0	19.3
7	21.5	0.0	21.5
8	23.2	0.0	23.2
9			
10			
11			
12			

TRC
21 Griffin Road North
Windsor, CT 06095
860 298-9692

Figure A-3

Towel Wash Room Temporary Exhaust

APPENDIX B

TOWEL WASH ROOM DATA

SHEET NO. _____ OF _____

PROJECT NO. _____

DATE _____

BY _____

CHK'D _____

TRC Results you can rely on

SUBJECT GTK Toom air

11/27/12

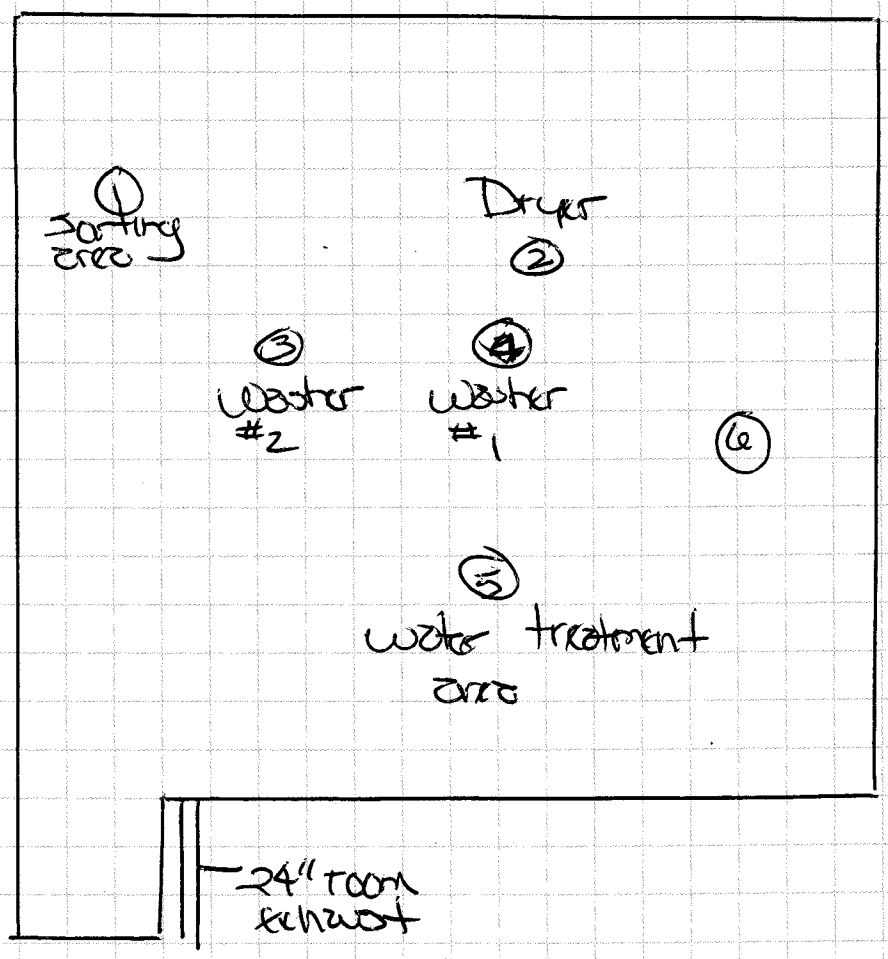

Print Towels - no strip

Location	0900	1045	1300	1500	1630
1	10 ppm	28.4	6.2	7.5	~~16~~ 17.4
2	7.2	22.0	12.4	4.0	21.1
3	6.7	25.2	10.8	13.5	18.5
4	6.5	25.4	10.6	6.0	19.2
5	6.6	21.6	11.2	6.6	16.2
6	6.0	18.2	4.8	4.8	17.1

A

SHEET NO. _____ OF _____

PROJECT NO. _____

DATE _____

BY _____

CHK'D _____

TRC Results you can rely on

SUBJECT _____

11/28/12 Shop Towels w/ strip

Location	0900	1110	1330	1810
1	8.4	6.2	~~31.9~~ 22.9	6.0
2	10.5	5.7	18.0	5.9
3	11.2	4.5	19.9	6.2
4	10.7	4.0	18.8	6.4
5	5.2	3.8	27.0	6.0
6	11.5	12.1	31.9	7.5

11/29/12 - Print Towels

Location	0900	1130	1500
1	6.9	38.9	17.8
2	7.2	30.6	26.5
3	7.4	32.1	31.2
4	6.8	30.5	21.6
5	7.5	42.7	16.6
6	9.0	33.0	23.5

SHEET NO. _____ OF _____

PROJECT NO. _____

DATE _____

BY _____

CHK'D _____

TRC Results you can rely on

SUBJECT G+K

Room Enclosure Pressure Drop readings

11/27/12		11/28/12		11/29/12	
Time	ΔP	Time	ΔP	Time	ΔP
0815	-0.011	0745	-0.011	0730	-0.008
900	-0.011	0900	-0.012	0800	-0.008
1040	-0.011	1000	-0.014	0915	-0.007
1200	-0.014	1110	-0.017	1105	-0.006
1305	-0.017	1240	-0.018	1218	-0.005
1331	-0.018	1335	-0.014	1400	-0.007
1500	-0.014	1520	-0.017		
1615	-0.013	→ moved shortridge to ① washroom & adjusted NDO's			
1820	-0.016				
1900	-0.017				
2010	-0.015	1820	-0.021		
		1920	-0.025		

EQ Tank

Time	Direction of gas flow	Time	Direction of Air flow	Time	Direction of Air flow
0930	in	0900	in	0715	in
1000	in	1235	in		
1515	in				

① in order to prepare for possible high concentrations in washroom tomorrow Bill had me move shortridge & we closed down the door by the break room opened a door closer to the washroom & opened the rolling door 3 16" - left it this way for remainder of day - capture vent flow unchanged + no apparent effect on room concentration

19346 1.0000.0000 Report Appendices 19346

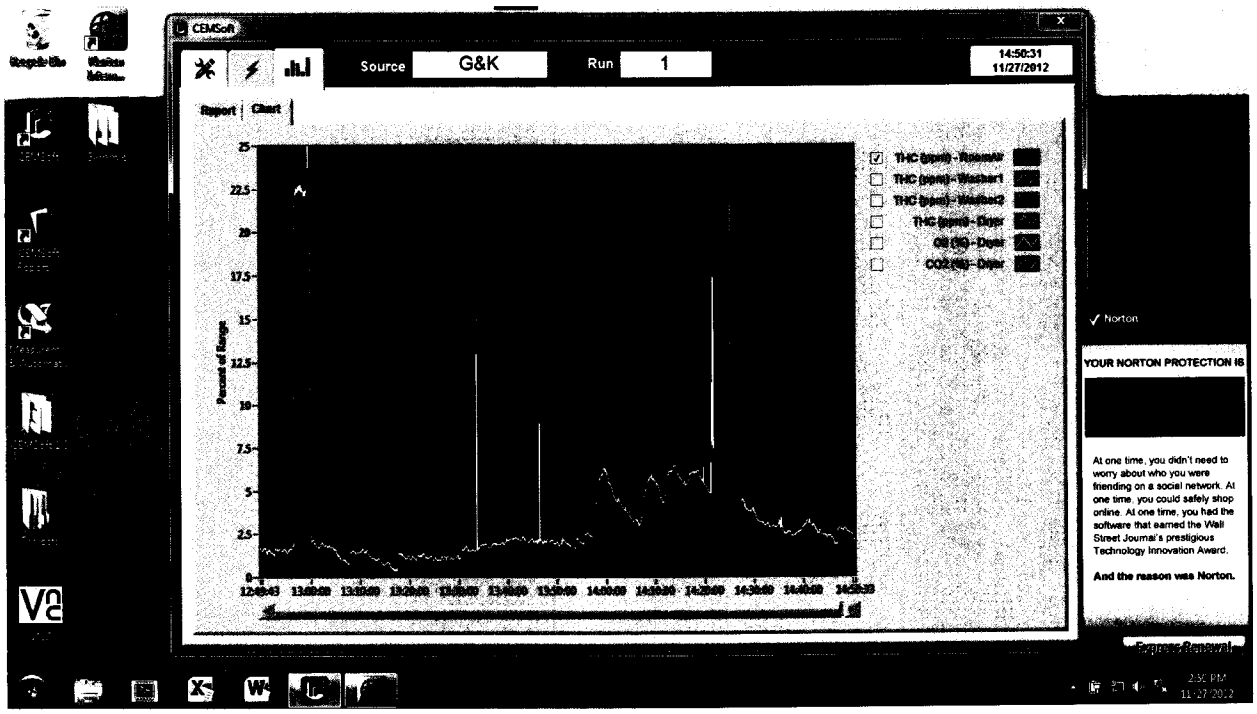
CEMSoft
Source
G&K
Run
1
14:50:31
11/27/2012
Report
Chart
Percent of Range
25
22.5
20
17.5
15
12.5
10
7.5
5
2.5
0
THC (ppm) - RoomAir
THC (ppm) - Washer1
THC (ppm) - Washer2
THC (ppm) - Dryer
O2 (%) - Dryer
CO2 (%) - Dryer
Norton
YOUR NORTON PROTECTION IS
At one time, you didn't need to worry about who you were friending on a social network. At one time, you could safely shop online. At one time, you had the software that earned the Wall Street Journal's prestigious Technology Innovation Award.
And the reason was Norton.
Express Renewal

Shop Towels
No Strip

CEM CALIBRATION DATA
EPA Method 25A

Firm:	G&K	Analyzer:	California Analytical
Location:	Manchester, NH	Span Value (S):	892
Operator	W Deveau	Analyzer Range:	3000
Sample Location:	Room Air Vent		
Date:	27-Nov-12		

TOTAL HYDROCARBONS

PRE-TEST Calibration Error Check:

	Cylinder ID	Cylinder Gas Conc. (Ca)	Analyzer Response (C)	Slope (m)	Predicted Response (pr)	Calibration Error (<5%) (ce)
Zero, C_O		0.0	1.47			
C_{low} (25-35% span)	CC112496	250.9	251.1	0.9994	250.7	0.2%
C_{mid} (45-55% span)	XC025800B	450.2	450.6	0.9994	449.9	0.2%
C_{high} (80-90% span)	CC100940	892.0	892.9	0.9994	891.4	0.2%

Calibration Drift Check:

Run No:		1	2	3	4	AVG
Time						
Initial Zero	C_{OI}	1.5	-0.6	4.0		
Initial Span	C_{MI}	450.2	451.7	448.9		
Final Zero	C_{OF}	-0.6	4.0	11.7		
Final Span	C_{MF}	451.7	448.9	450.3		
Calibration Drift (< 3%)	CD_O	0.2%	-0.5%	-0.9%	0.0%	
Calibration Drift (< 3%)	CD_M	-0.2%	0.3%	-0.2%		
THC Conc. (ppm, wet)	C_{THCavg}					

Nomenclature

C_{high}	Span gas analyzer response
C_O	Zero gas analyzer response
C_a	Cylinder gas value
C_{OI}	Initial calibration zero response
C_{OF}	Final calibration zero response
C_{MI}	Initial calibration upscale response
C_{MF}	Final calibration upscale response
CDo	Zero calibration drift
CDm	Upscale calibration drift
m	Slope
pr	Predicted response
ce	Calibration error
C	Analyzer response
S	Span
C_{NMHC}	Non-methane hydrocarbon concentration
C_{THC}	Total hydrocarbon concentration
C_{CH4}	Methane concentration

Calculations

$$m = (C_{high} - C_O) / C_a$$

$$pr = m \times C_a$$

$$ce = (C - pr) / C_a \times 100$$

$$CD_O = (C_{OI} - C_{OF}) / S$$

$$C_{NMHC} = C_{THC} - C_{CH4}$$

$$ER = C_{avg} \quad MW \quad 2.5962e\text{-}9 \quad Q \quad 60$$

where,

MW = molecular weight of methane, 16.04
2.5962e-9 = conversion from ppm to pounds per standard cubic feet.
60 = conversion from minutes to hour
Q = flow in units of standard cubic feet per minute

h:\stack\connecticut\projects\2012\g&k - manchester, nh\compliance testing\field data\nov 27 - shop towels - no strip\[g&k - washer no. 1 emissions - shop towels no strip - 11-27-2012.xls]calibrations

Cylinder Gas	THC (ppm) RoomAir
Zero ID	
Zero Expiration	
Low ID	CC112496
Low Expiration	9/13/13
Low Concentration	250.9
Mid ID	XC025800B
Mid Expiration	8/8/2015
Mid Concentration	450.2
High ID	CC100940
High Expiration	3/31/2013
High Concentration	892

Calibration Error	THC (ppm) RoomAir
Zero Response	1.47
Zero Error (%)	0.16
Low Response	251.14
Low Error (%)	0.1
Mid Response	450.61
Mid Error (%)	0.09
High Response	892.91
High Error (%)	0.1

Initial Bias	THC (ppm) RoomAir
Zero Response	0
Zero Bias (%)	0
Span Concentration	450.2
Span Response	0
Span Bias (%)	0

Shop Towels
No Strip

Log Averages	THC (ppm) RoomAir
START BASELINE	
27Nov2012 - 07:31:00	14.29
27Nov2012 - 07:32:00	14.59
27Nov2012 - 07:33:00	15.64
27Nov2012 - 07:34:00	15.76
27Nov2012 - 07:35:00	14.37
27Nov2012 - 07:36:00	15
27Nov2012 - 07:37:00	16.37
27Nov2012 - 07:38:00	17.66
27Nov2012 - 07:39:00	18.06
27Nov2012 - 07:40:00	18.26
27Nov2012 - 07:41:00	19.21
27Nov2012 - 07:42:00	20.63
27Nov2012 - 07:43:00	20.1
27Nov2012 - 07:44:00	20.34
27Nov2012 - 07:45:00	19.67
27Nov2012 - 07:46:00	21.47
27Nov2012 - 07:47:00	21.28
27Nov2012 - 07:48:00	23.41
27Nov2012 - 07:49:00	23.08
27Nov2012 - 07:50:00	23.96
27Nov2012 - 07:51:00	25.33
27Nov2012 - 07:52:00	28.18
27Nov2012 - 07:53:00	28.88
27Nov2012 - 07:54:00	29.92
27Nov2012 - 07:55:00	30.7
27Nov2012 - 07:56:00	32.77
27Nov2012 - 07:57:00	33.6
27Nov2012 - 07:58:00	35.91
27Nov2012 - 07:59:00	37.35
END BASELINE	
27Nov2012 - 08:00:00	39.4
27Nov2012 - 08:01:00	81
27Nov2012 - 08:02:00	16.78
27Nov2012 - 08:03:00	-0.55
27Nov2012 - 08:04:00	-0.07
27Nov2012 - 08:05:00	200.57
27Nov2012 - 08:06:00	450.48
27Nov2012 - 08:07:00	451.65
27Nov2012 - 08:08:00	278.57
27Nov2012 - 08:09:00	21.38
START ROOM AIR 1	
27Nov2012 - 08:10:00	20.65
27Nov2012 - 08:11:00	22.79
27Nov2012 - 08:12:00	23.09
27Nov2012 - 08:13:00	28.97
27Nov2012 - 08:14:00	24.3
27Nov2012 - 08:15:00	24.58
27Nov2012 - 08:16:00	25.16
27Nov2012 - 08:17:00	25.8
27Nov2012 - 08:18:00	26.03
27Nov2012 - 08:19:00	27.73
27Nov2012 - 08:20:00	27.79

Washroom Exhaust Summaries

Time	Ave THC Conc	MW	(SCFM)	lb/hr
0810 - 1100	24.6	12	11476	0.53
1113 - 1420	31.3	12	11378	0.66
1427 - 1700	26.7	12	11462	0.57
1710 - 2030	23.1	12	11381	0.49
Daily Average	26.4	12	11424	0.56

27Nov2012 - 08:21:00	27.69
27Nov2012 - 08:22:00	27.01
27Nov2012 - 08:23:00	28.37
27Nov2012 - 08:24:00	27.42
27Nov2012 - 08:25:00	28.88
27Nov2012 - 08:26:00	28.2
27Nov2012 - 08:27:00	28.56
27Nov2012 - 08:28:00	27.94
27Nov2012 - 08:29:00	26.82
27Nov2012 - 08:30:00	28.44
27Nov2012 - 08:31:00	28.32
27Nov2012 - 08:32:00	27.83
27Nov2012 - 08:33:00	25.81
27Nov2012 - 08:34:00	26.37
27Nov2012 - 08:35:00	25.39
27Nov2012 - 08:36:00	25.32
27Nov2012 - 08:37:00	23.97
27Nov2012 - 08:38:00	23.36
27Nov2012 - 08:39:00	22.34
27Nov2012 - 08:40:00	22.1
27Nov2012 - 08:41:00	25.2
27Nov2012 - 08:42:00	26.16
27Nov2012 - 08:43:00	24.87
27Nov2012 - 08:44:00	24.41
27Nov2012 - 08:45:00	26.1
27Nov2012 - 08:46:00	25.58
27Nov2012 - 08:47:00	25
27Nov2012 - 08:48:00	24.52
27Nov2012 - 08:49:00	24.96
27Nov2012 - 08:50:00	24.38
27Nov2012 - 08:51:00	23.98
27Nov2012 - 08:52:00	22.72
27Nov2012 - 08:53:00	22.54
27Nov2012 - 08:54:00	21.66
27Nov2012 - 08:55:00	20.61
27Nov2012 - 08:56:00	19.78
27Nov2012 - 08:57:00	17.07
27Nov2012 - 08:58:00	15.65
27Nov2012 - 08:59:00	14.36
27Nov2012 - 09:00:00	14.13
27Nov2012 - 09:01:00	12.6
27Nov2012 - 09:02:00	10.96
27Nov2012 - 09:03:00	9.41
27Nov2012 - 09:04:00	8.59
27Nov2012 - 09:05:00	6.83
27Nov2012 - 09:06:00	6.8
27Nov2012 - 09:07:00	4.61
27Nov2012 - 09:08:00	3.96
27Nov2012 - 09:09:00	12.17
27Nov2012 - 09:10:00	12.7
27Nov2012 - 09:11:00	11.71
27Nov2012 - 09:12:00	10.47
27Nov2012 - 09:13:00	10.52
27Nov2012 - 09:14:00	10.36
27Nov2012 - 09:15:00	12.75
27Nov2012 - 09:16:00	15.63
27Nov2012 - 09:17:00	16.51
27Nov2012 - 09:18:00	18.12
27Nov2012 - 09:19:00	18.73
27Nov2012 - 09:20:00	19.62
27Nov2012 - 09:21:00	19.14

27Nov2012 - 09:22:00	19.5
27Nov2012 - 09:23:00	21.06
27Nov2012 - 09:24:00	21.21
27Nov2012 - 09:25:00	22.91
27Nov2012 - 09:26:00	23.21
27Nov2012 - 09:27:00	21.53
27Nov2012 - 09:28:00	20.65
27Nov2012 - 09:29:00	20.45
27Nov2012 - 09:30:00	18.94
27Nov2012 - 09:31:00	17.74
27Nov2012 - 09:32:00	17.01
27Nov2012 - 09:33:00	14.68
27Nov2012 - 09:34:00	13.96
27Nov2012 - 09:35:00	11.63
27Nov2012 - 09:36:00	9.96
27Nov2012 - 09:37:00	8.16
27Nov2012 - 09:38:00	5.99
27Nov2012 - 09:39:00	3.97
27Nov2012 - 09:40:00	4.12
27Nov2012 - 09:41:00	11.46
27Nov2012 - 09:42:00	13.1
27Nov2012 - 09:43:00	13.07
27Nov2012 - 09:44:00	12.9
27Nov2012 - 09:45:00	12.88
27Nov2012 - 09:46:00	10.54
27Nov2012 - 09:47:00	9.87
27Nov2012 - 09:48:00	7.11
27Nov2012 - 09:49:00	6.2
27Nov2012 - 09:50:00	14.68
27Nov2012 - 09:51:00	20.49
27Nov2012 - 09:52:00	18.12
27Nov2012 - 09:53:00	19.5
27Nov2012 - 09:54:00	21.09
27Nov2012 - 09:55:00	25.62
27Nov2012 - 09:56:00	21.82
27Nov2012 - 09:57:00	19.25
27Nov2012 - 09:58:00	19.7
27Nov2012 - 09:59:00	23.26
27Nov2012 - 10:00:00	23.48
27Nov2012 - 10:01:00	20.6
27Nov2012 - 10:02:00	18.77
27Nov2012 - 10:03:00	17.61
27Nov2012 - 10:04:00	16.12
27Nov2012 - 10:05:00	14.53
27Nov2012 - 10:06:00	13.09
27Nov2012 - 10:07:00	12.79
27Nov2012 - 10:08:00	15.02
27Nov2012 - 10:09:00	12.38
27Nov2012 - 10:10:00	12.52
27Nov2012 - 10:11:00	10.82
27Nov2012 - 10:12:00	9.14
27Nov2012 - 10:13:00	10.35
27Nov2012 - 10:14:00	12.87
27Nov2012 - 10:15:00	13.39
27Nov2012 - 10:16:00	14.31
27Nov2012 - 10:17:00	13.65
27Nov2012 - 10:18:00	12.65
27Nov2012 - 10:19:00	13.41
27Nov2012 - 10:20:00	11.38
27Nov2012 - 10:21:00	11.16
27Nov2012 - 10:22:00	13.97

27Nov2012 - 10:23:00	12.75
27Nov2012 - 10:24:00	10.83
27Nov2012 - 10:25:00	12.02
27Nov2012 - 10:26:00	13.34
27Nov2012 - 10:27:00	16.3
27Nov2012 - 10:28:00	18.07
27Nov2012 - 10:29:00	18.56
27Nov2012 - 10:30:00	17.83
27Nov2012 - 10:31:00	17.28
27Nov2012 - 10:32:00	16.57
27Nov2012 - 10:33:00	18.32
27Nov2012 - 10:34:00	20.12
27Nov2012 - 10:35:00	19.23
27Nov2012 - 10:36:00	18.17
27Nov2012 - 10:37:00	16.87
27Nov2012 - 10:38:00	13.78
27Nov2012 - 10:39:00	9.64
27Nov2012 - 10:40:00	5.13
27Nov2012 - 10:41:00	-0.5
27Nov2012 - 10:42:00	2.04
27Nov2012 - 10:43:00	8.44
27Nov2012 - 10:44:00	12.16
27Nov2012 - 10:45:00	9.13
27Nov2012 - 10:46:00	8.71
27Nov2012 - 10:47:00	7.79
27Nov2012 - 10:48:00	5.98
27Nov2012 - 10:49:00	0.43
27Nov2012 - 10:50:00	3.68
27Nov2012 - 10:51:00	1.5
27Nov2012 - 10:52:00	2.46
27Nov2012 - 10:53:00	17.43
27Nov2012 - 10:54:00	33.22
27Nov2012 - 10:55:00	31.67
27Nov2012 - 10:56:00	23.67
27Nov2012 - 10:57:00	18.44
27Nov2012 - 10:58:00	13.73
27Nov2012 - 10:59:00	10.57
27Nov2012 - 11:00:00	7.33
END ROOM AIR 1	
AVERAGES	**24.6**
27Nov2012 - 11:01:00	3.95
27Nov2012 - 11:02:00	16.04
27Nov2012 - 11:03:00	35.48
27Nov2012 - 11:04:00	36.89
27Nov2012 - 11:05:00	25.37
27Nov2012 - 11:06:00	21.53
27Nov2012 - 11:07:00	358.2
27Nov2012 - 11:08:00	448.47
27Nov2012 - 11:09:00	448.93
27Nov2012 - 11:10:00	308.96
27Nov2012 - 11:11:00	-44.9
27Nov2012 - 11:12:00	-27.53
START ROOM AIR 2	
27Nov2012 - 11:13:00	39.36
27Nov2012 - 11:14:00	38.67
27Nov2012 - 11:15:00	31.32
27Nov2012 - 11:16:00	27.22

27Nov2012 - 11:17:00	26.32
27Nov2012 - 11:18:00	20.46
27Nov2012 - 11:19:00	20.33
27Nov2012 - 11:20:00	21.34
27Nov2012 - 11:21:00	18.21
27Nov2012 - 11:22:00	17.66
27Nov2012 - 11:23:00	14.57
27Nov2012 - 11:24:00	12.65
27Nov2012 - 11:25:00	12.46
27Nov2012 - 11:26:00	20
27Nov2012 - 11:27:00	20.25
27Nov2012 - 11:28:00	17.26
27Nov2012 - 11:29:00	16.7
27Nov2012 - 11:30:00	21.69
27Nov2012 - 11:31:00	31.61
27Nov2012 - 11:32:00	39.84
27Nov2012 - 11:33:00	43.98
27Nov2012 - 11:34:00	44.13
27Nov2012 - 11:35:00	44.56
27Nov2012 - 11:36:00	47.71
27Nov2012 - 11:37:00	46.01
27Nov2012 - 11:38:00	44.05
27Nov2012 - 11:39:00	44.04
27Nov2012 - 11:40:00	45.94
27Nov2012 - 11:41:00	47.31
27Nov2012 - 11:42:00	45.51
27Nov2012 - 11:43:00	42.7
27Nov2012 - 11:44:00	43.16
27Nov2012 - 11:45:00	42.96
27Nov2012 - 11:46:00	43.23
27Nov2012 - 11:47:00	40.44
27Nov2012 - 11:48:00	38.13
27Nov2012 - 11:49:00	34.58
27Nov2012 - 11:50:00	32.29
27Nov2012 - 11:51:00	27.6
27Nov2012 - 11:52:00	22.31
27Nov2012 - 11:53:00	18.09
27Nov2012 - 11:54:00	19.5
27Nov2012 - 11:55:00	15.05
27Nov2012 - 11:56:00	12.58
27Nov2012 - 11:57:00	22.17
27Nov2012 - 11:58:00	28.38
27Nov2012 - 11:59:00	26.69
27Nov2012 - 12:00:00	22.48
27Nov2012 - 12:01:00	20.13
27Nov2012 - 12:02:00	21.41
27Nov2012 - 12:03:00	19.68
27Nov2012 - 12:04:00	18.45
27Nov2012 - 12:05:00	35.44
27Nov2012 - 12:06:00	44
27Nov2012 - 12:07:00	53.26
27Nov2012 - 12:08:00	55.15
27Nov2012 - 12:09:00	50.35
27Nov2012 - 12:10:00	52.1
27Nov2012 - 12:11:00	54.17
27Nov2012 - 12:12:00	57
27Nov2012 - 12:13:00	52.66
27Nov2012 - 12:14:00	50.74
27Nov2012 - 12:15:00	50.37
27Nov2012 - 12:16:00	49.57
27Nov2012 - 12:17:00	47.81

27Nov2012 - 12:18:00	43.9
27Nov2012 - 12:19:00	41.14
27Nov2012 - 12:20:00	38.12
27Nov2012 - 12:21:00	35.32
27Nov2012 - 12:22:00	31.89
27Nov2012 - 12:23:00	32.28
27Nov2012 - 12:24:00	31.41
27Nov2012 - 12:25:00	26.29
27Nov2012 - 12:26:00	25.32
27Nov2012 - 12:27:00	25.33
27Nov2012 - 12:28:00	26.27
27Nov2012 - 12:29:00	26.54
27Nov2012 - 12:30:00	26.34
27Nov2012 - 12:31:00	24.9
27Nov2012 - 12:32:00	25.49
27Nov2012 - 12:33:00	23.96
27Nov2012 - 12:34:00	24.5
27Nov2012 - 12:35:00	24.93
27Nov2012 - 12:36:00	26.86
27Nov2012 - 12:37:00	25.64
27Nov2012 - 12:38:00	22.92
27Nov2012 - 12:39:00	19.47
27Nov2012 - 12:40:00	18.66
27Nov2012 - 12:41:00	15.12
27Nov2012 - 12:42:00	12
27Nov2012 - 12:43:00	10.84
27Nov2012 - 12:44:00	13
27Nov2012 - 12:45:00	14.45
27Nov2012 - 12:46:00	13.06
27Nov2012 - 12:47:00	15.9
27Nov2012 - 12:48:00	15.73
27Nov2012 - 12:49:00	15.17
27Nov2012 - 12:50:00	15.78
27Nov2012 - 12:51:00	16.05
27Nov2012 - 12:52:00	14.92
27Nov2012 - 12:53:00	14.26
27Nov2012 - 12:54:00	15.78
27Nov2012 - 12:55:00	15.45
27Nov2012 - 12:56:00	15.49
27Nov2012 - 12:57:00	95.77
27Nov2012 - 12:58:00	224.88
27Nov2012 - 12:59:00	223.87
27Nov2012 - 13:00:00	198.94
27Nov2012 - 13:01:00	20.42
27Nov2012 - 13:02:00	17.57
27Nov2012 - 13:03:00	18.82
27Nov2012 - 13:04:00	17.8
27Nov2012 - 13:05:00	16.73
27Nov2012 - 13:06:00	12.7
27Nov2012 - 13:07:00	10.12
27Nov2012 - 13:08:00	9.77
27Nov2012 - 13:09:00	14.72
27Nov2012 - 13:10:00	14.17
27Nov2012 - 13:11:00	15.2
27Nov2012 - 13:12:00	14.13
27Nov2012 - 13:13:00	11.21
27Nov2012 - 13:14:00	10.46
27Nov2012 - 13:15:00	8.09
27Nov2012 - 13:16:00	8.18
27Nov2012 - 13:17:00	5.14
27Nov2012 - 13:18:00	8.92

27Nov2012 - 13:19:00	12.71
27Nov2012 - 13:20:00	11.35
27Nov2012 - 13:21:00	11.15
27Nov2012 - 13:22:00	11.44
27Nov2012 - 13:23:00	12.9
27Nov2012 - 13:24:00	11.67
27Nov2012 - 13:25:00	11.28
27Nov2012 - 13:26:00	10.37
27Nov2012 - 13:27:00	10.7
27Nov2012 - 13:28:00	11.34
27Nov2012 - 13:29:00	10.86
27Nov2012 - 13:30:00	11.57
27Nov2012 - 13:31:00	15.01
27Nov2012 - 13:32:00	16.61
27Nov2012 - 13:33:00	15.42
27Nov2012 - 13:34:00	19.97
27Nov2012 - 13:35:00	18.35
27Nov2012 - 13:36:00	18.53
27Nov2012 - 13:37:00	17.88
27Nov2012 - 13:38:00	19.37
27Nov2012 - 13:39:00	19.44
27Nov2012 - 13:40:00	20.57
27Nov2012 - 13:41:00	22.05
27Nov2012 - 13:42:00	22.78
27Nov2012 - 13:43:00	22.18
27Nov2012 - 13:44:00	21.81
27Nov2012 - 13:45:00	21.49
27Nov2012 - 13:46:00	20.77
27Nov2012 - 13:47:00	29.67
27Nov2012 - 13:48:00	20.78
27Nov2012 - 13:49:00	21.22
27Nov2012 - 13:50:00	20.1
27Nov2012 - 13:51:00	19.27
27Nov2012 - 13:52:00	20.95
27Nov2012 - 13:53:00	18.33
27Nov2012 - 13:54:00	18.11
27Nov2012 - 13:55:00	21.05
27Nov2012 - 13:56:00	22.81
27Nov2012 - 13:57:00	24.66
27Nov2012 - 13:58:00	32.72
27Nov2012 - 13:59:00	54.22
27Nov2012 - 14:00:00	61.44
27Nov2012 - 14:01:00	55.97
27Nov2012 - 14:02:00	47.75
27Nov2012 - 14:03:00	44.22
27Nov2012 - 14:04:00	40.29
27Nov2012 - 14:05:00	36.78
27Nov2012 - 14:06:00	33.14
27Nov2012 - 14:07:00	31.71
27Nov2012 - 14:08:00	41.93
27Nov2012 - 14:09:00	55.13
27Nov2012 - 14:10:00	57.13
27Nov2012 - 14:11:00	52.37
27Nov2012 - 14:12:00	44.94
27Nov2012 - 14:13:00	57.64
27Nov2012 - 14:14:00	62.89
27Nov2012 - 14:15:00	60.47
27Nov2012 - 14:16:00	55.46
27Nov2012 - 14:17:00	56.02
27Nov2012 - 14:18:00	60.56
27Nov2012 - 14:19:00	60.85

27Nov2012 - 14:20:00	55.88

END ROOM AIR 2

AVERAGES	**31.3**
27Nov2012 - 14:21:00	51.32
27Nov2012 - 14:22:00	209.23
27Nov2012 - 14:23:00	471.71
27Nov2012 - 14:24:00	449.7
27Nov2012 - 14:25:00	450.4
27Nov2012 - 14:26:00	42.22

START ROOM AIR 3

27Nov2012 - 14:27:00	40.1
27Nov2012 - 14:28:00	42.74
27Nov2012 - 14:29:00	39.39
27Nov2012 - 14:30:00	38.9
27Nov2012 - 14:31:00	34.34
27Nov2012 - 14:32:00	31.58
27Nov2012 - 14:33:00	30.38
27Nov2012 - 14:34:00	29.48
27Nov2012 - 14:35:00	29.86
27Nov2012 - 14:36:00	29.46
27Nov2012 - 14:37:00	25.74
27Nov2012 - 14:38:00	25.03
27Nov2012 - 14:39:00	25.09
27Nov2012 - 14:40:00	27.49
27Nov2012 - 14:41:00	31.15
27Nov2012 - 14:42:00	30.86
27Nov2012 - 14:43:00	27.54
27Nov2012 - 14:44:00	25.61
27Nov2012 - 14:45:00	23.86
27Nov2012 - 14:46:00	23.36
27Nov2012 - 14:47:00	20.17
27Nov2012 - 14:48:00	27.74
27Nov2012 - 14:49:00	27.25
27Nov2012 - 14:50:00	25.15
27Nov2012 - 14:51:00	21.61
27Nov2012 - 14:52:00	20.26
27Nov2012 - 14:53:00	20.02
27Nov2012 - 14:54:00	20.37
27Nov2012 - 14:55:00	22.16
27Nov2012 - 14:56:00	23.11
27Nov2012 - 14:57:00	23.7
27Nov2012 - 14:58:00	22.67
27Nov2012 - 14:59:00	22.14
27Nov2012 - 15:00:00	20.98
27Nov2012 - 15:01:00	20.17
27Nov2012 - 15:02:00	15.83
27Nov2012 - 15:03:00	15.14
27Nov2012 - 15:04:00	17.82
27Nov2012 - 15:05:00	17.66
27Nov2012 - 15:06:00	20.61
27Nov2012 - 15:07:00	25.97
27Nov2012 - 15:08:00	32.98
27Nov2012 - 15:09:00	36.07
27Nov2012 - 15:10:00	32.59
27Nov2012 - 15:11:00	27.52
27Nov2012 - 15:12:00	23.4
27Nov2012 - 15:13:00	20.17

27Nov2012 - 15:14:00	16.64
27Nov2012 - 15:15:00	15.52
27Nov2012 - 15:16:00	15.79
27Nov2012 - 15:17:00	17.1
27Nov2012 - 15:18:00	16.58
27Nov2012 - 15:19:00	17.61
27Nov2012 - 15:20:00	14.92
27Nov2012 - 15:21:00	14.8
27Nov2012 - 15:22:00	16.85
27Nov2012 - 15:23:00	22.23
27Nov2012 - 15:24:00	21.13
27Nov2012 - 15:25:00	20.98
27Nov2012 - 15:26:00	20.03
27Nov2012 - 15:27:00	19.61
27Nov2012 - 15:28:00	20.06
27Nov2012 - 15:29:00	19.44
27Nov2012 - 15:30:00	18.65
27Nov2012 - 15:31:00	19.49
27Nov2012 - 15:32:00	18.39
27Nov2012 - 15:33:00	18.26
27Nov2012 - 15:34:00	17.91
27Nov2012 - 15:35:00	17.55
27Nov2012 - 15:36:00	18.13
27Nov2012 - 15:37:00	20.83
27Nov2012 - 15:38:00	22.42
27Nov2012 - 15:39:00	23.08
27Nov2012 - 15:40:00	23.04
27Nov2012 - 15:41:00	24.05
27Nov2012 - 15:42:00	25.83
27Nov2012 - 15:43:00	25.74
27Nov2012 - 15:44:00	27.09
27Nov2012 - 15:45:00	27.29
27Nov2012 - 15:46:00	27
27Nov2012 - 15:47:00	25.83
27Nov2012 - 15:48:00	25.92
27Nov2012 - 15:49:00	27.42
27Nov2012 - 15:50:00	25.83
27Nov2012 - 15:51:00	26.28
27Nov2012 - 15:52:00	27.09
27Nov2012 - 15:53:00	25.09
27Nov2012 - 15:54:00	26.72
27Nov2012 - 15:55:00	26.17
27Nov2012 - 15:56:00	24.94
27Nov2012 - 15:57:00	25.57
27Nov2012 - 15:58:00	22.92
27Nov2012 - 15:59:00	22.19
27Nov2012 - 16:00:00	21.15
27Nov2012 - 16:01:00	22.69
27Nov2012 - 16:02:00	37.92
27Nov2012 - 16:03:00	44.96
27Nov2012 - 16:04:00	42.54
27Nov2012 - 16:05:00	35.12
27Nov2012 - 16:06:00	30.08
27Nov2012 - 16:07:00	27.63
27Nov2012 - 16:08:00	25.87
27Nov2012 - 16:09:00	24.38
27Nov2012 - 16:10:00	28.08
27Nov2012 - 16:11:00	38.64
27Nov2012 - 16:12:00	44.71
27Nov2012 - 16:13:00	42.28
27Nov2012 - 16:14:00	39.2

27Nov2012 - 16:15:00	44.25
27Nov2012 - 16:16:00	47.96
27Nov2012 - 16:17:00	45.64
27Nov2012 - 16:18:00	42.58
27Nov2012 - 16:19:00	43.28
27Nov2012 - 16:20:00	46.58
27Nov2012 - 16:21:00	44.46
27Nov2012 - 16:22:00	39.79
27Nov2012 - 16:23:00	36.97
27Nov2012 - 16:24:00	35.61
27Nov2012 - 16:25:00	33.36
27Nov2012 - 16:26:00	31.85
27Nov2012 - 16:27:00	40.88
27Nov2012 - 16:28:00	46.56
27Nov2012 - 16:29:00	39.07
27Nov2012 - 16:30:00	34.32
27Nov2012 - 16:31:00	32.63
27Nov2012 - 16:32:00	30.38
27Nov2012 - 16:33:00	28.4
27Nov2012 - 16:34:00	29.3
27Nov2012 - 16:35:00	29.02
27Nov2012 - 16:36:00	27.39
27Nov2012 - 16:37:00	28.9
27Nov2012 - 16:38:00	32.17
27Nov2012 - 16:39:00	32.46
27Nov2012 - 16:40:00	29.04
27Nov2012 - 16:41:00	28.73
27Nov2012 - 16:42:00	26.27
27Nov2012 - 16:43:00	23.84
27Nov2012 - 16:44:00	22.18
27Nov2012 - 16:45:00	21.21
27Nov2012 - 16:46:00	19.1
27Nov2012 - 16:47:00	18.34
27Nov2012 - 16:48:00	17.98
27Nov2012 - 16:49:00	18.95
27Nov2012 - 16:50:00	18.49
27Nov2012 - 16:51:00	18.31
27Nov2012 - 16:52:00	17.22
27Nov2012 - 16:53:00	16.95
27Nov2012 - 16:54:00	15.48
27Nov2012 - 16:55:00	12.01
27Nov2012 - 16:56:00	20.03
27Nov2012 - 16:57:00	19.26
27Nov2012 - 16:58:00	24.48
27Nov2012 - 16:59:00	31.89
27Nov2012 - 17:00:00	26.52

END ROOM AIR 3

AVERAGES	**26.7**

27Nov2012 - 17:01:00	23.32
27Nov2012 - 17:02:00	407.86
27Nov2012 - 17:03:00	450.13
27Nov2012 - 17:04:00	177.2
27Nov2012 - 17:05:00	-8.87
27Nov2012 - 17:06:00	11.74
27Nov2012 - 17:07:00	25.01
27Nov2012 - 17:08:00	23.75
27Nov2012 - 17:09:00	22.91

START ROOM AIR 4

27Nov2012 - 17:10:00	20.97
27Nov2012 - 17:11:00	20.51
27Nov2012 - 17:12:00	18.94
27Nov2012 - 17:13:00	17.69
27Nov2012 - 17:14:00	15.73
27Nov2012 - 17:15:00	14.68
27Nov2012 - 17:16:00	13.97
27Nov2012 - 17:17:00	13.97
27Nov2012 - 17:18:00	14.25
27Nov2012 - 17:19:00	16.82
27Nov2012 - 17:20:00	18.16
27Nov2012 - 17:21:00	18.98
27Nov2012 - 17:22:00	18.02
27Nov2012 - 17:23:00	16.91
27Nov2012 - 17:24:00	17.19
27Nov2012 - 17:25:00	16.28
27Nov2012 - 17:26:00	13.66
27Nov2012 - 17:27:00	11.97
27Nov2012 - 17:28:00	16.08
27Nov2012 - 17:29:00	14.52
27Nov2012 - 17:30:00	15.87
27Nov2012 - 17:31:00	14.98
27Nov2012 - 17:32:00	16.54
27Nov2012 - 17:33:00	17.55
27Nov2012 - 17:34:00	18.56
27Nov2012 - 17:35:00	19.62
27Nov2012 - 17:36:00	20.86
27Nov2012 - 17:37:00	22.31
27Nov2012 - 17:38:00	22.43
27Nov2012 - 17:39:00	22.65
27Nov2012 - 17:40:00	20.37
27Nov2012 - 17:41:00	20.59
27Nov2012 - 17:42:00	20.47
27Nov2012 - 17:43:00	19.38
27Nov2012 - 17:44:00	20.2
27Nov2012 - 17:45:00	19.28
27Nov2012 - 17:46:00	18
27Nov2012 - 17:47:00	18.13
27Nov2012 - 17:48:00	16.08
27Nov2012 - 17:49:00	15.43
27Nov2012 - 17:50:00	14.25
27Nov2012 - 17:51:00	16.17
27Nov2012 - 17:52:00	17.53
27Nov2012 - 17:53:00	18.21
27Nov2012 - 17:54:00	46.47
27Nov2012 - 17:55:00	70.88
27Nov2012 - 17:56:00	73.79
27Nov2012 - 17:57:00	63.64
27Nov2012 - 17:58:00	51.67
27Nov2012 - 17:59:00	43.04
27Nov2012 - 18:00:00	39.97
27Nov2012 - 18:01:00	35.51
27Nov2012 - 18:02:00	32.2
27Nov2012 - 18:03:00	48.76
27Nov2012 - 18:04:00	68.42
27Nov2012 - 18:05:00	73.33
27Nov2012 - 18:06:00	68.34
27Nov2012 - 18:07:00	63.67
27Nov2012 - 18:08:00	69.6
27Nov2012 - 18:09:00	84.72

27Nov2012 - 18:10:00	90.56
27Nov2012 - 18:11:00	84.94
27Nov2012 - 18:12:00	81.23
27Nov2012 - 18:13:00	89.3
27Nov2012 - 18:14:00	92.37
27Nov2012 - 18:15:00	86.16
27Nov2012 - 18:16:00	77.08
27Nov2012 - 18:17:00	71.92
27Nov2012 - 18:18:00	68.39
27Nov2012 - 18:19:00	66.54
27Nov2012 - 18:20:00	60.81
27Nov2012 - 18:21:00	63.46
27Nov2012 - 18:22:00	72.84
27Nov2012 - 18:23:00	69.55
27Nov2012 - 18:24:00	56.87
27Nov2012 - 18:25:00	51.16
27Nov2012 - 18:26:00	47.86
27Nov2012 - 18:27:00	46.3
27Nov2012 - 18:28:00	46.11
27Nov2012 - 18:29:00	44.12
27Nov2012 - 18:30:00	43.42
27Nov2012 - 18:31:00	41.25
27Nov2012 - 18:32:00	38.18
27Nov2012 - 18:33:00	38.12
27Nov2012 - 18:34:00	48.08
27Nov2012 - 18:35:00	50.27
27Nov2012 - 18:36:00	48.77
27Nov2012 - 18:37:00	44.34
27Nov2012 - 18:38:00	41.55
27Nov2012 - 18:39:00	41.1
27Nov2012 - 18:40:00	35.68
27Nov2012 - 18:41:00	33.03
27Nov2012 - 18:42:00	29.93
27Nov2012 - 18:43:00	28.55
27Nov2012 - 18:44:00	26.42
27Nov2012 - 18:45:00	24.23
27Nov2012 - 18:46:00	22.83
27Nov2012 - 18:47:00	21.78
27Nov2012 - 18:48:00	19.74
27Nov2012 - 18:49:00	22.42
27Nov2012 - 18:50:00	24.78
27Nov2012 - 18:51:00	26.5
27Nov2012 - 18:52:00	26.91
27Nov2012 - 18:53:00	27.56
27Nov2012 - 18:54:00	26.28
27Nov2012 - 18:55:00	23.93
27Nov2012 - 18:56:00	21.69
27Nov2012 - 18:57:00	18.42
27Nov2012 - 18:58:00	16.16
27Nov2012 - 18:59:00	15.16
27Nov2012 - 19:00:00	19.45
27Nov2012 - 19:01:00	26
27Nov2012 - 19:02:00	32.16
27Nov2012 - 19:03:00	41.25
27Nov2012 - 19:04:00	39.55
27Nov2012 - 19:05:00	35.47
27Nov2012 - 19:06:00	32.36
27Nov2012 - 19:07:00	28.09
27Nov2012 - 19:08:00	23.19
27Nov2012 - 19:09:00	20.3
27Nov2012 - 19:10:00	18.81

27Nov2012 - 19:11:00	18.82
27Nov2012 - 19:12:00	18.29
27Nov2012 - 19:13:00	16.67
27Nov2012 - 19:14:00	14.58
27Nov2012 - 19:15:00	12.66
27Nov2012 - 19:16:00	11.23
27Nov2012 - 19:17:00	9.81
27Nov2012 - 19:18:00	9.77
27Nov2012 - 19:19:00	8.95
27Nov2012 - 19:20:00	8.43
27Nov2012 - 19:21:00	7.61
27Nov2012 - 19:22:00	7.76
27Nov2012 - 19:23:00	6.94
27Nov2012 - 19:24:00	7.23
27Nov2012 - 19:25:00	5.97
27Nov2012 - 19:26:00	6.37
27Nov2012 - 19:27:00	5.71
27Nov2012 - 19:28:00	5.36
27Nov2012 - 19:29:00	5.59
27Nov2012 - 19:30:00	4.7
27Nov2012 - 19:31:00	4.45
27Nov2012 - 19:32:00	4.05
27Nov2012 - 19:33:00	3.68
27Nov2012 - 19:34:00	3.43
27Nov2012 - 19:35:00	3.5
27Nov2012 - 19:36:00	3.41
27Nov2012 - 19:37:00	2.67
27Nov2012 - 19:38:00	3.08
27Nov2012 - 19:39:00	2.69
27Nov2012 - 19:40:00	1.24
27Nov2012 - 19:41:00	1.56
27Nov2012 - 19:42:00	1.24
27Nov2012 - 19:43:00	0.66
27Nov2012 - 19:44:00	0.74
27Nov2012 - 19:45:00	0.55
27Nov2012 - 19:46:00	0.52
27Nov2012 - 19:47:00	-0.12
27Nov2012 - 19:48:00	0.14
27Nov2012 - 19:49:00	0.23
27Nov2012 - 19:50:00	3.04
27Nov2012 - 19:51:00	2.26
27Nov2012 - 19:52:00	2.65
27Nov2012 - 19:53:00	3.34
27Nov2012 - 19:54:00	5.53
27Nov2012 - 19:55:00	7.13
27Nov2012 - 19:56:00	8.76
27Nov2012 - 19:57:00	7.15
27Nov2012 - 19:58:00	5.77
27Nov2012 - 19:59:00	4.98
27Nov2012 - 20:00:00	4.43
27Nov2012 - 20:01:00	3.72
27Nov2012 - 20:02:00	3.32
27Nov2012 - 20:03:00	3.41
27Nov2012 - 20:04:00	3.03
27Nov2012 - 20:05:00	3.34
27Nov2012 - 20:06:00	2.56
27Nov2012 - 20:07:00	2.87
27Nov2012 - 20:08:00	2.09
27Nov2012 - 20:09:00	2.4
27Nov2012 - 20:10:00	1.8
27Nov2012 - 20:11:00	0.71

27Nov2012 - 20:12:00	1.18
27Nov2012 - 20:13:00	0.99
27Nov2012 - 20:14:00	0.78
27Nov2012 - 20:15:00	0.83
27Nov2012 - 20:16:00	0.53
27Nov2012 - 20:17:00	0.3
27Nov2012 - 20:18:00	0.68
27Nov2012 - 20:19:00	0.24
27Nov2012 - 20:20:00	0.25
27Nov2012 - 20:21:00	0.1
27Nov2012 - 20:22:00	-0.54
27Nov2012 - 20:23:00	-0.93
27Nov2012 - 20:24:00	-0.25
27Nov2012 - 20:25:00	0.94
27Nov2012 - 20:26:00	0.74
27Nov2012 - 20:27:00	0.41
27Nov2012 - 20:28:00	11.24
27Nov2012 - 20:29:00	0.13
27Nov2012 - 20:30:00	0.88
END ROOM AIR 4	
AVERAGES	**23.1**
Daily Average	**26.4**
27Nov2012 - 20:31:00	1.89
27Nov2012 - 20:32:00	-0.03
27Nov2012 - 20:33:00	196.24
27Nov2012 - 20:34:00	451.29
27Nov2012 - 20:35:00	450.33
27Nov2012 - 20:36:00	34.04
27Nov2012 - 20:37:00	-0.06
27Nov2012 - 20:38:00	0.5
27Nov2012 - 20:39:00	1.48
27Nov2012 - 20:40:00	2.58
27Nov2012 - 20:41:00	3.08

Room Air -Shop Towels No Strip
G&K Services
Methods 1-4 Summary

Run No.	RA-1	RA-2	RA-3	RA-4	
Date:	27-Nov-12	27-Nov-12	27-Nov-12	27-Nov-12	
Start Time	8:00	11:12	14:27	17:10	
Stop Time	11:00	14:00	17:00	20:30	AVERAGES
Barometric Pressure, (inches of mercury)	29.99	29.99	29.99	29.99	29.99
Net Sampling Time, (minutes)	180.0	168.0	153.0	200.0	175.3
Wet Bulb Temp., (F)	50	58	56	59	56
Dry Bulb Temp., (F)	52	59	59	62	58
Calculated Saturation Constant	0.01218	0.01632	0.01519	0.01692	0.0152
Moisture, (percent)	1.1	1.6	1.4	1.6	1.4
Dry Mole Fraction	0.9886	0.9839	0.9858	0.9841	0.9856
CO_2 Concentration, (percent dry)	0.0	0.0	0.0	0.0	0.0
O_2 Concentration, (percent dry)	20.9	20.9	20.9	20.9	20.9
CO and N_2, (percent dry)	79.1	79.1	79.1	79.1	79.1
Dry Molecular Weight, (lb/lb mole)	28.84	28.84	28.84	28.84	28.84
Wet Molecular Weight, (lb/lb mole)	28.71	28.66	28.68	28.66	28.68
Excess Air at Stack, (percent)	-118750.0	-118750.0	-118750.0	-118750.0	-118750.0
Stack Area, (square inches)	452.4	452.4	452.4	452.4	452.4
Static Pressure, (inches of water)	-2.50	-2.40	-2.50	-2.50	-2.48
Stack Pressure, (inches of mercury)	29.81	29.81	29.81	29.81	29.81
Average Stack Temperature, (°F)	52	59	59	62	58
Average Sqroot of ΔP	1.0663	1.0635	1.0718	1.0671	1.0672
SDE Average	24.116	24.221	24.408	24.375	24.280
Pitot Coefficient	0.84	0.84	0.84	0.84	0.84
Stack Gas Velocity, (actual feet per minute - afpm)	3,552	3,570	3,597	3,593	3,578
Stack Flowrate, (actual cubic feet per minute - acfm)	11,160	11,217	11,301	11,289	11,242
Stack Flowrate, (standard cubic feet per minute - scfm)	11,476	11,378	11,462	11,381	11,424
Stack Flowrate, (dry standard cubic feet per minute - dscfm)	11,345	11,195	11,299	11,200	11,260

Method 2 Data Sheet

Room Vent 1

Plant: GTK
Location: Room Air Vent

Date: 11/27/12
Time: 0825

Stack Diameter: 24 "
Barometric Pressure, P_b: 29.99 "Hg
% Moisture: %H_2O
Static Pressure, P_g: -2.5 "H_2O
Pitot Coefficient, C_p: .84

Area, A: ft^2
Meter Temp.: °F
Stack O_2: %
Stack CO_2: %
MW (wet): lb/lb-mole

Port	Point	ΔP	$\sqrt{\Delta P}$	T_s (°F)	+ θ clockwise - θ counter-clockwise	$\sqrt{\Delta P}\cos\theta$	
1	1	1.3		50	0		
	2	1.4		51			
	3	1.4		51	+5		
	4	1.3		52			
	5	1.0		52	0		
	6	.95		52			
	7	.95		52	0		
	8	.90		52			
2	1	1.0		51	0		
	2	1.2		51			
	3	1.2		51	0		
	4	1.3		52			
	5	1.3		52	+1		
	6	1.1		52			
	7	1.0		52	+5		
	8	1.1		51			
		Dry bulb		50°			
	Average						

Average Absolute Temp.

Absolute Gas Temperature, $T_{ST} = T_S + 460°$

Absolute Gas Pressure, $P_S = P_b + P_g/13.6$ "Hg

Gas Velocity, $V_s = (85.49)\ C_p\ \sqrt{\Delta P}\,avg \sqrt{\frac{T_{ST}\,avg}{P_S\ M_W}}$ ft/sec

Actual Gas Flowrate, $Q_a = (V_s)\ (60)\ (A)$ ACFM

Standard Gas Flowrate, $Q_{std} = \left[\frac{528°R}{T_{ST}}\right]\left[\frac{P_S}{29.92}\right]\left[\frac{100 - \%H_2O}{100}\right]Q_a$ DSCFM

Room Air 2

Method 2 Data Sheet

Plant: G+K
Location: Room Air Vent

Date: 11/27/12
Time: 1115

Stack Diameter: 24 "
Barometric Pressure, P_b: _____ "Hg
% Moisture: _____ %H_2O
Static Pressure, P_g: -2.4 "H_2O
Pitot Coefficient, C_p: .84

Area, A: _____ ft^2
Meter Temp.: _____ °F
Stack O_2: _____ %
Stack CO_2: _____ %
MW (wet): _____ lb/lb-mole

Port	Point	ΔP	$\sqrt{\Delta P}$	T_S (°F)	+ θ clockwise - θ counter-clockwise	$\sqrt{\Delta P}\cos\theta$	
1	1	1.3		56			
	2	1.3		57			
	3	1.3		59			
	4	1.4		59			
	5	1.0		59			
	6	1.0		59			
	7	.93		59			
	8	.88		59			
2	1	1.0		57			
	2	1.2		58			
	3	1.2		58			
	4	1.3		59			
	5	1.3		60			
	6	1.2		60			
	7	1.0		60			
	8	.89		60			
			Wet bulb		58		
	Average						

Average Absolute Temp. _____

Absolute Gas Temperature, $T_{ST} = T_S + 460°$

Absolute Gas Pressure, $P_S = P_b + P_g/13.6$ _____ "Hg

Gas Velocity, $V_s = (85.49)\ C_p\ \sqrt{\Delta P}\,avg \sqrt{\frac{T_{ST}\,avg}{P_S\ M_W}}$ _____ ft/sec

Actual Gas Flowrate, $Q_a = (V_s)\ (60)\ (A)$ _____ ACFM

Standard Gas Flowrate, $Q_{std} = \left[\frac{528°R}{T_{ST}}\right]\left[\frac{P_S}{29.92}\right]\left[\frac{100 - \%H_2O}{100}\right]Q_a$ _____ DSCFM

Room Air
3

Method 2 Data Sheet

Plant G+K
Location Room Air Vent

Date 11/27/12
Time 1440

Stack Diameter	24	"	Area, A		ft^2
Barometric Pressure, P_b	2999	"Hg	Meter Temp.		°F
% Moisture		$\%H_2O$	Stack O_2		%
Static Pressure, P_g	-2.5	$"H_2O$	Stack CO_2		%
Pitot Coefficient, C_p	84		MW (wet)		lb/lb-mole

Port	Point	ΔP	$\sqrt{\Delta P}$	T_S (°F)	+ θ clockwise - θ counter-clockwise	$\sqrt{\Delta P}\cos\theta$	
1	1	1.05		55			
	2	1.30		57			
	3	1.30		57			
	4	1.30		57			
	5	1.40		57			
	6	1.05		58			
	7	.90		58			
	8	.84		58			
2	1	1.20		59			
	2	1.30		59			
	3	1.30		60			
	4	1.30		61			
	5	1.20		60			
	6	1.10		60			
	7	1.00		61			
	8	.94		61			
		wetbulb 56					
	Average						
		Average Absolute Temp.					

Absolute Gas Temperature, $T_{ST} = T_S + 460°$

Absolute Gas Pressure, $P_S = P_b + P_g/13.6$ _____ "Hg

Gas Velocity, $Vs = (85.49)\ Cp\ \sqrt{\Delta P}\ avg\ \sqrt{\frac{T_{ST}\ avg}{P_S\ M_W}}$ _____ ft/sec

Actual Gas Flowrate, $Qa = (V_s)\ (60)\ (A)$ _____ ACFM

Standard Gas Flowrate, $Q_{std} = \left[\frac{528°R}{T_{ST}}\right]\left[\frac{P_S}{29.92}\right]\left[\frac{100 - \%H_2O}{100}\right]Qa$ _____ DSCFM

Method 2 Data Sheet

Room Air #4

Plant G+K
Location Room Air Vent

Date 11/27/2012
Time 1720

Stack Diameter		"	Area, A		ft^2
Barometric Pressure, P_b	29.99	"Hg	Meter Temp.		°F
% Moisture		$\%H_2O$	Stack O_2		%
Static Pressure, P_g	-2.5	$"H_2O$	Stack CO_2		%
Pitot Coefficient, C_p	.84		MW (wet)		lb/lb-mole

Port	Point	ΔP	$\sqrt{\Delta P}$	T_s (°F)	+ θ clockwise - θ counter-clockwise	$\sqrt{\Delta P}\cos\theta$	
A	1	1.2		62			
	2	1.3		62			
	3	1.3		62			
	4	1.4		62			
	5	.95		62			
	6	.93		62			
	7	.86		62			
	8	1.1		62			
B	1	1.1		60			
	2	1.2		62			
	3	1.2		60			
	4	1.3		62			
	5	1.2		62			
	6	1.1		62			
	7	.96		62			
	8	1.2		62			
		wet bulb		59°			
	Average						

Average Absolute Temp. _____

Absolute Gas Temperature, $T_{ST} = T_S + 460°$

Absolute Gas Pressure, $P_S = P_b + P_g/13.6$ _____ "Hg

Gas Velocity, $V_s = (85.49)\ C_p\ \sqrt{\Delta P}\,avg \sqrt{\dfrac{T_{ST}\,avg}{P_S\ M_W}}$ _____ ft/sec

Actual Gas Flowrate, $Q_a = (V_s)\ (60)\ (A)$ _____ ACFM

Standard Gas Flowrate, $Q_{std} = \left[\dfrac{528°R}{T_{ST}}\right]\left[\dfrac{P_S}{29.92}\right]\left[\dfrac{100 - \%H_2O}{100}\right]Q_a$ _____ DSCFM

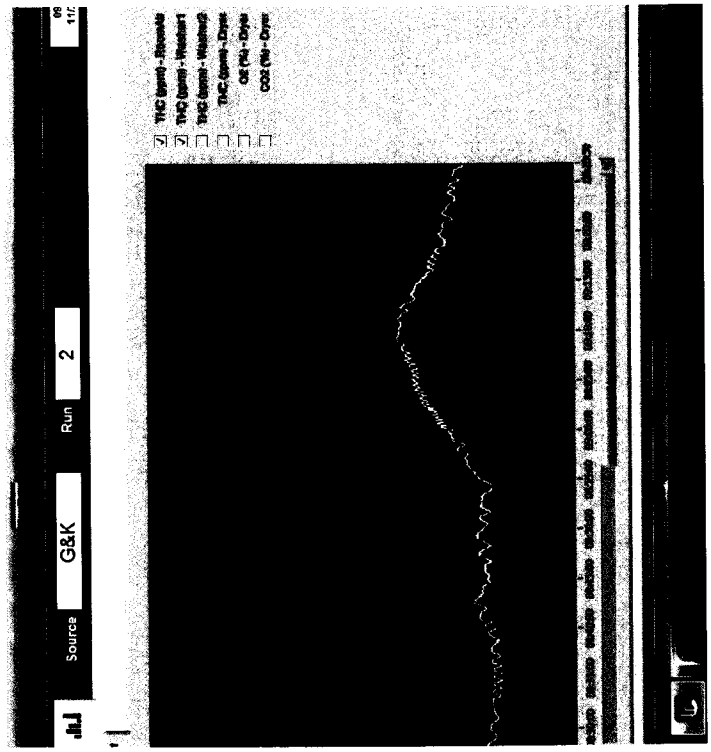
Source
G&K
Run
2

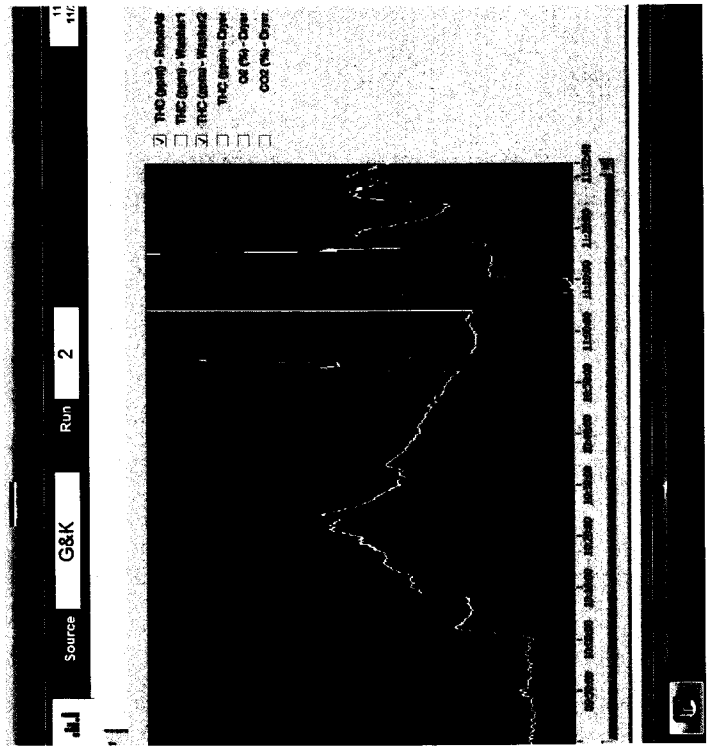

Cal on Room Air done at 11:05-11:10

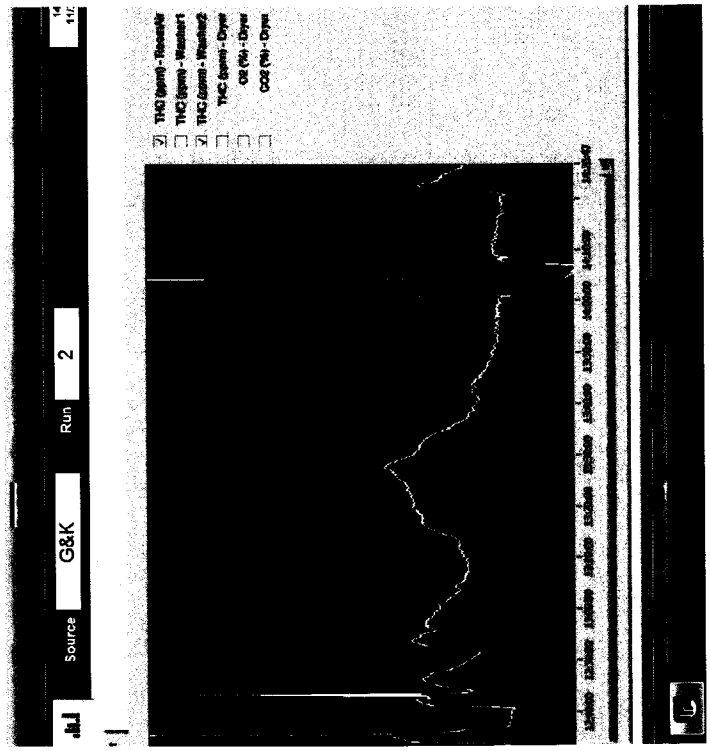
Source
G&K
Run
2
THC (ppm) - Rawstk
THC (ppm) - Washer1
THC (ppm) - Washer2
THC (ppm) - Dryer
O2 (%) - Dryer
CO2 (%) - Dryer

Shop Towel w/ Strip

CEM CALIBRATION DATA
EPA Method 25A

Firm:	G&K	Analyzer:	California Analytical
Location:	Manchester, NH	Span Value (S):	892
Operator	W Deveau	Analyzer Range:	3000
Sample Location:	Room Air Vent		
Date:	28-Nov-12		

TOTAL HYDROCARBONS

PRE-TEST Calibration Error Check:

	Cylinder ID	Cylinder Gas Conc. (Ca)	Analyzer Response (C)	Slope (m)	Predicted Response (pr)	Calibration Error (<5%) (ce)
Zero, C_O		0.0	0.03			
C_{low} (25-35% span)	CC112496	250.9	251.1	1.0010	251.1	0.0%
C_{mid} (45-55% span)	XC025800B	450.2	450.2	1.0010	450.6	-0.1%
C_{high} (80-90% span)	CC100940	892.0	892.9	1.0010	892.9	0.0%

Calibration Drift Check:

Run No:		1	2	3	4	AVG
Time						
Initial Zero	C_{OI}	0.0	-0.4	-1.5	-0.2	
Initial Span	C_{MI}	450.2	449.6	450.3	449.2	
Final Zero	C_{OF}	-0.4	-1.5	-0.2	-0.1	
Final Span	C_{MF}	449.6	450.3	449.2	464.1	
Calibration Drift (< 3%)	CD_O	0.0%	0.1%	-0.2%	0.0%	
Calibration Drift (< 3%)	CD_M	0.1%	-0.1%	0.1%	-1.7%	
THC Conc. (ppm, wet)	C_{THCavg}					

Nomenclature

C_{high}	Span gas analyzer response
C_O	Zero gas analyzer response
C_a	Cylinder gas value
C_{OI}	Initial calibration zero response
C_{OF}	Final calibration zero response
C_{MI}	Initial calibration upscale response
C_{MF}	Final calibration upscale response
CDo	Zero calibration drift
CDm	Upscale calibration drift
m	Slope
pr	Predicted response
ce	Calibration error
C	Analyzer response
S	Span
C_{NMHC}	Non-methane hydrocarbon concentration
C_{THC}	Total hydrocarbon concentration
C_{CH4}	Methane concentration

Calculations

$$m = (C_{high} - C_O) / C_a$$

$$pr = m \times C_a$$

$$ce = (C - pr) / C_a \times 100$$

$$CD_O = (C_{OI} - C_{OF}) / S$$

$$C_{NMHC} = C_{THC} - C_{CH4}$$

$$ER = C_{avg} \quad MW \quad 2.5962e\text{-}9 \quad Q \quad 60$$

where,

MW = molecular weight of methane, 16.04
2.5962e-9 = conversion from ppm to pounds per standard cubic feet.
60 = conversion from minutes to hour
Q = flow in units of standard cubic feet per minute

h:\stack\connecticut\projects\2012\g&k - manchester, nh\compliance testing\field data\nov 28 - shop towels with strip\[g&k - room air emissions - shop towels - 11-28-2012.xls]calibrations 12/13/112

Cylinder Gas	THC (ppm) RoomAir
Zero ID	
Zero Expiration	
Low ID	CC112496
Low Expiration	41530
Low Concentration	250.9
Mid ID	XC025800B
Mid Expiration	8/8/2015
Mid Concentration	450.2
High ID	CC100940
High Expiration	3/31/2013
High Concentration	892

Calibration Error	THC (ppm) RoomAir
Zero Response	0.03
Zero Error (%)	0
Low Response	251.13
Low Error (%)	0.09
Mid Response	450.23
Mid Error (%)	0.01
High Response	892.88
High Error (%)	0.1

Initial Bias	THC (ppm) RoomAir
Zero Response	0
Zero Bias (%)	0
Span Concentration	450.2
Span Response	0
Span Bias (%)	0

Shop Tank
w/ Strip

Log Averages	THC (ppm) RoomAir
START BASELINE	
28Nov2012 - 07:31:00	20.2
28Nov2012 - 07:32:00	20.01
28Nov2012 - 07:33:00	19.55
28Nov2012 - 07:34:00	19.42
28Nov2012 - 07:35:00	19.35
28Nov2012 - 07:36:00	18.35
28Nov2012 - 07:37:00	18.31
28Nov2012 - 07:38:00	17.91
28Nov2012 - 07:39:00	16.42
28Nov2012 - 07:40:00	18.62
28Nov2012 - 07:41:00	18.18
28Nov2012 - 07:42:00	17.68
28Nov2012 - 07:43:00	17.78
28Nov2012 - 07:44:00	17.91
28Nov2012 - 07:45:00	17.96
END BASELINE/ START ROOM AIR 1	
28Nov2012 - 07:46:00	19.73
28Nov2012 - 07:47:00	19.04
28Nov2012 - 07:48:00	19.49
28Nov2012 - 07:49:00	19.54
28Nov2012 - 07:50:00	19.26
28Nov2012 - 07:51:00	17.9
28Nov2012 - 07:52:00	18.25
28Nov2012 - 07:53:00	20.84
28Nov2012 - 07:54:00	21.31
28Nov2012 - 07:55:00	20.8
28Nov2012 - 07:56:00	20.57
28Nov2012 - 07:57:00	20.49
28Nov2012 - 07:58:00	20.54
28Nov2012 - 07:59:00	19.87
28Nov2012 - 08:00:00	19.3
28Nov2012 - 08:01:00	19.32
28Nov2012 - 08:02:00	19.26
28Nov2012 - 08:03:00	19.46
28Nov2012 - 08:04:00	20.09
28Nov2012 - 08:05:00	19.83
28Nov2012 - 08:06:00	20.17
28Nov2012 - 08:07:00	20.18
28Nov2012 - 08:08:00	19.61
28Nov2012 - 08:09:00	19.51
28Nov2012 - 08:10:00	19.62
28Nov2012 - 08:11:00	20.18
28Nov2012 - 08:12:00	19.7
28Nov2012 - 08:13:00	19.43
28Nov2012 - 08:14:00	19.47
28Nov2012 - 08:15:00	18.93
28Nov2012 - 08:16:00	19.06
28Nov2012 - 08:17:00	19.57
28Nov2012 - 08:18:00	18.72
28Nov2012 - 08:19:00	18.18
28Nov2012 - 08:20:00	18.46
28Nov2012 - 08:21:00	19.66
28Nov2012 - 08:22:00	19.59
28Nov2012 - 08:23:00	19.53

Washroom Exhaust Summaries

Time	Ave THC Conc	MW	(SCFM)	lb/hr
0745 - 1100	39.7	12	11445	0.85
1115 - 1400	61.6	12	11167	1.28
1415 - 1745	44.4	12	11046	0.92
1800 - 2100	35.7	12	11238	0.75
Daily Average	44.9	12	11224	0.94

28Nov2012 - 08:24:00	19.25
28Nov2012 - 08:25:00	19.51
28Nov2012 - 08:26:00	18.54
28Nov2012 - 08:27:00	19.06
28Nov2012 - 08:28:00	19.13
28Nov2012 - 08:29:00	20.27
28Nov2012 - 08:30:00	19.34
28Nov2012 - 08:31:00	19.48
28Nov2012 - 08:32:00	18.85
28Nov2012 - 08:33:00	19.5
28Nov2012 - 08:34:00	18.59
28Nov2012 - 08:35:00	18.42
28Nov2012 - 08:36:00	18.76
28Nov2012 - 08:37:00	18.91
28Nov2012 - 08:38:00	18.96
28Nov2012 - 08:39:00	18.82
28Nov2012 - 08:40:00	19.86
28Nov2012 - 08:41:00	20.83
28Nov2012 - 08:42:00	22.08
28Nov2012 - 08:43:00	22.72
28Nov2012 - 08:44:00	22.14
28Nov2012 - 08:45:00	20.92
28Nov2012 - 08:46:00	20.81
28Nov2012 - 08:47:00	20.77
28Nov2012 - 08:48:00	22.07
28Nov2012 - 08:49:00	20.85
28Nov2012 - 08:50:00	22.63
28Nov2012 - 08:51:00	21.22
28Nov2012 - 08:52:00	21.2
28Nov2012 - 08:53:00	21.94
28Nov2012 - 08:54:00	21.06
28Nov2012 - 08:55:00	20.19
28Nov2012 - 08:56:00	23.22
28Nov2012 - 08:57:00	25.04
28Nov2012 - 08:58:00	25.84
28Nov2012 - 08:59:00	27.03
28Nov2012 - 09:00:00	29.17
28Nov2012 - 09:01:00	30.83
28Nov2012 - 09:02:00	32.38
28Nov2012 - 09:03:00	34.55
28Nov2012 - 09:04:00	35.81
28Nov2012 - 09:05:00	37.13
28Nov2012 - 09:06:00	37.38
28Nov2012 - 09:07:00	38.14
28Nov2012 - 09:08:00	39.14
28Nov2012 - 09:09:00	40.35
28Nov2012 - 09:10:00	41.34
28Nov2012 - 09:11:00	40.77
28Nov2012 - 09:12:00	40.67
28Nov2012 - 09:13:00	39.57
28Nov2012 - 09:14:00	37.78
28Nov2012 - 09:15:00	36.99
28Nov2012 - 09:16:00	34.96
28Nov2012 - 09:17:00	33.57
28Nov2012 - 09:18:00	32.67
28Nov2012 - 09:19:00	31.04
28Nov2012 - 09:20:00	30.93
28Nov2012 - 09:21:00	30.61
28Nov2012 - 09:22:00	29.64
28Nov2012 - 09:23:00	29.51
28Nov2012 - 09:24:00	28.3

28Nov2012 - 09:25:00	28.65
28Nov2012 - 09:26:00	27.8
28Nov2012 - 09:27:00	27.13
28Nov2012 - 09:28:00	26.6
28Nov2012 - 09:29:00	26.39
28Nov2012 - 09:30:00	25.43
28Nov2012 - 09:31:00	25.47
28Nov2012 - 09:32:00	24.05
28Nov2012 - 09:33:00	23.69
28Nov2012 - 09:34:00	22.84
28Nov2012 - 09:35:00	22.59
28Nov2012 - 09:36:00	23.08
28Nov2012 - 09:37:00	22.16
28Nov2012 - 09:38:00	22.08
28Nov2012 - 09:39:00	21.77
28Nov2012 - 09:40:00	21.04
28Nov2012 - 09:41:00	21.22
28Nov2012 - 09:42:00	20.64
28Nov2012 - 09:43:00	19.6
28Nov2012 - 09:44:00	19.55
28Nov2012 - 09:45:00	19.49
28Nov2012 - 09:46:00	18.79
28Nov2012 - 09:47:00	19.91
28Nov2012 - 09:48:00	20.06
28Nov2012 - 09:49:00	20.05
28Nov2012 - 09:50:00	23.73
28Nov2012 - 09:51:00	23.51
28Nov2012 - 09:52:00	22
28Nov2012 - 09:53:00	20.83
28Nov2012 - 09:54:00	21.14
28Nov2012 - 09:55:00	21.39
28Nov2012 - 09:56:00	21.28
28Nov2012 - 09:57:00	21.74
28Nov2012 - 09:58:00	22.72
28Nov2012 - 09:59:00	21.21
28Nov2012 - 10:00:00	20.39
28Nov2012 - 10:01:00	21.67
28Nov2012 - 10:02:00	40.31
28Nov2012 - 10:03:00	54.74
28Nov2012 - 10:04:00	52.37
28Nov2012 - 10:05:00	50.3
28Nov2012 - 10:06:00	48.44
28Nov2012 - 10:07:00	49.18
28Nov2012 - 10:08:00	49.76
28Nov2012 - 10:09:00	55.85
28Nov2012 - 10:10:00	72.37
28Nov2012 - 10:11:00	76.44
28Nov2012 - 10:12:00	76.3
28Nov2012 - 10:13:00	76.93
28Nov2012 - 10:14:00	83.45
28Nov2012 - 10:15:00	87.9
28Nov2012 - 10:16:00	88.7
28Nov2012 - 10:17:00	88.49
28Nov2012 - 10:18:00	92.25
28Nov2012 - 10:19:00	96.73
28Nov2012 - 10:20:00	99.95
28Nov2012 - 10:21:00	103.95
28Nov2012 - 10:22:00	112.62
28Nov2012 - 10:23:00	113.02
28Nov2012 - 10:24:00	111.74
28Nov2012 - 10:25:00	116.39

28Nov2012 - 10:26:00	107.35	
28Nov2012 - 10:27:00	99.36	
28Nov2012 - 10:28:00	94.06	
28Nov2012 - 10:29:00	89.74	
28Nov2012 - 10:30:00	85.43	
28Nov2012 - 10:31:00	82.19	
28Nov2012 - 10:32:00	80.51	
28Nov2012 - 10:33:00	81.05	
28Nov2012 - 10:34:00	83.29	
28Nov2012 - 10:35:00	87.25	
28Nov2012 - 10:36:00	84.11	
28Nov2012 - 10:37:00	80.44	
28Nov2012 - 10:38:00	78.38	
28Nov2012 - 10:39:00	76.64	
28Nov2012 - 10:40:00	74.14	
28Nov2012 - 10:41:00	71.96	
28Nov2012 - 10:42:00	72.52	
28Nov2012 - 10:43:00	71.01	
28Nov2012 - 10:44:00	69.48	
28Nov2012 - 10:45:00	68.02	
28Nov2012 - 10:46:00	67.28	
28Nov2012 - 10:47:00	64.78	
28Nov2012 - 10:48:00	63.04	
28Nov2012 - 10:49:00	60.86	
28Nov2012 - 10:50:00	60.02	
28Nov2012 - 10:51:00	58.22	
28Nov2012 - 10:52:00	56.96	
28Nov2012 - 10:53:00	90.83	
28Nov2012 - 10:54:00	112.23	
28Nov2012 - 10:55:00	125.84	
28Nov2012 - 10:56:00	56.99	
28Nov2012 - 10:57:00	46.58	
28Nov2012 - 10:58:00	45.74	
28Nov2012 - 10:59:00	45.63	
28Nov2012 - 11:00:00	45.83	
END ROOM AIR 1		
AVERAGES	**39.7**	
28Nov2012 - 11:01:00	47.22	
28Nov2012 - 11:02:00	48.88	
28Nov2012 - 11:03:00	49.87	
28Nov2012 - 11:04:00	48.05	
28Nov2012 - 11:05:00	356.17	
28Nov2012 - 11:06:00	449.25	
28Nov2012 - 11:07:00	449.58	SPAN
28Nov2012 - 11:08:00	142.1	
28Nov2012 - 11:09:00	-0.41	ZERO
28Nov2012 - 11:10:00	1.53	
28Nov2012 - 11:11:00	22.54	
28Nov2012 - 11:12:00	38.91	
28Nov2012 - 11:13:00	38.91	
28Nov2012 - 11:14:00	37.82	
START ROOM AIR 2		
28Nov2012 - 11:15:00	42.35	
28Nov2012 - 11:16:00	163.92	
28Nov2012 - 11:17:00	65.27	
28Nov2012 - 11:18:00	53.93	
28Nov2012 - 11:19:00	94.25	

28Nov2012 - 11:20:00	99.56
28Nov2012 - 11:21:00	87.59
28Nov2012 - 11:22:00	74.67
28Nov2012 - 11:23:00	65.67
28Nov2012 - 11:24:00	60.9
28Nov2012 - 11:25:00	59.37
28Nov2012 - 11:26:00	79.25
28Nov2012 - 11:27:00	100.75
28Nov2012 - 11:28:00	101.94
28Nov2012 - 11:29:00	92.89
28Nov2012 - 11:30:00	91.42
28Nov2012 - 11:31:00	103.38
28Nov2012 - 11:32:00	95.98
28Nov2012 - 11:33:00	88.8
28Nov2012 - 11:34:00	83.68
28Nov2012 - 11:35:00	86.25
28Nov2012 - 11:36:00	88.48
28Nov2012 - 11:37:00	93.58
28Nov2012 - 11:38:00	90.02
28Nov2012 - 11:39:00	85.24
28Nov2012 - 11:40:00	80.46
28Nov2012 - 11:41:00	78.04
28Nov2012 - 11:42:00	76.55
28Nov2012 - 11:43:00	75.75
28Nov2012 - 11:44:00	73.81
28Nov2012 - 11:45:00	74.05
28Nov2012 - 11:46:00	81.36
28Nov2012 - 11:47:00	91.39
28Nov2012 - 11:48:00	92.61
28Nov2012 - 11:49:00	87.46
28Nov2012 - 11:50:00	84.33
28Nov2012 - 11:51:00	88.07
28Nov2012 - 11:52:00	85.89
28Nov2012 - 11:53:00	81.94
28Nov2012 - 11:54:00	77.69
28Nov2012 - 11:55:00	74.11
28Nov2012 - 11:56:00	71.73
28Nov2012 - 11:57:00	69.08
28Nov2012 - 11:58:00	65.34
28Nov2012 - 11:59:00	66.61
28Nov2012 - 12:00:00	65.3
28Nov2012 - 12:01:00	63.58
28Nov2012 - 12:02:00	61.31
28Nov2012 - 12:03:00	57.35
28Nov2012 - 12:04:00	53.05
28Nov2012 - 12:05:00	48.11
28Nov2012 - 12:06:00	44.86
28Nov2012 - 12:07:00	42.73
28Nov2012 - 12:08:00	39.96
28Nov2012 - 12:09:00	37.43
28Nov2012 - 12:10:00	39.38
28Nov2012 - 12:11:00	46.91
28Nov2012 - 12:12:00	48.45
28Nov2012 - 12:13:00	49.46
28Nov2012 - 12:14:00	51.5
28Nov2012 - 12:15:00	52.94
28Nov2012 - 12:16:00	49.49
28Nov2012 - 12:17:00	44.6
28Nov2012 - 12:18:00	43
28Nov2012 - 12:19:00	40.57
28Nov2012 - 12:20:00	38.8

28Nov2012 - 12:21:00	39.04
28Nov2012 - 12:22:00	38.57
28Nov2012 - 12:23:00	37.02
28Nov2012 - 12:24:00	35.96
28Nov2012 - 12:25:00	35.39
28Nov2012 - 12:26:00	34.04
28Nov2012 - 12:27:00	33.68
28Nov2012 - 12:28:00	32.47
28Nov2012 - 12:29:00	31.6
28Nov2012 - 12:30:00	30.69
28Nov2012 - 12:31:00	31.12
28Nov2012 - 12:32:00	30.69
28Nov2012 - 12:33:00	31.13
28Nov2012 - 12:34:00	37.27
28Nov2012 - 12:35:00	79.63
28Nov2012 - 12:36:00	127.3
28Nov2012 - 12:37:00	48.17
28Nov2012 - 12:38:00	31.02
28Nov2012 - 12:39:00	29.98
28Nov2012 - 12:40:00	29.9
28Nov2012 - 12:41:00	30.53
28Nov2012 - 12:42:00	68.32
28Nov2012 - 12:43:00	71.1
28Nov2012 - 12:44:00	81.17
28Nov2012 - 12:45:00	53.82
28Nov2012 - 12:46:00	66.88
28Nov2012 - 12:47:00	71.23
28Nov2012 - 12:48:00	67.29
28Nov2012 - 12:49:00	57.58
28Nov2012 - 12:50:00	52.25
28Nov2012 - 12:51:00	48.66
28Nov2012 - 12:52:00	45.48
28Nov2012 - 12:53:00	61.52
28Nov2012 - 12:54:00	73.86
28Nov2012 - 12:55:00	74.59
28Nov2012 - 12:56:00	69.62
28Nov2012 - 12:57:00	67.92
28Nov2012 - 12:58:00	69.97
28Nov2012 - 12:59:00	67.85
28Nov2012 - 13:00:00	65.49
28Nov2012 - 13:01:00	63.17
28Nov2012 - 13:02:00	62.07
28Nov2012 - 13:03:00	57.84
28Nov2012 - 13:04:00	54.65
28Nov2012 - 13:05:00	55.28
28Nov2012 - 13:06:00	52.55
28Nov2012 - 13:07:00	51.28
28Nov2012 - 13:08:00	50.17
28Nov2012 - 13:09:00	50.2
28Nov2012 - 13:10:00	50.39
28Nov2012 - 13:11:00	51.84
28Nov2012 - 13:12:00	53.35
28Nov2012 - 13:13:00	53.92
28Nov2012 - 13:14:00	54.69
28Nov2012 - 13:15:00	60.26
28Nov2012 - 13:16:00	66.94
28Nov2012 - 13:17:00	70.56
28Nov2012 - 13:18:00	71.28
28Nov2012 - 13:19:00	72.15
28Nov2012 - 13:20:00	74.56
28Nov2012 - 13:21:00	75.45

28Nov2012 - 13:22:00	75.96	
28Nov2012 - 13:23:00	77.01	
28Nov2012 - 13:24:00	78.26	
28Nov2012 - 13:25:00	79.06	
28Nov2012 - 13:26:00	82.21	
28Nov2012 - 13:27:00	84.65	
28Nov2012 - 13:28:00	87.37	
28Nov2012 - 13:29:00	86.51	
28Nov2012 - 13:30:00	80.17	
28Nov2012 - 13:31:00	74.67	
28Nov2012 - 13:32:00	72.76	
28Nov2012 - 13:33:00	71.43	
28Nov2012 - 13:34:00	68.68	
28Nov2012 - 13:35:00	63.58	
28Nov2012 - 13:36:00	58.58	
28Nov2012 - 13:37:00	53.82	
28Nov2012 - 13:38:00	49.95	
28Nov2012 - 13:39:00	48.12	
28Nov2012 - 13:40:00	46.83	
28Nov2012 - 13:41:00	44.97	
28Nov2012 - 13:42:00	45.77	
28Nov2012 - 13:43:00	47.75	
28Nov2012 - 13:44:00	46.8	
28Nov2012 - 13:45:00	46.03	
28Nov2012 - 13:46:00	43.83	
28Nov2012 - 13:47:00	42.16	
28Nov2012 - 13:48:00	40.66	
28Nov2012 - 13:49:00	39.35	
28Nov2012 - 13:50:00	37.98	
28Nov2012 - 13:51:00	37.66	
28Nov2012 - 13:52:00	36.6	
28Nov2012 - 13:53:00	35.55	
28Nov2012 - 13:54:00	35.77	
28Nov2012 - 13:55:00	36.05	
28Nov2012 - 13:56:00	35.69	
28Nov2012 - 13:57:00	35.98	
28Nov2012 - 13:58:00	35.37	
28Nov2012 - 13:59:00	35.82	
28Nov2012 - 14:00:00	34.84	
END ROOM AIR 2	**61.6**	
AVERAGES		
28Nov2012 - 14:01:00	34.47	
28Nov2012 - 14:02:00	372.31	
28Nov2012 - 14:03:00	450.13	
28Nov2012 - 14:04:00	450.25	SPAN
28Nov2012 - 14:05:00	202.86	
28Nov2012 - 14:06:00	0.48	
28Nov2012 - 14:07:00	-1.54	ZERO
28Nov2012 - 14:08:00	24.62	
28Nov2012 - 14:09:00	33.87	
28Nov2012 - 14:10:00	37.03	
28Nov2012 - 14:11:00	37.63	
28Nov2012 - 14:12:00	37.33	
28Nov2012 - 14:13:00	36.52	
28Nov2012 - 14:14:00	35.88	
START ROOM AIR 3		
28Nov2012 - 14:15:00	35.39	

28Nov2012 - 14:16:00	35.38
28Nov2012 - 14:17:00	35.08
28Nov2012 - 14:18:00	33.16
28Nov2012 - 14:19:00	33.32
28Nov2012 - 14:20:00	33.58
28Nov2012 - 14:21:00	33.43
28Nov2012 - 14:22:00	43.72
28Nov2012 - 14:23:00	69.86
28Nov2012 - 14:24:00	65.49
28Nov2012 - 14:25:00	61.33
28Nov2012 - 14:26:00	55.68
28Nov2012 - 14:27:00	50.79
28Nov2012 - 14:28:00	46.82
28Nov2012 - 14:29:00	46.41
28Nov2012 - 14:30:00	57.51
28Nov2012 - 14:31:00	63.93
28Nov2012 - 14:32:00	65.49
28Nov2012 - 14:33:00	63.43
28Nov2012 - 14:34:00	64.92
28Nov2012 - 14:35:00	65
28Nov2012 - 14:36:00	61.26
28Nov2012 - 14:37:00	59.85
28Nov2012 - 14:38:00	59.06
28Nov2012 - 14:39:00	57.72
28Nov2012 - 14:40:00	61.4
28Nov2012 - 14:41:00	61.25
28Nov2012 - 14:42:00	57.53
28Nov2012 - 14:43:00	52.03
28Nov2012 - 14:44:00	47.1
28Nov2012 - 14:45:00	43.99
28Nov2012 - 14:46:00	41.75
28Nov2012 - 14:47:00	40.56
28Nov2012 - 14:48:00	41.59
28Nov2012 - 14:49:00	40.83
28Nov2012 - 14:50:00	41.03
28Nov2012 - 14:51:00	40.68
28Nov2012 - 14:52:00	40.62
28Nov2012 - 14:53:00	40.11
28Nov2012 - 14:54:00	40.25
28Nov2012 - 14:55:00	42.72
28Nov2012 - 14:56:00	45.56
28Nov2012 - 14:57:00	45.48
28Nov2012 - 14:58:00	45.24
28Nov2012 - 14:59:00	44.69
28Nov2012 - 15:00:00	45.3
28Nov2012 - 15:01:00	42.94
28Nov2012 - 15:02:00	41.3
28Nov2012 - 15:03:00	42.77
28Nov2012 - 15:04:00	44.42
28Nov2012 - 15:05:00	45.39
28Nov2012 - 15:06:00	47.98
28Nov2012 - 15:07:00	51.85
28Nov2012 - 15:08:00	54.95
28Nov2012 - 15:09:00	56.19
28Nov2012 - 15:10:00	57.39
28Nov2012 - 15:11:00	57.39
28Nov2012 - 15:12:00	56.59
28Nov2012 - 15:13:00	54.8
28Nov2012 - 15:14:00	53.25
28Nov2012 - 15:15:00	52.52
28Nov2012 - 15:16:00	53.21

28Nov2012 - 15:17:00	54.74
28Nov2012 - 15:18:00	58.53
28Nov2012 - 15:19:00	57.88
28Nov2012 - 15:20:00	55.99
28Nov2012 - 15:21:00	54.55
28Nov2012 - 15:22:00	54.29
28Nov2012 - 15:23:00	52.51
28Nov2012 - 15:24:00	50.06
28Nov2012 - 15:25:00	47.87
28Nov2012 - 15:26:00	46.17
28Nov2012 - 15:27:00	44.47
28Nov2012 - 15:28:00	43.48
28Nov2012 - 15:29:00	41.15
28Nov2012 - 15:30:00	40.1
28Nov2012 - 15:31:00	38.8
28Nov2012 - 15:32:00	37.41
28Nov2012 - 15:33:00	35.65
28Nov2012 - 15:34:00	34.31
28Nov2012 - 15:35:00	34.13
28Nov2012 - 15:36:00	32.2
28Nov2012 - 15:37:00	30.86
28Nov2012 - 15:38:00	29.81
28Nov2012 - 15:39:00	29.53
28Nov2012 - 15:40:00	28.42
28Nov2012 - 15:41:00	28.6
28Nov2012 - 15:42:00	26.84
28Nov2012 - 15:43:00	26.72
28Nov2012 - 15:44:00	25.8
28Nov2012 - 15:45:00	25.99
28Nov2012 - 15:46:00	24.63
28Nov2012 - 15:47:00	24.25
28Nov2012 - 15:48:00	25.29
28Nov2012 - 15:49:00	24.06
28Nov2012 - 15:50:00	23.05
28Nov2012 - 15:51:00	23.16
28Nov2012 - 15:52:00	21.97
28Nov2012 - 15:53:00	23.69
28Nov2012 - 15:54:00	23.28
28Nov2012 - 15:55:00	23.95
28Nov2012 - 15:56:00	24.43
28Nov2012 - 15:57:00	22.73
28Nov2012 - 15:58:00	22.1
28Nov2012 - 15:59:00	23
28Nov2012 - 16:00:00	22.49
28Nov2012 - 16:01:00	23.05
28Nov2012 - 16:02:00	23.23
28Nov2012 - 16:03:00	24.91
28Nov2012 - 16:04:00	24.41
28Nov2012 - 16:05:00	23.63
28Nov2012 - 16:06:00	24.18
28Nov2012 - 16:07:00	23.92
28Nov2012 - 16:08:00	25.22
28Nov2012 - 16:09:00	24.59
28Nov2012 - 16:10:00	24.95
28Nov2012 - 16:11:00	24.97
28Nov2012 - 16:12:00	24.07
28Nov2012 - 16:13:00	31.45
28Nov2012 - 16:14:00	53.66
28Nov2012 - 16:15:00	59.19
28Nov2012 - 16:16:00	55.63
28Nov2012 - 16:17:00	47.73

28Nov2012 - 16:18:00	41.26
28Nov2012 - 16:19:00	37.07
28Nov2012 - 16:20:00	48.7
28Nov2012 - 16:21:00	61.54
28Nov2012 - 16:22:00	62.99
28Nov2012 - 16:23:00	57.21
28Nov2012 - 16:24:00	55.38
28Nov2012 - 16:25:00	56.69
28Nov2012 - 16:26:00	53.88
28Nov2012 - 16:27:00	51.18
28Nov2012 - 16:28:00	48.61
28Nov2012 - 16:29:00	47.51
28Nov2012 - 16:30:00	45.73
28Nov2012 - 16:31:00	44.71
28Nov2012 - 16:32:00	53.11
28Nov2012 - 16:33:00	58.76
28Nov2012 - 16:34:00	53.3
28Nov2012 - 16:35:00	48.96
28Nov2012 - 16:36:00	44.63
28Nov2012 - 16:37:00	43.52
28Nov2012 - 16:38:00	41.83
28Nov2012 - 16:39:00	40.93
28Nov2012 - 16:40:00	40.41
28Nov2012 - 16:41:00	43.14
28Nov2012 - 16:42:00	46.65
28Nov2012 - 16:43:00	48.13
28Nov2012 - 16:44:00	48.87
28Nov2012 - 16:45:00	48.89
28Nov2012 - 16:46:00	48.22
28Nov2012 - 16:47:00	48.17
28Nov2012 - 16:48:00	46.49
28Nov2012 - 16:49:00	46.66
28Nov2012 - 16:50:00	45.77
28Nov2012 - 16:51:00	45.16
28Nov2012 - 16:52:00	49.39
28Nov2012 - 16:53:00	49.91
28Nov2012 - 16:54:00	51.03
28Nov2012 - 16:55:00	51.69
28Nov2012 - 16:56:00	52.49
28Nov2012 - 16:57:00	51.57
28Nov2012 - 16:58:00	53.87
28Nov2012 - 16:59:00	53.17
28Nov2012 - 17:00:00	48.82
28Nov2012 - 17:01:00	45.81
28Nov2012 - 17:02:00	43.17
28Nov2012 - 17:03:00	38.98
28Nov2012 - 17:04:00	35.93
28Nov2012 - 17:05:00	34.83
28Nov2012 - 17:06:00	35.46
28Nov2012 - 17:07:00	34.13
28Nov2012 - 17:08:00	32.61
28Nov2012 - 17:09:00	34.12
28Nov2012 - 17:10:00	35.6
28Nov2012 - 17:11:00	34.73
28Nov2012 - 17:12:00	33.72
28Nov2012 - 17:13:00	40.13
28Nov2012 - 17:14:00	44.97
28Nov2012 - 17:15:00	48.5
28Nov2012 - 17:16:00	48.62
28Nov2012 - 17:17:00	48.29
28Nov2012 - 17:18:00	47.32

28Nov2012 - 17:19:00	47.4	
28Nov2012 - 17:20:00	46.69	
28Nov2012 - 17:21:00	44.42	
28Nov2012 - 17:22:00	44.25	
28Nov2012 - 17:23:00	43.7	
28Nov2012 - 17:24:00	42.53	
28Nov2012 - 17:25:00	43.89	
28Nov2012 - 17:26:00	46.14	
28Nov2012 - 17:27:00	49.06	
28Nov2012 - 17:28:00	56.31	
28Nov2012 - 17:29:00	62.35	
28Nov2012 - 17:30:00	70.49	
28Nov2012 - 17:31:00	76.13	
28Nov2012 - 17:32:00	70.88	
28Nov2012 - 17:33:00	63	
28Nov2012 - 17:34:00	57.9	
28Nov2012 - 17:35:00	56.68	
28Nov2012 - 17:36:00	53.65	
28Nov2012 - 17:37:00	52.63	
28Nov2012 - 17:38:00	52.13	
28Nov2012 - 17:39:00	51.72	
28Nov2012 - 17:40:00	51.15	
28Nov2012 - 17:41:00	50.16	
28Nov2012 - 17:42:00	48.9	
28Nov2012 - 17:43:00	47.12	
28Nov2012 - 17:44:00	44.91	
28Nov2012 - 17:45:00	43.58	
END ROOM AIR 3		
AVERAGES	**44.4**	
28Nov2012 - 17:46:00	228.03	
28Nov2012 - 17:47:00	449.22	SPAN
28Nov2012 - 17:48:00	449.2	
28Nov2012 - 17:49:00	17.43	
28Nov2012 - 17:50:00	-0.18	ZERO
28Nov2012 - 17:51:00	-0.13	
28Nov2012 - 17:52:00	25.56	
28Nov2012 - 17:53:00	37.15	
28Nov2012 - 17:54:00	38.13	
28Nov2012 - 17:55:00	37.89	
28Nov2012 - 17:56:00	38.15	
28Nov2012 - 17:57:00	36.84	
28Nov2012 - 17:58:00	35.74	
28Nov2012 - 17:59:00	34.91	
START ROOM AIR 4		
28Nov2012 - 18:00:00	34.24	
28Nov2012 - 18:01:00	34.69	
28Nov2012 - 18:02:00	33.96	
28Nov2012 - 18:03:00	33.77	
28Nov2012 - 18:04:00	32.79	
28Nov2012 - 18:05:00	32.35	
28Nov2012 - 18:06:00	31.8	
28Nov2012 - 18:07:00	30.73	
28Nov2012 - 18:08:00	43.17	
28Nov2012 - 18:09:00	89.02	
28Nov2012 - 18:10:00	30.38	
28Nov2012 - 18:11:00	29.88	
28Nov2012 - 18:12:00	37.05	

28Nov2012 - 18:13:00	85.19
28Nov2012 - 18:14:00	30.76
28Nov2012 - 18:15:00	28.18
28Nov2012 - 18:16:00	27.42
28Nov2012 - 18:17:00	28.56
28Nov2012 - 18:18:00	28.24
28Nov2012 - 18:19:00	26.79
28Nov2012 - 18:20:00	27.43
28Nov2012 - 18:21:00	27
28Nov2012 - 18:22:00	25.52
28Nov2012 - 18:23:00	26.19
28Nov2012 - 18:24:00	29.28
28Nov2012 - 18:25:00	64.77
28Nov2012 - 18:26:00	95.13
28Nov2012 - 18:27:00	92.11
28Nov2012 - 18:28:00	75.34
28Nov2012 - 18:29:00	60.57
28Nov2012 - 18:30:00	52.16
28Nov2012 - 18:31:00	65.35
28Nov2012 - 18:32:00	89.9
28Nov2012 - 18:33:00	94.6
28Nov2012 - 18:34:00	91.34
28Nov2012 - 18:35:00	87.42
28Nov2012 - 18:36:00	93.32
28Nov2012 - 18:37:00	89.21
28Nov2012 - 18:38:00	82.45
28Nov2012 - 18:39:00	81.48
28Nov2012 - 18:40:00	79.94
28Nov2012 - 18:41:00	72.12
28Nov2012 - 18:42:00	74.66
28Nov2012 - 18:43:00	79.67
28Nov2012 - 18:44:00	70.97
28Nov2012 - 18:45:00	63.79
28Nov2012 - 18:46:00	59.22
28Nov2012 - 18:47:00	56.71
28Nov2012 - 18:48:00	53.8
28Nov2012 - 18:49:00	51.57
28Nov2012 - 18:50:00	53.4
28Nov2012 - 18:51:00	62.63
28Nov2012 - 18:52:00	66.94
28Nov2012 - 18:53:00	65.79
28Nov2012 - 18:54:00	64.64
28Nov2012 - 18:55:00	65
28Nov2012 - 18:56:00	62.97
28Nov2012 - 18:57:00	59.02
28Nov2012 - 18:58:00	58.22
28Nov2012 - 18:59:00	58.92
28Nov2012 - 19:00:00	57.49
28Nov2012 - 19:01:00	57.28
28Nov2012 - 19:02:00	59.75
28Nov2012 - 19:03:00	60.99
28Nov2012 - 19:04:00	60.48
28Nov2012 - 19:05:00	57.6
28Nov2012 - 19:06:00	55.05
28Nov2012 - 19:07:00	51.84
28Nov2012 - 19:08:00	46.07
28Nov2012 - 19:09:00	41.01
28Nov2012 - 19:10:00	36.96
28Nov2012 - 19:11:00	33.56
28Nov2012 - 19:12:00	36.37
28Nov2012 - 19:13:00	53.88

28Nov2012 - 19:14:00	51.9
28Nov2012 - 19:15:00	47.41
28Nov2012 - 19:16:00	48.97
28Nov2012 - 19:17:00	51.81
28Nov2012 - 19:18:00	52.69
28Nov2012 - 19:19:00	51.59
28Nov2012 - 19:20:00	50.27
28Nov2012 - 19:21:00	48.96
28Nov2012 - 19:22:00	46.3
28Nov2012 - 19:23:00	44.88
28Nov2012 - 19:24:00	41.71
28Nov2012 - 19:25:00	37.51
28Nov2012 - 19:26:00	34.52
28Nov2012 - 19:27:00	31.51
28Nov2012 - 19:28:00	29.79
28Nov2012 - 19:29:00	52.81
28Nov2012 - 19:30:00	80.05
28Nov2012 - 19:31:00	96.99
28Nov2012 - 19:32:00	60.98
28Nov2012 - 19:33:00	30.67
28Nov2012 - 19:34:00	26.17
28Nov2012 - 19:35:00	25.56
28Nov2012 - 19:36:00	25.23
28Nov2012 - 19:37:00	23.82
28Nov2012 - 19:38:00	23.62
28Nov2012 - 19:39:00	22.3
28Nov2012 - 19:40:00	21.83
28Nov2012 - 19:41:00	21.29
28Nov2012 - 19:42:00	21.66
28Nov2012 - 19:43:00	21.94
28Nov2012 - 19:44:00	23.3
28Nov2012 - 19:45:00	25.92
28Nov2012 - 19:46:00	25.45
28Nov2012 - 19:47:00	24.07
28Nov2012 - 19:48:00	23.69
28Nov2012 - 19:49:00	23.67
28Nov2012 - 19:50:00	22.66
28Nov2012 - 19:51:00	21.77
28Nov2012 - 19:52:00	20.91
28Nov2012 - 19:53:00	20.47
28Nov2012 - 19:54:00	19.49
28Nov2012 - 19:55:00	17.79
28Nov2012 - 19:56:00	18.94
28Nov2012 - 19:57:00	17.48
28Nov2012 - 19:58:00	16.35
28Nov2012 - 19:59:00	17.11
28Nov2012 - 20:00:00	16.59
28Nov2012 - 20:01:00	17.14
28Nov2012 - 20:02:00	16.41
28Nov2012 - 20:03:00	15.67
28Nov2012 - 20:04:00	15.36
28Nov2012 - 20:05:00	15.7
28Nov2012 - 20:06:00	15.18
28Nov2012 - 20:07:00	14.93
28Nov2012 - 20:08:00	14.7
28Nov2012 - 20:09:00	14.89
28Nov2012 - 20:10:00	15.39
28Nov2012 - 20:11:00	13.69
28Nov2012 - 20:12:00	13.74
28Nov2012 - 20:13:00	14.24
28Nov2012 - 20:14:00	13.81

28Nov2012 - 20:15:00	14	
28Nov2012 - 20:16:00	13.65	
28Nov2012 - 20:17:00	13.09	
28Nov2012 - 20:18:00	12.95	
28Nov2012 - 20:19:00	13.83	
28Nov2012 - 20:20:00	13.12	
28Nov2012 - 20:21:00	13.15	
28Nov2012 - 20:22:00	12.96	
28Nov2012 - 20:23:00	12.45	
28Nov2012 - 20:24:00	12.52	
28Nov2012 - 20:25:00	12.2	
28Nov2012 - 20:26:00	12.96	
28Nov2012 - 20:27:00	10.99	
28Nov2012 - 20:28:00	12.27	
28Nov2012 - 20:29:00	14.95	
28Nov2012 - 20:30:00	17	
28Nov2012 - 20:31:00	15.32	
28Nov2012 - 20:32:00	14.82	
28Nov2012 - 20:33:00	13.91	
28Nov2012 - 20:34:00	14.02	
28Nov2012 - 20:35:00	13.04	
28Nov2012 - 20:36:00	13.28	
28Nov2012 - 20:37:00	11.41	
28Nov2012 - 20:38:00	12.44	
28Nov2012 - 20:39:00	11.98	
28Nov2012 - 20:40:00	11.96	
28Nov2012 - 20:41:00	11.69	
28Nov2012 - 20:42:00	12.51	
28Nov2012 - 20:43:00	12.47	
28Nov2012 - 20:44:00	12.2	
28Nov2012 - 20:45:00	10.78	
28Nov2012 - 20:46:00	11.02	
28Nov2012 - 20:47:00	11.11	
28Nov2012 - 20:48:00	12.04	
28Nov2012 - 20:49:00	11.17	
28Nov2012 - 20:50:00	12.15	
28Nov2012 - 20:51:00	11.5	
28Nov2012 - 20:52:00	11.28	
28Nov2012 - 20:53:00	12.05	
28Nov2012 - 20:54:00	11.51	
28Nov2012 - 20:55:00	11.26	
28Nov2012 - 20:56:00	11.77	
28Nov2012 - 20:57:00	11.44	
28Nov2012 - 20:58:00	10.91	
28Nov2012 - 20:59:00	10.54	
28Nov2012 - 21:00:00	10.11	
END ROOM AIR 4		
AVERAGES	**35.7**	
DAILY AVERAGE	**44.9**	
28Nov2012 - 21:01:00	10.39	
28Nov2012 - 21:02:00	9.53	
28Nov2012 - 21:03:00	10.04	
28Nov2012 - 21:04:00	10.52	
28Nov2012 - 21:05:00	464.07	SPAN
28Nov2012 - 21:06:00	451.02	
28Nov2012 - 21:07:00	379.57	
28Nov2012 - 21:08:00	-0.05	ZERO
28Nov2012 - 21:09:00	-0.04	

Room Air -Shop Towels With Strip
G&K Services
Methods 1-4 Summary

Run No.	RA-1	RA-2	RA-3	RA-4	
Date:	28-Nov-12	28-Nov-12	28-Nov-12	28-Nov-12	
Start Time	7:45	11:15	14:15	18:00	
Stop Time	11:00	14:00	17:45	21:00	AVERAGES
Barometric Pressure, (inches of mercury)	29.88	29.88	29.88	29.88	29.88
Net Sampling Time, (minutes)	195.0	165.0	210.0	180.0	187.5
Wet Bulb Temp., (F)	50	50	51	51	51
Dry Bulb Temp., (F)	56	62	65	60	61
Calculated Saturation Constant	0.01222	0.01222	0.01269	0.01269	0.0125
Moisture, (percent)	1.0	0.8	0.8	0.9	0.9
Dry Mole Fraction	0.9899	0.9922	0.9925	0.9908	0.9913
CO_2 Concentration, (percent dry)	0.0	0.0	0.0	0.0	0.0
O_2 Concentration, (percent dry)	20.9	20.9	20.9	20.9	20.9
CO and N_2, (percent dry)	79.1	79.1	79.1	79.1	79.1
Dry Molecular Weight, (lb/lb mole)	28.84	28.84	28.84	28.84	28.84
Wet Molecular Weight, (lb/lb mole)	28.73	28.75	28.75	28.74	28.74
Excess Air at Stack, (percent)	-118750.0	-118750.0	-118750.0	-118750.0	-118750.0
Stack Area, (square inches)	452.4	452.4	452.4	452.4	452.4
Static Pressure, (inches of water)	-2.30	-2.30	-2.30	-2.30	-2.30
Stack Pressure, (inches of mercury)	29.71	29.71	29.71	29.71	29.71
Average Stack Temperature, (°F)	56	62	65	60	61
Average Sqroot of ΔP	1.0699	1.0504	1.0422	1.0552	1.0544
SDE Average	24.299	23.996	23.878	24.068	24.060
Pitot Coefficient	0.84	0.84	0.84	0.84	0.84
Stack Gas Velocity, (actual feet per minute - afpm)	3,584	3,538	3,520	3,550	3,548
Stack Flowrate, (actual cubic feet per minute - acfm)	11,260	11,115	11,060	11,151	11,146
Stack Flowrate, (standard cubic feet per minute - scfm)	11,445	11,167	11,046	11,238	11,224
Stack Flowrate, (dry standard cubic feet per minute - dscfm)	11,330	11,079	10,963	11,134	11,127

Method 2 Data Sheet

Room Air 1

Plant: G+K
Location: Room Air Vent

Date: 11/28/12
Time: 0750

Stack Diameter: _____ "
Barometric Pressure, P_b: 29.88 "Hg
% Moisture: _____ %H_2O
Static Pressure, P_g: -2.3 "H_2O
Pitot Coefficient, C_p: .84

Area, A: _____ ft^2
Meter Temp.: _____ °F
Stack O_2: _____ %
Stack CO_2: _____ %
MW (wet): _____ lb/lb-mole

Port	Point	ΔP	$\sqrt{\Delta P}$	T_S (°F)	+ θ clockwise - θ counter-clockwise	$\sqrt{\Delta P}\cos\theta$	
1	1	1.4		55			
	2	1.4		56			
	3	1.3		56			
	4	1.4		56			
	5	1.2		56			
	6	1.0		56			
	7	0.79		56			
	8	0.81		55			
2	1	1.1		55			
	2	1.2		56			
	3	1.2		56			
	4	1.3		56			
	5	1.2		56			
	6	1.1		56			
	7	1.05		56			
	8	0.99		56			
			wet bulb		50°		
	Average						

Average Absolute Temp. _____

Absolute Gas Temperature, $T_{ST} = T_S + 460°$

Absolute Gas Pressure, $P_S = P_b + P_g/13.6$ _____ "Hg

Gas Velocity, $V_s = (85.49)\ C_p\ \sqrt{\Delta P}\,avg\ \sqrt{\frac{T_{ST}\,avg}{P_S\ M_W}}$ _____ ft/sec

Actual Gas Flowrate, $Q_a = (V_s)\ (60)\ (A)$ _____ ACFM

Standard Gas Flowrate, $Q_{std} = \left[\frac{528°R}{T_{ST}}\right]\left[\frac{P_S}{29.92}\right]\left[\frac{100 - \%H_2O}{100}\right]Q_a$ _____ DSCFM

Room Air
2

Method 2 Data Sheet

Plant: G+K
Location: Room Air Vent

Date: 11/28/12
Time: 1120

Stack Diameter	24	"	Area, A		ft^2
Barometric Pressure, P_b	29.88	"Hg	Meter Temp.		°F
% Moisture		$\%H_2O$	Stack O_2		%
Static Pressure, P_g	-2.3	$"H_2O$	Stack CO_2		%
Pitot Coefficient, C_p	.84		MW (wet)		lb/lb-mole

Port	Point	ΔP	$\sqrt{\Delta P}$	T_S (°F)	+ θ clockwise - θ counter-clockwise	$\sqrt{\Delta P}\cos\theta$	
1	1	1.1		72	62		
	2	1.3		72	62		
	3	1.3		62			
	4	1.3		62			
	5	1.05		62			
	6	.88		63			
	7	.75		62			
	8	.76		62			
2	1	1.05		60			
	2	1.2		61			
	3	1.32		62			
	4	1.33		62			
	5	1.33		62			
	6	1.3		62			
	7	1.0		62			
	8	1.0		62			
		wet bulb		50°			
	Average						

Average Absolute Temp.

Absolute Gas Temperature, $T_{ST} = T_S + 460°$

Absolute Gas Pressure, $P_S = P_b + P_g/13.6$ _____ "Hg

Gas Velocity, $V_s = (85.49)\ C_p\ \sqrt{\Delta P}\,avg \sqrt{\frac{T_{ST}\,avg}{P_S\ M_W}}$ _____ ft/sec

Actual Gas Flowrate, $Q_a = (V_s)\ (60)\ (A)$ _____ ACFM

Standard Gas Flowrate, $Q_{std} = \left[\frac{528°R}{T_{ST}}\right]\left[\frac{P_S}{29.92}\right]\left[\frac{100 - \%H_2O}{100}\right]Q_a$ _____ DSCFM

Method 2 Data Sheet

Room Air 3

Plant G+K
Location Room Air

Date 11/28/12
Time 1430

Stack Diameter 24 "
Barometric Pressure, P_b 29.88 "Hg
% Moisture _____ $\%H_2O$
Static Pressure, P_g -2.2 "H_2O
Pitot Coefficient, C_p 84

Area, A _____ ft^2
Meter Temp. _____ °F
Stack O_2 _____ %
Stack CO_2 _____ %
MW (wet) _____ lb/lb-mole

Port	Point	ΔP	$\sqrt{\Delta P}$	T_S (°F)	+ θ clockwise - θ counter-clockwise	$\sqrt{\Delta P}\cos\theta$	
1	1	1.0		62			
	2	1.2		64			
	3	1.3		65			
	4	1.3		65			
	5	1.0		65			
	6	.92		65			
	7	.81		65			
	8	.88		64			
2	1	1.1		63			
	2	1.3		64			
	3	1.3		65			
	4	1.3		65			
	5	1.2		66			
	6	1.05		67			
	7	.93		67			
	8	.90		67			
	wet bulb 51						
	Average						

Average Absolute Temp. _____

Absolute Gas Temperature, $T_{ST} = T_S + 460°$

Absolute Gas Pressure, $P_S = P_b + P_g/13.6$ _____ "Hg

Gas Velocity, $Vs = (85.49)\ Cp\ \sqrt{\Delta P}\ avg\ \sqrt{\frac{T_{ST}\ avg}{P_S\ M_W}}$ _____ ft/sec

Actual Gas Flowrate, $Qa = (V_s)\ (60)\ (A)$ _____ ACFM

Standard Gas Flowrate, $Q_{std} = \left[\frac{528°R}{T_{ST}}\right]\left[\frac{P_S}{29.92}\right]\left[\frac{100 - \%H_2O}{100}\right]Qa$ _____ DSCFM

Method 2 Data Sheet

Room Air 4

Plant: G+K
Location: Room Air Vent

Date: 11/28/12
Time: 1810

Stack Diameter	24	"	Area, A		ft^2
Barometric Pressure, P_b	29.88	"Hg	Meter Temp.		°F
% Moisture		$\%H_2O$	Stack O_2		%
Static Pressure, P_g	-2.3	$"H_2O$	Stack CO_2		%
Pitot Coefficient, C_p	.84		MW (wet)		lb/lb-mole

Port	Point	ΔP	$\sqrt{\Delta P}$	T_S (°F)	+ θ clockwise - θ counter-clockwise	$\sqrt{\Delta P}\cos\theta$	
1	1	1.1		59			
	2	1.2		59			
	3	1.2		59			
	4	1.2		60			
	5	1.3		61			
	6	0.91		60			
	7	0.83		60			
	8	0.80		60			
2	1	1.0		60			
	2	1.3		61			
	3	1.3		61			
	4	1.2		61			
	5	1.2		61			
	6	1.2		61			
	7	1.05		61			
	8	0.94		60			
			wet bulb		51		
	Average						

Average Absolute Temp.

Absolute Gas Temperature, $T_{ST} = T_S + 460°$

Absolute Gas Pressure, $P_S = P_b + P_g/13.6$ _____ "Hg

Gas Velocity, $V_s = (85.49)\ C_p\ \sqrt{\Delta P}\ avg \sqrt{\frac{T_{ST}\ avg}{P_S\ M_W}}$ _____ ft/sec

Actual Gas Flowrate, $Q_a = (V_s)\ (60)\ (A)$ _____ ACFM

Standard Gas Flowrate, $Q_{std} = \left[\frac{528°R}{T_{ST}}\right]\left[\frac{P_S}{29.92}\right]\left[\frac{100 - \%H_2O}{100}\right]Q_a$ _____ DSCFM

Shop Towels

EVACUATED CANISTER SAMPLING FORM

Client: G+K	Run Number: TO-15 - Room Air - 1
Location: Room Air Vent	Operator: R Potter
Process:	Sample ID:
Canister Number: 00557/SC00081	Flow Controller ID: FCS00074
Canister Leak Check Date: 1/28/12	Comments:

	Canister Vacuum		Barometric Pressure	Ambient Temperature
	Manometer (mmHg)	Gauge (inHg)	(mmHg)	~~(°C)~~
Pre-test		30.00	29.88	34°F
Post-test		12.66	29.88	45°F

Pretest Leak Rate	mmHg/10 minutes
	0.00
Post	0.00

Elapsed Time	Clock Time	Gauge Vacuum (inHg)	~~Flow Meter Setting (ml/min)~~	Comments
0	0800	30+	8hr flow controller	
60	0900	30		
120	1000	27.5		
180	1100	25.0	—	turned canister off for
240	1200	22.0		± 15 min while
300	1300	17.5		Room Air ~~location~~ was calibrated
360	1400	1		FID
~~420~~				

TRC

Shop Towels

EVACUATED CANISTER SAMPLING FORM

Client: G+K	Run Number: TO-15-Room Air-2
Location: Room Air Vent	Operator:
Process:	Sample ID:
Canister Number: 02208/SC01500	Flow Controller ID: FC50074
Canister Leak Check Date: 11/28/12	Comments:

	Canister Vacuum		Barometric Pressure (mmHg)	Ambient Temperature (°C)
	Manometer (mmHg)	Gauge (inHg)		
Pre-test		29.88	29.88	45
post		11.17	29.88	3

Pretest Leak Rate	mmHg/10 minutes
	0.00
post	~~0.00~~ 0.001

wrote down post leak check for run 1 on this sheet by mistake (RP)

Elapsed Time	Clock Time	Gauge Vacuum (inHg)	Flow Meter Setting (ml/min)	Comments
0	1430	30+	8 hr	flow controller
60	1530	30		
120	1630	27		
180	1730	25		
240	1830	23		
300	1930	19		
360	2030	15		
390	2100	12		

TRC

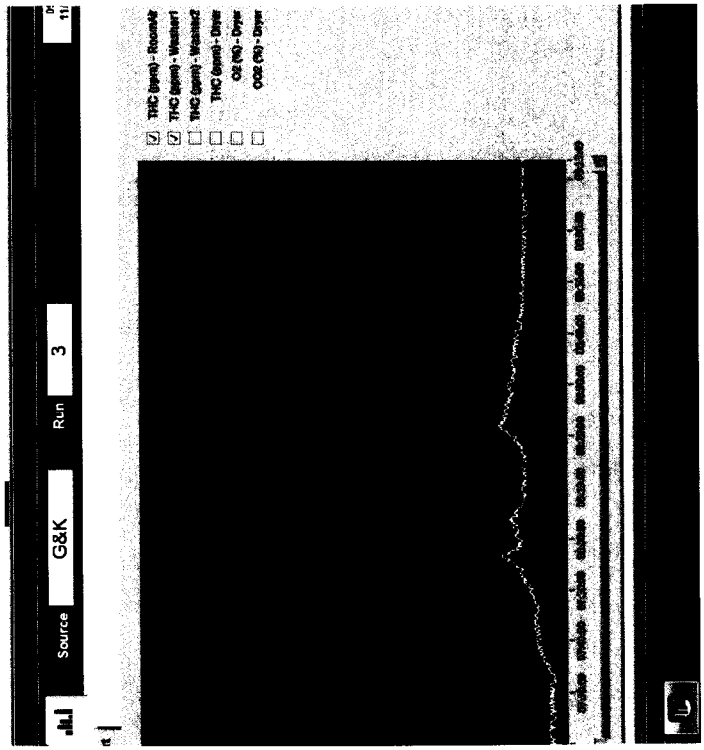

Room Air on 3000 scale

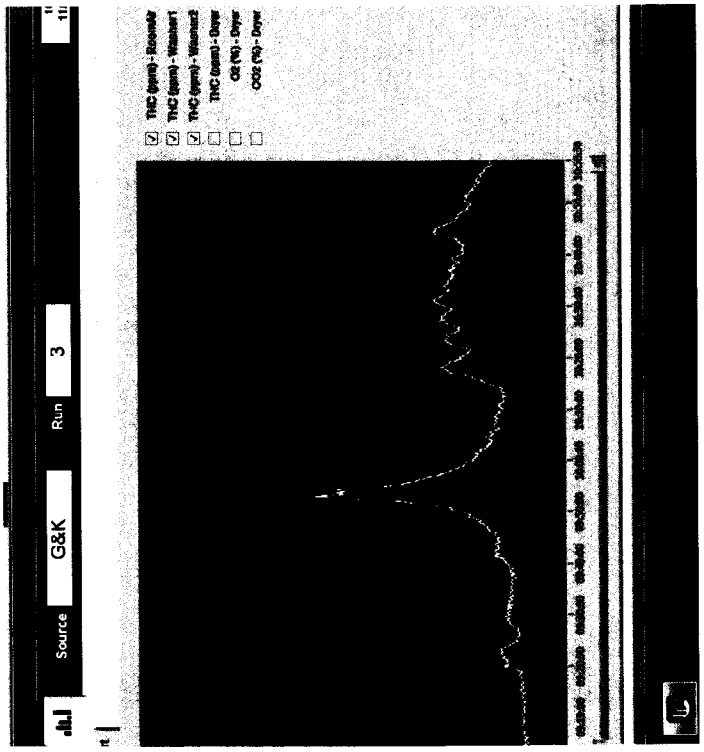

Washer 2 spike up to 7200

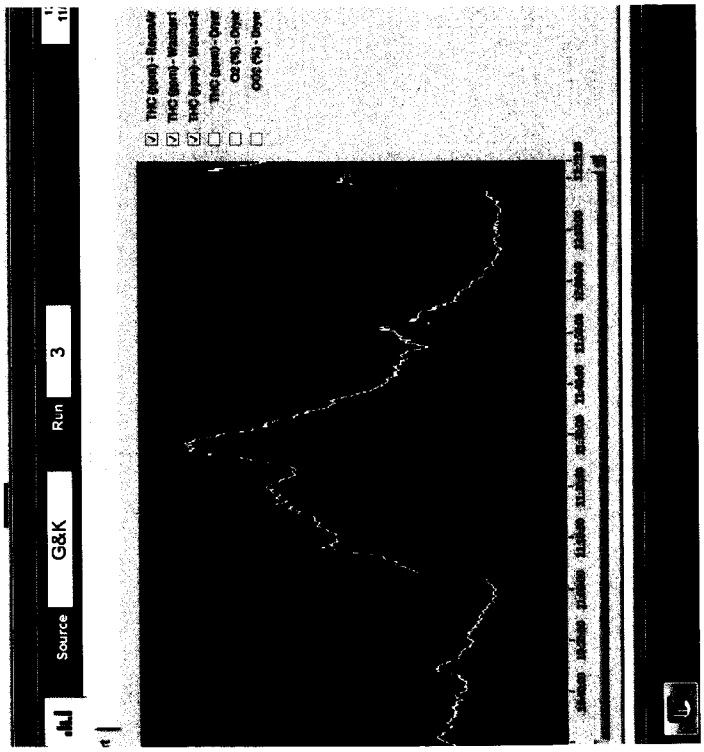
Source
G&K
Run
3
THC (ppm) - Room/A
THC (ppm) - Washer1
THC (ppm) - Washer2
THC (ppm) - Dryer
CO (%) - Dryer
CO2 (%) - Dryer

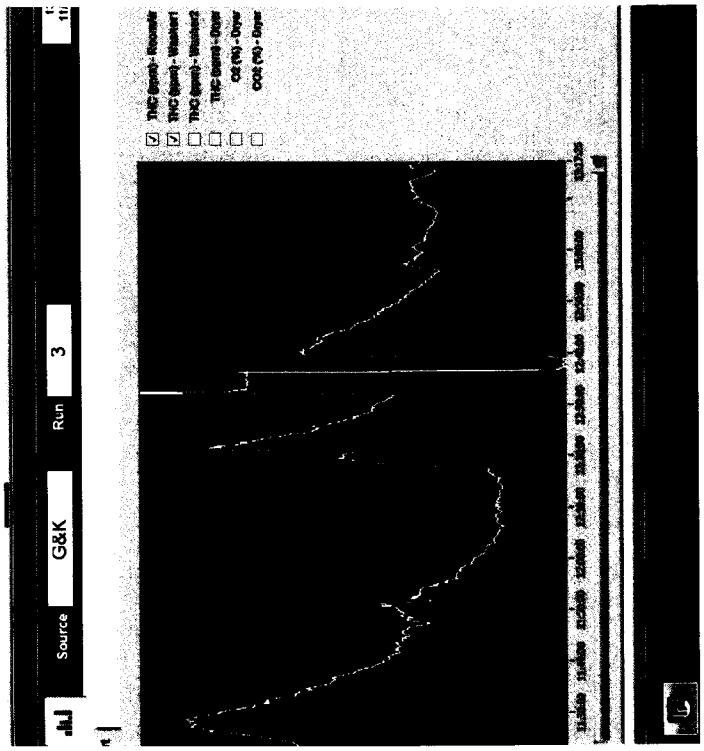

Room Air cal 12:32-12:39

Washer spike up to 8000

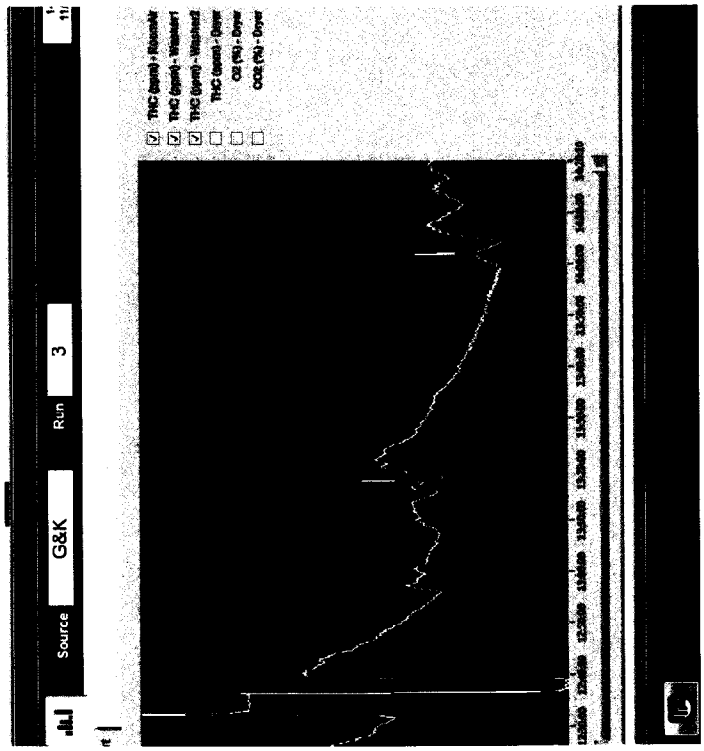

Washer 2 cal done at 13:55

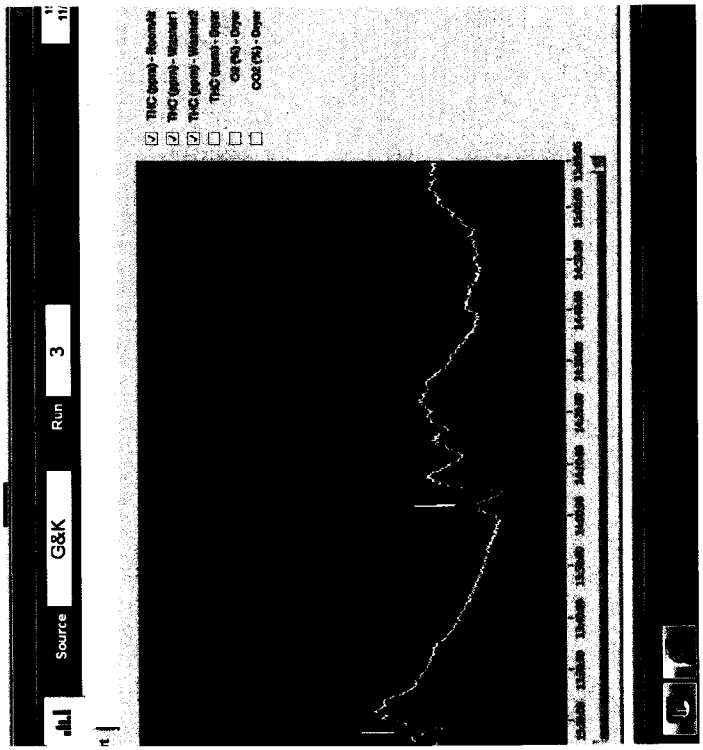
Source
G&K
Run
3

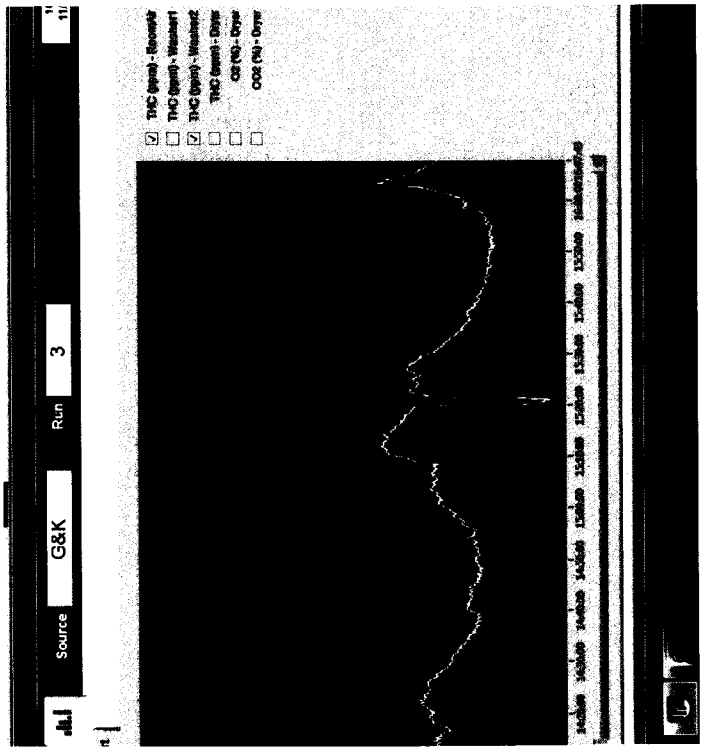
Source
G&K
Run
3
THC (ppm) - Reverse
THC (ppm) - Washer 1
THC (ppm) - Washer 2
THC (ppm) - Dryer
CO (%) - Dryer
CO2 (%) - Dryer

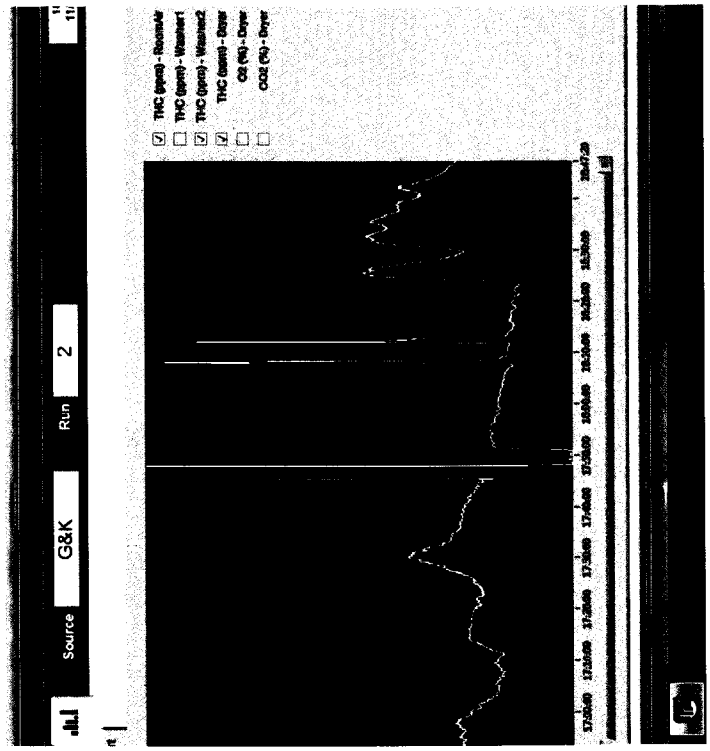

Cal for Room Air at 17:45

Print Towels

CEM CALIBRATION DATA
EPA Method 25A

Firm:	G&K	Analyzer:	California Analytical
Location:	Manchester, NH	Span Value (S):	892
Operator	W Deveau	Analyzer Range:	3000
Sample Location:	Room Air Vent		
Date:	29-Nov-12		

TOTAL HYDROCARBONS

PRE-TEST Calibration Error Check:

	Cylinder ID	Cylinder Gas Conc. (Ca)	Analyzer Response (C)	Slope (m)	Predicted Response (pr)	Calibration Error (<5%) (ce)
Zero, C_O		0.0	0.09			
C_{low} (25-35% span)	CC112496	250.9	250.9	1.0006	251.0	-0.1%
C_{mid} (45-55% span)	XC025800B	450.2	450.2	1.0006	450.5	-0.1%
C_{high} (80-90% span)	CC100940	892.0	892.6	1.0006	892.5	0.0%

Calibration Drift Check:

Run No:		1	2	3	4	AVG
Time						
Initial Zero	C_{OI}	0.1	-0.5			
Initial Span	C_{MI}	450.2	449.5			
Final Zero	C_{OF}	-0.5	-0.3			
Final Span	C_{MF}	449.5	450.8			
Calibration Drift (< 3%)	CD_O	0.1%	0.0%	0.0%	0.0%	
Calibration Drift (< 3%)	CD_M	0.1%	-0.1%			
THC Conc. (ppm, wet)	C_{THCavg}					

Nomenclature

C_{high}	Span gas analyzer response
C_O	Zero gas analyzer response
C_a	Cylinder gas value
C_{OI}	Initial calibration zero response
C_{OF}	Final calibration zero response
C_{MI}	Initial calibration upscale response
C_{MF}	Final calibration upscale response
CDo	Zero calibration drift
CDm	Upscale calibration drift
m	Slope
pr	Predicted response
ce	Calibration error
C	Analyzer response
S	Span
C_{NMHC}	Non-methane hydrocarbon concentration
C_{THC}	Total hydrocarbon concentration
C_{CH4}	Methane concentration

Calculations

$$m = (C_{high} - C_O) / C_a$$

$$pr = m \times C_a$$

$$ce = (C - pr) / C_a \times 100$$

$$CD_O = (C_{OI} - C_{OF}) / S$$

$$C_{NMHC} = C_{THC} - C_{CH4}$$

$$ER = C_{avg} \quad MW \quad 2.5962e\text{-}9 \quad Q \quad 60$$

where,

MW = molecular weight of methane, 16.04
2.5962e-9 = conversion from ppm to pounds per standard cubic feet.
60 = conversion from minutes to hour
Q = flow in units of standard cubic feet per minute

h:\stack\connecticut\projects\2012\g&k - manchester, nh\compliance testing\field data\nov 29 - print towels\[g&k - room air emissions - print towels - 11-29-2012.xls]summary 12/13/112 13:04

Cylinder Gas	THC (ppm)
	RoomAir
Zero ID	
Zero Expiration	
Low ID	CC112496
Low Expiration	41530
Low Concentration	250.9
Mid ID	XC025800B
Mid Expiration	8/8/2015
Mid Concentration	450.2
High ID	CC100940
High Expiration	3/31/2013
High Concentration	892

Calibration Error	THC (ppm)
	RoomAir
Zero Response	0.09
Zero Error (%)	0.01
Low Response	250.88
Low Error (%)	-0.01
Mid Response	450.22
Mid Error (%)	0
High Response	892.61
High Error (%)	0.07

Initial Bias	THC (ppm)
	RoomAir
Zero Response	0
Zero Bias (%)	0
Span Concentration	450.2
Span Response	0
Span Bias (%)	0

Print Towels

Log Averages	THC (ppm) RoomAir
BASELINE	
29Nov2012 - 07:16:00	21.6
29Nov2012 - 07:17:00	23.62
29Nov2012 - 07:18:00	21.86
29Nov2012 - 07:19:00	22.27
29Nov2012 - 07:20:00	21.33
29Nov2012 - 07:21:00	20.51
29Nov2012 - 07:22:00	24.1
29Nov2012 - 07:23:00	24.29
29Nov2012 - 07:24:00	22.81
29Nov2012 - 07:25:00	20.57
29Nov2012 - 07:26:00	20.19
29Nov2012 - 07:27:00	20.85
29Nov2012 - 07:28:00	22.18
29Nov2012 - 07:29:00	21.88
END BASELINE / STARTED TOWEL SORTING	
29Nov2012 - 07:30:00	22.18
29Nov2012 - 07:31:00	20.86
29Nov2012 - 07:32:00	22.13
29Nov2012 - 07:33:00	18.02
29Nov2012 - 07:34:00	20.09
29Nov2012 - 07:35:00	25.15
29Nov2012 - 07:36:00	28
29Nov2012 - 07:37:00	32.95
29Nov2012 - 07:38:00	36.34
29Nov2012 - 07:39:00	38.51
29Nov2012 - 07:40:00	40.71
29Nov2012 - 07:41:00	41.66
29Nov2012 - 07:42:00	41.83
29Nov2012 - 07:43:00	42.53
29Nov2012 - 07:44:00	44.85
29Nov2012 - 07:45:00	44.16
29Nov2012 - 07:46:00	43.22
29Nov2012 - 07:47:00	40.89
29Nov2012 - 07:48:00	45.16
29Nov2012 - 07:49:00	46.53
29Nov2012 - 07:50:00	50.49
29Nov2012 - 07:51:00	51.68
29Nov2012 - 07:52:00	58.03
29Nov2012 - 07:53:00	61.99
29Nov2012 - 07:54:00	64.27
29Nov2012 - 07:55:00	68.01
29Nov2012 - 07:56:00	77.52
29Nov2012 - 07:57:00	88.19
29Nov2012 - 07:58:00	77.47
29Nov2012 - 07:59:00	67.46
29Nov2012 - 08:00:00	65.75
29Nov2012 - 08:01:00	71.29
29Nov2012 - 08:02:00	69.41
29Nov2012 - 08:03:00	73.19
29Nov2012 - 08:04:00	76.9
29Nov2012 - 08:05:00	72.67
29Nov2012 - 08:06:00	70.31
29Nov2012 - 08:07:00	63.08
29Nov2012 - 08:08:00	59.78

Washroom Exhaust Summaries

Time	Ave THC Conc	MW	(SCFM)	lb/hr
0730 - 1230	145.9	12	11490	3.13
1245 - 1733	141.9	12	11326	3.00
		12	11260	0.00
		12	11420	0.00
Daily Average	144.0	12	11374	3.05

Conducted four velocitty measurements over two sampling periods

29Nov2012 - 08:09:00	59.45
29Nov2012 - 08:10:00	63.33
29Nov2012 - 08:11:00	60.6
29Nov2012 - 08:12:00	60.26
29Nov2012 - 08:13:00	59.14
29Nov2012 - 08:14:00	60.19
29Nov2012 - 08:15:00	61.21
29Nov2012 - 08:16:00	59.5
29Nov2012 - 08:17:00	61.33
29Nov2012 - 08:18:00	62.11
29Nov2012 - 08:19:00	67.45
29Nov2012 - 08:20:00	73.16
29Nov2012 - 08:21:00	81.92
29Nov2012 - 08:22:00	91.47
29Nov2012 - 08:23:00	92.06
29Nov2012 - 08:24:00	87.35
29Nov2012 - 08:25:00	85.3
29Nov2012 - 08:26:00	83.77
29Nov2012 - 08:27:00	83.08
29Nov2012 - 08:28:00	79.41
29Nov2012 - 08:29:00	75.97
29Nov2012 - 08:30:00	80.2
29Nov2012 - 08:31:00	78.03
29Nov2012 - 08:32:00	74.96
29Nov2012 - 08:33:00	73.47
29Nov2012 - 08:34:00	74.15
29Nov2012 - 08:35:00	75.65
29Nov2012 - 08:36:00	72.71
29Nov2012 - 08:37:00	73.18
29Nov2012 - 08:38:00	72.24
29Nov2012 - 08:39:00	71.51
29Nov2012 - 08:40:00	69.01
29Nov2012 - 08:41:00	69.45
29Nov2012 - 08:42:00	63.3
29Nov2012 - 08:43:00	65.66
29Nov2012 - 08:44:00	64.45
29Nov2012 - 08:45:00	61.92
29Nov2012 - 08:46:00	61.51
29Nov2012 - 08:47:00	62.19
29Nov2012 - 08:48:00	62.33
29Nov2012 - 08:49:00	59.96
29Nov2012 - 08:50:00	60.59
29Nov2012 - 08:51:00	59.67
29Nov2012 - 08:52:00	60.49
29Nov2012 - 08:53:00	60.53
29Nov2012 - 08:54:00	60.53
29Nov2012 - 08:55:00	60.01
29Nov2012 - 08:56:00	59.36
29Nov2012 - 08:57:00	58.73
29Nov2012 - 08:58:00	58.95
29Nov2012 - 08:59:00	58.26
29Nov2012 - 09:00:00	59.29
29Nov2012 - 09:01:00	57.47
29Nov2012 - 09:02:00	58.53
29Nov2012 - 09:03:00	59.51
29Nov2012 - 09:04:00	53.28
29Nov2012 - 09:05:00	57.53
29Nov2012 - 09:06:00	56.39
29Nov2012 - 09:07:00	59.19
29Nov2012 - 09:08:00	60.59
29Nov2012 - 09:09:00	61.05

29Nov2012 - 09:10:00	60.02
29Nov2012 - 09:11:00	61.03
29Nov2012 - 09:12:00	58.87
29Nov2012 - 09:13:00	59.44
29Nov2012 - 09:14:00	60.47
29Nov2012 - 09:15:00	60.61
29Nov2012 - 09:16:00	62.69
29Nov2012 - 09:17:00	61.98
29Nov2012 - 09:18:00	63.29
29Nov2012 - 09:19:00	64.83
29Nov2012 - 09:20:00	75.97
29Nov2012 - 09:21:00	82.58
29Nov2012 - 09:22:00	85.6
29Nov2012 - 09:23:00	90.33
29Nov2012 - 09:24:00	86.24
29Nov2012 - 09:25:00	72.63
29Nov2012 - 09:26:00	69.2
29Nov2012 - 09:27:00	67.04
29Nov2012 - 09:28:00	71.79
29Nov2012 - 09:29:00	79.46
29Nov2012 - 09:30:00	81.15
29Nov2012 - 09:31:00	80.68
29Nov2012 - 09:32:00	79.21
29Nov2012 - 09:33:00	79.04
29Nov2012 - 09:34:00	76.62
29Nov2012 - 09:35:00	76.75
29Nov2012 - 09:36:00	76.19
29Nov2012 - 09:37:00	75.86
29Nov2012 - 09:38:00	73.59
29Nov2012 - 09:39:00	76.53
29Nov2012 - 09:40:00	80.01
29Nov2012 - 09:41:00	85.54
29Nov2012 - 09:42:00	95.77
29Nov2012 - 09:43:00	97.88
29Nov2012 - 09:44:00	97.2
29Nov2012 - 09:45:00	94.84
29Nov2012 - 09:46:00	97.28
29Nov2012 - 09:47:00	106.91
29Nov2012 - 09:48:00	113.75
29Nov2012 - 09:49:00	124.65
29Nov2012 - 09:50:00	136.5
29Nov2012 - 09:51:00	158.54
29Nov2012 - 09:52:00	190.71
29Nov2012 - 09:53:00	273.69
29Nov2012 - 09:54:00	328.03
29Nov2012 - 09:55:00	304.74
29Nov2012 - 09:56:00	234.57
29Nov2012 - 09:57:00	201.34
29Nov2012 - 09:58:00	172.26
29Nov2012 - 09:59:00	153.77
29Nov2012 - 10:00:00	140.64
29Nov2012 - 10:01:00	128.01
29Nov2012 - 10:02:00	122.57
29Nov2012 - 10:03:00	114.07
29Nov2012 - 10:04:00	105.48
29Nov2012 - 10:05:00	107.32
29Nov2012 - 10:06:00	102.97
29Nov2012 - 10:07:00	96.71
29Nov2012 - 10:08:00	97.87
29Nov2012 - 10:09:00	97.38
29Nov2012 - 10:10:00	93.57

29Nov2012 - 10:11:00	90.96
29Nov2012 - 10:12:00	88.36
29Nov2012 - 10:13:00	86.93
29Nov2012 - 10:14:00	88.23
29Nov2012 - 10:15:00	96.47
29Nov2012 - 10:16:00	118.05
29Nov2012 - 10:17:00	138.14
29Nov2012 - 10:18:00	164.15
29Nov2012 - 10:19:00	169.65
29Nov2012 - 10:20:00	155.94
29Nov2012 - 10:21:00	142.86
29Nov2012 - 10:22:00	134.43
29Nov2012 - 10:23:00	152.95
29Nov2012 - 10:24:00	166.56
29Nov2012 - 10:25:00	163.06
29Nov2012 - 10:26:00	150.83
29Nov2012 - 10:27:00	159.47
29Nov2012 - 10:28:00	173.3
29Nov2012 - 10:29:00	170.83
29Nov2012 - 10:30:00	161.66
29Nov2012 - 10:31:00	176.27
29Nov2012 - 10:32:00	180.89
29Nov2012 - 10:33:00	169.38
29Nov2012 - 10:34:00	164.67
29Nov2012 - 10:35:00	165.58
29Nov2012 - 10:36:00	159.32
29Nov2012 - 10:37:00	158.61
29Nov2012 - 10:38:00	158.17
29Nov2012 - 10:39:00	152.76
29Nov2012 - 10:40:00	155.8
29Nov2012 - 10:41:00	144.24
29Nov2012 - 10:42:00	143.39
29Nov2012 - 10:43:00	148.55
29Nov2012 - 10:44:00	158.81
29Nov2012 - 10:45:00	182.5
29Nov2012 - 10:46:00	175.55
29Nov2012 - 10:47:00	157.38
29Nov2012 - 10:48:00	151.27
29Nov2012 - 10:49:00	143.1
29Nov2012 - 10:50:00	134.15
29Nov2012 - 10:51:00	136.86
29Nov2012 - 10:52:00	137.39
29Nov2012 - 10:53:00	131.31
29Nov2012 - 10:54:00	126.74
29Nov2012 - 10:55:00	122.94
29Nov2012 - 10:56:00	119.47
29Nov2012 - 10:57:00	112.8
29Nov2012 - 10:58:00	105.36
29Nov2012 - 10:59:00	102.46
29Nov2012 - 11:00:00	102.49
29Nov2012 - 11:01:00	103.71
29Nov2012 - 11:02:00	110.58
29Nov2012 - 11:03:00	131.06
29Nov2012 - 11:04:00	207.42
29Nov2012 - 11:05:00	230.91
29Nov2012 - 11:06:00	241.91
29Nov2012 - 11:07:00	261.07
29Nov2012 - 11:08:00	305.3
29Nov2012 - 11:09:00	336.22
29Nov2012 - 11:10:00	325.5
29Nov2012 - 11:11:00	325.27

29Nov2012 - 11:12:00	333.42
29Nov2012 - 11:13:00	346.47
29Nov2012 - 11:14:00	351.7
29Nov2012 - 11:15:00	365.63
29Nov2012 - 11:16:00	383.7
29Nov2012 - 11:17:00	396.42
29Nov2012 - 11:18:00	399.43
29Nov2012 - 11:19:00	405.92
29Nov2012 - 11:20:00	415.57
29Nov2012 - 11:21:00	416.74
29Nov2012 - 11:22:00	399.73
29Nov2012 - 11:23:00	384.44
29Nov2012 - 11:24:00	383.86
29Nov2012 - 11:25:00	402.19
29Nov2012 - 11:26:00	442.34
29Nov2012 - 11:27:00	498.05
29Nov2012 - 11:28:00	527.45
29Nov2012 - 11:29:00	532
29Nov2012 - 11:30:00	514.55
29Nov2012 - 11:31:00	480.66
29Nov2012 - 11:32:00	437.75
29Nov2012 - 11:33:00	420.02
29Nov2012 - 11:34:00	392.19
29Nov2012 - 11:35:00	369.06
29Nov2012 - 11:36:00	343.74
29Nov2012 - 11:37:00	328.47
29Nov2012 - 11:38:00	314.86
29Nov2012 - 11:39:00	288.7
29Nov2012 - 11:40:00	265.61
29Nov2012 - 11:41:00	253.98
29Nov2012 - 11:42:00	244.03
29Nov2012 - 11:43:00	238.66
29Nov2012 - 11:44:00	237.5
29Nov2012 - 11:45:00	230.22
29Nov2012 - 11:46:00	228.51
29Nov2012 - 11:47:00	221.38
29Nov2012 - 11:48:00	201.59
29Nov2012 - 11:49:00	224.48
29Nov2012 - 11:50:00	232.61
29Nov2012 - 11:51:00	245.61
29Nov2012 - 11:52:00	226.15
29Nov2012 - 11:53:00	210.73
29Nov2012 - 11:54:00	206.9
29Nov2012 - 11:55:00	193.45
29Nov2012 - 11:56:00	172.5
29Nov2012 - 11:57:00	155.52
29Nov2012 - 11:58:00	152.07
29Nov2012 - 11:59:00	143.58
29Nov2012 - 12:00:00	132.73
29Nov2012 - 12:01:00	124.17
29Nov2012 - 12:02:00	114.54
29Nov2012 - 12:03:00	110.85
29Nov2012 - 12:04:00	102
29Nov2012 - 12:05:00	98.5
29Nov2012 - 12:06:00	95.12
29Nov2012 - 12:07:00	91.91
29Nov2012 - 12:08:00	97.76
29Nov2012 - 12:09:00	97.69
29Nov2012 - 12:10:00	95.4
29Nov2012 - 12:11:00	97.45
29Nov2012 - 12:12:00	96.36

29Nov2012 - 12:13:00	94.09	
29Nov2012 - 12:14:00	92	
29Nov2012 - 12:15:00	93.75	
29Nov2012 - 12:16:00	95.88	
29Nov2012 - 12:17:00	105.84	
29Nov2012 - 12:18:00	113.72	
29Nov2012 - 12:19:00	236.83	
29Nov2012 - 12:20:00	308.08	
29Nov2012 - 12:21:00	309.46	
29Nov2012 - 12:22:00	453	
29Nov2012 - 12:23:00	462.89	
29Nov2012 - 12:24:00	422.58	
29Nov2012 - 12:25:00	373.87	
29Nov2012 - 12:26:00	353.88	
29Nov2012 - 12:27:00	330.73	
29Nov2012 - 12:28:00	300.03	
29Nov2012 - 12:29:00	279.61	
29Nov2012 - 12:30:00	272.23	
END ROOM AIR 1		
AVERAGES	**145.9**	
29Nov2012 - 12:31:00	261.56	
29Nov2012 - 12:32:00	246.68	
29Nov2012 - 12:33:00	525.38	
29Nov2012 - 12:34:00	449.41	
29Nov2012 - 12:35:00	448.96	
29Nov2012 - 12:36:00	449.48	SPAN
29Nov2012 - 12:37:00	273.7	
29Nov2012 - 12:38:00	2.37	
29Nov2012 - 12:39:00	-0.52	ZERO
29Nov2012 - 12:40:00	255.3	
29Nov2012 - 12:41:00	369.93	
29Nov2012 - 12:42:00	356	
29Nov2012 - 12:43:00	346.18	
29Nov2012 - 12:44:00	341.21	
START ROOM AIR 2		
29Nov2012 - 12:45:00	318.02	
29Nov2012 - 12:46:00	297.39	
29Nov2012 - 12:47:00	279.64	
29Nov2012 - 12:48:00	267.25	
29Nov2012 - 12:49:00	259.06	
29Nov2012 - 12:50:00	242.94	
29Nov2012 - 12:51:00	231.07	
29Nov2012 - 12:52:00	222.96	
29Nov2012 - 12:53:00	212.32	
29Nov2012 - 12:54:00	200.61	
29Nov2012 - 12:55:00	192.56	
29Nov2012 - 12:56:00	184.35	
29Nov2012 - 12:57:00	193.91	
29Nov2012 - 12:58:00	221.81	
29Nov2012 - 12:59:00	211.44	
29Nov2012 - 13:00:00	204.44	
29Nov2012 - 13:01:00	212.02	
29Nov2012 - 13:02:00	204.21	
29Nov2012 - 13:03:00	198.18	
29Nov2012 - 13:04:00	194.54	
29Nov2012 - 13:05:00	190.95	
29Nov2012 - 13:06:00	184.33	

29Nov2012 - 13:07:00	182.98
29Nov2012 - 13:08:00	180.74
29Nov2012 - 13:09:00	187.89
29Nov2012 - 13:10:00	203.48
29Nov2012 - 13:11:00	209.88
29Nov2012 - 13:12:00	212.44
29Nov2012 - 13:13:00	215.15
29Nov2012 - 13:14:00	216.27
29Nov2012 - 13:15:00	199.69
29Nov2012 - 13:16:00	188.59
29Nov2012 - 13:17:00	216.37
29Nov2012 - 13:18:00	224.29
29Nov2012 - 13:19:00	186.11
29Nov2012 - 13:20:00	225.44
29Nov2012 - 13:21:00	254.84
29Nov2012 - 13:22:00	260.1
29Nov2012 - 13:23:00	263.19
29Nov2012 - 13:24:00	257.01
29Nov2012 - 13:25:00	251.4
29Nov2012 - 13:26:00	232.02
29Nov2012 - 13:27:00	217.02
29Nov2012 - 13:28:00	211.87
29Nov2012 - 13:29:00	207.53
29Nov2012 - 13:30:00	202.65
29Nov2012 - 13:31:00	196.94
29Nov2012 - 13:32:00	191.85
29Nov2012 - 13:33:00	190.05
29Nov2012 - 13:34:00	186.39
29Nov2012 - 13:35:00	184.47
29Nov2012 - 13:36:00	178.62
29Nov2012 - 13:37:00	169.13
29Nov2012 - 13:38:00	161.77
29Nov2012 - 13:39:00	157.4
29Nov2012 - 13:40:00	151.26
29Nov2012 - 13:41:00	150.34
29Nov2012 - 13:42:00	145.43
29Nov2012 - 13:43:00	141.76
29Nov2012 - 13:44:00	136.41
29Nov2012 - 13:45:00	134.42
29Nov2012 - 13:46:00	130.23
29Nov2012 - 13:47:00	126.91
29Nov2012 - 13:48:00	124.84
29Nov2012 - 13:49:00	121.12
29Nov2012 - 13:50:00	117.91
29Nov2012 - 13:51:00	114.41
29Nov2012 - 13:52:00	113.2
29Nov2012 - 13:53:00	111.36
29Nov2012 - 13:54:00	109.37
29Nov2012 - 13:55:00	106.49
29Nov2012 - 13:56:00	101.76
29Nov2012 - 13:57:00	99.31
29Nov2012 - 13:58:00	97.65
29Nov2012 - 13:59:00	95.76
29Nov2012 - 14:00:00	96.52
29Nov2012 - 14:01:00	112.76
29Nov2012 - 14:02:00	136.5
29Nov2012 - 14:03:00	132.63
29Nov2012 - 14:04:00	101.97
29Nov2012 - 14:05:00	94.47
29Nov2012 - 14:06:00	141.74
29Nov2012 - 14:07:00	177.86

29Nov2012 - 14:08:00	190.81
29Nov2012 - 14:09:00	183.42
29Nov2012 - 14:10:00	169.78
29Nov2012 - 14:11:00	156.72
29Nov2012 - 14:12:00	147.11
29Nov2012 - 14:13:00	153.03
29Nov2012 - 14:14:00	170.65
29Nov2012 - 14:15:00	182.43
29Nov2012 - 14:16:00	180.34
29Nov2012 - 14:17:00	169.23
29Nov2012 - 14:18:00	173.25
29Nov2012 - 14:19:00	188.02
29Nov2012 - 14:20:00	192.67
29Nov2012 - 14:21:00	189.81
29Nov2012 - 14:22:00	199.96
29Nov2012 - 14:23:00	203.36
29Nov2012 - 14:24:00	199.61
29Nov2012 - 14:25:00	194.02
29Nov2012 - 14:26:00	194.71
29Nov2012 - 14:27:00	192.01
29Nov2012 - 14:28:00	183.46
29Nov2012 - 14:29:00	174.37
29Nov2012 - 14:30:00	165.45
29Nov2012 - 14:31:00	160.72
29Nov2012 - 14:32:00	158.27
29Nov2012 - 14:33:00	151.67
29Nov2012 - 14:34:00	145.43
29Nov2012 - 14:35:00	138.93
29Nov2012 - 14:36:00	134.1
29Nov2012 - 14:37:00	128.42
29Nov2012 - 14:38:00	125.85
29Nov2012 - 14:39:00	123.14
29Nov2012 - 14:40:00	126.58
29Nov2012 - 14:41:00	137.96
29Nov2012 - 14:42:00	137.64
29Nov2012 - 14:43:00	134.35
29Nov2012 - 14:44:00	133.93
29Nov2012 - 14:45:00	134.14
29Nov2012 - 14:46:00	127.62
29Nov2012 - 14:47:00	123.54
29Nov2012 - 14:48:00	121.84
29Nov2012 - 14:49:00	121
29Nov2012 - 14:50:00	125.55
29Nov2012 - 14:51:00	125.98
29Nov2012 - 14:52:00	123.84
29Nov2012 - 14:53:00	126.61
29Nov2012 - 14:54:00	127.59
29Nov2012 - 14:55:00	133.48
29Nov2012 - 14:56:00	128.66
29Nov2012 - 14:57:00	139.08
29Nov2012 - 14:58:00	145.87
29Nov2012 - 14:59:00	155.73
29Nov2012 - 15:00:00	161.76
29Nov2012 - 15:01:00	174.64
29Nov2012 - 15:02:00	177.82
29Nov2012 - 15:03:00	180.04
29Nov2012 - 15:04:00	187.48
29Nov2012 - 15:05:00	186.23
29Nov2012 - 15:06:00	183.3
29Nov2012 - 15:07:00	186.71
29Nov2012 - 15:08:00	183.75

29Nov2012 - 15:09:00	188.01
29Nov2012 - 15:10:00	218.06
29Nov2012 - 15:11:00	244.83
29Nov2012 - 15:12:00	254.29
29Nov2012 - 15:13:00	257.3
29Nov2012 - 15:14:00	252.21
29Nov2012 - 15:15:00	250.71
29Nov2012 - 15:16:00	242.84
29Nov2012 - 15:17:00	233.74
29Nov2012 - 15:18:00	228.08
29Nov2012 - 15:19:00	221.11
29Nov2012 - 15:20:00	214.11
29Nov2012 - 15:21:00	47.45
29Nov2012 - 15:22:00	116.88
29Nov2012 - 15:23:00	212.09
29Nov2012 - 15:24:00	214.72
29Nov2012 - 15:25:00	208.97
29Nov2012 - 15:26:00	209.72
29Nov2012 - 15:27:00	213.09
29Nov2012 - 15:28:00	221.63
29Nov2012 - 15:29:00	213.06
29Nov2012 - 15:30:00	202.9
29Nov2012 - 15:31:00	186.38
29Nov2012 - 15:32:00	176.09
29Nov2012 - 15:33:00	166.69
29Nov2012 - 15:34:00	157.87
29Nov2012 - 15:35:00	149.29
29Nov2012 - 15:36:00	143.5
29Nov2012 - 15:37:00	135.58
29Nov2012 - 15:38:00	136.36
29Nov2012 - 15:39:00	134.7
29Nov2012 - 15:40:00	128.1
29Nov2012 - 15:41:00	122.09
29Nov2012 - 15:42:00	122.87
29Nov2012 - 15:43:00	117.63
29Nov2012 - 15:44:00	113.93
29Nov2012 - 15:45:00	112.39
29Nov2012 - 15:46:00	108.8
29Nov2012 - 15:47:00	108.25
29Nov2012 - 15:48:00	105.6
29Nov2012 - 15:49:00	107.01
29Nov2012 - 15:50:00	106.01
29Nov2012 - 15:51:00	103.95
29Nov2012 - 15:52:00	102.32
29Nov2012 - 15:53:00	102.67
29Nov2012 - 15:54:00	105.36
29Nov2012 - 15:55:00	103.13
29Nov2012 - 15:56:00	107.34
29Nov2012 - 15:57:00	110.79
29Nov2012 - 15:58:00	116.44
29Nov2012 - 15:59:00	136.13
29Nov2012 - 16:00:00	139.42
29Nov2012 - 16:01:00	147.42
29Nov2012 - 16:02:00	169.01
29Nov2012 - 16:03:00	204.25
29Nov2012 - 16:04:00	251.29
29Nov2012 - 16:05:00	239.92
29Nov2012 - 16:06:00	211.7
29Nov2012 - 16:07:00	197.07
29Nov2012 - 16:08:00	182.53
29Nov2012 - 16:09:00	168.1

29Nov2012 - 16:10:00	152.76
29Nov2012 - 16:11:00	135.08
29Nov2012 - 16:12:00	131.2
29Nov2012 - 16:13:00	124.6
29Nov2012 - 16:14:00	120.32
29Nov2012 - 16:15:00	118.05
29Nov2012 - 16:16:00	114.92
29Nov2012 - 16:17:00	112.43
29Nov2012 - 16:18:00	108.71
29Nov2012 - 16:19:00	105.11
29Nov2012 - 16:20:00	103.59
29Nov2012 - 16:21:00	102.54
29Nov2012 - 16:22:00	103
29Nov2012 - 16:23:00	98.64
29Nov2012 - 16:24:00	93.21
29Nov2012 - 16:25:00	90.57
29Nov2012 - 16:26:00	91.94
29Nov2012 - 16:27:00	108.55
29Nov2012 - 16:28:00	115.79
29Nov2012 - 16:29:00	110.08
29Nov2012 - 16:30:00	101.38
29Nov2012 - 16:31:00	100.19
29Nov2012 - 16:32:00	98.22
29Nov2012 - 16:33:00	92.26
29Nov2012 - 16:34:00	88.22
29Nov2012 - 16:35:00	87.51
29Nov2012 - 16:36:00	84.43
29Nov2012 - 16:37:00	85.22
29Nov2012 - 16:38:00	81.64
29Nov2012 - 16:39:00	77.29
29Nov2012 - 16:40:00	75.66
29Nov2012 - 16:41:00	74.06
29Nov2012 - 16:42:00	71.45
29Nov2012 - 16:43:00	72.11
29Nov2012 - 16:44:00	71.13
29Nov2012 - 16:45:00	66.47
29Nov2012 - 16:46:00	63.31
29Nov2012 - 16:47:00	64.03
29Nov2012 - 16:48:00	63.65
29Nov2012 - 16:49:00	62.67
29Nov2012 - 16:50:00	60.16
29Nov2012 - 16:51:00	59.01
29Nov2012 - 16:52:00	58.52
29Nov2012 - 16:53:00	59.46
29Nov2012 - 16:54:00	57.57
29Nov2012 - 16:55:00	55.02
29Nov2012 - 16:56:00	57.26
29Nov2012 - 16:57:00	51.45
29Nov2012 - 16:58:00	56.75
29Nov2012 - 16:59:00	54.24
29Nov2012 - 17:00:00	54.23
29Nov2012 - 17:01:00	51.02
29Nov2012 - 17:02:00	48.94
29Nov2012 - 17:03:00	50.85
29Nov2012 - 17:04:00	54.09
29Nov2012 - 17:05:00	54.22
29Nov2012 - 17:06:00	54.04
29Nov2012 - 17:07:00	51.32
29Nov2012 - 17:08:00	50.52
29Nov2012 - 17:09:00	51.39
29Nov2012 - 17:10:00	49.59

29Nov2012 - 17:11:00	53.16	
29Nov2012 - 17:12:00	53.19	
29Nov2012 - 17:13:00	50.6	
29Nov2012 - 17:14:00	50.33	
29Nov2012 - 17:15:00	49.19	
29Nov2012 - 17:16:00	48.79	
29Nov2012 - 17:17:00	45.72	
29Nov2012 - 17:18:00	45.55	
29Nov2012 - 17:19:00	44.72	
29Nov2012 - 17:20:00	42.71	
29Nov2012 - 17:21:00	43.56	
29Nov2012 - 17:22:00	44.41	
29Nov2012 - 17:23:00	42.66	
29Nov2012 - 17:24:00	37.3	
29Nov2012 - 17:25:00	39.37	
29Nov2012 - 17:26:00	38.17	
29Nov2012 - 17:27:00	41.47	
29Nov2012 - 17:28:00	41.1	
29Nov2012 - 17:29:00	40.65	
29Nov2012 - 17:30:00	38.2	
29Nov2012 - 17:31:00	39.84	
29Nov2012 - 17:32:00	38.08	
29Nov2012 - 17:33:00	31.76	
END ROOM AIR 2		
AVERAGES	**141.9**	
DAILY AVERAGE	**144.0**	
29Nov2012 - 17:34:00	35.73	
29Nov2012 - 17:35:00	31.08	
29Nov2012 - 17:36:00	30.12	
29Nov2012 - 17:37:00	70.2	
29Nov2012 - 17:38:00	435.24	
29Nov2012 - 17:39:00	450.78	SPAN
29Nov2012 - 17:40:00	448.06	
29Nov2012 - 17:41:00	180.24	
29Nov2012 - 17:42:00	-0.3	ZERO
29Nov2012 - 17:43:00	-0.44	
29Nov2012 - 17:43:49	-0.51	

Room Air -Print Towels With Strip
G&K Services
Methods 1-4 Summary

Run No.	RA-1	RA-2	RA-3	RA-4	
Date:	29-Nov-12	29-Nov-12	29-Nov-12	29-Nov-12	
Start Time	7:30	12:45			
Stop Time	12:30	17:33			AVERAGES
Barometric Pressure, (inches of mercury)	29.96	29.96	29.96	29.96	29.96
Net Sampling Time, (minutes)	300.0	288.0			294.0
Wet Bulb Temp., (F)	40	45	48	56	47
Dry Bulb Temp., (F)	48	59	60	58	56
Calculated Saturation Constant	0.00832	0.01011	0.01132	0.01520	0.0112
Moisture, (percent)	0.5	0.5	0.7	1.5	0.8
Dry Mole Fraction	0.9947	0.9952	0.9932	0.9855	0.9921
CO_2 Concentration, (percent dry)	0.0	0.0	0.0	0.0	0.0
O_2 Concentration, (percent dry)	20.9	20.9	20.9	20.9	20.9
CO and N_2, (percent dry)	79.1	79.1	79.1	79.1	79.1
Dry Molecular Weight, (lb/lb mole)	28.84	28.84	28.84	28.84	28.84
Wet Molecular Weight, (lb/lb mole)	28.78	28.78	28.76	28.68	28.75
Excess Air at Stack, (percent)	-118750.0	-118750.0	-118750.0	-118750.0	-118750.0
Stack Area, (square inches)	452.4	452.4	452.4	452.4	452.4
Static Pressure, (inches of water)	-2.20	-2.70	-2.50	-2.40	-2.45
Stack Pressure, (inches of mercury)	29.80	29.76	29.78	29.78	29.78
Average Stack Temperature, (°F)	48	59	60	58	56
Average Sqroot of ΔP	1.0654	1.0624	1.0564	1.0673	1.0629
SDE Average	24.016	24.209	24.091	24.285	24.150
Pitot Coefficient	0.84	0.84	0.84	0.84	0.84
Stack Gas Velocity, (actual feet per minute - afpm)	3,534	3,564	3,547	3,581	3,557
Stack Flowrate, (actual cubic feet per minute - acfm)	11,102	11,198	11,144	11,249	11,173
Stack Flowrate, (standard cubic feet per minute - scfm)	11,490	11,326	11,260	11,420	11,374
Stack Flowrate, (dry standard cubic feet per minute - dscfm)	11,428	11,271	11,183	11,254	11,284

Room Air 1 Print Towels

Method 2 Data Sheet

Plant: G+K
Location: Toomair

Date: 11/29/12
Time:

Stack Diameter		"	Area, A		ft^2
Barometric Pressure, P_b	29.96	"Hg	Meter Temp.		°F
% Moisture		$\%H_2O$	Stack O_2		%
Static Pressure, P_g	-2.2	$"H_2O$	Stack CO_2		%
Pitot Coefficient, C_p	.84		MW (wet)		lb/lb-mole

Port	Point	ΔP	$\sqrt{\Delta P}$	T_S (°F)	+ θ clockwise - θ counter-clockwise	$\sqrt{\Delta P}\cos\theta$	
	1	1.2		47			
	2	1.4		48			
	3	1.4		48			
	4	1.4		48			
	5	1.0		48			
	6	.90		48			
	7	.82		48			
	8	.78		48			
	1	1.2		48			
	2	1.3		48			
	3	1.4		48			
	4	1.3		48			
	5	1.2		49			
	6	1.05		49			
	7	1.0		49			
	8	.97					
		wet bulb 40					
	Average						

Average Absolute Temp.

Absolute Gas Temperature, $T_{ST} = T_S + 460°$

Absolute Gas Pressure, $P_S = P_b + P_g/13.6$ _____ "Hg

Gas Velocity, $V_s = (85.49)\ C_p\ \sqrt{\Delta P}\,avg\ \sqrt{\frac{T_{ST}\,avg}{P_S\ M_W}}$ _____ ft/sec

Actual Gas Flowrate, $Q_a = (V_s)\ (60)\ (A)$ _____ ACFM

Standard Gas Flowrate, $Q_{std} = \left[\frac{528°R}{T_{ST}}\right]\left[\frac{P_S}{29.92}\right]\left[\frac{100 - \%H_2O}{100}\right]Q_a$ _____ DSCFM

Method 2 Data Sheet

Room Air ©
2

Plant	G+K	Date	11/29/12
Location	Room Air	Time	1155

Stack Diameter	24	"	Area, A	ft²
Barometric Pressure, P_b	29.96	"Hg	Meter Temp.	°F
% Moisture		%H_2O	Stack O_2	%
Static Pressure, P_g	-.27	"H_2O	Stack CO_2	%
Pitot Coefficient, C_p	.84		MW (wet)	lb/lb-mole

Port	Point	ΔP	$\sqrt{\Delta P}$	T_S (°F)	+ θ clockwise - θ counter-clockwise	$\sqrt{\Delta P}\cos\theta$	
1	1	1.2		59			
	2	1.5		59			
	3	1.3		59			
	4	1.4		59			
	5	1.05		59			
	6	.95		59			
	7	.99		59			
	8	.90		59			
2	1	1.05		59			
	2	1.20		60			
	3	1.30		60			
	4	1.30		60			
	5	1.10		60			
	6	1.10		59			
	7	.92		59			
	8	.95		59			
			wet bulb		45°		
	Average						

Average Absolute Temp. _____

Absolute Gas Temperature, $T_{ST} = T_S + 460°$

Absolute Gas Pressure, $P_S = P_b + P_g/13.6$ _____ "Hg

Gas Velocity, $V_s = (85.49)\ C_p\ \sqrt{\Delta P}\,avg\ \sqrt{\dfrac{T_{ST}\,avg}{P_S\ M_W}}$ _____ ft/sec

Actual Gas Flowrate, $Q_a = (V_s)\ (60)\ (A)$ _____ ACFM

Standard Gas Flowrate, $Q_{std} = \left[\dfrac{528°R}{T_{ST}}\right]\left[\dfrac{P_S}{29.92}\right]\left[\dfrac{100 - \%H_2O}{100}\right]Q_a$ _____ DSCFM

① measured after making changes to NDO's & moving fan to damper

Method 2 Data Sheet

Print Towels

Room Air 3

Plant: GTR
Location: Room Air

Date: 11/29/12
Time: 1300

Stack Diameter: 24 "
Barometric Pressure, P_b: 29.96 "Hg
% Moisture: %H_2O
Static Pressure, P_g: -0.5 "H_2O
Pitot Coefficient, C_p: .84

Area, A: ft^2
Meter Temp.: °F
Stack O_2: %
Stack CO_2: %
MW (wet): lb/lb-mole

Port	Point	ΔP	$\sqrt{\Delta P}$	T_S (°F)	+ θ clockwise - θ counter-clockwise	$\sqrt{\Delta P}\cos\theta$	
1	1	1.1		59			
	2	1.2		59			
	3	1.3		60			
	4	1.3		60			
	5	1.3		60			
	6	1.05		60			
	7	.98		60			
	8	.96		60			
2	1	1.2		60			
	2	1.2		60			
	3	1.4		61			
	4	1.3		61			
	5	1.0		61			
	6	.96		61			
	7	.86		60			
	8	.85		59			
			wet bulb		48		
	Average						

Average Absolute Temp.

Absolute Gas Temperature, $T_{ST} = T_S + 460°$

Absolute Gas Pressure, $P_S = P_b + P_g/13.6$ "Hg

Gas Velocity, $V_s = (85.49)\ C_p\ \sqrt{\Delta P}\,avg\ \sqrt{\frac{T_{ST}\,avg}{P_S\ M_W}}$ ft/sec

Actual Gas Flowrate, $Q_a = (V_s)\ (60)\ (A)$ ACFM

Standard Gas Flowrate, $Q_{std} = \left[\frac{528°R}{T_{ST}}\right]\left[\frac{P_S}{29.92}\right]\left[\frac{100 - \%H_2O}{100}\right]Q_a$ DSCFM

Method 2 Data Sheet

Room Air 4

Plant G+K
Location Room Air

Date 11/29/12
Time 1634

Stack Diameter 24 "
Barometric Pressure, P_b 29.96 "Hg
% Moisture ____ $\%H_2O$
Static Pressure, P_g -2.4 $"H_2O$
Pitot Coefficient, C_p .84

Area, A ____ ft^2
Meter Temp. ____ °F
Stack O_2 ____ %
Stack CO_2 ____ %
MW (wet) ____ lb/lb-mole

Port	Point	ΔP	$\sqrt{\Delta P}$	T_S (°F)	+ θ clockwise - θ counter-clockwise	$\sqrt{\Delta P}\cos\theta$	
1	1	1.2		54			
	2	1.3		58			
	3	1.4		58			
	4	1.4		58			
	5	1.3		58			
	6	1.0		58			
	7	0.92		58			
	8	0.85		58			
2	1	1.1		58			
	2	1.3		58			
	3	1.2		58			
	4	1.2		58			
	5	1.1		58			
	6	1.05		58			
	7	1.0		58			
	8	1.0		58			
		wet bulb 5e					
	Average						
		Average Absolute Temp.					

Absolute Gas Temperature, $T_{ST} = T_S + 460°$

Absolute Gas Pressure, $P_S = P_b + P_g/13.6$ ____ "Hg

Gas Velocity, $Vs = (85.49)\ Cp\ \sqrt{\Delta P}\ avg\ \sqrt{\dfrac{T_{ST}\ avg}{P_S\ M_W}}$ ____ ft/sec

Actual Gas Flowrate, $Qa = (V_s)\ (60)\ (A)$ ____ ACFM

Standard Gas Flowrate, $Q_{std} = \left[\dfrac{528°R}{T_{ST}}\right]\left[\dfrac{P_S}{29.92}\right]\left[\dfrac{100 - \%H_2O}{100}\right]Qa$ ____ DSCFM

~~Shot~~
Print Towels

EVACUATED CANISTER SAMPLING FORM

Client: GtK	Run Number: T015 - Room Air -3
Location: Room Air Vent	Operator:
Process:	Sample ID:
Canister Number: 00277/6600160	Flow Controller ID: FC500074
Canister Leak Check Date:	Comments:

	Canister Vacuum		Barometric Pressure	Ambient Temperature
	Manometer (mmHg)	Gauge (inHg)	(mmHg)	(°C)
Pre-test		30.01	29.96	31
Post			29.96	47

Pretest Leak Rate	mmHg/10 minutes
	0.00
Post	0.00

Elapsed Time	Clock Time	Gauge Vacuum (inHg)	Flow Meter Setting (ml/min)	Comments
0	0730	30+	8 hr flow controller	
60	0830	30		
120	0930	28		
180	1030	24.5		
240	1130	22.0		
300	1230	18.0		- stopped sampling for 15
360	1330	16		min while room air FID
390	1400	12.5		was calibrated
	→ switching to new canister			

TRC

Print Tanks

EVACUATED CANISTER SAMPLING FORM

Client: G+K	Run Number: T015-Room Air-4
Location: Room Air	Operator: RP
Process:	Sample ID:
Canister Number: 0037163/5001539	Flow Controller ID: ~~SE~~ FC506074
Canister Leak Check Date: 11/29/12	Comments:

	Canister Vacuum		Barometric Pressure	Ambient Temperature
	Manometer (mmHg)	Gauge (inHg)	(mmHg)	(°C)
Pre-test		29.88	29.96	47
		23.25	29.96	44

Pretest Leak Rate	mmHg/10 minutes

Elapsed Time	Clock Time	Gauge Vacuum (inHg)	Flow Meter Setting (ml/min)	Comments
0	1420	30+	8 hr flow controller	
60	1520	30		
120	1620	27		
~~180~~	~~1720~~ 1645	26	—	stopped early due to
~~240~~	~~1820~~			steam generator malfunction

TRC

APPENDIX C

ELLIS WASHER 1 FIELD DATA

Shop Towels
No Strip

CEM CALIBRATION DATA
EPA Method 25A

Firm:	G&K	Analyzer:	California Analytical
Location:	Manchester, NH	Span Value (S):	8936
Operator	W Deveau	Analyzer Range:	30000
Sample Location:	Ellis Washer 1		
Date:	27-Nov-12		

TOTAL HYDROCARBONS

PRE-TEST Calibration Error Check:

	Cylinder ID	Cylinder Gas Conc. (Ca)	Analyzer Response (C)	Slope (m)	Predicted Response (pr)	Calibration Error (<5%) (ce)
Zero, C_O		0.0	-22.18			
C_{low} (25-35% span)	xc0033311b	2922.0	2918.2	1.0026	2929.6	-0.4%
C_{mid} (45-55% span)	cc349917	4940.0	4941.1	1.0026	4952.9	-0.2%
C_{high} (80-90% span)	cc351430	8936.0	8937.2	1.0026	8959.4	-0.2%

Calibration Drift Check:

Run No:		1	2	3	4	AVG
Time						
Initial Zero	C_{OI}	-22.2	-16.8	23.9		
Initial Span	C_{MI}	2918.2	2944.9	2966.8		
Final Zero	C_{OF}	-16.8	23.9	-33.7		
Final Span	C_{MF}	2944.9	2966.8	2924.5		
Calibration Drift (< 3%)	CD_O	-0.1%	-0.5%	0.6%		
Calibration Drift (< 3%)	CD_M	-0.3%	-0.2%	0.5%		
THC Conc. (ppm, wet)	C_{THCavg}					

Nomenclature

C_{high}	Span gas analyzer response
C_O	Zero gas analyzer response
C_a	Cylinder gas value
C_{OI}	Initial calibration zero response
C_{OF}	Final calibration zero response
C_{MI}	Initial calibration upscale response
C_{MF}	Final calibration upscale response
CDo	Zero calibration drift
CDm	Upscale calibration drift
m	Slope
pr	Predicted response
ce	Calibration error
C	Analyzer response
S	Span
C_{NMHC}	Non-methane hydrocarbon concentration
C_{THC}	Total hydrocarbon concentration
C_{CH4}	Methane concentration

Calculations

$$m = (C_{high} - C_O) / C_a$$

$$pr = m \times C_a$$

$$ce = (C - pr) / C_a \times 100$$

$$CD_O = (C_{OI} - C_{OF}) / S$$

$$C_{NMHC} = C_{THC} - C_{CH4}$$

$$ER = C_{avg} \quad MW \quad 2.5962e\text{-}9 \quad Q \quad 60$$

where,

MW = molecular weight of methane, 16.04
2.5962e-9 = conversion from ppm to pounds per standard cubic feet.
60 = conversion from minutes to hour
Q = flow in units of standard cubic feet per minute

h:\stack\connecticut\projects\2012\g&k - manchester, nh\compliance testing\field data\nov 27 - shop towels - no strip\[g&k - washer no. 1 emissions - shop towels no strip - 11-27-2012.xls]calibrations 1

Cylinder Gas	THC (ppm) Washer1
Zero ID	
Zero Expiration	
Low ID	XC03311B
Low Expiration	12/27/14
Low Concentration	2922
Mid ID	CC349917
Mid Expiration	7/7/2014
Mid Concentration	4940
High ID	CC351430
High Expiration	10/21/2014
High Concentration	8936

Calibration Error	THC (ppm) Washer1
Zero Response	-22.18
Zero Error (%)	-0.25
Low Response	2918.21
Low Error (%)	-0.13
Mid Response	4941.13
Mid Error (%)	0.02
High Response	8937.17
High Error (%)	0.01

Initial Bias	THC (ppm) Washer1
Zero Response	0
Zero Bias (%)	0
Span Concentration	2922
Span Response	0
Span Bias (%)	0

Shop Towels
No Strip

Log Averages	THC (ppm) Washer1	
27Nov2012 - 07:31:00	139.56	
27Nov2012 - 07:32:00	135.75	
27Nov2012 - 07:33:00	135.93	
27Nov2012 - 07:34:00	132.24	
27Nov2012 - 07:35:00	112.49	
27Nov2012 - 07:36:00	122.78	
27Nov2012 - 07:37:00	104.4	
27Nov2012 - 07:38:00	89.16	
27Nov2012 - 07:39:00	104.83	
27Nov2012 - 07:40:00	118.96	
27Nov2012 - 07:41:00	119.67	
27Nov2012 - 07:42:00	81.84	
27Nov2012 - 07:43:00	88.29	
27Nov2012 - 07:44:00	74.47	
27Nov2012 - 07:45:00	115.5	
27Nov2012 - 07:46:00	85.22	
27Nov2012 - 07:47:00	114.31	
27Nov2012 - 07:48:00	84.58	
27Nov2012 - 07:49:00	116.53	
27Nov2012 - 07:50:00	109.26	
27Nov2012 - 07:51:00	97.8	
27Nov2012 - 07:52:00	68.78	
27Nov2012 - 07:53:00	90.33	
27Nov2012 - 07:54:00	100.87	
27Nov2012 - 07:55:00	105.81	
27Nov2012 - 07:56:00	91.82	
27Nov2012 - 07:57:00	115.54	
27Nov2012 - 07:58:00	94.42	
27Nov2012 - 07:59:00	97.34	
27Nov2012 - 08:00:00	96.98	
27Nov2012 - 08:01:00	104.89	
27Nov2012 - 08:02:00	89.18	
27Nov2012 - 08:03:00	94.2	
27Nov2012 - 08:04:00	98.19	
27Nov2012 - 08:05:00	110.67	
27Nov2012 - 08:06:00	95.81	
27Nov2012 - 08:07:00	101.35	
27Nov2012 - 08:08:00	103.64	
27Nov2012 - 08:09:00	71.16	
27Nov2012 - 08:10:00	107.98	
27Nov2012 - 08:11:00	92.43	
27Nov2012 - 08:12:00	95.81	
27Nov2012 - 08:13:00	94.8	
27Nov2012 - 08:14:00	2031.83	
27Nov2012 - 08:15:00	2944.88	SPAN
27Nov2012 - 08:16:00	1716.73	
27Nov2012 - 08:17:00	-16.84	ZERO
27Nov2012 - 08:18:00	-1.64	
27Nov2012 - 08:19:00	62.04	
27Nov2012 - 08:20:00	119.53	
27Nov2012 - 08:21:00	117.06	
27Nov2012 - 08:22:00	149.72	
27Nov2012 - 08:23:00	117.06	
27Nov2012 - 08:24:00	165.62	
27Nov2012 - 08:25:00	178.56	
27Nov2012 - 08:26:00	158.33	
27Nov2012 - 08:27:00	141.83	
27Nov2012 - 08:28:00	137.5	

Washer 1 Exhaust Summaries

Time	Ave THC Conc	MW	(SCFM)	lb/hr
1020 - 1150	174.6	12	351	0.11
1328 - 1501	163.1	12	332	0.10
1723 - 1854	189.6	12	344	0.12
Daily Average	174.3	12	342	0.11

27Nov2012 - 08:29:00	133.12
27Nov2012 - 08:30:00	101.03
27Nov2012 - 08:31:00	125.75
27Nov2012 - 08:32:00	119.8
27Nov2012 - 08:33:00	151.94
27Nov2012 - 08:34:00	114.54
27Nov2012 - 08:35:00	105.99
27Nov2012 - 08:36:00	111.78
27Nov2012 - 08:37:00	143.89
27Nov2012 - 08:38:00	138.42
27Nov2012 - 08:39:00	136.13
27Nov2012 - 08:40:00	133.92
27Nov2012 - 08:41:00	141.02
27Nov2012 - 08:42:00	130.23
27Nov2012 - 08:43:00	131.96
27Nov2012 - 08:44:00	128.06
27Nov2012 - 08:45:00	128.38
27Nov2012 - 08:46:00	140.89
27Nov2012 - 08:47:00	134.45
27Nov2012 - 08:48:00	150.41
27Nov2012 - 08:49:00	131.75
27Nov2012 - 08:50:00	122.69
27Nov2012 - 08:51:00	150.19
27Nov2012 - 08:52:00	148.32
27Nov2012 - 08:53:00	144.6
27Nov2012 - 08:54:00	136.99
27Nov2012 - 08:55:00	139.97
27Nov2012 - 08:56:00	134.96
27Nov2012 - 08:57:00	155.95
27Nov2012 - 08:58:00	154.75
27Nov2012 - 08:59:00	158.81
27Nov2012 - 09:00:00	136.92
27Nov2012 - 09:01:00	133.95
27Nov2012 - 09:02:00	135.33
27Nov2012 - 09:03:00	138.19
27Nov2012 - 09:04:00	140.45
27Nov2012 - 09:05:00	152.26
27Nov2012 - 09:06:00	113.8
27Nov2012 - 09:07:00	143.13
27Nov2012 - 09:08:00	133.44
27Nov2012 - 09:09:00	131.54
27Nov2012 - 09:10:00	147.86
27Nov2012 - 09:11:00	146.38
27Nov2012 - 09:12:00	150.28
27Nov2012 - 09:13:00	127.39
27Nov2012 - 09:14:00	128.75
27Nov2012 - 09:15:00	143.82
27Nov2012 - 09:16:00	130.07
27Nov2012 - 09:17:00	133.37
27Nov2012 - 09:18:00	115.93
27Nov2012 - 09:19:00	129.47
27Nov2012 - 09:20:00	126.33
27Nov2012 - 09:21:00	141.63
27Nov2012 - 09:22:00	140.4
27Nov2012 - 09:23:00	124.37
27Nov2012 - 09:24:00	132.08
27Nov2012 - 09:25:00	129.58
27Nov2012 - 09:26:00	137.98
27Nov2012 - 09:27:00	134.8
27Nov2012 - 09:28:00	126.28
27Nov2012 - 09:29:00	137.31

27Nov2012 - 09:30:00	118.21
27Nov2012 - 09:31:00	97.52
27Nov2012 - 09:32:00	124.16
27Nov2012 - 09:33:00	135.35
27Nov2012 - 09:34:00	127.65
27Nov2012 - 09:35:00	129.65
27Nov2012 - 09:36:00	130.16
27Nov2012 - 09:37:00	146.2
27Nov2012 - 09:38:00	142.25
27Nov2012 - 09:39:00	132.98
27Nov2012 - 09:40:00	133.18
27Nov2012 - 09:41:00	136.66
27Nov2012 - 09:42:00	130.35
27Nov2012 - 09:43:00	105.61
27Nov2012 - 09:44:00	135.75
27Nov2012 - 09:45:00	128.31
27Nov2012 - 09:46:00	149.58
27Nov2012 - 09:47:00	105.94
27Nov2012 - 09:48:00	97.54
27Nov2012 - 09:49:00	61.04
27Nov2012 - 09:50:00	53.46
27Nov2012 - 09:51:00	41.94
27Nov2012 - 09:52:00	48.79
27Nov2012 - 09:53:00	34.91
27Nov2012 - 09:54:00	69.12
27Nov2012 - 09:55:00	26.25
27Nov2012 - 09:56:00	64.23
27Nov2012 - 09:57:00	32.12
27Nov2012 - 09:58:00	44.94
27Nov2012 - 09:59:00	56.15
27Nov2012 - 10:00:00	66.51
27Nov2012 - 10:01:00	62.91
27Nov2012 - 10:02:00	43.03
27Nov2012 - 10:03:00	38.39
27Nov2012 - 10:04:00	37.98
27Nov2012 - 10:05:00	55.05
27Nov2012 - 10:06:00	48.03
27Nov2012 - 10:07:00	59.92
27Nov2012 - 10:08:00	38.83
27Nov2012 - 10:09:00	37.49
27Nov2012 - 10:10:00	30.08
27Nov2012 - 10:11:00	31.33
27Nov2012 - 10:12:00	15.02
27Nov2012 - 10:13:00	50.75
27Nov2012 - 10:14:00	14.81
27Nov2012 - 10:15:00	13.17
27Nov2012 - 10:16:00	31.59
27Nov2012 - 10:17:00	50.99
27Nov2012 - 10:18:00	44.44
27Nov2012 - 10:19:00	38.78

START WASH LOAD 2 (WASHER #1)

27Nov2012 - 10:20:00	66.24
27Nov2012 - 10:21:00	52.35
27Nov2012 - 10:22:00	470.53
27Nov2012 - 10:23:00	523.45
27Nov2012 - 10:24:00	498.51
27Nov2012 - 10:25:00	235.15
27Nov2012 - 10:26:00	288.4
27Nov2012 - 10:27:00	222.74

27Nov2012 - 10:28:00	252.22
27Nov2012 - 10:29:00	202.55
27Nov2012 - 10:30:00	255.73
27Nov2012 - 10:31:00	278.98
27Nov2012 - 10:32:00	317.35
27Nov2012 - 10:33:00	355.73
27Nov2012 - 10:34:00	408.95
27Nov2012 - 10:35:00	465.15
27Nov2012 - 10:36:00	387.91
27Nov2012 - 10:37:00	106.4
27Nov2012 - 10:38:00	275.27
27Nov2012 - 10:39:00	283.87
27Nov2012 - 10:40:00	99.06
27Nov2012 - 10:41:00	346.02
27Nov2012 - 10:42:00	145.07
27Nov2012 - 10:43:00	72.58
27Nov2012 - 10:44:00	129.77
27Nov2012 - 10:45:00	163.1
27Nov2012 - 10:46:00	47.82
27Nov2012 - 10:47:00	142.64
27Nov2012 - 10:48:00	25.29
27Nov2012 - 10:49:00	58.41
27Nov2012 - 10:50:00	151.57
27Nov2012 - 10:51:00	6.26
27Nov2012 - 10:52:00	-1.29
27Nov2012 - 10:53:00	104.41
27Nov2012 - 10:54:00	335.57
27Nov2012 - 10:55:00	489.65
27Nov2012 - 10:56:00	144.58
27Nov2012 - 10:57:00	195.75
27Nov2012 - 10:58:00	239.85
27Nov2012 - 10:59:00	30.02
27Nov2012 - 11:00:00	109.81
27Nov2012 - 11:01:00	1.41
27Nov2012 - 11:02:00	213
27Nov2012 - 11:03:00	173.18
27Nov2012 - 11:04:00	72.85
27Nov2012 - 11:05:00	-5.02
27Nov2012 - 11:06:00	159.09
27Nov2012 - 11:07:00	360.42
27Nov2012 - 11:08:00	181.33
27Nov2012 - 11:09:00	28.26
27Nov2012 - 11:10:00	3.13
27Nov2012 - 11:11:00	132.66
27Nov2012 - 11:12:00	98.01
27Nov2012 - 11:13:00	62.32
27Nov2012 - 11:14:00	8.33
27Nov2012 - 11:15:00	9.04
27Nov2012 - 11:16:00	27.03
27Nov2012 - 11:17:00	120.87
27Nov2012 - 11:18:00	1127.63
27Nov2012 - 11:19:00	374.09
27Nov2012 - 11:20:00	176.47
27Nov2012 - 11:21:00	241.28
27Nov2012 - 11:22:00	262.55
27Nov2012 - 11:23:00	198.8
27Nov2012 - 11:24:00	123.48
27Nov2012 - 11:25:00	94.23
27Nov2012 - 11:26:00	157.46
27Nov2012 - 11:27:00	181.87
27Nov2012 - 11:28:00	129.32

27Nov2012 - 11:29:00	44.19	
27Nov2012 - 11:30:00	120.12	
27Nov2012 - 11:31:00	160.88	
27Nov2012 - 11:32:00	115.18	
27Nov2012 - 11:33:00	49.22	
27Nov2012 - 11:34:00	572.92	
27Nov2012 - 11:35:00	235.81	
27Nov2012 - 11:36:00	77.27	
27Nov2012 - 11:37:00	21.07	
27Nov2012 - 11:38:00	44.84	
27Nov2012 - 11:39:00	64.79	
27Nov2012 - 11:40:00	30.99	
27Nov2012 - 11:41:00	16.53	
27Nov2012 - 11:42:00	25.2	
27Nov2012 - 11:43:00	12.75	
27Nov2012 - 11:44:00	-0.36	
27Nov2012 - 11:45:00	28.6	
27Nov2012 - 11:46:00	-1.76	
27Nov2012 - 11:47:00	31.09	
27Nov2012 - 11:48:00	77.62	
27Nov2012 - 11:49:00	32.2	
27Nov2012 - 11:50:00	30	
END WASH LOAD 2 (WASHER #1)		
AVERAGES	**174.6**	
27Nov2012 - 11:51:00	36.26	
27Nov2012 - 11:52:00	45.25	
27Nov2012 - 11:53:00	43.01	
27Nov2012 - 11:54:00	39.92	
27Nov2012 - 11:55:00	58.31	
27Nov2012 - 11:56:00	59.83	
27Nov2012 - 11:57:00	55.89	
27Nov2012 - 11:58:00	27.72	
27Nov2012 - 11:59:00	48.69	
27Nov2012 - 12:00:00	74.81	
27Nov2012 - 12:01:00	60.07	
27Nov2012 - 12:02:00	103.92	
27Nov2012 - 12:03:00	104.19	
27Nov2012 - 12:04:00	117.14	
27Nov2012 - 12:05:00	120.2	
27Nov2012 - 12:06:00	88.67	
27Nov2012 - 12:07:00	91.76	
27Nov2012 - 12:08:00	1466.87	
27Nov2012 - 12:09:00	2912.98	
27Nov2012 - 12:10:00	2966.8	SPAN
27Nov2012 - 12:11:00	1970.65	
27Nov2012 - 12:12:00	23.85	ZERO
27Nov2012 - 12:13:00	31.62	
27Nov2012 - 12:14:00	32.01	
27Nov2012 - 12:15:00	89.27	
27Nov2012 - 12:16:00	100.57	
27Nov2012 - 12:17:00	100.23	
27Nov2012 - 12:18:00	89.06	
27Nov2012 - 12:19:00	95.29	
27Nov2012 - 12:20:00	94.34	
27Nov2012 - 12:21:00	98.52	
27Nov2012 - 12:22:00	97.2	
27Nov2012 - 12:23:00	58.61	
27Nov2012 - 12:24:00	64.58	
27Nov2012 - 12:25:00	57.04	

27Nov2012 - 12:26:00	41.84
27Nov2012 - 12:27:00	60.64
27Nov2012 - 12:28:00	62.02
27Nov2012 - 12:29:00	81.17
27Nov2012 - 12:30:00	70.56
27Nov2012 - 12:31:00	73.95
27Nov2012 - 12:32:00	50.74
27Nov2012 - 12:33:00	77.67
27Nov2012 - 12:34:00	44.15
27Nov2012 - 12:35:00	77.76
27Nov2012 - 12:36:00	83.07
27Nov2012 - 12:37:00	55.31
27Nov2012 - 12:38:00	29.61
27Nov2012 - 12:39:00	76.86
27Nov2012 - 12:40:00	63.59
27Nov2012 - 12:41:00	74.16
27Nov2012 - 12:42:00	82.62
27Nov2012 - 12:43:00	63.59
27Nov2012 - 12:44:00	78.29
27Nov2012 - 12:45:00	62.4
27Nov2012 - 12:46:00	60.67
27Nov2012 - 12:47:00	64.89
27Nov2012 - 12:48:00	54.27
27Nov2012 - 12:49:00	59.07
27Nov2012 - 12:50:00	58.91
27Nov2012 - 12:51:00	55.11
27Nov2012 - 12:52:00	56.39
27Nov2012 - 12:53:00	75.57
27Nov2012 - 12:54:00	71.72
27Nov2012 - 12:55:00	57.18
27Nov2012 - 12:56:00	46.29
27Nov2012 - 12:57:00	83.11
27Nov2012 - 12:58:00	91.23
27Nov2012 - 12:59:00	87.49
27Nov2012 - 13:00:00	81.03
27Nov2012 - 13:01:00	84.4
27Nov2012 - 13:02:00	93.49
27Nov2012 - 13:03:00	80.07
27Nov2012 - 13:04:00	86.23
27Nov2012 - 13:05:00	58.15
27Nov2012 - 13:06:00	73.58
27Nov2012 - 13:07:00	59.07
27Nov2012 - 13:08:00	59.95
27Nov2012 - 13:09:00	26.78
27Nov2012 - 13:10:00	59.28
27Nov2012 - 13:11:00	49.15
27Nov2012 - 13:12:00	54.81
27Nov2012 - 13:13:00	73.79
27Nov2012 - 13:14:00	59
27Nov2012 - 13:15:00	72.27
27Nov2012 - 13:16:00	32.52
27Nov2012 - 13:17:00	70.28
27Nov2012 - 13:18:00	47.63
27Nov2012 - 13:19:00	33.53
27Nov2012 - 13:20:00	56.21
27Nov2012 - 13:21:00	41.59
27Nov2012 - 13:22:00	69.31
27Nov2012 - 13:23:00	53.68
27Nov2012 - 13:24:00	65.42
27Nov2012 - 13:25:00	43.99
27Nov2012 - 13:26:00	65.44

27Nov2012 - 13:27:00	61.01

START WASH LOAD 4 (WASHER #1)

27Nov2012 - 13:28:00	47.42
27Nov2012 - 13:29:00	238.83
27Nov2012 - 13:30:00	594.56
27Nov2012 - 13:31:00	637.81
27Nov2012 - 13:32:00	348.68
27Nov2012 - 13:33:00	370.79
27Nov2012 - 13:34:00	248.08
27Nov2012 - 13:35:00	230.06
27Nov2012 - 13:36:00	259.8
27Nov2012 - 13:37:00	323.98
27Nov2012 - 13:38:00	335.7
27Nov2012 - 13:39:00	374.57
27Nov2012 - 13:40:00	425.19
27Nov2012 - 13:41:00	321.7
27Nov2012 - 13:42:00	235.56
27Nov2012 - 13:43:00	190.61
27Nov2012 - 13:44:00	236.61
27Nov2012 - 13:45:00	79.51
27Nov2012 - 13:46:00	257.56
27Nov2012 - 13:47:00	154.69
27Nov2012 - 13:48:00	57.52
27Nov2012 - 13:49:00	60.39
27Nov2012 - 13:50:00	103
27Nov2012 - 13:51:00	145.75
27Nov2012 - 13:52:00	74.74
27Nov2012 - 13:53:00	72.27
27Nov2012 - 13:54:00	71.76
27Nov2012 - 13:55:00	156.91
27Nov2012 - 13:56:00	59.55
27Nov2012 - 13:57:00	3.08
27Nov2012 - 13:58:00	98.17
27Nov2012 - 13:59:00	171.19
27Nov2012 - 14:00:00	340.94
27Nov2012 - 14:01:00	250.59
27Nov2012 - 14:02:00	207.87
27Nov2012 - 14:03:00	180.23
27Nov2012 - 14:04:00	174.37
27Nov2012 - 14:05:00	242.27
27Nov2012 - 14:06:00	101.63
27Nov2012 - 14:07:00	29.77
27Nov2012 - 14:08:00	218.71
27Nov2012 - 14:09:00	221.51
27Nov2012 - 14:10:00	97.3
27Nov2012 - 14:11:00	5.83
27Nov2012 - 14:12:00	160.62
27Nov2012 - 14:13:00	328.82
27Nov2012 - 14:14:00	231.45
27Nov2012 - 14:15:00	57.89
27Nov2012 - 14:16:00	23.96
27Nov2012 - 14:17:00	103.14
27Nov2012 - 14:18:00	143.3
27Nov2012 - 14:19:00	81.77
27Nov2012 - 14:20:00	37.48
27Nov2012 - 14:21:00	29.64
27Nov2012 - 14:22:00	38.47
27Nov2012 - 14:23:00	56.1
27Nov2012 - 14:24:00	103.11

27Nov2012 - 14:25:00	145.47
27Nov2012 - 14:26:00	931.1
27Nov2012 - 14:27:00	570.75
27Nov2012 - 14:28:00	182.19
27Nov2012 - 14:29:00	220.74
27Nov2012 - 14:30:00	203.92
27Nov2012 - 14:31:00	236.02
27Nov2012 - 14:32:00	239.47
27Nov2012 - 14:33:00	100.16
27Nov2012 - 14:34:00	81.12
27Nov2012 - 14:35:00	119.81
27Nov2012 - 14:36:00	90.36
27Nov2012 - 14:37:00	122.17
27Nov2012 - 14:38:00	29.94
27Nov2012 - 14:39:00	83.52
27Nov2012 - 14:40:00	214.97
27Nov2012 - 14:41:00	90.44
27Nov2012 - 14:42:00	76.44
27Nov2012 - 14:43:00	446.83
27Nov2012 - 14:44:00	111.46
27Nov2012 - 14:45:00	60.18
27Nov2012 - 14:46:00	-14.06
27Nov2012 - 14:47:00	54.14
27Nov2012 - 14:48:00	60.41
27Nov2012 - 14:49:00	-4.56
27Nov2012 - 14:50:00	1.91
27Nov2012 - 14:51:00	19.69
27Nov2012 - 14:52:00	15.77
27Nov2012 - 14:53:00	13.58
27Nov2012 - 14:54:00	15.05
27Nov2012 - 14:55:00	19.16
27Nov2012 - 14:56:00	14.62
27Nov2012 - 14:57:00	20.84
27Nov2012 - 14:58:00	30.82
27Nov2012 - 14:59:00	64.29
27Nov2012 - 15:00:00	46.92

END WASH LOAD 4 (WASHER #1)

AVERAGES	**163.1**
27Nov2012 - 15:01:00	31.99
27Nov2012 - 15:02:00	70.33
27Nov2012 - 15:03:00	59.42
27Nov2012 - 15:04:00	90.77
27Nov2012 - 15:05:00	73.04
27Nov2012 - 15:06:00	91.77
27Nov2012 - 15:07:00	77.63
27Nov2012 - 15:08:00	86.64
27Nov2012 - 15:09:00	102.26
27Nov2012 - 15:10:00	100.85
27Nov2012 - 15:11:00	88.1
27Nov2012 - 15:12:00	78.52
27Nov2012 - 15:13:00	73.52
27Nov2012 - 15:14:00	100.1
27Nov2012 - 15:15:00	90.25
27Nov2012 - 15:16:00	86.19
27Nov2012 - 15:17:00	97
27Nov2012 - 15:18:00	89.57
27Nov2012 - 15:19:00	52.57
27Nov2012 - 15:20:00	97.31
27Nov2012 - 15:21:00	86.16

27Nov2012 - 15:22:00	78.48
27Nov2012 - 15:23:00	58.89
27Nov2012 - 15:24:00	71.24
27Nov2012 - 15:25:00	69.8
27Nov2012 - 15:26:00	96.82
27Nov2012 - 15:27:00	101.2
27Nov2012 - 15:28:00	77.32
27Nov2012 - 15:29:00	100.16
27Nov2012 - 15:30:00	121.36
27Nov2012 - 15:31:00	91.47
27Nov2012 - 15:32:00	103.1
27Nov2012 - 15:33:00	77.14
27Nov2012 - 15:34:00	73.71
27Nov2012 - 15:35:00	74.42
27Nov2012 - 15:36:00	80.95
27Nov2012 - 15:37:00	52.92
27Nov2012 - 15:38:00	67.33
27Nov2012 - 15:39:00	72.74
27Nov2012 - 15:40:00	71.86
27Nov2012 - 15:41:00	69.57
27Nov2012 - 15:42:00	56.8
27Nov2012 - 15:43:00	84.39
27Nov2012 - 15:44:00	63.71
27Nov2012 - 15:45:00	90.1
27Nov2012 - 15:46:00	97.42
27Nov2012 - 15:47:00	94.07
27Nov2012 - 15:48:00	76.59
27Nov2012 - 15:49:00	65.08
27Nov2012 - 15:50:00	76.29
27Nov2012 - 15:51:00	71.44
27Nov2012 - 15:52:00	62.12
27Nov2012 - 15:53:00	98.52
27Nov2012 - 15:54:00	81.55
27Nov2012 - 15:55:00	67.68
27Nov2012 - 15:56:00	83.69
27Nov2012 - 15:57:00	58.73
27Nov2012 - 15:58:00	87.85
27Nov2012 - 15:59:00	77.09
27Nov2012 - 16:00:00	72.37
27Nov2012 - 16:01:00	70.93
27Nov2012 - 16:02:00	68.3
27Nov2012 - 16:03:00	68.54
27Nov2012 - 16:04:00	72.55
27Nov2012 - 16:05:00	76.86
27Nov2012 - 16:06:00	71.6
27Nov2012 - 16:07:00	88.65
27Nov2012 - 16:08:00	91.44
27Nov2012 - 16:09:00	101.23
27Nov2012 - 16:10:00	110.85
27Nov2012 - 16:11:00	118.69
27Nov2012 - 16:12:00	95.78
27Nov2012 - 16:13:00	98.62
27Nov2012 - 16:14:00	93.98
27Nov2012 - 16:15:00	100.35
27Nov2012 - 16:16:00	76.03
27Nov2012 - 16:17:00	74.49
27Nov2012 - 16:18:00	82.45
27Nov2012 - 16:19:00	50.98
27Nov2012 - 16:20:00	48.23
27Nov2012 - 16:21:00	59.72
27Nov2012 - 16:22:00	78.23

27Nov2012 - 16:23:00	71.21
27Nov2012 - 16:24:00	82.51
27Nov2012 - 16:25:00	49.21
27Nov2012 - 16:26:00	48.01
27Nov2012 - 16:27:00	90.8
27Nov2012 - 16:28:00	77.28
27Nov2012 - 16:29:00	87.47
27Nov2012 - 16:30:00	69.99
27Nov2012 - 16:31:00	67.57
27Nov2012 - 16:32:00	80.6
27Nov2012 - 16:33:00	96.5
27Nov2012 - 16:34:00	96.38
27Nov2012 - 16:35:00	76.91
27Nov2012 - 16:36:00	80.32
27Nov2012 - 16:37:00	70.36
27Nov2012 - 16:38:00	75
27Nov2012 - 16:39:00	48.91
27Nov2012 - 16:40:00	84.68
27Nov2012 - 16:41:00	41.7
27Nov2012 - 16:42:00	83.21
27Nov2012 - 16:43:00	80.76
27Nov2012 - 16:44:00	65.68
27Nov2012 - 16:45:00	67.96
27Nov2012 - 16:46:00	74.12
27Nov2012 - 16:47:00	65.28
27Nov2012 - 16:48:00	60.56
27Nov2012 - 16:49:00	70.89
27Nov2012 - 16:50:00	65.38
27Nov2012 - 16:51:00	74.39
27Nov2012 - 16:52:00	79.13
27Nov2012 - 16:53:00	81.11
27Nov2012 - 16:54:00	84.54
27Nov2012 - 16:55:00	108.4
27Nov2012 - 16:56:00	86.28
27Nov2012 - 16:57:00	68.45
27Nov2012 - 16:58:00	82.24
27Nov2012 - 16:59:00	74.79
27Nov2012 - 17:00:00	93.24
27Nov2012 - 17:01:00	87.89
27Nov2012 - 17:02:00	108.24
27Nov2012 - 17:03:00	94.95
27Nov2012 - 17:04:00	101.6
27Nov2012 - 17:05:00	81.38
27Nov2012 - 17:06:00	1033.56
27Nov2012 - 17:07:00	2914.25
27Nov2012 - 17:08:00	2918.35
27Nov2012 - 17:09:00	105.79
27Nov2012 - 17:10:00	24.26
27Nov2012 - 17:11:00	55.73
27Nov2012 - 17:12:00	83.42
27Nov2012 - 17:13:00	77.55
27Nov2012 - 17:14:00	110.27
27Nov2012 - 17:15:00	86.92
27Nov2012 - 17:16:00	86.78
27Nov2012 - 17:17:00	81.53
27Nov2012 - 17:18:00	98
27Nov2012 - 17:19:00	88.68
27Nov2012 - 17:20:00	91.3
27Nov2012 - 17:21:00	67.34
27Nov2012 - 17:22:00	93.86

START WASH LOAD 6 (WASHER #1)

27Nov2012 - 17:23:00	102.13
27Nov2012 - 17:24:00	95.53
27Nov2012 - 17:25:00	594.54
27Nov2012 - 17:26:00	821.13
27Nov2012 - 17:27:00	601.37
27Nov2012 - 17:28:00	293.1
27Nov2012 - 17:29:00	258.65
27Nov2012 - 17:30:00	285.96
27Nov2012 - 17:31:00	333.7
27Nov2012 - 17:32:00	375.55
27Nov2012 - 17:33:00	394.53
27Nov2012 - 17:34:00	403.34
27Nov2012 - 17:35:00	443.21
27Nov2012 - 17:36:00	508.2
27Nov2012 - 17:37:00	332.59
27Nov2012 - 17:38:00	180.96
27Nov2012 - 17:39:00	320.52
27Nov2012 - 17:40:00	174.77
27Nov2012 - 17:41:00	219.67
27Nov2012 - 17:42:00	203.79
27Nov2012 - 17:43:00	160.82
27Nov2012 - 17:44:00	153.46
27Nov2012 - 17:45:00	145.98
27Nov2012 - 17:46:00	77.56
27Nov2012 - 17:47:00	140.35
27Nov2012 - 17:48:00	79.2
27Nov2012 - 17:49:00	66.41
27Nov2012 - 17:50:00	79.12
27Nov2012 - 17:51:00	181.74
27Nov2012 - 17:52:00	17.16
27Nov2012 - 17:53:00	28.02
27Nov2012 - 17:54:00	255.22
27Nov2012 - 17:55:00	435.48
27Nov2012 - 17:56:00	375.96
27Nov2012 - 17:57:00	235.75
27Nov2012 - 17:58:00	111.31
27Nov2012 - 17:59:00	187.21
27Nov2012 - 18:00:00	156.52
27Nov2012 - 18:01:00	128.93
27Nov2012 - 18:02:00	73.36
27Nov2012 - 18:03:00	194.96
27Nov2012 - 18:04:00	271.34
27Nov2012 - 18:05:00	98.07
27Nov2012 - 18:06:00	37.76
27Nov2012 - 18:07:00	221.53
27Nov2012 - 18:08:00	394.41
27Nov2012 - 18:09:00	198.7
27Nov2012 - 18:10:00	47.48
27Nov2012 - 18:11:00	56.13
27Nov2012 - 18:12:00	113.82
27Nov2012 - 18:13:00	162.8
27Nov2012 - 18:14:00	85.4
27Nov2012 - 18:15:00	52.29
27Nov2012 - 18:16:00	16.54
27Nov2012 - 18:17:00	42.56
27Nov2012 - 18:18:00	75.66
27Nov2012 - 18:19:00	173.45
27Nov2012 - 18:20:00	1138.75
27Nov2012 - 18:21:00	453.27

27Nov2012 - 18:22:00	245.66	
27Nov2012 - 18:23:00	229.24	
27Nov2012 - 18:24:00	251.82	
27Nov2012 - 18:25:00	238.23	
27Nov2012 - 18:26:00	176.94	
27Nov2012 - 18:27:00	126.86	
27Nov2012 - 18:28:00	95.51	
27Nov2012 - 18:29:00	141.64	
27Nov2012 - 18:30:00	48.3	
27Nov2012 - 18:31:00	103.39	
27Nov2012 - 18:32:00	43.09	
27Nov2012 - 18:33:00	213.97	
27Nov2012 - 18:34:00	124.5	
27Nov2012 - 18:35:00	75.2	
27Nov2012 - 18:36:00	275.03	
27Nov2012 - 18:37:00	443.05	
27Nov2012 - 18:38:00	133.8	
27Nov2012 - 18:39:00	28.6	
27Nov2012 - 18:40:00	55.16	
27Nov2012 - 18:41:00	74.07	
27Nov2012 - 18:42:00	82.66	
27Nov2012 - 18:43:00	58.43	
27Nov2012 - 18:44:00	32.02	
27Nov2012 - 18:45:00	44.1	
27Nov2012 - 18:46:00	24.04	
27Nov2012 - 18:47:00	-8.72	
27Nov2012 - 18:48:00	18.04	
27Nov2012 - 18:49:00	30.82	
27Nov2012 - 18:50:00	-9.62	
27Nov2012 - 18:51:00	17.27	
27Nov2012 - 18:52:00	49.87	
27Nov2012 - 18:53:00	53.31	
27Nov2012 - 18:54:00	62.81	
END WASH LOAD 6 (WASHER #1)		
AVERAGES	**189.6**	
Daily Average	**174.3**	
27Nov2012 - 18:55:00	62.77	
27Nov2012 - 18:56:00	43.23	
27Nov2012 - 18:57:00	378.04	
27Nov2012 - 18:58:00	2883.38	
27Nov2012 - 18:59:00	2924.51	SPAN
27Nov2012 - 19:00:00	2901.42	
27Nov2012 - 19:01:00	1340.77	
27Nov2012 - 19:02:00	38.4	
27Nov2012 - 19:03:00	33.72	ZERO
27Nov2012 - 19:04:00	41.46	
27Nov2012 - 19:05:00	96.76	
27Nov2012 - 19:06:00	65.29	
27Nov2012 - 19:07:00	8.11	
27Nov2012 - 19:08:00	25.4	
27Nov2012 - 19:09:00	28.77	
27Nov2012 - 19:10:00	62.8	
27Nov2012 - 19:11:00	48.5	
27Nov2012 - 19:12:00	44.51	
27Nov2012 - 19:13:00	47.99	
27Nov2012 - 19:14:00	53.94	
27Nov2012 - 19:15:00	61.03	

27Nov2012 - 19:16:00	59.58
27Nov2012 - 19:17:00	63.86
27Nov2012 - 19:18:00	56.69
27Nov2012 - 19:19:00	51.71
27Nov2012 - 19:20:00	64.4
27Nov2012 - 19:21:00	73.32
27Nov2012 - 19:22:00	54.71
27Nov2012 - 19:23:00	65.16
27Nov2012 - 19:24:00	32.68
27Nov2012 - 19:25:00	66.19
27Nov2012 - 19:26:00	70.71
27Nov2012 - 19:27:00	71.48
27Nov2012 - 19:28:00	51.85
27Nov2012 - 19:29:00	26.72
27Nov2012 - 19:30:00	45.98
27Nov2012 - 19:31:00	50.76
27Nov2012 - 19:32:00	47.44
27Nov2012 - 19:33:00	49.54
27Nov2012 - 19:34:00	52.89
27Nov2012 - 19:35:00	25.85
27Nov2012 - 19:36:00	0.03
27Nov2012 - 19:37:00	35.1
27Nov2012 - 19:38:00	27.51
27Nov2012 - 19:39:00	11.22
27Nov2012 - 19:40:00	63.1
27Nov2012 - 19:41:00	32.33
27Nov2012 - 19:42:00	18.63
27Nov2012 - 19:43:00	61.09
27Nov2012 - 19:44:00	60.26
27Nov2012 - 19:45:00	64.97
27Nov2012 - 19:46:00	62.64
27Nov2012 - 19:47:00	82.07
27Nov2012 - 19:48:00	24.41
27Nov2012 - 19:49:00	25.87
27Nov2012 - 19:50:00	65.16
27Nov2012 - 19:51:00	84.23
27Nov2012 - 19:52:00	55.67
27Nov2012 - 19:53:00	-1.03
27Nov2012 - 19:54:00	29.54
27Nov2012 - 19:55:00	57.31
27Nov2012 - 19:56:00	55.88
27Nov2012 - 19:57:00	67.97
27Nov2012 - 19:58:00	70.67
27Nov2012 - 19:59:00	36.85
27Nov2012 - 20:00:00	29.72
27Nov2012 - 20:01:00	54.87
27Nov2012 - 20:02:00	50.14
27Nov2012 - 20:03:00	34.52
27Nov2012 - 20:04:00	54.17
27Nov2012 - 20:05:00	5.73
27Nov2012 - 20:06:00	57.17
27Nov2012 - 20:07:00	32.49
27Nov2012 - 20:08:00	48.91
27Nov2012 - 20:09:00	23.61
27Nov2012 - 20:10:00	20.59
27Nov2012 - 20:11:00	65.02
27Nov2012 - 20:12:00	43.36
27Nov2012 - 20:13:00	37.29
27Nov2012 - 20:14:00	37.4
27Nov2012 - 20:15:00	33.78
27Nov2012 - 20:16:00	31.36

27Nov2012 - 20:17:00	47.39
27Nov2012 - 20:18:00	40.36
27Nov2012 - 20:19:00	40.7
27Nov2012 - 20:20:00	34.52
27Nov2012 - 20:21:00	49.89
27Nov2012 - 20:22:00	44.44
27Nov2012 - 20:23:00	60.82
27Nov2012 - 20:24:00	53.3
27Nov2012 - 20:25:00	41.44
27Nov2012 - 20:26:00	36.78
27Nov2012 - 20:27:00	33.83
27Nov2012 - 20:28:00	52.31
27Nov2012 - 20:29:00	12
27Nov2012 - 20:30:00	25.39
27Nov2012 - 20:31:00	76.76
27Nov2012 - 20:32:00	17.47
27Nov2012 - 20:33:00	70.12
27Nov2012 - 20:34:00	50.58
27Nov2012 - 20:35:00	1243.99
27Nov2012 - 20:36:00	2826.16
27Nov2012 - 20:37:00	3539.38
27Nov2012 - 20:38:00	3849.7
27Nov2012 - 20:39:00	4045.45
27Nov2012 - 20:40:00	2131.35
27Nov2012 - 20:41:00	12.68

Ellis Washer # 1 - Shop Towels No Strip
G&K Services
Methods 1-4 Summary

Run No.	**W1 - STNS-1**	**W1 - STNS-2**	**W1 - STNS-3**	
Date:	**27-Nov-12**	**27-Nov-12**	**27-Nov-12**	
Start Time	**10:20**	**13:28**	**17:23**	
Stop Time	**11:50**	**15:01**	**18:54**	**AVERAGES**
Barometric Pressure, (inches of mercury)	29.99	29.99	29.99	29.99
Net Sampling Time, (minutes)	90.0	93.0	91.0	91.3
Wet Bulb Temp., (F)	35	36	35	35
Dry Bulb Temp., (F)	36	37	36	36
Calculated Saturation Constant	0.00682	0.00709	0.00682	0.0069
Moisture, (percent)	0.7	0.7	0.6	0.7
Dry Mole Fraction	0.9934	0.9932	0.9936	0.9934
CO_2 Concentration, (percent dry)	0.0	0.0	0.0	0.0
O_2 Concentration, (percent dry)	20.9	20.9	20.9	20.9
CO and N_2, (percent dry)	79.1	79.1	79.1	79.1
Dry Molecular Weight, (lb/lb mole)	28.84	28.84	28.84	28.84
Wet Molecular Weight, (lb/lb mole)	28.76	28.76	28.77	28.76
Excess Air at Stack, (percent)	-118750.0	-118750.0	-118750.0	-118750.0
Stack Area, (square inches)	28.3	28.3	28.3	28.3
Static Pressure, (inches of water)	-1.60	-1.60	-1.60	-1.60
Stack Pressure, (inches of mercury)	29.87	29.87	29.87	29.87
Average Stack Temperature, (°F)	36	37	36	36
Average Sqroot of ΔP	0.5134	0.4858	0.5037	0.5010
SDE Average	11.429	10.829	11.219	11.159
Pitot Coefficient	0.84	0.84	0.84	0.84
Stack Gas Velocity, (actual feet per minute - afpm)	1,680	1,592	1,649	1,640
Stack Flowrate, (actual cubic feet per minute - acfm)	330	313	324	322
Stack Flowrate, (standard cubic feet per minute - scfm)	351	332	344	342
Stack Flowrate, (dry standard cubic feet per minute - dscfm)	349	329	342	340

Method 2 Data Sheet

Washer 1

1

Plant	G+K	Date	11-27-2012
Location	Washer 1	Time	10:20

Stack Diameter		"	Area, A		ft^2
Barometric Pressure, P_b	29.99	"Hg	1 Meter Temp.		°F
% Moisture		$\%H_2O$	Stack O_2		%
Static Pressure, P_g	-1.6	$"H_2O$	Stack CO_2		%
Pitot Coefficient, C_p	.84		MW (wet)		lb/lb-mole

Port	Point	ΔP	$\sqrt{\Delta P}$	T_S (°F)	+ θ clockwise - θ counter-clockwise	$\sqrt{\Delta P}\cos\theta$	
A	1	.32		38	0		
	2	.26		38			
	3	.24		36	0		
	4	.30		35	+4°		
	5	.25		35	+4°		
	6	.28		35			
B	1	.24		35	0		
	2	.24		35			
	3	.24		35	0		
	4	.24		35	+4°		
	5	.28		35	+5°		
	6	.28		35			
		wet bulb		35			
	Average						

Average Absolute Temp. _____

Absolute Gas Temperature, $T_{ST} = T_S + 460°$

Absolute Gas Pressure, $P_S = P_b + P_g/13.6$ _____ "Hg

Gas Velocity, $V_s = (85.49)\ C_p\ \sqrt{\Delta P}\ avg\ \sqrt{\frac{T_{ST}\ avg}{P_S\ M_W}}$ _____ ft/sec

Actual Gas Flowrate, $Q_a = (V_s)\ (60)\ (A)$ _____ ACFM

Standard Gas Flowrate, $Q_{std} = \left[\frac{528°R}{T_{ST}}\right]\left[\frac{P_S}{29.92}\right]\left[\frac{100 - \%H_2O}{100}\right]Q_a$ _____ DSCFM

Washer 1
2

Method 2 Data Sheet

Plant	G+K	Date	11-27-2012
Location	Washer 1	Time	13:31

Stack Diameter	6	"	Area, A		ft^2
Barometric Pressure, P_b	29.99	"Hg	Meter Temp.		°F
% Moisture		$\%H_2O$	Stack O_2		%
Static Pressure, P_g	-1.6	$"H_2O$	Stack CO_2		%
Pitot Coefficient, C_p	.84		MW (wet)		lb/lb-mole

Port	Point	ΔP	$\sqrt{\Delta P}$	T_S (°F)	+ θ clockwise - θ counter-clockwise	$\sqrt{\Delta P}\cos\theta$	
A	1	.28		38			
	2	.25		37			
	3	.24		36			
	4	.22		36			
	5	.25		37			
	6	.24		37			
B	1	.21		37			
	2	.22		37			
	3	.21		37			
	4	.20		37			
	5	.24		39			
	6	.28		37			
		wetbulb		36			
	Average						
		Average Absolute Temp.					

Absolute Gas Temperature, $T_{ST} = T_S + 460°$

Absolute Gas Pressure, $P_S = P_b + P_g/13.6$ _____ "Hg

Gas Velocity, $V_s = (85.49)\ Cp\ \sqrt{\Delta P}\,avg\ \sqrt{\frac{T_{ST}\,avg}{P_S\ M_W}}$ _____ ft/sec

Actual Gas Flowrate, $Qa = (V_s)\ (60)\ (A)$ _____ ACFM

Standard Gas Flowrate, $Q_{std} = \left[\frac{528°R}{T_{ST}}\right]\left[\frac{P_S}{29.92}\right]\left[\frac{100 - \%H_2O}{100}\right]Qa$ _____ DSCFM

Method 2 Data Sheet

washer 1
3 (load 6)

Plant	G+K	Date	11-27-2012
Location	washer 1	Time	17:33

Stack Diameter	6	"	Area, A	ft^2
Barometric Pressure, P_b	29.99	"Hg	Meter Temp.	°F
% Moisture		%H_2O	Stack O_2	%
Static Pressure, P_g	-1.6	"H_2O	Stack CO_2	%
Pitot Coefficient, C_p	0.84		MW (wet)	lb/lb-mole

Port	Point	ΔP	$\sqrt{\Delta P}$	T_S (°F)	+ θ clockwise - θ counter-clockwise	$\sqrt{\Delta P}\cos\theta$	
A	1	.28		37			
	2	.27		36			
	3	.25		36			
	4	.27		36			
	5	.28		36			
	6	.28		36			
B	1	.24		36			
	2	.25		36			
	3	.23		36			
	4	.22		36			
	5	.23		36			
	6	.25		36			
		wet bulb		35°			
	Average						

Average Absolute Temp. _____

Absolute Gas Temperature, $T_{ST} = T_S + 460°$

Absolute Gas Pressure, $P_S = P_b + P_g/13.6$ _____ "Hg

Gas Velocity, $V_s = (85.49)\ C_p \sqrt{\Delta P}_{avg} \sqrt{\frac{T_{ST}\ avg}{P_S\ M_W}}$ _____ ft/sec

Actual Gas Flowrate, $Q_a = (V_s)\ (60)\ (A)$ _____ ACFM

Standard Gas Flowrate, $Q_{std} = \left[\frac{528°R}{T_{ST}}\right]\left[\frac{P_S}{29.92}\right]\left[\frac{100 - \%H_2O}{100}\right] Q_a$ _____ DSCFM

Shop Towel w/Strip

CEM CALIBRATION DATA
EPA Method 25A

Firm:	G&K	Analyzer:	California Analytical
Location:	Manchester, NH	Span Value (S):	8936
Operator	W Deveau	Analyzer Range:	30000
Sample Location:	Washer 1		
Date:	28-Nov-12		

TOTAL HYDROCARBONS

PRE-TEST Calibration Error Check:

	Cylinder ID	Cylinder Gas Conc. (Ca)	Analyzer Response (C)	Slope (m)	Predicted Response (pr)	Calibration Error (<5%) (ce)
Zero, C_O		0.0	0.13			
C_{low} (25-35% span)	xc0033311b	2922.0	2920.9	1.0001	2922.3	0.0%
C_{mid} (45-55% span)	cc349917	4940.0	4941.1	1.0001	4940.6	0.0%
C_{high} (80-90% span)	cc351430	8936.0	8937.1	1.0001	8937.0	0.0%

Calibration Drift Check:

Run No:		1	2	3	4	AVG
Time						
Initial Zero	C_{OI}	0.1	1.7			
Initial Span	C_{MI}	2920.9	2929.0			
Final Zero	C_{OF}	1.7	5.4			
Final Span	C_{MF}	2929.0	2928.9			
Calibration Drift (< 3%)	CD_O	0.0%	0.0%	0.0%	0.0%	
Calibration Drift (< 3%)	CD_M	-0.1%	0.0%			
THC Conc. (ppm, wet)	C_{THCavg}					

Nomenclature

C_{high}	Span gas analyzer response
C_O	Zero gas analyzer response
C_a	Cylinder gas value
C_{OI}	Initial calibration zero response
C_{OF}	Final calibration zero response
C_{MI}	Initial calibration upscale response
C_{MF}	Final calibration upscale response
CDo	Zero calibration drift
CDm	Upscale calibration drift
m	Slope
pr	Predicted response
ce	Calibration error
C	Analyzer response
S	Span
C_{NMHC}	Non-methane hydrocarbon concentration
C_{THC}	Total hydrocarbon concentration
C_{CH4}	Methane concentration

Calculations

$$m = (C_{high} - C_O) / C_a$$

$$pr = m \times C_a$$

$$ce = (C - pr) / C_a \times 100$$

$$CD_O = (C_{OI} - C_{OF}) / S$$

$$C_{NMHC} = C_{THC} - C_{CH4}$$

$$ER = C_{avg} \quad MW \quad 2.5962e\text{-}9 \quad Q \quad 60$$

where,

MW = molecular weight of methane, 16.04
2.5962e-9 = conversion from ppm to pounds per standard cubic feet.
60 = conversion from minutes to hour
Q = flow in units of standard cubic feet per minute

h:\stack\connecticut\projects\2012\g&k - manchester, nh\compliance testing\field data\nov 28 - shop towels with strip\[g&k - washer no. 1 emissions - shop towels - 11-28-2012.xls]calibrations 12/13/1

Cylinder Gas	THC (ppm) Washer1
Zero ID	
Zero Expiration	
Low ID	XC03311B
Low Expiration	42000
Low Concentration	2922
Mid ID	CC349917
Mid Expiration	7/7/2014
Mid Concentration	4940
High ID	CC351430
High Expiration	10/21/2014
High Concentration	8936

Calibration Error	THC (ppm) Washer1
Zero Response	0.13
Zero Error (%)	0
Low Response	2920.91
Low Error (%)	-0.04
Mid Response	4941.13
Mid Error (%)	0.02
High Response	8937.13
High Error (%)	0.01

Initial Bias	THC (ppm) Washer1
Zero Response	0
Zero Bias (%)	0
Span Concentration	2922
Span Response	0
Span Bias (%)	0

Shop Towels w/ Strip

Log Averages	THC (ppm) Washer1
28Nov2012 - 07:31:00	9.05
28Nov2012 - 07:32:00	19.41
28Nov2012 - 07:33:00	23.66
28Nov2012 - 07:34:00	37.41
28Nov2012 - 07:35:00	41.37
28Nov2012 - 07:36:00	18
28Nov2012 - 07:37:00	28.54
28Nov2012 - 07:38:00	48.96
28Nov2012 - 07:39:00	12.99
28Nov2012 - 07:40:00	63.86
28Nov2012 - 07:41:00	41.19
28Nov2012 - 07:42:00	22.66
28Nov2012 - 07:43:00	44.92
28Nov2012 - 07:44:00	70.23
28Nov2012 - 07:45:00	40.93
28Nov2012 - 07:46:00	42.64
28Nov2012 - 07:47:00	47.92
28Nov2012 - 07:48:00	119.25
28Nov2012 - 07:49:00	135.13
28Nov2012 - 07:50:00	115.38
28Nov2012 - 07:51:00	78.63
28Nov2012 - 07:52:00	103.22
28Nov2012 - 07:53:00	104.33
28Nov2012 - 07:54:00	132.59
28Nov2012 - 07:55:00	121.01
28Nov2012 - 07:56:00	113.58
28Nov2012 - 07:57:00	106.26
28Nov2012 - 07:58:00	123.62
28Nov2012 - 07:59:00	102.05
28Nov2012 - 08:00:00	95.68
28Nov2012 - 08:01:00	94.76
28Nov2012 - 08:02:00	88.76
28Nov2012 - 08:03:00	104
28Nov2012 - 08:04:00	100.5
28Nov2012 - 08:05:00	89.45
28Nov2012 - 08:06:00	90.72
28Nov2012 - 08:07:00	94.94
28Nov2012 - 08:08:00	104
28Nov2012 - 08:09:00	97.55
28Nov2012 - 08:10:00	91.29
28Nov2012 - 08:11:00	111.97
28Nov2012 - 08:12:00	105.78
28Nov2012 - 08:13:00	101.4
28Nov2012 - 08:14:00	93.72
28Nov2012 - 08:15:00	89.56
28Nov2012 - 08:16:00	95.75
28Nov2012 - 08:17:00	113.17
28Nov2012 - 08:18:00	75.26
28Nov2012 - 08:19:00	56.05
28Nov2012 - 08:20:00	71.31
28Nov2012 - 08:21:00	128.16
28Nov2012 - 08:22:00	116.09
28Nov2012 - 08:23:00	98.47
28Nov2012 - 08:24:00	94.41
28Nov2012 - 08:25:00	124.58
28Nov2012 - 08:26:00	66.84
28Nov2012 - 08:27:00	58.16
28Nov2012 - 08:28:00	63.61

Washer 1 Exhaust Summaries

Time	Ave THC Conc	MW	(SCFM)	lb/hr
0850 - 1055	204.3	12	338	0.13
1130 - 1334	182.8	12	328	0.11
1458 - 1659	198.4	12	338	0.13
Daily Average	195.1	12	335	0.12

28Nov2012 - 08:29:00	104.17
28Nov2012 - 08:30:00	79.97
28Nov2012 - 08:31:00	88.71
28Nov2012 - 08:32:00	69.79
28Nov2012 - 08:33:00	119.37
28Nov2012 - 08:34:00	83.13
28Nov2012 - 08:35:00	86.68
28Nov2012 - 08:36:00	104.86
28Nov2012 - 08:37:00	100.78
28Nov2012 - 08:38:00	86.61
28Nov2012 - 08:39:00	81.63
28Nov2012 - 08:40:00	95.66
28Nov2012 - 08:41:00	90.53
28Nov2012 - 08:42:00	107.54
28Nov2012 - 08:43:00	106.78
28Nov2012 - 08:44:00	90.37
28Nov2012 - 08:45:00	59.55
28Nov2012 - 08:46:00	87.09
28Nov2012 - 08:47:00	83.29
28Nov2012 - 08:48:00	105.83
28Nov2012 - 08:49:00	71.61

START WASH LOAD 1 (WASHER 1)

28Nov2012 - 08:50:00	122.35
28Nov2012 - 08:51:00	335.65
28Nov2012 - 08:52:00	385.84
28Nov2012 - 08:53:00	153.86
28Nov2012 - 08:54:00	527.06
28Nov2012 - 08:55:00	266.55
28Nov2012 - 08:56:00	376.43
28Nov2012 - 08:57:00	282.82
28Nov2012 - 08:58:00	133.33
28Nov2012 - 08:59:00	386.24
28Nov2012 - 09:00:00	572.75
28Nov2012 - 09:01:00	534.95
28Nov2012 - 09:02:00	671.74
28Nov2012 - 09:03:00	556.84
28Nov2012 - 09:04:00	649.34
28Nov2012 - 09:05:00	873.3
28Nov2012 - 09:06:00	1090.85
28Nov2012 - 09:07:00	1334.99
28Nov2012 - 09:08:00	1447.89
28Nov2012 - 09:09:00	442.34
28Nov2012 - 09:10:00	380.35
28Nov2012 - 09:11:00	170.26
28Nov2012 - 09:12:00	208.32
28Nov2012 - 09:13:00	168.12
28Nov2012 - 09:14:00	143.68
28Nov2012 - 09:15:00	203.11
28Nov2012 - 09:16:00	173.58
28Nov2012 - 09:17:00	155.52
28Nov2012 - 09:18:00	160.75
28Nov2012 - 09:19:00	134.34
28Nov2012 - 09:20:00	178.26
28Nov2012 - 09:21:00	185.53
28Nov2012 - 09:22:00	157.82
28Nov2012 - 09:23:00	193.67
28Nov2012 - 09:24:00	147.49
28Nov2012 - 09:25:00	183.89
28Nov2012 - 09:26:00	169.71

28Nov2012 - 09:27:00	186.02
28Nov2012 - 09:28:00	170.24
28Nov2012 - 09:29:00	209.66
28Nov2012 - 09:30:00	160.02
28Nov2012 - 09:31:00	212.76
28Nov2012 - 09:32:00	164.68
28Nov2012 - 09:33:00	196.44
28Nov2012 - 09:34:00	151.83
28Nov2012 - 09:35:00	159.88
28Nov2012 - 09:36:00	184.72
28Nov2012 - 09:37:00	115.45
28Nov2012 - 09:38:00	77.64
28Nov2012 - 09:39:00	75.4
28Nov2012 - 09:40:00	44.28
28Nov2012 - 09:41:00	66.12
28Nov2012 - 09:42:00	63.96
28Nov2012 - 09:43:00	33.07
28Nov2012 - 09:44:00	32.26
28Nov2012 - 09:45:00	44.62
28Nov2012 - 09:46:00	33.21
28Nov2012 - 09:47:00	61.54
28Nov2012 - 09:48:00	70.07
28Nov2012 - 09:49:00	66.84
28Nov2012 - 09:50:00	76.37
28Nov2012 - 09:51:00	68.78
28Nov2012 - 09:52:00	99.64
28Nov2012 - 09:53:00	65.82
28Nov2012 - 09:54:00	76.19
28Nov2012 - 09:55:00	84.26
28Nov2012 - 09:56:00	77.61
28Nov2012 - 09:57:00	99.34
28Nov2012 - 09:58:00	101.6
28Nov2012 - 09:59:00	66.95
28Nov2012 - 10:00:00	74.48
28Nov2012 - 10:01:00	103.68
28Nov2012 - 10:02:00	78.54
28Nov2012 - 10:03:00	95.38
28Nov2012 - 10:04:00	82.57
28Nov2012 - 10:05:00	97.25
28Nov2012 - 10:06:00	81.14
28Nov2012 - 10:07:00	104.79
28Nov2012 - 10:08:00	57.86
28Nov2012 - 10:09:00	127.54
28Nov2012 - 10:10:00	195.24
28Nov2012 - 10:11:00	138.88
28Nov2012 - 10:12:00	38.92
28Nov2012 - 10:13:00	107.01
28Nov2012 - 10:14:00	256.56
28Nov2012 - 10:15:00	171.37
28Nov2012 - 10:16:00	74.68
28Nov2012 - 10:17:00	56.2
28Nov2012 - 10:18:00	64.24
28Nov2012 - 10:19:00	149.2
28Nov2012 - 10:20:00	196.54
28Nov2012 - 10:21:00	1093.5
28Nov2012 - 10:22:00	502.92
28Nov2012 - 10:23:00	238.61
28Nov2012 - 10:24:00	211.18
28Nov2012 - 10:25:00	215.06
28Nov2012 - 10:26:00	242.93
28Nov2012 - 10:27:00	167.19

28Nov2012 - 10:28:00	117.32	
28Nov2012 - 10:29:00	166.15	
28Nov2012 - 10:30:00	84.35	
28Nov2012 - 10:31:00	137.18	
28Nov2012 - 10:32:00	80.96	
28Nov2012 - 10:33:00	68.09	
28Nov2012 - 10:34:00	235.27	
28Nov2012 - 10:35:00	130.4	
28Nov2012 - 10:36:00	67.62	
28Nov2012 - 10:37:00	337.14	
28Nov2012 - 10:38:00	366.81	
28Nov2012 - 10:39:00	141.24	
28Nov2012 - 10:40:00	73.76	
28Nov2012 - 10:41:00	40.29	
28Nov2012 - 10:42:00	128.97	
28Nov2012 - 10:43:00	98.84	
28Nov2012 - 10:44:00	35.19	
28Nov2012 - 10:45:00	36.97	
28Nov2012 - 10:46:00	24.21	
28Nov2012 - 10:47:00	37.11	
28Nov2012 - 10:48:00	17.6	
28Nov2012 - 10:49:00	65.81	
28Nov2012 - 10:50:00	79.52	
28Nov2012 - 10:51:00	113.89	
28Nov2012 - 10:52:00	152.6	
28Nov2012 - 10:53:00	99.63	
28Nov2012 - 10:54:00	64.96	
28Nov2012 - 10:55:00	54.33	
END WASH LOAD 1 (WASHER 1)		
AVERAGES	**204.3**	
28Nov2012 - 10:56:00	58.01	
28Nov2012 - 10:57:00	150.96	
28Nov2012 - 10:58:00	163.4	
28Nov2012 - 10:59:00	168.79	
28Nov2012 - 11:00:00	138.46	
28Nov2012 - 11:01:00	132.39	
28Nov2012 - 11:02:00	143.03	
28Nov2012 - 11:03:00	149.23	
28Nov2012 - 11:04:00	143	
28Nov2012 - 11:05:00	110.15	
28Nov2012 - 11:06:00	10.3	
28Nov2012 - 11:07:00	1.66	ZERO
28Nov2012 - 11:08:00	1385.17	
28Nov2012 - 11:09:00	2923.05	
28Nov2012 - 11:10:00	2928.98	SPAN
28Nov2012 - 11:11:00	1770.75	
28Nov2012 - 11:12:00	107.54	
28Nov2012 - 11:13:00	120.99	
28Nov2012 - 11:14:00	126.84	
28Nov2012 - 11:15:00	141.68	
28Nov2012 - 11:16:00	105.83	
28Nov2012 - 11:17:00	82.06	
28Nov2012 - 11:18:00	137.27	
28Nov2012 - 11:19:00	144.89	
28Nov2012 - 11:20:00	111.6	
28Nov2012 - 11:21:00	119.95	
28Nov2012 - 11:22:00	135.19	
28Nov2012 - 11:23:00	82.27	
28Nov2012 - 11:24:00	72.35	

28Nov2012 - 11:25:00	91.85
28Nov2012 - 11:26:00	62.09
28Nov2012 - 11:27:00	65.25
28Nov2012 - 11:28:00	70.22
28Nov2012 - 11:29:00	22.07

START WASH LOAD 3 (WASHER 1)

28Nov2012 - 11:30:00	86.89
28Nov2012 - 11:31:00	205.88
28Nov2012 - 11:32:00	708.83
28Nov2012 - 11:33:00	634.36
28Nov2012 - 11:34:00	366.36
28Nov2012 - 11:35:00	226.46
28Nov2012 - 11:36:00	161.91
28Nov2012 - 11:37:00	152.44
28Nov2012 - 11:38:00	166.27
28Nov2012 - 11:39:00	201.41
28Nov2012 - 11:40:00	239.55
28Nov2012 - 11:41:00	255.23
28Nov2012 - 11:42:00	262.01
28Nov2012 - 11:43:00	287.99
28Nov2012 - 11:44:00	332.68
28Nov2012 - 11:45:00	425.79
28Nov2012 - 11:46:00	458.03
28Nov2012 - 11:47:00	491.1
28Nov2012 - 11:48:00	634.95
28Nov2012 - 11:49:00	825.74
28Nov2012 - 11:50:00	1010.81
28Nov2012 - 11:51:00	1086.95
28Nov2012 - 11:52:00	707.53
28Nov2012 - 11:53:00	163.32
28Nov2012 - 11:54:00	161.94
28Nov2012 - 11:55:00	119.77
28Nov2012 - 11:56:00	126.73
28Nov2012 - 11:57:00	128.28
28Nov2012 - 11:58:00	136.19
28Nov2012 - 11:59:00	127.5
28Nov2012 - 12:00:00	154.74
28Nov2012 - 12:01:00	137.63
28Nov2012 - 12:02:00	142.54
28Nov2012 - 12:03:00	135.83
28Nov2012 - 12:04:00	114.64
28Nov2012 - 12:05:00	118.94
28Nov2012 - 12:06:00	130.26
28Nov2012 - 12:07:00	141.69
28Nov2012 - 12:08:00	126.92
28Nov2012 - 12:09:00	112.46
28Nov2012 - 12:10:00	143.12
28Nov2012 - 12:11:00	124.43
28Nov2012 - 12:12:00	135.62
28Nov2012 - 12:13:00	113.28
28Nov2012 - 12:14:00	103.96
28Nov2012 - 12:15:00	146.2
28Nov2012 - 12:16:00	106.99
28Nov2012 - 12:17:00	128.6
28Nov2012 - 12:18:00	130.49
28Nov2012 - 12:19:00	141.91
28Nov2012 - 12:20:00	115.11
28Nov2012 - 12:21:00	39.44
28Nov2012 - 12:22:00	45.48

28Nov2012 - 12:23:00	16.46
28Nov2012 - 12:24:00	28.27
28Nov2012 - 12:25:00	22
28Nov2012 - 12:26:00	-23.89
28Nov2012 - 12:27:00	-25.53
28Nov2012 - 12:28:00	-37.41
28Nov2012 - 12:29:00	9.52
28Nov2012 - 12:30:00	-10.87
28Nov2012 - 12:31:00	54.24
28Nov2012 - 12:32:00	62.98
28Nov2012 - 12:33:00	105.87
28Nov2012 - 12:34:00	65.57
28Nov2012 - 12:35:00	94.31
28Nov2012 - 12:36:00	101.93
28Nov2012 - 12:37:00	51.64
28Nov2012 - 12:38:00	107.93
28Nov2012 - 12:39:00	102.11
28Nov2012 - 12:40:00	109.84
28Nov2012 - 12:41:00	89.01
28Nov2012 - 12:42:00	90.85
28Nov2012 - 12:43:00	78.67
28Nov2012 - 12:44:00	52.07
28Nov2012 - 12:45:00	33.09
28Nov2012 - 12:46:00	134.85
28Nov2012 - 12:47:00	110.79
28Nov2012 - 12:48:00	109.71
28Nov2012 - 12:49:00	101.51
28Nov2012 - 12:50:00	112.1
28Nov2012 - 12:51:00	83.38
28Nov2012 - 12:52:00	21.93
28Nov2012 - 12:53:00	296.54
28Nov2012 - 12:54:00	215.5
28Nov2012 - 12:55:00	46.82
28Nov2012 - 12:56:00	175.13
28Nov2012 - 12:57:00	280.79
28Nov2012 - 12:58:00	127.49
28Nov2012 - 12:59:00	58.35
28Nov2012 - 13:00:00	74.55
28Nov2012 - 13:01:00	86.31
28Nov2012 - 13:02:00	75.61
28Nov2012 - 13:03:00	1135.09
28Nov2012 - 13:04:00	756.48
28Nov2012 - 13:05:00	293.94
28Nov2012 - 13:06:00	221.25
28Nov2012 - 13:07:00	234.44
28Nov2012 - 13:08:00	209.76
28Nov2012 - 13:09:00	189.76
28Nov2012 - 13:10:00	157.89
28Nov2012 - 13:11:00	118.72
28Nov2012 - 13:12:00	131.9
28Nov2012 - 13:13:00	58.65
28Nov2012 - 13:14:00	105.99
28Nov2012 - 13:15:00	300.24
28Nov2012 - 13:16:00	171.09
28Nov2012 - 13:17:00	44.55
28Nov2012 - 13:18:00	457.22
28Nov2012 - 13:19:00	391.5
28Nov2012 - 13:20:00	151.2
28Nov2012 - 13:21:00	54.89
28Nov2012 - 13:22:00	20.13
28Nov2012 - 13:23:00	101.74

28Nov2012 - 13:24:00	73.07
28Nov2012 - 13:25:00	39.67
28Nov2012 - 13:26:00	30.65
28Nov2012 - 13:27:00	44.85
28Nov2012 - 13:28:00	36.51
28Nov2012 - 13:29:00	46.84
28Nov2012 - 13:30:00	33.16
28Nov2012 - 13:31:00	68.13
28Nov2012 - 13:32:00	57.57
28Nov2012 - 13:33:00	71.01
28Nov2012 - 13:34:00	63.33

END WASH LOAD 3 (WASHER 1)

AVERAGES	**182.8**
28Nov2012 - 13:35:00	70.09
28Nov2012 - 13:36:00	63.75
28Nov2012 - 13:37:00	83.41
28Nov2012 - 13:38:00	23.24
28Nov2012 - 13:39:00	54.24
28Nov2012 - 13:40:00	96.12
28Nov2012 - 13:41:00	47.6
28Nov2012 - 13:42:00	74.84
28Nov2012 - 13:43:00	121.77
28Nov2012 - 13:44:00	83.04
28Nov2012 - 13:45:00	115.77
28Nov2012 - 13:46:00	135.68
28Nov2012 - 13:47:00	130.83
28Nov2012 - 13:48:00	134.67
28Nov2012 - 13:49:00	137.11
28Nov2012 - 13:50:00	146.75
28Nov2012 - 13:51:00	113.51
28Nov2012 - 13:52:00	97.66
28Nov2012 - 13:53:00	57.45
28Nov2012 - 13:54:00	66.72
28Nov2012 - 13:55:00	89.35
28Nov2012 - 13:56:00	89.73
28Nov2012 - 13:57:00	82
28Nov2012 - 13:58:00	68.83
28Nov2012 - 13:59:00	139.44
28Nov2012 - 14:00:00	103.2
28Nov2012 - 14:01:00	116.65
28Nov2012 - 14:02:00	113.62
28Nov2012 - 14:03:00	99.97
28Nov2012 - 14:04:00	100.68
28Nov2012 - 14:05:00	86.31
28Nov2012 - 14:06:00	128.57
28Nov2012 - 14:07:00	113.81
28Nov2012 - 14:08:00	142.44
28Nov2012 - 14:09:00	132.8
28Nov2012 - 14:10:00	158.1
28Nov2012 - 14:11:00	161.42
28Nov2012 - 14:12:00	133.61
28Nov2012 - 14:13:00	152.8
28Nov2012 - 14:14:00	143.54
28Nov2012 - 14:15:00	136.07
28Nov2012 - 14:16:00	169.15
28Nov2012 - 14:17:00	189.27
28Nov2012 - 14:18:00	132.4
28Nov2012 - 14:19:00	137.89
28Nov2012 - 14:20:00	144.26

28Nov2012 - 14:21:00	119.72
28Nov2012 - 14:22:00	142.18
28Nov2012 - 14:23:00	97.71
28Nov2012 - 14:24:00	133.31
28Nov2012 - 14:25:00	140.62
28Nov2012 - 14:26:00	66.17
28Nov2012 - 14:27:00	70.93
28Nov2012 - 14:28:00	73.16
28Nov2012 - 14:29:00	111.73
28Nov2012 - 14:30:00	107.19
28Nov2012 - 14:31:00	116.46
28Nov2012 - 14:32:00	104.38
28Nov2012 - 14:33:00	78.35
28Nov2012 - 14:34:00	120.69
28Nov2012 - 14:35:00	97.94
28Nov2012 - 14:36:00	95.4
28Nov2012 - 14:37:00	70.42
28Nov2012 - 14:38:00	102.32
28Nov2012 - 14:39:00	123.54
28Nov2012 - 14:40:00	121.59
28Nov2012 - 14:41:00	91.57
28Nov2012 - 14:42:00	91.32
28Nov2012 - 14:43:00	86.4
28Nov2012 - 14:44:00	90.09
28Nov2012 - 14:45:00	95.24
28Nov2012 - 14:46:00	129.27
28Nov2012 - 14:47:00	126.64
28Nov2012 - 14:48:00	108.64
28Nov2012 - 14:49:00	87.09
28Nov2012 - 14:50:00	110.51
28Nov2012 - 14:51:00	94.25
28Nov2012 - 14:52:00	83.7
28Nov2012 - 14:53:00	104.95
28Nov2012 - 14:54:00	108.71
28Nov2012 - 14:55:00	104.23
28Nov2012 - 14:56:00	98.17
28Nov2012 - 14:57:00	100.01

START WASH LOAD 5 (WASHER 1)

28Nov2012 - 14:58:00	97.91
28Nov2012 - 14:59:00	87.67
28Nov2012 - 15:00:00	636.93
28Nov2012 - 15:01:00	733.9
28Nov2012 - 15:02:00	582.74
28Nov2012 - 15:03:00	348.33
28Nov2012 - 15:04:00	244.75
28Nov2012 - 15:05:00	212.53
28Nov2012 - 15:06:00	244.04
28Nov2012 - 15:07:00	259.33
28Nov2012 - 15:08:00	287.43
28Nov2012 - 15:09:00	272.66
28Nov2012 - 15:10:00	297.9
28Nov2012 - 15:11:00	355.74
28Nov2012 - 15:12:00	375.23
28Nov2012 - 15:13:00	462.13
28Nov2012 - 15:14:00	462.95
28Nov2012 - 15:15:00	494.36
28Nov2012 - 15:16:00	606.53
28Nov2012 - 15:17:00	721.85
28Nov2012 - 15:18:00	891.83

28Nov2012 - 15:19:00	1046.05
28Nov2012 - 15:20:00	800.04
28Nov2012 - 15:21:00	191.76
28Nov2012 - 15:22:00	175.18
28Nov2012 - 15:23:00	167.38
28Nov2012 - 15:24:00	156.76
28Nov2012 - 15:25:00	126.18
28Nov2012 - 15:26:00	132.59
28Nov2012 - 15:27:00	136.46
28Nov2012 - 15:28:00	201.71
28Nov2012 - 15:29:00	185.32
28Nov2012 - 15:30:00	174.57
28Nov2012 - 15:31:00	178.47
28Nov2012 - 15:32:00	165.69
28Nov2012 - 15:33:00	143.43
28Nov2012 - 15:34:00	158.94
28Nov2012 - 15:35:00	182.97
28Nov2012 - 15:36:00	190.29
28Nov2012 - 15:37:00	196.14
28Nov2012 - 15:38:00	182.63
28Nov2012 - 15:39:00	207.49
28Nov2012 - 15:40:00	183.73
28Nov2012 - 15:41:00	216.54
28Nov2012 - 15:42:00	181.34
28Nov2012 - 15:43:00	196.24
28Nov2012 - 15:44:00	196.9
28Nov2012 - 15:45:00	205.76
28Nov2012 - 15:46:00	148.87
28Nov2012 - 15:47:00	148.42
28Nov2012 - 15:48:00	199.54
28Nov2012 - 15:49:00	86.27
28Nov2012 - 15:50:00	74.15
28Nov2012 - 15:51:00	102.11
28Nov2012 - 15:52:00	56.65
28Nov2012 - 15:53:00	83.13
28Nov2012 - 15:54:00	44.83
28Nov2012 - 15:55:00	38.03
28Nov2012 - 15:56:00	45.68
28Nov2012 - 15:57:00	28.75
28Nov2012 - 15:58:00	45.43
28Nov2012 - 15:59:00	88.87
28Nov2012 - 16:00:00	103.11
28Nov2012 - 16:01:00	87.53
28Nov2012 - 16:02:00	52.4
28Nov2012 - 16:03:00	102.46
28Nov2012 - 16:04:00	68.43
28Nov2012 - 16:05:00	73.41
28Nov2012 - 16:06:00	82.14
28Nov2012 - 16:07:00	78.12
28Nov2012 - 16:08:00	113.32
28Nov2012 - 16:09:00	69.79
28Nov2012 - 16:10:00	109.52
28Nov2012 - 16:11:00	109.01
28Nov2012 - 16:12:00	73.78
28Nov2012 - 16:13:00	108.92
28Nov2012 - 16:14:00	138.03
28Nov2012 - 16:15:00	142.63
28Nov2012 - 16:16:00	68.94
28Nov2012 - 16:17:00	107.86
28Nov2012 - 16:18:00	78.44
28Nov2012 - 16:19:00	2.68

28Nov2012 - 16:20:00	82.36
28Nov2012 - 16:21:00	220.67
28Nov2012 - 16:22:00	56.16
28Nov2012 - 16:23:00	118.45
28Nov2012 - 16:24:00	222.17
28Nov2012 - 16:25:00	181.92
28Nov2012 - 16:26:00	63.92
28Nov2012 - 16:27:00	74.8
28Nov2012 - 16:28:00	71.8
28Nov2012 - 16:29:00	89.43
28Nov2012 - 16:30:00	123.57
28Nov2012 - 16:31:00	1026.26
28Nov2012 - 16:32:00	676.46
28Nov2012 - 16:33:00	247.19
28Nov2012 - 16:34:00	161.75
28Nov2012 - 16:35:00	148.71
28Nov2012 - 16:36:00	165.86
28Nov2012 - 16:37:00	101.44
28Nov2012 - 16:38:00	96.25
28Nov2012 - 16:39:00	70.72
28Nov2012 - 16:40:00	118.03
28Nov2012 - 16:41:00	237.19
28Nov2012 - 16:42:00	109.27
28Nov2012 - 16:43:00	76.34
28Nov2012 - 16:44:00	479.11
28Nov2012 - 16:45:00	359.52
28Nov2012 - 16:46:00	84.83
28Nov2012 - 16:47:00	16.22
28Nov2012 - 16:48:00	13.53
28Nov2012 - 16:49:00	124.25
28Nov2012 - 16:50:00	82.61
28Nov2012 - 16:51:00	34.6
28Nov2012 - 16:52:00	69.4
28Nov2012 - 16:53:00	72.79
28Nov2012 - 16:54:00	76.87
28Nov2012 - 16:55:00	37.45
28Nov2012 - 16:56:00	64.2
28Nov2012 - 16:57:00	60.24
28Nov2012 - 16:58:00	93.59
28Nov2012 - 16:59:00	70.27

END WASH LOAD 5 (WASHER 1)

AVERAGES	**198.4**
DAILY AVERAGE	**195.1**

28Nov2012 - 17:00:00	63.81
28Nov2012 - 17:01:00	58.88
28Nov2012 - 17:02:00	69.54
28Nov2012 - 17:03:00	72.67
28Nov2012 - 17:04:00	78.97
28Nov2012 - 17:05:00	96.18
28Nov2012 - 17:06:00	71.7
28Nov2012 - 17:07:00	73.82
28Nov2012 - 17:08:00	63.54
28Nov2012 - 17:09:00	74.72
28Nov2012 - 17:10:00	55.9
28Nov2012 - 17:11:00	110.57
28Nov2012 - 17:12:00	72.95
28Nov2012 - 17:13:00	177.09
28Nov2012 - 17:14:00	112.16

28Nov2012 - 17:15:00	125.62	
28Nov2012 - 17:16:00	122.96	
28Nov2012 - 17:17:00	182.39	
28Nov2012 - 17:18:00	186.06	
28Nov2012 - 17:19:00	175.93	
28Nov2012 - 17:20:00	180.87	
28Nov2012 - 17:21:00	156.6	
28Nov2012 - 17:22:00	181.15	
28Nov2012 - 17:23:00	186.31	
28Nov2012 - 17:24:00	153.14	
28Nov2012 - 17:25:00	201.37	
28Nov2012 - 17:26:00	193.28	
28Nov2012 - 17:27:00	186.26	
28Nov2012 - 17:28:00	205.43	
28Nov2012 - 17:29:00	172.82	
28Nov2012 - 17:30:00	200.06	
28Nov2012 - 17:31:00	195.05	
28Nov2012 - 17:32:00	201.54	
28Nov2012 - 17:33:00	151.2	
28Nov2012 - 17:34:00	72.81	
28Nov2012 - 17:35:00	94.57	
28Nov2012 - 17:36:00	100.86	
28Nov2012 - 17:37:00	146.91	
28Nov2012 - 17:38:00	111.04	
28Nov2012 - 17:39:00	110.46	
28Nov2012 - 17:40:00	168.55	
28Nov2012 - 17:41:00	172.17	
28Nov2012 - 17:42:00	163.08	
28Nov2012 - 17:43:00	144.32	
28Nov2012 - 17:44:00	144.35	
28Nov2012 - 17:45:00	134.71	
28Nov2012 - 17:46:00	757.31	
28Nov2012 - 17:47:00	5.41	ZERO
28Nov2012 - 17:48:00	93.36	
28Nov2012 - 17:49:00	1739.4	
28Nov2012 - 17:50:00	2904.43	
28Nov2012 - 17:51:00	2928.9	SPAN
28Nov2012 - 17:52:00	1556.98	
28Nov2012 - 17:53:00	187.63	
28Nov2012 - 17:54:00	191.27	
28Nov2012 - 17:55:00	138.9	
28Nov2012 - 17:56:00	170.16	
28Nov2012 - 17:57:00	111.5	
28Nov2012 - 17:58:00	112.65	
28Nov2012 - 17:59:00	133.37	
28Nov2012 - 18:00:00	113.46	
28Nov2012 - 18:01:00	148.78	
28Nov2012 - 18:02:00	128.96	
28Nov2012 - 18:03:00	133.27	
28Nov2012 - 18:04:00	127.26	
28Nov2012 - 18:05:00	143.98	
28Nov2012 - 18:06:00	154.01	
28Nov2012 - 18:07:00	151.87	
28Nov2012 - 18:08:00	103.95	
28Nov2012 - 18:09:00	127.6	
28Nov2012 - 18:10:00	85.5	
28Nov2012 - 18:11:00	76.99	
28Nov2012 - 18:12:00	92.92	
28Nov2012 - 18:13:00	148.11	
28Nov2012 - 18:14:00	145.98	
28Nov2012 - 18:15:00	79.25	

28Nov2012 - 18:16:00	85.17
28Nov2012 - 18:17:00	147.65
28Nov2012 - 18:18:00	146.84
28Nov2012 - 18:19:00	100.45
28Nov2012 - 18:20:00	139.25
28Nov2012 - 18:21:00	151.62
28Nov2012 - 18:22:00	109.26
28Nov2012 - 18:23:00	130.67
28Nov2012 - 18:24:00	76.68
28Nov2012 - 18:25:00	127.37
28Nov2012 - 18:26:00	113.41
28Nov2012 - 18:27:00	117.91
28Nov2012 - 18:28:00	103.4
28Nov2012 - 18:29:00	84.81
28Nov2012 - 18:30:00	75.81
28Nov2012 - 18:31:00	145.99
28Nov2012 - 18:32:00	128.39
28Nov2012 - 18:33:00	141.07
28Nov2012 - 18:34:00	139.53
28Nov2012 - 18:35:00	166.4
28Nov2012 - 18:36:00	144.56
28Nov2012 - 18:37:00	161.17
28Nov2012 - 18:38:00	171.75
28Nov2012 - 18:39:00	164.86
28Nov2012 - 18:40:00	111.13
28Nov2012 - 18:41:00	126.52
28Nov2012 - 18:42:00	128.48
28Nov2012 - 18:43:00	166.86
28Nov2012 - 18:44:00	155.42
28Nov2012 - 18:45:00	157.47
28Nov2012 - 18:46:00	172.73
28Nov2012 - 18:47:00	141.77
28Nov2012 - 18:48:00	118.33
28Nov2012 - 18:49:00	62.85
28Nov2012 - 18:50:00	73.34
28Nov2012 - 18:51:00	228.41
28Nov2012 - 18:52:00	248.67
28Nov2012 - 18:53:00	80.61
28Nov2012 - 18:54:00	74.49
28Nov2012 - 18:55:00	48.91
28Nov2012 - 18:56:00	80.14
28Nov2012 - 18:57:00	80.4
28Nov2012 - 18:58:00	70.55
28Nov2012 - 18:59:00	81.42
28Nov2012 - 19:00:00	105.57
28Nov2012 - 19:01:00	101.07
28Nov2012 - 19:02:00	62.36
28Nov2012 - 19:03:00	93
28Nov2012 - 19:04:00	64.16
28Nov2012 - 19:05:00	78.83
28Nov2012 - 19:06:00	70.15
28Nov2012 - 19:07:00	71.38
28Nov2012 - 19:08:00	65.96
28Nov2012 - 19:09:00	66.24
28Nov2012 - 19:10:00	66.03
28Nov2012 - 19:11:00	65.04
28Nov2012 - 19:12:00	55.56
28Nov2012 - 19:13:00	61.58
28Nov2012 - 19:14:00	71.82
28Nov2012 - 19:15:00	71.36
28Nov2012 - 19:16:00	70.36

28Nov2012 - 19:17:00	47.71
28Nov2012 - 19:18:00	93.09
28Nov2012 - 19:19:00	64.55
28Nov2012 - 19:20:00	92.47
28Nov2012 - 19:21:00	81.95
28Nov2012 - 19:22:00	45.42
28Nov2012 - 19:23:00	63.05
28Nov2012 - 19:24:00	62.59
28Nov2012 - 19:25:00	61.28
28Nov2012 - 19:26:00	45.49
28Nov2012 - 19:27:00	55.48
28Nov2012 - 19:28:00	86.1
28Nov2012 - 19:29:00	104.74
28Nov2012 - 19:30:00	130.87
28Nov2012 - 19:31:00	142.94
28Nov2012 - 19:32:00	161.67
28Nov2012 - 19:33:00	166.61
28Nov2012 - 19:34:00	104.39
28Nov2012 - 19:35:00	121.25
28Nov2012 - 19:36:00	153.44
28Nov2012 - 19:37:00	120.59
28Nov2012 - 19:38:00	124.71
28Nov2012 - 19:39:00	93.83
28Nov2012 - 19:40:00	98.93
28Nov2012 - 19:41:00	87.3
28Nov2012 - 19:42:00	128.2
28Nov2012 - 19:43:00	143.05
28Nov2012 - 19:44:00	116.29
28Nov2012 - 19:45:00	143.29
28Nov2012 - 19:46:00	129.07
28Nov2012 - 19:47:00	112.72
28Nov2012 - 19:48:00	121.33
28Nov2012 - 19:49:00	101.71
28Nov2012 - 19:50:00	94.98
28Nov2012 - 19:51:00	110.35
28Nov2012 - 19:52:00	109.23
28Nov2012 - 19:53:00	131.2
28Nov2012 - 19:54:00	138.1
28Nov2012 - 19:55:00	83.03
28Nov2012 - 19:56:00	139.09
28Nov2012 - 19:57:00	115.67
28Nov2012 - 19:58:00	78.26
28Nov2012 - 19:59:00	104.44
28Nov2012 - 20:00:00	101.51
28Nov2012 - 20:01:00	148.32
28Nov2012 - 20:02:00	119.67
28Nov2012 - 20:03:00	91.8
28Nov2012 - 20:04:00	85.38
28Nov2012 - 20:05:00	113.81
28Nov2012 - 20:06:00	107.53
28Nov2012 - 20:07:00	118.1
28Nov2012 - 20:08:00	116.99
28Nov2012 - 20:09:00	114.82
28Nov2012 - 20:10:00	142.02
28Nov2012 - 20:11:00	73.68
28Nov2012 - 20:12:00	81.19
28Nov2012 - 20:13:00	115.69
28Nov2012 - 20:14:00	94.42
28Nov2012 - 20:15:00	110.25
28Nov2012 - 20:16:00	101.51
28Nov2012 - 20:17:00	98.79

28Nov2012 - 20:18:00	102.22
28Nov2012 - 20:19:00	147.12
28Nov2012 - 20:20:00	124.07
28Nov2012 - 20:21:00	133.28
28Nov2012 - 20:22:00	140.66
28Nov2012 - 20:23:00	123.68
28Nov2012 - 20:24:00	131.2
28Nov2012 - 20:25:00	125.89
28Nov2012 - 20:26:00	142.64
28Nov2012 - 20:27:00	55.53
28Nov2012 - 20:28:00	84.69
28Nov2012 - 20:29:00	100.22
28Nov2012 - 20:30:00	124.14
28Nov2012 - 20:31:00	82.84
28Nov2012 - 20:32:00	114.38
28Nov2012 - 20:33:00	119.64
28Nov2012 - 20:34:00	140.59
28Nov2012 - 20:35:00	121.49
28Nov2012 - 20:36:00	143.98
28Nov2012 - 20:37:00	68.98
28Nov2012 - 20:38:00	109.26
28Nov2012 - 20:39:00	95.3
28Nov2012 - 20:40:00	97.8
28Nov2012 - 20:41:00	94.56
28Nov2012 - 20:42:00	129.22
28Nov2012 - 20:43:00	130.39
28Nov2012 - 20:44:00	119.45
28Nov2012 - 20:45:00	71.33
28Nov2012 - 20:46:00	80.93
28Nov2012 - 20:47:00	78.94
28Nov2012 - 20:48:00	117.66
28Nov2012 - 20:49:00	89.4
28Nov2012 - 20:50:00	131.15
28Nov2012 - 20:51:00	99.89
28Nov2012 - 20:52:00	91.19
28Nov2012 - 20:53:00	133.94
28Nov2012 - 20:54:00	116.11
28Nov2012 - 20:55:00	105.85
28Nov2012 - 20:56:00	115.95
28Nov2012 - 20:57:00	115.1
28Nov2012 - 20:58:00	109.31
28Nov2012 - 20:59:00	93.27
28Nov2012 - 21:00:00	90.76
28Nov2012 - 21:01:00	122.41
28Nov2012 - 21:02:00	107.07
28Nov2012 - 21:03:00	131.18
28Nov2012 - 21:04:00	146.49
28Nov2012 - 21:05:00	181.08
28Nov2012 - 21:06:00	212.82
28Nov2012 - 21:07:00	529.36
28Nov2012 - 21:08:00	1001.8
28Nov2012 - 21:09:00	2564.32
28Nov2012 - 21:10:00	3486.98
28Nov2012 - 21:11:00	4240.84
28Nov2012 - 21:12:00	4833.29
28Nov2012 - 21:13:00	5057.52
28Nov2012 - 21:13:56	

Ellis Washer # 1 - Shop Towels With Strip
G&K Services
Methods 1-4 Summary

Run No.	W1 - ST-1	W1 - ST-2	W1 - ST-3	
Date:	28-Nov-12	28-Nov-12	28-Nov-12	
Start Time	8:50	11:30	14:58	
Stop Time	10:55	13:34	16:59	AVERAGES
Barometric Pressure, (inches of mercury)	29.88	29.88	29.88	29.88
Net Sampling Time, (minutes)	125	124	121	123.3
Wet Bulb Temp., (F)	33	39	39	37
Dry Bulb Temp., (F)	33	41	40	38
Calculated Saturation Constant	0.00632	0.00801	0.00802	0.0074
Moisture, (percent)	0.6	0.7	0.8	0.7
Dry Mole Fraction	0.9936	0.9927	0.9923	0.9929
CO_2 Concentration, (percent dry)	0.0	0.0	0.0	0.0
O_2 Concentration, (percent dry)	20.9	20.9	20.9	20.9
CO and N_2, (percent dry)	79.1	79.1	79.1	79.1
Dry Molecular Weight, (lb/lb mole)	28.84	28.84	28.84	28.84
Wet Molecular Weight, (lb/lb mole)	28.77	28.76	28.75	28.76
Excess Air at Stack, (percent)	-118750.0	-118750.0	-118750.0	-118750.0
Stack Area, (square inches)	28.3	28.3	28.3	28.3
Static Pressure, (inches of water)	-1.60	-1.30	-1.60	-1.50
Stack Pressure, (inches of mercury)	29.76	29.78	29.76	29.77
Average Stack Temperature, (°F)	33	41	40	38
Average Sqroot of ΔP	0.4933	0.4826	0.4972	0.4910
SDE Average	10.950	10.800	11.117	10.956
Pitot Coefficient	0.84	0.84	0.84	0.84
Stack Gas Velocity, (actual feet per minute - afpm)	1,613	1,590	1,638	1,614
Stack Flowrate, (actual cubic feet per minute - acfm)	317	312	322	317
Stack Flowrate, (standard cubic feet per minute - scfm)	338	328	338	335
Stack Flowrate, (dry standard cubic feet per minute - dscfm)	335	325	335	332

Method 2 Data Sheet

Washer 1

1

Plant	G+K	Date	11-28-2012
Location	Washer 1	Time	8:54

Stack Diameter	6	"	Area, A		ft^2
Barometric Pressure, P_b	29.88	"Hg	Meter Temp.		°F
% Moisture		$\%H_2O$	Stack O_2		%
Static Pressure, P_g	-1.6	$"H_2O$	Stack CO_2		%
Pitot Coefficient, C_p	.84		MW (wet)		lb/lb-mole

Port	Point	ΔP	$\sqrt{\Delta P}$	T_S (°F)	+ θ clockwise - θ counter-clockwise	$\sqrt{\Delta P}\cos\theta$	
A	1	.31		33			
	2	.28		32			
	3	.24		33			
	4	.24		33			
	5	.22		34			
	6	.21		33			
B	1	.22		33			
	2	.24		32			
	3	.22		33			
	4	.22		33			
	5	.25		32			
	6	.28		32			
		WB	33				
	Average						
		Average Absolute Temp.					

Absolute Gas Temperature, $T_{ST} = T_S + 460°$

Absolute Gas Pressure, $P_S = P_b + P_g/13.6$ _____ "Hg

Gas Velocity, $Vs = (85.49)\ Cp\ \sqrt{\Delta P}\ avg \sqrt{\frac{T_{ST}\ avg}{P_S\ M_W}}$ _____ ft/sec

Actual Gas Flowrate, $Qa = (V_s)\ (60)\ (A)$ _____ ACFM

Standard Gas Flowrate, $Q_{std} = \left[\frac{528°R}{T_{ST}}\right]\left[\frac{P_S}{29.92}\right]\left[\frac{100 - \%H_2O}{100}\right]Qa$ _____ DSCFM

Method 2 Data Sheet

~~Dry~~ Washer 1
2

Plant	G+K	Date	11-28-2012
Location	Washer 1	Time	11:33

Stack Diameter	6	"	Area, A		ft^2
Barometric Pressure, P_b	29.88	"Hg	Meter Temp.		°F
% Moisture		$\%H_2O$	Stack O_2		%
Static Pressure, P_g	-1.6	$"H_2O$	Stack CO_2		%
Pitot Coefficient, C_p	.84		MW (wet)		lb/lb-mole

Port	Point	ΔP	$\sqrt{\Delta P}$	T_S (°F)	+ θ clockwise - θ counter-clockwise	$\sqrt{\Delta P}\cos\theta$	
A	1	.28		41			
	2	.27		40			
	3	.25		40			
	4	.23		39			
	5	.21		44			
	6	.18		42			
B	1	.21		40			
	2	.20		39			
	3	.19		39			
	4	.24		41			
	5	.27		42			
	6	.28		43			
		wet bulb		39			
	Average						

Average Absolute Temp. _____

Absolute Gas Temperature, $T_{ST} = T_S + 460°$

Absolute Gas Pressure, $P_S = P_b + P_g/13.6$ _____ "Hg

Gas Velocity, $V_s = (85.49)\ C_p\ \sqrt{\Delta P}\ avg \sqrt{\frac{T_{ST}\ avg}{P_S\ M_W}}$ _____ ft/sec

Actual Gas Flowrate, $Q_a = (V_s)\ (60)\ (A)$ _____ ACFM

Standard Gas Flowrate, $Q_{std} = \left[\frac{528°R}{T_{ST}}\right]\left[\frac{P_S}{29.92}\right]\left[\frac{100 - \%H_2O}{100}\right]Q_a$ _____ DSCFM

Method 2 Data Sheet

Washer 1
3

Plant	G+K	Date	11-28-2012
Location	Washer 1	Time	15:04

Stack Diameter	6	"	Area, A		ft^2
Barometric Pressure, P_b	29.88	"Hg	Meter Temp.		°F
% Moisture		$\%H_2O$	Stack O_2		%
Static Pressure, P_g	-1.6	$"H_2O$	Stack CO_2		%
Pitot Coefficient, C_p	.84		MW (wet)		lb/lb-mole

Port	Point	ΔP	$\sqrt{\Delta P}$	T_S (°F)	+ θ clockwise - θ counter-clockwise	$\sqrt{\Delta P}\cos\theta$	
A	1	.30		39			
	2	.29		39			
	3	.26		39			
	4	.25		39			
	5	.26		39			
	6	.29		39			
B	1	.21		41			
	2	.21		40			
	3	.21		39			
	4	.20		41			
	5	.25		42			
	6	.25		42			
		wet bulb		39°			
	Average						

Average Absolute Temp. _____

Absolute Gas Temperature, $T_{ST} = T_S + 460°$

Absolute Gas Pressure, $P_S = P_b + P_g/13.6$ _____ "Hg

Gas Velocity, $V_s = (85.49)\ C_p \sqrt{\Delta P}\,avg \sqrt{\frac{T_{ST}\,avg}{P_S\ M_W}}$ _____ ft/sec

Actual Gas Flowrate, $Q_a = (V_s)\ (60)\ (A)$ _____ ACFM

Standard Gas Flowrate, $Q_{std} = \left[\frac{528°R}{T_{ST}}\right]\left[\frac{P_S}{29.92}\right]\left[\frac{100 - \%H_2O}{100}\right]Q_a$ _____ DSCFM

Washer #1

Shop towels w/ strip

EVACUATED CANISTER SAMPLING FORM

Client: G+K	Run Number:
Location: Washer #~~2~~1	Operator: S. Boyko / E. Coffman
Process:	Sample ID: T0-15-Washer1-1
Canister Number: 002760/SC01492	Flow Controller ID: FCS00057
Canister Leak Check Date: 11/28/12	Comments:

	Canister Vacuum		Barometric Pressure	Ambient Temperature
	Manometer (mmHg)	Gauge (inHg)	(mmHg)	~~(°C)~~ °F
Pre-test		30.00	29.88	36°
		9.76	29.88	33

Pretest Leak Rate	mmHg/10 minutes
	0.00
post	0.00

Elapsed Time	Clock Time	Gauge Vacuum (inHg)	8hr ~~Flow Meter Setting (ml/min)~~	Comments
0	8:50	30.1		
60	9:50	28.0		
131/0	11:01 / 11:30	25.0		
60	12:30	21.5		
124/0	13:34/14:58	17		
60	15:58	15.5		
E	16:59	12.5		

TRC

Print Towels

CEM CALIBRATION DATA
EPA Method 25A

Firm:	G&K	Analyzer:	California Analytical
Location:	Manchester, NH	Span Value (S):	8936
Operator	W Deveau	Analyzer Range:	30000
Sample Location:	washer 1		
Date:	29-Nov-12		

TOTAL HYDROCARBONS

PRE-TEST Calibration Error Check:

	Cylinder ID	Cylinder Gas Conc. (Ca)	Analyzer Response (C)	Slope (m)	Predicted Response (pr)	Calibration Error (<5%) (ce)
Zero, C_O		0.0	1.11			
C_{low} (25-35% span)	xc0033311b	2922.0	2922.9	1.0000	2922.0	0.0%
C_{mid} (45-55% span)	cc349917	4940.0	4940.8	1.0000	4940.0	0.0%
C_{high} (80-90% span)	cc351430	8936.0	8937.1	1.0000	8936.0	0.0%

Calibration Drift Check:

Run No:		1	2	3	4	AVG
Time						
Initial Zero	C_{OI}	1.1				
Initial Span	C_{MI}	2922.9				
Final Zero	C_{OF}	-24.7				
Final Span	C_{MF}	3016.3				
Calibration Drift (< 3%)	CD_O	0.3%		0.0%	0.0%	
Calibration Drift (< 3%)	CD_M	-1.0%				
THC Conc. (ppm, wet)	C_{THCavg}					

Nomenclature

C_{high}	Span gas analyzer response
C_O	Zero gas analyzer response
C_a	Cylinder gas value
C_{OI}	Initial calibration zero response
C_{OF}	Final calibration zero response
C_{MI}	Initial calibration upscale response
C_{MF}	Final calibration upscale response
CDo	Zero calibration drift
CDm	Upscale calibration drift
m	Slope
pr	Predicted response
ce	Calibration error
C	Analyzer response
S	Span
C_{NMHC}	Non-methane hydrocarbon concentration
C_{THC}	Total hydrocarbon concentration
C_{CH4}	Methane concentration

Calculations

$$m = (C_{high} - C_O) / C_a$$

$$pr = m \times C_a$$

$$ce = (C - pr) / C_a \times 100$$

$$CD_O = (C_{OI} - C_{OF}) / S$$

$$C_{NMHC} = C_{THC} - C_{CH4}$$

$$ER = C_{avg} \quad MW \quad 2.5962e\text{-}9 \quad Q \quad 60$$

where,

MW = molecular weight of methane, 16.04
2.5962e-9 = conversion from ppm to pounds per standard cubic feet.
60 = conversion from minutes to hour
Q = flow in units of standard cubic feet per minute

h:\stack\connecticut\projects\2012\g&k - manchester, nh\compliance testing\field data\nov 29 - print towels\[g&k - washer no. 1 emissions - print towels - 11-29-2012.xls]calibrations 12/13/112 13:04

Cylinder Gas	THC (ppm) Washer1
Zero ID	
Zero Expiration	
Low ID	XC03311B
Low Expiration	42000
Low Concentration	2922
Mid ID	CC349917
Mid Expiration	7/7/2014
Mid Concentration	4940
High ID	CC351430
High Expiration	10/21/2014
High Concentration	8936

Calibration Error	THC (ppm) Washer1
Zero Response	1.11
Zero Error (%)	0.01
Low Response	2922.91
Low Error (%)	0.03
Mid Response	4940.81
Mid Error (%)	0.02
High Response	8937.11
High Error (%)	0.01

Initial Bias	THC (ppm) Washer1
Zero Response	0
Zero Bias (%)	0
Span Concentration	2922
Span Response	0
Span Bias (%)	0

Print Towels

Log Averages	THC (ppm) Washer1
29Nov2012 - 07:16:00	130.48
29Nov2012 - 07:17:00	151.54
29Nov2012 - 07:18:00	132.68
29Nov2012 - 07:19:00	135.24
29Nov2012 - 07:20:00	129.81
29Nov2012 - 07:21:00	116.67
29Nov2012 - 07:22:00	159.66
29Nov2012 - 07:23:00	154.1
29Nov2012 - 07:24:00	131.36
29Nov2012 - 07:25:00	116.59
29Nov2012 - 07:26:00	114.1
29Nov2012 - 07:27:00	121.1
29Nov2012 - 07:28:00	133.55
29Nov2012 - 07:29:00	120.58
29Nov2012 - 07:30:00	127.12
29Nov2012 - 07:31:00	114.26
29Nov2012 - 07:32:00	137.13
29Nov2012 - 07:33:00	93.76
29Nov2012 - 07:34:00	107.69
29Nov2012 - 07:35:00	132.19
29Nov2012 - 07:36:00	113.66
29Nov2012 - 07:37:00	121.92
29Nov2012 - 07:38:00	126.44
29Nov2012 - 07:39:00	119.78
29Nov2012 - 07:40:00	124.14
29Nov2012 - 07:41:00	132.93
29Nov2012 - 07:42:00	125.66
29Nov2012 - 07:43:00	115.62
29Nov2012 - 07:44:00	147.39
29Nov2012 - 07:45:00	123.33
29Nov2012 - 07:46:00	116.11
29Nov2012 - 07:47:00	82.41
29Nov2012 - 07:48:00	138.88
29Nov2012 - 07:49:00	126.19
29Nov2012 - 07:50:00	111.56
29Nov2012 - 07:51:00	112.54
29Nov2012 - 07:52:00	126.54
29Nov2012 - 07:53:00	123.24
29Nov2012 - 07:54:00	134.04
29Nov2012 - 07:55:00	131.87
29Nov2012 - 07:56:00	116.23
29Nov2012 - 07:57:00	131.18
29Nov2012 - 07:58:00	124.78
29Nov2012 - 07:59:00	134.77
29Nov2012 - 08:00:00	120.01
29Nov2012 - 08:01:00	158.93
29Nov2012 - 08:02:00	115.76

Washer 1 Exhaust Summaries

Time	Ave THC Conc	MW	(SCFM)	lb/hr
0803 - 1115	322.3	12	347	0.21
1135 - 1503	381.6	12	339	0.24
Daily Average	353.1	12	343	0.23

START WASH LOAD 1 (WASHER 1)

29Nov2012 - 08:03:00	143.15
29Nov2012 - 08:04:00	461.19
29Nov2012 - 08:05:00	772.12
29Nov2012 - 08:06:00	726.37
29Nov2012 - 08:07:00	354.1
29Nov2012 - 08:08:00	1204.65
29Nov2012 - 08:09:00	1020.92
29Nov2012 - 08:10:00	1080.33

29Nov2012 - 08:11:00	1077.83
29Nov2012 - 08:12:00	1209.4
29Nov2012 - 08:13:00	1235.38
29Nov2012 - 08:14:00	1926.9
29Nov2012 - 08:15:00	2589.9
29Nov2012 - 08:16:00	2473.24
29Nov2012 - 08:17:00	2982.61
29Nov2012 - 08:18:00	3992.64
29Nov2012 - 08:19:00	4621.55
29Nov2012 - 08:20:00	2587.04
29Nov2012 - 08:21:00	650.36
29Nov2012 - 08:22:00	519.5
29Nov2012 - 08:23:00	346.23
29Nov2012 - 08:24:00	338.15
29Nov2012 - 08:25:00	263.29
29Nov2012 - 08:26:00	255.56
29Nov2012 - 08:27:00	308.28
29Nov2012 - 08:28:00	255.22
29Nov2012 - 08:29:00	249.13
29Nov2012 - 08:30:00	270.31
29Nov2012 - 08:31:00	234.85
29Nov2012 - 08:32:00	251.95
29Nov2012 - 08:33:00	205.34
29Nov2012 - 08:34:00	236.67
29Nov2012 - 08:35:00	269.38
29Nov2012 - 08:36:00	238.54
29Nov2012 - 08:37:00	245.9
29Nov2012 - 08:38:00	216.25
29Nov2012 - 08:39:00	251.2
29Nov2012 - 08:40:00	207.01
29Nov2012 - 08:41:00	242.25
29Nov2012 - 08:42:00	167.28
29Nov2012 - 08:43:00	228.99
29Nov2012 - 08:44:00	213.63
29Nov2012 - 08:45:00	204.33
29Nov2012 - 08:46:00	202.48
29Nov2012 - 08:47:00	199.25
29Nov2012 - 08:48:00	200.77
29Nov2012 - 08:49:00	176.76
29Nov2012 - 08:50:00	196.49
29Nov2012 - 08:51:00	171.09
29Nov2012 - 08:52:00	185.27
29Nov2012 - 08:53:00	167.6
29Nov2012 - 08:54:00	169.63
29Nov2012 - 08:55:00	151.2
29Nov2012 - 08:56:00	160.89
29Nov2012 - 08:57:00	150.81
29Nov2012 - 08:58:00	154.41
29Nov2012 - 08:59:00	142.67
29Nov2012 - 09:00:00	173.79
29Nov2012 - 09:01:00	150.14
29Nov2012 - 09:02:00	151.38
29Nov2012 - 09:03:00	155.67
29Nov2012 - 09:04:00	116
29Nov2012 - 09:05:00	152.7
29Nov2012 - 09:06:00	142.18
29Nov2012 - 09:07:00	148.25
29Nov2012 - 09:08:00	146.19
29Nov2012 - 09:09:00	125.96
29Nov2012 - 09:10:00	109.77
29Nov2012 - 09:11:00	125.92

29Nov2012 - 09:12:00	93.27
29Nov2012 - 09:13:00	124.95
29Nov2012 - 09:14:00	119.39
29Nov2012 - 09:15:00	132.37
29Nov2012 - 09:16:00	121.69
29Nov2012 - 09:17:00	130.53
29Nov2012 - 09:18:00	152.14
29Nov2012 - 09:19:00	133.25
29Nov2012 - 09:20:00	122.45
29Nov2012 - 09:21:00	124.93
29Nov2012 - 09:22:00	120.5
29Nov2012 - 09:23:00	124.51
29Nov2012 - 09:24:00	133.43
29Nov2012 - 09:25:00	106.82
29Nov2012 - 09:26:00	121.21
29Nov2012 - 09:27:00	84.37
29Nov2012 - 09:28:00	117.91
29Nov2012 - 09:29:00	105.75
29Nov2012 - 09:30:00	120.49
29Nov2012 - 09:31:00	117.54
29Nov2012 - 09:32:00	113.51
29Nov2012 - 09:33:00	93.52
29Nov2012 - 09:34:00	103.63
29Nov2012 - 09:35:00	129.79
29Nov2012 - 09:36:00	142
29Nov2012 - 09:37:00	145.2
29Nov2012 - 09:38:00	136.28
29Nov2012 - 09:39:00	146.42
29Nov2012 - 09:40:00	176.55
29Nov2012 - 09:41:00	170.53
29Nov2012 - 09:42:00	141.88
29Nov2012 - 09:43:00	141.23
29Nov2012 - 09:44:00	130.65
29Nov2012 - 09:45:00	145.27
29Nov2012 - 09:46:00	146.42
29Nov2012 - 09:47:00	177.08
29Nov2012 - 09:48:00	135.07
29Nov2012 - 09:49:00	130.55
29Nov2012 - 09:50:00	108.59
29Nov2012 - 09:51:00	117.7
29Nov2012 - 09:52:00	138.79
29Nov2012 - 09:53:00	194.59
29Nov2012 - 09:54:00	144.23
29Nov2012 - 09:55:00	105.61
29Nov2012 - 09:56:00	109.3
29Nov2012 - 09:57:00	75.48
29Nov2012 - 09:58:00	87.51
29Nov2012 - 09:59:00	87.87
29Nov2012 - 10:00:00	76.59
29Nov2012 - 10:01:00	117.84
29Nov2012 - 10:02:00	106.19
29Nov2012 - 10:03:00	89.7
29Nov2012 - 10:04:00	90.96
29Nov2012 - 10:05:00	82.34
29Nov2012 - 10:06:00	97.65
29Nov2012 - 10:07:00	71.36
29Nov2012 - 10:08:00	108.43
29Nov2012 - 10:09:00	84.8
29Nov2012 - 10:10:00	87.81
29Nov2012 - 10:11:00	87.41
29Nov2012 - 10:12:00	68.4

29Nov2012 - 10:13:00	86.86
29Nov2012 - 10:14:00	64
29Nov2012 - 10:15:00	84.92
29Nov2012 - 10:16:00	246.11
29Nov2012 - 10:17:00	154.66
29Nov2012 - 10:18:00	107.64
29Nov2012 - 10:19:00	105.66
29Nov2012 - 10:20:00	121.16
29Nov2012 - 10:21:00	116.25
29Nov2012 - 10:22:00	37.61
29Nov2012 - 10:23:00	76.96
29Nov2012 - 10:24:00	132.33
29Nov2012 - 10:25:00	111.77
29Nov2012 - 10:26:00	80.67
29Nov2012 - 10:27:00	136.99
29Nov2012 - 10:28:00	513.32
29Nov2012 - 10:29:00	295.84
29Nov2012 - 10:30:00	53.36
29Nov2012 - 10:31:00	330.54
29Nov2012 - 10:32:00	283.73
29Nov2012 - 10:33:00	72.3
29Nov2012 - 10:34:00	49.33
29Nov2012 - 10:35:00	120.42
29Nov2012 - 10:36:00	117.84
29Nov2012 - 10:37:00	1486.88
29Nov2012 - 10:38:00	1018.2
29Nov2012 - 10:39:00	360.18
29Nov2012 - 10:40:00	318.43
29Nov2012 - 10:41:00	320.55
29Nov2012 - 10:42:00	323.92
29Nov2012 - 10:43:00	325.81
29Nov2012 - 10:44:00	243.46
29Nov2012 - 10:45:00	108.91
29Nov2012 - 10:46:00	167.95
29Nov2012 - 10:47:00	83.81
29Nov2012 - 10:48:00	95.46
29Nov2012 - 10:49:00	115.65
29Nov2012 - 10:50:00	97.95
29Nov2012 - 10:51:00	216.79
29Nov2012 - 10:52:00	148.69
29Nov2012 - 10:53:00	70.45
29Nov2012 - 10:54:00	599.3
29Nov2012 - 10:55:00	706.37
29Nov2012 - 10:56:00	166.26
29Nov2012 - 10:57:00	74.75
29Nov2012 - 10:58:00	117.4
29Nov2012 - 10:59:00	360.97
29Nov2012 - 11:00:00	219.86
29Nov2012 - 11:01:00	240.5
29Nov2012 - 11:02:00	271
29Nov2012 - 11:03:00	292.18
29Nov2012 - 11:04:00	350.57
29Nov2012 - 11:05:00	67.07
29Nov2012 - 11:06:00	28.89
29Nov2012 - 11:07:00	57.97
29Nov2012 - 11:08:00	36.22
29Nov2012 - 11:09:00	47.09
29Nov2012 - 11:10:00	71.08
29Nov2012 - 11:11:00	39.54
29Nov2012 - 11:12:00	234.83
29Nov2012 - 11:13:00	313.29

29Nov2012 - 11:14:00	103.35
29Nov2012 - 11:15:00	86.38

END WASH LOAD 1

AVERAGES	**322.3**

29Nov2012 - 11:16:00	85.8
29Nov2012 - 11:17:00	103.98
29Nov2012 - 11:18:00	121.3
29Nov2012 - 11:19:00	240.04
29Nov2012 - 11:20:00	288.81
29Nov2012 - 11:21:00	343.23
29Nov2012 - 11:22:00	418.92
29Nov2012 - 11:23:00	404.8
29Nov2012 - 11:24:00	447.8
29Nov2012 - 11:25:00	444.48
29Nov2012 - 11:26:00	476.14
29Nov2012 - 11:27:00	504.6
29Nov2012 - 11:28:00	424.34
29Nov2012 - 11:29:00	514.29
29Nov2012 - 11:30:00	569.29
29Nov2012 - 11:31:00	438.44
29Nov2012 - 11:32:00	443.44
29Nov2012 - 11:33:00	522.07
29Nov2012 - 11:34:00	455.6

START WASH LOAD 3 (WASHER 1)

29Nov2012 - 11:35:00	460.31
29Nov2012 - 11:36:00	693.19
29Nov2012 - 11:37:00	2596.89
29Nov2012 - 11:38:00	1989.01
29Nov2012 - 11:39:00	833.57
29Nov2012 - 11:40:00	798.88
29Nov2012 - 11:41:00	999.35
29Nov2012 - 11:42:00	1168.38
29Nov2012 - 11:43:00	1316.39
29Nov2012 - 11:44:00	1524.74
29Nov2012 - 11:45:00	1772.76
29Nov2012 - 11:46:00	1973.96
29Nov2012 - 11:47:00	2843.16
29Nov2012 - 11:48:00	3118.83
29Nov2012 - 11:49:00	4253.2
29Nov2012 - 11:50:00	5389.22
29Nov2012 - 11:51:00	4947.62
29Nov2012 - 11:52:00	887.86
29Nov2012 - 11:53:00	581.52
29Nov2012 - 11:54:00	414.03
29Nov2012 - 11:55:00	358
29Nov2012 - 11:56:00	347.52
29Nov2012 - 11:57:00	291.97
29Nov2012 - 11:58:00	315.11
29Nov2012 - 11:59:00	265.03
29Nov2012 - 12:00:00	312.57
29Nov2012 - 12:01:00	256.14
29Nov2012 - 12:02:00	268.33
29Nov2012 - 12:03:00	315.46
29Nov2012 - 12:04:00	279.7
29Nov2012 - 12:05:00	325.31
29Nov2012 - 12:06:00	290.12
29Nov2012 - 12:07:00	273.26

29Nov2012 - 12:08:00	274.9
29Nov2012 - 12:09:00	289.2
29Nov2012 - 12:10:00	254.76
29Nov2012 - 12:11:00	259.83
29Nov2012 - 12:12:00	255.17
29Nov2012 - 12:13:00	282.23
29Nov2012 - 12:14:00	213.86
29Nov2012 - 12:15:00	216.72
29Nov2012 - 12:16:00	238.79
29Nov2012 - 12:17:00	240.11
29Nov2012 - 12:18:00	232.13
29Nov2012 - 12:19:00	230.46
29Nov2012 - 12:20:00	194.55
29Nov2012 - 12:21:00	212.49
29Nov2012 - 12:22:00	213.51
29Nov2012 - 12:23:00	204.81
29Nov2012 - 12:24:00	202.76
29Nov2012 - 12:25:00	190.28
29Nov2012 - 12:26:00	175.84
29Nov2012 - 12:27:00	178.05
29Nov2012 - 12:28:00	209.47
29Nov2012 - 12:29:00	191.6
29Nov2012 - 12:30:00	190.86
29Nov2012 - 12:31:00	158.98
29Nov2012 - 12:32:00	186.8
29Nov2012 - 12:33:00	193.79
29Nov2012 - 12:34:00	218.29
29Nov2012 - 12:35:00	196.07
29Nov2012 - 12:36:00	224.14
29Nov2012 - 12:37:00	140.66
29Nov2012 - 12:38:00	170.16
29Nov2012 - 12:39:00	173.07
29Nov2012 - 12:40:00	200.82
29Nov2012 - 12:41:00	191.32
29Nov2012 - 12:42:00	169.49
29Nov2012 - 12:43:00	164.86
29Nov2012 - 12:44:00	203.15
29Nov2012 - 12:45:00	156
29Nov2012 - 12:46:00	143.36
29Nov2012 - 12:47:00	177.61
29Nov2012 - 12:48:00	183.26
29Nov2012 - 12:49:00	195.31
29Nov2012 - 12:50:00	169.03
29Nov2012 - 12:51:00	206.38
29Nov2012 - 12:52:00	223.52
29Nov2012 - 12:53:00	123.29
29Nov2012 - 12:54:00	181.28
29Nov2012 - 12:55:00	188.16
29Nov2012 - 12:56:00	207.17
29Nov2012 - 12:57:00	213.35
29Nov2012 - 12:58:00	182.23
29Nov2012 - 12:59:00	194.82
29Nov2012 - 13:00:00	193.74
29Nov2012 - 13:01:00	191.46
29Nov2012 - 13:02:00	188.92
29Nov2012 - 13:03:00	199.18
29Nov2012 - 13:04:00	190.28
29Nov2012 - 13:05:00	196.19
29Nov2012 - 13:06:00	208.06
29Nov2012 - 13:07:00	165.52
29Nov2012 - 13:08:00	184.6

29Nov2012 - 13:09:00	175.38
29Nov2012 - 13:10:00	161.17
29Nov2012 - 13:11:00	200.61
29Nov2012 - 13:12:00	203.24
29Nov2012 - 13:13:00	139.66
29Nov2012 - 13:14:00	300.39
29Nov2012 - 13:15:00	96.98
29Nov2012 - 13:16:00	104.95
29Nov2012 - 13:17:00	107.27
29Nov2012 - 13:18:00	118.09
29Nov2012 - 13:19:00	108.91
29Nov2012 - 13:20:00	104.18
29Nov2012 - 13:21:00	105.2
29Nov2012 - 13:22:00	95.56
29Nov2012 - 13:23:00	136.28
29Nov2012 - 13:24:00	98.88
29Nov2012 - 13:25:00	117.47
29Nov2012 - 13:26:00	106.21
29Nov2012 - 13:27:00	107.88
29Nov2012 - 13:28:00	135.81
29Nov2012 - 13:29:00	91.13
29Nov2012 - 13:30:00	80.35
29Nov2012 - 13:31:00	101.79
29Nov2012 - 13:32:00	100.58
29Nov2012 - 13:33:00	109.54
29Nov2012 - 13:34:00	118.44
29Nov2012 - 13:35:00	113.71
29Nov2012 - 13:36:00	111.84
29Nov2012 - 13:37:00	109.37
29Nov2012 - 13:38:00	136.6
29Nov2012 - 13:39:00	122.71
29Nov2012 - 13:40:00	92.76
29Nov2012 - 13:41:00	94.86
29Nov2012 - 13:42:00	124.23
29Nov2012 - 13:43:00	108.78
29Nov2012 - 13:44:00	100.65
29Nov2012 - 13:45:00	102.98
29Nov2012 - 13:46:00	112.17
29Nov2012 - 13:47:00	100.98
29Nov2012 - 13:48:00	98.76
29Nov2012 - 13:49:00	100.79
29Nov2012 - 13:50:00	104.62
29Nov2012 - 13:51:00	114.08
29Nov2012 - 13:52:00	105.84
29Nov2012 - 13:53:00	112.58
29Nov2012 - 13:54:00	102.48
29Nov2012 - 13:55:00	104.16
29Nov2012 - 13:56:00	96.85
29Nov2012 - 13:57:00	104.3
29Nov2012 - 13:58:00	97.24
29Nov2012 - 13:59:00	106.12
29Nov2012 - 14:00:00	108.91
29Nov2012 - 14:01:00	99.75
29Nov2012 - 14:02:00	98.49
29Nov2012 - 14:03:00	130.64
29Nov2012 - 14:04:00	114.91
29Nov2012 - 14:05:00	97.19
29Nov2012 - 14:06:00	127.26
29Nov2012 - 14:07:00	283.16
29Nov2012 - 14:08:00	140.27
29Nov2012 - 14:09:00	133.5

29Nov2012 - 14:10:00	135.86
29Nov2012 - 14:11:00	112.03
29Nov2012 - 14:12:00	107.11
29Nov2012 - 14:13:00	222.86
29Nov2012 - 14:14:00	127.57
29Nov2012 - 14:15:00	238.68
29Nov2012 - 14:16:00	138.77
29Nov2012 - 14:17:00	75.07
29Nov2012 - 14:18:00	346.28
29Nov2012 - 14:19:00	461.11
29Nov2012 - 14:20:00	127.95
29Nov2012 - 14:21:00	107.65
29Nov2012 - 14:22:00	504.92
29Nov2012 - 14:23:00	256.7
29Nov2012 - 14:24:00	98.48
29Nov2012 - 14:25:00	31.05
29Nov2012 - 14:26:00	107.76
29Nov2012 - 14:27:00	1669.42
29Nov2012 - 14:28:00	1609.03
29Nov2012 - 14:29:00	484.49
29Nov2012 - 14:30:00	428.42
29Nov2012 - 14:31:00	427.76
29Nov2012 - 14:32:00	403.26
29Nov2012 - 14:33:00	385.29
29Nov2012 - 14:34:00	296.37
29Nov2012 - 14:35:00	137.1
29Nov2012 - 14:36:00	225.64
29Nov2012 - 14:37:00	180.31
29Nov2012 - 14:38:00	109.24
29Nov2012 - 14:39:00	65.04
29Nov2012 - 14:40:00	190.9
29Nov2012 - 14:41:00	409.63
29Nov2012 - 14:42:00	185.46
29Nov2012 - 14:43:00	105.43
29Nov2012 - 14:44:00	1154.31
29Nov2012 - 14:45:00	715.59
29Nov2012 - 14:46:00	161
29Nov2012 - 14:47:00	68.27
29Nov2012 - 14:48:00	448.94
29Nov2012 - 14:49:00	824.46
29Nov2012 - 14:50:00	522.57
29Nov2012 - 14:51:00	731.07
29Nov2012 - 14:52:00	579.02
29Nov2012 - 14:53:00	401.18
29Nov2012 - 14:54:00	475.79
29Nov2012 - 14:55:00	80.28
29Nov2012 - 14:56:00	61.69
29Nov2012 - 14:57:00	51.21
29Nov2012 - 14:58:00	49.74
29Nov2012 - 14:59:00	39.15
29Nov2012 - 15:00:00	42.82
29Nov2012 - 15:01:00	79.06
29Nov2012 - 15:02:00	440.72
29Nov2012 - 15:03:00	304.45

END WASH LOAD 3 (WASHER 1)

AVERAGES	**381.6**
DAILY AVERAGE	**353.1**

29Nov2012 - 15:04:00	127.02	
29Nov2012 - 15:05:00	109.83	
29Nov2012 - 15:06:00	149.21	
29Nov2012 - 15:07:00	275.36	
29Nov2012 - 15:08:00	464.04	
29Nov2012 - 15:09:00	520.01	
29Nov2012 - 15:10:00	2353.18	
29Nov2012 - 15:11:00	2889.76	
29Nov2012 - 15:12:00	2938.11	
29Nov2012 - 15:13:00	3016.27	SPAN
29Nov2012 - 15:14:00	449.61	
29Nov2012 - 15:15:00	2.62	
29Nov2012 - 15:16:00	-26.38	
29Nov2012 - 15:17:00	-24.7	ZERO
29Nov2012 - 15:18:00	0.91	
29Nov2012 - 15:19:00	374.88	
29Nov2012 - 15:20:00	450.44	
29Nov2012 - 15:21:00	365.27	
29Nov2012 - 15:22:00	191.11	
29Nov2012 - 15:23:00	208.06	
29Nov2012 - 15:24:00	191.97	
29Nov2012 - 15:25:00	188.08	
29Nov2012 - 15:26:00	179.38	
29Nov2012 - 15:27:00	206.4	
29Nov2012 - 15:28:00	199.16	
29Nov2012 - 15:29:00	190.76	
29Nov2012 - 15:30:00	185.43	
29Nov2012 - 15:31:00	167.09	
29Nov2012 - 15:32:00	157.51	
29Nov2012 - 15:33:00	146.68	
29Nov2012 - 15:34:00	138.76	
29Nov2012 - 15:35:00	127.8	
29Nov2012 - 15:36:00	122.38	
29Nov2012 - 15:37:00	120.52	
29Nov2012 - 15:38:00	116.82	
29Nov2012 - 15:39:00	115.23	
29Nov2012 - 15:40:00	109.07	
29Nov2012 - 15:41:00	109.14	
29Nov2012 - 15:42:00	108.43	
29Nov2012 - 15:43:00	104.98	
29Nov2012 - 15:44:00	107.71	
29Nov2012 - 15:45:00	101.51	
29Nov2012 - 15:46:00	96.03	
29Nov2012 - 15:47:00	67.63	
29Nov2012 - 15:48:00	84.25	
29Nov2012 - 15:49:00	104.07	
29Nov2012 - 15:50:00	105.39	
29Nov2012 - 15:51:00	97.51	
29Nov2012 - 15:52:00	99.54	
29Nov2012 - 15:53:00	100.09	
29Nov2012 - 15:54:00	98.95	
29Nov2012 - 15:55:00	100.16	
29Nov2012 - 15:56:00	104.65	
29Nov2012 - 15:57:00	108.49	
29Nov2012 - 15:58:00	125.08	
29Nov2012 - 15:59:00	139.45	
29Nov2012 - 16:00:00	145.56	
29Nov2012 - 16:01:00	166.14	
29Nov2012 - 16:02:00	178.44	
29Nov2012 - 16:03:00	245.87	
29Nov2012 - 16:04:00	275.41	

29Nov2012 - 16:05:00	240.71
29Nov2012 - 16:06:00	196.93
29Nov2012 - 16:07:00	182.69
29Nov2012 - 16:08:00	173.31
29Nov2012 - 16:09:00	152.93
29Nov2012 - 16:10:00	135.27
29Nov2012 - 16:11:00	126.63
29Nov2012 - 16:12:00	117.34
29Nov2012 - 16:13:00	115.53
29Nov2012 - 16:14:00	109.53
29Nov2012 - 16:15:00	110.53
29Nov2012 - 16:16:00	107.28
29Nov2012 - 16:17:00	103.29
29Nov2012 - 16:18:00	102.35
29Nov2012 - 16:19:00	98.65
29Nov2012 - 16:20:00	99.15
29Nov2012 - 16:21:00	97.08
29Nov2012 - 16:22:00	96.41
29Nov2012 - 16:23:00	90.3
29Nov2012 - 16:24:00	87.1
29Nov2012 - 16:25:00	88.02
29Nov2012 - 16:26:00	99.22
29Nov2012 - 16:27:00	140.96
29Nov2012 - 16:28:00	113.84
29Nov2012 - 16:29:00	106.51
29Nov2012 - 16:30:00	99.09
29Nov2012 - 16:31:00	94.23
29Nov2012 - 16:32:00	92.44
29Nov2012 - 16:33:00	86.02
29Nov2012 - 16:34:00	81.14
29Nov2012 - 16:35:00	81.58
29Nov2012 - 16:36:00	81.89
29Nov2012 - 16:37:00	77.67
29Nov2012 - 16:38:00	74.76
29Nov2012 - 16:39:00	72.35
29Nov2012 - 16:40:00	71.17
29Nov2012 - 16:41:00	68.28
29Nov2012 - 16:42:00	64.6
29Nov2012 - 16:43:00	66.35
29Nov2012 - 16:44:00	61.97
29Nov2012 - 16:45:00	57.88
29Nov2012 - 16:46:00	57.16
29Nov2012 - 16:47:00	56.79
29Nov2012 - 16:48:00	55.99
29Nov2012 - 16:49:00	54.58
29Nov2012 - 16:50:00	52.44
29Nov2012 - 16:51:00	52.32
29Nov2012 - 16:52:00	53.03
29Nov2012 - 16:53:00	51.09
29Nov2012 - 16:54:00	50.16
29Nov2012 - 16:55:00	49.13
29Nov2012 - 16:56:00	48.44
29Nov2012 - 16:57:00	46.57
29Nov2012 - 16:58:00	47.76
29Nov2012 - 16:59:00	47.28
29Nov2012 - 17:00:00	45.46
29Nov2012 - 17:01:00	45.33
29Nov2012 - 17:02:00	45.4
29Nov2012 - 17:03:00	46.12
29Nov2012 - 17:04:00	45.83
29Nov2012 - 17:05:00	46.96

29Nov2012 - 17:06:00	44.95
29Nov2012 - 17:07:00	43.26
29Nov2012 - 17:08:00	44.37
29Nov2012 - 17:09:00	43.44
29Nov2012 - 17:10:00	43.08
29Nov2012 - 17:11:00	45.06
29Nov2012 - 17:12:00	44.39
29Nov2012 - 17:13:00	30.01
29Nov2012 - 17:14:00	1.24
29Nov2012 - 17:15:00	-0.53
29Nov2012 - 17:16:00	0.19
29Nov2012 - 17:17:00	-0.9
29Nov2012 - 17:18:00	-0.11
29Nov2012 - 17:19:00	-0.14
29Nov2012 - 17:20:00	-0.42
29Nov2012 - 17:21:00	1.2
29Nov2012 - 17:22:00	0.26
29Nov2012 - 17:23:00	-0.49
29Nov2012 - 17:24:00	1.36
29Nov2012 - 17:25:00	-0.17
29Nov2012 - 17:26:00	1.21
29Nov2012 - 17:27:00	-9.66
29Nov2012 - 17:28:00	-22.44
29Nov2012 - 17:29:00	-22.28
29Nov2012 - 17:30:00	-21.64
29Nov2012 - 17:31:00	-22.06
29Nov2012 - 17:32:00	-22.24
29Nov2012 - 17:33:00	-22.14
29Nov2012 - 17:34:00	-21.96
29Nov2012 - 17:35:00	-21.45
29Nov2012 - 17:36:00	-21.53
29Nov2012 - 17:37:00	-21.2
29Nov2012 - 17:38:00	-20.98
29Nov2012 - 17:39:00	-20.59
29Nov2012 - 17:40:00	-20.78
29Nov2012 - 17:41:00	-21.05
29Nov2012 - 17:42:00	-21.43
29Nov2012 - 17:43:00	-21.41
29Nov2012 - 17:43:49	-21.68

Ellis Washer # 1 - Print Towels With Strip
G&K Services
Methods 1-4 Summary

Run No.	**W1 - PT-1**	**W1 - PT-2**	
Date:	**29-Nov-12**	**29-Nov-12**	
Start Time	**8:03**	**11:35**	
Stop Time	**11:15**	**15:03**	**AVERAGES**
Barometric Pressure, (inches of mercury)	29.96	29.96	29.96
Net Sampling Time, (minutes)	192.0	218.0	205.0
Wet Bulb Temp., (F)	35	48	42
Dry Bulb Temp., (F)	36	56	46
Calculated Saturation Constant	0.00677	0.01125	0.0090
Moisture, (percent)	0.6	0.8	0.7
Dry Mole Fraction	0.9935	0.9916	0.9925
CO_2 Concentration, (percent dry)	0.0	0.0	0.0
O_2 Concentration, (percent dry)	20.9	20.9	20.9
CO and N_2, (percent dry)	79.1	79.1	79.1
Dry Molecular Weight, (lb/lb mole)	28.84	28.84	28.84
Wet Molecular Weight, (lb/lb mole)	28.77	28.74	28.76
Excess Air at Stack, (percent)	-118750.0	-118750.0	-118750.0
Stack Area, (square inches)	28.3	28.3	28.3
Static Pressure, (inches of water)	1.60		1.60
Stack Pressure, (inches of mercury)	30.08	29.96	30.02
Average Stack Temperature, (°F)	36	56	46
Average Sqroot of ΔP	0.5058	0.5044	0.5051
SDE Average	11.263	11.453	11.358
Pitot Coefficient	0.84	0.84	0.84
Stack Gas Velocity, (actual feet per minute - afpm)	1,650	1,682	1,666
Stack Flowrate, (actual cubic feet per minute - acfm)	324	330	327
Stack Flowrate, (standard cubic feet per minute - scfm)	347	339	343
Stack Flowrate, (dry standard cubic feet per minute - dscfm)	345	336	341

Method 2 Data Sheet

Print Towels

Washer 1

Plant	G+K	Date	11-29-2017
Location	Washer 1	Time	8:08

Stack Diameter	6	"	Area, A		ft^2
Barometric Pressure, P_b	29.96	"Hg	Meter Temp.		°F
% Moisture		$\%H_2O$	Stack O_2		%
Static Pressure, P_g	-1.6	$"H_2O$	Stack CO_2		%
Pitot Coefficient, C_p	.84		MW (wet)		lb/lb-mole

Port	Point	ΔP	$\sqrt{\Delta P}$	T_S (°F)	+ θ clockwise - θ counter-clockwise	$\sqrt{\Delta P}\cos\theta$	
A	1	.30		33			
	2	.29		33			
	3	.27		33			
	4	.26		34			
	5	.25		34			
	6	.25		34			
B	1	.23		35			
	2	.22		37			
	3	.21		37			
	4	.24		38			
	5	.26		40			
	6	.30		42			
	Average						

wet bulb 55

Average Absolute Temp.

Absolute Gas Temperature, $T_{ST} = T_S + 460°$

Absolute Gas Pressure, $P_S = P_b + P_g/13.6$ "Hg

Gas Velocity, $V_s = (85.49)\ C_p\ \sqrt{\Delta P}\,avg \sqrt{\frac{T_{ST}\,avg}{P_S\ M_W}}$ ft/sec

Actual Gas Flowrate, $Q_a = (V_s)\ (60)\ (A)$ ACFM

Standard Gas Flowrate, $Q_{std} = \left[\frac{528°R}{T_{ST}}\right]\left[\frac{P_S}{29.92}\right]\left[\frac{100 - \%H_2O}{100}\right]Q_a$ DSCFM

Method 2 Data Sheet

Print Washer 1 2

Plant	GTK	Date	11-29-2012
Location	Washer 1	Time	11:49

Stack Diameter	6	"	Area, A		ft^2
Barometric Pressure, P_b	29.96	"Hg	Meter Temp.		°F
% Moisture		$\%H_2O$	Stack O_2		%
Static Pressure, P_g	-1.6	$"H_2O$	Stack CO_2		%
Pitot Coefficient, C_p	.84		MW (wet)		lb/lb-mole

Port	Point	ΔP	$\sqrt{\Delta P}$	T_S (°F)	+ θ clockwise - θ counter-clockwise	$\sqrt{\Delta P}\cos\theta$	
A	1	.30		60			
	2	.30		61			
	3	.28		61			
	4	.25		62			
	5	.26		61			
	6	.26		63			
B	1	.22		57			
	2	.23		51			
	3	.24		48			
	4	.24		47			
	5	.24		47			
	6	.24		49			
		wet bulb		48°			
	Average						

Average Absolute Temp. _____

Absolute Gas Temperature, $T_{ST} = T_S + 460°$

Absolute Gas Pressure, $P_S = P_b + P_g/13.6$ _____ "Hg

Gas Velocity, $V_s = (85.49)\ C_p\ \sqrt{\Delta P}\,avg\ \sqrt{\frac{T_{ST}\,avg}{P_S\ M_W}}$ _____ ft/sec

Actual Gas Flowrate, $Q_a = (V_s)\ (60)\ (A)$ _____ ACFM

Standard Gas Flowrate, $Q_{std} = \left[\frac{528°R}{T_{ST}}\right]\left[\frac{P_S}{29.92}\right]\left[\frac{100 - \%H_2O}{100}\right]Q_a$ _____ DSCFM

Washer 1 PrintTowels

EVACUATED CANISTER SAMPLING FORM

Client: G+K	Run Number: TO-15-Washer 1-2
Location: Washer 1	Operator: SB/EG
Process:	Sample ID:
Canister Number: 004310/SC01598	Flow Controller ID: FCS 00057
Canister Leak Check Date:	Comments:

	Canister Vacuum		Barometric Pressure (mmHg)	Ambient Temperature (°C) °F
	Manometer (mmHg)	Gauge (inHg)		
Pre-test		-29.93	29.96	36
Post		-9.38	24.96	44

Pretest Leak Rate	mmHg/10 minutes
	0.00

post

Elapsed Time	Clock Time	Gauge Vacuum (inHg)	~~Flow Meter Setting~~ 8hr (ml/min)	Comments
0	3:03	30.1		
60	9:03	28		
120	10:03	25		
180	11:03	22.5		
143 / 0	11:16 / 11:35	22		
60	12:35	18		
120	13:35	16		
180	14:35	14		
	1504	12		

TRC

APPENDIX D

ELLIS WASHER 2 FIELD DATA

Shop Towels
No Strip

CEM CALIBRATION DATA
EPA Method 25A

Firm:	G&K	Analyzer:	California Analytical
Location:	Manchester, NH	Span Value (S):	8936
Operator	W Deveau	Analyzer Range:	30000
Sample Location:	Washer 2		
Date:	27-Nov-12		

TOTAL HYDROCARBONS

PRE-TEST Calibration Error Check:

	Cylinder ID	Cylinder Gas Conc. (Ca)	Analyzer Response (C)	Slope (m)	Predicted Response (pr)	Calibration Error (<5%) (ce)
Zero, C_O		0.0	-14.17			
C_{low} (25-35% span)	xc0033311b	2922.0	2919.1	1.0021	2928.3	-0.3%
C_{mid} (45-55% span)	cc349917	4940.0	4941.1	1.0021	4950.6	-0.2%
C_{high} (80-90% span)	cc351430	8936.0	8941.0	1.0021	8955.2	-0.2%

Calibration Drift Check:

Run No:		1	2	3	4	AVG
Time						
Initial Zero	C_{OI}	-14.2	-24.2	35.7	33.0	
Initial Span	C_{MI}	2919.1	2923.0	2922.4	2934.1	
Final Zero	C_{OF}	-24.2	35.7	33.0	14.2	
Final Span	C_{MF}	2923.0	2922.4	2934.1	2936.1	
Calibration Drift (< 3%)	CD_O	0.1%	-0.7%	0.0%	0.2%	
Calibration Drift (< 3%)	CD_M	0.0%	0.0%	-0.1%	0.0%	
THC Conc. (ppm, wet)	C_{THCavg}					

Nomenclature

C_{high}	Span gas analyzer response
C_O	Zero gas analyzer response
C_a	Cylinder gas value
C_{OI}	Initial calibration zero response
C_{OF}	Final calibration zero response
C_{MI}	Initial calibration upscale response
C_{MF}	Final calibration upscale response
CDo	Zero calibration drift
CDm	Upscale calibration drift
m	Slope
pr	Predicted response
ce	Calibration error
C	Analyzer response
S	Span
C_{NMHC}	Non-methane hydrocarbon concentration
C_{THC}	Total hydrocarbon concentration
C_{CH4}	Methane concentration

Calculations

$$m = (C_{high} - C_O) / C_a$$

$$pr = m \times C_a$$

$$ce = (C - pr) / C_a \times 100$$

$$CD_O = (C_{OI} - C_{OF}) / S$$

$$C_{NMHC} = C_{THC} - C_{CH4}$$

$$ER = C_{avg} \quad MW \quad 2.5962e\text{-}9 \quad Q \quad 60$$

where,

MW = molecular weight of methane, 16.04
2.5962e-9 = conversion from ppm to pounds per standard cubic feet.
60 = conversion from minutes to hour
Q = flow in units of standard cubic feet per minute

h:\stack\connecticut\projects\2012\g&k - manchester, nh\compliance testing\field data\nov 27 - shop towels - no strip\[g&k - washer no. 2 emissions - shop towels no strip - 11-27-2012.xls]czilibrfation

Cylinder Gas	THC (ppm) Washer2
Zero ID	
Zero Expiration	
Low ID	XC03311B
Low Expiration	12/27/14
Low Concentration	2922
Mid ID	CC349917
Mid Expiration	7/7/2014
Mid Concentration	4940
High ID	CC351430
High Expiration	10/21/2014
High Concentration	8936

Calibration Error	THC (ppm) Washer2
Zero Response	-14.17
Zero Error (%)	-0.16
Low Response	2919.11
Low Error (%)	-0.1
Mid Response	4941.11
Mid Error (%)	0.02
High Response	8941.01
High Error (%)	0.06

Initial Bias	THC (ppm) Washer2
Zero Response	0
Zero Bias (%)	0
Span Concentration	2922
Span Response	0
Span Bias (%)	0

Shop Towels
No Strip

Log Averages	THC (ppm) Washer2	
27Nov2012 - 07:31:00	9260.61	
27Nov2012 - 07:32:00	10080.85	
27Nov2012 - 07:33:00	14344.49	
27Nov2012 - 07:34:00	14541.57	
27Nov2012 - 07:35:00	14853.25	
27Nov2012 - 07:36:00	13217.52	
27Nov2012 - 07:37:00	1271.67	
27Nov2012 - 07:38:00	3.77	
27Nov2012 - 07:39:00	993.57	
27Nov2012 - 07:40:00	3035.91	
27Nov2012 - 07:41:00	2922.47	
27Nov2012 - 07:42:00	1852.19	
27Nov2012 - 07:43:00	158.86	
27Nov2012 - 07:44:00	121.47	
27Nov2012 - 07:45:00	126.96	
27Nov2012 - 07:46:00	107.81	
27Nov2012 - 07:47:00	116.65	
27Nov2012 - 07:48:00	101.06	
27Nov2012 - 07:49:00	112.62	
27Nov2012 - 07:50:00	107.6	
27Nov2012 - 07:51:00	101.45	
27Nov2012 - 07:52:00	91.01	
27Nov2012 - 07:53:00	99.19	
27Nov2012 - 07:54:00	99.07	
27Nov2012 - 07:55:00	99.36	
27Nov2012 - 07:56:00	94.38	
27Nov2012 - 07:57:00	105.33	
27Nov2012 - 07:58:00	96.14	
27Nov2012 - 07:59:00	95.81	
27Nov2012 - 08:00:00	93.49	
27Nov2012 - 08:01:00	99.53	
27Nov2012 - 08:02:00	115.91	
27Nov2012 - 08:03:00	138.57	
27Nov2012 - 08:04:00	147.64	
27Nov2012 - 08:05:00	213.08	
27Nov2012 - 08:06:00	216.8	
27Nov2012 - 08:07:00	220.45	
27Nov2012 - 08:08:00	145.94	
27Nov2012 - 08:09:00	79.19	
27Nov2012 - 08:10:00	94.77	
27Nov2012 - 08:11:00	89.41	
27Nov2012 - 08:12:00	90.88	
27Nov2012 - 08:13:00	88.74	
27Nov2012 - 08:14:00	107.64	
27Nov2012 - 08:15:00	-24.15	ZERO
27Nov2012 - 08:16:00	948.46	
27Nov2012 - 08:17:00	2935.33	
27Nov2012 - 08:18:00	2922.96	SPAN
27Nov2012 - 08:19:00	2658.86	
27Nov2012 - 08:20:00	78.65	
27Nov2012 - 08:21:00	81.31	
27Nov2012 - 08:22:00	96.14	
27Nov2012 - 08:23:00	82.12	
27Nov2012 - 08:24:00	94.42	
27Nov2012 - 08:25:00	85.38	
27Nov2012 - 08:26:00	95.03	
27Nov2012 - 08:27:00	87.16	
27Nov2012 - 08:28:00	86.12	

Washer 2 Exhaust Summaries

Time	Ave THC Conc	MW	(SCFM)	lb/hr
0908 - 1039	239.0	12	316	0.14
1123 - 1253	96.6	12	318	0.06
1533 - 1653	133.6	12	305	0.08
Daily Average	157.8	12	313	0.09

27Nov2012 - 08:29:00	83.54
27Nov2012 - 08:30:00	70.18
27Nov2012 - 08:31:00	80.29
27Nov2012 - 08:32:00	76.82
27Nov2012 - 08:33:00	89.45
27Nov2012 - 08:34:00	71.42
27Nov2012 - 08:35:00	68.48
27Nov2012 - 08:36:00	71.38
27Nov2012 - 08:37:00	84.7
27Nov2012 - 08:38:00	83.69
27Nov2012 - 08:39:00	80.92
27Nov2012 - 08:40:00	82.25
27Nov2012 - 08:41:00	83.71
27Nov2012 - 08:42:00	79.1
27Nov2012 - 08:43:00	80.59
27Nov2012 - 08:44:00	76.63
27Nov2012 - 08:45:00	77.51
27Nov2012 - 08:46:00	81.94
27Nov2012 - 08:47:00	178.06
27Nov2012 - 08:48:00	218.79
27Nov2012 - 08:49:00	172.03
27Nov2012 - 08:50:00	242.81
27Nov2012 - 08:51:00	135.12
27Nov2012 - 08:52:00	141.88
27Nov2012 - 08:53:00	131.72
27Nov2012 - 08:54:00	83.76
27Nov2012 - 08:55:00	80.63
27Nov2012 - 08:56:00	97.19
27Nov2012 - 08:57:00	176.18
27Nov2012 - 08:58:00	174.11
27Nov2012 - 08:59:00	166.77
27Nov2012 - 09:00:00	157.69
27Nov2012 - 09:01:00	79.91
27Nov2012 - 09:02:00	73.11
27Nov2012 - 09:03:00	72.64
27Nov2012 - 09:04:00	73.45
27Nov2012 - 09:05:00	86.94
27Nov2012 - 09:06:00	74.35
27Nov2012 - 09:07:00	81.1

START WASH LOAD 1 (WASHER #2)

27Nov2012 - 09:08:00	77.78
27Nov2012 - 09:09:00	96.1
27Nov2012 - 09:10:00	429.16
27Nov2012 - 09:11:00	747.2
27Nov2012 - 09:12:00	637.01
27Nov2012 - 09:13:00	421.39
27Nov2012 - 09:14:00	294.13
27Nov2012 - 09:15:00	498.62
27Nov2012 - 09:16:00	387.8
27Nov2012 - 09:17:00	369.44
27Nov2012 - 09:18:00	403.28
27Nov2012 - 09:19:00	463.83
27Nov2012 - 09:20:00	519.77
27Nov2012 - 09:21:00	577.68
27Nov2012 - 09:22:00	634.25
27Nov2012 - 09:23:00	704.15
27Nov2012 - 09:24:00	455.78
27Nov2012 - 09:25:00	275.98
27Nov2012 - 09:26:00	475.77

27Nov2012 - 09:27:00	372.36
27Nov2012 - 09:28:00	398.88
27Nov2012 - 09:29:00	368.63
27Nov2012 - 09:30:00	323.52
27Nov2012 - 09:31:00	284.3
27Nov2012 - 09:32:00	354.46
27Nov2012 - 09:33:00	242.62
27Nov2012 - 09:34:00	499.7
27Nov2012 - 09:35:00	237.3
27Nov2012 - 09:36:00	234.97
27Nov2012 - 09:37:00	251.85
27Nov2012 - 09:38:00	300.64
27Nov2012 - 09:39:00	163.28
27Nov2012 - 09:40:00	469.6
27Nov2012 - 09:41:00	401.75
27Nov2012 - 09:42:00	838.04
27Nov2012 - 09:43:00	427.81
27Nov2012 - 09:44:00	349.72
27Nov2012 - 09:45:00	316.55
27Nov2012 - 09:46:00	120.54
27Nov2012 - 09:47:00	285.06
27Nov2012 - 09:48:00	60
27Nov2012 - 09:49:00	4.77
27Nov2012 - 09:50:00	142.48
27Nov2012 - 09:51:00	166.1
27Nov2012 - 09:52:00	63.27
27Nov2012 - 09:53:00	-3.71
27Nov2012 - 09:54:00	386.65
27Nov2012 - 09:55:00	316.33
27Nov2012 - 09:56:00	113.03
27Nov2012 - 09:57:00	11.67
27Nov2012 - 09:58:00	99.69
27Nov2012 - 09:59:00	116.06
27Nov2012 - 10:00:00	155.3
27Nov2012 - 10:01:00	27.16
27Nov2012 - 10:02:00	15.93
27Nov2012 - 10:03:00	53.78
27Nov2012 - 10:04:00	567.62
27Nov2012 - 10:05:00	506.61
27Nov2012 - 10:06:00	97.26
27Nov2012 - 10:07:00	88.53
27Nov2012 - 10:08:00	192.57
27Nov2012 - 10:09:00	431.91
27Nov2012 - 10:10:00	144.82
27Nov2012 - 10:11:00	204.4
27Nov2012 - 10:12:00	213.42
27Nov2012 - 10:13:00	237.54
27Nov2012 - 10:14:00	123.3
27Nov2012 - 10:15:00	108.23
27Nov2012 - 10:16:00	113.16
27Nov2012 - 10:17:00	149.61
27Nov2012 - 10:18:00	84.95
27Nov2012 - 10:19:00	89.82
27Nov2012 - 10:20:00	56.39
27Nov2012 - 10:21:00	150.89
27Nov2012 - 10:22:00	100.96
27Nov2012 - 10:23:00	56.48
27Nov2012 - 10:24:00	302.53
27Nov2012 - 10:25:00	145.47
27Nov2012 - 10:26:00	46.04
27Nov2012 - 10:27:00	22.58

27Nov2012 - 10:28:00	88.44	
27Nov2012 - 10:29:00	32.71	
27Nov2012 - 10:30:00	15.21	
27Nov2012 - 10:31:00	13.84	
27Nov2012 - 10:32:00	13.33	
27Nov2012 - 10:33:00	12.1	
27Nov2012 - 10:34:00	1.61	
27Nov2012 - 10:35:00	3.29	
27Nov2012 - 10:36:00	26.41	
27Nov2012 - 10:37:00	35.88	
27Nov2012 - 10:38:00	30.46	
27Nov2012 - 10:39:00	37.97	

END WASH LOAD 1 (WASHER #2)

AVERAGES	**239.0**	
27Nov2012 - 10:40:00	42.35	
27Nov2012 - 10:41:00	83.62	
27Nov2012 - 10:42:00	78.81	
27Nov2012 - 10:43:00	73.88	
27Nov2012 - 10:44:00	65.57	
27Nov2012 - 10:45:00	73.38	
27Nov2012 - 10:46:00	69.85	
27Nov2012 - 10:47:00	61.15	
27Nov2012 - 10:48:00	50.16	
27Nov2012 - 10:49:00	63.06	
27Nov2012 - 10:50:00	51.25	
27Nov2012 - 10:51:00	34.96	
27Nov2012 - 10:52:00	25.77	
27Nov2012 - 10:53:00	23.51	
27Nov2012 - 10:54:00	29.33	
27Nov2012 - 10:55:00	206.62	
27Nov2012 - 10:56:00	195.11	
27Nov2012 - 10:57:00	1918.33	
27Nov2012 - 10:58:00	2930.37	
27Nov2012 - 10:59:00	2922.36	SPAN
27Nov2012 - 11:00:00	2078.29	
27Nov2012 - 11:01:00	279.3	
27Nov2012 - 11:02:00	217.82	
27Nov2012 - 11:03:00	94.14	
27Nov2012 - 11:04:00	53.13	
27Nov2012 - 11:05:00	35.71	ZERO
27Nov2012 - 11:06:00	60.95	
27Nov2012 - 11:07:00	237.12	
27Nov2012 - 11:08:00	93.15	
27Nov2012 - 11:09:00	50.38	
27Nov2012 - 11:10:00	37.49	
27Nov2012 - 11:11:00	49.07	
27Nov2012 - 11:12:00	51.21	
27Nov2012 - 11:13:00	69.67	
27Nov2012 - 11:14:00	43.27	
27Nov2012 - 11:15:00	28.58	
27Nov2012 - 11:16:00	26.81	
27Nov2012 - 11:17:00	33.37	
27Nov2012 - 11:18:00	39.77	
27Nov2012 - 11:19:00	38.16	
27Nov2012 - 11:20:00	32.75	
27Nov2012 - 11:21:00	28.27	
27Nov2012 - 11:22:00	35.87	

START WASH LOAD 3 (WASHER #2)

27Nov2012 - 11:23:00	6.4
27Nov2012 - 11:24:00	123.44
27Nov2012 - 11:25:00	373.48
27Nov2012 - 11:26:00	361.33
27Nov2012 - 11:27:00	261.73
27Nov2012 - 11:28:00	156.81
27Nov2012 - 11:29:00	105.56
27Nov2012 - 11:30:00	118.11
27Nov2012 - 11:31:00	110.09
27Nov2012 - 11:32:00	129.59
27Nov2012 - 11:33:00	134.23
27Nov2012 - 11:34:00	142.87
27Nov2012 - 11:35:00	156.12
27Nov2012 - 11:36:00	164.7
27Nov2012 - 11:37:00	178.44
27Nov2012 - 11:38:00	201.6
27Nov2012 - 11:39:00	213.53
27Nov2012 - 11:40:00	133.62
27Nov2012 - 11:41:00	59.64
27Nov2012 - 11:42:00	163.51
27Nov2012 - 11:43:00	98.29
27Nov2012 - 11:44:00	94.17
27Nov2012 - 11:45:00	82.01
27Nov2012 - 11:46:00	130.58
27Nov2012 - 11:47:00	70.24
27Nov2012 - 11:48:00	112.72
27Nov2012 - 11:49:00	42.06
27Nov2012 - 11:50:00	42
27Nov2012 - 11:51:00	108.69
27Nov2012 - 11:52:00	46.77
27Nov2012 - 11:53:00	48.6
27Nov2012 - 11:54:00	48.67
27Nov2012 - 11:55:00	21.3
27Nov2012 - 11:56:00	46.96
27Nov2012 - 11:57:00	108.72
27Nov2012 - 11:58:00	202.46
27Nov2012 - 11:59:00	131.29
27Nov2012 - 12:00:00	114.81
27Nov2012 - 12:01:00	120.9
27Nov2012 - 12:02:00	114.37
27Nov2012 - 12:03:00	88.67
27Nov2012 - 12:04:00	36.03
27Nov2012 - 12:05:00	49.06
27Nov2012 - 12:06:00	119.72
27Nov2012 - 12:07:00	106.35
27Nov2012 - 12:08:00	24.46
27Nov2012 - 12:09:00	19.56
27Nov2012 - 12:10:00	206.49
27Nov2012 - 12:11:00	135.35
27Nov2012 - 12:12:00	50.94
27Nov2012 - 12:13:00	17.59
27Nov2012 - 12:14:00	41.55
27Nov2012 - 12:15:00	69.52
27Nov2012 - 12:16:00	82.63
27Nov2012 - 12:17:00	12.66
27Nov2012 - 12:18:00	30.26
27Nov2012 - 12:19:00	50.71
27Nov2012 - 12:20:00	94.5
27Nov2012 - 12:21:00	273.43
27Nov2012 - 12:22:00	97.84

27Nov2012 - 12:23:00	289.85	
27Nov2012 - 12:24:00	198.32	
27Nov2012 - 12:25:00	112.63	
27Nov2012 - 12:26:00	112.18	
27Nov2012 - 12:27:00	125.73	
27Nov2012 - 12:28:00	81.59	
27Nov2012 - 12:29:00	57.42	
27Nov2012 - 12:30:00	101.64	
27Nov2012 - 12:31:00	45.09	
27Nov2012 - 12:32:00	63.01	
27Nov2012 - 12:33:00	21.25	
27Nov2012 - 12:34:00	69.1	
27Nov2012 - 12:35:00	116.71	
27Nov2012 - 12:36:00	36	
27Nov2012 - 12:37:00	175.51	
27Nov2012 - 12:38:00	140.47	
27Nov2012 - 12:39:00	53.92	
27Nov2012 - 12:40:00	10.91	
27Nov2012 - 12:41:00	27.93	
27Nov2012 - 12:42:00	28.93	
27Nov2012 - 12:43:00	8.07	
27Nov2012 - 12:44:00	11.85	
27Nov2012 - 12:45:00	2.79	
27Nov2012 - 12:46:00	5.27	
27Nov2012 - 12:47:00	10.67	
27Nov2012 - 12:48:00	5.85	
27Nov2012 - 12:49:00	10.25	
27Nov2012 - 12:50:00	32.88	
27Nov2012 - 12:51:00	22.56	
27Nov2012 - 12:52:00	27.59	
END WASHER LOAD 3 (WASHER #2)		
AVERAGES	**96.6**	
27Nov2012 - 12:53:00	33.72	
27Nov2012 - 12:54:00	36.62	
27Nov2012 - 12:55:00	34.17	
27Nov2012 - 12:56:00	32.97	ZERO
27Nov2012 - 12:57:00	1705.49	
27Nov2012 - 12:58:00	2925.03	
27Nov2012 - 12:59:00	2934.09	SPAN
27Nov2012 - 13:00:00	1978.19	
27Nov2012 - 13:01:00	80.67	
27Nov2012 - 13:02:00	75.27	
27Nov2012 - 13:03:00	67.6	
27Nov2012 - 13:04:00	77.94	
27Nov2012 - 13:05:00	58.19	
27Nov2012 - 13:06:00	56.17	
27Nov2012 - 13:07:00	33.86	
27Nov2012 - 13:08:00	39.13	
27Nov2012 - 13:09:00	28.43	
27Nov2012 - 13:10:00	38.78	
27Nov2012 - 13:11:00	37.81	
27Nov2012 - 13:12:00	46.68	
27Nov2012 - 13:13:00	58.45	
27Nov2012 - 13:14:00	52.48	
27Nov2012 - 13:15:00	53.08	
27Nov2012 - 13:16:00	36.42	
27Nov2012 - 13:17:00	51.76	
27Nov2012 - 13:18:00	40.73	
27Nov2012 - 13:19:00	33.52	

27Nov2012 - 13:20:00	43.2
27Nov2012 - 13:21:00	36.83
27Nov2012 - 13:22:00	49.68
27Nov2012 - 13:23:00	44.74
27Nov2012 - 13:24:00	47.95
27Nov2012 - 13:25:00	38.07
27Nov2012 - 13:26:00	43.74
27Nov2012 - 13:27:00	43.54
27Nov2012 - 13:28:00	38.83
27Nov2012 - 13:29:00	44.94
27Nov2012 - 13:30:00	42.44
27Nov2012 - 13:31:00	51.07
27Nov2012 - 13:32:00	42.17
27Nov2012 - 13:33:00	43.49
27Nov2012 - 13:34:00	45.77
27Nov2012 - 13:35:00	33.8
27Nov2012 - 13:36:00	29.1
27Nov2012 - 13:37:00	43.94
27Nov2012 - 13:38:00	43.87
27Nov2012 - 13:39:00	40.23
27Nov2012 - 13:40:00	42.89
27Nov2012 - 13:41:00	39.85
27Nov2012 - 13:42:00	45.54
27Nov2012 - 13:43:00	55.4
27Nov2012 - 13:44:00	55.84
27Nov2012 - 13:45:00	52.98
27Nov2012 - 13:46:00	60.85
27Nov2012 - 13:47:00	106.88
27Nov2012 - 13:48:00	195.27
27Nov2012 - 13:49:00	193.63
27Nov2012 - 13:50:00	128.98
27Nov2012 - 13:51:00	86.89
27Nov2012 - 13:52:00	225.95
27Nov2012 - 13:53:00	229.24
27Nov2012 - 13:54:00	231.21
27Nov2012 - 13:55:00	228
27Nov2012 - 13:56:00	237.22
27Nov2012 - 13:57:00	233.73
27Nov2012 - 13:58:00	235.88
27Nov2012 - 13:59:00	241.66
27Nov2012 - 14:00:00	239.11
27Nov2012 - 14:01:00	245.07
27Nov2012 - 14:02:00	247.77
27Nov2012 - 14:03:00	239.97
27Nov2012 - 14:04:00	231.33
27Nov2012 - 14:05:00	145.88
27Nov2012 - 14:06:00	86.89
27Nov2012 - 14:07:00	61.29
27Nov2012 - 14:08:00	48.63
27Nov2012 - 14:09:00	49.42
27Nov2012 - 14:10:00	44.47
27Nov2012 - 14:11:00	35.74
27Nov2012 - 14:12:00	51.97
27Nov2012 - 14:13:00	47.37
27Nov2012 - 14:14:00	43.46
27Nov2012 - 14:15:00	41.47
27Nov2012 - 14:16:00	44.52
27Nov2012 - 14:17:00	47.04
27Nov2012 - 14:18:00	46.66
27Nov2012 - 14:19:00	44.2
27Nov2012 - 14:20:00	47.85

27Nov2012 - 14:21:00	47
27Nov2012 - 14:22:00	87.37
27Nov2012 - 14:23:00	180.7
27Nov2012 - 14:24:00	178.54
27Nov2012 - 14:25:00	169.73
27Nov2012 - 14:26:00	68.36
27Nov2012 - 14:27:00	83.09
27Nov2012 - 14:28:00	54.65
27Nov2012 - 14:29:00	50.07
27Nov2012 - 14:30:00	40.71
27Nov2012 - 14:31:00	41.62
27Nov2012 - 14:32:00	41.96
27Nov2012 - 14:33:00	34.98
27Nov2012 - 14:34:00	39.95
27Nov2012 - 14:35:00	49.2
27Nov2012 - 14:36:00	56.53
27Nov2012 - 14:37:00	56.56
27Nov2012 - 14:38:00	54.43
27Nov2012 - 14:39:00	48.33
27Nov2012 - 14:40:00	55.61
27Nov2012 - 14:41:00	55.48
27Nov2012 - 14:42:00	50.48
27Nov2012 - 14:43:00	42.19
27Nov2012 - 14:44:00	51.43
27Nov2012 - 14:45:00	55.65
27Nov2012 - 14:46:00	42.69
27Nov2012 - 14:47:00	59.16
27Nov2012 - 14:48:00	43.49
27Nov2012 - 14:49:00	31.86
27Nov2012 - 14:50:00	32.07
27Nov2012 - 14:51:00	40.49
27Nov2012 - 14:52:00	35.88
27Nov2012 - 14:53:00	37.71
27Nov2012 - 14:54:00	38.83
27Nov2012 - 14:55:00	40.26
27Nov2012 - 14:56:00	40.45
27Nov2012 - 14:57:00	40.38
27Nov2012 - 14:58:00	42.07
27Nov2012 - 14:59:00	40.4
27Nov2012 - 15:00:00	40.35
27Nov2012 - 15:01:00	32.48
27Nov2012 - 15:02:00	50.02
27Nov2012 - 15:03:00	40.13
27Nov2012 - 15:04:00	42.63
27Nov2012 - 15:05:00	31.16
27Nov2012 - 15:06:00	35.92
27Nov2012 - 15:07:00	30.88
27Nov2012 - 15:08:00	36.6
27Nov2012 - 15:09:00	42.54
27Nov2012 - 15:10:00	44.42
27Nov2012 - 15:11:00	36.76
27Nov2012 - 15:12:00	33.2
27Nov2012 - 15:13:00	31.29
27Nov2012 - 15:14:00	42.04
27Nov2012 - 15:15:00	38.29
27Nov2012 - 15:16:00	36.61
27Nov2012 - 15:17:00	41.56
27Nov2012 - 15:18:00	37.47
27Nov2012 - 15:19:00	20.78
27Nov2012 - 15:20:00	39.6
27Nov2012 - 15:21:00	35.23

27Nov2012 - 15:22:00	34.72
27Nov2012 - 15:23:00	26.55
27Nov2012 - 15:24:00	32.25
27Nov2012 - 15:25:00	36.42
27Nov2012 - 15:26:00	47.41
27Nov2012 - 15:27:00	49.3
27Nov2012 - 15:28:00	41.69
27Nov2012 - 15:29:00	53.29
27Nov2012 - 15:30:00	62.25
27Nov2012 - 15:31:00	50.71

START WASH LOAD 5 (WASHER #2)

27Nov2012 - 15:32:00	48.09
27Nov2012 - 15:33:00	278
27Nov2012 - 15:34:00	483.76
27Nov2012 - 15:35:00	445.5
27Nov2012 - 15:36:00	347.14
27Nov2012 - 15:37:00	181.89
27Nov2012 - 15:38:00	193.79
27Nov2012 - 15:39:00	208.49
27Nov2012 - 15:40:00	224.16
27Nov2012 - 15:41:00	230.7
27Nov2012 - 15:42:00	246.73
27Nov2012 - 15:43:00	279.69
27Nov2012 - 15:44:00	263.18
27Nov2012 - 15:45:00	192.26
27Nov2012 - 15:46:00	157.41
27Nov2012 - 15:47:00	188
27Nov2012 - 15:48:00	166.93
27Nov2012 - 15:49:00	190.43
27Nov2012 - 15:50:00	149.77
27Nov2012 - 15:51:00	84.93
27Nov2012 - 15:52:00	133.69
27Nov2012 - 15:53:00	165.96
27Nov2012 - 15:54:00	149.18
27Nov2012 - 15:55:00	63.17
27Nov2012 - 15:56:00	87.53
27Nov2012 - 15:57:00	104.54
27Nov2012 - 15:58:00	72.6
27Nov2012 - 15:59:00	65.86
27Nov2012 - 16:00:00	12.25
27Nov2012 - 16:01:00	95.19
27Nov2012 - 16:02:00	269.52
27Nov2012 - 16:03:00	257.42
27Nov2012 - 16:04:00	167.16
27Nov2012 - 16:05:00	131.18
27Nov2012 - 16:06:00	182.93
27Nov2012 - 16:07:00	87.39
27Nov2012 - 16:08:00	127.76
27Nov2012 - 16:09:00	15.28
27Nov2012 - 16:10:00	90.97
27Nov2012 - 16:11:00	179.62
27Nov2012 - 16:12:00	75.92
27Nov2012 - 16:13:00	16.9
27Nov2012 - 16:14:00	202.07
27Nov2012 - 16:15:00	201.73
27Nov2012 - 16:16:00	86.99
27Nov2012 - 16:17:00	21.17
27Nov2012 - 16:18:00	61.01
27Nov2012 - 16:19:00	116.02

27Nov2012 - 16:20:00	63.05	
27Nov2012 - 16:21:00	5.71	
27Nov2012 - 16:22:00	19.56	
27Nov2012 - 16:23:00	33.07	
27Nov2012 - 16:24:00	42.29	
27Nov2012 - 16:25:00	64.83	
27Nov2012 - 16:26:00	613.2	
27Nov2012 - 16:27:00	336.9	
27Nov2012 - 16:28:00	227.22	
27Nov2012 - 16:29:00	174.32	
27Nov2012 - 16:30:00	122.4	
27Nov2012 - 16:31:00	69.53	
27Nov2012 - 16:32:00	122.43	
27Nov2012 - 16:33:00	105.64	
27Nov2012 - 16:34:00	81.35	
27Nov2012 - 16:35:00	29.8	
27Nov2012 - 16:36:00	108.67	
27Nov2012 - 16:37:00	150.32	
27Nov2012 - 16:38:00	38.83	
27Nov2012 - 16:39:00	175.17	
27Nov2012 - 16:40:00	190.86	
27Nov2012 - 16:41:00	93.15	
27Nov2012 - 16:42:00	19.24	
27Nov2012 - 16:43:00	29.72	
27Nov2012 - 16:44:00	15	
27Nov2012 - 16:45:00	9.17	
27Nov2012 - 16:46:00	9.42	
27Nov2012 - 16:47:00	3.98	
27Nov2012 - 16:48:00	3.52	
27Nov2012 - 16:49:00	6.74	
27Nov2012 - 16:50:00	6.95	
27Nov2012 - 16:51:00	6.91	
27Nov2012 - 16:52:00	40.58	
END WASH LOAD 5 (WASHER #2)		
AVERAGES	**133.6**	
DAILY AVERAGE	**157.8**	
27Nov2012 - 16:53:00	24.61	
27Nov2012 - 16:54:00	33.12	
27Nov2012 - 16:55:00	57.93	
27Nov2012 - 16:56:00	70.4	
27Nov2012 - 16:57:00	67.15	
27Nov2012 - 16:58:00	69.68	
27Nov2012 - 16:59:00	59.35	
27Nov2012 - 17:00:00	67.03	
27Nov2012 - 17:01:00	64.55	
27Nov2012 - 17:02:00	70.81	
27Nov2012 - 17:03:00	59.87	
27Nov2012 - 17:04:00	59.95	
27Nov2012 - 17:05:00	51.71	
27Nov2012 - 17:06:00	63.71	
27Nov2012 - 17:07:00	25.13	
27Nov2012 - 17:08:00	19.17	ZERO
27Nov2012 - 17:09:00	2589.89	
27Nov2012 - 17:10:00	2936.11	SPAN
27Nov2012 - 17:11:00	2933.95	
27Nov2012 - 17:12:00	245.74	
27Nov2012 - 17:13:00	83.36	
27Nov2012 - 17:14:00	81.71	

27Nov2012 - 17:15:00	69.53
27Nov2012 - 17:16:00	67.23
27Nov2012 - 17:17:00	61.16
27Nov2012 - 17:18:00	65.37
27Nov2012 - 17:19:00	62.5
27Nov2012 - 17:20:00	61.93
27Nov2012 - 17:21:00	53.9
27Nov2012 - 17:22:00	63.2
27Nov2012 - 17:23:00	66.97
27Nov2012 - 17:24:00	59.59
27Nov2012 - 17:25:00	58.27
27Nov2012 - 17:26:00	58.72
27Nov2012 - 17:27:00	65.82
27Nov2012 - 17:28:00	60.59
27Nov2012 - 17:29:00	61.03
27Nov2012 - 17:30:00	60.76
27Nov2012 - 17:31:00	60.15
27Nov2012 - 17:32:00	39.29
27Nov2012 - 17:33:00	35.96
27Nov2012 - 17:34:00	36.41
27Nov2012 - 17:35:00	40.86
27Nov2012 - 17:36:00	42.52
27Nov2012 - 17:37:00	36.46
27Nov2012 - 17:38:00	41.05
27Nov2012 - 17:39:00	33.13
27Nov2012 - 17:40:00	39.61
27Nov2012 - 17:41:00	42.92
27Nov2012 - 17:42:00	47.73
27Nov2012 - 17:43:00	53.83
27Nov2012 - 17:44:00	42.51
27Nov2012 - 17:45:00	41.44
27Nov2012 - 17:46:00	45.21
27Nov2012 - 17:47:00	35.16
27Nov2012 - 17:48:00	42.46
27Nov2012 - 17:49:00	39.36
27Nov2012 - 17:50:00	44.94
27Nov2012 - 17:51:00	42.09
27Nov2012 - 17:52:00	33.09
27Nov2012 - 17:53:00	33.89
27Nov2012 - 17:54:00	39.94
27Nov2012 - 17:55:00	31.95
27Nov2012 - 17:56:00	33.25
27Nov2012 - 17:57:00	39.03
27Nov2012 - 17:58:00	40.16
27Nov2012 - 17:59:00	46.53
27Nov2012 - 18:00:00	38.3
27Nov2012 - 18:01:00	50.37
27Nov2012 - 18:02:00	49.53
27Nov2012 - 18:03:00	30.34
27Nov2012 - 18:04:00	44.5
27Nov2012 - 18:05:00	31.39
27Nov2012 - 18:06:00	39.98
27Nov2012 - 18:07:00	61.25
27Nov2012 - 18:08:00	65.8
27Nov2012 - 18:09:00	61.89
27Nov2012 - 18:10:00	52.71
27Nov2012 - 18:11:00	71.78
27Nov2012 - 18:12:00	62.77
27Nov2012 - 18:13:00	61.61
27Nov2012 - 18:14:00	48.05
27Nov2012 - 18:15:00	53.72

27Nov2012 - 18:16:00	36.02
27Nov2012 - 18:17:00	32.83
27Nov2012 - 18:18:00	42.23
27Nov2012 - 18:19:00	29.29
27Nov2012 - 18:20:00	37.33
27Nov2012 - 18:21:00	50.93
27Nov2012 - 18:22:00	50.35
27Nov2012 - 18:23:00	42.93
27Nov2012 - 18:24:00	46.7
27Nov2012 - 18:25:00	37.1
27Nov2012 - 18:26:00	43
27Nov2012 - 18:27:00	44.16
27Nov2012 - 18:28:00	39.07
27Nov2012 - 18:29:00	53.15
27Nov2012 - 18:30:00	34.04
27Nov2012 - 18:31:00	33.42
27Nov2012 - 18:32:00	44.29
27Nov2012 - 18:33:00	46.98
27Nov2012 - 18:34:00	39.79
27Nov2012 - 18:35:00	53.82
27Nov2012 - 18:36:00	43.43
27Nov2012 - 18:37:00	43.16
27Nov2012 - 18:38:00	50.86
27Nov2012 - 18:39:00	37.12
27Nov2012 - 18:40:00	55.84
27Nov2012 - 18:41:00	47.01
27Nov2012 - 18:42:00	52.99
27Nov2012 - 18:43:00	51.81
27Nov2012 - 18:44:00	40.34
27Nov2012 - 18:45:00	44.59
27Nov2012 - 18:46:00	41.94
27Nov2012 - 18:47:00	29.41
27Nov2012 - 18:48:00	41.38
27Nov2012 - 18:49:00	43.48
27Nov2012 - 18:50:00	26.78
27Nov2012 - 18:51:00	37.17
27Nov2012 - 18:52:00	54.37
27Nov2012 - 18:53:00	41.91
27Nov2012 - 18:54:00	48.78
27Nov2012 - 18:55:00	48.32
27Nov2012 - 18:56:00	35.8
27Nov2012 - 18:57:00	61.8
27Nov2012 - 18:58:00	127.95
27Nov2012 - 18:59:00	73.03
27Nov2012 - 19:00:00	69.26
27Nov2012 - 19:01:00	46.92
27Nov2012 - 19:02:00	64.25
27Nov2012 - 19:03:00	50.39
27Nov2012 - 19:04:00	59.01
27Nov2012 - 19:05:00	61.95
27Nov2012 - 19:06:00	52.69
27Nov2012 - 19:07:00	24.55
27Nov2012 - 19:08:00	25.59
27Nov2012 - 19:09:00	29.44
27Nov2012 - 19:10:00	50.36
27Nov2012 - 19:11:00	40.76
27Nov2012 - 19:12:00	35.23
27Nov2012 - 19:13:00	35.89
27Nov2012 - 19:14:00	48.12
27Nov2012 - 19:15:00	51.32
27Nov2012 - 19:16:00	48.01

27Nov2012 - 19:17:00	49.67
27Nov2012 - 19:18:00	47.95
27Nov2012 - 19:19:00	45.53
27Nov2012 - 19:20:00	49.56
27Nov2012 - 19:21:00	52.79
27Nov2012 - 19:22:00	45.94
27Nov2012 - 19:23:00	49.44
27Nov2012 - 19:24:00	37.01
27Nov2012 - 19:25:00	49.69
27Nov2012 - 19:26:00	51.01
27Nov2012 - 19:27:00	53.73
27Nov2012 - 19:28:00	46.04
27Nov2012 - 19:29:00	35.49
27Nov2012 - 19:30:00	45.92
27Nov2012 - 19:31:00	48.09
27Nov2012 - 19:32:00	45.65
27Nov2012 - 19:33:00	45.26
27Nov2012 - 19:34:00	48.05
27Nov2012 - 19:35:00	38.62
27Nov2012 - 19:36:00	21.24
27Nov2012 - 19:37:00	39.04
27Nov2012 - 19:38:00	36.83
27Nov2012 - 19:39:00	26.28
27Nov2012 - 19:40:00	48.64
27Nov2012 - 19:41:00	37.7
27Nov2012 - 19:42:00	28.38
27Nov2012 - 19:43:00	50.28
27Nov2012 - 19:44:00	53.9
27Nov2012 - 19:45:00	58.56
27Nov2012 - 19:46:00	56.83
27Nov2012 - 19:47:00	66.09
27Nov2012 - 19:48:00	41.29
27Nov2012 - 19:49:00	40.57
27Nov2012 - 19:50:00	59.27
27Nov2012 - 19:51:00	66.97
27Nov2012 - 19:52:00	52.03
27Nov2012 - 19:53:00	22.45
27Nov2012 - 19:54:00	32.89
27Nov2012 - 19:55:00	43.4
27Nov2012 - 19:56:00	44.68
27Nov2012 - 19:57:00	51.24
27Nov2012 - 19:58:00	55.07
27Nov2012 - 19:59:00	39.55
27Nov2012 - 20:00:00	35.41
27Nov2012 - 20:01:00	45.04
27Nov2012 - 20:02:00	43.08
27Nov2012 - 20:03:00	36.46
27Nov2012 - 20:04:00	45.5
27Nov2012 - 20:05:00	26.16
27Nov2012 - 20:06:00	48.98
27Nov2012 - 20:07:00	37.75
27Nov2012 - 20:08:00	44.48
27Nov2012 - 20:09:00	32.75
27Nov2012 - 20:10:00	32.22
27Nov2012 - 20:11:00	48.94
27Nov2012 - 20:12:00	40.91
27Nov2012 - 20:13:00	37.29
27Nov2012 - 20:14:00	39.74
27Nov2012 - 20:15:00	37.78
27Nov2012 - 20:16:00	35.51
27Nov2012 - 20:17:00	44.54

27Nov2012 - 20:18:00	39.12
27Nov2012 - 20:19:00	37.54
27Nov2012 - 20:20:00	36.28
27Nov2012 - 20:21:00	44.41
27Nov2012 - 20:22:00	42.92
27Nov2012 - 20:23:00	49.17
27Nov2012 - 20:24:00	44.8
27Nov2012 - 20:25:00	39.58
27Nov2012 - 20:26:00	38.12
27Nov2012 - 20:27:00	59.32
27Nov2012 - 20:28:00	41.42
27Nov2012 - 20:29:00	24.15
27Nov2012 - 20:30:00	34.95
27Nov2012 - 20:31:00	60.45
27Nov2012 - 20:32:00	34.34
27Nov2012 - 20:33:00	57.83
27Nov2012 - 20:34:00	38.68
27Nov2012 - 20:35:00	201.75
27Nov2012 - 20:36:00	1482.2
27Nov2012 - 20:37:00	2057.22
27Nov2012 - 20:38:00	2467.94
27Nov2012 - 20:39:00	1954.23
27Nov2012 - 20:40:00	2000.26
27Nov2012 - 20:41:00	909.68

Ellis Washer # 2 - Shop Towels No Strip
G&K Services
Methods 1-4 Summary

Run No.	W2 - STNS - 1	W2 - STNS - 2	W2 - STNS -3	
Date:	27-Nov-12	27-Nov-12	27-Nov-12	
Start Time	9:08	11:23	15:33	
Stop Time	10:39	12:53	16:53	AVERAGES
Barometric Pressure, (inches of mercury)	29.99	29.99	29.99	29.99
Net Sampling Time, (minutes)	91.0	90.0	80.0	87.0
Wet Bulb Temp., (F)	32	36	35	34
Dry Bulb Temp., (F)	33	38	36	36
Calculated Saturation Constant	0.00604	0.00709	0.00681	0.0066
Moisture, (percent)	0.6	0.6	0.6	0.6
Dry Mole Fraction	0.9944	0.9936	0.9936	0.9938
CO_2 Concentration, (percent dry)	0.0	0.0	0.0	0.0
O_2 Concentration, (percent dry)	20.9	20.9	20.9	20.9
CO and N_2, (percent dry)	79.1	79.1	79.1	79.1
Dry Molecular Weight, (lb/lb mole)	28.84	28.84	28.84	28.84
Wet Molecular Weight, (lb/lb mole)	28.77	28.77	28.77	28.77
Excess Air at Stack, (percent)	-118750.0	-118750.0	-118750.0	-118750.0
Stack Area, (square inches)	28.3	28.3	28.3	28.3
Static Pressure, (inches of water)	-1.30	-1.40	-1.30	-1.33
Stack Pressure, (inches of mercury)	29.89	29.89	29.89	29.89
Average Stack Temperature, (°F)	33	38	36	36
Average Sqroot of ΔP	0.4617	0.4659	0.4458	0.4578
SDE Average	10.252	10.394	9.930	10.192
Pitot Coefficient	0.84	0.84	0.84	0.84
Stack Gas Velocity, (actual feet per minute - afpm)	1,506	1,528	1,459	1,498
Stack Flowrate, (actual cubic feet per minute - acfm)	296	300	287	294
Stack Flowrate, (standard cubic feet per minute - scfm)	316	318	305	313
Stack Flowrate, (dry standard cubic feet per minute - dscfm)	315	316	303	311

Method 2 Data Sheet

Washer 2

1

Plant	G+K	Date	11-27-2012
Location	Washer 2	Time	9:13

1

Stack Diameter	6	"	Area, A	ft²
Barometric Pressure, P_b	29.99	"Hg	Meter Temp.	°F
% Moisture		%H_2O	Stack O_2	%
Static Pressure, P_g	-1.3	"H_2O	Stack CO_2	%
Pitot Coefficient, C_p	0.84		MW (wet)	lb/lb-mole

Port	Point	ΔP	$\sqrt{\Delta P}$	T_S (°F)	+ θ clockwise - θ counter-clockwise	$\sqrt{\Delta P}\cos\theta$	
A	1	.21		33	+2°		
	2	.18		32			
	3	.17		31	-2°		
	4	.19		32			
	5	.20		32	+2°		
	6	.22		32	+2°		
B	1	.26		32	0		
	2	.26		32			
	3	.25		32	-4°		
	4	.21		36			
	5	.23		37	0		
	6	.19		36	+5°		
		Dry Wet Bulb			32		
	Average						

Average Absolute Temp.

Absolute Gas Temperature, $T_{ST} = T_S + 460°$

Absolute Gas Pressure, $P_S = P_b + P_g/13.6$ _____ "Hg

Gas Velocity, $V_s = (85.49)\ C_p \sqrt{\Delta P}_{avg} \sqrt{\frac{T_{ST}\ avg}{P_S\ M_W}}$ _____ ft/sec

Actual Gas Flowrate, $Q_a = (V_s)\ (60)\ (A)$ _____ ACFM

Standard Gas Flowrate, $Q_{std} = \left[\frac{528°R}{T_{ST}}\right]\left[\frac{P_S}{29.92}\right]\left[\frac{100 - \%H_2O}{100}\right] Q_a$ _____ DSCFM

Washer 2

2

Method 2 Data Sheet

Plant	G+K	Date	11-27-2012
Location	Washer 2	Time	11:25

Stack Diameter	-1.4	2P	Area, A		ft^2
Barometric Pressure, P_b		"Hg	Meter Temp.		°F
% Moisture		$\%H_2O$	Stack O_2		%
Static Pressure, P_g		$"H_2O$	Stack CO_2		%
Pitot Coefficient, C_p	.84		MW (wet)		lb/lb-mole

2

Port	Point	ΔP	$\sqrt{\Delta P}$	T_S (°F)	+ θ clockwise - θ counter-clockwise	$\sqrt{\Delta P}\cos\theta$	
A	1	.22		42			
	2	.18		39			
	3	.17		38			
	4	.24		38			
	5	.28		37			
	6	.24		37			
B	1	.26		37			
	2	.24		37			
	3	.19		37			
	4	.18		37			
	5	.20		37			
	6	.22		37			
	7						
		wet bulb		36			
	Average						
		Average Absolute Temp.					

Absolute Gas Temperature, $T_{ST} = T_S + 460°$

Absolute Gas Pressure, $P_S = P_b + P_g/13.6$ _____ "Hg

Gas Velocity, $Vs = (85.49)\ Cp\ \sqrt{\Delta P}\ avg\ \sqrt{\frac{T_{ST}\ avg}{P_S\ M_W}}$ _____ ft/sec

Actual Gas Flowrate, $Qa = (V_s)\ (60)\ (A)$ _____ ACFM

Standard Gas Flowrate, $Q_{std} = \left[\frac{528°R}{T_{ST}}\right]\left[\frac{P_S}{29.92}\right]\left[\frac{100 - \%H_2O}{100}\right]Qa$ _____ DSCFM

Method 2 Data Sheet

Washer 2
3

Plant	G+K	Date	11-27-2012
Location	Washer 2	Time	15:42

Stack Diameter	6	"	Area, A	ft^2
Barometric Pressure, P_b	29.99	"Hg	Meter Temp.	°F
% Moisture		$\%H_2O$	Stack O_2	%
Static Pressure, P_g	-1.3	$"H_2O$	Stack CO_2	%
Pitot Coefficient, C_p	.84		MW (wet)	lb/lb-mole

Port	Point	ΔP	$\sqrt{\Delta P}$	T_s (°F)	+ θ clockwise - θ counter-clockwise	$\sqrt{\Delta P}\cos\theta$	
A	1	.19		36			
	2	.18		36			
	3	.18		36			
	4	.17		36			
	5	.21		36			
	6	.21		36			
B	1	.21		36			
	2	.23		37			
	3	.22		37			
	4	.19		36			
	5	.19		36			
	6	.21		36			
	Average						

wet bulb 35

Average Absolute Temp.

Absolute Gas Temperature, $T_{ST} = T_S + 460°$

Absolute Gas Pressure, $P_S = P_b + P_g/13.6$ _____ "Hg

Gas Velocity, $V_s = (85.49)\ C_p \sqrt{\Delta P}_{avg} \sqrt{\frac{T_{ST}\ avg}{P_S\ M_W}}$ _____ ft/sec

Actual Gas Flowrate, $Q_a = (V_s)\ (60)\ (A)$ _____ ACFM

Standard Gas Flowrate, $Q_{std} = \left[\frac{528°R}{T_{ST}}\right]\left[\frac{P_S}{29.92}\right]\left[\frac{100 - \%H_2O}{100}\right] Q_a$ _____ DSCFM

Shop Towel w/ strip

CEM CALIBRATION DATA
EPA Method 25A

Firm:	G&K	Analyzer:	California Analytical
Location:	Manchester, NH	Span Value (S):	8936
Operator	W Deveau	Analyzer Range:	30000
Sample Location:	Washer 2		
Date:	28-Nov-12		

TOTAL HYDROCARBONS

PRE-TEST Calibration Error Check:

	Cylinder ID	Cylinder Gas Conc. (Ca)	Analyzer Response (C)	Slope (m)	Predicted Response (pr)	Calibration Error (<5%) (ce)
Zero, C_O		0.0	0.15			
C_{low} (25-35% span)	xc0033311b	2922.0	2922.6	0.9999	2921.6	0.0%
C_{mid} (45-55% span)	cc349917	4940.0	4942.1	0.9999	4939.3	0.1%
C_{high} (80-90% span)	cc351430	8936.0	8934.9	0.9999	8934.8	0.0%

Calibration Drift Check:

Run No:		1	2	3	4	AVG
Time						
Initial Zero	C_{OI}	0.2	5.4			
Initial Span	C_{MI}	2922.6	2910.8			
Final Zero	C_{OF}	5.4	2.4			
Final Span	C_{MF}	2910.8	2928.6			
Calibration Drift (< 3%)	CD_O	-0.1%	0.0%	0.0%	0.0%	
Calibration Drift (< 3%)	CD_M	0.1%	-0.2%			
THC Conc. (ppm, wet)	C_{THCavg}					

Nomenclature

C_{high}	Span gas analyzer response
C_O	Zero gas analyzer response
C_a	Cylinder gas value
C_{OI}	Initial calibration zero response
C_{OF}	Final calibration zero response
C_{MI}	Initial calibration upscale response
C_{MF}	Final calibration upscale response
CDo	Zero calibration drift
CDm	Upscale calibration drift
m	Slope
pr	Predicted response
ce	Calibration error
C	Analyzer response
S	Span
C_{NMHC}	Non-methane hydrocarbon concentration
C_{THC}	Total hydrocarbon concentration
C_{CH4}	Methane concentration

Calculations

$$m = (C_{high} - C_O) / C_a$$

$$pr = m \times C_a$$

$$ce = (C - pr) / C_a \times 100$$

$$CD_O = (C_{OI} - C_{OF}) / S$$

$$C_{NMHC} = C_{THC} - C_{CH4}$$

$$ER = C_{avg} \quad MW \quad 2.5962e\text{-}9 \quad Q \quad 60$$

where,

MW = molecular weight of methane, 16.04
2.5962e-9 = conversion from ppm to pounds per standard cubic feet.
60 = conversion from minutes to hour
Q = flow in units of standard cubic feet per minute

h:\stack\connecticut\projects\2012\g&k - manchester, nh\compliance testing\field data\nov 28 - shop towels with strip\[g&k - washer no. 2 emissions - shop towels - 11-28-2012.xls]calibrations 12/13/11

Cylinder Gas	THC (ppm) Washer2
Zero ID	
Zero Expiration	
Low ID	XC03311B
Low Expiration	42000
Low Concentration	2922
Mid ID	CC349917
Mid Expiration	7/7/2014
Mid Concentration	4940
High ID	CC351430
High Expiration	10/21/2014
High Concentration	8936

Calibration Error	THC (ppm) Washer2
Zero Response	0.15
Zero Error (%)	0
Low Response	2922.61
Low Error (%)	0.02
Mid Response	4942.11
Mid Error (%)	0.04
High Response	8934.91
High Error (%)	-0.01

Initial Bias	THC (ppm) Washer2
Zero Response	0
Zero Bias (%)	0
Span Concentration	2922
Span Response	0
Span Bias (%)	0

Stop Tower b
w/ Strip

Log Averages	THC (ppm) Washer2
28Nov2012 - 07:31:00	-4.29
28Nov2012 - 07:32:00	0.46
28Nov2012 - 07:33:00	4.77
28Nov2012 - 07:34:00	16.18
28Nov2012 - 07:35:00	18.23
28Nov2012 - 07:36:00	8.52
28Nov2012 - 07:37:00	13.11
28Nov2012 - 07:38:00	20.86
28Nov2012 - 07:39:00	6.18
28Nov2012 - 07:40:00	28.22
28Nov2012 - 07:41:00	17.68
28Nov2012 - 07:42:00	9.25
28Nov2012 - 07:43:00	20.28
28Nov2012 - 07:44:00	29.48
28Nov2012 - 07:45:00	25.61
28Nov2012 - 07:46:00	26.73
28Nov2012 - 07:47:00	22.99
28Nov2012 - 07:48:00	62.98
28Nov2012 - 07:49:00	76.68
28Nov2012 - 07:50:00	74.54
28Nov2012 - 07:51:00	61.88
28Nov2012 - 07:52:00	75.23
28Nov2012 - 07:53:00	70.22
28Nov2012 - 07:54:00	81.21
28Nov2012 - 07:55:00	80.73
28Nov2012 - 07:56:00	72.09
28Nov2012 - 07:57:00	67.65
28Nov2012 - 07:58:00	76.63
28Nov2012 - 07:59:00	64.5
28Nov2012 - 08:00:00	60.87
28Nov2012 - 08:01:00	60.6
28Nov2012 - 08:02:00	54.66
28Nov2012 - 08:03:00	59.84
28Nov2012 - 08:04:00	59.37
28Nov2012 - 08:05:00	55.24
28Nov2012 - 08:06:00	51.92
28Nov2012 - 08:07:00	49.55
28Nov2012 - 08:08:00	59.35
28Nov2012 - 08:09:00	54.17
28Nov2012 - 08:10:00	54.22
28Nov2012 - 08:11:00	63.9
28Nov2012 - 08:12:00	57.18
28Nov2012 - 08:13:00	55.19
28Nov2012 - 08:14:00	51.67
28Nov2012 - 08:15:00	48.7
28Nov2012 - 08:16:00	52.66
28Nov2012 - 08:17:00	59.02
28Nov2012 - 08:18:00	40.67
28Nov2012 - 08:19:00	30.65
28Nov2012 - 08:20:00	40.14
28Nov2012 - 08:21:00	66.34
28Nov2012 - 08:22:00	60.28
28Nov2012 - 08:23:00	50.02
28Nov2012 - 08:24:00	50.11
28Nov2012 - 08:25:00	64.68
28Nov2012 - 08:26:00	42.32
28Nov2012 - 08:27:00	35.27
28Nov2012 - 08:28:00	36.67

Washer 2 Exhaust Summaries

Time	Ave THC Conc	MW	(SCFM)	lb/hr
1000 - 1204	324.5	12	295	0.18
1237 - 1512	162.0	12	282	0.09
1710 - 1908	293.0	12	301	0.16
Daily Average	258.4	12	293	0.14

28Nov2012 - 08:29:00	50.47
28Nov2012 - 08:30:00	39.04
28Nov2012 - 08:31:00	47.13
28Nov2012 - 08:32:00	37.84
28Nov2012 - 08:33:00	59.02
28Nov2012 - 08:34:00	40.07
28Nov2012 - 08:35:00	44.57
28Nov2012 - 08:36:00	52.86
28Nov2012 - 08:37:00	49.53
28Nov2012 - 08:38:00	43.65
28Nov2012 - 08:39:00	46.1
28Nov2012 - 08:40:00	50.66
28Nov2012 - 08:41:00	45.99
28Nov2012 - 08:42:00	60.54
28Nov2012 - 08:43:00	52.96
28Nov2012 - 08:44:00	46.54
28Nov2012 - 08:45:00	30.55
28Nov2012 - 08:46:00	42.28
28Nov2012 - 08:47:00	40.6
28Nov2012 - 08:48:00	51.77
28Nov2012 - 08:49:00	36.63
28Nov2012 - 08:50:00	57.69
28Nov2012 - 08:51:00	45.2
28Nov2012 - 08:52:00	47.59
28Nov2012 - 08:53:00	61.88
28Nov2012 - 08:54:00	49.84
28Nov2012 - 08:55:00	30.6
28Nov2012 - 08:56:00	62.38
28Nov2012 - 08:57:00	48.81
28Nov2012 - 08:58:00	33.63
28Nov2012 - 08:59:00	38.93
28Nov2012 - 09:00:00	55.1
28Nov2012 - 09:01:00	42.98
28Nov2012 - 09:02:00	43.01
28Nov2012 - 09:03:00	45.35
28Nov2012 - 09:04:00	45.24
28Nov2012 - 09:05:00	47.91
28Nov2012 - 09:06:00	43.7
28Nov2012 - 09:07:00	56.25
28Nov2012 - 09:08:00	44.14
28Nov2012 - 09:09:00	47.58
28Nov2012 - 09:10:00	41.32
28Nov2012 - 09:11:00	24.88
28Nov2012 - 09:12:00	47.06
28Nov2012 - 09:13:00	41.08
28Nov2012 - 09:14:00	39.25
28Nov2012 - 09:15:00	61.65
28Nov2012 - 09:16:00	63.28
28Nov2012 - 09:17:00	41.68
28Nov2012 - 09:18:00	41.04
28Nov2012 - 09:19:00	33.67
28Nov2012 - 09:20:00	41.82
28Nov2012 - 09:21:00	54.73
28Nov2012 - 09:22:00	37.24
28Nov2012 - 09:23:00	53.56
28Nov2012 - 09:24:00	35.87
28Nov2012 - 09:25:00	43.82
28Nov2012 - 09:26:00	42.91
28Nov2012 - 09:27:00	43.42
28Nov2012 - 09:28:00	45.16
28Nov2012 - 09:29:00	56.41

28Nov2012 - 09:30:00	41.88
28Nov2012 - 09:31:00	53.83
28Nov2012 - 09:32:00	44.21
28Nov2012 - 09:33:00	51.16
28Nov2012 - 09:34:00	39.9
28Nov2012 - 09:35:00	36.55
28Nov2012 - 09:36:00	51.95
28Nov2012 - 09:37:00	37.25
28Nov2012 - 09:38:00	40.81
28Nov2012 - 09:39:00	43.41
28Nov2012 - 09:40:00	35.89
28Nov2012 - 09:41:00	48.17
28Nov2012 - 09:42:00	45.12
28Nov2012 - 09:43:00	34.37
28Nov2012 - 09:44:00	36.31
28Nov2012 - 09:45:00	42.77
28Nov2012 - 09:46:00	31.23
28Nov2012 - 09:47:00	39.63
28Nov2012 - 09:48:00	38.39
28Nov2012 - 09:49:00	40.31
28Nov2012 - 09:50:00	44.67
28Nov2012 - 09:51:00	44.79
28Nov2012 - 09:52:00	61.7
28Nov2012 - 09:53:00	47.07
28Nov2012 - 09:54:00	51.44
28Nov2012 - 09:55:00	53.69
28Nov2012 - 09:56:00	54.96
28Nov2012 - 09:57:00	73.65
28Nov2012 - 09:58:00	74.15
28Nov2012 - 09:59:00	63.71

START WASH LOAD 2 (WASHER 2)

28Nov2012 - 10:00:00	65.8
28Nov2012 - 10:01:00	151.68
28Nov2012 - 10:02:00	524.02
28Nov2012 - 10:03:00	119.61
28Nov2012 - 10:04:00	138.06
28Nov2012 - 10:05:00	396.68
28Nov2012 - 10:06:00	545
28Nov2012 - 10:07:00	431.14
28Nov2012 - 10:08:00	617.18
28Nov2012 - 10:09:00	595.92
28Nov2012 - 10:10:00	510.27
28Nov2012 - 10:11:00	729.23
28Nov2012 - 10:12:00	839.67
28Nov2012 - 10:13:00	988.14
28Nov2012 - 10:14:00	1264.74
28Nov2012 - 10:15:00	1215.88
28Nov2012 - 10:16:00	1508.51
28Nov2012 - 10:17:00	1963.08
28Nov2012 - 10:18:00	2446.78
28Nov2012 - 10:19:00	2708.26
28Nov2012 - 10:20:00	2733.82
28Nov2012 - 10:21:00	1710.53
28Nov2012 - 10:22:00	1422.35
28Nov2012 - 10:23:00	1054.56
28Nov2012 - 10:24:00	287.97
28Nov2012 - 10:25:00	253.96
28Nov2012 - 10:26:00	230.03
28Nov2012 - 10:27:00	208.24

28Nov2012 - 10:28:00	157.19
28Nov2012 - 10:29:00	181.66
28Nov2012 - 10:30:00	204.7
28Nov2012 - 10:31:00	158.78
28Nov2012 - 10:32:00	216.65
28Nov2012 - 10:33:00	212.8
28Nov2012 - 10:34:00	231.74
28Nov2012 - 10:35:00	233.31
28Nov2012 - 10:36:00	249.38
28Nov2012 - 10:37:00	181.75
28Nov2012 - 10:38:00	176.02
28Nov2012 - 10:39:00	216.93
28Nov2012 - 10:40:00	224.27
28Nov2012 - 10:41:00	218.82
28Nov2012 - 10:42:00	230.52
28Nov2012 - 10:43:00	207.55
28Nov2012 - 10:44:00	216.87
28Nov2012 - 10:45:00	215.85
28Nov2012 - 10:46:00	209.91
28Nov2012 - 10:47:00	213.85
28Nov2012 - 10:48:00	203.75
28Nov2012 - 10:49:00	228.74
28Nov2012 - 10:50:00	235.28
28Nov2012 - 10:51:00	206.05
28Nov2012 - 10:52:00	203.22
28Nov2012 - 10:53:00	218.88
28Nov2012 - 10:54:00	104.14
28Nov2012 - 10:55:00	100.35
28Nov2012 - 10:56:00	59.2
28Nov2012 - 10:57:00	82.53
28Nov2012 - 10:58:00	86.85
28Nov2012 - 10:59:00	88.8
28Nov2012 - 11:00:00	84.03
28Nov2012 - 11:01:00	38.43
28Nov2012 - 11:02:00	82.42
28Nov2012 - 11:03:00	105.03
28Nov2012 - 11:04:00	108.3
28Nov2012 - 11:05:00	116.52
28Nov2012 - 11:06:00	115.42
28Nov2012 - 11:07:00	111.8
28Nov2012 - 11:08:00	88.63
28Nov2012 - 11:09:00	91.65
28Nov2012 - 11:10:00	91.05
28Nov2012 - 11:11:00	102.15
28Nov2012 - 11:12:00	94.86
28Nov2012 - 11:13:00	99.53
28Nov2012 - 11:14:00	107.22
28Nov2012 - 11:15:00	119.82
28Nov2012 - 11:16:00	103.53
28Nov2012 - 11:17:00	29.48
28Nov2012 - 11:18:00	34.48
28Nov2012 - 11:19:00	124.81
28Nov2012 - 11:20:00	56.34
28Nov2012 - 11:21:00	109.1
28Nov2012 - 11:22:00	107.18
28Nov2012 - 11:23:00	94.82
28Nov2012 - 11:24:00	54.87
28Nov2012 - 11:25:00	26.46
28Nov2012 - 11:26:00	139.76
28Nov2012 - 11:27:00	124.67
28Nov2012 - 11:28:00	42.63

28Nov2012 - 11:29:00	17.09
28Nov2012 - 11:30:00	238.58
28Nov2012 - 11:31:00	157.77
28Nov2012 - 11:32:00	28.4
28Nov2012 - 11:33:00	24.83
28Nov2012 - 11:34:00	870.7
28Nov2012 - 11:35:00	1202.35
28Nov2012 - 11:36:00	544.35
28Nov2012 - 11:37:00	285.98
28Nov2012 - 11:38:00	286.48
28Nov2012 - 11:39:00	192.68
28Nov2012 - 11:40:00	194.76
28Nov2012 - 11:41:00	167.41
28Nov2012 - 11:42:00	158.16
28Nov2012 - 11:43:00	177.69
28Nov2012 - 11:44:00	40.16
28Nov2012 - 11:45:00	49.52
28Nov2012 - 11:46:00	217.31
28Nov2012 - 11:47:00	142.06
28Nov2012 - 11:48:00	38.87
28Nov2012 - 11:49:00	485.95
28Nov2012 - 11:50:00	292.92
28Nov2012 - 11:51:00	197.52
28Nov2012 - 11:52:00	26.76
28Nov2012 - 11:53:00	33.52
28Nov2012 - 11:54:00	63.43
28Nov2012 - 11:55:00	7.52
28Nov2012 - 11:56:00	9.72
28Nov2012 - 11:57:00	10.54
28Nov2012 - 11:58:00	13.9
28Nov2012 - 11:59:00	7.67
28Nov2012 - 12:00:00	19.22
28Nov2012 - 12:01:00	9.92
28Nov2012 - 12:02:00	38.74
28Nov2012 - 12:03:00	28.24
28Nov2012 - 12:04:00	38.11

END WASH LOAD 2 (WASHER 2)

AVERAGES	**324.5**
28Nov2012 - 12:05:00	46.34
28Nov2012 - 12:06:00	61.2
28Nov2012 - 12:07:00	68.22
28Nov2012 - 12:08:00	73.96
28Nov2012 - 12:09:00	84.74
28Nov2012 - 12:10:00	118.33
28Nov2012 - 12:11:00	127.38
28Nov2012 - 12:12:00	100.24
28Nov2012 - 12:13:00	92.02
28Nov2012 - 12:14:00	87.47
28Nov2012 - 12:15:00	94.45
28Nov2012 - 12:16:00	50.38
28Nov2012 - 12:17:00	74.03
28Nov2012 - 12:18:00	84.68
28Nov2012 - 12:19:00	101.2
28Nov2012 - 12:20:00	103.29
28Nov2012 - 12:21:00	86.46
28Nov2012 - 12:22:00	77.82
28Nov2012 - 12:23:00	74.63
28Nov2012 - 12:24:00	126.42
28Nov2012 - 12:25:00	119.82

28Nov2012 - 12:26:00	75.57	
28Nov2012 - 12:27:00	82.01	
28Nov2012 - 12:28:00	91.33	
28Nov2012 - 12:29:00	82.79	
28Nov2012 - 12:30:00	101.77	
28Nov2012 - 12:31:00	110.06	
28Nov2012 - 12:32:00	97.79	
28Nov2012 - 12:33:00	109.95	
28Nov2012 - 12:34:00	92.56	
28Nov2012 - 12:35:00	110.28	
28Nov2012 - 12:36:00	303.76	
28Nov2012 - 12:37:00	2915.47	
28Nov2012 - 12:38:00	2909.36	
28Nov2012 - 12:39:00	2910.79	SPAN
28Nov2012 - 12:40:00	296.2	
28Nov2012 - 12:41:00	9.34	
28Nov2012 - 12:42:00	5.37	ZERO
28Nov2012 - 12:43:00	47.67	
28Nov2012 - 12:44:00	62.34	
28Nov2012 - 12:45:00	74.36	
28Nov2012 - 12:46:00	102.1	
28Nov2012 - 12:47:00	104.16	
28Nov2012 - 12:48:00	98.14	
28Nov2012 - 12:49:00	103.15	
28Nov2012 - 12:50:00	98.8	
28Nov2012 - 12:51:00	108.63	
28Nov2012 - 12:52:00	77.24	
28Nov2012 - 12:53:00	81.29	
28Nov2012 - 12:54:00	85.07	
28Nov2012 - 12:55:00	70.83	
28Nov2012 - 12:56:00	71.23	
28Nov2012 - 12:57:00	71.68	
28Nov2012 - 12:58:00	74.59	
28Nov2012 - 12:59:00	76.91	
28Nov2012 - 13:00:00	73.62	
28Nov2012 - 13:01:00	78.27	
28Nov2012 - 13:02:00	62.54	
28Nov2012 - 13:03:00	62.92	
28Nov2012 - 13:04:00	48.32	

START WASH LOAD 4 (WASHER 2)

28Nov2012 - 13:05:00	71.31
28Nov2012 - 13:06:00	234.74
28Nov2012 - 13:07:00	474.27
28Nov2012 - 13:08:00	479.22
28Nov2012 - 13:09:00	364.19
28Nov2012 - 13:10:00	227.27
28Nov2012 - 13:11:00	206.67
28Nov2012 - 13:12:00	198.52
28Nov2012 - 13:13:00	177.94
28Nov2012 - 13:14:00	211.69
28Nov2012 - 13:15:00	225.61
28Nov2012 - 13:16:00	397.39
28Nov2012 - 13:17:00	653.88
28Nov2012 - 13:18:00	354.52
28Nov2012 - 13:19:00	394.89
28Nov2012 - 13:20:00	464.3
28Nov2012 - 13:21:00	534.51
28Nov2012 - 13:22:00	632.17
28Nov2012 - 13:23:00	756.1

28Nov2012 - 13:24:00	876.98
28Nov2012 - 13:25:00	1042.57
28Nov2012 - 13:26:00	857.67
28Nov2012 - 13:27:00	284.89
28Nov2012 - 13:28:00	272.03
28Nov2012 - 13:29:00	179.51
28Nov2012 - 13:30:00	146.19
28Nov2012 - 13:31:00	165.62
28Nov2012 - 13:32:00	143.32
28Nov2012 - 13:33:00	126.27
28Nov2012 - 13:34:00	121.81
28Nov2012 - 13:35:00	127.88
28Nov2012 - 13:36:00	123.11
28Nov2012 - 13:37:00	118.99
28Nov2012 - 13:38:00	101.02
28Nov2012 - 13:39:00	117.8
28Nov2012 - 13:40:00	114.84
28Nov2012 - 13:41:00	101.63
28Nov2012 - 13:42:00	105.31
28Nov2012 - 13:43:00	117.16
28Nov2012 - 13:44:00	98.26
28Nov2012 - 13:45:00	90.37
28Nov2012 - 13:46:00	89.8
28Nov2012 - 13:47:00	93.11
28Nov2012 - 13:48:00	97.46
28Nov2012 - 13:49:00	116.38
28Nov2012 - 13:50:00	128.53
28Nov2012 - 13:51:00	112.94
28Nov2012 - 13:52:00	114.46
28Nov2012 - 13:53:00	101.75
28Nov2012 - 13:54:00	92.95
28Nov2012 - 13:55:00	115.21
28Nov2012 - 13:56:00	118.34
28Nov2012 - 13:57:00	106.11
28Nov2012 - 13:58:00	79.73
28Nov2012 - 13:59:00	95.45
28Nov2012 - 14:00:00	69.94
28Nov2012 - 14:01:00	67.24
28Nov2012 - 14:02:00	66.02
28Nov2012 - 14:03:00	63.33
28Nov2012 - 14:04:00	67.73
28Nov2012 - 14:05:00	35.05
28Nov2012 - 14:06:00	73.14
28Nov2012 - 14:07:00	67.15
28Nov2012 - 14:08:00	81.46
28Nov2012 - 14:09:00	78.47
28Nov2012 - 14:10:00	95.53
28Nov2012 - 14:11:00	94.08
28Nov2012 - 14:12:00	80.56
28Nov2012 - 14:13:00	84.02
28Nov2012 - 14:14:00	83.9
28Nov2012 - 14:15:00	85.89
28Nov2012 - 14:16:00	123.95
28Nov2012 - 14:17:00	148.43
28Nov2012 - 14:18:00	114.94
28Nov2012 - 14:19:00	89.21
28Nov2012 - 14:20:00	85.67
28Nov2012 - 14:21:00	37.48
28Nov2012 - 14:22:00	68.18
28Nov2012 - 14:23:00	61.87
28Nov2012 - 14:24:00	66.13

28Nov2012 - 14:25:00	76.9
28Nov2012 - 14:26:00	57.2
28Nov2012 - 14:27:00	67.32
28Nov2012 - 14:28:00	30.77
28Nov2012 - 14:29:00	78.51
28Nov2012 - 14:30:00	169.42
28Nov2012 - 14:31:00	93.99
28Nov2012 - 14:32:00	38.83
28Nov2012 - 14:33:00	153.27
28Nov2012 - 14:34:00	135.09
28Nov2012 - 14:35:00	25.38
28Nov2012 - 14:36:00	27.39
28Nov2012 - 14:37:00	50.25
28Nov2012 - 14:38:00	104.26
28Nov2012 - 14:39:00	129.83
28Nov2012 - 14:40:00	137.53
28Nov2012 - 14:41:00	102.06
28Nov2012 - 14:42:00	238.35
28Nov2012 - 14:43:00	64.95
28Nov2012 - 14:44:00	490.54
28Nov2012 - 14:45:00	323.08
28Nov2012 - 14:46:00	277.88
28Nov2012 - 14:47:00	195.08
28Nov2012 - 14:48:00	120.74
28Nov2012 - 14:49:00	84.26
28Nov2012 - 14:50:00	105.62
28Nov2012 - 14:51:00	83.65
28Nov2012 - 14:52:00	89.45
28Nov2012 - 14:53:00	34.31
28Nov2012 - 14:54:00	102.27
28Nov2012 - 14:55:00	162.76
28Nov2012 - 14:56:00	65.32
28Nov2012 - 14:57:00	194.91
28Nov2012 - 14:58:00	198.33
28Nov2012 - 14:59:00	143.36
28Nov2012 - 15:00:00	40.35
28Nov2012 - 15:01:00	25.1
28Nov2012 - 15:02:00	51.58
28Nov2012 - 15:03:00	14.25
28Nov2012 - 15:04:00	16.09
28Nov2012 - 15:05:00	6.06
28Nov2012 - 15:06:00	17.57
28Nov2012 - 15:07:00	19.15
28Nov2012 - 15:08:00	18.7
28Nov2012 - 15:09:00	-0.62
28Nov2012 - 15:10:00	37.52
28Nov2012 - 15:11:00	49.36
28Nov2012 - 15:12:00	39.46
END WASH LOAD 4 (W/	**162.0**
AVERAGES	
28Nov2012 - 15:13:00	60.29
28Nov2012 - 15:14:00	60.58
28Nov2012 - 15:15:00	83.03
28Nov2012 - 15:16:00	94.26
28Nov2012 - 15:17:00	90.32
28Nov2012 - 15:18:00	34.59
28Nov2012 - 15:19:00	35.73
28Nov2012 - 15:20:00	15.44
28Nov2012 - 15:21:00	28.99

28Nov2012 - 15:22:00	38.79
28Nov2012 - 15:23:00	59.36
28Nov2012 - 15:24:00	69.68
28Nov2012 - 15:25:00	37.34
28Nov2012 - 15:26:00	34.01
28Nov2012 - 15:27:00	36.55
28Nov2012 - 15:28:00	78.09
28Nov2012 - 15:29:00	59.73
28Nov2012 - 15:30:00	71.23
28Nov2012 - 15:31:00	75.14
28Nov2012 - 15:32:00	73.92
28Nov2012 - 15:33:00	70.4
28Nov2012 - 15:34:00	81.92
28Nov2012 - 15:35:00	83.94
28Nov2012 - 15:36:00	85.93
28Nov2012 - 15:37:00	103.95
28Nov2012 - 15:38:00	90.52
28Nov2012 - 15:39:00	87
28Nov2012 - 15:40:00	69.44
28Nov2012 - 15:41:00	78.96
28Nov2012 - 15:42:00	58.77
28Nov2012 - 15:43:00	59.26
28Nov2012 - 15:44:00	62.69
28Nov2012 - 15:45:00	84.62
28Nov2012 - 15:46:00	60.65
28Nov2012 - 15:47:00	52.31
28Nov2012 - 15:48:00	67.29
28Nov2012 - 15:49:00	61.66
28Nov2012 - 15:50:00	60.65
28Nov2012 - 15:51:00	65.21
28Nov2012 - 15:52:00	47.45
28Nov2012 - 15:53:00	62.71
28Nov2012 - 15:54:00	51.44
28Nov2012 - 15:55:00	50.07
28Nov2012 - 15:56:00	53.04
28Nov2012 - 15:57:00	47.84
28Nov2012 - 15:58:00	58.57
28Nov2012 - 15:59:00	85.03
28Nov2012 - 16:00:00	98.3
28Nov2012 - 16:01:00	94.67
28Nov2012 - 16:02:00	77.04
28Nov2012 - 16:03:00	101.44
28Nov2012 - 16:04:00	86.83
28Nov2012 - 16:05:00	83.02
28Nov2012 - 16:06:00	75.52
28Nov2012 - 16:07:00	53.56
28Nov2012 - 16:08:00	64.8
28Nov2012 - 16:09:00	45.2
28Nov2012 - 16:10:00	60.61
28Nov2012 - 16:11:00	66.86
28Nov2012 - 16:12:00	66.42
28Nov2012 - 16:13:00	67.37
28Nov2012 - 16:14:00	54.48
28Nov2012 - 16:15:00	69.78
28Nov2012 - 16:16:00	58.65
28Nov2012 - 16:17:00	71.98
28Nov2012 - 16:18:00	68.81
28Nov2012 - 16:19:00	48.09
28Nov2012 - 16:20:00	49.36
28Nov2012 - 16:21:00	54.1
28Nov2012 - 16:22:00	49.47

28Nov2012 - 16:23:00	60.49
28Nov2012 - 16:24:00	56.86
28Nov2012 - 16:25:00	70.27
28Nov2012 - 16:26:00	58.17
28Nov2012 - 16:27:00	68.52
28Nov2012 - 16:28:00	63.12
28Nov2012 - 16:29:00	60.92
28Nov2012 - 16:30:00	58.39
28Nov2012 - 16:31:00	58.71
28Nov2012 - 16:32:00	69.71
28Nov2012 - 16:33:00	57.94
28Nov2012 - 16:34:00	58.91
28Nov2012 - 16:35:00	67.79
28Nov2012 - 16:36:00	50.62
28Nov2012 - 16:37:00	49.33
28Nov2012 - 16:38:00	45.83
28Nov2012 - 16:39:00	57.92
28Nov2012 - 16:40:00	52.31
28Nov2012 - 16:41:00	63.28
28Nov2012 - 16:42:00	59.78
28Nov2012 - 16:43:00	96.98
28Nov2012 - 16:44:00	99.45
28Nov2012 - 16:45:00	95.45
28Nov2012 - 16:46:00	86.22
28Nov2012 - 16:47:00	79.99
28Nov2012 - 16:48:00	75.28
28Nov2012 - 16:49:00	95.41
28Nov2012 - 16:50:00	99.32
28Nov2012 - 16:51:00	77.43
28Nov2012 - 16:52:00	93.12
28Nov2012 - 16:53:00	93.96
28Nov2012 - 16:54:00	97.48
28Nov2012 - 16:55:00	87.03
28Nov2012 - 16:56:00	98.8
28Nov2012 - 16:57:00	92.65
28Nov2012 - 16:58:00	84.42
28Nov2012 - 16:59:00	81.36
28Nov2012 - 17:00:00	62.79
28Nov2012 - 17:01:00	51.25
28Nov2012 - 17:02:00	64.54
28Nov2012 - 17:03:00	60.59
28Nov2012 - 17:04:00	66.05
28Nov2012 - 17:05:00	79.05
28Nov2012 - 17:06:00	63.94
28Nov2012 - 17:07:00	71.8
28Nov2012 - 17:08:00	81.24
28Nov2012 - 17:09:00	243.53

START WASH LOAD 6 (WASHER 2)

28Nov2012 - 17:10:00	593.98
28Nov2012 - 17:11:00	667.46
28Nov2012 - 17:12:00	518.26
28Nov2012 - 17:13:00	343.95
28Nov2012 - 17:14:00	307.91
28Nov2012 - 17:15:00	356.6
28Nov2012 - 17:16:00	447.3
28Nov2012 - 17:17:00	424.64
28Nov2012 - 17:18:00	553.72
28Nov2012 - 17:19:00	642.45
28Nov2012 - 17:20:00	825.45

28Nov2012 - 17:21:00	940.4
28Nov2012 - 17:22:00	950.33
28Nov2012 - 17:23:00	1232.1
28Nov2012 - 17:24:00	1478.96
28Nov2012 - 17:25:00	1651.52
28Nov2012 - 17:26:00	1860.52
28Nov2012 - 17:27:00	2324.46
28Nov2012 - 17:28:00	1682.24
28Nov2012 - 17:29:00	687.34
28Nov2012 - 17:30:00	259.36
28Nov2012 - 17:31:00	233.94
28Nov2012 - 17:32:00	227.95
28Nov2012 - 17:33:00	193.68
28Nov2012 - 17:34:00	187.7
28Nov2012 - 17:35:00	167.95
28Nov2012 - 17:36:00	174.83
28Nov2012 - 17:37:00	184.74
28Nov2012 - 17:38:00	164.28
28Nov2012 - 17:39:00	176.29
28Nov2012 - 17:40:00	193.1
28Nov2012 - 17:41:00	205.41
28Nov2012 - 17:42:00	188.86
28Nov2012 - 17:43:00	188.99
28Nov2012 - 17:44:00	184.8
28Nov2012 - 17:45:00	193.14
28Nov2012 - 17:46:00	187.13
28Nov2012 - 17:47:00	200.87
28Nov2012 - 17:48:00	185.44
28Nov2012 - 17:49:00	209.22
28Nov2012 - 17:50:00	184.92
28Nov2012 - 17:51:00	197.05
28Nov2012 - 17:52:00	187.62
28Nov2012 - 17:53:00	196.58
28Nov2012 - 17:54:00	205.41
28Nov2012 - 17:55:00	192.51
28Nov2012 - 17:56:00	215.64
28Nov2012 - 17:57:00	185.03
28Nov2012 - 17:58:00	187.37
28Nov2012 - 17:59:00	184.21
28Nov2012 - 18:00:00	142
28Nov2012 - 18:01:00	138.47
28Nov2012 - 18:02:00	114.14
28Nov2012 - 18:03:00	103.54
28Nov2012 - 18:04:00	97.85
28Nov2012 - 18:05:00	100.31
28Nov2012 - 18:06:00	101.5
28Nov2012 - 18:07:00	84.71
28Nov2012 - 18:08:00	44.5
28Nov2012 - 18:09:00	107.67
28Nov2012 - 18:10:00	95.42
28Nov2012 - 18:11:00	96.66
28Nov2012 - 18:12:00	105.16
28Nov2012 - 18:13:00	127.42
28Nov2012 - 18:14:00	130.54
28Nov2012 - 18:15:00	98.61
28Nov2012 - 18:16:00	101.66
28Nov2012 - 18:17:00	127.27
28Nov2012 - 18:18:00	131.39
28Nov2012 - 18:19:00	107.23
28Nov2012 - 18:20:00	125.64
28Nov2012 - 18:21:00	135.98

28Nov2012 - 18:22:00	118.35
28Nov2012 - 18:23:00	91.29
28Nov2012 - 18:24:00	19.01
28Nov2012 - 18:25:00	100.44
28Nov2012 - 18:26:00	132.52
28Nov2012 - 18:27:00	103.53
28Nov2012 - 18:28:00	111.88
28Nov2012 - 18:29:00	82
28Nov2012 - 18:30:00	6.56
28Nov2012 - 18:31:00	412.07
28Nov2012 - 18:32:00	240.78
28Nov2012 - 18:33:00	46.43
28Nov2012 - 18:34:00	188.15
28Nov2012 - 18:35:00	333.59
28Nov2012 - 18:36:00	62.24
28Nov2012 - 18:37:00	36.1
28Nov2012 - 18:38:00	75.14
28Nov2012 - 18:39:00	167.22
28Nov2012 - 18:40:00	655.03
28Nov2012 - 18:41:00	1298.6
28Nov2012 - 18:42:00	727.87
28Nov2012 - 18:43:00	292.81
28Nov2012 - 18:44:00	191.82
28Nov2012 - 18:45:00	185.11
28Nov2012 - 18:46:00	193.86
28Nov2012 - 18:47:00	146.55
28Nov2012 - 18:48:00	105.36
28Nov2012 - 18:49:00	102.65
28Nov2012 - 18:50:00	156.89
28Nov2012 - 18:51:00	189.96
28Nov2012 - 18:52:00	179.02
28Nov2012 - 18:53:00	405.65
28Nov2012 - 18:54:00	230.51
28Nov2012 - 18:55:00	33.26
28Nov2012 - 18:56:00	31.56
28Nov2012 - 18:57:00	68.35
28Nov2012 - 18:58:00	19.06
28Nov2012 - 18:59:00	18.91
28Nov2012 - 19:00:00	27.58
28Nov2012 - 19:01:00	25.91
28Nov2012 - 19:02:00	8.41
28Nov2012 - 19:03:00	21.58
28Nov2012 - 19:04:00	8.92
28Nov2012 - 19:05:00	52.59
28Nov2012 - 19:06:00	54.79
28Nov2012 - 19:07:00	62.57
END WASH LOAD 6	
AVERAGES	**293.0**
DAILY AVERAGE	**258.4**
28Nov2012 - 19:08:00	66.09
28Nov2012 - 19:09:00	67.77
28Nov2012 - 19:10:00	102.53
28Nov2012 - 19:11:00	105.06
28Nov2012 - 19:12:00	101.85
28Nov2012 - 19:13:00	106.15
28Nov2012 - 19:14:00	102.48
28Nov2012 - 19:15:00	123.32
28Nov2012 - 19:16:00	118.25

28Nov2012 - 19:17:00	95.75	
28Nov2012 - 19:18:00	126.3	
28Nov2012 - 19:19:00	126.94	
28Nov2012 - 19:20:00	106.35	
28Nov2012 - 19:21:00	108.76	
28Nov2012 - 19:22:00	113.62	
28Nov2012 - 19:23:00	114.9	
28Nov2012 - 19:24:00	2354.85	
28Nov2012 - 19:25:00	2928.61	SPAN
28Nov2012 - 19:26:00	2924.91	
28Nov2012 - 19:27:00	2887.24	
28Nov2012 - 19:28:00	98.52	
28Nov2012 - 19:29:00	3.34	
28Nov2012 - 19:30:00	2.43	ZERO
28Nov2012 - 19:31:00	80.65	
28Nov2012 - 19:32:00	127.45	
28Nov2012 - 19:33:00	136.41	
28Nov2012 - 19:34:00	108.81	
28Nov2012 - 19:35:00	115.77	
28Nov2012 - 19:36:00	130.57	
28Nov2012 - 19:37:00	118.94	
28Nov2012 - 19:38:00	119.2	
28Nov2012 - 19:39:00	107.46	
28Nov2012 - 19:40:00	106.8	
28Nov2012 - 19:41:00	101.88	
28Nov2012 - 19:42:00	123.74	
28Nov2012 - 19:43:00	127.41	
28Nov2012 - 19:44:00	119.25	
28Nov2012 - 19:45:00	121.98	
28Nov2012 - 19:46:00	99.23	
28Nov2012 - 19:47:00	91.26	
28Nov2012 - 19:48:00	106.22	
28Nov2012 - 19:49:00	96.71	
28Nov2012 - 19:50:00	97.48	
28Nov2012 - 19:51:00	114.95	
28Nov2012 - 19:52:00	101.07	
28Nov2012 - 19:53:00	105.74	
28Nov2012 - 19:54:00	110.82	
28Nov2012 - 19:55:00	89.73	
28Nov2012 - 19:56:00	120	
28Nov2012 - 19:57:00	116.84	
28Nov2012 - 19:58:00	95.34	
28Nov2012 - 19:59:00	97.79	
28Nov2012 - 20:00:00	101.31	
28Nov2012 - 20:01:00	123.7	
28Nov2012 - 20:02:00	114.36	
28Nov2012 - 20:03:00	96.88	
28Nov2012 - 20:04:00	92	
28Nov2012 - 20:05:00	102.97	
28Nov2012 - 20:06:00	98.67	
28Nov2012 - 20:07:00	102.12	
28Nov2012 - 20:08:00	100.34	
28Nov2012 - 20:09:00	105.48	
28Nov2012 - 20:10:00	114.5	
28Nov2012 - 20:11:00	80.97	
28Nov2012 - 20:12:00	82.93	
28Nov2012 - 20:13:00	100.88	
28Nov2012 - 20:14:00	84.71	
28Nov2012 - 20:15:00	96.4	
28Nov2012 - 20:16:00	82.68	
28Nov2012 - 20:17:00	95.55	

28Nov2012 - 20:18:00	89.4
28Nov2012 - 20:19:00	114.38
28Nov2012 - 20:20:00	117.71
28Nov2012 - 20:21:00	122.2
28Nov2012 - 20:22:00	127
28Nov2012 - 20:23:00	116.55
28Nov2012 - 20:24:00	121.4
28Nov2012 - 20:25:00	118.72
28Nov2012 - 20:26:00	119.01
28Nov2012 - 20:27:00	70.54
28Nov2012 - 20:28:00	84.58
28Nov2012 - 20:29:00	89.19
28Nov2012 - 20:30:00	97.31
28Nov2012 - 20:31:00	83.05
28Nov2012 - 20:32:00	97.32
28Nov2012 - 20:33:00	100.78
28Nov2012 - 20:34:00	105.43
28Nov2012 - 20:35:00	99.66
28Nov2012 - 20:36:00	110.4
28Nov2012 - 20:37:00	78.62
28Nov2012 - 20:38:00	94.37
28Nov2012 - 20:39:00	88.27
28Nov2012 - 20:40:00	87.65
28Nov2012 - 20:41:00	85.79
28Nov2012 - 20:42:00	94.58
28Nov2012 - 20:43:00	96.49
28Nov2012 - 20:44:00	97.17
28Nov2012 - 20:45:00	77.49
28Nov2012 - 20:46:00	81.65
28Nov2012 - 20:47:00	77.89
28Nov2012 - 20:48:00	97.75
28Nov2012 - 20:49:00	81.5
28Nov2012 - 20:50:00	100.28
28Nov2012 - 20:51:00	88.66
28Nov2012 - 20:52:00	81.63
28Nov2012 - 20:53:00	103.7
28Nov2012 - 20:54:00	95.82
28Nov2012 - 20:55:00	89.51
28Nov2012 - 20:56:00	90.39
28Nov2012 - 20:57:00	94.89
28Nov2012 - 20:58:00	94.78
28Nov2012 - 20:59:00	85.75
28Nov2012 - 21:00:00	87.05
28Nov2012 - 21:01:00	107.43
28Nov2012 - 21:02:00	107.35
28Nov2012 - 21:03:00	117.26
28Nov2012 - 21:04:00	127.66
28Nov2012 - 21:05:00	145.35
28Nov2012 - 21:06:00	178.06
28Nov2012 - 21:07:00	427.5
28Nov2012 - 21:08:00	631.26
28Nov2012 - 21:09:00	1552.37
28Nov2012 - 21:10:00	2474.63
28Nov2012 - 21:11:00	3233.89
28Nov2012 - 21:12:00	8037.75
28Nov2012 - 21:13:00	4457.11
28Nov2012 - 21:13:56	

Ellis Washer # 2 - Shop Towels With Strip
G&K Services
Methods 1-4 Summary

Run No.	W2 - ST - 1	W2 - ST - 2	W2 - ST -3	
Date:	28-Nov-12	28-Nov-12	28-Nov-12	
Start Time	10:00	12:37	17:10	
Stop Time	12:04	15:12	19:08	AVERAGES
Barometric Pressure, (inches of mercury)	29.88	29.88	29.88	29.88
Net Sampling Time, (minutes)	124	155	118	132.3
Wet Bulb Temp., (F)	34	39	39	37
Dry Bulb Temp., (F)	35	43	42	40
Calculated Saturation Constant	0.00657	0.00801	0.00801	0.0075
Moisture, (percent)	0.6	0.7	0.7	0.7
Dry Mole Fraction	0.9937	0.9934	0.9930	0.9934
CO_2 Concentration, (percent dry)	0.0	0.0	0.0	0.0
O_2 Concentration, (percent dry)	20.9	20.9	20.9	20.9
CO and N_2, (percent dry)	79.1	79.1	79.1	79.1
Dry Molecular Weight, (lb/lb mole)	28.84	28.84	28.84	28.84
Wet Molecular Weight, (lb/lb mole)	28.77	28.76	28.76	28.76
Excess Air at Stack, (percent)	-118750.0	-118750.0	-118750.0	-118750.0
Stack Area, (square inches)	28.3	28.3	28.3	28.3
Static Pressure, (inches of water)	-1.30	-1.30	-1.20	-1.27
Stack Pressure, (inches of mercury)	29.78	29.78	29.79	29.79
Average Stack Temperature, (°F)	35	43	42	40
Average Sqroot of ΔP	0.4319	0.4162	0.4433	0.4305
SDE Average	9.608	9.333	9.930	9.623
Pitot Coefficient	0.84	0.84	0.84	0.84
Stack Gas Velocity, (actual feet per minute - afpm)	1,414	1,374	1,462	1,417
Stack Flowrate, (actual cubic feet per minute - acfm)	278	270	287	278
Stack Flowrate, (standard cubic feet per minute - scfm)	295	282	301	293
Stack Flowrate, (dry standard cubic feet per minute - dscfm)	293	280	299	291

Method 2 Data Sheet

Washer 2
1

Plant	GTK	Date	11-28-2012
Location	Washer ~~X~~ 2 TCP	Time	10:02

Stack Diameter	6	"	Area, A		ft^2
Barometric Pressure, P_b	29.88	"Hg	Meter Temp.		°F
% Moisture		$\%H_2O$	Stack O_2		%
Static Pressure, P_g	-1.3	$"H_2O$	Stack CO_2		%
Pitot Coefficient, C_p	.84		MW (wet)		lb/lb-mole

Port	Point	ΔP	$\sqrt{\Delta P}$	T_S (°F)	+ θ clockwise - θ counter-clockwise	$\sqrt{\Delta P}\cos\theta$	
A	1	.18		35			
	2	.19		35			
	3	.18		34			
	4	.18		35			
	5	.19		35			
	6	.17		35			
B	1	.21		34			
	2	.20		35			
	3	.19		35			
	4	.19		35			
	5	.19		35			
	6	.17		35			
		wet bulb		35			
	Average						

Average Absolute Temp. _____

Absolute Gas Temperature, $T_{ST} = T_S + 460°$

Absolute Gas Pressure, $P_S = P_b + P_g/13.6$ _____ "Hg

Gas Velocity, $V_s = (85.49)\ C_p\ \sqrt{\Delta P}\,avg\ \sqrt{\dfrac{T_{ST}\,avg}{P_S\ M_W}}$ _____ ft/sec

Actual Gas Flowrate, $Q_a = (V_s)\ (60)\ (A)$ _____ ACFM

Standard Gas Flowrate, $Q_{std} = \left[\dfrac{528°R}{T_{ST}}\right]\left[\dfrac{P_S}{29.92}\right]\left[\dfrac{100 - \%H_2O}{100}\right]Q_a$ _____ DSCFM

Method 2 Data Sheet

Washer 2
2

Plant	GTK	Date	11 28 2012
Location	Washer 2	Time	13:09

Stack Diameter	6	"	Area, A		ft^2
Barometric Pressure, P_b	29.88	"Hg	Meter Temp.		°F
% Moisture		$\%H_2O$	Stack O_2		%
Static Pressure, P_g	-1.3	$"H_2O$	Stack CO_2		%
Pitot Coefficient, C_p	.84		MW (wet)		lb/lb-mole

Port	Point	ΔP	$\sqrt{\Delta P}$	T_s (°F)	+ θ clockwise - θ counter-clockwise	$\sqrt{\Delta P}\cos\theta$	
A	1	.18		43			
	2	.18		43			
	3	.16		43			
	4	.17		43			
	5	.19		42			
	6	.18		42			
B	1	.16		43			
	2	.16		43			
	3	.17		43			
	4	.18		43			
	5	.18		43			
	6	.17		43			
	Average						

wetbulb 59

Average Absolute Temp.

Absolute Gas Temperature, $T_{ST} = T_S + 460°$

Absolute Gas Pressure, $P_S = P_b + P_g/13.6$ "Hg

Gas Velocity, $V_s = (85.49)\ C_p \sqrt{\Delta P}_{avg} \sqrt{\frac{T_{ST}\ avg}{P_S\ M_W}}$ ft/sec

Actual Gas Flowrate, $Q_a = (V_s)\ (60)\ (A)$ ACFM

Standard Gas Flowrate, $Q_{std} = \left[\frac{528°R}{T_{ST}}\right]\left[\frac{P_S}{29.92}\right]\left[\frac{100 - \%H_2O}{100}\right] Q_a$ DSCFM

Method 2 Data Sheet

washer 2
3

Plant	G+K	Date	11-28-2012
Location	washer 2	Time	17:15

Stack Diameter	6	"	Area, A	ft^2
Barometric Pressure, P_b	29.88	"Hg	Meter Temp.	°F
% Moisture		%H_2O	Stack O_2	%
Static Pressure, P_g	-1.2	"H_2O	Stack CO_2	%
Pitot Coefficient, C_p	.84		MW (wet)	lb/lb-mole

Port	Point	ΔP	$\sqrt{\Delta P}$	T_S (°F)	+ θ clockwise - θ counter-clockwise	$\sqrt{\Delta P}\cos\theta$	
A	1	.21		41			
	2	.20		40			
	3	.14		42			
	4	.18		44			
	5	.21		45			
	6	.21		43			
B	1	.18		44			
	2	.20		41			
	3	.20		39			
	4	.19		40			
	5	.19		41			
	6	.20		41			
		wet bulb 39°					
	Average						

Average Absolute Temp. _____

Absolute Gas Temperature, $T_{ST} = T_S + 460°$

Absolute Gas Pressure, $P_S = P_b + P_g/13.6$ _____ "Hg

Gas Velocity, $V_s = (85.49)\ C_p \sqrt{\Delta P}_{avg} \sqrt{\frac{T_{ST}\ avg}{P_S\ M_W}}$ _____ ft/sec

Actual Gas Flowrate, $Q_a = (V_s)\ (60)\ (A)$ _____ ACFM

Standard Gas Flowrate, $Q_{std} = \left[\frac{528°R}{T_{ST}}\right]\left[\frac{P_S}{29.92}\right]\left[\frac{100 - \%H_2O}{100}\right]Q_a$ _____ DSCFM

Shop towels w/ strip

EVACUATED CANISTER SAMPLING FORM

Client: G+K	Run Number: TO-15-Washer2-1
Location: Washer #2	Operator: EG SB
Process:	Sample ID:
Canister Number: 001616/SC00922	Flow Controller ID: FCS00006
Canister Leak Check Date: 11/28/12	Comments:

	Canister Vacuum		Barometric Pressure (mmHg)	Ambient Temperature (~~°C~~) °F
	Manometer (mmHg)	Gauge (inHg)		
Pre-test		30.01	29.88	36°
		13.67	29.88	34

Pretest Leak Rate	mmHg/10 minutes
	0.0

Elapsed Time	Clock Time	Gauge Vacuum (inHg)	~~Flow Meter Setting (ml/min)~~ 8hr	Comments
0	10:00	30.0		
60	11:00	27.5		
125/0	12:05/13:05	24.0		
60	14:05	22		
127/0	15:12/17:10	19		
60	18:10	16.5		
End	19:08	14.5		

TRC

Print Towels

CEM CALIBRATION DATA
EPA Method 25A

Firm:	G&K	Analyzer:	California Analytical
Location:	Manchester, NH	Span Value (S):	8936
Operator	W Deveau	Analyzer Range:	30000
Sample Location:	washer 2		
Date:	29-Nov-12		

TOTAL HYDROCARBONS

PRE-TEST Calibration Error Check:

	Cylinder ID	Cylinder Gas Conc. (Ca)	Analyzer Response (C)	Slope (m)	Predicted Response (pr)	Calibration Error (<5%) (ce)
Zero, C_O		0.0	0.31			
C_{low} (25-35% span)	xc0033311b	2922.0	2922.1	1.0000	2922.1	0.0%
C_{mid} (45-55% span)	cc349917	4940.0	4941.2	1.0000	4940.2	0.0%
C_{high} (80-90% span)	cc351430	8936.0	8936.7	1.0000	8936.4	0.0%

Calibration Drift Check:

Run No:		1	2	3	4	AVG
Time						
Initial Zero	C_{OI}	0.3				
Initial Span	C_{MI}	2922.1				
Final Zero	C_{OF}	4.7				
Final Span	C_{MF}	2918.7				
Calibration Drift (< 3%)	CD_O	0.0%		0.0%	0.0%	
Calibration Drift (< 3%)	CD_M	0.0%				
THC Conc. (ppm, wet)	C_{THCavg}					

Nomenclature

C_{high}	Span gas analyzer response
C_O	Zero gas analyzer response
C_a	Cylinder gas value
C_{OI}	Initial calibration zero response
C_{OF}	Final calibration zero response
C_{MI}	Initial calibration upscale response
C_{MF}	Final calibration upscale response
CDo	Zero calibration drift
CDm	Upscale calibration drift
m	Slope
pr	Predicted response
ce	Calibration error
C	Analyzer response
S	Span
C_{NMHC}	Non-methane hydrocarbon concentration
C_{THC}	Total hydrocarbon concentration
C_{CH4}	Methane concentration

Calculations

$$m = (C_{high} - C_O) / C_a$$

$$pr = m \times C_a$$

$$ce = (C - pr) / C_a \times 100$$

$$CD_O = (C_{OI} - C_{OF}) / S$$

$$C_{NMHC} = C_{THC} - C_{CH4}$$

$$ER = C_{avg} \quad MW \quad 2.5962e\text{-}9 \quad Q \quad 60$$

where,

MW = molecular weight of methane, 16.04
2.5962e-9 = conversion from ppm to pounds per standard cubic feet.
60 = conversion from minutes to hour
Q = flow in units of standard cubic feet per minute

h:\stack\connecticut\projects\2012\g&k - manchester, nh\compliance testing\field data\nov 29 - print towels\[g&k - washer no. 2 emissions - print towels - 11-29-2012.xls]calibrations 12/13/112 13:05

Cylinder Gas	THC (ppm) Washer2
Zero ID	
Zero Expiration	
Low ID	XC03311B
Low Expiration	42000
Low Concentration	2922
Mid ID	CC349917
Mid Expiration	7/7/2014
Mid Concentration	4940
High ID	CC351430
High Expiration	10/21/2014
High Concentration	8936

Calibration Error	THC (ppm) Washer2
Zero Response	0.31
Zero Error (%)	0
Low Response	2922.13
Low Error (%)	0
Mid Response	4941.22
Mid Error (%)	0.02
High Response	8936.71
High Error (%)	0.01

Initial Bias	THC (ppm) Washer2
Zero Response	0
Zero Bias (%)	0
Span Concentration	2922
Span Response	0
Span Bias (%)	0

Print Tab

Log Averages	THC (ppm) Washer2
29Nov2012 - 07:16:00	104.31
29Nov2012 - 07:17:00	124.38
29Nov2012 - 07:18:00	110.83
29Nov2012 - 07:19:00	109.64
29Nov2012 - 07:20:00	99.78
29Nov2012 - 07:21:00	89.48
29Nov2012 - 07:22:00	126.7
29Nov2012 - 07:23:00	122.87
29Nov2012 - 07:24:00	101.25
29Nov2012 - 07:25:00	88.29
29Nov2012 - 07:26:00	85.64
29Nov2012 - 07:27:00	92.49
29Nov2012 - 07:28:00	103.39
29Nov2012 - 07:29:00	93.7
29Nov2012 - 07:30:00	101.3
29Nov2012 - 07:31:00	84.23
29Nov2012 - 07:32:00	104.36
29Nov2012 - 07:33:00	41.34
29Nov2012 - 07:34:00	26.99
29Nov2012 - 07:35:00	45.82
29Nov2012 - 07:36:00	46.8
29Nov2012 - 07:37:00	47.35
29Nov2012 - 07:38:00	99.61
29Nov2012 - 07:39:00	38.42
29Nov2012 - 07:40:00	7.68
29Nov2012 - 07:41:00	16.7
29Nov2012 - 07:42:00	56.72
29Nov2012 - 07:43:00	83.31
29Nov2012 - 07:44:00	144.71
29Nov2012 - 07:45:00	123.04
29Nov2012 - 07:46:00	114.75
29Nov2012 - 07:47:00	78.12
29Nov2012 - 07:48:00	129.49
29Nov2012 - 07:49:00	118.93
29Nov2012 - 07:50:00	101.73
29Nov2012 - 07:51:00	103.86
29Nov2012 - 07:52:00	120.3
29Nov2012 - 07:53:00	114.35
29Nov2012 - 07:54:00	121.77
29Nov2012 - 07:55:00	119.15
29Nov2012 - 07:56:00	103.06
29Nov2012 - 07:57:00	120.59
29Nov2012 - 07:58:00	121.92
29Nov2012 - 07:59:00	131.54
29Nov2012 - 08:00:00	112.4
29Nov2012 - 08:01:00	140.44
29Nov2012 - 08:02:00	92.13
29Nov2012 - 08:03:00	112.83
29Nov2012 - 08:04:00	123.56
29Nov2012 - 08:05:00	108.53
29Nov2012 - 08:06:00	147.1
29Nov2012 - 08:07:00	89.35
29Nov2012 - 08:08:00	77.76
29Nov2012 - 08:09:00	103.04
29Nov2012 - 08:10:00	143.25
29Nov2012 - 08:11:00	121.82
29Nov2012 - 08:12:00	124.63
29Nov2012 - 08:13:00	117.33

Washer 2 Exhaust Summaries

Time	Ave THC Conc	MW	(SCFM)	lb/hr
0803 - 1135	574.2	12	296	0.32
Run 2 aborted				

29Nov2012 - 08:14:00	117.62
29Nov2012 - 08:15:00	119.66
29Nov2012 - 08:16:00	101.47
29Nov2012 - 08:17:00	112.88
29Nov2012 - 08:18:00	95.18
29Nov2012 - 08:19:00	91.78
29Nov2012 - 08:20:00	112.8
29Nov2012 - 08:21:00	134.92
29Nov2012 - 08:22:00	149.39
29Nov2012 - 08:23:00	123.81
29Nov2012 - 08:24:00	132.17
29Nov2012 - 08:25:00	123.19
29Nov2012 - 08:26:00	114.14
29Nov2012 - 08:27:00	138.78
29Nov2012 - 08:28:00	120.28
29Nov2012 - 08:29:00	116.47
29Nov2012 - 08:30:00	120.61
29Nov2012 - 08:31:00	116.72
29Nov2012 - 08:32:00	101.7
29Nov2012 - 08:33:00	106.49
29Nov2012 - 08:34:00	106.89
29Nov2012 - 08:35:00	152.03
29Nov2012 - 08:36:00	143.95
29Nov2012 - 08:37:00	125.04
29Nov2012 - 08:38:00	118.49
29Nov2012 - 08:39:00	120.82
29Nov2012 - 08:40:00	115.77
29Nov2012 - 08:41:00	126.68
29Nov2012 - 08:42:00	86.87
29Nov2012 - 08:43:00	123.32
29Nov2012 - 08:44:00	128.82
29Nov2012 - 08:45:00	118.93
29Nov2012 - 08:46:00	116.62
29Nov2012 - 08:47:00	131.51
29Nov2012 - 08:48:00	118.31
29Nov2012 - 08:49:00	117.72
29Nov2012 - 08:50:00	127.16
29Nov2012 - 08:51:00	120.22
29Nov2012 - 08:52:00	128.34
29Nov2012 - 08:53:00	117.01
29Nov2012 - 08:54:00	115.54
29Nov2012 - 08:55:00	109.81
29Nov2012 - 08:56:00	108.33
29Nov2012 - 08:57:00	116.34
29Nov2012 - 08:58:00	109.27
29Nov2012 - 08:59:00	104.82
29Nov2012 - 09:00:00	133.77
29Nov2012 - 09:01:00	129.69
29Nov2012 - 09:02:00	119.25
29Nov2012 - 09:03:00	121.73
29Nov2012 - 09:04:00	82.98
29Nov2012 - 09:05:00	128.82
29Nov2012 - 09:06:00	111.27
29Nov2012 - 09:07:00	130.51
29Nov2012 - 09:08:00	130.85
29Nov2012 - 09:09:00	116.06
29Nov2012 - 09:10:00	113.27
29Nov2012 - 09:11:00	128.06
29Nov2012 - 09:12:00	98.79
29Nov2012 - 09:13:00	116.31
29Nov2012 - 09:14:00	106.26

29Nov2012 - 09:15:00	109.61
29Nov2012 - 09:16:00	117.26
29Nov2012 - 09:17:00	116.95
29Nov2012 - 09:18:00	160.3
29Nov2012 - 09:19:00	145.56
29Nov2012 - 09:20:00	121.89
29Nov2012 - 09:21:00	123.61
29Nov2012 - 09:22:00	109.61
29Nov2012 - 09:23:00	109.73
29Nov2012 - 09:24:00	136.6
29Nov2012 - 09:25:00	116.72
29Nov2012 - 09:26:00	139.29
29Nov2012 - 09:27:00	138.06
29Nov2012 - 09:28:00	169.36
29Nov2012 - 09:29:00	159.4

START WASH LOAD 2 (WASHER 2)

29Nov2012 - 09:30:00	147.68
29Nov2012 - 09:31:00	285.42
29Nov2012 - 09:32:00	536.63
29Nov2012 - 09:33:00	133.76
29Nov2012 - 09:34:00	139.39
29Nov2012 - 09:35:00	277.3
29Nov2012 - 09:36:00	906.34
29Nov2012 - 09:37:00	1835.01
29Nov2012 - 09:38:00	1535.82
29Nov2012 - 09:39:00	1103.34
29Nov2012 - 09:40:00	861.73
29Nov2012 - 09:41:00	878.53
29Nov2012 - 09:42:00	966.91
29Nov2012 - 09:43:00	1129.33
29Nov2012 - 09:44:00	1288.76
29Nov2012 - 09:45:00	1659.3
29Nov2012 - 09:46:00	2185.62
29Nov2012 - 09:47:00	2583.49
29Nov2012 - 09:48:00	3312.88
29Nov2012 - 09:49:00	4028.12
29Nov2012 - 09:50:00	4805.86
29Nov2012 - 09:51:00	4571.69
29Nov2012 - 09:52:00	945.62
29Nov2012 - 09:53:00	510.67
29Nov2012 - 09:54:00	439.72
29Nov2012 - 09:55:00	362.58
29Nov2012 - 09:56:00	385.59
29Nov2012 - 09:57:00	315.92
29Nov2012 - 09:58:00	330.57
29Nov2012 - 09:59:00	305.24
29Nov2012 - 10:00:00	311.43
29Nov2012 - 10:01:00	322.47
29Nov2012 - 10:02:00	326.51
29Nov2012 - 10:03:00	307.21
29Nov2012 - 10:04:00	299.9
29Nov2012 - 10:05:00	285.69
29Nov2012 - 10:06:00	290.92
29Nov2012 - 10:07:00	262.46
29Nov2012 - 10:08:00	293.42
29Nov2012 - 10:09:00	266.02
29Nov2012 - 10:10:00	281.83
29Nov2012 - 10:11:00	291.94
29Nov2012 - 10:12:00	273.77

29Nov2012 - 10:13:00	281.73
29Nov2012 - 10:14:00	300.39
29Nov2012 - 10:15:00	253.4
29Nov2012 - 10:16:00	244.63
29Nov2012 - 10:17:00	305.57
29Nov2012 - 10:18:00	259.75
29Nov2012 - 10:19:00	294.96
29Nov2012 - 10:20:00	274.95
29Nov2012 - 10:21:00	241.36
29Nov2012 - 10:22:00	245.93
29Nov2012 - 10:23:00	199.67
29Nov2012 - 10:24:00	251.26
29Nov2012 - 10:25:00	217.13
29Nov2012 - 10:26:00	277
29Nov2012 - 10:27:00	272.27
29Nov2012 - 10:28:00	258.88
29Nov2012 - 10:29:00	257.06
29Nov2012 - 10:30:00	190.33
29Nov2012 - 10:31:00	253.82
29Nov2012 - 10:32:00	256.93
29Nov2012 - 10:33:00	223.44
29Nov2012 - 10:34:00	257.17
29Nov2012 - 10:35:00	285.01
29Nov2012 - 10:36:00	256.75
29Nov2012 - 10:37:00	226.95
29Nov2012 - 10:38:00	227
29Nov2012 - 10:39:00	214.57
29Nov2012 - 10:40:00	290.79
29Nov2012 - 10:41:00	331.93
29Nov2012 - 10:42:00	356.83
29Nov2012 - 10:43:00	458.5
29Nov2012 - 10:44:00	497.25
29Nov2012 - 10:45:00	253.38
29Nov2012 - 10:46:00	279.45
29Nov2012 - 10:47:00	276.66
29Nov2012 - 10:48:00	467.38
29Nov2012 - 10:49:00	671.72
29Nov2012 - 10:50:00	682.62
29Nov2012 - 10:51:00	732.07
29Nov2012 - 10:52:00	589.81
29Nov2012 - 10:53:00	568.33
29Nov2012 - 10:54:00	775.99
29Nov2012 - 10:55:00	736.71
29Nov2012 - 10:56:00	840.18
29Nov2012 - 10:57:00	790.23
29Nov2012 - 10:58:00	832.68
29Nov2012 - 10:59:00	195.73
29Nov2012 - 11:00:00	866.36
29Nov2012 - 11:01:00	2819.3
29Nov2012 - 11:02:00	3195.59
29Nov2012 - 11:03:00	4884.22
29Nov2012 - 11:04:00	3677.52
29Nov2012 - 11:05:00	3447.32
29Nov2012 - 11:06:00	3675.86
29Nov2012 - 11:07:00	4259.41
29Nov2012 - 11:08:00	1972.38
29Nov2012 - 11:09:00	893.27
29Nov2012 - 11:10:00	868.45
29Nov2012 - 11:11:00	752.77
29Nov2012 - 11:12:00	676.71
29Nov2012 - 11:13:00	497.19

29Nov2012 - 11:14:00	446.53
29Nov2012 - 11:15:00	387.42
29Nov2012 - 11:16:00	333.72
29Nov2012 - 11:17:00	328.15
29Nov2012 - 11:18:00	319.22
29Nov2012 - 11:19:00	310.75
29Nov2012 - 11:20:00	273.42
29Nov2012 - 11:21:00	247.8
29Nov2012 - 11:22:00	269.62
29Nov2012 - 11:23:00	255.58
29Nov2012 - 11:24:00	239.49
29Nov2012 - 11:25:00	243.63
29Nov2012 - 11:26:00	260.19
29Nov2012 - 11:27:00	242.3
29Nov2012 - 11:28:00	176.7
29Nov2012 - 11:29:00	234.86
29Nov2012 - 11:30:00	237.52
29Nov2012 - 11:31:00	220.45
29Nov2012 - 11:32:00	218.61
29Nov2012 - 11:33:00	209.21
29Nov2012 - 11:34:00	201.88
29Nov2012 - 11:35:00	220.01
29Nov2012 - 11:36:00	215.13
29Nov2012 - 11:37:00	176.46
29Nov2012 - 11:38:00	191.99
29Nov2012 - 11:39:00	205.71
29Nov2012 - 11:40:00	240.99
29Nov2012 - 11:41:00	248.75
29Nov2012 - 11:42:00	216.77
29Nov2012 - 11:43:00	211.22
29Nov2012 - 11:44:00	213
29Nov2012 - 11:45:00	217.12
29Nov2012 - 11:46:00	226.98
29Nov2012 - 11:47:00	218.25
29Nov2012 - 11:48:00	203.1
29Nov2012 - 11:49:00	206.81
29Nov2012 - 11:50:00	201.57
29Nov2012 - 11:51:00	218.25
29Nov2012 - 11:52:00	192.15
29Nov2012 - 11:53:00	193.51
29Nov2012 - 11:54:00	195.76
29Nov2012 - 11:55:00	136.34
29Nov2012 - 11:56:00	155.05
29Nov2012 - 11:57:00	128.95
29Nov2012 - 11:58:00	122.87
29Nov2012 - 11:59:00	116.13
29Nov2012 - 12:00:00	126.65
29Nov2012 - 12:01:00	98.38
29Nov2012 - 12:02:00	76.14
29Nov2012 - 12:03:00	161.85
29Nov2012 - 12:04:00	161.24
29Nov2012 - 12:05:00	166.13
29Nov2012 - 12:06:00	169.87
29Nov2012 - 12:07:00	121.77
29Nov2012 - 12:08:00	149.76
29Nov2012 - 12:09:00	145.07
29Nov2012 - 12:10:00	156.36
29Nov2012 - 12:11:00	147.43
29Nov2012 - 12:12:00	177.72
29Nov2012 - 12:13:00	182.63
29Nov2012 - 12:14:00	136.12

29Nov2012 - 12:15:00	125.68
29Nov2012 - 12:16:00	165.31
29Nov2012 - 12:17:00	164.36
29Nov2012 - 12:18:00	216.23
29Nov2012 - 12:19:00	259.24
29Nov2012 - 12:20:00	251.69
29Nov2012 - 12:21:00	188.05
29Nov2012 - 12:22:00	289.22
29Nov2012 - 12:23:00	373.15
29Nov2012 - 12:24:00	380.55
29Nov2012 - 12:25:00	624.44
29Nov2012 - 12:26:00	333.47
29Nov2012 - 12:27:00	252.66
29Nov2012 - 12:28:00	239.62
29Nov2012 - 12:29:00	223.91
29Nov2012 - 12:30:00	202.26
29Nov2012 - 12:31:00	181.58
29Nov2012 - 12:32:00	77.37
29Nov2012 - 12:33:00	125.04
29Nov2012 - 12:34:00	265.43
29Nov2012 - 12:35:00	259.01
29Nov2012 - 12:36:00	85.64
29Nov2012 - 12:37:00	703.71
29Nov2012 - 12:38:00	424.07
29Nov2012 - 12:39:00	217.99
29Nov2012 - 12:40:00	229.13
29Nov2012 - 12:41:00	552.9
29Nov2012 - 12:42:00	195.42
29Nov2012 - 12:43:00	71.85
29Nov2012 - 12:44:00	281.76
29Nov2012 - 12:45:00	2036.96
29Nov2012 - 12:46:00	2754.05
29Nov2012 - 12:47:00	1287
29Nov2012 - 12:48:00	820.15
29Nov2012 - 12:49:00	726.11
29Nov2012 - 12:50:00	685.56
29Nov2012 - 12:51:00	674.15
29Nov2012 - 12:52:00	413.89
29Nov2012 - 12:53:00	304.38
29Nov2012 - 12:54:00	291.01
29Nov2012 - 12:55:00	300.38
29Nov2012 - 12:56:00	195.91
29Nov2012 - 12:57:00	234.72
29Nov2012 - 12:58:00	510.39
29Nov2012 - 12:59:00	310.01
29Nov2012 - 13:00:00	443.26
29Nov2012 - 13:01:00	1361.64
29Nov2012 - 13:02:00	541.53
29Nov2012 - 13:03:00	341.16
29Nov2012 - 13:04:00	215.56
29Nov2012 - 13:05:00	683.72
29Nov2012 - 13:06:00	498.42
29Nov2012 - 13:07:00	218.09
29Nov2012 - 13:08:00	71.3
29Nov2012 - 13:09:00	45.23
29Nov2012 - 13:10:00	26.51
29Nov2012 - 13:11:00	59
29Nov2012 - 13:12:00	59.44
29Nov2012 - 13:13:00	31.18
29Nov2012 - 13:14:00	396.36
29Nov2012 - 13:15:00	370.13

29Nov2012 - 13:16:00	237.26	

END WASHER LOAD 2 (WASHER 2)

AVERAGES	**574.2**	
29Nov2012 - 13:17:00	274.36	
29Nov2012 - 13:18:00	451.47	
29Nov2012 - 13:19:00	738.32	
29Nov2012 - 13:20:00	664.92	
29Nov2012 - 13:21:00	726.52	
29Nov2012 - 13:22:00	653.66	
29Nov2012 - 13:23:00	653.61	
29Nov2012 - 13:24:00	626.99	
29Nov2012 - 13:25:00	623.24	
29Nov2012 - 13:26:00	592.94	
29Nov2012 - 13:27:00	662.17	
29Nov2012 - 13:28:00	681.96	
29Nov2012 - 13:29:00	617.56	
29Nov2012 - 13:30:00	665.81	
29Nov2012 - 13:31:00	607.96	
29Nov2012 - 13:32:00	632.62	
29Nov2012 - 13:33:00	590.4	
29Nov2012 - 13:34:00	580.79	
29Nov2012 - 13:35:00	629.06	
29Nov2012 - 13:36:00	721.71	
29Nov2012 - 13:37:00	693.96	
29Nov2012 - 13:38:00	654.73	
29Nov2012 - 13:39:00	565.81	
29Nov2012 - 13:40:00	542.3	
29Nov2012 - 13:41:00	617.83	
29Nov2012 - 13:42:00	625.05	
29Nov2012 - 13:43:00	636.39	
29Nov2012 - 13:44:00	612.62	
29Nov2012 - 13:45:00	552.76	
29Nov2012 - 13:46:00	602.12	
29Nov2012 - 13:47:00	526.79	
29Nov2012 - 13:48:00	532.89	
29Nov2012 - 13:49:00	483.55	
29Nov2012 - 13:50:00	637.61	
29Nov2012 - 13:51:00	673.43	
29Nov2012 - 13:52:00	672.02	
29Nov2012 - 13:53:00	699.64	
29Nov2012 - 13:54:00	530.76	
29Nov2012 - 13:55:00	551.1	
29Nov2012 - 13:56:00	1773.68	
29Nov2012 - 13:57:00	2918.73	SPAN
29Nov2012 - 13:58:00	2910.15	
29Nov2012 - 13:59:00	1419.93	
29Nov2012 - 14:00:00	4.73	ZERO
29Nov2012 - 14:01:00	28.11	
29Nov2012 - 14:02:00	285.69	
29Nov2012 - 14:03:00	494.45	
29Nov2012 - 14:04:00	475.99	
29Nov2012 - 14:05:00	427.67	
29Nov2012 - 14:06:00	507.81	
29Nov2012 - 14:07:00	505.56	
29Nov2012 - 14:08:00	1795.58	
29Nov2012 - 14:09:00	667.68	
29Nov2012 - 14:10:00	457.84	
29Nov2012 - 14:11:00	382.05	
29Nov2012 - 14:12:00	399.12	

29Nov2012 - 14:13:00	392.45
29Nov2012 - 14:14:00	321.83
29Nov2012 - 14:15:00	363.05
29Nov2012 - 14:16:00	269.65
29Nov2012 - 14:17:00	304.89
29Nov2012 - 14:18:00	436.63
29Nov2012 - 14:19:00	397.3
29Nov2012 - 14:20:00	497.38
29Nov2012 - 14:21:00	514.28
29Nov2012 - 14:22:00	527.31
29Nov2012 - 14:23:00	541.28
29Nov2012 - 14:24:00	564.36
29Nov2012 - 14:25:00	547.27
29Nov2012 - 14:26:00	696.87
29Nov2012 - 14:27:00	612.84
29Nov2012 - 14:28:00	147.73
29Nov2012 - 14:29:00	81.79
29Nov2012 - 14:30:00	64.2
29Nov2012 - 14:31:00	155.43
29Nov2012 - 14:32:00	456.39
29Nov2012 - 14:33:00	488.83
29Nov2012 - 14:34:00	574.7
29Nov2012 - 14:35:00	155.05
29Nov2012 - 14:36:00	209.99
29Nov2012 - 14:37:00	459.81
29Nov2012 - 14:38:00	543.94
29Nov2012 - 14:39:00	560.36
29Nov2012 - 14:40:00	589.08
29Nov2012 - 14:41:00	622.8
29Nov2012 - 14:42:00	688.22
29Nov2012 - 14:43:00	614.71
29Nov2012 - 14:44:00	298.18
29Nov2012 - 14:45:00	212.37
29Nov2012 - 14:46:00	166.62
29Nov2012 - 14:47:00	57.64
29Nov2012 - 14:48:00	53.11
29Nov2012 - 14:49:00	61.69
29Nov2012 - 14:50:00	56.11
29Nov2012 - 14:51:00	174.54
29Nov2012 - 14:52:00	233.21
29Nov2012 - 14:53:00	229.13
29Nov2012 - 14:54:00	224.09
29Nov2012 - 14:55:00	210.49
29Nov2012 - 14:56:00	264.07
29Nov2012 - 14:57:00	425.22
29Nov2012 - 14:58:00	434.18
29Nov2012 - 14:59:00	421.95
29Nov2012 - 15:00:00	553.1
29Nov2012 - 15:01:00	745.39
29Nov2012 - 15:02:00	285.83
29Nov2012 - 15:03:00	539.46
29Nov2012 - 15:04:00	631.32
29Nov2012 - 15:05:00	532.61
29Nov2012 - 15:06:00	513.34
29Nov2012 - 15:07:00	478.88
29Nov2012 - 15:08:00	518.76
29Nov2012 - 15:09:00	521.15
29Nov2012 - 15:10:00	535.58
29Nov2012 - 15:11:00	490.08
29Nov2012 - 15:12:00	503.56
29Nov2012 - 15:13:00	572.63

29Nov2012 - 15:14:00	481.08
29Nov2012 - 15:15:00	558.11
29Nov2012 - 15:16:00	549.46
29Nov2012 - 15:17:00	510.19
29Nov2012 - 15:18:00	526.52
29Nov2012 - 15:19:00	531.76
29Nov2012 - 15:20:00	607.09
29Nov2012 - 15:21:00	525.67
29Nov2012 - 15:22:00	471.64
29Nov2012 - 15:23:00	467.2
29Nov2012 - 15:24:00	511.09
29Nov2012 - 15:25:00	520.22
29Nov2012 - 15:26:00	573.57
29Nov2012 - 15:27:00	555.27
29Nov2012 - 15:28:00	658.47
29Nov2012 - 15:29:00	599.62
29Nov2012 - 15:30:00	357.39
29Nov2012 - 15:31:00	233.37
29Nov2012 - 15:32:00	216.02
29Nov2012 - 15:33:00	163.68
29Nov2012 - 15:34:00	180.33

START WASH LOAD 4 (WASHER 2)

29Nov2012 - 15:35:00	189.69
29Nov2012 - 15:36:00	559.35
29Nov2012 - 15:37:00	2686.61
29Nov2012 - 15:38:00	2491.07
29Nov2012 - 15:39:00	889.23
29Nov2012 - 15:40:00	613.59
29Nov2012 - 15:41:00	1128.64
29Nov2012 - 15:42:00	621.91
29Nov2012 - 15:43:00	546.11
29Nov2012 - 15:44:00	617.48
29Nov2012 - 15:45:00	676.97
29Nov2012 - 15:46:00	729.55
29Nov2012 - 15:47:00	843.12
29Nov2012 - 15:48:00	895.11
29Nov2012 - 15:49:00	982.93
29Nov2012 - 15:50:00	963.94
29Nov2012 - 15:51:00	1042.8
29Nov2012 - 15:52:00	1155.89
29Nov2012 - 15:53:00	1259.54
29Nov2012 - 15:54:00	1353.47
29Nov2012 - 15:55:00	1627.38
29Nov2012 - 15:56:00	1747.22
29Nov2012 - 15:57:00	2124.75
29Nov2012 - 15:58:00	4249.9
29Nov2012 - 15:59:00	3028.1
29Nov2012 - 16:00:00	3294.48
29Nov2012 - 16:01:00	3662.14
29Nov2012 - 16:02:00	3711.47
29Nov2012 - 16:03:00	2366
29Nov2012 - 16:04:00	411.66
29Nov2012 - 16:05:00	149.5
29Nov2012 - 16:06:00	92.57
29Nov2012 - 16:07:00	80.72
29Nov2012 - 16:08:00	36.79
29Nov2012 - 16:09:00	55.24
29Nov2012 - 16:10:00	51.17
29Nov2012 - 16:11:00	42.96

29Nov2012 - 16:12:00	52.37
29Nov2012 - 16:13:00	47
29Nov2012 - 16:14:00	35.41
29Nov2012 - 16:15:00	66.47
29Nov2012 - 16:16:00	47.74
29Nov2012 - 16:17:00	46.51
29Nov2012 - 16:18:00	37.09
29Nov2012 - 16:19:00	27.27
29Nov2012 - 16:20:00	48.07
29Nov2012 - 16:21:00	59.95
29Nov2012 - 16:22:00	73.41
29Nov2012 - 16:23:00	20.24
29Nov2012 - 16:24:00	-0.31
29Nov2012 - 16:25:00	0.63

STOP WASH LOAD 4 (WASHER 2) - LOAD INCOMPLETE, COULD NOT WASH BECAUSE STEAM GENERATOR TRIPPED

29Nov2012 - 16:26:00	892.3
29Nov2012 - 16:27:00	481.43
29Nov2012 - 16:28:00	218.38
29Nov2012 - 16:29:00	67.41
29Nov2012 - 16:30:00	19.08
29Nov2012 - 16:31:00	67.82
29Nov2012 - 16:32:00	84.67
29Nov2012 - 16:33:00	50.05
29Nov2012 - 16:34:00	16.71
29Nov2012 - 16:35:00	41.67
29Nov2012 - 16:36:00	7.57
29Nov2012 - 16:37:00	50.84
29Nov2012 - 16:38:00	58.18
29Nov2012 - 16:39:00	33.9
29Nov2012 - 16:40:00	51.97
29Nov2012 - 16:41:00	69.75
29Nov2012 - 16:42:00	67.01
29Nov2012 - 16:43:00	109.61
29Nov2012 - 16:44:00	123.88
29Nov2012 - 16:45:00	97.87
29Nov2012 - 16:46:00	88.73
29Nov2012 - 16:47:00	128.59
29Nov2012 - 16:48:00	150.19
29Nov2012 - 16:49:00	160.02
29Nov2012 - 16:50:00	162.12
29Nov2012 - 16:51:00	147.7
29Nov2012 - 16:52:00	158.46
29Nov2012 - 16:53:00	203.41
29Nov2012 - 16:54:00	184.11
29Nov2012 - 16:55:00	168.9
29Nov2012 - 16:56:00	116
29Nov2012 - 16:57:00	-1.44
29Nov2012 - 16:58:00	3.44
29Nov2012 - 16:59:00	0.73
29Nov2012 - 17:00:00	13.41
29Nov2012 - 17:01:00	2545.18
29Nov2012 - 17:02:00	2928.22
29Nov2012 - 17:03:00	2936.2
29Nov2012 - 17:04:00	1769.45
29Nov2012 - 17:05:00	349.49
29Nov2012 - 17:06:00	338.94
29Nov2012 - 17:07:00	414.35
29Nov2012 - 17:08:00	550.36

29Nov2012 - 17:09:00	549.37
29Nov2012 - 17:10:00	613.36
29Nov2012 - 17:11:00	396.02
29Nov2012 - 17:12:00	26.56
29Nov2012 - 17:13:00	9.93
29Nov2012 - 17:14:00	18.73
29Nov2012 - 17:15:00	28.37
29Nov2012 - 17:16:00	36.66
29Nov2012 - 17:17:00	8.1
29Nov2012 - 17:18:00	22.56
29Nov2012 - 17:19:00	23.41
29Nov2012 - 17:20:00	14.19
29Nov2012 - 17:21:00	27.24
29Nov2012 - 17:22:00	20.55
29Nov2012 - 17:23:00	2.78
29Nov2012 - 17:24:00	-46.95
29Nov2012 - 17:25:00	-17
29Nov2012 - 17:26:00	-23
29Nov2012 - 17:27:00	0.18
29Nov2012 - 17:28:00	-0.1
29Nov2012 - 17:29:00	0.46
29Nov2012 - 17:30:00	-25.23
29Nov2012 - 17:31:00	6.62
29Nov2012 - 17:32:00	-5.53
29Nov2012 - 17:33:00	-10.16
29Nov2012 - 17:34:00	-1
29Nov2012 - 17:35:00	-14.62
29Nov2012 - 17:36:00	-10.83
29Nov2012 - 17:37:00	-6.68
29Nov2012 - 17:38:00	2.22
29Nov2012 - 17:39:00	-1.18
29Nov2012 - 17:40:00	3.09
29Nov2012 - 17:41:00	-3.59
29Nov2012 - 17:42:00	-6.66
29Nov2012 - 17:43:00	-11.65
29Nov2012 - 17:43:49	-14.54

Ellis Washer # 2 - Print Towels With Strip
G&K Services
Methods 1-4 Summary

Run No.	**W2 - PT - 1**	**W2 - PT - 2**	
Date:	**29-Nov-12**	**29-Nov-12**	
Start Time	**9:30**		
Stop Time	**13:16**		**AVERAGES**
Barometric Pressure, (inches of mercury)	29.96	29.96	29.96
Net Sampling Time, (minutes)	226.0		226.0
Wet Bulb Temp., (F)	41	43	42
Dry Bulb Temp., (F)	44	47	46
Calculated Saturation Constant	0.00863	0.00933	0.0090
Moisture, (percent)	0.7	0.8	0.8
Dry Mole Fraction	0.9926	0.9923	0.9924
CO_2 Concentration, (percent dry)	0.0	0.0	0.0
O_2 Concentration, (percent dry)	20.9	20.9	20.9
CO and N_2, (percent dry)	79.1	79.1	79.1
Dry Molecular Weight, (lb/lb mole)	28.84	28.84	28.84
Wet Molecular Weight, (lb/lb mole)	28.76	28.75	28.75
Excess Air at Stack, (percent)	-118750.0	-118750.0	-118750.0
Stack Area, (square inches)	28.3	28.3	28.3
Static Pressure, (inches of water)	-1.20	-1.30	-1.25
Stack Pressure, (inches of mercury)	29.87	29.86	29.87
Average Stack Temperature, (°F)	44	47	46
Average Sqroot of ΔP	0.4363	0.4250	0.4307
SDE Average	9.798	9.574	9.686
Pitot Coefficient	0.84	0.84	0.84
Stack Gas Velocity, (actual feet per minute - afpm)	1,441	1,408	1,424
Stack Flowrate, (actual cubic feet per minute - acfm)	283	276	280
Stack Flowrate, (standard cubic feet per minute - scfm)	296	287	292
Stack Flowrate, (dry standard cubic feet per minute - dscfm)	293	285	289

Print Towels

Method 2 Data Sheet

washer 2

1

Plant	G+K	Date	11-29-2012
Location	Washer 2	Time	9:35

Stack Diameter	6	"	Area, A		ft^2
Barometric Pressure, P_b	29.96	"Hg	Meter Temp.		°F
% Moisture		$\%H_2O$	Stack O_2		%
Static Pressure, P_g	-1.2	$"H_2O$	Stack CO_2		%
Pitot Coefficient, C_p	.84		MW (wet)		lb/lb-mole

Port	Point	ΔP	$\sqrt{\Delta P}$	T_S (°F)	+ θ clockwise - θ counter-clockwise	$\sqrt{\Delta P}\cos\theta$	
A	1	.16		42			
	2	.17		44			
	3	.18		47			
	4	.18		46			
	5	.21		47			
	6	.22		48			
B	1	.20		44			
	2	.19		45			
	3	.21		43			
	4	.19		42			
	5	.21		42			
	6	.17		42			
			wet bulb	41°			
	Average						

Average Absolute Temp.

Absolute Gas Temperature, $T_{ST} = T_S + 460°$

Absolute Gas Pressure, $P_S = P_b + P_g/13.6$ "Hg

Gas Velocity, $V_s = (85.49)\ C_p \sqrt{\Delta P}\,avg \sqrt{\frac{T_{ST}\,avg}{P_S\ M_W}}$ ft/sec

Actual Gas Flowrate, $Q_a = (V_s)\ (60)\ (A)$ ACFM

Standard Gas Flowrate, $Q_{std} = \left[\frac{528°R}{T_{ST}}\right]\left[\frac{P_S}{29.92}\right]\left[\frac{100 - \%H_2O}{100}\right]Q_a$ DSCFM

Method 2 Data Sheet

Plant	G+K	Date	11-29-2012
Location	Washer 2	Time	15:37

Stack Diameter	6	"	Area, A		ft^2
Barometric Pressure, P_b	29.96	"Hg	Meter Temp.		°F
% Moisture		$\%H_2O$	Stack O_2		%
Static Pressure, P_g	-1.3	$"H_2O$	Stack CO_2		%
Pitot Coefficient, C_p	.84		MW (wet)		lb/lb-mole

Port	Point	ΔP	$\sqrt{\Delta P}$	T_S (°F)	+ θ clockwise - θ counter-clockwise	$\sqrt{\Delta P}\cos\theta$	
A	1	.17		46			
	2	.18		46			
	3	.16		47			
	4	.17		47			
	5	.19		49			
	6	.19		50			
B	1	.20		48			
	2	.19		48			
	3	.18		47			
	4	.18		47			
	5	.19		47			
	6	.17		47			
			Wetbulb 43				
	Average						

Average Absolute Temp. _____

Absolute Gas Temperature, $T_{ST} = T_S + 460°$

Absolute Gas Pressure, $P_S = P_b + P_g/13.6$ _____ "Hg

Gas Velocity, $V_s = (85.49)\ C_p\ \sqrt{\Delta P}\,avg\ \sqrt{\dfrac{T_{ST}\,avg}{P_S\ M_W}}$ _____ ft/sec

Actual Gas Flowrate, $Q_a = (V_s)\ (60)\ (A)$ _____ ACFM

Standard Gas Flowrate, $Q_{std} = \left[\dfrac{528°R}{T_{ST}}\right]\left[\dfrac{P_S}{29.92}\right]\left[\dfrac{100 - \%H_2O}{100}\right]Q_a$ _____ DSCFM

Washer 2 Print Towels

EVACUATED CANISTER SAMPLING FORM

Client: G+K	Run Number: T015-Washer2-2
Location: Washer 2	Operator: SB/EG
Process:	Sample ID:
Canister Number: 002401/SC00836	Flow Controller ID: FC5000006
Canister Leak Check Date:	Comments:

	Canister Vacuum		Barometric Pressure (mmHg)	Ambient Temperature (°C)
	Manometer (mmHg)	Gauge (inHg)		
Pre-test		30.03	29.96	39
Post				

Pretest Leak Rate	mmHg/10 minutes

Post

Elapsed Time	Clock Time	Gauge Vacuum (inHg)	~~Flow Meter Setting (ml/min)~~ Sh.	Comments
0	9:30	30		
60	10:30	27.5		
79 ~~120~~	10:49/11:02	27		Washer tripped paused test
120	11:43	25		
180	12:43	22.5		
213	13:16	21		END

TRC

Print Towels

EVACUATED CANISTER SAMPLING FORM

Client: GtK	Run Number: TO15-Washer 2-3
Location: Washer 2	Operator:
Process:	Sample ID:
Canister Number: 00564 / 5000A9	Flow Controller ID:
Canister Leak Check Date: 11/29/12	Comments:

	Canister Vacuum		Barometric Pressure (mmHg)	Ambient Temperature (°C)
	Manometer (mmHg)	Gauge (inHg)		
Pre-test		29.92	29.96	

Pretest Leak Rate	mmHg/10 minutes
	0.00

Elapsed Time	Clock Time	Gauge Vacuum (inHg)	~~Flow Meter Setting (ml/min)~~	Comments
0	15:35	29.95	8hr flow controller	
	16:37	27.5		END
		Test Aborted		

TRC

* note: Ran 2 summas on washer 2
- one for first wash
- one for second wash