Brown AND Caldwell

201 North Civic Drive, Suite 300
Walnut Creek, CA 94596

T: 925.937.9010
F: 925.937.9026

Technical Memorandum

DRAFT

Prepared for: City of Eureka

Project Title: Enclosed Bays and Estuaries Compliance Feasibility Study

Project No.: 152526.300.301

Technical Memorandum 1

Subject: Evaluation of Ammonia Toxicity during Elk River Wastewater Effluent Mixing in Humboldt Bay

Date: November 25, 2019

To: Brian Gerving, Director of Public Works, City of Eureka

Jesse Willor, Engineer, City of Eureka

From: William K. Faisst, Ph.D., P.E, .Vice President, Brown and Caldwell

Copy to: Rebecca Crow, P.E, .Project Manager, GHD
Art Molseed, P.E, .Project Manager, Brown and Caldwell
Linda Sawyer, Ph.D., P.E, .Senior Process Engineer, Brown and Caldwell

Prepared by: _____
William K. Faisst, Ph.D., P.E., Vice President
California License C29146

Reviewed by: _____
Clifton Bell, Brown and Caldwell, Subject Matter Expert

Limitations:

This is a draft memorandum and is not intended to be a final representation of the work done or recommendations made by Brown and Caldwell. It should not be relied upon; consult the final report.

This document was prepared solely for City of Eureka in accordance with professional standards at the time the services were performed and in accordance with the contract between City of Eureka and Brown and Caldwell dated August 27, 2019. This document is governed by the specific scope of work authorized by City of Eureka; it is not intended to be relied upon by any other party except for regulatory authorities contemplated by the scope of work. We have relied on information or instructions provided by City of Eureka and other parties and, unless otherwise expressly indicated, have made no independent investigation as to the validity, completeness, or accuracy of such information.

Table of Contents

List of Figures ii
List of Tables ii
Executive Summary 1
Section 1: Introduction and Background 1
1.1 Background Information 1
1.2 Scope of Work 2
Section 2: Bay Outfall Dilution Modeling 2
2.1 Model Description and General Plume Mixing Concepts 2
2.2 Outfall Dilution Model Input Parameters 2
2.3 Outfall Dilution Model Results 3
2.4 Outfall Dilution Modeling Conclusions 6
Section 3: Chemical Modeling 6
3.1 Chemical Model Inputs 6
3.2 Chemical Model Results 7
3.3 Chemical Modeling Discussion 11
References 11
Attachment A: Existing Outfall Drawings and Proposed Discharge Port Improvements ..... A
Attachment B: Detailed UM3 Model Input and Output Data ..... B

List of Figures

Figure 2-1. Dilution versus horizontal distance from diffuser, effluent flow = 6 mgd 5
Figure 2-2. Dilution versus horizontal distance from diffuser, effluent flow = 30 mgd 5
Figure 3.1: -Unionized ammonia at various dilution ratios 10
Figure 3-2. Total ammonia concentration (as N) and pH at various dilution ratios 10

List of Tables

Table 2-1. Model Results Summary, Effluent Flow = 6 mgd 4
Table 2-2. Model Results Summary, Effluent Flow = 30 mgd 4
Table 3-1. Chemical Model Inputs for Wastewater Effluent and Sea Water Composition 7
Table 3-2. Chemical Model Output 8

DRAFT for review purposes only. Use of contents on this sheet is subject to the limitations specified at the beginning of this document.
Effluent Mixing Draft TM 2019-11-25.docx

ED_006495_00001877-00002

Executive Summary

The North Coast Regional Water Quality Control Board (Water Board) has decided that the City of Eureka (City) Elk River Wastewater Treatment Plant (WWTP) effluent discharge to Humboldt Bay should be considered as a bay rather than an ocean discharge. As such Water Board staff has proposed a stringent limit for effluent ammonia owing to concerns about un-ionized ammonia toxicity. The reader should note that the El River WWTP discharge differs significantly from any other Humboldt Bay discharge (e.g., compared to the very-shallow-water Arcata discharge) or indeed, any discharge elsewhere in Region 1.

To check for toxicity from the City's discharge, Brown and Caldwell (BC) modeled mixing at flow rates of 6 million gallon per day (mgd) and 30 mgd, and then carried out chemical modeling for ammonia toxicity for the 6-mgd discharge rate using effluent data from a fall 2019 discharge day and the worst-case receiving water conditions (no current across the diffuser plus late summer/early fall receiving water conditions) for potential toxicity. This technical memorandum (TM) presents results of analyses that show no un-ionized ammonia toxicity at any time during the discharge. Even at much higher effluent total ammonia concentrations, un-ionized ammonia toxicity would not occur.

Section 1: Introduction and Background

This TM presents analyses to evaluate possible ammonia toxicity for effluent discharged from the City WWTP as it mixes in Humboldt Bay. The TM presents background information about the discharge, estimates for its mixing after discharge and chemical modeling to check for ammonia toxicity.

1.1 Background Information

Since the early 1980s, the City has discharged secondary effluent from the Elk River WWTP through a submerged multiport diffuser in Humboldt Bay (Bay). When the City planned the facilities, the best available information indicated that effluent discharged on the outgoing tide would leave the Bay. Hence, for its discharge permit, the Water Board allowed discharge categorization as an ocean discharge. As an ocean discharger, the WWTP received credit for the initial dilution (30 parts seawater per part wastewater), which resulted in a six-month median ammonia limit of 18.6 milligrams per liter (mg/L) (Water Board, 2009, order R1-2009-0033).

More recent discharge modeling by Humboldt State University (Brown and Caldwell, 2014) has shown that even with a carefully timed discharge strategy, not all effluent exits the Bay. Hence, the Water Board has determined that the City's discharge is a bay discharge governed under the California Toxics Rule and Water Quality Control Plan for the Enclosed Bays and Estuaries of California Plan (Water Quality Control Plan for Enclosed Bays and Estuaries of California). The most recent National Pollutant Discharge Elimination System (NPDES) permit (R1-2016-0001) established limits for ammonia, without the benefit of a mixing zone or dilution credit, because the Basin Plan authorizes neither. Based on the Ambient Water Quality Criteria for Ammonia (Saltwater)-1989 (United States Environmental Protection Agency (USEPA), April 1989), the un-ionized ammonia criteria concentration is 0.035 mg/L (four-day average concentration); Water Board staff used tables from this document to calculate criteria concentrations for total ammonia based on receiving water temperature and pH. Recent communications with Water Board staff have indicated that the next permit will contain revised ammonia criteria concentrations based on the following assumptions and a Water Board staff toxicity evaluation:

- Receiving water pH of 8.2 (maximum measured receiving water pH was 8.1)
- Receiving water temperature of 15 °C (maximum measured temperature was 14 degrees Celsius (°C)

DRAFT for review purposes only. Use of contents on this sheet is subject to the limitations specified at the beginning of this document.
Effluent Mixing Draft TM 2019-11-26.docx

The new total ammonia limits would be 1.68 mg/L as nitrogen (N) maximum day effluent limit and 0.9 mg/L as N average monthly effluent limit.

1.2 Scope of Work

Through its contract with GHD Engineering, the City directed BC to evaluate ammonia toxicity for effluent as it mixes in the Bay. Work included dilution calculations, chemical modeling, comparison with USEPA criteria, and reporting of findings and conclusions.

Section 2: Bay Outfall Dilution Modeling

BC evaluated predicted dilution for the existing effluent discharge, with proposed discharge port improvements, to Humboldt Bay using the outfall dilution model UM3. UM3 is a model in the most recent release of the USEPA-supported Visual Plumes modeling package (https://www.epa.gov/ceam/visual-plumes). Model analyses focused on initial, jet momentum-based dilution achieved within the first few seconds after discharge and assumed worst case ambient conditions. BC also carried modeling results through initial dilution completion. The predicted dilutions provide input to water quality toxics analyses for ammonia presented in Section 3.

2.1 Model Description and General Plume Mixing Concepts

Visual Plumes is a Windows-based graphical user interface to a suite of numerical plume models. UM3 is a three-dimensional initial dilution plume model applicable to submerged single and multi-port diffusers, capable of modeling both positively and negatively buoyant plumes. BC selected Visual Plumes for mixing modeling since it is well proven and widely used in California and is appropriate for the type of discharge and receiving water conditions.

Typically, the wastewater industry and regulators describe mixing of effluent discharged from an outfall to receiving waters in two distinct phases: 1) rapid initial dilution in the near-field, and 2) slower subsequent dilution in the far-field. Rapid initial dilution in the near-field has two distinct physical components. The first component is turbulent jet mixing and entrainment resulting from discharge momentum while exiting the diffuser ports. The second component is turbulent mixing and entrainment resulting from the plume rising in the water column due to the effluent's buoyancy. When the jet momentum and buoyancy-mixing forces dissipate, the slower process of subsequent dilution continues in the far-field. Mixing and dispersion in the far-field occurs along the boundaries of the plume, primarily in the horizontal plane laterally and longitudinally as the plume is carried by ambient currents. For the City's discharge, subsequent dilution is not relevant for the toxicity questions and BC did not considered it further for this TM.

The UM3 model reports the initial dilution value as either "center-line" or "flux-average". The flux-average dilution (the average dilution across the plume width) is always greater than the center-line dilution (the minimum dilution in the middle of the plume). Typically, one would use a center-line dilution for analysis of acute water quality concerns, while the flux-average dilution is more appropriate for chronic conditions. For this TM, we focus on the more conservative (i.e., higher) predicted centerline values.

2.2 Outfall Dilution Model Input Parameters

Input parameters to the UM3 model include the outfall discharge physical configuration, and effluent and receiving water characteristics including flow, temperature, and salinity.

DRAFT for review purposes only. Use of contents on this sheet is subject to the limitations specified at the beginning of this document.
Effluent Mixing Draft TM 2019-11-26.docx

ED_006495_00001877-00004

2.2.1 Outfall Dimensions

Elk River WWTP effluent discharges to Humboldt Bay through an outfall structure consisting of a 48-inch-diameter pipe, 4,100 feet in length, terminating in a multi-port diffuser. The existing diffuser has 90, 3-inch-diameter ports, with a port spacing of 4 feet. The originally installed pipe had flaps over the ports. Recent diver inspection has determined that the flaps largely have failed. Proposed discharge port improvements include installation of elastomeric Tideflex© check valves (manufactured by Red Valve, Inc., Pittsburgh, PA), that would improve hydraulic and dilution performance over the range of anticipated effluent flows while preventing detrimental sediment intrusion into the diffuser during lower flows. Attachment A contains existing outfall drawings and proposed discharge port improvements. Based on manufacturer data, the proposed valves have an effective diameter of 1.9 inches at an effluent flow of 6 mgd and 2.9 inches at an effluent flow of 30 mgd as discussed further below.

The effluent ports discharge horizontally relative to the Bay bottom, aligned parallel to the prevailing current regime (vertical and horizontal angles = 0 degrees). Port depth varies within the tidal cycle. The model analyses herein assume a depth of 25 feet based on average tidal conditions, but initial jet mixing, likely the most critical condition for ammonia toxicity, is independent of depth.

2.2.2 Effluent Characteristics

BC modeled effluent flow rates of 6 and 30 mgd. We selected 6 mgd to represent flow at a worst-case dry weather condition as would occur in late summer/early fall before the wet season commences. Bay waters are warmest then. Based on City data, we set effluent temperature at 20 °C, with a salinity of 0 practical salinity units (psu).

2.2.3 Receiving Water Characteristics

Receiving water characteristics include ambient salinity and temperature profiles for the water column, and current speed and direction with respect to the outfall discharge.

- The receiving water would have uniform salinity and temperature characteristics throughout the water column (unstratified conditions) (Brown and Caldwell 2014 and Brown and Caldwell 1981). Data reported at the Central and Northern California Ocean Observing System station at Humboldt Bay indicate typical average temperature and salinity conditions within the Bay are 15 °C and 34 psu, respectively. The temperature assumption is consistent with the receiving water temperature assumed by Water Board staff to calculate revised ammonia criteria concentrations for the next permit.
- Per the typical assumption for dilution analyses in California, we set the current speed conservatively at zero, consistent with discharge initiated at slack water. Discharge flow is parallel to the prevailing current.

2.3 Outfall Dilution Model Results

We performed UM3 model runs for effluent flow rates of 6 mgd and 30 mgd, with corresponding port diameters as described above. We selected 6 mgd as representative of dry weather discharges and 30 mgd as representative of peak wet weather flow. Tables 2-1 and 2-2 present results for each modeled flow rate, including model predicted dilution, plume depth, and travel time at modeled steps (distance) from the diffuser ports. Tabular results also include distances at which the individual port discharge plumes merge and rise to the water surface due to buoyancy effects. Predicted dilution is a dilution factor calculated as the effluent plume volume plus the entrained ambient volume, divided by the effluent plume volume. A dilution factor of 1 represents 100 percent effluent.

Figures 2-1 and 2-2 present tabular modeling results graphically. Attachment B provides detailed model input and output data.

DRAFT for review purposes only. Use of contents on this sheet is subject to the limitations specified at the beginning of this document.
Effluent Mixing Draft TM 2019-11-26.docx

ED_006495_00001877-00005

Table 2-1. Model Results Summary, Effluent Flow = 6 mgd				
Distance from Diffuser (feet)	Predicted Dilution	Plume Depth (feet)	Travel Time (seconds)	Plume Notes
0.3	1.8	25	0.1	
0.9	3.3	25	0.4	
1.8	5.6	25	1.2	
2.6	7.6	25	2.2	
3.2	9.5	24	3.3	
3.9	12	24	4.6	
4.5	14	23	6.2	
5.2	17	23	8.3	
6.0	23	21	12	
7.1	34	19	17	
8.2	53	15	27	Plume merges
8.5	59	14	30	
10.1	107	2.7	55	
10.3	118	0.2	61	Plume surfaces

Table 2-2. Model Results Summary, Effluent Flow = 30 mgd				
Distance from Diffuser (feet)	Predicted Dilution	Plume Depth (feet)	Travel Time (seconds)	Plume Notes
0.5	1.9	25	0.1	
1.4	3.3	25	0.3	
3.0	6.0	25	1.0	
5.5	10	25	2.8	
7.5	14	24	4.9	
9.2	17	23	7.3	
9.6	18	23	8.0	Plume merges
10.8	20	22	10	
12.6	23	20	14	
14.7	28	18	19	
17.3	35	14	26	
20.9	48	4.7	39	
21.4	51	2.9	42	
22.1	54	0.8	45	Plume surfaces

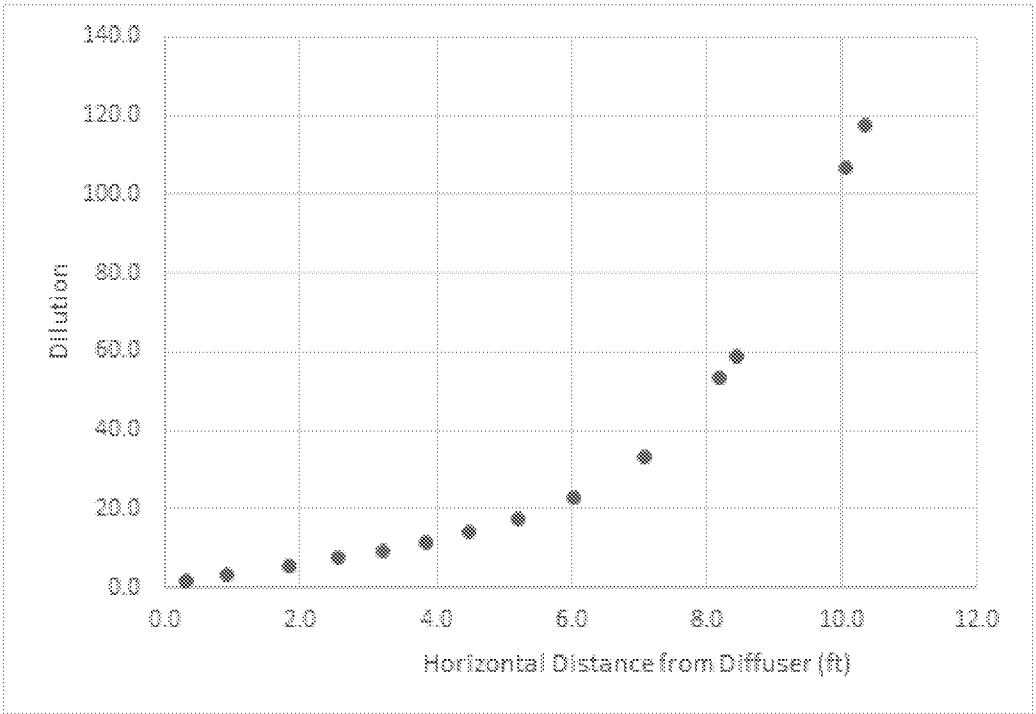

Figure 2-1. Dilution versus horizontal distance from diffuser, effluent flow = 6 mgd

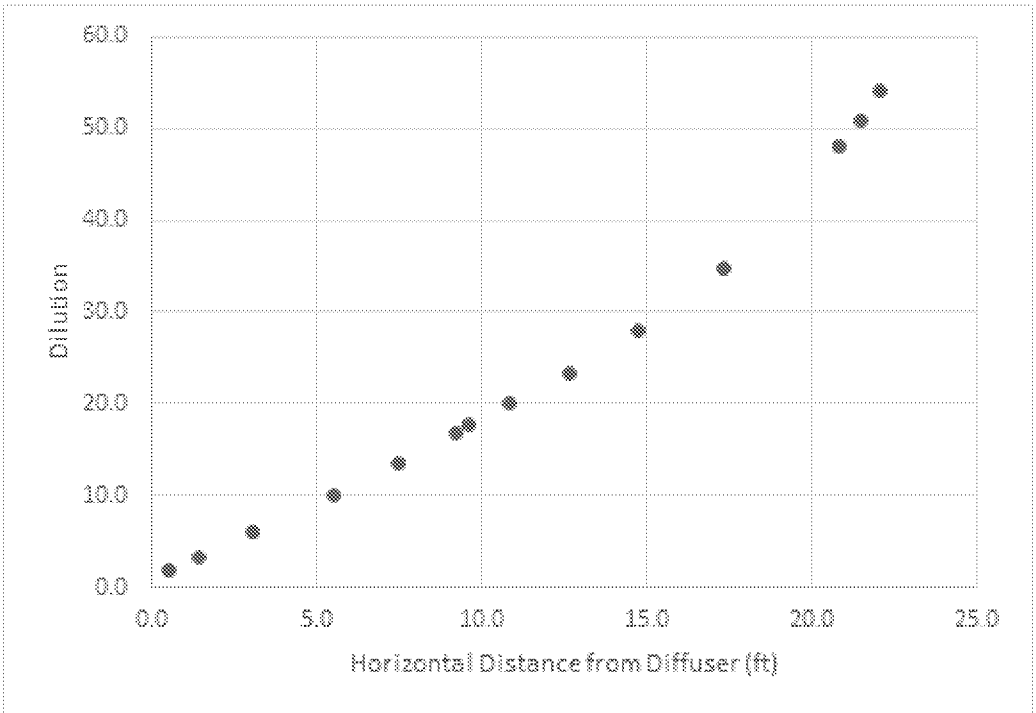

Figure 2-2. Dilution versus horizontal distance from diffuser, effluent flow = 30 mgd

2.4 Outfall Dilution Modeling Conclusions

Model results provided in Tables 2-1 and 2-2 show that for both the 6 mgd and 30 mgd cases, rapid effluent dilution of 10:1 occurs three to four seconds following discharge and within 25 port diameters (less than six feet for both cases) of the diffuser. Negligible buoyancy-based plume rise occurs within this short distance; this initial dilution is due almost entirely to jet momentum-based entrainment of the receiving water. The concentrated effluent plume, at dilutions less than 10:1, is limited to a very small bottom area near the diffuser. This area is not continuous along the diffuser axis, as the plumes from individual ports have not yet merged, i.e., it is confined to a small area around each port.

The discharge achieves much higher slack-water dilutions (in excess of 100 for an effluent flow of 6 mgd and in excess of 50 for an effluent flow of 30 mgd), as the buoyancy-based effluent mixing continues and the plume entrains additional receiving water at distances further from the diffuser. The model predicts that the effluent plume surfaces between 10 and 22 feet from the diffuser, for the 6 mgd and 30 mgd cases, respectively.

Section 3: Chemical Modeling

BC used the widely applied OLI Studio electrolyte thermodynamic software to calculate water quality in blends of wastewater effluent with the seawater at various blending ratios. BC carried out chemical modeling only for the low-flow condition, since at high flows the effluent ammonia concentration is lower because of dilute influent.

3.1 Chemical Model Inputs

Table 3-1 lists water quality parameters used as inputs to the model. To model the changes in pH, concentrations of all of the cations and anions were needed. Since these data are not routinely collected, BC extracted wastewater effluent concentration data from an Elk River WWTP wastewater effluent sample collected October 3, 2019 and analyzed by North Coast Laboratory. Wastewater effluent temperature and pH were assumed to be the yearly average values.

Receiving water temperature and pH were assumed to be consistent with the values assumed by Water Board staff to calculate revised ammonia criteria concentrations for the next permit. Cation and anion data were not available for the receiving water, so standard seawater composition was obtained from a literature review (see Table 3-1).

DRAFT for review purposes only. Use of contents on this sheet is subject to the limitations specified at the beginning of this document.
Effluent Mixing Draft TM 2019-11-26.docx

ED_006495_00001877-00008

Table 3-1. Chemical Model Inputs for Wastewater Effluent and Sea Water Composition

Parameters	Units	Wastewater Effluent	Seawater[a,b]
Alkalinity	mg/L as $CaCO_3$	93.0	103.9
Conductivity	µS/cm	940	N/A
pH	s.u.	6.5	8.2[c]
Silica	mg/L	13.0	N/A
Temperature	°C	17.7	15.0[c]
Cations			
Ammonia	mg/L as N	9.3	N/A
Calcium	mg/L	33.0	424
Magnesium	mg/L	15.0	1,331
Potassium	mg/L	24.0	411
Sodium	mg/L	66.0	11,083
Anions			
Bicarbonate	mg/L as $CaCO_3$	93.0	N/A
Chloride	mg/L	150	19,934
Fluoride	mg/L	0.22	N/A
Nitrate	mg/L as NO_3	42.1	N/A
Ortho-phosphate	mg/L as HPO_4[b]	16.7	N/A
Sulfate	mg/L	38.0	2,793

a. Alkalinity value for seawater was calculated in the model. $CaCO_3$ is calcium carbonate

b. Receiving water cation and anion composition was not available, so seawater composition obtained from http://www.soest.hawaii.edu/oceanography/courses/OCN623/Spring2012/Salinity2012web.pdf

c. Receiving water temperature and pH were consistent with values assumed by the Water Board

µS/cm = microSiemens per centimeter

CaCO3 = calcium carbonate

N/A = not applicable

NO^3 = nitrate

s.u. = standard units

3.2 Chemical Model Results

Table 3-2 presents the model output and compares the predicted ammonia concentrations (both unionized and total) to the USEPA 1989 4-day average criteria. Based on the modeling results, un-ionized ammonia is less than the 4-day average criterion (0.035 mg/L un-ionized ammonia) at a range of dilution ratios (see Figure 3-1). Figure 3-2 shows the results for total ammonia and pH. The criteria shown, which vary with pH, temperature, and salinity, are not exceeded at any dilution ratios. The USEPA 1989 one-hour average criteria are much higher than the 4-day average criteria, and so would not be exceeded either.

DRAFT for review purposes only. Use of contents on this sheet is subject to the limitations specified at the beginning of this document.
Effluent Mixing Draft TM 2019-11-26.docx

ED_006495_00001877-00009

Table 3-2. Chemical Model Output

				Un-ionized Ammonia			Total Ammonia			
Dilution Ratio	pH	Temperature °C	Salinity g/kg	In mixture (mg/L)	Criterion (mg/L)	Criterion Exceeded?	In mixture (mg/L as N)	In mixture (mg/L)	Criterion (mg/L)[a]	Criterion Exceeded ?
1	6.5	18	0.27	0.011	0.035	NO	9.32	12.0	NA	NA
1.83	6.5	17	14.9	0.005	0.035	NO	5.45	7.02	9.4	NO
2	6.6	16	17.8	0.0038	0.035	NO	4.66	6.00	9.7	NO
3	6.7	16	23.6	0.0034	0.035	NO	3.11	4.00	9.7	NO
3.3	6.8	16	24.5	0.0035	0.035	NO	2.87	3.70	9.7	NO
4	6.9	16	26.5	0.0035	0.035	NO	2.33	3.00	9.7	NO
5	7.0	16	28.2	0.0037	0.035	NO	1.86	2.40	6.2	NO
5.6	7.1	16	28.9	0.0039	0.035	NO	1.68	2.16	6.2	NO
6	7.1	16	29.3	0.0041	0.035	NO	1.55	2.00	6.2	NO
7	7.3	15	30.1	0.0045	0.035	NO	1.33	1.71	4.1	NO
7.6	7.3	15	30.5	0.0048	0.035	NO	1.23	1.59	4.1	NO
8	7.4	15	30.7	0.0049	0.035	NO	1.16	1.50	4.1	NO
9	7.5	15	31.2	0.0054	0.035	NO	1.04	1.33	3.1	NO
9.5	7.5	15	31.4	0.0056	0.035	NO	0.98	1.27	3.1	NO
10	7.5	15	31.6	0.0059	0.035	NO	0.93	1.20	3.1	NO
11	7.6	15	31.9	0.0062	0.035	NO	0.85	1.09	3.1	NO
11.5	7.6	15	32.0	0.0064	0.035	NO	0.81	1.05	1.7	NO
12	7.7	15	32.1	0.0065	0.035	NO	0.78	1.00	1.7	NO
13	7.7	15	32.4	0.0067	0.035	NO	0.72	0.92	1.7	NO
14	7.8	15	32.5	0.0068	0.035	NO	0.67	0.86	1.7	NO
15	7.8	15	32.7	0.0069	0.035	NO	0.62	0.80	1.7	NO
17	7.8	15	33.0	0.0069	0.035	NO	0.55	0.71	1.1	NO
17.4	7.9	15	33.0	0.0069	0.035	NO	0.54	0.69	1.1	NO
19	7.9	15	33.2	0.0068	0.035	NO	0.49	0.63	1.1	NO
21	7.9	15	33.4	0.0067	0.035	NO	0.44	0.57	1.1	NO
22.8	8.0	15	33.5	0.0065	0.035	NO	0.41	0.53	1.1	NO
23	8.0	15	33.5	0.0065	0.035	NO	0.41	0.52	1.1	NO
25	8.0	15	33.6	0.0063	0.035	NO	0.37	0.48	1.1	NO
27	8.0	15	33.7	0.0061	0.035	NO	0.35	0.44	1.1	NO
29	8.0	15	33.8	0.0059	0.035	NO	0.32	0.41	0.69	NO
31	8.0	15	33.9	0.0054	0.035	NO	0.30	0.39	0.69	NO
33	8.0	15	33.9	0.0054	0.035	NO	0.28	0.36	0.69	NO
33.5	8.0	15	34.0	0.0054	0.035	NO	0.28	0.36	0.69	NO

DRAFT for review purposes only. Use of contents on this sheet is subject to the limitations specified at the beginning of this document.
Effluent Mixing Draft TM 2019-11-26.docx

ED_006495_00001877-00010

Table 3-2. Chemical Model Output

				Un-ionized Ammonia			Total Ammonia			
Dilution Ratio	pH	Temperature °C	Salinity g/kg	In mixture (mg/L)	Criterion (mg/L)	Criterion Exceeded?	In mixture (mg/L as N)	In mixture (mg/L)	Criterion (mg/L)[a]	Criterion Exceeded ?
35	8.0	15	34.0	0.0053	0.035	NO	0.27	0.34	0.69	NO
37	8.1	15	34.0	0.0051	0.035	NO	0.25	0.32	0.69	NO
39	8.1	15	34.1	0.0049	0.035	NO	0.24	0.31	0.69	NO
41	8.1	15	34.1	0.0047	0.035	NO	0.23	0.29	0.69	NO
46	8.1	15	34.2	0.0044	0.035	NO	0.20	0.26	0.69	NO
51	8.1	15	34.3	0.0040	0.035	NO	0.18	0.24	0.69	NO
53.3	8.1	15	34.3	0.0039	0.035	NO	0.18	0.23	0.69	NO
56	8.1	15	34.4	0.0038	0.035	NO	0.17	0.21	0.69	NO
58.9	8.1	15	34.4	0.0036	0.035	NO	0.16	0.21	0.69	NO
69	8.1	15	34.5	0.0032	0.035	NO	0.14	0.17	0.69	NO
82	8.1	15	34.5	0.0027	0.035	NO	0.11	0.15	0.69	NO
95	8.1	15	34.6	0.0024	0.035	NO	0.10	0.13	0.69	NO
106.6	8.2	15	34.6	0.0022	0.035	NO	0.09	0.11	0.69	NO
108	8.2	15	34.6	0.0022	0.035	NO	0.09	0.11	0.69	NO
117.7	8.2	15	34.7	0.0020	0.035	NO	0.08	0.10	0.69	NO
120	8.2	15	34.7	0.0020	0.035	NO	0.08	0.10	0.69	NO

a. *Criterion for total ammonia are from tables in Ambient Water Quality Criteria for Ammonia (Saltwater)-1989 (EPA-440/5-88-004, April 1989) for the modeled pH, temperature, and salinity. Temperature was rounded up to the nearest 5 °C, and pH was rounded up to the nearest 0.2.*

g/kg = gram per kilogram

DRAFT for review purposes only. Use of contents on this sheet is subject to the limitations specified at the beginning of this document.
Effluent Mixing Draft TM 2019-11-26.docx

ED_006495_00001877-00011

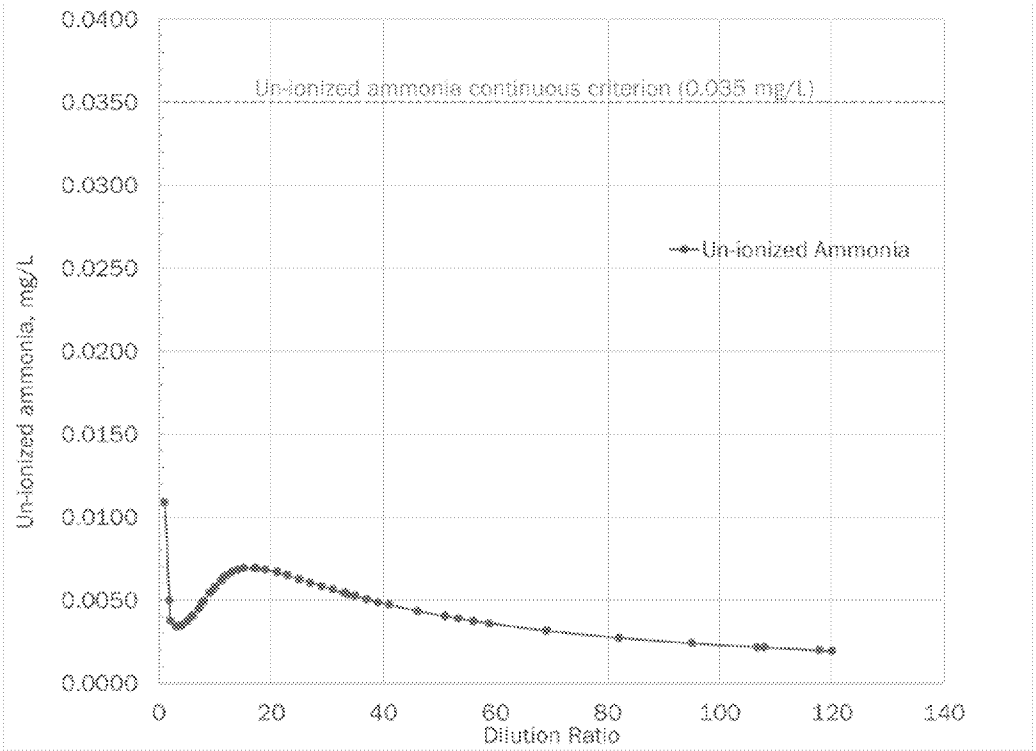

Figure 3.1: -Unionized ammonia at various dilution ratios

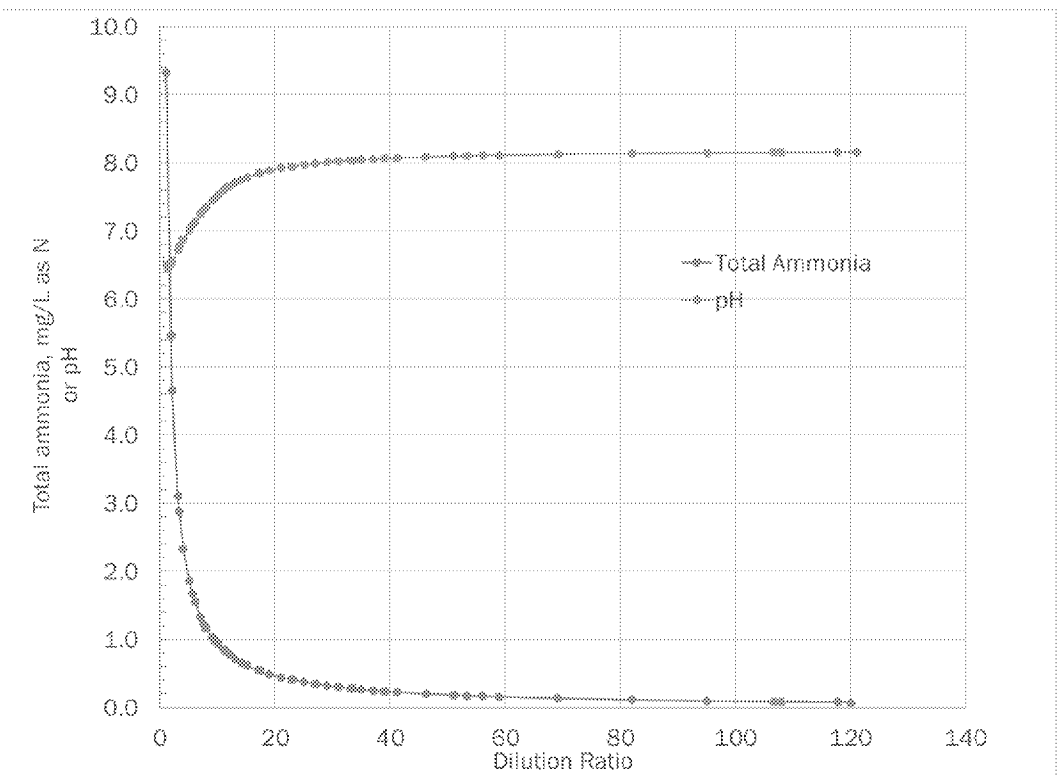

Figure 3-2. Total ammonia concentration (as N) and pH at various dilution ratios

DRAFT for review purposes only. Use of contents on this sheet is subject to the limitations specified at the beginning of this document.
Effluent Mixing Draft TM 2019-11-26.docx

3.3 Chemical Modeling Discussion

The results presented above show that at no time during the discharge described in this TM would the effluent plume be toxic for un-ionized ammonia. However, during the period September 2016 through March 2019, the highest discharge effluent total ammonia concentration was 18 mg/L. As Figure 3-1 shows, even at a much higher effluent ammonia concentrations than modeled, the effluent would continue to be nontoxic for unionized ammonia.

References

Brown and Caldwell. *City of Eureka Outfall Design Studies Final Report,* 1981

Brown and Caldwell. *Effluent Discharge Study for the Elk River Wastewater Treatment Plant*, City of Eureka, California, 2014.

United States Environmental Protection Agency. *Ambient Water Quality Criteria for Ammonia (Saltwater)-1989*, EPA-440/5-88-004, April 1989.

North Coast Regional Water Quality Control Board (Water Board), *Waste Discharge Requirements for the City of Eureka, Elk River Wastewater Treatment Plant, Humboldt County,* Order No. R1-2016-0001, NPDES No. CA0024449, June 2016.

North Coast Regional Water Quality Control Board (Water Board), *Waste Discharge Requirements for the City of Eureka, Elk River Wastewater Treatment Plant, Humboldt County,* Order No. R1-2009-0033, NPDES No. CA0024449, June 2009.

DRAFT for review purposes only. Use of contents on this sheet is subject to the limitations specified at the beginning of this document.
Effluent Mixing Draft TM 2019-11-26.docx

ED_006495_00001877-00013

This page intentionally left blank.

DRAFT for review purposes only. Use of contents on this sheet is subject to the limitations specified at the beginning of this document.
Effluent Mixing Draft TM 2019-11-26.docx

Attachment A: Existing Outfall Drawings and Proposed Discharge Port Improvements

DRAFT for review purposes only. Use of contents on this sheet is subject to the limitations specified at the beginning of this document.
Effluent Mixing Draft TM 2019-11-26.docx

ED_006495_00001877-00015

This page intentionally left blank.

DWG NO.	SH
G1	1

REVISIONS

ZONE	REV	DESCRIPTION	DATE	APVD

LOCATION MAP

SCALE: 1" = 1000'

INDEX OF DRAWINGS

DRAWING NO.	SHEET NO.	TITLE
G1	1	LOCATION AND VICINTY MAPS, INDEX OF DRAWINGS
P1	2	PLAN AND PROFILE STA. 1+00 TO STA. 11+50
P2	3	PLAN AND PROFILE STA. 11+50 TO STA. 22+50
P3	4	PLAN AND PROFILE STA. 22+50 TO STA. 33+50
P4	5	PLAN AND PROFILE STA. 33+50 TO STA. 41+00
P5	6	PLANS, SECTIONS AND DETAILS
P6	7	SECTIONS AND DETAILS
P7	8	SECTIONS AND DETAILS

COORDINATES OF SURVEY CONTROL POINTS

DESCRIPTION	COORDINATES N	COORDINATES E	ELEV.
SURVEY MONUMENT 1	530,324.57	1,392,087.50	107.58
SURVEY MONUMENT 2	529,693.92	1,392,087.93	106.28
SURVEY MONUMENT 3	529,400.10	1,392,088.54	105.13

NOTES:

1. BASIS OF COORDINATES IS THE CALIFORNIA COORDINATE SYSTEM, ZONE I, BASED ON TIE TO CAL TRANS CONTROL SURVEY POINT.
2. BASIS OF ELEVATIONS IS 100.00 FEET PLUS THE 1929 MEAN SEA LEVEL DATUM.

(1) SECTION CUT ON DWG S300 — 5 / S302 — SECTION NUMBER; DRAWING WHERE SECTION APPEARS

(2) ON DWG S302 THIS SECTION IS IDENTIFIED AS: SECTION 5 / S300 — SECTION NUMBER; DRAWING FROM WHICH SECTION WAS TAKEN

EXAMPLE OF SECTION NUMBERING SYSTEM

REGISTERED CIVIL ENGINEER — DAN P. NORRIS — No. 12216 — STATE OF CALIFORNIA

BROWN AND CALDWELL
CONSULTING ENGINEERS
EUGENE OREGON

DESIGNED WTJ
CHECKED DPN
CHECKED

SUBMITTED William T. James DATE 10/16/81
APPROVED Dan P. Norris DATE 10/16/81
For Brown and Caldwell
APPROVED DATE

FILE 850
DATE NOV 81

CITY OF EUREKA, CALIFORNIA
GREATER EUREKA AREA
WASTEWATER TREATMENT PLANT

HUMBOLDT BAY OUTFALL
LOCATION AND VICINITY MAPS, INDEX OF DRAWINGS

DRAWING NUMBER G1
SHEET 1

BC6P8

DWG NO. P4 SH 5

REVISIONS				
ZONE	REV	DESCRIPTION	DATE	APVD

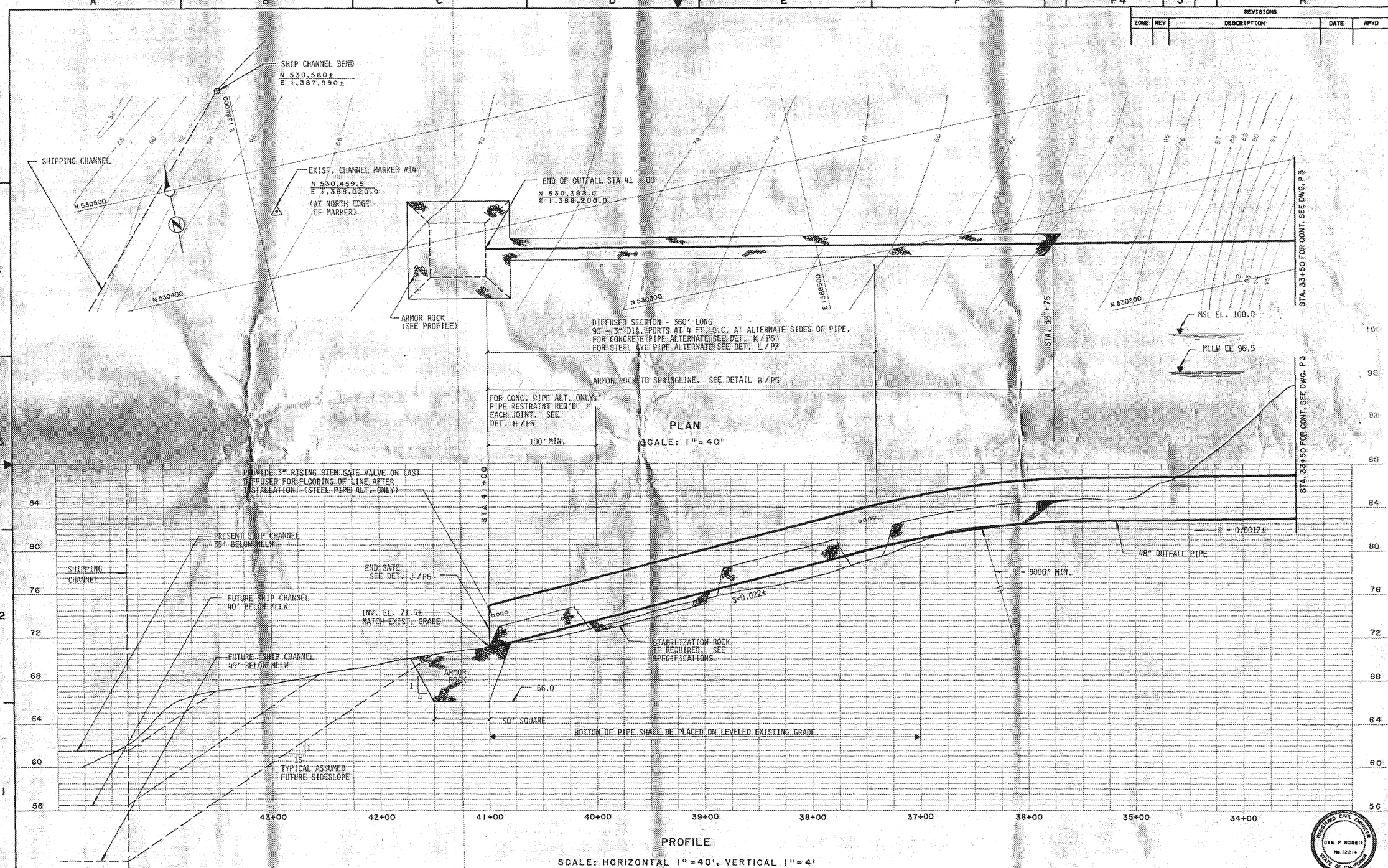

REGISTERED CIVIL ENGINEER DAN P. NORRIS No. 12214 STATE OF CALIFORNIA

BROWN AND CALDWELL
CONSULTING ENGINEERS
EUGENE OREGON

DESIGNED WTJ
CHECKED DPN
CHECKED

SUBMITTED William James DATE 10/16/81
APPROVED Dan P. Norris DATE 10/16/81
For Brown and Caldwell
APPROVED DATE

FILE 850
DATE NOV 81

CITY OF EUREKA, CALIFORNIA
GREATER EUREKA AREA
WASTEWATER TREATMENT PLANT

HUMBOLDT BAY OUTFALL
PLAN AND PROFILE STA 33+50 TO STA 41+00

DRAWING NUMBER P4
SHEET 5 D

BCD6P8

ED_006495_00001877-00018

DWG NO P6 SH 7

REVISIONS				
ZONE	REV	DESCRIPTION	DATE	APVD

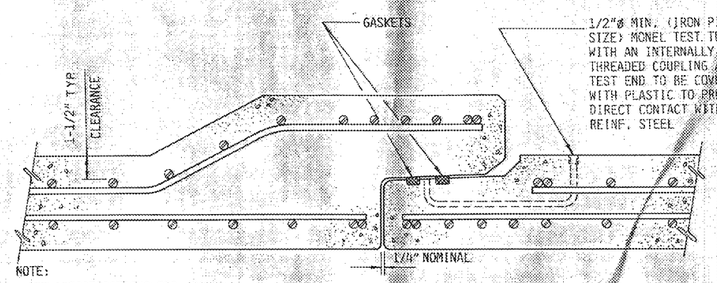

NOTE:
SEE SPECIFICATIONS FOR JOINT DESIGN REQUIREMENTS. DETAILS OF REINFORCING SHALL BE AS NECESSARY TO PASS JOINT SHEAR TEST.

TYPICAL JOINT (RCP) DETAIL F/P6
NO SCALE

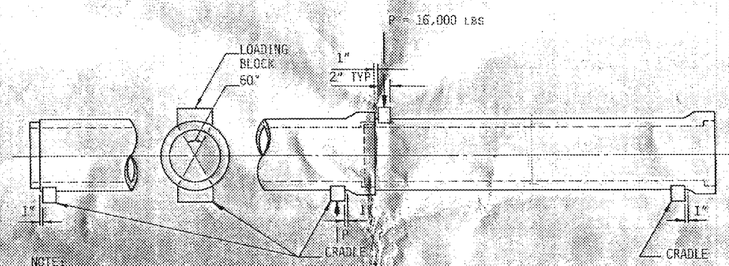

NOTE:
SEE SPECIFICATIONS FOR TESTING.

JOINT SHEAR TEST (RCP) DETAIL G/P6
NO SCALE

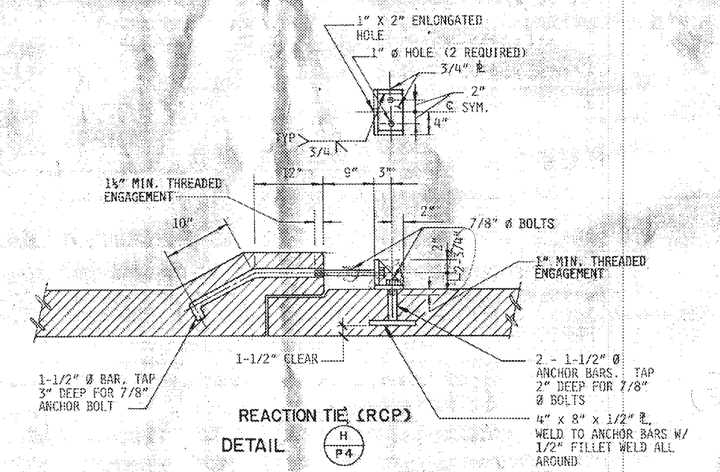

REACTION TIE (RCP) DETAIL H/P4
SCALE: 1" = 1'-0

NOTE:
ALL METAL WORK SHALL BE MONEL. LOCATE REACTION TIES AT SPRING LINE, TWO PER JOINT.

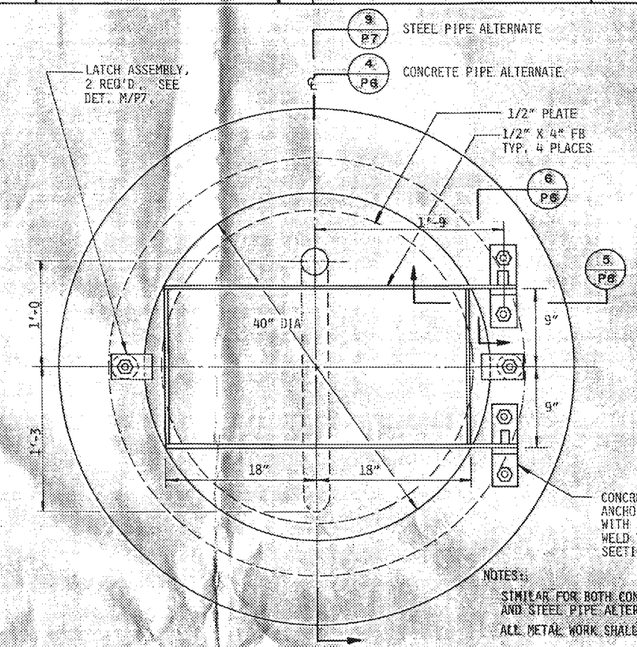

NOTES:
SIMILAR FOR BOTH CONCRETE AND STEEL PIPE ALTERNATES.
ALL METAL WORK SHALL BE MONEL.

ACCESS GATE DETAIL J/P4
SCALE: 1-1/2" = 1'-0

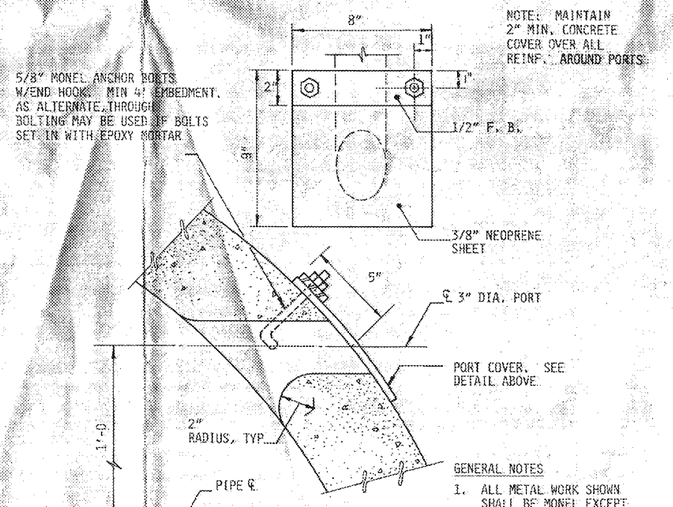

NOTE: MAINTAIN 2" MIN. CONCRETE COVER OVER ALL REINF. AROUND PORTS.

GENERAL NOTES
1. ALL METAL WORK SHOWN SHALL BE MONEL EXCEPT FOR REINFORCING STEEL.

DIFFUSER PORT (RCP ALT) DETAIL K/P4
SCALE: 3" = 1'-0

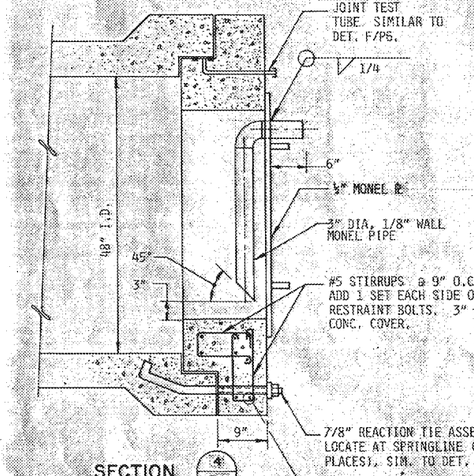

SECTION 4/P6
SCALE: 1" = 1'-0

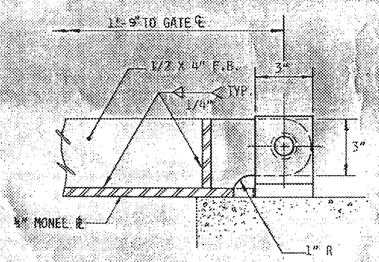

SECTION 3/P6
SCALE: 3" = 1'-0

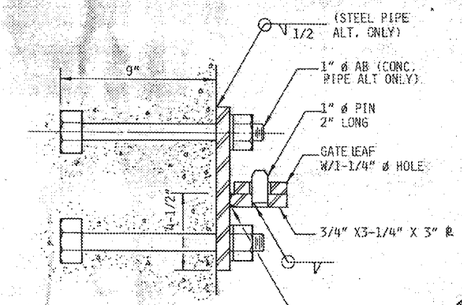

SECTION 6/P6
SCALE: 3" = 1'-0

REGISTERED CIVIL ENGINEER DAN P. MORRIS No. 12214 STATE OF CALIFORNIA

BROWN AND CALDWELL CONSULTING ENGINEERS EUGENE OREGON	DESIGNED WTJ CHECKED DPM CHECKED	SUBMITTED DATE 10/16/81 APPROVED DATE 10/16/81 For Brown and Caldwell APPROVED DATE	FILE 880 DATE NOV 81	CITY OF EUREKA, CALIFORNIA GREATER EUREKA AREA WASTEWATER TREATMENT PLANT	HUMBOLDT BAY OUTFALL SECTIONS AND DETAILS	DRAWING NUMBER P6 SHEET 7 D

BCDBFB

ED_006495_00001877-00019

ITEM	QTY.	DESCRIPTION	MATERIAL
1	1	WIDE BILL TIDEFLEX DIFFUSER	NEOPRENE
2	1	RETAINING RING	AL6XN OR 2205 SUPER DUPLEX
3	4	3/8" CONCRETE DROP IN ANCHOR W/ FASTENER	AL6XN OR 2205 SUPER DUPLEX

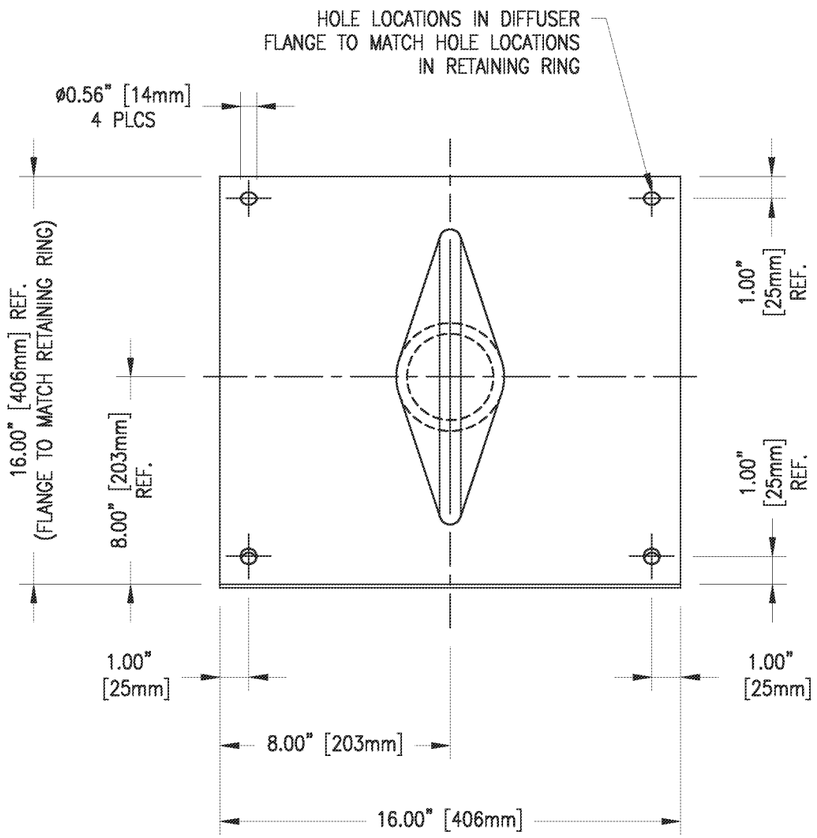

RETAINING RING NOT SHOWN FOR CLARITY

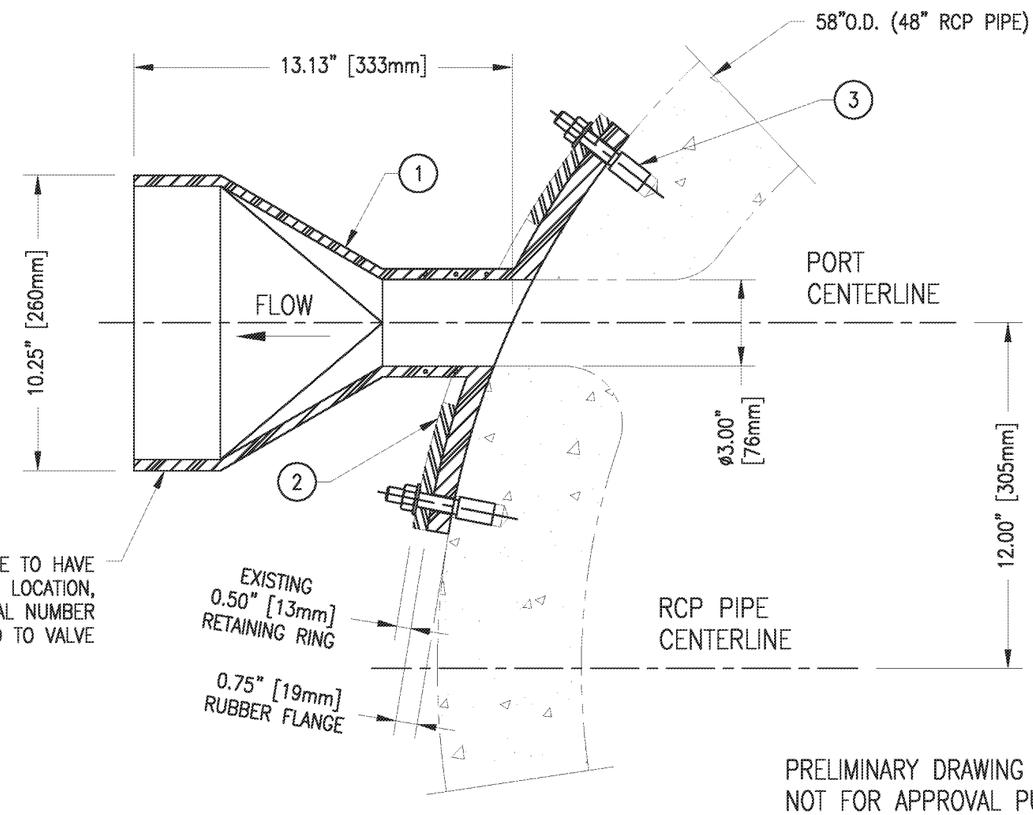

PRELIMINARY DRAWING
NOT FOR APPROVAL PURPOSES

PROJECT: ELK RIVER WWTP OUTFALL DIFFUSER RETROFIT
CITY OF EUREKA, CA

CUSTOMER:

ORDER No:

PROPRIETARY NOTICE

THIS DOCUMENT CONTAINS PROPRIETARY INFORMATION OF TIDEFLEX TECHNOLOGIES. IT IS LOANED BY TIDEFLEX TECHNOLOGIES, SUBJECT TO THE CONDITIONS THAT IT AND THE INFORMATION EMBODIED THEREIN SHALL BE USED ONLY FOR RECORD AND REFERENCE PURPOSES. IT SHALL NOT BE USED OR CAUSED TO BE USED IN ANY WAY PREJUDICIAL TO THE INTERESTS OF TIDEFLEX TECHNOLOGIES. IT SHALL NOT BE REPRODUCED OR COPIED IN WHOLE OR PART, OR DISCLOSED TO ANYONE WITHOUT THE DIRECT WRITTEN PERMISSION OF TIDEFLEX TECHNOLOGIES AND SHALL BE RETURNED UPON REQUEST.

OPPORTUNITY No:

SALES ORDER No:

Tideflex® Technologies
A Division of Red Valve Company, Inc.

600 N. BELL AVE.
CARNEGIE, PA. 15106
info@tideflex.com
412.279.0044
fax 412.279.5410

TT PRODUCT: 3" SERIES 35WSQ DIFFUSER, W/SQ. FLG.

TT PART No: 35WSQ-030-APPROVAL

DR. BY: TLM DATE: 3-6-19 CHKD. BY: DATE:

CAD SCALE: FULL

PLOT SCALE: 1 = 1

DWG No: TTS-42848

REV

Attachment B: Detailed UM3 Model Input and Output Data

DRAFT for review purposes only. Use of contents on this sheet is subject to the limitations specified at the beginning of this document.
Effluent Mixing Draft TM 2019-11-26.docx

This page intentionally left blank.

DRAFT for review purposes only. Use of contents on this sheet is subject to the limitations specified at the beginning of this document.
Effluent Mixing Draft TM 2019-11-26 docx

ED_006495_00001877-00022

Eureka Model Run: 6mgd

Ambient Table:

Depth m	Amb-cur m/s	Amb-dir deg	Amb-sal psu	Amb-tem C	Amb-pol kg/kg	Decay s-1	Far-spd m/s	Far-dir deg	Disprsn m0.67/s2	Density sigma-T
0.0	0.0	0.0	34.00	15.00	0.0	0.0	-	-	0.0003	25.22390
1.219	0.0	0.0	34.00	15.00	0.0	0.0	-	-	0.0003	25.22390
2.438	0.0	0.0	34.00	15.00	0.0	0.0	-	-	0.0003	25.22390
3.658	0.0	0.0	34.00	15.00	0.0	0.0	-	-	0.0003	25.22390
4.877	0.0	0.0	34.00	15.00	0.0	0.0	-	-	0.0003	25.22390
6.096	0.0	0.0	34.00	15.00	0.0	0.0	-	-	0.0003	25.22390
7.315	0.0	0.0	34.00	15.00	0.0	0.0	-	-	0.0003	25.22390

Diffuser table:

P-dia (in)	Ver angl (deg)	H-Angle (deg)	SourceX (m)	SourceY (m)	Ports ()	Spacing (ft)	MZ-dis (ft)	Isoplth (concent)	P-depth (ft)	Ttl-flo (MGD)	Eff-sal (psu)	Temp (C)	Polutnt (%)
1.900	0.0	0.0	0.0	0.0	90	4.00	30.00	0.0	25.0	6.00	0.0	20.00	100.00

Simulation:

Step	Depth (ft)	Amb-cur (cm/s)	P-dia (in)	Polutnt (%)	Dilutn ()	x-posn (ft)	y-posn (ft)	Time (s)	Iso dia (m)	
0	25.00	0.001	1.900	100.0	1.000	0.0	0.0	0.0	0.0;	
1	25.00	0.0	1.937	96.18	1.040	0.0151	0.0	0.003	0.04921;	bottom hit;
30	25.00	0.0	3.456	54.77	1.826	0.324	0.0	0.0892	0.08777;	
60	24.98	0.0	6.234	30.43	3.286	0.901	0.0	0.378	0.1583;	
90	24.86	0.0	10.65	17.76	5.631	1.819	0.0	1.182	0.2705;	
120	24.66	0.0	14.21	13.09	7.639	2.577	0.0	2.168	0.3609;	
150	24.37	0.0	17.14	10.52	9.509	3.230	0.0	3.264	0.4354;	
180	23.97	0.0	19.83	8.677	11.53	3.854	0.0	4.548	0.5037;	
210	23.41	0.0	22.57	7.153	13.98	4.496	0.0	6.151	0.5733;	
240	22.57	0.0	25.72	5.756	17.37	5.202	0.0	8.315	0.6533;	
270	21.23	0.0	30.00	4.386	22.80	6.031	0.0	11.56	0.7620;	
300	18.77	0.0	37.16	2.990	33.45	7.082	0.0	17.30	0.9439;	
325	14.77	0.0	48.48	1.875	53.33	8.203	0.0	26.70	1.2313;	merging;
330	13.62	0.0	51.33	1.698	58.88	8.452	0.0	29.47	1.3037;	
360	2.728	0.0	73.95	0.938	106.6	10.06	0.0	55.12	1.8784;	
361	2.234	0.0	74.96	0.919	108.8	10.12	0.0	56.27	1.9041;	matched energy radial vel =

Eureka Model Run: 30mgd

Ambient Table:

Depth m	Amb-cur m/s	Amb-dir deg	Amb-sal psu	Amb-tem C	Amb-pol kg/kg	Decay s-1	Far-spd m/s	Far-dir deg	Disprsn m0.67/s2	Density sigma-T
0.0	0.0	0.0	34.00	15.00	0.0	0.0	-	-	0.0003	25.22390
1.219	0.0	0.0	34.00	15.00	0.0	0.0	-	-	0.0003	25.22390
2.438	0.0	0.0	34.00	15.00	0.0	0.0	-	-	0.0003	25.22390
3.658	0.0	0.0	34.00	15.00	0.0	0.0	-	-	0.0003	25.22390
4.877	0.0	0.0	34.00	15.00	0.0	0.0	-	-	0.0003	25.22390
6.096	0.0	0.0	34.00	15.00	0.0	0.0	-	-	0.0003	25.22390
7.315	0.0	0.0	34.00	15.00	0.0	0.0	-	-	0.0003	25.22390

Diffuser table:

P-dia (in)	Ver angl (deg)	H-Angle (deg)	SourceX (m)	SourceY (m)	Ports ()	Spacing (ft)	MZ-dis (ft)	Isoplth (concent)	P-depth (ft)	Ttl-flo (MGD)	Eff-sal (psu)	Temp (C)	Polutnt (%)
2.900	0.0	0.0	0.0	0.0	90	4.00	30.00	0.0	25.0	30.00	0.0	20.00	100.00

Step	Depth (ft)	Amb-cur (cm/s)	P-dia (in)	Polutnt (%)	Dilutn ()	x-posn (ft)	y-posn (ft)	Time (s)	Iso dia (m)	
0	25.00	0.001	2.900	100.0	1.000	0.0	0.0	0.0	0.07366;	
1	25.00	0.0	2.980	94.72	1.056	0.0319	0.0	0.003	0.07569;	bottom hit;
30	25.00	0.0	5.358	53.93	1.854	0.512	0.0	0.0663	0.1361;	
60	24.99	0.0	9.674	29.96	3.338	1.406	0.0	0.278	0.2457;	
90	24.91	0.0	17.47	16.60	6.025	3.028	0.0	0.975	0.4438;	
120	24.57	0.0	29.25	9.866	10.14	5.482	0.0	2.794	0.7430;	
150	23.99	0.0	38.47	7.362	13.58	7.454	0.0	4.933	0.9771;	
180	23.19	0.0	46.16	5.934	16.85	9.175	0.0	7.325	1.1725;	
188	22.93	0.0	48.09	5.632	17.76	9.618	0.0	8.026	1.2215;	merging;
210	22.08	0.0	52.78	4.986	20.05	10.84	0.0	10.15	1.3407;	
240	20.45	0.0	58.78	4.266	23.44	12.63	0.0	13.70	1.4930;	
270	17.91	0.0	65.53	3.584	27.90	14.70	0.0	18.56	1.6644;	
300	13.53	0.0	75.12	2.869	34.85	17.29	0.0	25.96	1.9081;	
330	4.729	0.0	93.21	2.077	48.14	20.85	0.0	39.37	2.3676;	
334	2.876	0.0	97.02	1.965	50.90	21.44	0.0	42.07	2.4643;	matched energy radial vel =