Wortman, Eric

From: Wortman, Eric
Sent: Monday, January 8, 2018 8:02 AM
To: Wortman, Eric
Subject: Notice of Public Comment Period – Proposed Permits to Construct on the Uintah and Ouray Indian Reservation
Attachments: Bulletin Board Notice - Anadarko SMNSR CD Transfer Permits - Mulitple Fa....pdf

In accordance with the regulations at 40 CFR 49.157 and 49.158, the EPA is hereby providing notification of the availability for public comment of the proposed Clean Air Act synthetic minor New Source Review permits for the following six (6) sources located on Indian country lands within the Uintah and Ouray Indian Reservation:

- Anadarko Uintah Midstream, LLC - East Bench Compressor Station;
- Anadarko Uintah Midstream, LLC - Sage Grouse Compressor Station;
- Anadarko Uintah Midstream, LLC - North East Compressor Station;
- Anadarko Uintah Midstream, LLC - North Compressor Station;
- Anadarko Uintah Midstream, LLC - Archie Bench Compressor Station; and
- Anadarko Uintah Midstream, LLC - Bitter Creek Compressor Station.

Electronic copies of the proposed permits, technical support documents, applications and other supporting permit information will be available online at http://www.epa.gov/caa-permitting/caa-permit-public-comment-opportunities-region-8.

Paper copies of the proposed permits, technical support documents, applications, and other supporting permit information may be reviewed by contacting the Federal and/or Tribal contacts identified on the attached public notice bulletin.

Comments may be sent by mail to:

U.S. EPA Region 8
Air Program Office
1595 Wynkoop Street, 8P-AR
Denver, CO 80202
Attn: Tribal NSR Coordinator

or

Electronically to R8AirPermitting@epa.gov

In accordance with the regulations at §49.157, the Agency is providing a 30-day period from January 8, 2018 to February 7, 2018 for public comment on these proposed permits. Comments must be received by 5:00 pm MT February 7, 2018, to be considered in the issuance of the final permits. If a public hearing is held regarding any of these permits, you will be sent a copy of the public hearing notice at least 30 days in advance of the hearing date.

Eric Wortman | Environmental Scientist
U.S. Environmental Protection Agency
1595 Wynkoop Street (8P-AR)

Denver, Colorado 80202
Telephone: (617) 918-1624 | Email: wortman.eric@epa.gov

Wortman, Eric

From: Wortman, Eric
Sent: Monday, January 8, 2018 7:59 AM
To: 'mike.weaver@anadarko.com'
Cc: 'natalie.ohlhausen@anadarko.com'; 'Bruce Pargeets'; minnieg@utetribe.com; Smith, Claudia; Fallon, Gail
Subject: Proposed Synthetic Minor NSR Permits for Multiple Facilities on the Uintah & Ouray Indian Reservation
Attachments: Bulletin Board Notice - Anadarko SMNSR CD Transfer Permits - Mulitple Fa....pdf; Anadarko Archie Bench CS TSD SMNSR-UO-000817-2016.001.pdf; Anadarko Archie Bench CS Proposed Permit SMNSR-UO-000817-2016.001.pdf; Anadarko Bitter Creek CS Proposed Permit SMNSR-UO-000818-2016.001.pdf; Anadarko Bitter Creek CS TSD SMNSR-UO-000818-2016.001.pdf; Anadarko East Bench CS TSD SMNSR-UO-000824-2016.001.pdf; Anadarko East Bench CS Proposed Permit SMNSR-UO-000824-2016.001.pdf; Anadarko North CS TSD SMNSR-UO-000071-2016.001.pdf; Anadarko North CS Proposed Permit SMNSR-UO-000071-2016.001.pdf; Anadarko North East CS Proposed Permit SMNSR-UO-001874-2016.001.pdf; Anadarko North East CS TSD SMNSR-UO-001874-2016.001.pdf; Anadarko Sage Grouse CS TSD SMNSR-UO-001875-2016.001.pdf; Anadarko Sage Grouse CS Proposed Permit SMNSR-UO-001875-2016.001.pdf

I have attached the requested proposed permits, the accompanying technical support documents, and the bulletin board notice for six (6) facilities located on Indian country lands within the Uintah & Ouray Indian Reservation. We will also be posting the proposed permits, technical support documents, applications and other supporting permit information in PDF format on our website at http://www.epa.gov/caa-permitting/caa-permit-public-comment-opportunities-region-8. The six (6) facilities are listed below.

- East Bench Compressor Station - Permit # SMNSR-UO-000824-2016.001;
- Sage Grouse Compressor Station - Permit # SMNSR-UO-001875-2016.001;
- North East Compressor Station - Permit # SMNSR-UO-001874-2016.001;
- North Compressor Station - Permit # SMNSR-UO-000071-2016.001;
- Archie Bench Compressor Station - Permit # SMNSR-UO-000817-2016.001; and
- Bitter Creek Compressor Station - Permit # SMNSR-UO-000818-2016.001.

In accordance with the regulations at 40 CFR 49.157 and 49.158, we are providing a 30-day period from January 8, 2018 to February 7, 2018 for public comment on these proposed permits. Comments must be received by 5:00 pm MT February 7, 2018, to be considered in the issuance of the final permits.

Please submit any written comments you may have concerning the terms and conditions of the proposed permits. You can send them directly to me at wortman.eric@epa.gov, or to r8airpermitting@epa.gov. Should the EPA not accept any or all of these comments, you will be notified in writing and will be provided with the reasons for not accepting them.

Thank you,

Eric

Eric Wortman | Environmental Scientist
U.S. Environmental Protection Agency
1595 Wynkoop Street (8P-AR)

Denver, Colorado 80202
Telephone: (617) 918-1624 | Email: wortman.eric@epa.gov

UNITED STATES ENVIRONMENTAL PROTECTION AGENCY
REGION 8
1595 Wynkoop Street
Denver, CO 80202-1129
Phone 800-227-8917
www.epa.gov/region8

JAN 03 2018

Ref: 8P-AR

Ms. Minnie Grant
Air Coordinator, Energy, Minerals, & Air
Energy and Minerals Department, Ute Indian Tribe
P.O. Box 70
Fort Duchesne, Utah 84026

Re: Anadarko Uintah Midstream, LLC, Proposed Synthetic Minor New Source Review Permits for Multiple Facilities

Dear Ms. Grant:

The U.S. Environmental Protection Agency Region 8 is proposing to issue a synthetic minor permit for the six (6) facilities owned and operated by Anadarko Uintah Midstream, LLC and located within the exterior boundaries on the Uintah and Ouray Indian Reservation. The six (6) facilities are listed below.

- East Bench Compressor Station - Permit # SMNSR-UO-000824-2016.001;
- Sage Grouse Compressor Station - Permit # SMNSR-UO-001875-2016.001;
- North East Compressor Station - Permit # SMNSR-UO-001874-2016.001;
- North Compressor Station - Permit # SMNSR-UO-000071-2016.001;
- Archie Bench Compressor Station - Permit # SMNSR-UO-000817-2016.001; and
- Bitter Creek Compressor Station - Permit # SMNSR-UO-000818-2016.001.

As requested by Anadarko, these permits would incorporate enforceable requirements originally established in a March 27, 2008, Federal Consent Decree between the United States of America (Plaintiff), various Plaintiff Intervenors, and Kerr-McGee Corporation (Civil Action No. 07-CV-01034-EWN-KMT). These permits would not authorize the construction of any new emissions sources, or emissions increases from existing units, nor would they otherwise authorize any other physical modifications to the facilities or their operations. These permits are only intended to incorporate requested emission limits and provisions from the permit applications for existing emissions units operating at the facility.

A public comment period for the proposed permits will begin on January 8, 2018, and end on February 7, 2018.

We have enclosed a CD and paper copy containing the proposed permits and supporting documentation, and we ask that you please make this material available for public review until the end of the public comment period. In addition, we have provided copies of the bulletin board public notice announcement and would appreciate it if you could post this announcement in prominent locations in your area. All of these documents will also be available for review in electronic format on our website at: https://www.epa.gov/caa-permitting/caa-permit-public-comment-opportunities-region-8.

Thank you for your assistance in this matter. Should you have any questions regarding our request, you may contact Eric Wortman of my staff at (617) 918-1624.

Sincerely,

Gail L. Fallon
Acting Air Permitting, Monitoring, and
Modelling Unit Chief

Enclosures

cc: Bruce Pargeets, Director, Energy, Minerals, and Air, Ute Indian Tribe (w/o enclosures)

MEMO TO FILE

DATE: November 28, 2017

SUBJECT: Uintah and Ouray Indian Reservation, North East Compressor Station; Anadarko Uintah Midstream, LLC., Environmental Justice

FROM: Eric Wortman, EPA Region 8 Air Program

TO: Source Files:
205c AirTribal, UO, Anadarko Uintah Midstream, LLC. North East Compressor Station
SMNSR-UO-001874-2016.001, 11/8/2016
FRED # 108052

On February 11, 1994, the President issued Executive Order 12898, entitled "Federal Actions to Address Environmental Justice in Minority Populations and Low-Income Populations." The Executive Order calls on each federal agency to make environmental justice a part of its mission by "identifying and addressing, as appropriate, disproportionately high and adverse human health or environmental effects of its programs, policies and activities on minority populations and low-income populations."

The EPA defines "Environmental Justice" as the fair treatment and meaningful involvement of all people regardless of race, color, national origin, or income with respect to the development, implementation, and enforcement of environmental laws, regulations, and polices. The EPA's goal with respect to Environmental Justice in permitting is to enable overburdened communities to have full and meaningful access to the permitting process and to develop permits that address environmental justice issues to the greatest extent practicable under existing environmental laws. *Overburdened* is used to describe the minority, low-income, tribal and indigenous populations or communities in the United States that potentially experience disproportionate environmental harms and risks as a result of greater vulnerability to environmental hazards.

This discussion describes our assessment of the potential environmental impacts to overburdened communities in connection with issuing this permit in Uintah County, Utah, within the exterior boundaries of the Uintah and Ouray Indian Reservation, and describes our efforts at meaningful public involvement in the permit issuance process.

As described in the following sections of this memorandum, we conclude that issuance of the aforementioned permit is not expected to have disproportionately high or adverse human health effects on overburdened or any communities in the vicinity of the facility.

Permit Request

The EPA received an application from Anadarko Uintah Midstream, LLC (Anadarko) for a synthetic minor permit for the existing North East Compressor Station in accordance with the requirements of the Tribal Minor New Source Review (MNSR) Permit Program at 40 CFR Part 49.

This permit would not authorize the construction of any new emission sources, or emission increases from existing units, nor would it otherwise authorize any other physical modifications to the facility or its operations. This permit is only intended to incorporate required and requested enforceable emission limits and operational restrictions from a March 27, 2008, Federal Consent Decree (CD) between the United States of America (Plaintiff), and the State of Colorado, the Rocky Mountain Clean Air Action and the Natural Resources Defense Council (Plaintiff-Intervenors), and Kerr-McGee Corporation (Civil Action No. 07-CV-01034-EWN-KMT), and the November 8, 2016 synthetic MNSR application. Anadarko has requested legally and practically enforceable requirements for the installation and operation of a catalytic control system on two (2) field gas-fired 4-stroke lean-burn (4SLB) reciprocating internal combustion engines (used for field gas compression at the facility), including associated carbon monoxide (CO) control efficiency requirements, consistent with the CD. Anadarko also requested an enforceable requirement to install and operate only low-bleed, no-bleed, or instrument air-driven pneumatic controllers, consistent with the CD.

Upon compliance with this permit, Anadarko will have legally and practically enforceable restrictions on emissions that can be used when determining the applicability of other CAA permitting requirements, such as under the Prevention of Significant Deterioration Permit Program at 40 CFR Part 52 and the Title V Operating Permit Program at 40 CFR Part 71. The EPA has determined that issuance of this MNSR permit will not contribute to National Ambient Air Quality Standards (NAAQS) violations, or have potentially adverse effects on ambient air quality.

The facility is located at:

Sec 10 T9S R21E
40.051840N, Longitude -109.541273W

Air Quality Review

The MNSR regulations at 40 CFR 49.154(d) require that an Air Quality Impact Assessment (AQIA) modeling analysis be performed if there is reason to be concerned that new construction would cause or contribute to a National Ambient Air Quality Standard (NAAQS) or PSD increment violation. If an AQIA reveals that the proposed construction could cause or contribute to a NAAQS or PSD increment violation, such impacts must be addressed before a pre-construction permit can be issued. Because the permit actions do not authorize the construction of any new emission sources, or emission increases from existing units we have determined that an AQIA modeling analysis is not required for this action.

For purposes of Executive Order 12898 on environmental justice, the EPA has recognized that compliance with the NAAQS is "emblematic of achieving a level of public health protection that, based on the level of protection afforded by a primary NAAQS, demonstrates that minority or low-income populations will not experience disproportionately high and adverse human health or environmental effects due to the exposure to relevant criteria pollutants." *In re Shell Gulf of Mexico, Inc. & Shell Offshore, Inc.*, 15 E.A.D., slip op. at 74 (EAB 2010). This is because the NAAQS are health-based standards, designed to protect public health with an adequate margin of safety, including sensitive populations such as children, the elderly, and asthmatics.

The EPA has determined that issuance of this MNSR permit will not contribute to National Ambient Air Quality Standards (NAAQS) violations, or have potentially adverse effects on ambient air quality.

Environmental Impacts to Potentially Overburdened Communities

This permit action would not authorize the construction of any new air emission sources, or air emission increases from existing units, nor does it otherwise authorize any other physical modifications to the associated facility or its operations. The air emissions at the existing facility will not increase due to the associated action.

Furthermore, the permit contains a provision stating, "*this MNSR permit will not contribute to National Ambient Air Quality Standards violations, or have potentially adverse effects on ambient air quality*." Noncompliance with this permit provision would be a violation of the permit and would be grounds for enforcement action and for permit termination or revocation. As a result, we conclude that issuance of the aforementioned permit will not have disproportionately high or adverse human health effects on any communities in the vicinity of the Uintah and Ouray Indian Reservation.

Tribal Consultation and Enhanced Public Participation

Given the presence of potentially overburdened communities in the vicinity of the facility, we are providing an enhanced public participation process for this permit.

1. Interested parties can subscribe to an EPA email list that notifies them of public comment opportunities on the Uintah and Ouray Indian Reservation for proposed air pollution control permits via email at https://www.epa.gov/caa-permitting/caa-permit-public-comment-opportunities-region-8.

2. All minor source applications (synthetic minor, modification to an existing facility, new true minor or general permit) are submitted to both the Tribe and us per the application instructions (see https://www.epa.gov/caa-permitting/tribal-nsr-permits-region-8).

3. The Tribe is asked to respond within 10 business days to us with questions and comments on the application.

4. In the event an AQIA is triggered, we email a copy of that document to the Tribe within 5 business days from the date we receive it.

5. We notify the Tribe of the public comment period for the proposed permit and provide copies of the notice of public comment opportunity to post in various locations of their choosing on the Reservation. We also notify the Tribe of the issuance of the final permit.

6. We offer tribal government leaders an opportunity to consult on all major and certain synthetic MNSR permit actions. This synthetic MNSR permit action incorporates existing requirements from the March 27, 2008 Consent Decree Civil Action No. 07-CV-01034-EWN-KMT and does not authorize any increase in emissions or new construction. Therefore, we did not offer the Ute Tribe the opportunity to consult on this action. However, the Ute Tribe may request consultation at any time.

MEMO TO FILE

DATE: November 28, 2017

SUBJECT: Uintah and Ouray Indian Reservation, North East Compressor Station; Anadarko Uintah Midstream, LLC., Endangered Species Act

FROM: Eric Wortman, EPA Region 8 Air Program

TO: Source Files:
205c AirTribal, UO, Anadarko Uintah Midstream, LLC. North East Compressor Station
SMNSR-UO-001874-2016.001, 11/8/2016
FRED # 108052

Pursuant to Section 7 of the Endangered Species Act (ESA), 16 U.S.C. §1536, and its implementing regulations at 50 CFR, part 402, the EPA is required to ensure that any action authorized, funded, or carried out by the Agency is not likely to jeopardize the continued existence of any Federally-listed threatened or endangered species (TES) or result in the destruction or adverse modification of such species' designated critical habitat. Under ESA, those agencies that authorize, fund, or carry out the federal action are commonly known as "action agencies." If an action agency determines that its federal action "may affect" listed species or critical habitat, it must consult with the U.S. Fish and Wildlife Service (FWS). If an action agency determines that the federal action will have no effect on listed species or critical habitat, the agency will make a "no effect" determination. In that case, the action agency does not initiate consultation with the FWS and its obligations under Section 7 are complete.

In complying with its duty under ESA, the EPA, as the action agency, examined the potential effects on listed species and designated critical habitat relating to issuing this Clean Air Act (CAA) synthetic minor New Source Review permit in Uintah County, Utah, on Indian country lands within the Uintah and Ouray Indian Reservation.

This memorandum describes EPA's efforts to assess potential effects on TES in connection with issuing this Clean Air Act (CAA) synthetic minor New Source Review permit in Uintah County, Utah, on Indian country lands within the Uintah and Ouray Indian Reservation. As explained further below, EPA has concluded that the proposed permit action will have "*No effect"* on listed TES or designated critical habitat.

Permit Request

The EPA received an application from Anadarko Uintah Midstream, LLC (Anadarko) for a synthetic minor permit for the existing North East Compressor Station in accordance with the requirements of the Tribal Minor New Source Review (MNSR) Permit Program at 40 CFR Part 49.

This permit would not authorize the construction of any new emission sources, or emission increases from existing units, nor would it otherwise authorize any other physical modifications to the facility or its operations. This permit is only intended to incorporate required and requested enforceable emission limits and operational restrictions from a March 27, 2008, Federal Consent Decree (CD) between the

United States of America (Plaintiff), and the State of Colorado, the Rocky Mountain Clean Air Action and the Natural Resources Defense Council (Plaintiff-Intervenors), and Kerr-McGee Corporation (Civil Action No. 07-CV-01034-EWN-KMT), and the November 8, 2016 synthetic MNSR application. Anadarko has requested legally and practically enforceable requirements for the installation and operation of a catalytic control system on two (2) field gas-fired 4-stroke lean-burn (4SLB) reciprocating internal combustion engines (used for field gas compression at the facility), including associated carbon monoxide (CO) control efficiency requirements, consistent with the CD. Anadarko also requested an enforceable requirement to install and operate only low-bleed, no-bleed, or instrument air-driven pneumatic controllers, consistent with the CD.

Upon compliance with this permit, Anadarko will have legally and practically enforceable restrictions on emissions that can be used when determining the applicability of other CAA permitting requirements, such as under the Prevention of Significant Deterioration Permit Program at 40 CFR Part 52 and the Title V Operating Permit Program at 40 CFR Part 71. The EPA has determined that issuance of this MNSR permit will not contribute to National Ambient Air Quality Standards (NAAQS) violations, or have potentially adverse effects on ambient air quality.

The facility is located at:

Sec 10 T9S R21E
40.051840N, Longitude -109.541273W

Conclusion

The EPA has concluded that the proposed synthetic minor NSR permit action will have "*No effect"* on listed TES or designated critical habitat. This proposed permit action does not authorize the construction of any new emission sources, or emission increases from existing units, nor does it otherwise authorize any other physical modifications to the associated facility or its operations. The emissions, approved at present, from the existing facility will not increase due to the associated permit action. Because the EPA has determined that the federal action will have no effect on TES or designated critical habitat, the agency has made a *"No effect"* determination. Therefore, the EPA did not initiate consultation with the FWS and our obligations under Section 7 are complete.

MEMO TO FILE

November 28, 2017

SUBJECT: Uintah and Ouray Indian Reservation, North East Compressor Station; Anadarko Uintah Midstream, LLC., National Historical Preservation Act

FROM: Eric Wortman, EPA Region 8 Air Program

TO: Source Files:
205c AirTribal, UO, Anadarko Uintah Midstream, LLC. North East Compressor Station
SMNSR-UO-001874-2016.001, 11/8/2016
FRED # 108052

Section 106 of the National Historic Preservation Act (NHPA) requires federal agencies to take into account the effects of their undertakings on historic properties and afford the Advisory Council on Historic Preservation (ACHP) a reasonable opportunity to comment with regard to such undertakings. Under the ACHP's implementing regulations at 36 C.F.R. Part 800, Section 106 consultation is generally with state and tribal historic preservation officials in the first instance, with opportunities for the ACHP to become directly involved in certain cases. An "undertaking" is "a project, activity, or program funded in whole or in part under the direct or indirect jurisdiction of a Federal agency, including those carried out by or on behalf of a Federal agency; those carried out with Federal financial assistance; and those requiring a Federal permit, license or approval." 36 C.F.R. § 800.16(y).

Under the NHPA Section 106 implementing regulations, if an undertaking is a type of activity that has the potential to cause effects on historic properties, assuming any are present, then federal agencies consult with relevant historic preservation partners to determine the area of potential effect (APE) of the undertaking, to identify historic properties that may exist in that area, and to assess and address any adverse effects that may be caused on historic properties by the undertaking. If an undertaking is a type of activity that does not have the potential to cause effects on historic properties, the federal agency has no further obligations. 36 C.F.R. § 800.3(a)(1).

This memorandum describes EPA's efforts to assess potential effects on historic properties in connection with issuing this Clean Air Act (CAA) synthetic minor New Source Review permit in Uintah County, Utah, on Indian country lands within the Uintah and Ouray Indian Reservation. As explained further below, EPA is finding that the proposed action does not have the potential to cause effects on historic properties, even assuming such historic properties are present.

Permit Request

The EPA received an application from Anadarko Uintah Midstream, LLC (Anadarko) for a synthetic minor permit for the existing North East Compressor Station in accordance with the requirements of the Tribal Minor New Source Review (MNSR) Permit Program at 40 CFR Part 49.

This permit would not authorize the construction of any new emission sources, or emission increases from existing units, nor would it otherwise authorize any other physical modifications to the facility or its operations. This permit is only intended to incorporate required and requested enforceable emission limits and operational restrictions from a March 27, 2008, Federal Consent Decree (CD) between the United States of America (Plaintiff), and the State of Colorado, the Rocky Mountain Clean Air Action and the Natural Resources Defense Council (Plaintiff-Intervenors), and Kerr-McGee Corporation (Civil Action No. 07-CV-01034-EWN-KMT), and the November 8, 2016 synthetic MNSR application. Anadarko has requested legally and practically enforceable requirements for the installation and operation of a catalytic control system on two (2) field gas-fired 4-stroke lean-burn (4SLB) reciprocating internal combustion engines (used for field gas compression at the facility), including associated carbon monoxide (CO) control efficiency requirements, consistent with the CD. Anadarko also requested an enforceable requirement to install and operate only low-bleed, no-bleed, or instrument air-driven pneumatic controllers, consistent with the CD.

Upon compliance with this permit, Anadarko will have legally and practically enforceable restrictions on emissions that can be used when determining the applicability of other CAA permitting requirements, such as under the Prevention of Significant Deterioration Permit Program at 40 CFR Part 52 and the Title V Operating Permit Program at 40 CFR Part 71. The EPA has determined that issuance of this MNSR permit will not contribute to National Ambient Air Quality Standards (NAAQS) violations, or have potentially adverse effects on ambient air quality.

The facility is located at:

Sec 10 T9S R21E
40.051840N, Longitude -109.541273W

Finding of No Historic Properties Affected

The EPA has reviewed the proposed actions for potential impacts on historic properties. Because the activities authorized by the EPA permit does not authorize the construction of any new emission sources, or emission increases from existing units, nor does it otherwise authorize any other physical modifications to the facility or its operations, the Agency finds that this permit action will have no effect on historic properties, even assuming any are present.

State and Tribal Consultation

Because this undertaking is a type of activity that does not have the potential to cause effects on historic properties, the EPA has no further obligations under Section 106 of the National Historic Preservation Act or 36 C.F.R. part 800.

Wortman, Eric

From: Ohlhausen, Natalie <Natalie.Ohlhausen@anadarko.com>
Sent: Thursday, December 7, 2017 4:24 PM
To: Wortman, Eric
Cc: Smith, Claudia
Subject: RE: Syn Minor NSR Permit Applications - Multiple Facilities on U&O Reservation

Eric,

I provided responses in blue below. Please let me know if you have any questions.

Thank you,

Natalie Ohlhausen
Direct: 720-929-6498
Mobile: 281-785-8929

From: Wortman, Eric [mailto:Wortman.Eric@epa.gov]
Sent: Friday, December 01, 2017 12:18 PM
To: Ohlhausen, Natalie <Natalie.Ohlhausen@anadarko.com>
Cc: Smith, Claudia <Smith.Claudia@epa.gov>
Subject: Syn Minor NSR Permit Applications - Multiple Facilities on U&O Reservation

Hi Natalie,

In addition to questions I sent you on 11/15 for the Sage Grouse CS syn minor permit application, I have reviewed the permit applications for several other actions and have a few questions. It would be great to get these sometime next week if possible, but no later than Friday, December 15th. Once I have this information, I can finalize the proposed permits and start preparing for public notice. I can be reached via email or at 617-918-1624 with any questions. Thanks. -Eric

Bitter Creek Compressor Station

- Appendix D of your application does not propose any VOC requirements for the two low-emission dehydrators at the facility. I assume you want the permit to include the enforceable restrictions for the two dehydrators at the facility (similar to White River and the CD). Please verify. – The dehy details were excluded in error. We do need enforceable restrictions for the two low emission dehys at Bitter Creek. I have attached the calculation pages for those units. Please let me know I you need more information.
- Please provide the MMscfd capacity for each of the dehydrators. The application did not include the emissions unit detail sheets for the two dehydrators. Each dehy is 70 MMscf
- The application indicates there are six H2S air strippers at the facility. Please send me a sentence or two about how these units fit in to the facility operations that I can include in the process description. Please verify that there are no emissions associated with these units (nothing in PTE tables). Bitter Creek compressor station has six gas to liquid H2S scrubbers. Each scrubber consists of a vertical vessel where gas is introduced to a H2S scavenger liquid that removes H2S from the gas stream prior to it being sent to the a gas plant. There is no PTE associated with these scrubbers.
- Please provide the capacity of the three condensate/produced water tanks. The tank size is not in the application. Additionally, the process description states that condensate is sent to the blowcase system and injected into the discharge line, but also states condensate is stored in the produced water tanks. Also, the facility diagram for the facility indicates there are 3 produced water tanks and 3 liquids storage tanks (six total

tanks). Can you clarify the liquids storage operations at the facility? Bitter Creek compressor station has 3 400bbl condensate storage tanks. Additionally, there is a blowcase system that allows low pressure condensate to be pressurized and injected into a pipeline. Condensate can either be stored or sent through the blowcase.

North East Compressor Station

- Please provide the capacity of the 2 condensate/produced water tanks. The tank size is not in the application. Each tank is 400bbl

North Compressor Station

- Please provide the capacity of the 2 condensate/produced water tanks. The tank size is not in the application. Additionally, the process description states that condensate is sent to the blowcase system and injected into the discharge line, but also states it is stored in the produced water tanks. Please clarify this discrepancy. – Each tank is 400bbl. Similar to the Bitter Creek station, North station has both condensate tanks and a blowcase system. Condensate can be stored or sent through the blowcase.

Archie Bench Compressor Station

- Please provide the capacity of the three condensate/produced water tanks. The tank size is not in the application. Additionally, the process description states that condensate is sent to the blowcase system and injected into the discharge line, but also states it is stored in the produced water tanks. Please clarify this discrepancy. – Archie bench has (1) 400bbl and (2) 300bbl condensate tanks. Similar to the Bitter Creek station, Archie Bench station has both condensate tanks and a blowcase system. Condensate can be stored or sent through the blowcase.
- The application indicates there are three H2S air strippers at the facility. Please send me a sentence or two about how these units fit in to the facility operations that I can include in the process description. Please verify that there are no emissions associated with these units (nothing in PTE tables). Archie Bench compressor station has three gas to liquid H2S scrubbers. Each scrubber consists of a vertical vessel where gas is introduced to a H2S scavenger liquid that removes H2S from the gas stream prior to it being sent to the a gas plant. There is no PTE associated with these scrubbers.

Sage Grouse (requested on 11/15)

- The application request a CO control requirement of 93% for engine SGG Gen 3 in accordance with the consent decree. However, this engine is only 125 hp and therefore doesn't appear to subject to the consent decree requirements in paragraph 41 and 50 for engines > 500 hp. The application also states this engine is subject to NSPS JJJJ. Please verify you are requesting the same control requirements (oxidation catalyst with 93% reduction) for SGG Gen 3 as the other 5 engines. – The generator is applicable to NSPS JJJJ so it should not have the same requirements as the 5 compressor engines at the facility.
- Please provide the capacity of the 3 condensate/produced water tanks. The tank size is not in the application. Each tank is 400bbl
- The application indicates there are three H2S air strippers at the facility. Please send me a sentence or two about how these units fit in to the facility operations that I can include in the process description. Please verify that there are no emissions associated with these units (nothing in PTE tables). Sage Grouse compressor station has three gas to liquid H2S scrubbers. Each scrubber consists of a vertical vessel where gas is introduced to a H2S scavenger liquid that removes H2S from the gas stream prior to it being sent to the a gas plant. There is no PTE associated with these scrubbers.

From: Wortman, Eric
Sent: Wednesday, November 15, 2017 11:32 AM
To: 'natalie.ohlhausen@anadarko.com' <natalie.ohlhausen@anadarko.com>
Cc: Smith, Claudia <Smith.Claudia@epa.gov>
Subject: Syn Minor NSR Permit - Sage Grouse CS

Hi Natalie,

I've reviewed the synthetic minor permit application for the Sage Grouse CS and have a few questions. Thanks – Eric

1. The application request a CO control requirement of 93% for engine SGG Gen 3 in accordance with the consent decree. However, this engine is only 125 hp and therefore doesn't appear to subject to the consent decree requirements in paragraph 41 and 50 for engines > 500 hp. The application also states this engine is subject to NSPS JJJJ. Please verify you are requesting the same control requirements (oxidation catalyst with 93% reduction) for SGG Gen 3 as the other 5 engines.

2. Please provide the capacity of the 3 condensate/produced water tanks. The tank size is not in the application.

3. The application indicates there are three H2S air strippers at the facility. Please send me a sentence or two about how these units fit in to the facility operations that I can include in the process description. Please verify that there are no emissions associated with these units (nothing in PTE tables).

_____

Eric Wortman | Environmental Scientist
U.S. Environmental Protection Agency
Telephone: (617) 918-1624 | Email: wortman.eric@epa.gov

Click here for Anadarko's Electronic Mail Disclaimer

SMNSR-UO-001874-2016.001

RECEIVED NOV 08 2016

Chipeta Processing LLC
P.O. Box 173779, Denver, Colorado 80217-3779
720-929-6000 Fax 720-929-7000

November 4, 2016

SENT VIA CERTIFIED MAIL No.: 7014 3490 0001 8054 0268

Ms. Claudia Smith
U.S. EPA, Region 8
1595 Wynkoop Street, 8P-AR
Denver, CO 80202-1129

RE: Synthetic Minor NSR Permit Application under Part 49
North East Compressor Station

Dear Ms. Smith:

Anadarko Uintah Midstream, LLC (Anadarko) is submitting the attached permit application under Part 49 Minor NSR rules for the North East Compressor Station located in Uintah County, Utah. Anadarko is submitting this minor source application to establish federally enforceable limits as required by the Civil Action No. 07–CV–01034–EWN–KMT (KMG Consent Decree).

The attached application contains the following:

- Appendix A: EPA Form New
- Appendix B: EPA Form SYNMIN
- Appendix C: Process Description, Flow Diagram, and Plot Plan
- Appendix D: Emission Unit and Emission Control Descriptions
- Appendix E: Emission Summary
- Appendix F: Detailed Emission Calculations
- Appendix G: Regulatory Analysis

Sincerely,

Anadarko Uintah Midstream, LLC

Natalie Ohlhausen
Sr. HSE Representative

Enclosures

Appendix A

Form NEW

(Application for New Construction)

OMB Control No. 2060-0003
Approval expires 04/30/2012

United States Environmental Protection Agency Program Address Phone Fax Web address	*Reviewing Authority* *Program* *Address* *Phone* *Fax* *Web address*

FEDERAL MINOR NEW SOURCE REVIEW PROGRAM IN INDIAN COUNTRY

Application for New Construction

(Form NEW)

Please check all that apply to show how you are using this form:

- ☐ **Proposed Construction of a New Source**
- ☐ **Proposed Construction of New Equipment at an Existing Source**
- ☐ **Proposed Modification of an Existing Source**
- ☒ **Other – Please Explain**

Existing Source operating under synthetic minor limits, as regulated under Consent Decree, submitting an application for a synthetic minor permit under Part 49.

Please submit information to:

Ms. Claudia Smith
U.S. EPA Region 8
1595 Wynkoop Street, 8P-AR
Denver, CO 80202-1129

A. GENERAL SOURCE INFORMATION

1. (a) **Company Name** Anadarko Uintah Midstream LLC (b) **Operator Name** Anadarko Uintah Midstream LLC	2. **Source Name** North East Compressor Station
3. Type of Operation Nat.Gas Compression & Transmission	4. Portable Source? ☐ Yes ☒ No 5. Temporary Source? ☐ Yes ☒ No
6. NAICS Code	7. SIC Code 1311
8. Physical Address (home base for portable sources)	

9. Reservation*	10. County*	11a. Latitude*	11b. Longitude*
Uintah and Ouray	Uintah	40.051840° N	-109.541273 °
12a. Quarter Quarter Section*	**12b. Section***	**12c. Township***	**12d. Range***
SE NW	10	9S	21E

*Provide all proposed locations of operation for portable sources

B. PREVIOUS PERMIT ACTIONS (Provide information in this format for each permit that has been issued to this source. Provide as an attachment if additional space is necessary)

Source Name on the Permit
Permit Number (xx-xxx-xxxxx-xxxx.xx)
Date of the Permit Action

Source Name on the Permit
Permit Number (xx-xxx-xxxxx-xxxx.xx)
Date of the Permit Action

Source Name on the Permit
Permit Number (xx-xxx-xxxxx-xxxx.xx)
Date of the Permit Action

Source Name on the Permit
Permit Number (xx-xxx-xxxxx-xxxx.xx)
Date of the Permit Action

Source Name on the Permit
Permit Number (xx-xxx-xxxxx-xxxx.xx)
Date of the Permit Action

C. CONTACT INFORMATION

Company Contact Mike Weaver	Title Midstream Operations Manager
Mailing Address P.O.Box 173779, Denver, CO 80202-3779	
Email Address Mike.Weaver@anadarko.com	
Telephone Number 720-929-6792	Facsimile Number
Operator Contact (if different from company contact) Andy Zeller	Title Plant Foreman
Mailing Address	
Email Address andy.zeller@anadarko.com	
Telephone Number 435-781-7001	Facsimile Number
Source Contact Natalie Ohlhausen	Title Sr. HSE Representative
Mailing Address P.O.Box 173779, Denver, CO 80202-3779	
Email Address Natalie.Ohlhausen@Anadarko.com	
Telephone Number 720-929-6498	Facsimile Number
Compliance Contact Same as Source Contact	Title
Mailing Address	
Email Address	
Telephone Number	Facsimile Number

D. ATTACHMENTS

Include all of the following information (see the attached instructions)

☒ **FORM SYNMIN** - New Source Review Synthetic Minor Limit Request Form, if synthetic minor limits are being requested.

☒ Narrative description of the proposed production processes. This description should follow the flow of the process flow diagram to be submitted with this application.

☒ Process flow chart identifying all proposed processing, combustion, handling, storage, and emission control equipment.

☒ A list and descriptions of all proposed emission units and air pollution-generating activities.

☒ Type and quantity of fuels, including sulfur content of fuels, proposed to be used on a daily, annual and maximum hourly basis.

☒ Type and quantity of raw materials used or final product produced proposed to be used on a daily, annual and maximum hourly basis.

☒ Proposed operating schedule, including number of hours per day, number of days per week and number of weeks per year.

☒ A list and description of all proposed emission controls, control efficiencies, emission limits, and monitoring for each emission unit and air pollution generating activity.

☒ **Criteria Pollutant Emissions** - Estimates of Current Actual Emissions, Current Allowable Emissions, Post-Change Uncontrolled Emissions, and Post-Change Allowable Emissions for the following air pollutants: particulate matter, PM_{10}, $PM_{2.5}$, sulfur oxides (SOx), nitrogen oxides (NOx), carbon monoxide (CO), volatile organic compound (VOC), lead (Pb) and lead compounds, fluorides (gaseous and particulate), sulfuric acid mist (H_2SO_4), hydrogen sulfide (H_2S), total reduced sulfur (TRS) and reduced sulfur compounds, including all calculations for the estimates.

These estimates are to be made for each emission unit, emission generating activity, and the project/source in total.

☐ **Modeling – Air Quality Impact Analysis (AQIA)**

☐ **ESA (Endangered Species Act)**

☐ **NHPA (National Historic Preservation Act)**

E. TABLE OF ESTIMATED EMISSIONS

The following tables provide the total emissions in tons/year for all pollutants from the calculations required in Section D of this form, as appropriate for the use specified at the top of the form.

E(i) – Proposed New Source

Pollutant	Potential Emissions (tpy)	Proposed Allowable Emissions (tpy)	
PM		0.0	PM - Particulate Matter PM_{10} - Particulate Matter less than 10 microns in size $PM_{2.5}$ - Particulate Matter less than 2.5 microns in size SOx - Sulfur Oxides NOx - Nitrogen Oxides CO - Carbon Monoxide VOC - Volatile Organic Compound Pb - Lead and lead compounds Fluorides - Gaseous and particulates H_2SO_4 - Sulfuric Acid Mist H_2S - Hydrogen Sulfide TRS - Total Reduced Sulfur RSC - Reduced Sulfur Compounds
PM_{10}		0.0	
$PM_{2.5}$		0.0	
SO_x			
NO_x		39.0	
CO		15.5	
VOC		8.4	
Pb			
CO2e		11589.2	
Fluorides			
H_2SO_4			
H_2S			
TRS			
RSC			

Emissions calculations must include fugitive emissions if the source is one the following listed sources, pursuant to CAA Section 302(j):

(a) Coal cleaning plants (with thermal dryers);
(b) Kraft pulp mills;
(c) Portland cement plants;
(d) Primary zinc smelters;
(e) Iron and steel mills;
(f) Primary aluminum ore reduction plants;
(g) Primary copper smelters;
(h) Municipal incinerators capable of charging more than 250 tons of refuse per day;
(i) Hydrofluoric, sulfuric, or nitric acid plants;
(j) Petroleum refineries;
(k) Lime plants;
(l) Phosphate rock processing plants;
(m) Coke oven batteries;
(n) Sulfur recovery plants;
(o) Carbon black plants (furnace process);
(p) Primary lead smelters;
(q) Fuel conversion plants;
(r) Sintering plants;
(s) Secondary metal production plants;
(t) Chemical process plants
(u) Fossil-fuel boilers (or combination thereof) totaling more than 250 million British thermal units per hour heat input;
(v) Petroleum storage and transfer units with a total storage capacity exceeding 300,000 barrels;
(w) Taconite ore processing plants;
(x) Glass fiber processing plants;
(y) Charcoal production plants;
(z) Fossil fuel-fired steam electric plants of more that 250 million British thermal units per hour heat input, and
(aa) Any other stationary source category which, as of August 7, 1980, is being regulated under section 111 or 112 of the Act.

Appendix B

Form SYNMIN

(Application for Synthetic Minor Limit)

OMB Control No. 2060-0003
Approval expires 04/30/2012

United States Environmental Protection Agency Program Address Phone Fax Web address	*Reviewing Authority Program* *Address* *Phone* *Fax* *Web address*

FEDERAL MINOR NEW SOURCE REVIEW PROGRAM IN INDIAN COUNTRY

Application For Synthetic Minor Limit

(Form SYNMIN)

Please submit information to:

Ms. Claudia Smith
U.S. EPA Region 8
Air and Toxics Division
1595 Wynkoop
Denver, CO 80202-1129

A. GENERAL INFORMATION

Company Name Anadarko Uintah Midstream LLC	**Source Name** North East Compressor Station
Company Contact or Owner Name Mike Weaver	Title Midstream Operations Manager
Mailing Address P.O.Box 173779, Denver, CO 80202-3779	
Email Address Mike.Weaver@anadarko.com	
Telephone Number 720-929-6792	Facsimile Number

B. ATTACHMENTS

For each criteria air pollutant, hazardous air pollutant and for all emission units and air pollutant-generating activities to be covered by a limitation, include the following:

☒ **Item 1** - The proposed limitation and a description of its effect on current actual, allowable and the potential to emit.
☒ **Item 2** - The proposed testing, monitoring, recordkeeping, and reporting requirements to be used to demonstrate and assure compliance with the proposed limitation.
☐
☒ **Item 3** - A description of estimated efficiency of air pollution control equipment under present or anticipated operating conditions, including documentation of the manufacturer specifications and guarantees.
☐
☒ **Item 4** - Estimates of the Post-Change Allowable Emissions that would result from compliance with the proposed limitation, including all calculations for the estimates.
☒ **Item 5** – Estimates of the potential emissions of Greenhouse Gas (GHG) pollutants:

Appendix C

Process Description,
Process Flow Diagram, &
Plot Plan

Process Description

Anadarko Uintah Midstream LLC (Anadarko) owns and operates the North East Compressor Station (North East), within the exterior boundaries of the Uintah and Ouray Indian Reservation, in Uintah County, Utah.

Natural gas from the surrounding field is routed to the compressor station via the gas collection system. Natural gas enters the compressor station through the inlet slug catcher where liquids are gravitationally separated from the stream. Condensate recovered is sent to the atmospheric storage tanks. Gas goes through two stages of compression before discharge from the facility. Water is stored in the atmospheric storage tanks along with condensate collected. Liquids are held in storage tanks onsite until loaded into trucks for transport to sale.

Archie Bench operations consists of:

- Two Caterpillar G3516 compressor engines (NOE1, and 2),
- Two produced water tanks (Tank-11022, 21022)
- One truck loading area
- One 0.25 MMBtu/hr line heater
- Piping components (FUG)

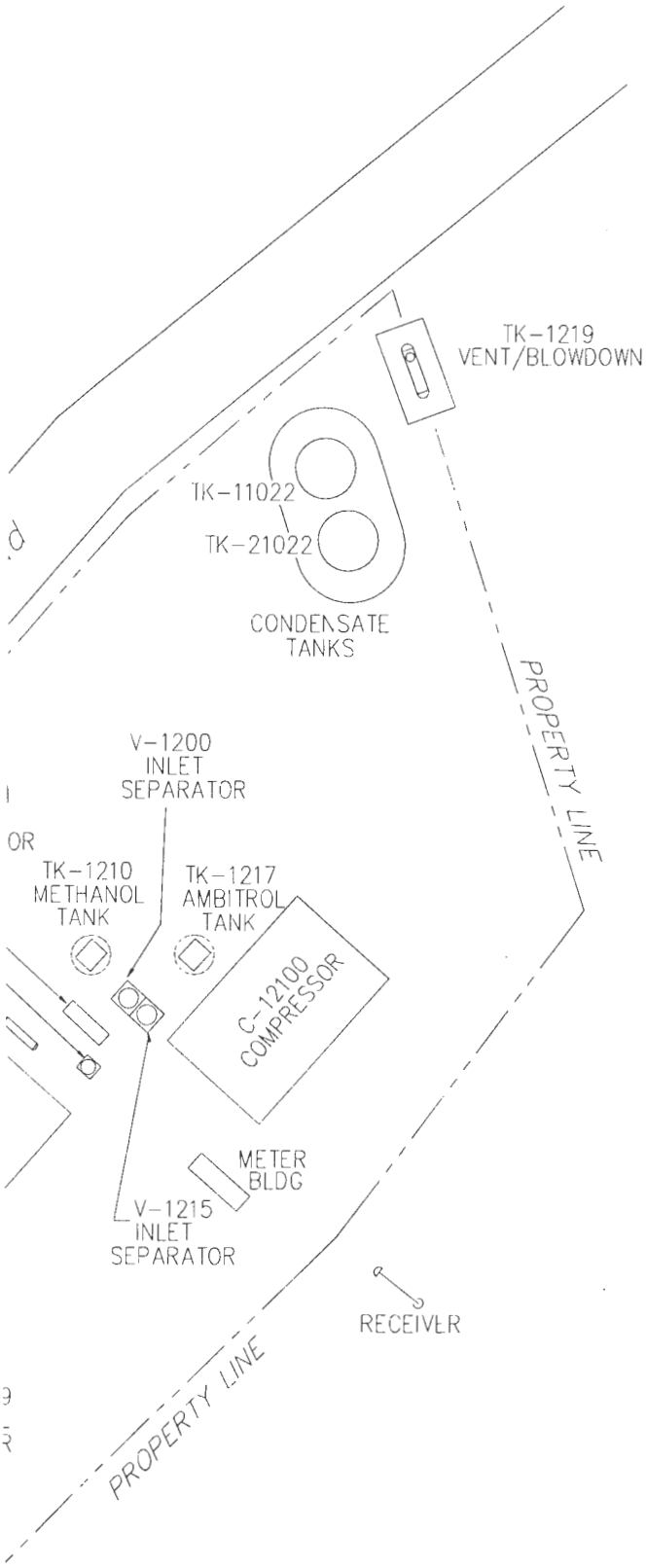

DATE	CHK.	DATE	APPR.	DATE
2/29/12				
5/08/08				
10/05/05				

Anadarko Petroleum Corporation

NORTH EAST COMPRESSOR STATION

PLOT PLAN

-

-

DRAWN BY: NHL	CREATION DATE: 6/12/08	AFE No.:
APPROVED: -	APPR. DATE:	
SCALE: NONE	DWG. No.: U12-GP-01	SHEET No. - OF -

PLOT STYLE:

BY:

LAST SAVED:

FILE LOCATION: N:\DWGS\UT\U12 NORTH EAST\PLOT PLAN\U12-GP-01.dwg

THIS DRAWING AND THE DESIGN IT COVERS ARE CONFIDENTIAL AND REMAIN THE PROPERTY OF ANADARKO PETROLEUM CORPORATION AND SHALL NOT BE DISCLOSED TO OTHERS OR REPRODUCED IN ANY MANNER OR USED FOR ANY PURPOSE WHATSOEVER EXCEPT BY WRITTEN PERMISSION BY THE OWNER.

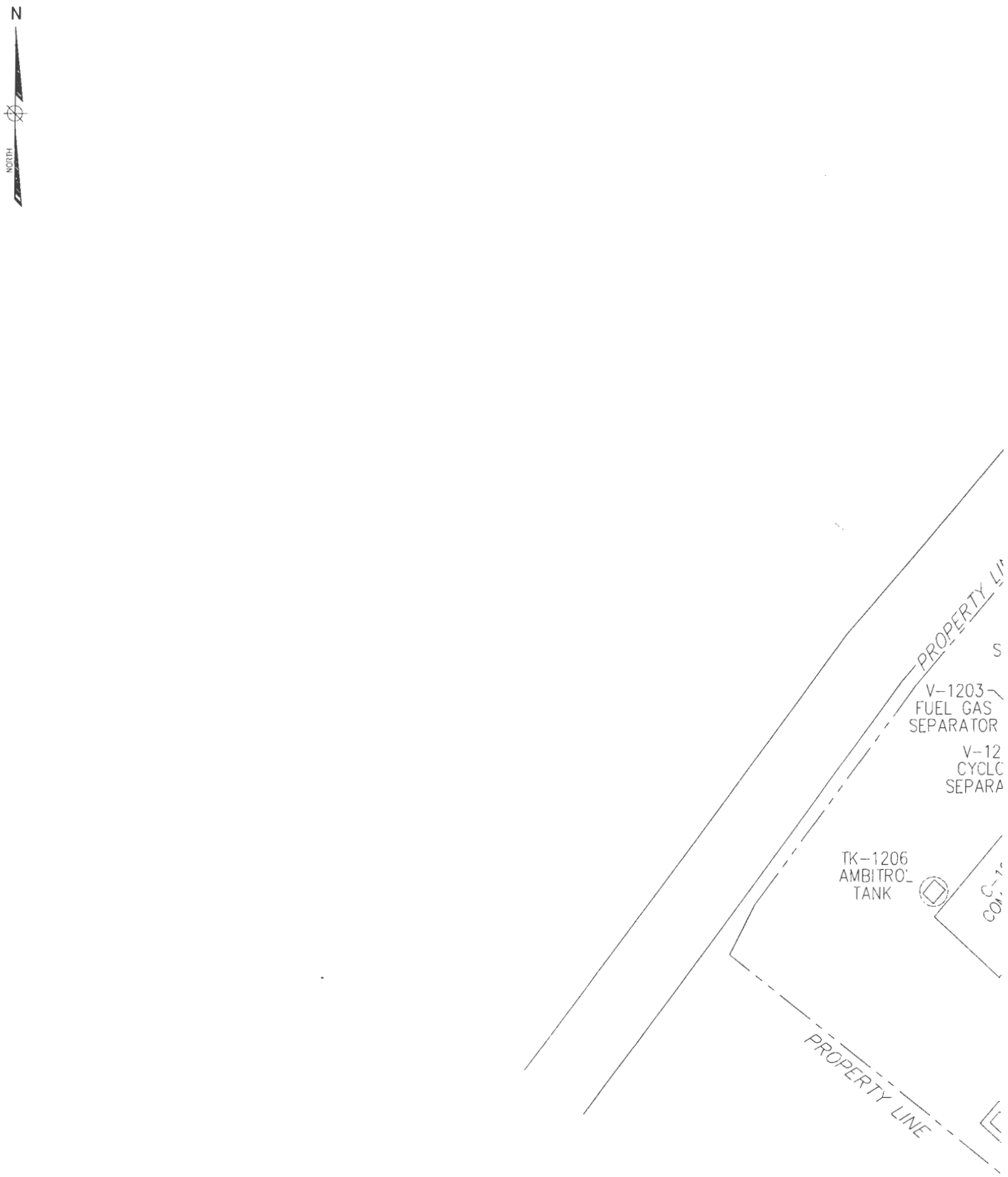

NOTES:

REFERENCE DRAWINGS		REVISIONS	
		3	AS-BUILT
		2	AS-BUILT
		1	UP-DATED AS-BUILT
		0	AS-BUILT
DWG. NO.	TITLE	NO.	DESCRIPTION

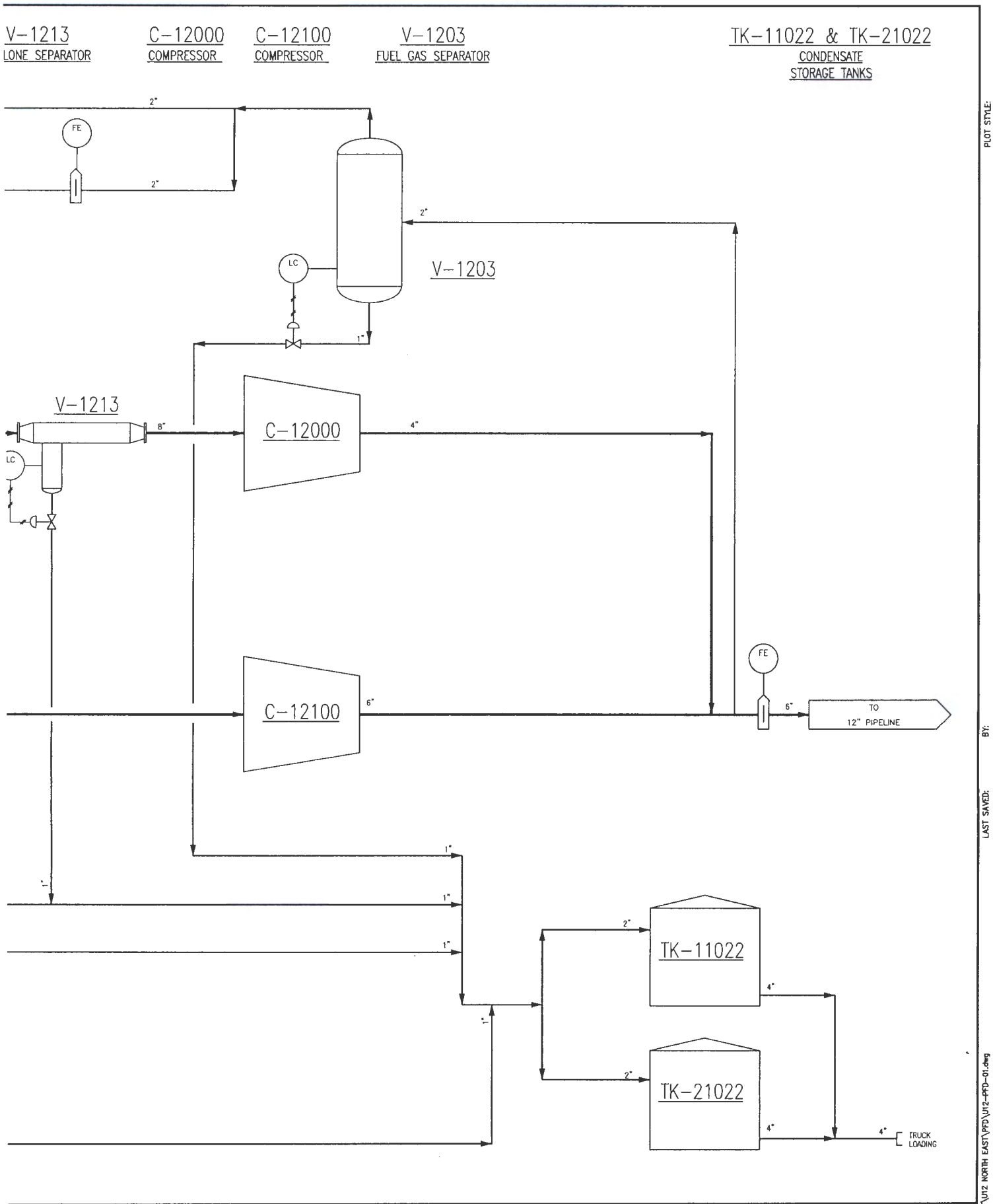

DATE		
6/16/08		
4/18/06	KV	
11/28/05	KV	
2/25/05	KV	
1/27/05	KV	
2/29/12		
DATE	CHK. DATE	APPR. DATE

Anadarko Petroleum Corporation

NORTH EAST COMPRESSOR STATION

NORTH EAST COMPRESSOR STATION
PROCESS FLOW DIAGRAM

DRAWN BY: NHL	CREATION DATE: 6/12/08	AFE No.:
APPROVED: –	APPR. DATE:	
SCALE: NONE	DWG. No.: U12-PFD-01	SHEET No. – OF –

PLOT STYLE:

BY:

LAST SAVED:

FILE LOCATION: H:\DWGS\UT\U12 NORTH EAST\PFD\U12-PFD-01.dwg

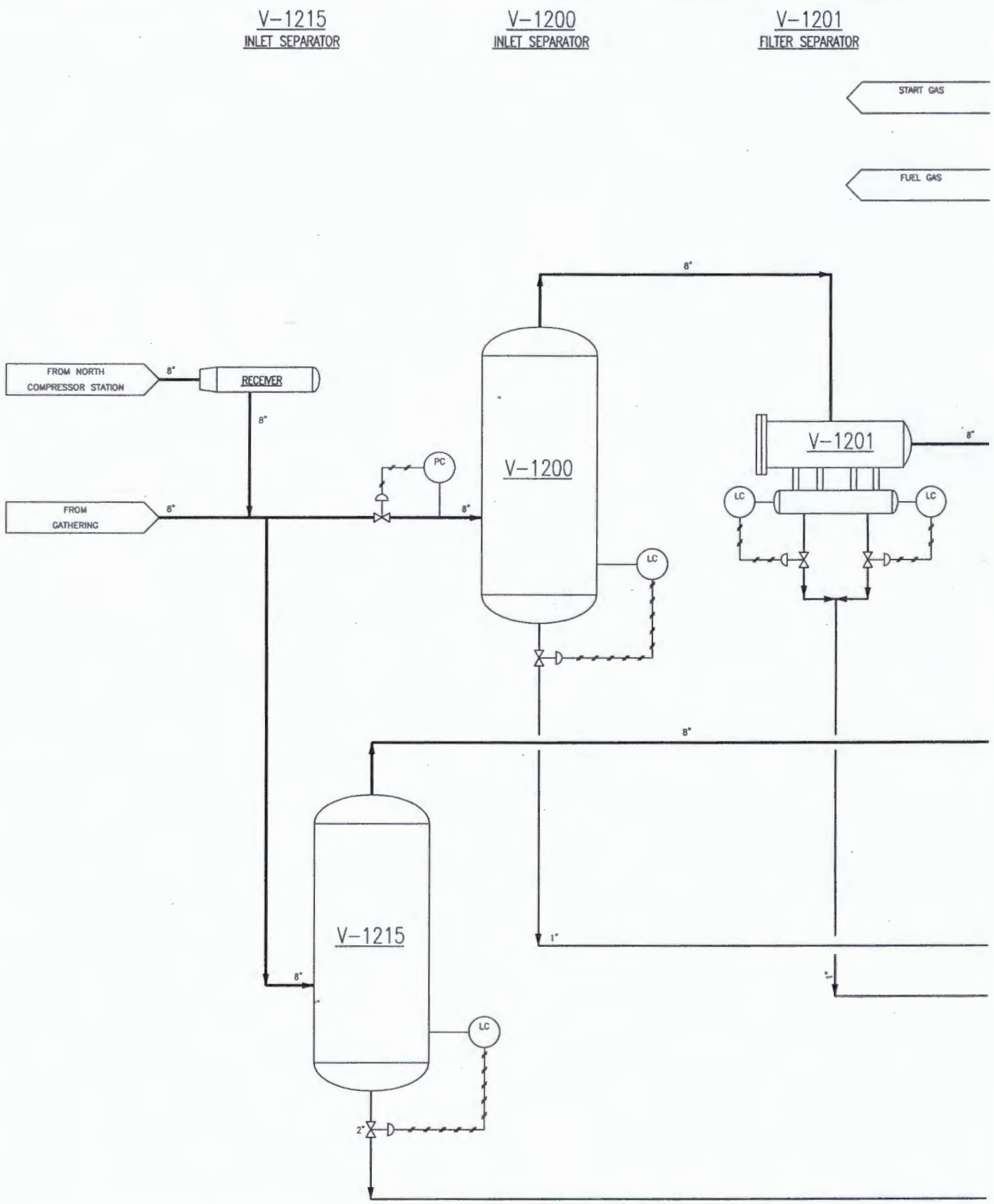

NOTES:

REFERENCE DRAWINGS		REVISIONS	
		2	ISSUED FOR REVIEW
		1	V-1215 AND C-12100
		D	ADDED RECEIVER
		C	ADDED V-1213
		B	PHA REVISIONS
		A	AS-BUILT
DWG. NO.	TITLE	NO.	DESCRIPTION

THIS DRAWING AND THE DESIGN IT COVERS ARE CONFIDENTIAL AND REMAIN THE PROPERTY OF ANADARKO PETROLEUM CORPORATION AND SHALL NOT BE DISCLOSED TO OTHERS OR REPRODUCED IN ANY MANNER OR USED FOR ANY PURPOSE WHATSOEVER EXCEPT BY WRITTEN PERMISSION BY THE OWNER.

Appendix D

Emission Unit Description

CO Emissions:

As per the Kerr-McGee ("KMG") Consent Decree, KMG is requesting to make the emission limits outlined in paragraphs 41 and 50 federal enforceable as required by paragraph 167. All engines located at the North East Compressor Station are fitted with oxidation catalyst which demonstrate a control efficiency of 93% is required for these RICEs as per the Kerr-McGee Consent Decree ***(paragraphs 41 and 50).***

KMG is requesting the control requirements for CO in the Consent Decrees be incorporated as permit conditions.

- Proposed limits

  CO emission control efficiency of 93% for Engines NOE-1 (C-10000), and NOE-2 (C-10100)

- Proposed testing
  - Initial Testing
    - Swap-outs and Like-kind Replacement Engines
      - Initial compliance test shall be conducted within 60 days after achieving the maximum production rate at which the affected facility will be operated, but not later than 180 days after initial startup.

    - Test Methods:
      - Measure the O_2 and CO at the outlet of the control device using portable analyzer. Use ASTM D6522-00 (2005), Method 10 of 40 CFR appendix A, or some other EPA approved Method for CO.
        Measurements to determine O_2 must be made at the same time as the measurements for CO concentration.
      - Convert to g/hp-hr using Method 19 and the manufacturer's specific fuel consumption or measured fuel consumption and horsepower at the time of the testing.
      - Conduct one (1) test run for each performance test required. Each test run must last at least 21 minutes

  - Ongoing Testing
    - Semi-annual or annual testing must be completed to verify compliance with g/hp-hr limits. Existing engines currently follow a semi-annual testing schedule. After permit issuance, if there is documented history of two consecutive, passing compliance tests, the testing frequency shall be reduced to annually. Overall, the testing frequency will not be reduced to annual tests until there are two consecutive, passing compliance tests (taking into account pre-permit, compliant tests). Total facility CO emissions shall be calculated based on the results of the latest test and 8,760 hours per year of operation. Should there

be a failed test, testing will resort to semi-annual testing. Two compliant semi-annual tests will be required before reverting to annual testing. Semi-annual tests must be completed within 180 days of permit issuance and annual tests must be completed within 365 days of permit issuance. Subsequent semi-annual and annual tests must occur anytime within the January to June and July to December semi-annual period or calendar year period, for semi-annual and annual testing, respectively. This means there will be instances where the time in between semi-annual tests may exceed 180 days and the time in between annual tests may exceed 365 days.

- Test Methods:
  - Measure the O_2 and CO at the outlet of the control device using portable analyzer. Use ASTM D6522-00 (2005), Method 10 of 40 CFR appendix A, or some other EPA approved Method for CO.
    Measurements to determine O_2 must be made at the same time as the measurements for CO concentration.
  - Convert to g/hp-hr using Method 19 and the manufacturer's specific fuel consumption or measured fuel consumption and horsepower at the time of the testing.
  - Conduct one (1) test run for each performance test required. Each test run must last at least 21 minutes

- Reporting Requirements

  - Notification of performance test shall be submitted 30 days prior to the date of the performance test.
  - Test reports shall be submitted within 60 days of completion of any compliance test.

- Operation and Maintenance Requirements

  - At all times, the permittee must operate and maintain any affected source, including associated air pollution control equipment and monitoring equipment, in a manner consistent with safety and good air pollution control practices for minimizing emissions.

<u>Formaldehyde Emissions:</u>

- This facility is a not major source of HAPs and is therefore not subject to the major source requirements of NESHAP Subpart ZZZZ. Therefore, no limits are being requested.

<u>NOx Emissions:</u>

- This facility NOx emissions are below the PSD threshold and, therefore, no limits are being requested.

<u>VOC Emissions:</u>

- Engines
  - VOC emissions based off manufacture's information. Total facility emissions are below the PSD threshold and, therefore, no limits are being requested.

- Produced Water Tanks
  - The produced water tanks at this station collect minimal condensate volumes. The VOC emissions from each tank are estimated based on process model to less than 6tpy.

  - Recordkeeping
    - Shall maintain records and information adequate to demonstrate its compliance with the requirements of this permit for five years.

- Pneumatic Controllers
  - Permit Limit:
    - All pneumatic controllers shall be "low bleed" controllers.

Appendix E

Emission Summary

Facility: North East Compressor Station
Location: Section 10 T9S R21E

Uncontrolled Emissions (TPY)											
Unit ID	**Description**	**NOx**	**CO**	**VOC**	**PM10**	**CO2e**	**CH2O**	**Acetaldehyde**	**Benzene**	**Acrolein**	**HAPS TOT**
NOE 1	G3516TALE	19.4	110.0	4.3	0.0	5784.1	3.8	0.36	0.02	0.22	4.36
NOE 2	G3516TALE	19.4	110.0	4.3	0.0	5784.1	3.8	0.36	0.02	0.22	4.36
TK 1-2	Tank Emissions	-	-	2.0	-	21.1	-	-	0.03	-	0.30
L-1	Tank Truck Loading	-	-	Insig.	-	-	-	-	-	-	-
HTR 1	Line Heater	0.2	0.1	Insig.	-	160.1	-	-	-	-	-
FUG	Fugitives	-	-	2.9	-	-	-	-	-	-	-
Total		**39.0**	**220.1**	**10.6**	**0.0**	**11749.4**	**7.5**	**0.7**	**0.1**	**0.4**	**9.0**

PTE Emissions (TPY)											
Unit ID	**Description**	**NOx**	**CO**	**VOC**	**PM10**	**CO2e**	**CH2O**	**Acetaldehyde**	**Benzene**	**Acrolein**	**HAPS TOT**
NOE 1	G3516TALE	19.4	7.7	3.2	0.0	5784.1	0.9	0.36	0.02	0.22	1.51
NOE 2	G3516TALE	19.4	7.7	3.2	0.0	5784.1	0.9	0.36	0.02	0.22	1.51
TK 1-2	Tank Emissions	-	-	2.0	-	21.1	-	-	0.03	-	0.30
L-1	Tank Truck Loading	-	-	Insig.	-	-	-	-	-	-	-
HTR 1	Line Heater	0.2	0.1	Insig.	-	0.0	-	-	-	-	-
FUG	Fugitives	-	-	2.9	-	-	-	-	-	-	-
Total		**39.0**	**15.5**	**8.4**	**0.0**	**11589.2**	**1.8**	**0.7**	**0.1**	**0.4**	**3.3**

Per guidance, PTE accounts for legally and practically enforceable restrictions (emission controls).

Appendix F

Detailed Emission Calculation

North East Compressor Station
Engine Detail Sheet

Source ID Number	**NOE 1**			
Source Description	4-Cycle Lean Burn			
Engine Usage	Compressor Engine			
Engine Make	Caterpillar	Potential operation	8760	hr/yr
Engine Model	G3516TALE			
Serial Number	3RC01189	Manufacture Date	5/3/1996	
Date in Service	Pre 2007	Potential fuel usage	96.2	MMscf/yr
Emission Controls	Lean Burn		10979	scf/hr
	Oxidation Catalyst/AFR			
		Stack ID	**NOE 1**	
Engine Rating	1340 BHP	Stack Height		ft
Fuel Heating Value	905.0 Btu/scf	Stack Diameter	1.0	ft
Heat Rate	9.94 MMBtu/hr	Exit Velocity	78.4	ft/s
Engine Heat Rate	7415 Btu/hp-hr	Exit Temperature	840	deg F
		Volume Flow Rate	3,690	ft^3/min

Uncontrolled Emissions

Pollutant	Emission Factor		Estimated Emissions		Source of Emission Factor	
	(lb/MMBtu)	(g/hp-hr)	(lb/hr)	(tpy)		
NOx	0.45	1.50	4.43	**19.4**	Manuf. Data	
CO	2.53	8.50	25.11	**110.0**	Manuf. Data	
VOC	0.10	0.33	0.97	**4.3**	Manuf. Data	
SOx	5.88E-04	0.002	0.01	**0.03**	AP-42, Table 3.2-2	
PM10	7.71E-05	0.0003	0.00	**0.00**	AP-42, Table 3.2-2	
PM2.5	7.71E-05	0.0003	0.00	**0.00**	AP-42, Table 3.2-2	
CO2e	132.9	447.0210	1320.56	**5784.07**	GHG Subpart C Calc.	
HAPs						lb/yr
HCHO	0.09	0.29	0.86	**3.75**	Manuf. Data	7504.8
Benzene	4.40E-04	0.0015	0.004	**0.02**	AP-42, Table 3.2-2	38.3
Acrolein	5.14E-03	0.0173	0.051	**0.22**	AP-42, Table 3.2-2	447.4
Acetaldehyde	8.36E-03	0.0281	0.083	**0.36**	AP-42, Table 3.2-2	727.7
				4.36		

PTE Emissions

Pollutant	Emission Factor		Estimated Emissions		Source of Emission Factor	
	(lb/MMBtu)	(g/hp-hr)	(lb/hr)	(tpy)		
NOx	0.45	1.50	4.43	**19.4**	Manuf. Data	
CO*	0.18	0.60	1.76	**7.7**	Manuf. Control Data	
VOC*	0.07	0.25	0.73	**3.2**	Manuf. Data	
SOx	5.88E-04	0.002	0.01	**0.03**	AP-42, Table 3.2-2	
PM10	7.71E-05	0.0003	0.00	**0.00**	AP-42, Table 3.2-2	
PM2.5	7.71E-05	0.0003	0.00	**0.00**	AP-42, Table 3.2-2	
HAPs						
HCHO*	0.02	0.07	0.21	**0.90**	Manuf. Control Data	1801.2
Benzene	4.40E-04	0.0015	0.004	**0.02**	AP-42, Table 3.2-2	38.3
Acrolein	5.14E-03	0.0173	0.051	**0.22**	AP-42, Table 3.2-2	447.4
Acetaldehyde	8.36E-03	0.0281	0.083	**0.36**	AP-42, Table 3.2-2	727.7

***CO: 93% Control Efficiency; VOC: 25% Control Efficiency; Formaldehyde: 76% Control Efficiency**

North East Compressor Station
Engine Detail Sheet

Source ID Number	**NOE 2**			
Source Description	4-Cycle Lean Burn			
Engine Usage	Compressor Engine			
Engine Make	Caterpillar	Potential operation	8760	hr/yr
Engine Model	G3516TALE			
Serial Number	4EK04722	Manufacture Date	9/2/2005	
Date in Service	2/10/2006	Potential fuel usage	96.2	MMscf/yr
Emission Controls	Lean Burn		10979	scf/hr
	Oxidation Catalyst/AFR			
		Stack ID	**NOE 2**	
Engine Rating	1340 BHP	Stack Height		ft
Fuel Heating Value	905.0 Btu/scf	Stack Diameter	1.0	ft
Heat Rate	9.94 MMBtu/hr	Exit Velocity	78.4	ft/s
Engine Heat Rate	7415 Btu/hp-hr	Exit Temperature	840	deg F
		Volume Flow Rate	3,690	ft^3/min

Uncontrolled Emissions

Pollutant	Emission Factor		Estimated Emissions		Source of Emission Factor	
	(lb/MMBtu)	(g/hp-hr)	(lb/hr)	(tpy)		
NOx	0.45	1.50	4.43	**19.4**	Manuf. Data	
CO	2.53	8.50	25.11	**110.0**	Manuf. Data	
VOC	0.10	0.33	0.97	**4.3**	Manuf. Data	
SOx	5.88E-04	0.002	0.01	**0.03**	AP-42, Table 3.2-2	
PM10	7.71E-05	0.0003	0.00	**0.00**	AP-42, Table 3.2-2	
PM2.5	7.71E-05	0.0003	0.00	**0.00**	AP-42, Table 3.2-2	
CO2e	132.9	447.0	1320.6	**5784.1**	GHG Subpart C Calc.	
HAPs						lb/yr
HCHO	0.09	0.29	0.86	**3.75**	Manuf. Data	7504.8
Benzene	4.40E-04	0.0015	0.004	**0.02**	AP-42, Table 3.2-2	38.3
Acrolein	5.14E-03	0.0173	0.051	**0.22**	AP-42, Table 3.2-2	447.4
Acetaldehyde	8.36E-03	0.0281	0.083	**0.36**	AP-42, Table 3.2-2	727.7
				4.36		

PTE Emissions

Pollutant	Emission Factor		Estimated Emissions		Source of Emission Factor	
	(lb/MMBtu)	(g/hp-hr)	(lb/hr)	(tpy)		
NOx	0.45	1.50	4.43	**19.4**	Manuf. Data	
CO*	0.18	0.60	1.76	7.7	Manuf. Control Data	
VOC*	0.07	0.25	0.73	**3.2**	Manuf. Data	
SOx	5.88E-04	0.002	0.01	**0.03**	AP-42, Table 3.2-2	
PM10	7.71E-05	0.0003	0.00	**0.00**	AP-42, Table 3.2-2	
PM2.5	7.71E-05	0.0003	0.00	**0.00**	AP-42, Table 3.2-2	
HAPs						
HCHO*	0.02	0.07	0.21	**0.90**	Manuf. Control Data	1801.2
Benzene	4.40E-04	0.0015	0.004	**0.02**	AP-42, Table 3.2-2	38.3
Acrolein	5.14E-03	0.0173	0.051	**0.22**	AP-42, Table 3.2-2	447.4
Acetaldehyde	8.36E-03	0.0281	0.083	**0.36**	AP-42, Table 3.2-2	727.7

***CO: 93% Control Efficiency; VOC: 25% Control Efficiency; Formaldehyde: 76% Control Efficiency**

Names	Units	Flash
Carbon Dioxide(Mass Flow)	ton/yr	0.14
Methane(Mass Flow)	ton/yr	1
Benzene(Mass Flow)	ton/yr	0.03
Toluene(Mass Flow)	ton/yr	0.022
Ethylbenzene(Mass Flow)	ton/yr	0.00093
p-Xylene(Mass Flow)	ton/yr	0.004
n-Hexane(Mass Flow)	ton/yr	0.24

Annual tank loss calculations for "Mixed Liquids Inlet".
Flashing losses are 2.04 ton/yr.
* Only Non-Exempt VOC are reported.

Tank-

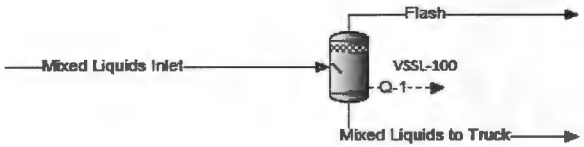

Names	Units	Mixed Liquids Inlet	Flash	Mixed Liquids to Truck
Carbon Dioxide(Mole Fraction)	%	0.0073	2.7	0.0015
Nitrogen(Mole Fraction)	%	7.7e-05	0.036	6e-07
Methane(Mole Fraction)	%	0.12	54	0.0024
Ethane(Mole Fraction)	%	0.025	11	0.0021
Propane(Mole Fraction)	%	0.028	10	0.0064
i-Butane(Mole Fraction)	%	0.013	3.5	0.0058
n-Butane(Mole Fraction)	%	0.026	5.7	0.014
i-Pentane(Mole Fraction)	%	0.024	2.8	0.018
n-Pentane(Mole Fraction)	%	0.028	2.5	0.022
Heptane(Mole Fraction)	%	0.1	0.9	0.1
n-Octane(Mole Fraction)	%	0.083	0.21	0.083
Nonane(Mole Fraction)	%	0.013	0.0094	0.013
C10 +(Mole Fraction)	%			
Benzene(Mole Fraction)	%	0.014	0.33	0.013
Toluene(Mole Fraction)	%	0.028	0.21	0.028
Ethylbenzene(Mole Fraction)	%	0.0033	0.0075	0.0033
p-Xylene(Mole Fraction)	%	0.014	0.033	0.014
n-Hexane(Mole Fraction)	%	0.088	2.4	0.083
Liquid Volumetric Flow	bbl/d	21.323	53.345	15.996

Annual tank loss calculations for "Mixed Liquids Inlet".
Total working and breathing losses from the Vertical Cylinder are 0.006635 ton/yr.
Loading losses are 0.002206 ton/yr of loaded liquid.
* Only Non-Exempt VOC are reported.

Tank

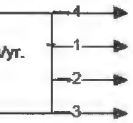

North East Compressor Station
Annual Condensate Throughput

		Condensate Production	Average Production	Water Production	Average Production	Combined Production	Average Production
Year	Month	bbls/month	bbls/day	bbls/month	bbls/day	bbls/month	bbls/day
2014	Jan	350	11	610	20	960	32.0
	Feb	150	5	467	15	617	20.6
	Mar	40	1	180	6	220	7.3
	Apr	0	0	0	0	0	0.0
	May	0	0	0	0	0	0.0
	Jun	0	0	80	3	80	2.7
	Jul	0	0	0	0	0	0.0
	Aug	0	0	0	0	0	0.0
	Sep	0	0	0	0	0	0.0
	Oct	0	0	160	5	160	5.3
	Nov	60	2	260	8	320	10.7
	Dec	40	1	280	9	320	10.7
2015	Jan	315	10	165	5	480	16.0
	Feb	210	8	110	4	320	10.7
	Mar	55	2	105	3	160	5.3
	Apr	40	0	40	1	80	2.7
	May	0	0	160	5	160	5.3
	Jun	0	0	0	0	0	0.0
	Jul	0	0	240	8	240	8.0
	Aug	0	0	80	3	80	2.7
	Sep	0	0	0	0	0	0.0
	Oct	0	0	0	0	0	0.0
	Nov	0	0	80	3	80	2.7
	Dec	0	0	0	0	0	0.0
	Average Daily Production		2		4		6

Max 2015 Avg Daily Production	16.0

North East Compressor Station
Heater Emission Calculation Sheet
Insignificant Source

Heater Data

ID	HTR 1	
Description	Line Heater	
Nameplate Rating:	0.25	(MMBtu/hr)
Efficiency:	0.80	(decimal)
Heat Input:	0.31	(MMBtu/hr)
Operation:	8760	(hr/yr)
Fuel Heat Value:	1200.0	(Btu/scf)
VOC Wt Fraction:	0.07	(decimal, VOC weight fraction of the fuel gas)

Emission Factors

	NO_X	CO	TOC	CH_2O
lb/MMscf	100	84	11	0.075
Adjusted lb/MMscf *	117.6	87.7	12.9	0.09
lb/MMBtu	0.115	0.086	0.013	0.000

* Emission factor conversion based on footnote "a" of AP-42 Table 1.4-1 to convert from 1,020 Btu/scf to the above Fuel Heat Value in units of Btu/scf.

Emission Calculations

NO_X		CO		VOC		CH_2O	
(lb/hr)	(ton/yr)	(lb/hr)	(ton/yr)	(lb/hr)	(ton/yr)	(lb/hr)	(ton/yr)
0.04	**0.16**	0.03	**0.12**	0.00	**0.00**	0.00	**0.00**

CO2e Emission Calculations

Conversions:

1 Metric Ton =	2204.62	lbs
1 kg =	0.001	metric tons

Pollutant	kg/mmbtu	metric ton	tpy
CO_2	53.02	145	159.99
CH_4	0.001	0.0	0.00
N_2O	0.0001	0.0	0.00
		CO_{2e} =	160

$CO_{2e} = CO_2 + (CH_4 * 21) + (N_2O * 310)$

North East Compressor Station
Fugitives Detail Sheet

Component Source Counts for Gas Plant/Compressor Station Units

Equipment Type	Compressor	Separator	Condensate Tank	TEG Unit	DEA Unit	C3 Refrig Skid	Expan Demeth	Mole Sieve System	Flare
For this facility, Number of Units	2	6	2	0	0	0	0	0	0
Valves - Inlet Gas	40	6	4	75	15	40	40	25	8
Valves - Liquid	5	4	6	20	60	35	35	0	2
Relief Valves	2	2	2	4	4	6	6	4	2
Pump Seals - Liquid	0	0	2	4	4	0	0	0	0
Flanges/Connectors - Inlet Gas	150	50	50	250	250	250	250	100	75
Flanges/Connectors - Liquid	10	10	10	20	20	20	20	20	10
Compressor Seals	4	0	0	0	0	6	0	0	0

Fugitives

Equipment Type	Emission Factor (lb/hr/source)	Source Count*	% VOC C3+	%HAP	VOC Emission Rate (lb/hr)	HAP Emission Rate (lb/hr)	HAP Emission Rate (tpy)	VOC Emission Rate (tpy)
Valves - Inlet Gas	0.00992	124	11.40%	0.12%	0.140	0.001	0.006	0.61
Valves - Liquid	0.00550	46	100.00%	11.40%	0.253	0.029	0.126	1.11
Relief Valves	0.01940	20	11.40%	0.12%	0.044	0.000	0.002	0.19
Pump Seals - Liquid	0.02866	4	100.00%	11.40%	0.115	0.013	0.057	0.50
Flanges/Connectors - Inlet Gas	0.00086	700	11.40%	0.12%	0.069	0.001	0.003	0.30
Flanges/Connectors - Liquid	0.00024	100	100.00%	11.40%	0.024	0.003	0.012	0.11
Compressor Seals	0.01940	8	11.40%	0.12%	0.018	0.000	0.001	0.08
Total					0.662	0.047	**0.21**	**2.90**

* Source counts estimated from similar facilities. These counts are not actuals.
Source. EPA Protocol for Equipment Leak Emission Estimates, November, 1995, EPA-453/R-95-017

Appendix G

Regulatory Analysis

Regulatory Analysis

40 CFR 60 - New Source Performance Standards (NSPS)

Subpart A: General Provisions. This subpart applies to the owner or operator of any stationary source which contains an affected facility, the construction or modification of which is commenced after the date of publication of any standard in part 60. The general provisions under subpart A apply to sources that are subject to the specific subparts of part 60. This facility is not subject to specific subparts of part 60; therefore, the General Provisions of part 60 do not apply.

Subpart Dc Standards of Performance for Small Industrial, Commercial, Institutional Steam Generating Units, applies to steam generating units having a capacity between 10 MMBtu/hr and 100 MMBtu/hr that are construction, reconstructed or modified after June 9, 1989. There are no emission units that meet the definition of a steam generating unit at this facility. Therefore, the requirements of subpart Dc do not apply.

Subpart Kb Standards of Performance for Volatile Organic Liquid Storage Vessels, applies to each storage vessel with a capacity greater than or equal to 75 cubic meters used to store volatile organic liquids (VOL) for which construction, reconstruction, or modification is commenced after July 23, 1984. There are no storage tanks greater than 75 cubic meters that store volatile organic liquids at this facility which vent emissions to the atmosphere, therefore Subpart Kb does not apply.

Subpart KKK Standards of Performance for Equipment Leaks of VOC from Onshore Natural Gas Processing Plants apply to affected facilities in onshore natural gas processing plants that commenced construction, modification or reconstruction after January 20, 1984. A natural gas processing plant is defined in the Subpart as any site "engaged in the extraction of natural gas liquids from field gas".
This facility does not contain processes which extract natural gas liquids from field gas. Therefore, this rule does apply.

Subpart LLL Standards of Performance for Onshore Natural Gas Processing; SO2 Emissions. This rule applies to sweetening units and sulfur recovery units at onshore natural gas processing facilities. This facility is not an onshore natural gas processing facility. Therefore, this rule does not apply.

Subpart IIII Standards of Performance for Stationary Compression Ignition Internal Combustion Engines applies to manufacturers, owners and operators of stationary compression ignition (CI) internal combustion engines (ICE). There are no stationary compression ignition engines at this site, therefore Subpart IIII does not apply.

Subpart JJJJ Standards of Performance for Stationary Spark Ignition Internal Combustion Engines applies to manufacturers, owners and operators of stationary spark ignition (SI) internal combustion engines (ICE). This applies to engines that were ordered from the manufacturer after June 12, 2006 and;

- Are greater than 500 hp and manufactured after July 1, 2007 or
- Lean burn engines greater than 500 hp but less than 1,350 hp and manufactured after January 1, 2008

Engines NOE #1, and NOE #2 are lean burn engines greater than 500 hp but less than 1,350 hp that were manufactured prior to January 1, 2008; therefore, subpart JJJJ does not apply to these engines.

Subpart OOOO Standards of Performance for Crude Oil and Natural Gas Production, Transmission and Distribution. This subpart establishes emissions standards and compliance schedules for the control of VOCs and SO2 emissions from affected facilities that commenced construction, modification or reconstruction after August 23, 2011.The rule applies to equipment leaks at onshore natural gas processing plants and compressors. This facility is not a natural gas processing plant and compressors were constructed prior to August 23, 2011; therefore, subpart OOOO is not applicable.

40 CFR 61 - National Emission Standards for Hazardous Air Pollutants

Subpart V National Emission Standard for Equipment Leaks (Fugitive Emission Sources). This subpart applies to sources that are intended to operate in volatile hazardous air pollutant (VHAP) service. Based on engineering judgment, historical and recent gas composition and facility process it can be predicted that the percent VHAP content will never exceed 10 percent by weight; therefore Subpart V is not an applicable regulation for the facility.

40 CFR 63 - National Emission Standards for Hazardous Air Pollutants (NESHAP)

Subpart HH National Emission Standards for Hazardous Air Pollutants from Oil and Natural Gas Production Facilities, applies to glycol dehydration units, storage vessels with potential for flash emissions, and ancillary equipment operating in volatile hazardous air pollutant service that is located at a natural gas processing plant which is a major source of HAPS. This facility is not a natural gas processing plant therefore Subpart HH does not apply.

Subpart HHH National Emission Standards for Hazardous Air Pollutants from Natural Gas Transmission and Storage Facilities. This rule applies to natural gas transmission and storage facilities that transport or store natural gas prior to entering the pipeline to a local distribution company or to a final end user, and that are a major source of HAP emissions. This subpart does not apply to this facility because it does not meet the definition of a Natural Gas Transmission and Storage Facility

Subpart EEEE National Emission Standards for Hazardous Air Pollutants: Organic Liquids Distribution (Non-Gasoline). This rule establishes national emission limitations, operating limits, and work practice standards for organic HAPs emitted from organic liquids distribution operations at major sources of HAP emissions. In this subpart, organic liquids distribution operations do not include oil and natural gas production field facilities as defined in subpart HH or natural gas transmission and storage facilities as defined in subpart HHH. This facility meets the definition an oil and natural gas production field facility as defined in §63.761 of subpart HH. Therefore, this rule does not apply.

Subpart ZZZZ National Emission Standards for Hazardous Air Pollutants for Stationary Reciprocating Internal Combustion Engines (RICE) establishes national emission limitations and operating limitations for HAPs emitted from stationary reciprocating internal combustion engines, and requirements to demonstrate initial and continuous compliance with the emission limitations and operating limitations. This facility is an area source of HAPs; therefore, the facility is not subject to major source ZZZZ requirements. All engines (emission units NOE 1 and NOE 2) at the facility are subject to the August 20, 2010 revisions to MACT ZZZZ for existing units at areas sources of HAPs. This facility is by definition a remote sources and will comply with applicable requirements of this regulation.

40 CFR 98 – Green House Gas Reporting

Subpart A, General Provisions applies to a facility that contains any source category (as defined in subparts C through JJ of this part) that is listed in this paragraph (a)(2) in any calendar year starting in 2010 and that emits 25,000 metric tons CO2e or more per year in combined emissions from stationary fuel combustion units, miscellaneous uses of carbonate, and all source categories that are listed in this regulation. The facility is subject to the reporting requirements of Subpart C and Subpart W.