EPA/625/R-96/010b

Compendium of Methods for the Determination of Toxic Organic Compounds in Ambient Air

Second Edition

Compendium Method TO-15

Determination Of Volatile Organic Compounds (VOCs) In Air Collected In Specially-Prepared Canisters And Analyzed By Gas Chromatography/ Mass Spectrometry (GC/MS)

Center for Environmental Research Information
Office of Research and Development
U.S. Environmental Protection Agency
Cincinnati, OH 45268

January 1999

Method TO-15
Acknowledgements

This Method was prepared for publication in the *Compendium of Methods for the Determination of Toxic Organic Compounds in Ambient Air, Second Edition* (EPA/625/R-96/010b), which was prepared under Contract No. 68-C3-0315, WA No. 3-10, by Midwest Research Institute (MRI), as a subcontractor to Eastern Research Group, Inc. (ERG), and under the sponsorship of the U.S. Environmental Protection Agency (EPA). Justice A. Manning, John O. Burckle, and Scott Hedges, Center for Environmental Research Information (CERI), and Frank F. McElroy, National Exposure Research Laboratory (NERL), all in the EPA Office of Research and Development, were responsible for overseeing the preparation of this method. Additional support was provided by other members of the Compendia Workgroup, which include:

- John O. Burckle, EPA, ORD, Cincinnati, OH
- James L. Cheney, Corps of Engineers, Omaha, NB
- Michael Davis, U.S. EPA, Region 7, KC, KS
- Joseph B. Elkins Jr., U.S. EPA, OAQPS, RTP, NC
- Robert G. Lewis, U.S. EPA, NERL, RTP, NC
- Justice A. Manning, U.S. EPA, ORD, Cincinnati, OH
- William A. McClenny, U.S. EPA, NERL, RTP, NC
- Frank F. McElroy, U.S. EPA, NERL, RTP, NC
- Heidi Schultz, ERG, Lexington, MA
- William T. "Jerry" Winberry, Jr., EnviroTech Solutions, Cary, NC

This Method is the result of the efforts of many individuals. Gratitude goes to each person involved in the preparation and review of this methodology.

Author(s)

- William A. McClenny, U.S. EPA, NERL, RTP, NC
- Michael W. Holdren, Battelle, Columbus, OH

Peer Reviewers

- Karen Oliver, ManTech, RTP, NC
- Jim Cheney, Corps of Engineers, Omaha, NB
- Elizabeth Almasi, Varian Chromatography Systems, Walnut Creek, CA
- Norm Kirshen, Varian Chromatography Systems, Walnut Creek, CA
- Richard Jesser, Graseby, Smyrna, GA
- Bill Taylor, Graseby, Smyrna, GA
- Lauren Drees, U.S. EPA, NRMRL, Cincinnati, OH

Finally, recognition is given to Frances Beyer, Lynn Kaufman, Debbie Bond, Cathy Whitaker, and Kathy Johnson of Midwest Research Institute's Administrative Services staff whose dedication and persistence during the development of this manuscript has enabled it's production.

DISCLAIMER

This Compendium has been subjected to the Agency's peer and administrative review, and it has been approved for publication as an EPA document. Mention of trade names or commercial products does not constitute endorsement or recommendation for use.

METHOD TO-15

Determination of Volatile Organic Compounds (VOCs) In Air Collected In Specially-Prepared Canisters And Analyzed By Gas Chromatography/ Mass Spectrometry (GC/MS)

TABLE OF CONTENTS

		Page
1.	Scope	15-1
2.	Summary of Method	15-2
3.	Significance	15-3
4.	Applicable Documents	15-4
	4.1 ASTM Standards	15-4
	4.2 EPA Documents	15-4
5.	Definitions	15-4
6.	Interferences and Contamination	15-6
7.	Apparatus and Reagents	15-6
	7.1 Sampling Apparatus	15-6
	7.2 Analytical Apparatus	15-8
	7.3 Calibration System and Manifold Apparatus	15-10
	7.4 Reagents	15-10
8.	Collection of Samples in Canisters	15-10
	8.1 Introduction	15-10
	8.2 Sampling System Description	15-11
	8.3 Sampling Procedure	15-12
	8.4 Cleaning and Certification Program	15-14
9.	GC/MS Analysis of Volatiles from Canisters	15-16
	9.1 Introduction	15-16
	9.2 Preparation of Standards	15-17
10.	GC/MS Operating Conditions	15-21
	10.1 Preconcentrator	15-21
	10.2 GC/MS System	15-22
	10.3 Analytical Sequence	15-22
	10.4 Instrument Performance Check	15-23
	10.5 Initial Calibration	15-23
	10.6 Daily Calibration	15-27
	10.7 Blank Analyses	15-27
	10.8 Sample Analysis	15-28

TABLE OF CONTENTS (continued)

Page

11. Requirements for Demonstrating Method Acceptability for VOC Analysis from Canisters 15-31
    11.1 Introduction 15-31
    11.2 Method Detection Limit 15-31
    11.3 Replicate Precision 15-31
    11.4 Audit Accuracy 15-32

12. References 15-32

METHOD TO-15

Determination of Volatile Organic Compounds (VOCs) In Air Collected In Specially-Prepared Canisters And Analyzed By Gas Chromatography/ Mass Spectrometry (GC/MS)

1. Scope

1.1 This method documents sampling and analytical procedures for the measurement of subsets of the 97 volatile organic compounds (VOCs) that are included in the 189 hazardous air pollutants (HAPs) listed in Title III of the Clean Air Act Amendments of 1990. VOCs are defined here as organic compounds having a vapor pressure greater than 10^{-1} Torr at 25°C and 760 mm Hg. Table 1 is the list of the target VOCs along with their CAS number, boiling point, vapor pressure and an indication of their membership in both the list of VOCs covered by Compendium Method TO-14A (1) and the list of VOCs in EPA's Contract Laboratory Program (CLP) document entitled: *Statement-of-Work (SOW) for the Analysis of Air Toxics from Superfund Sites (2).*

Many of these compounds have been tested for stability in concentration when stored in specially-prepared canisters (see Section 8) under conditions typical of those encountered in routine ambient air analysis. The stability of these compounds under all possible conditions is not known. However, a model to predict compound losses due to physical adsorption of VOCs on canister walls and to dissolution of VOCs in water condensed in the canisters has been developed (3). Losses due to physical adsorption require only the establishment of equilibrium between the condensed and gas phases and are generally considered short term losses, (i.e., losses occurring over minutes to hours). Losses due to chemical reactions of the VOCs with cocollected ozone or other gas phase species also account for some short term losses. Chemical reactions between VOCs and substances inside the canister are generally assumed to cause the gradual decrease of concentration over time (i.e., long term losses over days to weeks). Loss mechanisms such as aqueous hydrolysis and biological degradation (4) also exist. No models are currently known to be available to estimate and characterize all these potential losses, although a number of experimental observations are referenced in Section 8. Some of the VOCs listed in Title III have short atmospheric lifetimes and may not be present except near sources.

1.2 This method applies to ambient concentrations of VOCs above 0.5 ppbv and typically requires VOC enrichment by concentrating up to one liter of a sample volume. The VOC concentration range for ambient air in many cases includes the concentration at which continuous exposure over a lifetime is estimated to constitute a 10^{-6} or higher lifetime risk of developing cancer in humans. Under circumstances in which many hazardous VOCs are present at 10^{-6} risk concentrations, the total risk may be significantly greater.

1.3 This method applies under most conditions encountered in sampling of ambient air into canisters. However, the composition of a gas mixture in a canister, under unique or unusual conditions, will change so that the sample is known not to be a true representation of the ambient air from which it was taken. For example, low humidity conditions in the sample may lead to losses of certain VOCs on the canister walls, losses that would not happen if the humidity were higher. If the canister is pressurized, then condensation of water from high humidity samples may cause fractional losses of water-soluble compounds. Since the canister surface area is limited, all gases are in competition for the available active sites. Hence an absolute storage stability cannot be assigned to a specific gas. Fortunately, under conditions of normal usage for sampling ambient air, most VOCs can be recovered from canisters near their original concentrations after storage times of up to thirty days (see Section 8).

1.4 Use of the Compendium Method TO-15 for many of the VOCs listed in Table 1 is likely to present two difficulties: (1) what calibration standard to use for establishing a basis for testing and quantitation, and (2) how

to obtain an audit standard. In certain cases a chemical similarity exists between a thoroughly tested compound and others on the Title III list. In this case, what works for one is likely to work for the other in terms of making standards. However, this is not always the case and some compound standards will be troublesome. The reader is referred to the Section 9.2 on standards for guidance. Calibration of compounds such as formaldehyde, diazomethane, and many of the others represents a challenge.

1.5 Compendium Method TO-15 should be considered for use when a subset of the 97 Title III VOCs constitute the target list. Typical situations involve ambient air testing associated with the permitting procedures for emission sources. In this case sampling and analysis of VOCs is performed to determine the impact of dispersing source emissions in the surrounding areas. Other important applications are prevalence and trend monitoring for hazardous VOCs in urban areas and risk assessments downwind of industrialized or source-impacted areas.

1.6 Solid adsorbents can be used in lieu of canisters for sampling of VOCs, provided the solid adsorbent packings, usually multisorbent packings in metal or glass tubes, can meet the performance criteria specified in Compendium Method TO-17 which specifically addresses the use of multisorbent packings. The two sample collection techniques are different but become the same upon movement of the sample from the collection medium (canister or multisorbent tubes) onto the sample concentrator. Sample collection directly from the atmosphere by automated gas chromatographs can be used in lieu of collection in canisters or on solid adsorbents.

2. Summary of Method

2.1 The atmosphere is sampled by introduction of air into a specially-prepared stainless steel canister. Both subatmospheric pressure and pressurized sampling modes use an initially evacuated canister. A pump ventilated sampling line is used during sample collection with most commercially available samplers. Pressurized sampling requires an additional pump to provide positive pressure to the sample canister. A sample of air is drawn through a sampling train comprised of components that regulate the rate and duration of sampling into the pre-evacuated and passivated canister.

2.2 After the air sample is collected, the canister valve is closed, an identification tag is attached to the canister, and the canister is transported to the laboratory for analysis.

2.3 Upon receipt at the laboratory, the canister tag data is recorded and the canister is stored until analysis. Storage times of up to thirty days have been demonstrated for many of the VOCs (5).

2.4 To analyze the sample, a known volume of sample is directed from the canister through a solid multisorbent concentrator. A portion of the water vapor in the sample breaks through the concentrator during sampling, to a degree depending on the multisorbent composition, duration of sampling, and other factors. Water content of the sample can be further reduced by dry purging the concentrator with helium while retaining target compounds. After the concentration and drying steps are completed, the VOCs are thermally desorbed, entrained in a carrier gas stream, and then focused in a small volume by trapping on a reduced temperature trap or small volume multisorbent trap. The sample is then released by thermal desorption and carried onto a gas chromatographic column for separation.

As a simple alternative to the multisorbent/dry purge water management technique, the amount of water vapor in the sample can be reduced below any threshold for affecting the proper operation of the analytical system by

reducing the sample size. For example, a small sample can be concentrated on a cold trap and released directly to the gas chromatographic column. The reduction in sample volume may require an enhancement of detector sensitivity.

Other water management approaches are also acceptable as long as their use does not compromise the attainment of the performance criteria listed in Section 11. A listing of some commercial water management systems is provided in Appendix A. One of the alternative ways to dry the sample is to separate VOCs from condensate on a low temperature trap by heating and purging the trap.

2.5 The analytical strategy for Compendium Method TO-15 involves using a high resolution gas chromatograph (GC) coupled to a mass spectrometer. If the mass spectrometer is a linear quadrupole system, it is operated either by continuously scanning a wide range of mass to charge ratios (SCAN mode) or by monitoring select ion monitoring mode (SIM) of compounds on the target list. If the mass spectrometer is based on a standard ion trap design, only a scanning mode is used (note however, that the Selected Ion Storage (SIS) mode for the ion trap has features of the SIM mode). Mass spectra for individual peaks in the total ion chromatogram are examined with respect to the fragmentation pattern of ions corresponding to various VOCs including the intensity of primary and secondary ions. The fragmentation pattern is compared with stored spectra taken under similar conditions, in order to identify the compound. For any given compound, the intensity of the primary fragment is compared with the system response to the primary fragment for known amounts of the compound. This establishes the compound concentration that exists in the sample.

Mass spectrometry is considered a more definitive identification technique than single specific detectors such as flame ionization detector (FID), electron capture detector (ECD), photoionization detector (PID), or a multidetector arrangement of these (see discussion in Compendium Method TO-14A). The use of both gas chromatographic retention time and the generally unique mass fragmentation patterns reduce the chances for misidentification. If the technique is supported by a comprehensive mass spectral database and a knowledgeable operator, then the correct identification and quantification of VOCs is further enhanced.

3. Significance

3.1 Compendium Method TO-15 is significant in that it extends the Compendium Method TO-14A description for using canister-based sampling and gas chromatographic analysis in the following ways:

- Compendium Method TO-15 incorporates a multisorbent/dry purge technique or equivalent (see Appendix A) for water management thereby addressing a more extensive set of compounds (the VOCs mentioned in Title III of the CAAA of 1990) than addressed by Compendium Method TO-14A. Compendium Method TO-14A approach to water management alters the structure or reduces the sample stream concentration of some VOCs, especially water-soluble VOCs.
- Compendium Method TO-15 uses the GC/MS technique as the only means to identify and quantitate target compounds. The GC/MS approach provides a more scientifically-defensible detection scheme which is generally more desirable than the use of single or even multiple specific detectors.
- In addition, Compendium Method TO-15 establishes method performance criteria for acceptance of data, allowing the use of alternate but equivalent sampling and analytical equipment. There are several new and viable commercial approaches for water management as noted in Appendix A of this method on which to base a VOC monitoring technique as well as other approaches to sampling (i.e., autoGCs and solid

adsorbents) that are often used. This method lists performance criteria that these alternatives must meet to be acceptable alternatives for monitoring ambient VOCs.

- Finally, Compendium Method TO-15 includes enhanced provisions for inherent quality control. The method uses internal analytical standards and frequent verification of analytical system performance to assure control of the analytical system. This more formal and better documented approach to quality control guarantees a higher percentage of good data.

3.2 With these features, Compendium Method TO-15 is a more general yet better defined method for VOCs than Compendium Method TO-14A. As such, the method can be applied with a higher confidence to reduce the uncertainty in risk assessments in environments where the hazardous volatile gases listed in the Title III of the Clean Air Act Amendments of 1990 are being monitored. An emphasis on risk assessments for human health and effects on the ecology is a current goal for the U.S. EPA.

4. Applicable Documents

4.1 ASTM Standards

- **Method D1356** *Definitions of Terms Relating to Atmospheric Sampling and Analysis.*
- **Method E260** *Recommended Practice for General Gas Chromatography Procedures.*
- **Method E355** *Practice for Gas Chromatography Terms and Relationships.*
- **Method D5466** *Standard Test Method of Determination of Volatile Organic Compounds in Atmospheres (Canister Sampling Methodology).*

4.2 EPA Documents

- *Quality Assurance Handbook for Air Pollution Measurement Systems, Volume II*, U. S. Environmental Protection Agency, EPA-600/R-94-038b, May 1994.
- *Technical Assistance Document for Sampling and Analysis of Toxic Organic Compounds in Ambient Air*, U. S. Environmental Protection Agency, EPA-600/4-83-027, June 1983.
- *Compendium of Methods for the Determination of Toxic Organic Compounds in Ambient Air: Method TO-14, Second Supplement*, U. S. Environmental Protection Agency, EPA-600/4-89-018, March 1989.
- *Statement-of-Work (SOW) for the Analysis of Air Toxics from Superfund Sites*, U. S. Environmental Protection Agency, Office of Solid Waste, Washington, D.C., Draft Report, June 1990.
- *Clean Air Act Amendments of 1990,* U. S. Congress, Washington, D.C., November 1990.

5. Definitions

[Note: Definitions used in this document and any user-prepared standard operating procedures (SOPs) should be consistent with ASTM Methods D1356, E260, and E355. Aside from the definitions given below, all pertinent abbreviations and symbols are defined within this document at point of use.]

5.1 **Gauge** Pressure—pressure measured with reference to the surrounding atmospheric pressure, usually expressed in units of kPa or psi. Zero gauge pressure is equal to atmospheric (barometric) pressure.

5.2 Absolute Pressure—pressure measured with reference to absolute zero pressure, usually expressed in units of kPa, or psi.

5.3 Cryogen—a refrigerant used to obtain sub-ambient temperatures in the VOC concentrator and/or on front of the analytical column. Typical cryogens are liquid nitrogen (bp -195.8°C), liquid argon (bp -185.7°C), and liquid CO_2 (bp -79.5°C).

5.4 Dynamic Calibration—calibration of an analytical system using calibration gas standard concentrations in a form identical or very similar to the samples to be analyzed and by introducing such standards into the inlet of the sampling or analytical system from a manifold through which the gas standards are flowing.

5.5 Dynamic Dilution—means of preparing calibration mixtures in which standard gas(es) from pressurized cylinders are continuously blended with humidified zero air in a manifold so that a flowing stream of calibration mixture is available at the inlet of the analytical system.

5.6 MS-SCAN—mass spectrometric mode of operation in which the gas chromatograph (GC) is coupled to a mass spectrometer (MS) programmed to SCAN all ions repeatedly over a specified mass range.

5.7 MS-SIM—mass spectrometric mode of operation in which the GC is coupled to a MS that is programmed to scan a selected number of ions repeatedly [i.e., selected ion monitoring (SIM) mode].

5.8 Qualitative Accuracy—the degree of measurement accuracy required to correctly identify compounds with an analytical system.

5.9 Quantitative Accuracy—the degree of measurement accuracy required to correctly measure the concentration of an identified compound with an analytical system with known uncertainty.

5.10 Replicate Precision—precision determined from two canisters filled from the same air mass over the same time period and determined as the absolute value of the difference between the analyses of canisters divided by their average value and expressed as a percentage (see Section 11 for performance criteria for replicate precision).

5.11 Duplicate Precision—precision determined from the analysis of two samples taken from the same canister. The duplicate precision is determined as the absolute value of the difference between the canister analyses divided by their average value and expressed as a percentage.

5.12 Audit Accuracy—the difference between the analysis of a sample provided in an audit canister and the nominal value as determined by the audit authority, divided by the audit value and expressed as a percentage (see Section 11 for performance criteria for audit accuracy).

6. Interferences and Contamination

6.1 Very volatile compounds, such as chloromethane and vinyl chloride can display peak broadening and co-elution with other species if the compounds are not delivered to the GC column in a small volume of carrier gas. Refocusing of the sample after collection on the primary trap, either on a separate focusing trap or at the head of the gas chromatographic column, mitigates this problem.

6.2 Interferences in canister samples may result from improper use or from contamination of: (1) the canisters due to poor manufacturing practices, (2) the canister cleaning apparatus, and (3) the sampling or analytical system. Attention to the following details will help to minimize the possibility of contamination of canisters.

6.2.1 Canisters should be manufactured using high quality welding and cleaning techniques, and new canisters should be filled with humidified zero air and then analyzed, after "aging" for 24 hours, to determine cleanliness. The cleaning apparatus, sampling system, and analytical system should be assembled of clean, high quality components and each system should be shown to be free of contamination.

6.2.2 Canisters should be stored in a contaminant-free location and should be capped tightly during shipment to prevent leakage and minimize any compromise of the sample.

6.2.3 Impurities in the calibration dilution gas (if applicable) and carrier gas, organic compounds out-gassing from the system components ahead of the trap, and solvent vapors in the laboratory account for the majority of contamination problems. The analytical system must be demonstrated to be free from contamination under the conditions of the analysis by running humidified zero air blanks. The use of non-chromatographic grade stainless steel tubing, non-PTFE thread sealants, or flow controllers with Buna-N rubber components must be avoided.

6.2.4 Significant contamination of the analytical equipment can occur whenever samples containing high VOC concentrations are analyzed. This in turn can result in carryover contamination in subsequent analyses. Whenever a high concentration (>25 ppbv of a trace species) sample is encountered, it should be followed by an analysis of humid zero air to check for carry-over contamination.

6.2.5 In cases when solid sorbents are used to concentrate the sample prior to analysis, the sorbents should be tested to identify artifact formation (see Compendium Method TO-17 for more information on artifacts).

7. Apparatus and Reagents

[Note: Compendium Method To-14A list more specific requirements for sampling and analysis apparatus which may be of help in identifying options. The listings below are generic.]

7.1 Sampling Apparatus

[Note: Subatmospheric pressure and pressurized canister sampling systems are commercially available and have been used as part of U.S. Environmental Protection Agency's Toxic Air Monitoring Stations (TAMS), Urban Air Toxic Monitoring Program (UATMP), the non-methane organic compound (NMOC) sampling and analysis program, and the Photochemical Assessment Monitoring Stations (PAMS).]

7.1.1 Subatmospheric Pressure (see Figure 1, without metal bellows type pump).

7.1.1.1 Sampling Inlet Line. Stainless steel tubing to connect the sampler to the sample inlet.

7.1.1.2 Sample Canister. Leak-free stainless steel pressure vessels of desired volume (e.g., 6 L), with valve and specially prepared interior surfaces (see Appendix B for a listing of known manufacturers/resellers of canisters).

7.1.1.3 Stainless Steel Vacuum/Pressure Gauges. Two types are required, one capable of measuring vacuum (–100 to 0 kPa or 0 to - 30 in Hg) and pressure (0–206 kPa or 0–30 psig) in the sampling system and a second type (for checking the vacuum of canisters during cleaning) capable of measuring at 0.05 mm Hg (see Appendix B) within 20%. Gauges should be tested clean and leak tight.

7.1.1.4 Electronic Mass Flow Controller. Capable of maintaining a constant flow rate (± 10%) over a sampling period of up to 24 hours and under conditions of changing temperature (20–40°C) and humidity.

7.1.1.5 Particulate Matter Filter. 2-μm sintered stainless steel in-line filter.

7.1.1.6 Electronic Timer. For unattended sample collection.

7.1.1.7 Solenoid Valve. Electrically-operated, bi-stable solenoid valve with Viton® seat and O-rings. A Skinner Magnelatch valve is used for purposes of illustration in the text (see Figure 2).

7.1.1.8 Chromatographic Grade Stainless Steel Tubing and Fittings. For interconnections. All such materials in contact with sample, analyte, and support gases prior to analysis should be chromatographic grade stainless steel or equivalent.

7.1.1.9 Thermostatically Controlled Heater. To maintain above ambient temperature inside insulated sampler enclosure.

7.1.1.10 Heater Thermostat. Automatically regulates heater temperature.

7.1.1.11 Fan. For cooling sampling system.

7.1.1.12 Fan Thermostat. Automatically regulates fan operation.

7.1.1.13 Maximum-Minimum Thermometer. Records highest and lowest temperatures during sampling period.

7.1.1.14 Stainless Steel Shut-off Valve. Leak free, for vacuum/pressure gauge.

7.1.1.15 Auxiliary Vacuum Pump. Continuously draws air through the inlet manifold at 10 L/min. or higher flow rate. Sample is extracted from the manifold at a lower rate, and excess air is exhausted.

[Note: The use of higher inlet flow rates dilutes any contamination present in the inlet and reduces the possibility of sample contamination as a result of contact with active adsorption sites on inlet walls.]

7.1.1.16 Elapsed Time Meter. Measures duration of sampling.

7.1.1.17 Optional Fixed Orifice, Capillary, or Adjustable Micrometering Valve. May be used in lieu of the electronic flow controller for grab samples or short duration time-integrated samples. Usually appropriate only in situations where screening samples are taken to assess future sampling activity.

7.1.2 Pressurized (see Figure 1 with metal bellows type pump and Figure 3).

7.1.2.1 Sample Pump. Stainless steel, metal bellows type, capable of 2 atmospheres output pressure. Pump must be free of leaks, clean, and uncontaminated by oil or organic compounds.

[Note: An alternative sampling system has been developed by Dr. R. Rasmussen, The Oregon Graduate Institute of Science and Technology, 20000 N.W. Walker Rd., Beaverton, Oregon 97006, 503-690-1077, and is illustrated in Figure 3. This flow system uses, in order, a pump, a mechanical flow regulator, and a mechanical compensation flow restrictive device. In this configuration the pump is purged with a large sample flow, thereby eliminating the need for an auxiliary vacuum pump to flush the sample inlet.]

7.1.2.2 Other Supporting Materials. All other components of the pressurized sampling system are similar to components discussed in Sections 7.1.1.1 through 7.1.1.17.

7.2 Analytical Apparatus

7.2.1 Sampling/Concentrator System (many commercial alternatives are available).

7.2.1.1 Electronic Mass Flow Controllers. Used to maintain constant flow (for purge gas, carrier gas and sample gas) and to provide an analog output to monitor flow anomalies.

7.2.1.2 Vacuum Pump. General purpose laboratory pump, capable of reducing the downstream pressure of the flow controller to provide the pressure differential necessary to maintain controlled flow rates of sample air.

7.2.1.3 Stainless Steel Tubing and Stainless Steel Fittings. Coated with fused silica to minimize active adsorption sites.

7.2.1.4 Stainless Steel Cylinder Pressure Regulators. Standard, two-stage cylinder regulators with pressure gauges.

7.2.1.5 Gas Purifiers. Used to remove organic impurities and moisture from gas streams.

7.2.1.6 Six-port Gas Chromatographic Valve. For routing sample and carrier gas flows.

7.2.1.7 Multisorbent Concentrator. Solid adsorbent packing with various retentive properties for adsorbing trace gases are commercially available from several sources. The packing contains more than one type of adsorbent packed in series.

7.2.1.7.1A pre-packed adsorbent trap (Supelco 2-0321) containing 200 mg Carbopack B (60/80 mesh) and 50 mg Carbosieve S-III (60/80 mesh) has been found to retain VOCs and allow some water vapor to pass through (6). The addition of a dry purging step allows for further water removal from the adsorbent trap. The steps constituting the dry purge technique that are normally used with multisorbent traps are illustrated in Figure 4. The optimum trapping and dry purging procedure for the Supelco trap consists of a sample volume of 320 mL and a dry nitrogen purge of 1300 mL. Sample trapping and drying is carried out at 25°C. The trap is back-flushed with helium and heated to 220°C to transfer material onto the GC column. A trap bake-out at 260°C for 5 minutes is conducted after each run.

7.2.1.7.2 An example of the effectiveness of dry purging is shown in Figure 5. The multisorbent used in this case is Tenax/Ambersorb 340/Charcoal (7). Approximately 20% of the initial water content in the sample remains after sampling 500 mL of air. The detector response to water vapor (hydrogen atoms detected by atomic emission detection) is plotted versus purge gas volume. Additional water reduction by a factor of 8 is indicated at temperatures of 45°C or higher. Still further water reduction is possible using a two-stage concentration/dryer system.

7.2.1.8 Cryogenic Concentrator. Complete units are commercially available from several vendor sources. The characteristics of the latest concentrators include a rapid, "ballistic" heating of the concentrator to release any trapped VOCs into a small carrier gas volume. This facilitates the separation of compounds on the gas chromatographic column.

7.2.2 Gas Chromatographic/Mass Spectrometric (GC/MS) System.

7.2.2.1 Gas Chromatograph. The gas chromatographic (GC) system must be capable of temperature programming. The column oven can be cooled to subambient temperature (e.g., -50°C) at the start of the gas chromatographic run to effect a resolution of the very volatile organic compounds. In other designs, the rate of release of compounds from the focusing trap in a two stage system obviates the need for retrapping of compounds on the column. The system must include or be interfaced to a concentrator and have all required accessories including analytical columns and gases. All GC carrier gas lines must be constructed from stainless steel or copper tubing. Non-polytetrafluoroethylene (PTFE) thread sealants or flow controllers with Buna-N rubber components must not be used.

7.2.2.2 Chromatographic Columns. 100% methyl silicone or 5% phenyl, 95% methyl silicone fused silica capillary columns of 0.25- to 0.53-mm I.D. of varying lengths are recommended for separation of many of the possible subsets of target compounds involving nonpolar compounds. However, considering the diversity of the target list, the choice is left to the operator subject to the performance standards given in Section 11.

7.2.2.3 Mass Spectrometer. Either a linear quadrupole or ion trap mass spectrometer can be used as long as it is capable of scanning from 35 to 300 amu every 1 second or less, utilizing 70 volts (nominal) electron energy in the electron impact ionization mode, and producing a mass spectrum which meets all the instrument performance acceptance criteria when 50 ng or less of p-bromofluorobenzene (BFB) is analyzed.

7.2.2.3.1Linear Quadrupole Technology. A simplified diagram of the heart of the quadrupole mass spectrometer is shown in Figure 6. The quadrupole consists of a parallel set of four rod electrodes mounted in a square configuration. The field within the analyzer is created by coupling opposite pairs of rods together and applying radiofrequency (RF) and direct current (DC) potentials between the pairs of rods. Ions created in the ion source from the reaction of column eluates with electrons from the electron source are moved through the

parallel array of rods under the influence of the generated field. Ions which are successfully transmitted through the quadrupole are said to possess stable trajectories and are subsequently recorded with the detection system. When the DC potential is zero, a wide band of m/z values is transmitted through the quadrupole. This "RF only" mode is referred to as the "total-ion" mode. In this mode, the quadrupole acts as a strong focusing lens analogous to a high pass filter. The amplitude of the RF determines the low mass cutoff. A mass spectrum is generated by scanning the DC and RF voltages using a fixed DC/RF ratio and a constant drive frequency or by scanning the frequency and holding the DC and RF constant. With the quadrupole system only 0.1 to 0.2 percent of the ions formed in the ion source actually reach the detector.

7.2.2.3.2Ion Trap Technology. An ion-trap mass spectrometer consists of a chamber formed between two metal surfaces in the shape of a hyperboloid of one sheet (ring electrode) and a hyperboloid of two sheets (the two end-cap electrodes). Ions are created within the chamber by electron impact from an electron beam admitted through a small aperture in one of the end caps. Radio frequency (RF) (and sometimes direct current voltage offsets) are applied between the ring electrode and the two end-cap electrodes establishing a quadrupole electric field. This field is uncoupled in three directions so that ion motion can be considered independently in each direction; the force acting upon an ion increases with the displacement of the ion from the center of the field but the direction of the force depends on the instantaneous voltage applied to the ring electrode. A restoring force along one coordinate (such as the distance, r, from the ion-trap's axis of radial symmetry) will exist concurrently with a repelling force along another coordinate (such as the distance, z, along the ion traps axis), and if the field were static the ions would eventually strike an electrode. However, in an RF field the force along each coordinate alternates direction so that a stable trajectory may be possible in which the ions do not strike a surface. In practice, ions of appropriate mass-to-charge ratios may be trapped within the device for periods of milliseconds to hours. A diagram of a typical ion trap is illustrated in Figure 7. Analysis of stored ions is performed by increasing the RF voltage, which makes the ions successively unstable. The effect of the RF voltage on the ring electrode is to "squeeze" the ions in the xy plane so that they move along the z axis. Half the ions are lost to the top cap (held at ground potential); the remaining ions exit the lower end cap to be detected by the electron multiplier. As the energy applied to the ring electrode is increased, the ions are collected in order of increasing mass to produce a conventional mass spectrum. With the ion trap, approximately 50 percent of the generated ions are detected. As a result, a significant increase in sensitivity can be achieved when compared to a full scan linear quadrupole system.

7.2.2.4 GC/MS Interface. Any gas chromatograph to mass spectrometer interface that gives acceptable calibration points for each of the analytes of interest and can be used to achieve all acceptable performance criteria may be used. Gas chromatograph to mass spectrometer interfaces constructed of all-glass, glass-lined, or fused silica-lined materials are recommended. Glass and fused silica should be deactivated.

7.2.2.5 Data System. The computer system that is interfaced to the mass spectrometer must allow the continuous acquisition and storage, on machine readable media, of all mass spectra obtained throughout the duration of the chromatographic program. The computer must have software that allows searching any GC/MS data file for ions of a specified mass and plotting such ion abundances versus time or scan number. This type of plot is defined as a Selected Ion Current Profile (SICP). Software must also be available that allows integrating the abundance in any SICP between specified time or scan number limits. Also, software must be available that allows for the comparison of sample spectra with reference library spectra. The National Institute of Standards and Technology (NIST) or Wiley Libraries or equivalent are recommended as reference libraries.

7.2.2.6 Off-line Data Storage Device. Device must be capable of rapid recording and retrieval of data and must be suitable for long-term, off-line data storage.

7.3 Calibration System and Manifold Apparatus (see Figure 8)

7.3.1 Calibration Manifold. Stainless steel, glass, or high purity quartz manifold, (e.g.,1.25-cm I.D. x 66-cm) with sampling ports and internal baffles for flow disturbance to ensure proper mixing. The manifold should be heated to ~50°C.

7.3.2 Humidifier. 500-mL impinger flask containing HPLC grade deionized water.

7.3.3 Electronic Mass Flow Controllers. One 0 to 5 L/min unit and one or more 0 to 100 mL/min units for air, depending on number of cylinders in use for calibration.

7.3.4 Teflon Filter(s). 47-mm Teflon® filter for particulate collection.

7.4 Reagents

7.4.1 Neat Materials or Manufacturer-Certified Solutions/Mixtures. Best source (see Section 9).

7.4.2 Helium and Air. Ultra-high purity grade in gas cylinders. He is used as carrier gas in the GC.

7.4.3 Liquid Nitrogen or Liquid Carbon Dioxide. Used to cool secondary trap.

7.4.4 Deionized Water. High performance liquid chromatography (HPLC) grade, ultra-high purity (for humidifier).

8. Collection of Samples in Canisters

8.1 Introduction

8.1.1 Canister samplers, sampling procedures, and canister cleaning procedures have not changed very much from the description given in the original Compendium Method TO-14. Much of the material in this section is therefore simply a restatement of the material given in Compendium Method TO-14, repeated here in order to have all the relevant information in one place.

8.1.2 Recent notable additions to the canister technology has been in the application of canister-based systems for example, to microenvironmental monitoring (8), the capture of breath samples (9), and sector sampling to identify emission sources of VOCs (10).

8.1.3 EPA has also sponsored the development of a mathematical model to predict the storage stability of arbitrary mixtures of trace gases in humidified air (3), and the investigation of the SilcoSteel™ process of coating the canister interior with a film of fused silica to reduce surface activity (11). A recent summary of storage stability data for VOCs in canisters is given in the open literature (5).

8.2 Sampling System Description

8.2.1 Subatmospheric Pressure Sampling [see Figure 1 (without metal bellows type pump)].

8.2.1.1 In preparation for subatmospheric sample collection in a canister, the canister is evacuated to 0.05 mm Hg (see Appendix C for discussion of evacuation pressure). When the canister is opened to the atmosphere containing the VOCs to be sampled, the differential pressure causes the sample to flow into the canister. This technique may be used to collect grab samples (duration of 10 to 30 seconds) or time-weighted-average (TWA) samples (duration of 1-24 hours) taken through a flow-restrictive inlet (e.g., mass flow controller, critical orifice).

8.2.1.2 With a critical orifice flow restrictor, there will be a decrease in the flow rate as the pressure approaches atmospheric. However, with a mass flow controller, the subatmospheric sampling system can maintain a constant flow rate from full vacuum to within about 7 kPa (1.0 psi) or less below ambient pressure.

8.2.2 Pressurized Sampling [see Figure 1 (with metal bellows type pump)].

8.2.2.1 Pressurized sampling is used when longer-term integrated samples or higher volume samples are required. The sample is collected in a canister using a pump and flow control arrangement to achieve a typical 101-202 kPa (15-30 psig) final canister pressure. For example, a 6-liter evacuated canister can be filled at 10 mL/min for 24 hours to achieve a final pressure of 144 kPa (21 psig).

8.2.2.2 In pressurized canister sampling, a metal bellows type pump draws in air from the sampling manifold to fill and pressurize the sample canister.

8.2.3 All Samplers.

8.2.3.1 A flow control device is chosen to maintain a constant flow into the canister over the desired sample period. This flow rate is determined so the canister is filled (to about 88.1 kPa for subatmospheric pressure sampling or to about one atmosphere above ambient pressure for pressurized sampling) over the desired sample period. The flow rate can be calculated by:

$$F = \frac{P \times V}{T \times 60}$$

where:

F = flow rate, mL/min.
P = final canister pressure, atmospheres absolute. P is approximately equal to

$$\frac{\text{kPa gauge}}{101.2} + 1$$

V = volume of the canister, mL.
T = sample period, hours.

For example, if a 6-L canister is to be filled to 202 kPa (2 atmospheres) absolute pressure in 24 hours, the flow rate can be calculated by:

$$F = \frac{2 \times 6000}{24 \times 60} = 8.3 \text{ mL/min}$$

8.2.3.2 For automatic operation, the timer is designed to start and stop the pump at appropriate times for the desired sample period. The timer must also control the solenoid valve, to open the valve when starting the pump and to close the valve when stopping the pump.

8.2.3.3 The use of the Skinner Magnelatch valve (see Figure 2) avoids any substantial temperature rise that would occur with a conventional, normally closed solenoid valve that would have to be energized during the entire sample period. The temperature rise in the valve could cause outgassing of organic compounds from the Viton® valve seat material. The Skinner Magnelatch valve requires only a brief electrical pulse to open or close at the appropriate start and stop times and therefore experiences no temperature increase. The pulses may be obtained either with an electronic timer that can be programmed for short (5 to 60 seconds) ON periods, or with a conventional mechanical timer and a special pulse circuit. A simple electrical pulse circuit for operating the Skinner Magnelatch solenoid valve with a conventional mechanical timer is illustrated in Figure 2(a). However, with this simple circuit, the valve may operate unreliably during brief power interruptions or if the timer is manually switched on and off too fast. A better circuit incorporating a time-delay relay to provide more reliable valve operation is shown in Figure 2(b).

8.2.3.4 The connecting lines between the sample inlet and the canister should be as short as possible to minimize their volume. The flow rate into the canister should remain relatively constant over the entire sampling period.

8.2.3.5 As an option, a second electronic timer may be used to start the auxiliary pump several hours prior to the sampling period to flush and condition the inlet line.

8.2.3.6 Prior to field use, each sampling system must pass a humid zero air certification (see Section 8.4.3). All plumbing should be checked carefully for leaks. The canisters must also pass a humid zero air certification before use (see Section 8.4.1).

8.3 Sampling Procedure

8.3.1 The sample canister should be cleaned and tested according to the procedure in Section 8.4.1.

8.3.2 A sample collection system is assembled as shown in Figures 1 and 3 and must be cleaned according to the procedure outlined in Sections 8.4.2 and 8.4.4.

[Note: The sampling system should be contained in an appropriate enclosure.]

8.3.3 Prior to locating the sampling system, the user may want to perform "screening analyses" using a portable GC system, as outlined in Appendix B of Compendium Method TO-14A, to determine potential volatile organics present and potential "hot spots." The information gathered from the portable GC screening analysis would be used in developing a monitoring protocol, which includes the sampling system location, based upon the "screening analysis" results.

8.3.4 After "screening analysis," the sampling system is located. Temperatures of ambient air and sampler box interior are recorded on the canister sampling field test data sheet (FTDS), as documented in Figure 9.

[Note: The following discussion is related to Figure 1]

8.3.5 To verify correct sample flow, a "practice" (evacuated) canister is used in the sampling system.

[Note: For a subatmospheric sampler, a flow meter and practice canister are needed. For the pump-driven system, the practice canister is not needed, as the flow can be measured at the outlet of the system.]

A certified mass flow meter is attached to the inlet line of the manifold, just in front of the filter. The canister is opened. The sampler is turned on and the reading of the certified mass flow meter is compared to the sampler mass flow controller. The values should agree within ±10%. If not, the sampler mass flow meter needs to be recalibrated or there is a leak in the system. This should be investigated and corrected.

[Note: Mass flow meter readings may drift. Check the zero reading carefully and add or subtract the zero reading when reading or adjusting the sampler flow rate to compensate for any zero drift.]

After 2 minutes, the desired canister flow rate is adjusted to the proper value (as indicated by the certified mass flow meter) by the sampler flow control unit controller (e.g., 3.5 mL/min for 24 hr, 7.0 mL/min for 12 hr). Record final flow under "CANISTER FLOW RATE" on the FTDS.

8.3.6 The sampler is turned off and the elapsed time meter is reset to 000.0.

[Note: Whenever the sampler is turned off, wait at least 30 seconds to turn the sampler back on.]

8.3.7 The "practice" canister and certified mass flow meter are disconnected and a clean certified (see Section 8.4.1) canister is attached to the system.

8.3.8 The canister valve and vacuum/pressure gauge valve are opened.

8.3.9 Pressure/vacuum in the canister is recorded on the canister FTDS (see Figure 9) as indicated by the sampler vacuum/pressure gauge.

8.3.10 The vacuum/pressure gauge valve is closed and the maximum-minimum thermometer is reset to current temperature. Time of day and elapsed time meter readings are recorded on the canister FTDS.

8.3.11 The electronic timer is set to start and stop the sampling period at the appropriate times. Sampling starts and stops by the programmed electronic timer.

8.3.12 After the desired sampling period, the maximum, minimum, current interior temperature and current ambient temperature are recorded on the FTDS. The current reading from the flow controller is recorded.

8.3.13 At the end of the sampling period, the vacuum/pressure gauge valve on the sampler is briefly opened and closed and the pressure/vacuum is recorded on the FTDS. Pressure should be close to desired pressure.

[Note: For a subatmospheric sampling system, if the canister is at atmospheric pressure when the field final pressure check is performed, the sampling period may be suspect. This information should be noted on the sampling field data sheet.]

Time of day and elapsed time meter readings are also recorded.

8.3.14 The canister valve is closed. The sampling line is disconnected from the canister and the canister is removed from the system. For a subatmospheric system, a certified mass flow meter is once again connected to the inlet manifold in front of the in-line filter and a "practice" canister is attached to the Magnelatch valve of the sampling system. The final flow rate is recorded on the canister FTDS (see Figure 9).

[Note: For a pressurized system, the final flow may be measured directly.]

The sampler is turned off.

8.3.15 An identification tag is attached to the canister. Canister serial number, sample number, location, and date, as a minimum, are recorded on the tag. The canister is routinely transported back to the analytical laboratory with other canisters in a canister shipping case.

8.4 Cleaning and Certification Program

8.4.1 Canister Cleaning and Certification.

8.4.1.1 All canisters must be clean and free of any contaminants before sample collection.

8.4.1.2 All canisters are leak tested by pressurizing them to approximately 206 kPa (30 psig) with zero air.

[Note: The canister cleaning system in Figure 10 can be used for this task.]

The initial pressure is measured, the canister valve is closed, and the final pressure is checked after 24 hours. If acceptable, the pressure should not vary more than ± 13.8 kPa (± 2 psig) over the 24 hour period.

8.4.1.3 A canister cleaning system may be assembled as illustrated in Figure 10. Cryogen is added to both the vacuum pump and zero air supply traps. The canister(s) are connected to the manifold. The vent shut-off valve and the canister valve(s) are opened to release any remaining pressure in the canister(s). The vacuum pump is started and the vent shut-off valve is then closed and the vacuum shut-off valve is opened. The canister(s) are evacuated to <0.05 mm Hg (see Appendix B) for at least 1 hour.

[Note: On a daily basis or more often if necessary, the cryogenic traps should be purged with zero air to remove any trapped water from previous canister cleaning cycles.]

Air released/evacuated from canisters should be diverted to a fume hood.

8.4.1.4 The vacuum and vacuum/pressure gauge shut-off valves are closed and the zero air shut-off valve is opened to pressurize the canister(s) with humid zero air to approximately 206 kPa (30 psig). If a zero gas generator system is used, the flow rate may need to be limited to maintain the zero air quality.

8.4.1.5 The zero air shut-off valve is closed and the canister(s) is allowed to vent down to atmospheric pressure through the vent shut-off valve. The vent shut-off valve is closed. Repeat Sections 8.4.1.3 through 8.4.1.5 two additional times for a total of three (3) evacuation/pressurization cycles for each set of canisters.

8.4.1.6 At the end of the evacuation/pressurization cycle, the canister is pressurized to 206 kPa (30 psig) with humid zero air. The canister is then analyzed by a GC/MS analytical system. Any canister that has not tested clean (compared to direct analysis of humidified zero air of less than 0.2 ppbv of targeted VOCs) should not be used. As a "blank" check of the canister(s) and cleanup procedure, the final humid zero air fill of 100% of the canisters is analyzed until the cleanup system and canisters are proven reliable (less than 0.2 ppbv of any target VOCs). The check can then be reduced to a lower percentage of canisters.

8.4.1.7 The canister is reattached to the cleaning manifold and is then reevacuated to <0.05 mm Hg (see Appendix B) and remains in this condition until used. The canister valve is closed. The canister is removed from the cleaning system and the canister connection is capped with a stainless steel fitting. The canister is now ready for collection of an air sample. An identification tag is attached to the inlet of each canister for field notes and chain-of-custody purposes. An alternative to evacuating the canister at this point is to store the canisters and reevacuate them just prior to the next use.

8.4.1.8 As an option to the humid zero air cleaning procedures, the canisters are heated in an isothermal oven not to exceed 100°C during evacuation of the canister to ensure that higher molecular weight compounds are not retained on the walls of the canister.

[Note: For sampling more complex VOC mixtures the canisters should be heated to higher temperatures during the cleaning procedure although a special high temperature valve would be needed].

Once heated, the canisters are evacuated to <0.05 mm Hg (see Appendix B) and maintained there for 1 hour. At the end of the heated/evacuated cycle, the canisters are pressurized with humid zero air and analyzed by a GC/MS system after a minimum of 12 hrs of "aging." Any canister that has not tested clean (less than 0.2 ppbv each of targeted compounds) should not be used. Once tested clean, the canisters are reevacuated to <0.05 mm Hg (see Appendix B) and remain in the evacuated state until used. As noted in Section 8.4.1.7, reevacuation can occur just prior to the next use.

8.4.2 Cleaning Sampling System Components.

8.4.2.1 Sample components are disassembled and cleaned before the sampler is assembled. Nonmetallic parts are rinsed with HPLC grade deionized water and dried in a vacuum oven at 50°C. Typically, stainless steel parts and fittings are cleaned by placing them in a beaker of methanol in an ultrasonic bath for 15 minutes. This procedure is repeated with hexane as the solvent.

8.4.2.2 The parts are then rinsed with HPLC grade deionized water and dried in a vacuum oven at 100°C for 12 to 24 hours.

8.4.2.3 Once the sampler is assembled, the entire system is purged with humid zero air for 24 hours.

8.4.3 Zero Air Certification.

[Note: In the following sections, "certification" is defined as evaluating the sampling system with humid zero air and humid calibration gases that pass through all active components of the sampling system. The system is "certified" if no significant additions or deletions (less than 0.2 ppbv each of target compounds) have occurred when challenged with the test gas stream.]

8.4.3.1 The cleanliness of the sampling system is determined by testing the sampler with humid zero air without an evacuated gas sampling canister, as follows.

8.4.3.2 The calibration system and manifold are assembled, as illustrated in Figure 8. The sampler (without an evacuated gas canister) is connected to the manifold and the zero air cylinder is activated to generate a humid gas stream (2 L/min) to the calibration manifold [see Figure 8(b)].

8.4.3.3 The humid zero gas stream passes through the calibration manifold, through the sampling system (without an evacuated canister) to the water management system/VOC preconcentrator of an analytical system.

[Note: The exit of the sampling system (without the canister) replaces the canister in Figure 11.]

After the sample volume (e.g., 500 mL) is preconcentrated on the trap, the trap is heated and the VOCs are thermally desorbed and refocussed on a cold trap. This trap is heated and the VOCs are thermally desorbed onto the head of the capillary column. The VOCs are refocussed prior to gas chromatographic separation. Then, the oven temperature (programmed) increases and the VOCs begin to elute and are detected by a GC/MS (see Section 10) system. The analytical system should not detect greater than 0.2 ppbv of any targeted VOCs in order for the sampling system to pass the humid zero air certification test. Chromatograms (using an FID) of a certified sampler and contaminated sampler are illustrated in Figures 12(a) and 12(b), respectively. If the sampler passes the humid zero air test, it is then tested with humid calibration gas standards containing selected VOCs at concentration levels expected in field sampling (e.g., 0.5 to 2 ppbv) as outlined in Section 8.4.4.

8.4.4 Sampler System Certification with Humid Calibration Gas Standards from a Dynamic Calibration System

8.4.4.1 Assemble the dynamic calibration system and manifold as illustrated in Figure 8.

8.4.4.2 Verify that the calibration system is clean (less than 0.2 ppbv of any target compounds) by sampling a humidified gas stream, *without* gas calibration standards, with a previously certified clean canister (see Section 8.1).

8.4.4.3 The assembled dynamic calibration system is certified clean if less than 0.2 ppbv of any targeted compounds is found.

8.4.4.4 For generating the humidified calibration standards, the calibration gas cylinder(s) containing nominal concentrations of 10 ppmv in nitrogen of selected VOCs is attached to the calibration system as illustrated in Figure 8. The gas cylinders are opened and the gas mixtures are passed through 0 to 10 mL/min certified mass flow controllers to generate ppb levels of calibration standards.

8.4.4.5 After the appropriate equilibrium period, attach the sampling system (containing a certified evacuated canister) to the manifold, as illustrated in Figure 8(b).

8.4.4.6 Sample the dynamic calibration gas stream with the sampling system.

8.4.4.7 Concurrent with the sampling system operation, realtime monitoring of the calibration gas stream is accomplished by the on-line GC/MS analytical system [Figure 8(a)] to provide reference concentrations of generated VOCs.

8.4.4.8 At the end of the sampling period (normally the same time period used for experiments), the sampling system canister is analyzed and compared to the reference GC/MS analytical system to determine if the concentration of the targeted VOCs was increased or decreased by the sampling system.

8.4.4.9 A recovery of between 90% and 110% is expected for all targeted VOCs.

8.4.5 Sampler System Certification without Compressed Gas Cylinder Standards.

8.4.5.1 Not all the gases on the Title III list are available/compatible with compressed gas standards. In these cases sampler certification must be approached by different means.

8.4.5.2 Definitive guidance is not currently available in these cases; however, Section 9.2 lists several ways to generate gas standards. In general, Compendium Method TO-14A compounds (see Table 1) are available commercially as compressed gas standards.

9. GC/MS Analysis of Volatiles from Canisters

9.1 Introduction

9.1.1 The analysis of canister samples is accomplished with a GC/MS system. Fused silica capillary columns are used to achieve high temporal resolution of target compounds. Linear quadrupole or ion trap mass spectrometers are employed for compound detection. The heart of the system is composed of the sample inlet concentrating device that is needed to increase sample loading into a detectable range. Two examples of concentrating systems are discussed. Other approaches are acceptable as long as they are compatible with achieving the system performance criteria given in Section 11.

9.1.2 With the first technique, a whole air sample from the canister is passed through a multisorbent packing (including single adsorbent packings) contained within a metal or glass tube maintained at or above the surrounding air temperature. Depending on the water retention properties of the packing, some or most of the water vapor passes completely through the trap during sampling. Additional drying of the sample is accomplished after the sample concentration is completed by forward purging the trap with clean, dry helium or another inert gas (air is not used). The sample is then thermally desorbed from the packing and backflushed from the trap onto a gas chromatographic column. In some systems a "refocusing" trap is placed between the primary trap and the gas chromatographic column. The specific system design downstream of the primary trap depends on technical factors such as the rate of thermal desorption and sampled volume, but the objective in most cases is to enhance chromatographic resolution of the individual sample components before detection on a mass spectrometer.

9.1.3 Sample drying strategies depend on the target list of compounds. For some target compound lists, the multisorbent packing of the concentrator can be selected from hydrophobic adsorbents which allow a high percentage of water vapor in the sample to pass through the concentrator during sampling and without significant loss of the target compounds. However, if very volatile organic compounds are on the target list, the adsorbents required for their retention may also strongly retain water vapor and a more lengthy dry purge is necessary prior to analysis.

9.1.4 With the second technique, a whole air sample is passed through a concentrator where the VOCs are condensed on a reduced temperature surface (cold trap). Subsequently, the condensed gases are thermally desorbed and backflushed from the trap with an inert gas onto a gas chromatographic column. This concentration technique is similar to that discussed in Compendium Method TO-14, although a membrane dryer is not used. The sample size is reduced in volume to limit the amount of water vapor that is also collected (100 mL or less may be necessary). The attendant reduction in sensitivity is offset by enhancing the sensitivity of detection, for example by using an ion trap detector.

9.2 Preparation of Standards

9.2.1 Introduction.

9.2.1.1 When available, standard mixtures of target gases in high pressure cylinders must be certified traceable to a NIST Standard Reference Material (SRM) or to a NIST/EPA approved Certified Reference Material (CRM). Manufacturer's certificates of analysis must be retained to track the expiration date.

9.2.1.2 The neat standards that are used for making trace gas standards must be of high purity; generally a purity of 98 percent or better is commercially available.

9.2.1.3 Cylinder(s) containing approximately 10 ppmv of each of the target compounds are typically used as primary stock standards. The components may be purchased in one cylinder or in separate cylinders depending on compatibility of the compounds and the pressure of the mixture in the cylinder. Refer to manufacturer's specifications for guidance on purchasing and mixing VOCs in gas cylinders.

9.2.2 Preparing Working Standards.

9.2.2.1 Instrument Performance Check Standard. Prepare a standard solution of BFB in humidified zero air at a concentration which will allow collection of 50 ng of BFB or less under the optimized concentration parameters.

9.2.2.2 Calibration Standards. Prepare five working calibration standards in humidified zero air at a concentration which will allow collection at the 2, 5, 10, 20, and 50 ppbv level for each component under the optimized concentration parameters.

9.2.2.3 Internal Standard Spiking Mixture. Prepare an internal spiking mixture containing bromochloromethane, chlorobenzene-d_5, and 1,4-difluorobenzene at 10 ppmv each in humidified zero air to be added to the sample or calibration standard. 500 µL of this mixture spiked into 500 mL of sample will result in a concentration of 10 ppbv. The internal standard is introduced into the trap during the collection time for all calibration, blank, and sample analyses using the apparatus shown in Figure 13 or by equivalent means. The volume of internal standard spiking mixture added for each analysis must be the same from run to run.

9.2.3 Standard Preparation by Dynamic Dilution Technique.

9.2.3.1 Standards may be prepared by dynamic dilution of the gaseous contents of a cylinder(s) containing the gas calibration stock standards with humidified zero air using mass flow controllers and a calibration manifold. The working standard may be delivered from the manifold to a clean, evacuated canister using a pump and mass flow controller.

9.2.3.2 Alternatively, the analytical system may be calibrated by sampling directly from the manifold if the flow rates are optimized to provide the desired amount of calibration standards. However, the use of the canister as a reservoir prior to introduction into the concentration system resembles the procedure normally used to collect samples and is preferred. Flow rates of the dilution air and cylinder standards (all expressed in the same units) are measured using a bubble meter or calibrated electronic flow measuring device, and the concentrations of target compounds in the manifold are then calculated using the dilution ratio and the original concentration of each compound.

$$\text{Manifold Conc.} = \frac{(\text{Original Conc.})\ (\text{Std. Gas Flowrate})}{(\text{Air Flowrate}) + (\text{Std. Gas Flowrate})}$$

9.2.3.3 Consider the example of 1 mL/min flow of 10 ppmv standard diluted with 1,000 mL/min of humid air provides a nominal 10 ppbv mixture, as calculated below:

$$\text{Manifold Conc.} = \frac{(10\ \text{ppm})(1\ \text{mL/min})(1000\ \text{ppb}/1\ \text{ppm})}{(1000\ \text{mL/min}) + (1\ \text{mL/min})} = 10\ \text{ppb}$$

9.2.4 Standard Preparation by Static Dilution Bottle Technique

[Note: Standards may be prepared in canisters by spiking the canister with a mixture of components prepared in a static dilution bottle (12). This technique is used specifically for liquid standards.]

9.2.4.1 The volume of a clean 2-liter round-bottom flask, modified with a threaded glass neck to accept a Mininert septum cap, is determined by weighing the amount of water required to completely fill up the flask. Assuming a density for the water of 1 g/mL, the weight of the water in grams is taken as the volume of the flask in milliliters.

9.2.4.2 The flask is flushed with helium by attaching a tubing into the glass neck to deliver the helium. After a few minutes, the tubing is removed and the glass neck is immediately closed with a Mininert septum cap.

9.2.4.3 The flask is placed in a 60°C oven and allowed to equilibrate at that temperature for about 15 minutes. Predetermined aliquots of liquid standards are injected into the flask making sure to keep the flask temperature constant at 60°C.

9.2.4.4 The contents are allowed to equilibrate in the oven for at least 30 minutes. To avoid condensation, syringes must be preheated in the oven at the same temperature prior to withdrawal of aliquots to avoid condensation.

9.2.4.5 Sample aliquots may then be taken for introduction into the analytical system or for further dilution. An aliquot or aliquots totaling greater than 1 percent of the flask volume should be avoided.

9.2.4.6 Standards prepared by this method are stable for one week. The septum must be replaced with each freshly prepared standard.

9.2.4.7 The concentration of each component in the flask is calculated using the following equation:

$$\text{Concentration, mg/L} = \frac{(V_a)(d)}{V_f}$$

where: V_a = Volume of liquid neat standard injected into the flask, µL.
d = Density of the liquid neat standard, mg/µL.
V_f = Volume of the flask, L.

9.2.4.8 To obtain concentrations in ppbv, the equation given in Section 9.2.5.7 can be used.

[Note: In the preparation of standards by this technique, the analyst should make sure that the volume of neat standard injected into the flask does not result in an overpressure due to the higher partial pressure produced by the standard compared to the vapor pressure in the flask. Precautions should also be taken to avoid a significant decrease in pressure inside the flask after withdrawal of aliquot(s).]

9.2.5 Standard Preparation Procedure in High Pressure Cylinders

[Note: Standards may be prepared in high pressure cylinders (13). A modified summary of the procedure is provided below.]

9.2.5.1 The standard compounds are obtained as gases or neat liquids (greater than 98 percent purity).

9.2.5.2 An aluminum cylinder is flushed with high-purity nitrogen gas and then evacuated to better than 25 in. Hg.

9.2.5.3 Predetermined amounts of each neat standard compound are measured using a microliter or gastight syringe and injected into the cylinder. The cylinder is equipped with a heated injection port and nitrogen flow to facilitate sample transfer.

9.2.5.4 The cylinder is pressurized to 1000 psig with zero nitrogen.

[Note: User should read all SOPs associated with generating standards in high pressure cylinders. Follow all safety requirements to minimize danger from high pressure cylinders.]

9.2.5.5 The contents of the cylinder are allowed to equilibrate (~24 hrs) prior to withdrawal of aliquots into the GC system.

9.2.5.6 If the neat standard is a gas, the cylinder concentration is determined using the following equation:

$$\text{Concentration, ppbv} = \frac{\text{Volume}_{\text{standard}}}{\text{Volume}_{\text{dilution gas}}} \times 10^9$$

[Note: Both values must be expressed in the same units.]

9.2.5.7 If the neat standard is a liquid, the gaseous concentration can be determined using the following equations:

$$V = \frac{nRT}{P}$$

and:

$$n = \frac{(mL)(d)}{MW}$$

where:
- V = Gaseous volume of injected compound at EPA standard temperature (25°C) and pressure (760 mm Hg), L.
- n = Moles.
- R = Gas constant, 0.08206 L-atm/mole °K.
- T = 298°K (standard temperature).
- P = 1 standard pressure, 760 mm Hg (1 atm).
- mL = Volume of liquid injected, mL.
- d = Density of the neat standard, g/mL.
- MW = Molecular weight of the neat standard expressed, g/g-mole.

The gaseous volume of the injected compound is divided by the cylinder volume at STP and then multiplied by 10^9 to obtain the component concentration in ppb units.

9.2.6 Standard Preparation by Water Methods.

[Note: Standards may be prepared by a water purge and trap method (14) and summarized as follows].

9.2.6.1 A previously cleaned and evacuated canister is pressurized to 760 mm Hg absolute (1 atm) with zero grade air.

9.2.6.2 The air gauge is removed from the canister and the sparging vessel is connected to the canister with the short length of 1/16 in. stainless steel tubing.

[Note: Extra effort should be made to minimize possible areas of dead volume to maximize transfer of analytes from the water to the canister.]

9.2.6.3 A measured amount of the stock standard solution and the internal standard solution is spiked into 5 mL of water.

9.2.6.4 This water is transferred into the sparge vessel and purged with nitrogen for 10 mins at 100 mL/min. The sparging vessel is maintained at 40°C.

9.2.6.5 At the end of 10 mins, the sparge vessel is removed and the air gauge is re-installed, to further pressurize the canister with pure nitrogen to 1500 mm Hg absolute pressure (approximately 29 psia).

9.2.6.6 The canister is allowed to equilibrate overnight before use.

9.2.6.7 A schematic of this approach is shown in Figure 14.

9.2.7 Preparation of Standards by Permeation Tubes.

9.2.7.1 Permeation tubes can be used to provide standard concentration of a trace gas or gases. The permeation of the gas can occur from inside a permeation tube containing the trace species of interest to an air stream outside. Permeation can also occur from outside a permeable membrane tube to an air stream passing through the tube (e.g., a tube of permeable material immersed in a liquid).

9.2.7.2 The permeation system is usually held at a constant temperature to generate a constant concentration of trace gas. Commercial suppliers provide systems for generation and dilution of over 250 compounds. Some commercial suppliers of permeation tube equipment are listed in Appendix D.

9.2.8 Storage of Standards.

9.2.8.1 Working standards prepared in canisters may be stored for thirty days in an atmosphere free of potential contaminants.

9.2.8.2 It is imperative that a storage logbook be kept to document storage time.

10. GC/MS Operating Conditions

10.1 Preconcentrator

The following are typical cryogenic and adsorbent preconcentrator analytical conditions which, however, depend on the specific combination of solid sorbent and must be selected carefully by the operator. The reader is referred to Tables 1 and 2 of Compendium Method TO-17 for guidance on selection of sorbents. An example of a system using a solid adsorbent preconcentrator with a cryofocusing trap is discussed in the literature (15). Oven temperature programming starts above ambient.

10.1.1 Sample Collection Conditions

Cryogenic Trap	Adsorbent Trap

Set point	-150°C	Set point	27°C
Sample volume	- up to 100 mL	Sample volume	- up to 1,000 mL
Carrier gas purge flow	- none	Carrier gas purge flow	- selectable

[Note: The analyst should optimize the flow rate, duration of sampling, and absolute sample volume to be used. Other preconcentration systems may be used provided performance standards (see Section 11) are realized.]

10.1.2 Desorption Conditions

Cryogenic Trap		Adsorbent Trap	
Desorb Temperature	120°C	Desorb Temperature	Variable
Desorb Flow Rate	~ 3 mL/min He	Desorb Flow Rate	~3 mL/min He
Desorb Time	<60 sec	Desorb Time	<60 sec

The adsorbent trap conditions depend on the specific solid adsorbents chosen (see manufacturers' specifications).

10.1.3 Trap Reconditioning Conditions.

Cryogenic Trap		Adsorbent Trap	
Initial bakeout	120°C (24 hrs)	Initial bakeout	
Variable (24 hrs)			
After each run	120°C (5 min)	After each run	Variable (5 min)

10.2 GC/MS System

10.2.1 Optimize GC conditions for compound separation and sensitivity. Baseline separation of benzene and carbon tetrachloride on a 100% methyl polysiloxane stationary phase is an indication of acceptable chromatographic performance.

10.2.2 The following are the recommended gas chromatographic analytical conditions when using a 50-meter by 0.3-mm I.D., 1 µm film thickness fused silica column with refocusing on the column.

Item	Condition	
Carrier Gas:	Helium	
Flow Rate:	Generally 1-3 mL/min as recommended by manufacturer	
Temperature Program:	Initial Temperature:	-50°C
	Initial Hold Time:	2 min
	Ramp Rate:	8° C/min
	Final Temperature:	200°C
	Final Hold Time:	Until all target compounds elute.

10.2.3 The following are the recommended mass spectrometer conditions:

Item	Condition

Electron Energy:	70 Volts (nominal)
Mass Range:	35-300 amu [the choice of 35 amu excludes the detection of some target compounds such as methanol and formaldehyde, and the quantitation of others such as ethylene oxide, ethyl carbamate, etc. (see Table 2). Lowering the mass range and using special programming features available on modern gas chromatographs will be necessary in these cases, but are not considered here.
Scan Time:	To give at least 10 scans per peak, not to exceed 1 second per scan].

A schematic for a typical GC/MS analytical system is illustrated in Figure 15.

10.3 Analytical Sequence

10.3.1 Introduction. The recommended GC/MS analytical sequence for samples during each 24-hour time period is as follows:

- Perform instrument performance check using bromofluorobenzene (BFB).
- Initiate multi-point calibration or daily calibration checks.
- Perform a laboratory method blank.
- Complete this sequence for analysis of ≤20 field samples.

10.4 Instrument Performance Check

10.4.1 Summary. It is necessary to establish that a given GC/MS meets tuning and standard mass spectral abundance criteria prior to initiating any data collection. The GC/MS system is set up according to the manufacturer's specifications, and the mass calibration and resolution of the GC/MS system are then verified by the analysis of the instrument performance check standard, bromofluorobenzene (BFB).

10.4.2 Frequency. Prior to the analyses of any samples, blanks, or calibration standards, the Laboratory must establish that the GC/MS system meets the mass spectral ion abundance criteria for the instrument performance check standard containing BFB. The instrument performance check solution must be analyzed initially and once per 24-hour time period of operation.

The 24-hour time period for GC/MS instrument performance check and standards calibration (initial calibration or daily calibration check criteria) begins at the injection of the BFB which the laboratory records as documentation of a compliance tune.

10.4.3 Procedure. The analysis of the instrument performance check standard is performed by trapping 50 ng of BFB under the optimized preconcentration parameters. The BFB is introduced from a cylinder into the GC/MS via a sample loop valve injection system similar to that shown in Figure 13.

The mass spectrum of BFB must be acquired in the following manner. Three scans (the peak apex scan and the scans immediately preceding and following the apex) are acquired and averaged. Background subtraction is conducted using a single scan prior to the elution of BFB.

10.4.4 Technical Acceptance Criteria. Prior to the analysis of any samples, blanks, or calibration standards, the analyst must establish that the GC/MS system meets the mass spectral ion abundance criteria for the instrument performance check standard as specified in Table 3.

10.4.5 Corrective Action. If the BFB acceptance criteria are not met, the MS must be retuned. It may be necessary to clean the ion source, or quadrupoles, or take other necessary actions to achieve the acceptance criteria.

10.4.6 Documentation. Results of the BFB tuning are to be recorded and maintained as part of the instrumentation log.

10.5 Initial Calibration

10.5.1 Summary. Prior to the analysis of samples and blanks but after the instrument performance check standard criteria have been met, each GC/MS system must be calibrated at five concentrations that span the monitoring range of interest in an initial calibration sequence to determine instrument sensitivity and the linearity of GC/MS response for the target compounds. For example, the range of interest may be 2 to 20 ppbv, in which case the five concentrations would be 1, 2, 5, 10 and 25 ppbv.

One of the calibration points from the initial calibration curve must be at the same concentration as the daily calibration standard (e.g., 10 ppbv).

10.5.2 Frequency. Each GC/MS system must be recalibrated following corrective action (e.g., ion source cleaning or repair, column replacement, etc.) which may change or affect the initial calibration criteria or if the daily calibration acceptance criteria have not been met.

If time remains in the 24-hour time period after meeting the acceptance criteria for the initial calibration, samples may be analyzed.

If time does not remain in the 24-hour period after meeting the acceptance criteria for the initial calibration, a new analytical sequence shall commence with the analysis of the instrument performance check standard followed by analysis of a daily calibration standard.

10.5.3 Procedure. Verify that the GC/MS system meets the instrument performance criteria in Section 10.4.

The GC must be operated using temperature and flow rate parameters equivalent to those in Section 10.2.2. Calibrate the preconcentration-GC/MS system by drawing the standard into the system. Use one of the standards preparation techniques described under Section 9.2 or equivalent.

A minimum of five concentration levels are needed to determine the instrument sensitivity and linearity. One of the calibration levels should be near the detection level for the compounds of interest. The calibration range should be chosen so that linear results are obtained as defined in Sections 10.5.1 and 10.5.5.

Quantitation ions for the target compounds are shown in Table 2. The primary ion should be used unless interferences are present, in which case a secondary ion is used.

10.5.4 Calculations.

[Note: In the following calculations, an internal standard approach is used to calculate response factors. The area response used is that of the primary quantitation ion unless otherwise stated.]

10.5.4.1 Relative Response Factor (RRF). Calculate the relative response factors for each target compound relative to the appropriate internal standard (i.e., standard with the nearest retention time) using the following equation:

$$RRF = \frac{A_x C_{is}}{A_{is} C_x}$$

where: RRF = Relative response factor.
A_x = Area of the primary ion for the compound to be measured, counts.
A_{is} = Area of the primary ion for the internal standard, counts.
C_{is} = Concentration of internal standard spiking mixture, ppbv.
C_x = Concentration of the compound in the calibration standard, ppbv.

[Note: The equation above is valid under the condition that the volume of internal standard spiking mixture added in all field and QC analyses is the same from run to run, and that the volume of field and QC sample introduced into the trap is the same for each analysis. C_{is} and C_x must be in the same units.]

10.5.4.2 Mean Relative Response Factor. Calculate the mean RRF for each compound by averaging the values obtained at the five concentrations using the following equation:

$$\overline{RRF} = \sum_{i=1}^{n} \frac{x_i}{n}$$

where: $\overline{RRF}$ = Mean relative response factor.
x_i = RRF of the compound at concentration i.
n = Number of concentration values, in this case 5.

10.5.4.3 Percent Relative Standard Deviation (%RSD). Using the RRFs from the initial calibration, calculate the %RSD for all target compounds using the following equations:

$$\%RSD = \frac{SD_{RRF}}{\overline{RRF}} \times 100$$

and

$$SD_{RRF} = \sqrt{\sum_{i=1}^{N} \frac{(RRF_i - \overline{RRF})^2}{N - 1}}$$

where: SD_{RRF} = Standard deviation of initial response factors (per compound).
RRF_i = Relative response factor at a concentration level i.
$\overline{RRF}$ = Mean of initial relative response factors (per compound).

10.5.4.4 Relative Retention Times (RRT). Calculate the RRTs for each target compound over the initial calibration range using the following equation:

$$RRT = \frac{RT_c}{RT_{is}}$$

where: RT_c = Retention time of the target compound, seconds
RT_{is} = Retention time of the internal standard, seconds.

10.5.4.5 Mean of the Relative Retention Times ($\overline{RRT}$). Calculate the mean of the relative retention times ($\overline{RRT}$) for each analyte target compound over the initial calibration range using the following equation:

$$\overline{RRT} = \sum_{i=1}^{n} \frac{RRT}{n}$$

where: $\overline{RRT}$ = Mean relative retention time for the target compound for each initial calibration standard.

RRT = Relative retention time for the target compound at each calibration level.

10.5.4.6 Tabulate Primary Ion Area Response (Y) for Internal Standard. Tabulate the area response (Y) of the primary ions (see Table 2) and the corresponding concentration for each compound and internal standard.

10.5.4.7 Mean Area Response ($\overline{Y}$) for Internal Standard. Calculate the mean area response ($\overline{Y}$) for each internal standard compound over the initial calibration range using the following equation:

$$\overline{Y} = \sum_{i=1}^{n} \frac{Y_i}{n}$$

where: $\overline{Y}$ = Mean area response.

Y = Area response for the primary quantitation ion for the internal standard for each initial calibration standard.

10.5.4.8 Mean Retention Times ($\overline{RT}$). Calculate the mean of the retention times ($\overline{RT}$) for each internal standard over the initial calibration range using the following equation:

$$\overline{RT} = \sum_{i=1}^{n} \frac{RT_i}{n}$$

where: $\overline{RT}$ = Mean retention time, seconds

RT = Retention time for the internal standard for each initial calibration standard, seconds.

10.5.5 Technical Acceptance Criteria for the Initial Calibration.

10.5.5.1 The calculated %RSD for the RRF for each compound in the calibration table must be less than 30% with at most two exceptions up to a limit of 40%.

[Note: This exception may not be acceptable for all projects. Many projects may have a specific target list of compounds which would require the lower limit for all compounds.]

10.5.5.2 The RRT for each target compound at each calibration level must be withiin 0.06 RRT units of the mean RRT for the compound.

10.5.5.3 The area response Y of at each calibration level must be within 40% of the mean area response $\overline{Y}$ over the initial calibration range for each internal standard.

10.5.5.4 The retention time shift for each of the internal standards at each calibration level must be within 20 s of the mean retention time over the initial calibration range for each internal standard.

10.5.6 Corrective Action.

10.5.6.1 Criteria. If the initial calibration technical acceptance criteria are not met, inspect the system for problems. It may be necessary to clean the ion source, change the column, or take other corrective actions to meet the initial calibration technical acceptance criteria.

10.5.6.2 Schedule. Initial calibration acceptance criteria *must* be met before any field samples, performance evaluation (PE) samples, or blanks are analyzed.

10.6 Daily Calibration

10.6.1 Summary. Prior to the analysis of samples and blanks but after tuning criteria have been met, the initial calibration of each GC/MS system must be routinely checked by analyzing a daily calibration standard to ensure that the instrument continues to remain under control. The daily calibration standard, which is the nominal 10 ppbv level calibration standard, should contain all the target compounds.

10.6.2 Frequency. A check of the calibration curve must be performed once every 24 hours on a GC/MS system that has met the tuning criteria. The daily calibration sequence starts with the injection of the BFB. If the BFB analysis meets the ion abundance criteria for BFB, then a daily calibration standard may be analyzed.

10.6.3 Procedure. The mid-level calibration standard (10 ppbv) is analyzed in a GC/MS system that has met the tuning and mass calibration criteria following the same procedure in Section 10.5.

10.6.4 Calculations. Perform the following calculations.

[Note: As indicated earlier, the area response of the primary quantitation ion is used unless otherwise stated.]

10.6.4.1 Relative Response Factor (RRF). Calculate a relative response factor (RRF) for each target compound using the equation in Section 10.5.4.1.

10.6.4.2 Percent Difference (%D). Calculate the percent difference in the RRF of the daily RRF (24-hour) compared to the mean RRF in the most recent initial calibration. Calculate the %D for each target compound using the following equation:

$$\%D = \frac{RRF_c - \overline{RRF_i}}{\overline{RRF_i}} \times 100$$

where: RRF_c = RRF of the compound in the continuing calibration standard.

$\overline{RRF_i}$ = Mean RRF of the compound in the most recent initial calibration.

10.6.5 Technical Acceptance Criteria. The daily calibration standard must be analyzed at the concentration level and frequency described in this Section 10.6 and on a GC/MS system meeting the BFB instrument performance check criteria (see Section 10.4).

The %D for each target compound in a daily calibration sequence must be within ±30 percent in order to proceed with the analysis of samples and blanks. A control chart showing %D values should be maintained.

10.6.6 Corrective Action. If the daily calibration technical acceptance criteria are not met, inspect the system for problems. It may be necessary to clean the ion source, change the column, or take other corrective actions to meet the daily calibration technical acceptance criteria.

Daily calibration acceptance criteria must be met before any field samples, performance evaluation (PE) samples, or blanks are analyzed. If the % D criteria are not met, it will be necessary to rerun the daily calibration sample.

10.7 Blank Analyses

10.7.1 Summary. To monitor for possible laboratory contamination, laboratory method blanks are analyzed at least once in a 24-hour analytical sequence. All steps in the analytical procedure are performed on the blank

using all reagents, standards, equipment, apparatus, glassware, and solvents that would be used for a sample analysis.

A laboratory method blank (LMB) is an unused, certified canister that has not left the laboratory. The blank canister is pressurized with humidified, ultra-pure zero air and carried through the same analytical procedure as a field sample. The injected aliquot of the blank must contain the same amount of internal standards that are added to each sample.

10.7.2 Frequency. The laboratory method blank must be analyzed after the calibration standard(s) and before any samples are analyzed.

Whenever a high concentration sample is encountered (i.e., outside the calibration range), a blank analysis should be performed immediately after the sample is completed to check for carryover effects.

10.7.3 Procedure. Fill a cleaned and evacuated canister with humidified zero air (RH >20 percent, at 25°C). Pressurize the contents to 2 atm.

The blank sample should be analyzed using the same procedure outlined under Section 10.8.

10.7.4 Calculations. The blanks are analyzed similar to a field sample and the equations in Section 10.5.4 apply.

10.7.5 Technical Acceptance Criteria. A blank canister should be analyzed daily.

The area response for each internal standard (IS) in the blank must be within ±40 percent of the mean area response of the IS in the most recent valid calibration.

The retention time for each of the internal standards must be within ±0.33 minutes between the blank and the most recent valid calibration.

The blank should not contain any target analyte at a concentration greater than its quantitation level (three times the MDL as defined in Section 11.2) and should not contain additional compounds with elution characteristics and mass spectral features that would interfere with identification and measurement of a method analyte.

10.7.6 Corrective Action. If the blanks do not meet the technical acceptance criteria, the analyst should consider the analytical system to be out of control. It is the responsibility of the analyst to ensure that contaminants in solvents, reagents, glassware, and other sample storage and processing hardware that lead to discrete artifacts and/or elevated baselines in gas chromatograms be eliminated. If contamination is a problem, the source of the contamination must be investigated and appropriate corrective measures need to be taken and documented before further sample analysis proceeds.

If an analyte in the blank is found to be out of control (i.e., contaminated) and the analyte is also found in associated samples, those sample results should be "flagged" as possibly contaminated.

10.8 Sample Analysis

10.8.1 Summary. An aliquot of the air sample from a canister (e.g., 500 mL) is preconcentrated and analyzed by GC/MS under conditions stated in Sections 10.1 and 10.2. If using the multisorbent/dry purge approach, adjust the dry purge volume to reduce water effects in the analytical system to manageable levels.

[Note: The analyst should be aware that pressurized samples of high humidity samples will contain condensed water. As a result, the humidity of the sample released from the canister during analysis will vary

in humidity, being lower at the higher canister pressures and increasing in humidity as the canister pressures decreases. Storage integrity of water soluble compounds may also be affected.]

10.8.2 Frequency. If time remains in the 24-hour period in which an initial calibration is performed, samples may be analyzed without analysis of a daily calibration standard.

If time does not remain in the 24-hour period since the injection of the instrument performance check standard in which an initial calibration is performed, both the instrument performance check standard and the daily calibration standard should be analyzed before sample analysis may begin.

10.8.3 Procedure for Instrumental Analysis. Perform the following procedure for analysis.

10.8.3.1 All canister samples should be at temperature equilibrium with the laboratory.

10.8.3.2 Check and adjust the mass flow controllers to provide correct flow rates for the system.

10.8.3.3 Connect the sample canister to the inlet of the GC/MS analytical system, as shown in Figure 15 [Figure 16 shows an alternate two stage concentrator using multisorbent traps followed by a trap cooled by a closed cycle cooler (15)]. The desired sample flow is established through the six-port chromatographic valve and the preconcentrator to the downstream flow controller. The absolute volume of sample being pulled through the trap must be consistent from run to run.

10.8.3.4 Heat/cool the GC oven and cryogenic or adsorbent trap to their set points. Assuming a six-port value is being used, as soon as the trap reaches its lower set point, the six-port chromatographic valve is cycled to the trap position to begin sample collection. Utilize the sample collection time which has been optimized by the analyst.

10.8.3.5 Use the arrangement shown in Figure 13, (i.e., a gastight syringe or some alternate method) introduce an internal standard during the sample collection period. Add sufficient internal standard equivalent to 10 ppbv in the sample. For example, a 0.5 mL volume of a mixture of internal standard compounds, each at 10 ppmv concentration, added to a sample volume of 500 mL, will result in 10 ppbv of each internal standard in the sample.

10.8.3.6 After the sample and internal standards are preconcentrated on the trap, the GC sampling valve is cycled to the inject position and the trap is swept with helium and heated. Assuming a focusing trap is being used, the trapped analytes are thermally desorbed onto a focusing trap and then onto the head of the capillary column and are separated on the column using the GC oven temperature program. The canister valve is closed and the canister is disconnected from the mass flow controller and capped. The trap is maintained at elevated temperature until the beginning of the next analysis.

10.8.3.7 Upon sample injection onto the column, the GC/MS system is operated so that the MS scans the atomic mass range from 35 to 300 amu. At least ten scans per eluting chromatographic peak should be acquired. Scanning also allows identification of unknown compounds in the sample through searching of library spectra.

10.8.3.8 Each analytical run must be checked for saturation. The level at which an individual compound will saturate the detection system is a function of the overall system sensitivity and the mass spectral characteristics of that compound.

10.8.3.9 Secondary ion quantitation is allowed only when there are sample matrix interferences with the primary ion. If secondary ion quantitation is performed, document the reasons in the laboratory record book.

10.8.4 Calculations. The equation below is used for calculating concentrations.

$$C_x = \frac{A_x C_{is} DF}{A_{is} \overline{RRF}}$$

where: C_x = Compound concentration, ppbv.

A_x = Area of the characteristic ion for the compound to be measured, counts.

A_{is} = Area of the characteristic ion for the specific internal standard, counts.

C_{is} = Concentration of the internal standard spiking mixture, ppbv

$\overline{RRF}$ = Mean relative response factor from the initial calibration.

DF = Dilution factor calculated as described in section 2. If no dilution is performed, DF = 1.

[Note: The equation above is valid under the condition that the volume (~500 µL) of internal standard spiking mixture added in all field and QC analyses is the same from run to run, and that the volume (~500 mL) of field and QC sample introduced into the trap is the same for each analysis.]

10.8.5 Technical Acceptance Criteria.

[Note: If the most recent valid calibration is an initial calibration, internal standard area responses and RTs in the sample are evaluated against the corresponding internal standard area responses and RTs in the mid level standard (10 ppbv) of the initial calibration.]

10.8.5.1 The field sample must be analyzed on a GC/MS system meeting the BFB tuning, initial calibration, and continuing calibration technical acceptance criteria at the frequency described in Sections 10.4, 10.5 and 10.6.

10.8.5.2 The field samples must be analyzed along with a laboratory method blank that met the blank technical acceptance criteria.

10.8.5.3 All of the target analyte peaks should be within the initial calibration range.

10.8.5.4 The retention time for each internal standard must be within ±0.33 minutes of the retention time of the internal standard in the most recent valid calibration.

10.8.6 Corrective Action. If the on-column concentration of any compound in any sample exceeds the initial calibration range, an aliquot of the original sample must be diluted and reanalyzed. Guidance in performing dilutions and exceptions to this requirement are given below.

- Use the results of the original analysis to determine the approximate dilution factor required to get the largest analyte peak within the initial calibration range.
- The dilution factor chosen should keep the response of the largest analyte peak for a target compound in the upper half of the initial calibration range of the instrument.

[Note: Analysis involving dilution should be reported with a dilution factor and nature of the dilution gas.]

10.8.6.1 Internal standard responses and retention times must be evaluated during or immediately after data acquisition. If the retention time for any internal standard changes by more than 20 sec from the latest daily (24-hour) calibration standard (or mean retention time over the initial calibration range), the GC/MS system must be inspected for malfunctions, and corrections made as required.

10.8.6.2 If the area response for any internal standard changes by more than ±40 percent between the sample and the most recent valid calibration, the GC/MS system must be inspected for malfunction and

corrections made as appropriate. When corrections are made, reanalysis of samples analyzed while the system was malfunctioning is necessary.

10.8.6.3 If, after reanalysis, the area responses or the RTs for all internal standards are inside the control limits, then the problem with the first analysis is considered to have been within the control of the Laboratory. Therefore, submit only data from the analysis with SICPs within the limits. This is considered the initial analysis and should be reported as such on all data deliverables.

11. Requirements for Demonstrating Method Acceptability for VOC Analysis from Canisters

11.1 Introduction

11.1.1 There are three performance criteria which must be met for a system to qualify under Compendium Method TO-15. These criteria are: the method detection limit of ≤0.5 ppbv, replicate precision within 25 percent, and audit accuracy within 30 percent for concentrations normally expected in contaminated ambient air (0.5 to 25 ppbv).

11.1.2 Either SIM or SCAN modes of operation can be used to achieve these criteria, and the choice of mode will depend on the number of target compounds, the decision of whether or not to determine tentatively identified compounds along with other VOCs on the target list, as well as on the analytical system characteristics.

11.1.3 Specific criteria for each Title III compound on the target compound list must be met by the analytical system. These criteria were established by examining summary data from EPA's Toxics Air Monitoring System Network and the Urban Air Toxics Monitoring Program network. Details for the determination of each of the criteria follow.

11.2 Method Detection Limit

11.2.1 The procedure chosen to define the method detection limit is that given in the *Code of Federal Regulations* (40 CFR 136 Appendix B).

11.2.2 The method detection limit is defined for each system by making seven replicate measurements of the compound of interest at a concentration near (within a factor of five) the expected detection limit, computing the standard deviation for the seven replicate concentrations, and multiplying this value by 3.14 (i.e., the Student's t value for 99 percent confidence for seven values). Employing this approach, the detection limits given in Table 4 were obtained for some of the VOCs of interest.

11.3 Replicate Precision

11.3.1 The measure of replicate precision used for this program is the absolute value of the difference between replicate measurements of the sample divided by the average value and expressed as a percentage as follows:

$$\text{percent difference} = \frac{|x_1 - x_2|}{\bar{x}} \times 100$$

where:

x_1 = First measurement value.

x_2 = Second measurement value.

$\bar{x}$ = Average of the two values.

11.3.2 There are several factors which may affect the precision of the measurement. The nature of the compound of interest itself such as molecular weight, water solubility, polarizability, etc., each have some effect on the precision, for a given sampling and analytical system. For example, styrene, which is classified as a polar VOC, generally shows slightly poorer precision than the bulk of nonpolar VOCs. A primary influence on precision is the concentration level of the compound of interest in the sample, i.e., the precision degrades as the concentration approaches the detection limit. A conservative measure was obtained from replicate analysis of "real world" canister samples from the TAMS and UATMP networks. These data are summarized in Table 5 and suggest that a replicate precision value of 25 percent can be achieved for each of the target compounds.

11.4 Audit Accuracy

11.4.1 A measure of analytical accuracy is the degree of agreement with audit standards. Audit accuracy is defined as the difference between the nominal concentration of the audit compound and the measured value divided by the audit value and expressed as a percentage, as illustrated in the following equation:

$$\text{Audit Accuracy, \%} = \frac{\text{Spiked Value} - \text{Observed Value}}{\text{Spiked Value}} \times 100$$

11.4.2 Audit accuracy results for TAMS and UATMP analyses are summarized in Table 6 and were used to form the basis for a selection of 30 percent as the performance criterion for audit accuracy.

12. References

1. *Compendium of Methods for the Determination of Toxic Organic Compounds in Ambient Air: Method TO-14A, Second Edition,* U. S. Environmental Protection Agency, Research Triangle Park, NC, EPA 600/625/R-96/010b, January 1997.

2. Winberry, W. T., Jr., et al., *Statement-of-Work (SOW) for the Analysis of Air Toxics From Superfund Sites*, U. S. Environmental Protection Agency, Office of Solid Waste, Contract Laboratory Program, Washington, D.C., Draft Report, June 1990.

3. Coutant, R.W., *Theoretical Evaluation of Stability of Volatile Organic Chemicals and Polar Volatile Organic Chemicals in Canisters*, U. S. Environmental Protection Agency, EPA Contract No. 68-DO-0007, Work Assignment No. 45, Subtask 2, Battelle, Columbus, OH, June 1993.

4. Kelly, T.J., Mukund, R., Gordon, S.M., and Hays, M.J., *Ambient Measurement Methods and Properties of the 189 Title III Hazardous Air Pollutants*, U. S. Environmental Protection Agency, EPA Contract No. 68-DO-0007, Work Assignment 44, Battelle, Columbus, OH, March 1994.

5. Kelly T. J. and Holdren, M.W., "Applicability of Canisters for Sample Storage in the Determination of Hazardous Air Pollutants," *Atmos. Environ.*, Vol. 29, 2595-2608, May 1995.

6. Kelly, T.J., Callahan, P.J., Pleil, J.K., and Evans, G.E., "Method Development and Field Measurements for Polar Volatile Organic Compounds in Ambient Air," *Environ. Sci. Technol.*, Vol. 27, 1146-1153, 1993.

7. McClenny, W.A., Oliver, K.D. and Daughtrey, E.H.., Jr. "Dry Purging of Solid Adsorbent Traps to Remove Water Vapor Before Thermal Desorption of Trace Organic Gases," *J. Air and Waste Manag. Assoc.*, Vol. 45, 792-800, June 1995.

8. Whitaker, D.A., Fortmann, R.C. and Lindstrom, A.B. "Development and Testing of a Whole Air Sampler for Measurement of Personal Exposures to Volatile Organic Compounds," *Journal of Exposure Analysis and Environmental Epidemiology*, Vol. 5, No. 1, 89-100, January 1995.

9. Pleil, J.D. and Lindstrom, A.B., "Collection of a Single Alveolar Exhaled Breath for Volatile Organic Compound Analysis," *American Journal of Industrial Medicine*, Vol. 28, 109-121, 1995.

10. Pleil, J.D. and McClenny, W.A., "Spatially Resolved Monitoring for Volatile Organic Compounds Using Remote Sector Sampling," *Atmos. Environ.*, Vol. 27A, No. 5, 739-747, August 1993.

11. Holdren, M.W., et al., Unpublished Final Report, EPA Contract 68-DO-0007, Battelle, Columbus, OH. Available from J.D. Pleil, MD-44, U. S. Environmental Protection Agency, Research Triangle Park, NC, 27711, 919-541-4680.

12. Morris, C.M., Burkley, R.E. and Bumgarner, J.E., "Preparation of Multicomponent Volatile Organic Standards Using Dilution Bottles," *Anal. Letts.*, Vol. 16 (A20), 1585-1593, 1983.

13. Pollack, A.J., Holdren, M.W., "Multi-Adsorbent Preconcentration and Gas Chromatographic Analysis of Air Toxics With an Automated Collection/Analytical System," in the *Proceedings of the 1990 EPA/A&WMA International Symposium of Measurement of Toxic and Related Air Pollutants*, U. S. Environmental Protection Agency, Research Triangle Park, NC, EPA/600/9-90-026, May 1990.

14. Stephenson, J.H.M., Allen, F., Slagle, T., "Analysis of Volatile Organics in Air via Water Methods" in *Proceedings of the 1990 EPA/A&WMA International Symposium on Measurement of Toxic and Related Air Pollutants*, U. S. Environmental Protection Agency, Research Triangle Park, NC, EPA 600/9-90-026, May 1990.

15. Oliver, K. D., Adams, J. R., Davehtrey, E. H., Jr., McClenny, W. A., Young, M. J., and Parade, M. A., "Techniques for Monitoring Toxices VOCs in Air: Sorbent Preconcentration Closed-Cycle Cooler Cryofocusing, and GC/MS Analysis," *Environ. Sci. Technol.*, Vol. 30, 1938-1945, 1996.

APPENDIX A.

LISTING OF SOME COMMERCIAL WATER MANAGEMENT SYSTEMS USED WITH AUTOGC SYSTEMS

Tekmar Dohrman Company
7143 East Kemper Road
Post Office Box 429576
Cincinnati, Ohio 45242-9576
(513) 247-7000
(513) 247-7050 (Fax)
(800) 543-4461
[Moisture control module]

Entech Laboratory Automation
950 Enchanted Way No. 101
Simi Valley, California 93065
(805) 527-5939
(805) 527-5687 (Fax)
[Microscale Purge and Trap]

Dynatherm Analytical Instruments
Post Office Box 159
Kelton, Pennsylvania 19346
(215) 869-8702
(215) 869-3885 (Fax)
[Thermal Desorption System]

XonTech Inc.
6862 Hayenhurst Avenue
Van Nuys, CA 91406
(818) 787-7380
(818) 787-4275 (Fax)
[Multi-adsorbent trap/dry purge]

Graseby
500 Technology Ct.
Smyrna, Georgia 30082
(770) 319-9999
(770) 319-0336 (Fax)
(800) 241-6898
[Controlled Desorption Trap]

Varian Chromatography System
2700 Mitchell Drive
Walnut Creek, California 94898
(510) 945-2196
(510) 945-2335 (FAX)
[Variable Temperature Adsorption Trap]

APPENDIX B.

COMMENT ON CANISTER CLEANING PROCEDURES

The canister cleaning procedures given in Section 8.4 require that canister pressure be reduced to <0.05mm Hg before the cleaning process is complete. Depending on the vacuum system design (diameter of connecting tubing, valve restrictions, etc.) and the placement of the vacuum gauge, the achievement of this value may take several hours. In any case, the pressure gauge should be placed near the canisters to determine pressure. The objective of requiring a low pressure evacuation during canister cleaning is to reduce contaminants. If canisters can be routinely certified (<0.2 ppbv for target compounds) while using a higher vacuum, then this criteria can be relaxed. However, the ultimate vacuum achieved during cleaning should always be <0.2mm Hg.

Canister cleaning as described in Section 8.4 and illustrated in Figure 10 requires components with special features. The vacuum gauge shown in Figure 10 must be capable of measuring 0.05mm Hg with less than a 20% error. The vacuum pump used for evacuating the canister must be noncontaminating while being capable of achieving the 0.05 mm Hg vacuum as monitored near the canisters. Thermoelectric vacuum gauges and turbomolecular drag pumps are typically being used for these two components.

An alternate to achieving the canister certification requirement of <0.2 ppbv for all target compounds is the criteria used in Compendium Method TO-12 that the total carbon count be <10ppbC. This check is less expensive and typically more exacting than the current certification requirement and can be used if proven to be equivalent to the original requirement. This equivalency must be established by comparing the total nonmethane organic carbon (TNMOC) expressed in ppbC to the requirement that individual target compounds be <0.2 ppbv for a series of analytical runs.

APPENDIX C.

LISTING OF COMMERCIAL MANUFACTURERS AND RE-SUPPLIERS OF SPECIALLY-PREPARED CANISTERS

BRC/Rasmussen
17010 NW Skyline Blvd.
Portland, Oregon 97321
(503) 621-1435

Meriter
1790 Potrero Drive
San Jose, CA 95124
(408) 265-6482

Restek Corporation
110 Benner Circle
Bellefonte, PA 16823-8812
(814) 353-1300
(800) 356-1688

Scientific Instrumentation Specialists
P.O. Box 8941
815 Courtney Street
Moscow, ID 83843
(208) 882-3860

Graseby
500 Technology Ct.
Smyrna, Georgia 30082
(404) 319-9999
(800) 241-6898

XonTech Inc.
6862 Hayenhurst Avenue
Van Nuys, CA 91406
(818) 787-7380

APPENDIX D.

LISTING OF COMMERCIAL SUPPLIERS OF PERMEATION TUBES AND SYSTEMS

Kin-Tek
504 Laurel St.
Lamarque, Texas 77568
(409) 938-3627
(800) 326-3627

Vici Metronics, Inc.
2991 Corvin Drive
Santa Clara, CA 95051
(408) 737-0550

Analytical Instrument Development, Inc.
Rt. 41 and Newark Rd.
Avondale, PA 19311
(215) 268-3181

Ecology Board, Inc.
9257 Independence Ave.
Chatsworth, CA 91311
(213) 882-6795

Tracor, Inc.
6500 Tracor Land
Austin, TX
(512) 926-2800

Metronics Associates, Inc.
3201 Porter Drive
Standford Industrial Park
Palo Alto, CA 94304
(415) 493-5632

TABLE 1. VOLATILE ORGANIC COMPOUNDS ON THE TITLE III CLEAN AIR AMENDMENT LIST--MEMBERSHIP IN COMPENDIUM METHOD TO-14A LIST AND THE SOW-CLP LIST OF VOCs

Compound	CAS No.	BP (°C)	v.p. (mmHg)[1]	MW[1]	TO-14A	CLP-SOW
Methyl chloride (chloromethane); CH3Cl	74-87-3	-23.7	3.8 x 10	50.5	X	X
Carbonyl sulfide; COS	463-58-1	-50.0	3.7 x 10	60.1		
Vinyl chloride (chloroethene); C2H3Cl	75-01-4	-14.0	3.2 x 10	62.5	X	X
Diazomethane; CH2N2	334-88-3	-23.0	2.8 x 10	42.1		
Formaldehyde; CH2O	50-00-0	-19.5	2.7 x 10	30		
1,3-Butadiene; C4H6	106-99-0	-4.5	2.0 x 10	54		X
Methyl bromide (bromomethane); CH3Br	74-83-9	3.6	1.8 x 10	94.9	X	X
Phosgene; CCl2O	75-44-5	8.2	1.2 x 10	99		
Vinyl bromide (bromoethene); C2H3Br	593-60-2	15.8	1.1 x 10	107		
Ethylene oxide; C2H4O	75-21-8	10.7	1.1 x 10	44		
Ethyl chloride (chloroethane); C2H5Cl	75-00-3	12.5	1.0 x 10	64.5	X	X
Acetaldehyde (ethanal); C2H4O	75-07-0	21.0	952	44		
Vinylidene chloride (1,1-dichloroethylene); C2H2Cl2	75-35-4	31.7	500	97	X	X
Propylene oxide; C3H6O	75-56-9	34.2	445	58		
Methyl iodide (iodomethane); CH3I	74-88-4	42.4	400	141.9		
Methylene chloride; CH2Cl2	75-09-2	40.0	349	84.9	X	X
Methyl isocyanate; C2H3NO	624-83-9	59.6	348	57.1		
Allyl chloride (3-chloropropene); C3H5Cl	107-05-1	44.5	340	76.5	X	X
Carbon disulfide; CS2	75-15-0	46.5	260	76		
Methyl tert-butyl ether; C5H12O	1634-04-4	55.2	249	86		
Propionaldehyde; C2H5CHO	123-38-6	49.0	235	58.1		
Ethylidene dichloride (1,1-dichloroethane); C2H4Cl2	75-34-3	57.0	230	99	X	

TABLE 1. (continued)

Compound	CAS No.	BP (°C)	v.p. (mmHg)[1]	MW[1]	TO-14A	CLP-SOW
Chloroprene (2-chloro-1,3-butadiene); C4H5Cl	126-99-8	59.4	226	88.5		
Chloromethyl methyl ether; C2H5ClO	107-30-2	59.0	224	80.5		
Acrolein (2-propenal); C3H4O	107-02-8	52.5	220	56		X
1,2-Epoxybutane (1,2-butylene oxide); C4H8O	106-88-7	63.0	163	72		
Chloroform; CHCl3	67-66-3	61.2	160	119	X	X
Ethyleneimine (aziridine); C2H5N	151-56-4	56	160.0	43		
1,1-Dimethylhydrazine; C2H8N2	57-14-7	63	157.0	60.0		
Hexane; C6H14	110-54-3	69.0	120	86.2	X	
1,2-Propyleneimine (2-methylaziridine); C3H7N	75-55-8	66.0	112	57.1		
Acrylonitrile (2-propenenitrile); C3H3N	107-13-1	77.3	100	53	X	
Methyl chloroform (1,1,1-trichloroethane); C2H3Cl3	71-55-6	74.1	100	133.4	X	X
Methanol; CH4O	67-56-1	65.0	92.0	32		X
Carbon tetrachloride; CCl4	56-23-5	76.7	90.0	153.8	X	X
Vinyl acetate; C4H6O2	108-05-4	72.2	83.0	86		X
Methyl ethyl ketone (2-butanone); C4H8O	78-93-3	79.6	77.5	72		X
Benzene; C6H6	71-43-2	80.1	76.0	78	X	X
Acetonitrile (cyanomethane); C2H3N	75-05-8	82	74.0	41.0		X
Ethylene dichloride (1,2-dichloroethane); C2H4Cl2	107-06-2	83.5	61.5	99	X	X
Triethylamine; C6H15N	121-44-8	89.5	54.0	101.2		
Methylhydrazine; CH6N2	60-34-4	87. 8	49.6	46.1		
Propylene dichloride (1,2-dichloropropane); C3H6Cl2	78-87-5	97.0	42.0	113	X	X
2,2,4-Trimethyl pentane C8H18	540-84-1	99.2	40.6	114		
1,4-Dioxane (1,4-Diethylene oxide); C4H8O2	123-91-1	101	37.0	88		
Bis(chloromethyl) ether; C2H4Cl2O	542-88-1	104	30.0	115		
Ethyl acrylate; C5H8O2	140-88-5	100	29.3	100		
Methyl methacrylate; C5H8O2	80-62-6	101	28.0	100.1		

TABLE 1. (continued)

Compound	CAS No.	BP (°C)	v.p. (mmgHg)[1]	MW[1]	TO-14A	CLP-SOW
Methyl methacrylate; C5H8O2	80-62-101	101	28.0	100.1		
1,3-Dichloropropene; C3H4Cl2 (cis)	542-75-6	112	27.8	111	X	X
Toluene; C7H8	108-88-3	111	22.0	92	X	X
Trichloroethylene; C2HCl3	79-01-6	87.0	20.0	131.4	X	X
1,1,2-Trichloroethane; C2H3Cl3	79-00-5	114	19.0	133.4	X	X
Tetrachloroethylene; C2Cl4	127-18-4	121	14.0	165.8	X	X
Epichlorohydrin (1-chloro-2,3-epoxy propane); C3H5ClO	106-89-8	117	12.0	92.5		
Ethylene dibromide (1,2-dibromoethane); C2H4Br2	106-93-4	132	11.0	187.9	X	X
N-Nitroso-N-methylurea; C2H5N3O2	684-93-5	124	10.0	103		
2-Nitropropane; C3H7NO2	79-46-9	120	10.0	89		
Chlorobenzene; C6H5Cl	108-90-7	132	8.8	112.6	X	X
Ethylbenzene; C8H10	100-41-4	136	7.0	106	X	X
Xylenes (isomer & mixtures); C8H10	1330-20-7	142	6.7	106.2	X	X
Styrene; C8H8	100-42-5	145	6.6	104	X	X
p-Xylene; C8H10	106-42-3	138	6.5	106.2	X	X
m-Xylene; C8H10	108-38-3	139	6.0	106.2	X	X
Methyl isobutyl ketone (hexone); C6H12O	108-10-1	117	6.0	100.2		
Bromoform (tribromomethane); CHBr3	75-25-2	149	5.6	252.8		
1,1,2,2-Tetrachloroethane; C2H2Cl4	79-34-5	146	5.0	167.9	X	X
o-Xylene; C8H10	95-47-6	144	5.0	106.2	X	X
Dimethylcarbamyl chloride; C3H6ClNO	79-44-7	166	4.9	107.6		
N-Nitrosodimethylamine; C2H6N2O	62-75-9	152	3.7	74		
Beta-Propiolactone; C3H4O2	57-57-8	Decomposes at 162	3.4	72		
Cumene (isopropylbenzene); C9H12	98-82-8	153	3.2	120		

TABLE 1. (continued)

Compound	CAS No.	BP (°C)	v.p. (mmHg)[1]	MW[1]	TO-14A	CLP-SOW
Cumene (isopropylbenzene); C9H12	98-82-8	153	3.2	120		
Acrylic acid; C3H4O2	79-10-7	141	3.2	72		
N,N-Dimethylformamide; C3H7NO	68-12-2	153	2.7	73		
1,3-Propane sultone; C3H6O3S	1120-71-4	180/30mm	2.0	122.1		
Acetophenone; C8H8O	98-86-2	202	1.0	120		
Dimethyl sulfate; C2H6O4S	77-78-1	188	1.0	126.1		
Benzyl chloride (a-chlorotoluene); C7H7Cl	100-44-7	179	1.0	126.6	X	X
1,2-Dibromo-3-chloropropane; C3H5Br2Cl	96-12-8	196	0.80	236.4		
Bis(2-Chloroethyl)ether; C4H8Cl2O	111-44-4	178	0.71	143		
Chloroacetic acid; C2H3ClO2	79-11-8	189	0.69	94.5		
Aniline (aminobenzene); C6H7N	62-53-3	184	0.67	93		
1,4-Dichlorobenzene (p-); C6H4Cl2	106-46-7	173	0.60	147	X	X
Ethyl carbamate (urethane); C3H7NO2	51-79-6	183	0.54	89		
Acrylamide; C3H5NO	79-06-1	125/25 mm	0.53	71		
N,N-Dimethylaniline; C8H11N	121-69-7	192	0.50	121		
Hexachloroethane; C2Cl6	67-72-1	Sublimes at 186	0.40	236.7		
Hexachlorobutadiene; C4Cl6	87-68-3	215	0.40	260.8	X	X
Isophorone; C9H14O	78-59-1	215	0.38	138.2		
N-Nitrosomorpholine; C4H8N2O2	59-89-2	225	0.32	116.1		
Styrene oxide; C8H8O	96-09-3	194	0.30	120.2		
Diethyl sulfate; C4H10O4S	64-67-5	208	0.29	154		
Cresylic acid (cresol isomer mixture);C7H8O	1319-77-3	202	0.26	108		
o-Cresol; C7H8O	95-48-7	191	0.24	108		
Catechol (o-hydroxyphenol); C6H6O2	120-80-9	240	0.22	110		
Phenol; C6H6O	108-95-2	182	0.20	94		

TABLE 1. (continued)

Compound	CAS No.	BP (°C)	v.p. (mmHg)[1]	MW[1]	TO-14A	CLP-SOW
Catechol (o-hydroxyphenol); C6H6O2	120-80-9	240	0.22	110		
Phenol; C6H6O	108-95-2	182	0.20	94		
1,2,4-Trichlorobenzene; C6H3Cl3	120-82-1	213	0.18	181.5	X	X
nitrobenzene C6H5NO2	98-95-3	211	0.15	123		

[1]Vapor pressure (v.p.), boiling point (BP) and molecularweight (MW) data from:
(a)D. L. Jones and J. bursey, "Simultaneous Control of PM-10 and Hazardous Air Pollutants II: Rationale for Selection of Hazardous Air Pollutants as Potential Particulate Matter," Report EPA-452/R-93/013, U. S. Environmental Protection Agency, Research Triangle Park, NC. October 1992;
(b)R. C. Weber, P. A. Parker, and M. Bowser. Vapor Pressure Distribution of Selected Organic Chemicals, Report EPA-600/2-81-021, U. S. Environmental Protection Agency, Cincinnati, OH, February 1981; and
(c)R. C. Weast, ed., "CRC Handbook of Chemistry and Physics," 59th edition, CRC Press, Boca Raton, 1979.

TABLE 2. CHARACTERISTIC MASSES (M/Z) USED FOR QUANTIFYING THE TITLE III CLEAN AIR ACT AMENDMENT COMPOUNDS

Compound	CAS No.	Primary Ion	Secondary Ion
Methyl chloride (chloromethane); CH3Cl	74-87-3	50	52
Carbonyl sulfide; COS	463-S8-1	60	62
Vinyl chloride (chloroethene); C2H3Cl	7S-01-4	62	64
Diazomethane; CH2N2	334-88-3	42	41
Formaldehyde; CH2O	50-00-0	29	30
1,3-Butadiene; C4H6	106-99-0	39	54
Methyl bromide (bromomethane); CH3Br	74-83-9	94	96
Phosgene; CCl2O	75-44-5	63	65
Vinyl bromide (bromoethene); C2H3Br	593-60-2	106	108
Ethylene oxide; C2H4O	75-21-8	29	44
Ethyl chloride (chloroethane); C2H5Cl	75-00-3	64	66
Acetaldehyde (ethanal); C2H4O	75-07-0	44	29, 43
Vinylidene chloride (1,1-dichloroethylene); C2H2Cl2	75-35-4	61	96
Propylene oxide; C3H6O	75-56-9	58	57
Methyl iodide (iodomethane); CH3I	74-88-4	142	127
Methylene chloride; CH2Cl2	75-09-2	49	84, 86
Methyl isocyanate; C2H3NO	624-83-9	57	56
Allyl chloride (3-chloropropene); C3H5Cl	107-05-1	76	41, 78
Carbon disulfide; CS2	75-15-0	76	44, 78
Methyl tert-butyl ether; C5H12O	1634-04-4	73	41, 53
Propionaldehyde; C2H5CHO	123-38-6	58	29, 57
Ethylidene dichloride (1,1-dichloroethane); C2H4Cl2	75-34-3	63	65, 27
Chloroprene (2-chloro-1,3-butadiene); C4H5Cl	126-99-8	88	53, 90
Chloromethyl methyl ether; C2H5ClO	107-30-2	45	29, 49
Acrolein (2-propenal); C3H4O	107-02-8	56	55
1,2-Epoxybutane (1,2-butylene oxide); C4H8O	106-88-7	42	41, 72
Chloroform; CHCl3	67-66-3	83	85, 47
Ethyleneimine (aziridine); C2H5N	151-56-4	42	43
1,1-Dimethylhydrazine; C2H8N2	57-14-7	60	45, 59
Hexane; C6H14	110-54-3	57	41, 43
1,2-Propyleneimine (2-methylazindine); C3H7N	75-55-8	56	57, 42
Acrylonitrile (2-propenenitrile); C3H3N	107-13-1	53	52
Methyl chloroform (1,1,1 trichloroethane); C2H3Cl3	71-55-6	97	99, 61
Methanol; CH4O	67-56-1	31	29
Carbon tetrachloride; CCl4	56-23-5	117	119
Vinyl acetate; C4H6O2	108-05-4	43	86
Methyl ethyl ketone (2-butanone); C4H8O	78-93-3	43	72

TABLE 2. (continued)

Compound	CAS No.	Primary Ion	Secondary Ion
Benzene; C6H6	71-43-2	78	77,50
Acetonitrile (cyanomethane); C2H3N	75-05-8	41	40
Ethylene dichloride (1,2-dichloroethane); C2H4Cl2	107-06-2	62	64, 27
Triethylamine; C6H15N	121-44-8	86	58, 101
Methylhydrazine; CH6N2	60-34-4	46	31, 45
Propylene dichloride (1,2-dichloropropane); C3H6Cl2	78-87-5	63	41, 62
2,2,4-Trimethyl pentane; C8H18	540-84-1	57	41, 56
1,4-Dioxane (1,4 Diethylene oxide); C4H8O2	123-91-1	88	58
Bis(chloromethyl) ether; C2H4Cl2O	542-88-1	79	49, 81
Ethyl acrylate; C5H8O2	140-88-5	55	73
Methyl methacrylate; C5H8O2	80-62-6	41	69, 100
1,3-Dichloropropene; C3H4Cl2 (cis)	542-75-6	75	39, 77
Toluene; C7H8	108-88-3	91	92
Trichloethylene; C2HCl3	79-01-6	130	132, 95
1,1,2-Trichloroethane; C2H3Cl3	79-00-5	97	83, 61
Tetrachloroethylene; C2Cl4	127-18-4	166	164, 131
Epichlorohydrin (l-chloro-2,3-epoxy propane); C3H5ClO	106-89-8	57	49, 62
Ethylene dibromide (1,2-dibromoethane); C2H4Br2	106-93-4	107	109
N-Nitrso-N-methylurea; C2H5N3O2	684-93-5	60	44, 103
2-Nitropropane; C3H7NO2	79-46-9	43	41
Chlorobenzene; C6H5Cl	108-90-7	112	77, 114
Ethylbenzene; C8H10	100-41-4	91	106
Xylenes (isomer & mixtures); C8H10	1330-20-7	91	106
Styrene; C8H8	100-42-5	104	78, 103
p-Xylene; C8H10	106-42-3	91	106
m-Xylene; C8H10	108-38-3	91	106
Methyl isobutyl ketone (hexone); C6H12O	108-10-1	43	58, 100
Bromoform (tribromomethane); CHBr3	75-25-2	173	171, 175
1,1,2,2-Tetrachloroethane; C2H2Cl4	79-34-5	83	85
o-Xylene; C8H10	95-47-6	91	106
Dimethylcarbamyl chloride; C3H6ClNO	79-44-7	72	107
N-Nitrosodimethylamine; C2H6N2O	62-75-9	74	42
Beta-Propiolactone; C3H4O2	57-57-8	42	43
Cumene (isopropylbenzene); C9H12	98-82-8	105	120
Acrylic acid; C3H4O2	79-10-7	72	45, 55
N,N-Dimethylformamide; C3H7NO	68-12-2	73	42, 44
1,3-Propane sultone; C3H6O3S	1120-71-4	58	65, 122

TABLE 2. (continued)

Compound	CAS No.	Primary Ion	Secondary Ion
Acetophenone; C8H8O	98-86-2	105	77,120
Dimethyl sulfate; C2H6O4S	77-78-1	95	66,96
Benzyl chloride (a-chlorotoluene); C7H7Cl	100-44-7	91	126
1,2-Dibromo-3-chloropropane; C3H5Br2Cl	96-12-8	57	155, 157
Bis(2-Chloroethyl)ether; C4H8Cl2O	111-44-4	93	63, 95
Chloroacetic acid; C2H3ClO2	79-11-8	50	45, 60
Aniline (aminobenzene); C6H7N	62-53-3	93	66
1,4-Dichlorobenzene (p-); C6H4Cl2	106-46-7	146	148, 111
Ethyl carbamate (urethane); C3H7NO2	51-79-6	31	44, 62
Acrylamide; C3H5NO	79-06-1	44	55, 71
N,N-Dimethylaniline; C8H11N	121-69-7	120	77, 121
Hexachloroethane; C2Cl6	67-72-1	201	199, 203
Hexachlorobutadiene; C4Cl6	87-68-3	225	227, 223
Isophorone; C9H14O	78-59-1	82	138
N-Nitrosomorpholine; C4H8N2O2	59-89-2	56	86, 116
Styrene oxide; C8H8O	96-09-3	91	120
Diethyl sulfate; C4H10O4S	64-67-5	45	59, 139
Cresylic acid (cresol isomer mixture); C7H8O	1319-77-3		
o-Cresol; C7H8O	95-48-7	108	107
Catechol (o-hydroxyphenol); C6H6O2	120-80-9	110	64
Phenol; C6H6O	108-95-2	94	66
1,2,4-Trichlorobenzene; C6H3Cl3	120-82-1	180	182, 184
Nitrobenzene; C6H5NO2	98-95-3	77	51, 123

TABLE 3. REQUIRED BFB KEY IONS AND ION ABUNDANCE CRITERIA

Mass	Ion Abundance Criteria[1]
50	8.0 to 40.0 Percent of m/e 95
75	30.0 to 66.0 Percent of m/e 95
95	Base Peak, 100 Percent Relative Abundance
96	5.0 to 9.0 Percent of m/e 95 (See note)
173	Less than 2.0 Percent of m/e 174
174	50.0 to 120.0 Percent of m/e 95
175	4.0 to 9.0 Percent of m/e 174
176	93.0 to 101.0 Percent of m/e 174
177	5.0 to 9.0 Percent of m/e 176

[1]All ion abundances must be normalized to m/z 95, the nominal base peak, even though the ion abundance of m/z 174 may be up to 120 percent that of m/z 95.

TABLE 4. METHOD DETECTION LIMITS (MDL)[1]

TO-14A List	Lab #1, SCAN	Lab #2, SIM
Benzene	0.34	0.29
Benzyl Chloride	--	--
Carbon tetrachloride	0.42	0.15
Chlorobenzene	0.34	0.02
Chloroform	0.25	0.07
1,3-Dichlorobenzene	0.36	0.07
1,2-Dibromoethane	--	0.05
1,4-Dichlorobenzene	0.70	0.12
1,2-Dichlorobenzene	0.44	--
1,1-Dichloroethane	0.27	0.05
1,2-Dichloroethane	0.24	--
1,1-Dichloroethene	--	0.22
cis-1,2-Dichloroethene	--	0.06
Methylene chloride	1.38	0.84
1,2-Dichloropropane	0.21	--
cis-1,3-Dichloropropene	0.36	--
trans-1,3-Dichloropropene	0.22	--
Ethylbenzene	0.27	0.05
Chloroethane	0.19	--
Trichlorofluoromethane	--	--
1,1,2-Trichloro-1,2,2-trifluoroethane		--
1,2-Dichloro-1,1,2,2-tetrafluoroethane	--	--
Dichlorodifluoromethane	--	--
Hexachlorobutadiene	--	--
Bromomethane	0.53	--
Chloromethane	0.40	--
Styrene	1.64	0.06
1,1,2,2-Tetrachloroethane	0.28	0.09
Tetrachloroethene	0.75	0.10
Toluene	0.99	0.20
1,2,4-Trichlorobenzene	--	--
1,1,1-Trichloroethane	0.62	0.21
1,1,2-Trichloroethane	0.50	--
Trichloroethene	0.45	0.07
1,2,4-Trimethylbenzene	--	--
1,3,5-Trimethylbenzene	--	--
Vinyl Chloride	0.33	0.48
m,p-Xylene	0.76	0.08
o-Xylene	0.57	0.28

[1]Method Detection Limits (MDLs) are defined as the product of the standard deviation of seven replicate analyses and the student's "t" test value for 99% confidence. For Lab #2, the MDLs represent an average over four studies. MDLs are for MS/SCAN for Lab #1 and for MS/SIM for Lab #2.

TABLE 5. SUMMARY OF EPA DATA ON REPLICATE PRECISION (RP) FROM EPA NETWORK OPERATIONS[1]

Monitoring Compound Identification	EPA's Urban Air Toxics Monitoring Program (UATMP)			EPA's Toxics Air Monitoring Stations (TAMS)		
	%RP	#	ppbv	%RP	#	ppbv
Dichlorodifluoromethane	--		--	13.9	47	0.9
Methylene chloride	16.3	07	4.3	19.4	47	0.6
1,2-Dichloroethane	36.2	31	1.6	--	--	--
1,1,1-Trichloroethane	14.1	44	1.0	10.6	47	2.0
Benzene	12.3	56	1.6	4.4	47	1.5
Trichloroethene	12.8	08	1.3	--	--	--
Toluene	14.7	76	3.1	3.4	47	3.1
Tetrachloroethene	36.2	12	0.8	--	--	--
Chlorobenzene	20.3	21	0.9	--	--	--
Ethylbenzene	14.6	32	0.7	5.4	47	0.5
m-Xylene	14.7	75	4.0	5.3	47	1.5
Styrene	22.8	59[2]	1.1	8.7	47	0.2[2]
o-Xylene	--		--	6.0	47	0.5
p-Xylene	--					
1,3-Dichlorobenzene	49.1	06	0.6	--	--	--
1,4-Dichlorobenzene	14.7	14	6.5	--	--	--

[1]Denotes the number of replicate or duplicate analysis used to generate the statistic. The replicate precision is defined as the mean ratio of absolute difference to the average value.
[2]Styrene and o-xylene coelute from the GC column used in UATMP. For the TAMS entries, both values were below detection limits for 18 of 47 replicates and were not included in the calculation.

TABLE 6. AUDIT ACCURACY (AA) VALUES[1] FOR SELECTED COMPENDIUM METHOD TO-14A COMPOUNDS

Selected Compounds From TO-14A List	FY-88 TAMS AA(%), N=30	FY-88 UATMP AA(%), N=3
Vinyl chloride	4.6	17.9
Bromomethane	--	6.4
Trichlorofluoromethane	6.4	--
Methylene chloride	8.6	31.4
Chloroform	--	4.2
1,2-Dichloroethane	6.8	11.4
1,1,1-Trichloroethane	18.6	11.3
Benzene	10.3	10.1
Carbon tetrachloride	12.4	9.4
1,2-Dichloropropane	--	6.2
Trichloroethene	8.8	5.2
Toluene	8.3	12.5
Tetrachloroethene	6.2	--
Chlorobenzene	10.5	11.7
Ethylbenzene	12.4	12.4
o-Xylene	16.2	21.2

[1]Audit accuracy is defined as the relative difference between the audit measurement result and its nominal value divided by the nominal value. N denotes the number of audits averaged to obtain the audit accuracy value. Information is not available for other TO-14A compounds because they were not present in the audit materials.

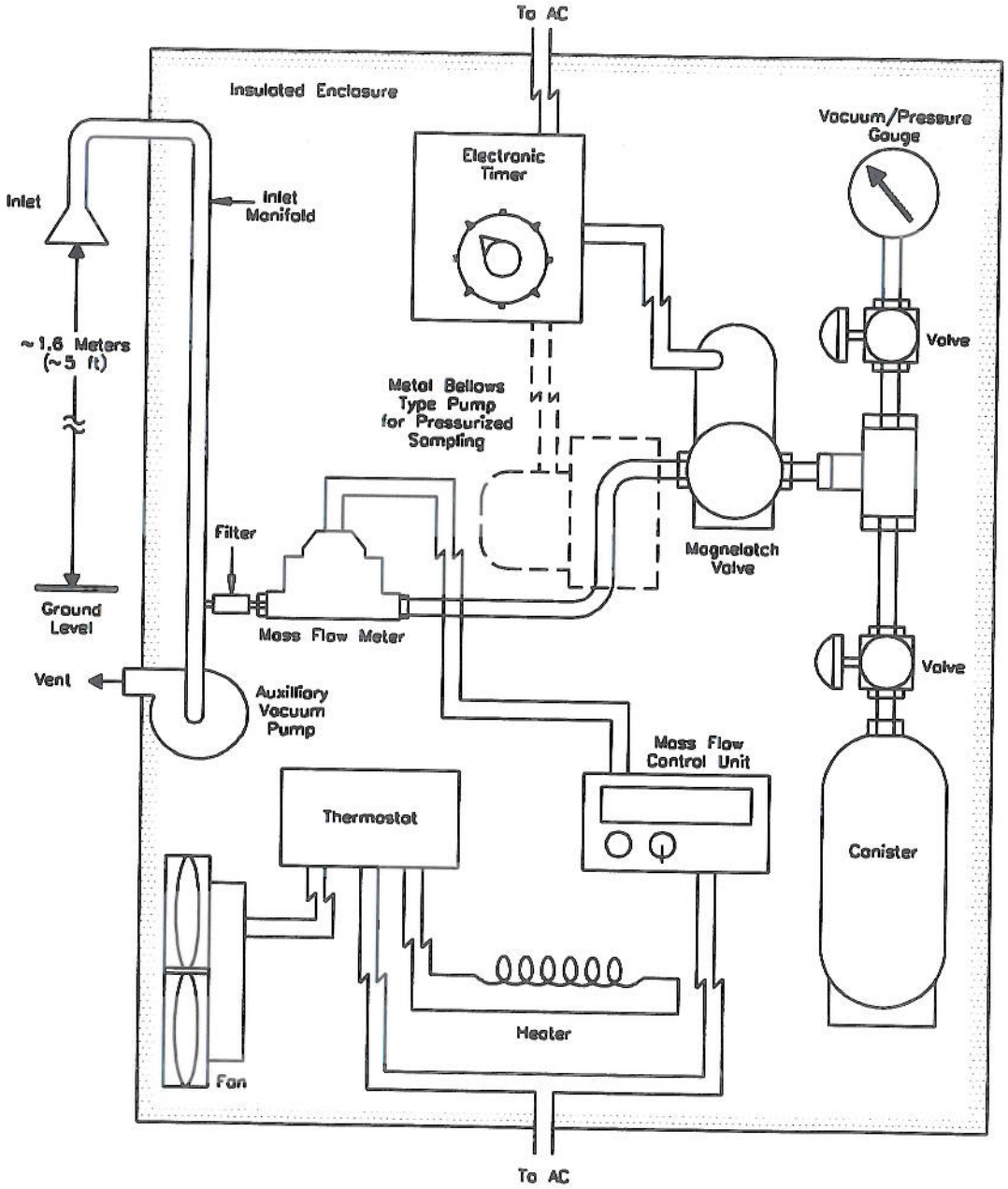

Figure 1. Sampler configuration for subatmospheric pressure or pressurized canister sampling.

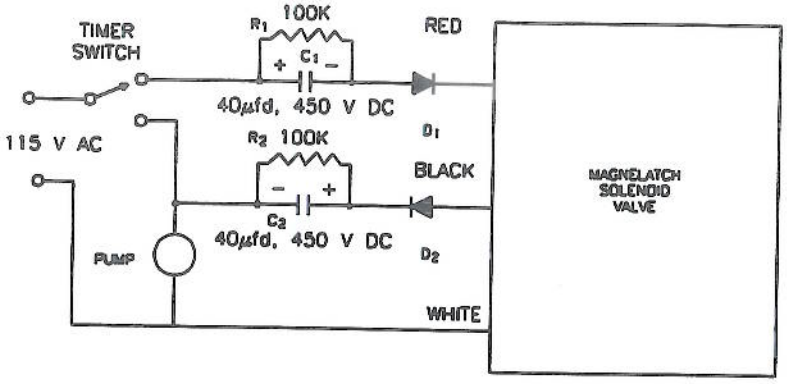

COMPONENTS

Capacitor C_1 and C_2 – 40 uf, 450 VDC (Sprague Atom TVA 1712 or equivalent)
Resistor R_1 and R_2 – 0.5 watt, 5% tolerance
Diode D_1 and D_2 – 1000 PRV, 2.5 A (RCA, SK 3081 or equivalent)

(a). Simple Circuit for Operating Magnelatch Valve

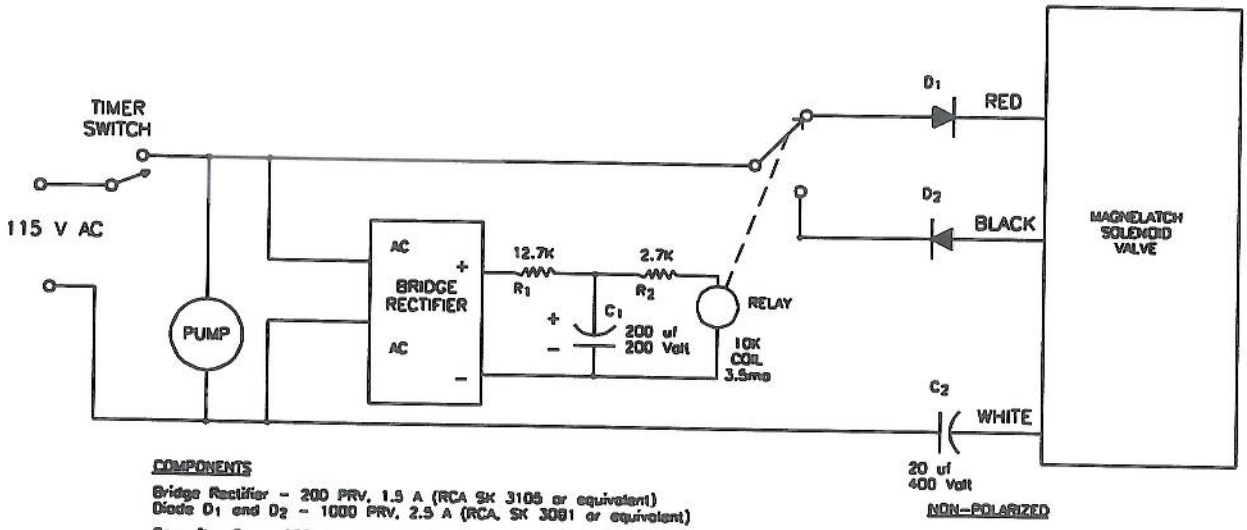

COMPONENTS

Bridge Rectifier – 200 PRV, 1.5 A (RCA SK 3105 or equivalent)
Diode D_1 and D_2 – 1000 PRV, 2.5 A (RCA, SK 3081 or equivalent)
Capacitor C_1 – 200 uf, 250 VDC (Sprague Atom TVA 1528 or equivalent)
Capacitor C_2 – 20 uf, 400 VDC Non-Polarized (Sprague Atom TVAN 1852 or equivalent)
Relay – 10,000 ohm coil, 3.5 ma (AMF Potter and Brumfield, KCP 5, or equivalent)
Resistor R_1 and R_2 – 0.5 watt, 5% tolerance

(b). Improved Circuit Designed to Handle Power Interruptions

Figure 2. Electrical pulse circuits for driving Skinner magnelatch solenoid valve with mechanical timer.

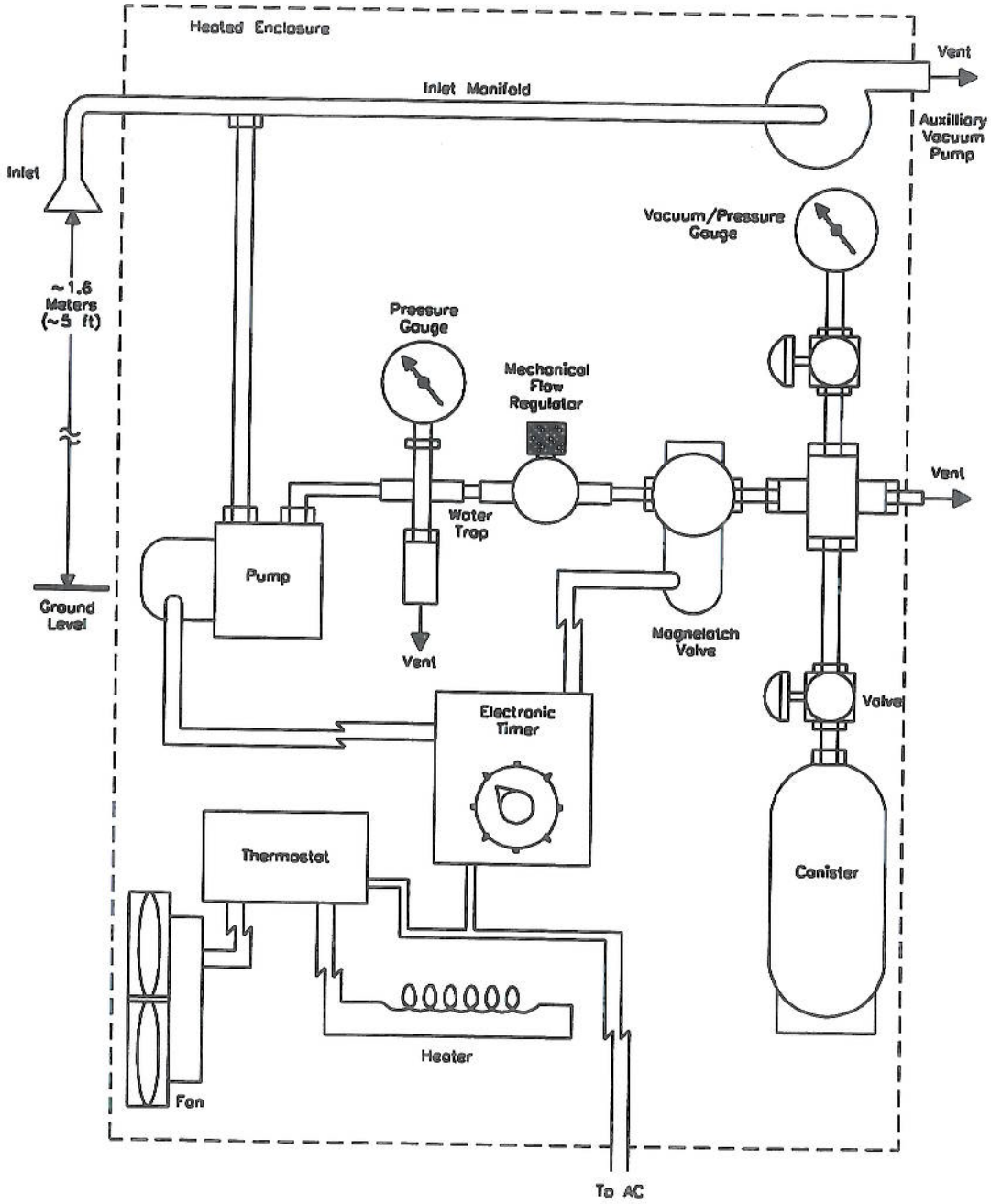

Figure 3. Alternative sampler configuration for pressurized canister sampling.

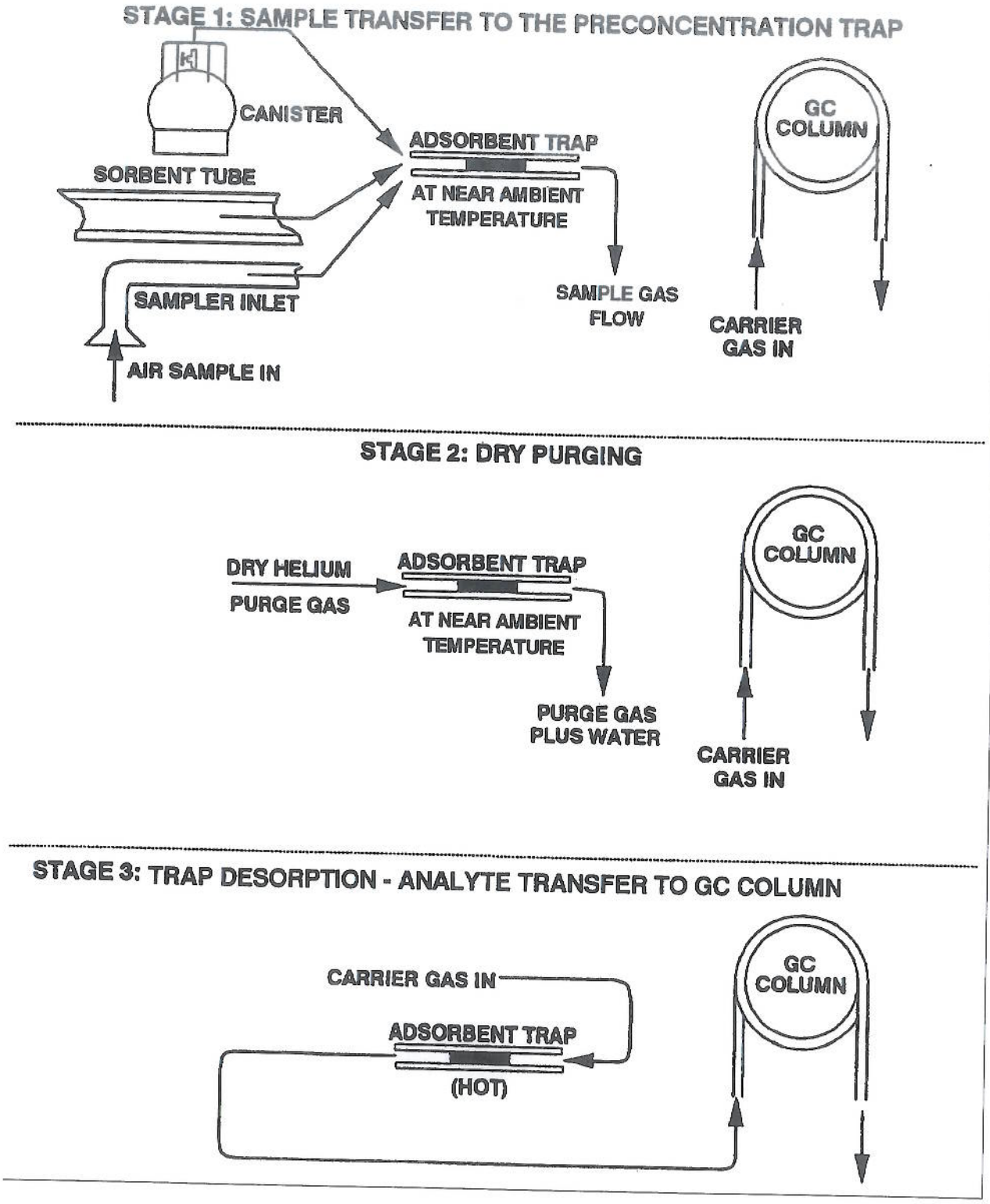

Figure 4. Illustration of three stages of dry purging of adsorbent trap.

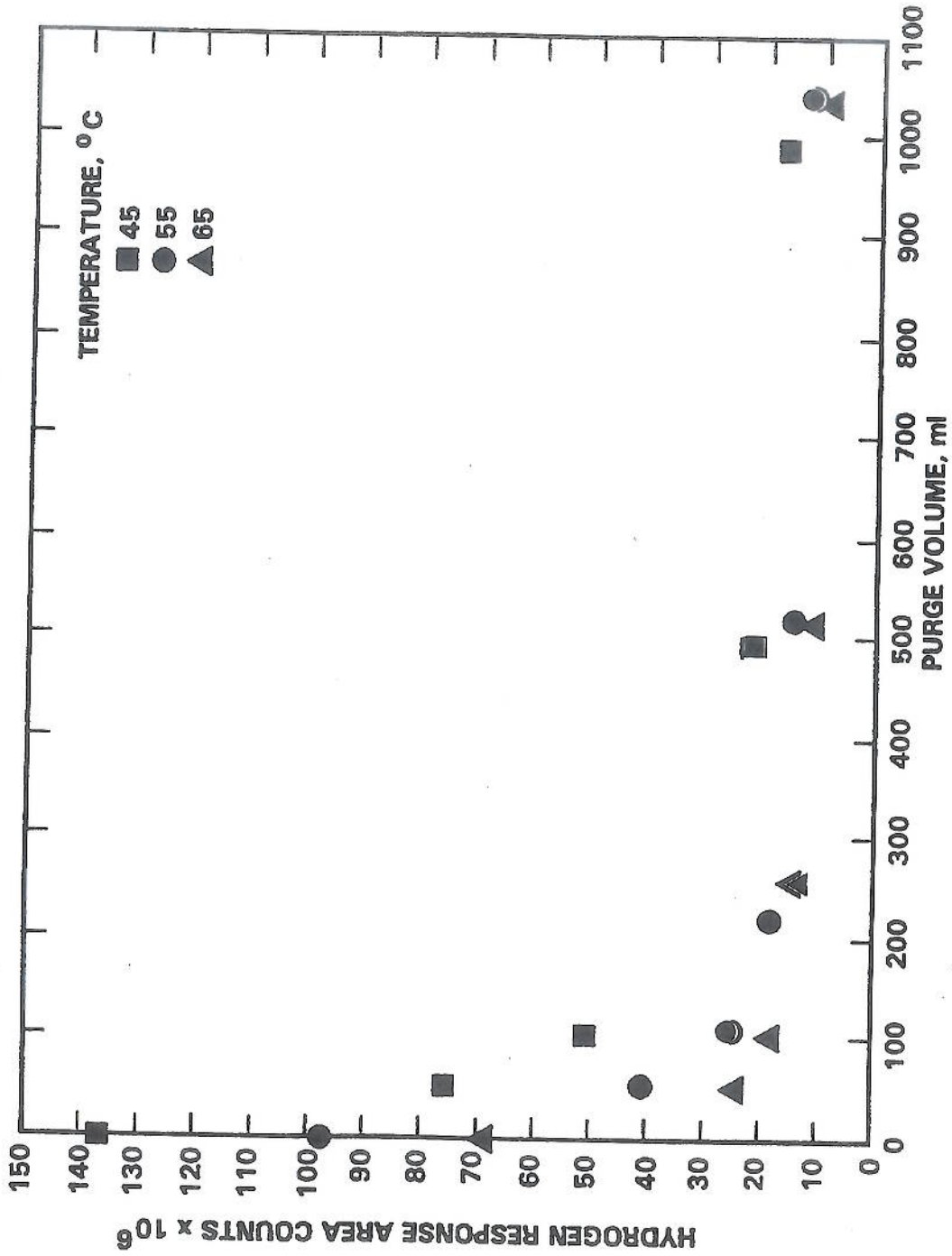

Figure 5. Residual water vapor on VOC concentrator vs. dry He purge volume.

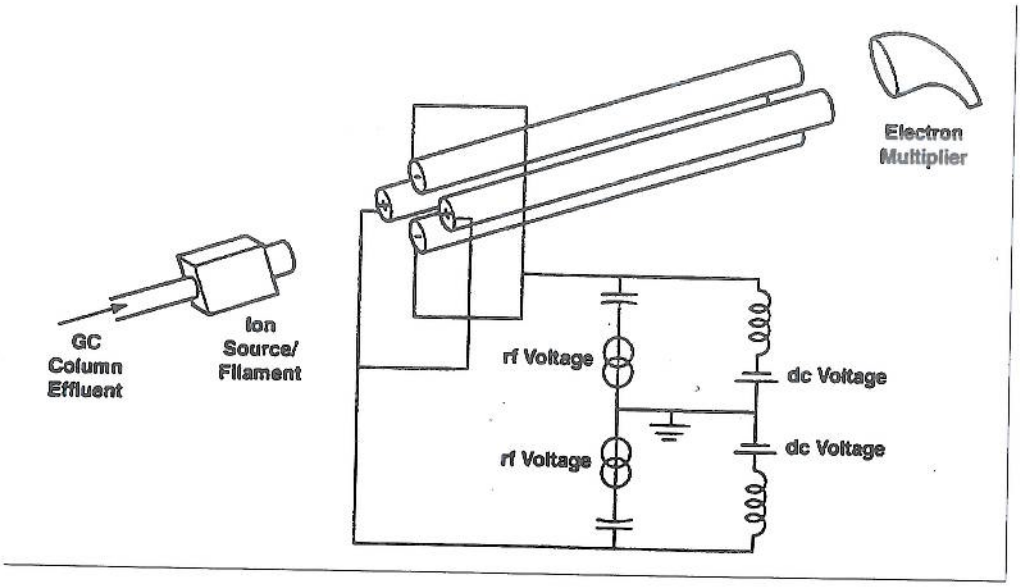

Figure 6. Simplified diagram of a quadrupole mass spectrometer.

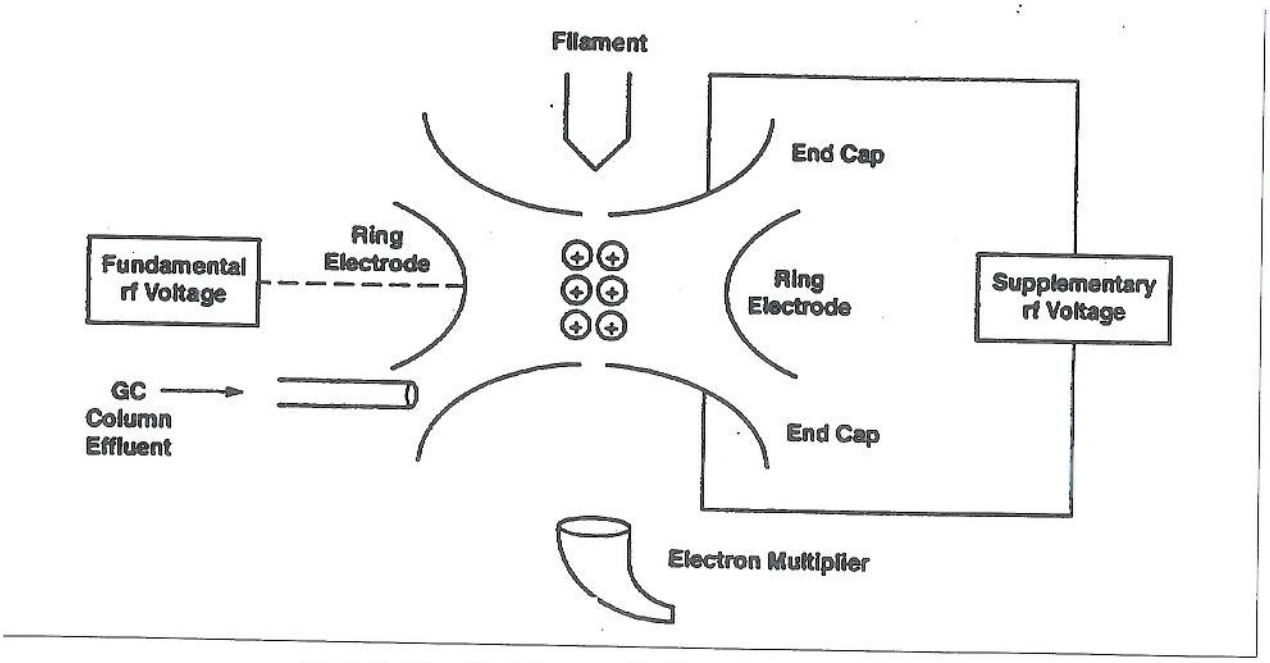

Figure 7. Simplified diagram of an ion trap mass spectrometer.

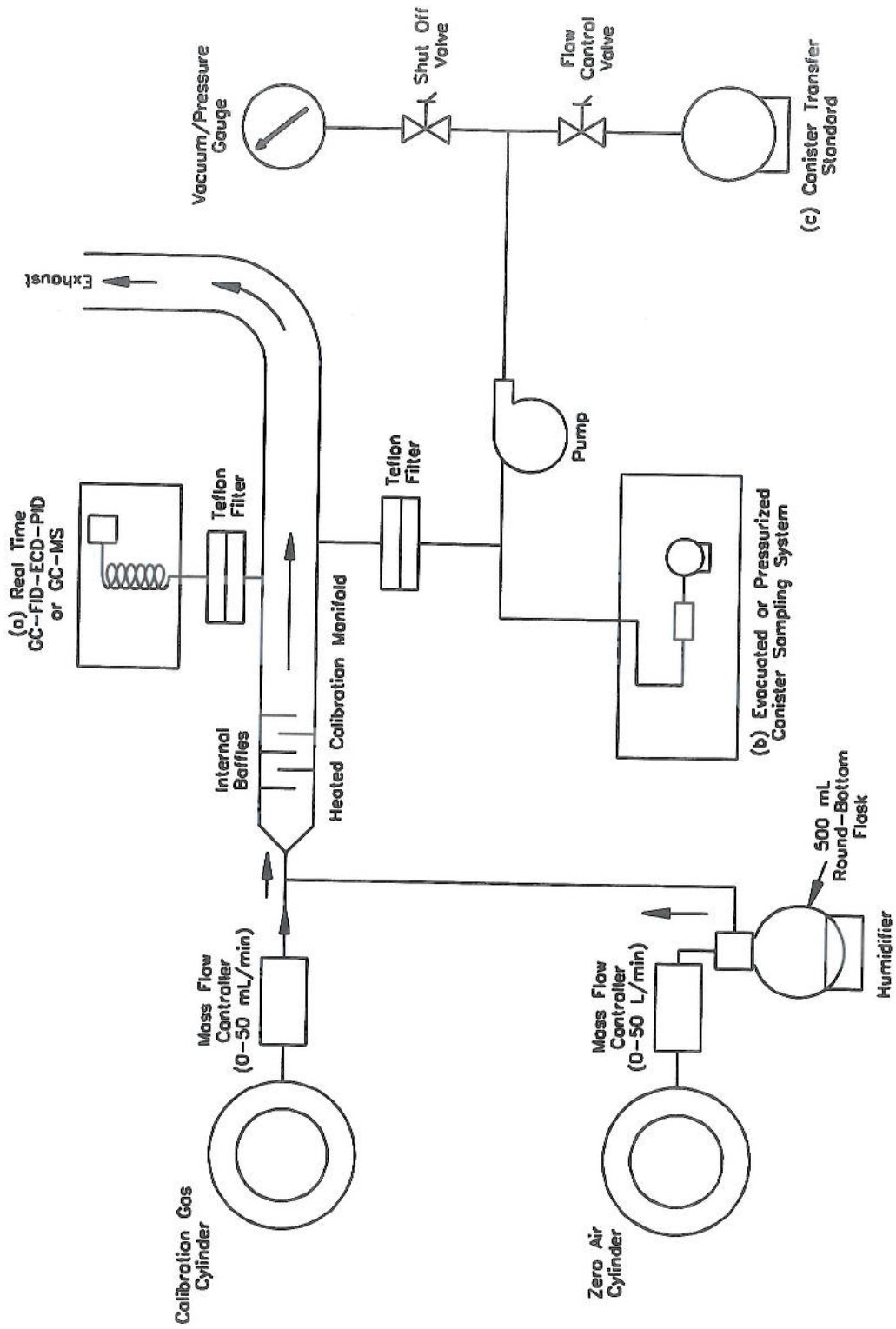

Figure 8. Schematic diagram of calibration system and manifold for (a) analytical system calibration, (b) testing canister sampling system and (c) preparing canister transfer standards.

COMPENDIUM METHOD TO-15
CANISTER SAMPLING FIELD TEST DATA SHEET

A. GENERAL INFORMATION

SITE LOCATION: _____
SITE ADDRESS: _____
_____
SAMPLING DATE: _____

SHIPPING DATE: _____
CANISTER SERIAL NO.: _____
SAMPLER ID: _____
OPERATOR: _____
CANISTER LEAK
CHECK DATE: _____

B. SAMPLING INFORMATION

TEMPERATURE

	INTERIOR	AMBIENT	MAXIMUM	MINIMUM
START				
STOP				

PRESSURE

CANISTER PRESSURE	

SAMPLING TIMES

	LOCAL TIME	ELAPSED TIME METER READING
START		
STOP		

FLOW RATES

MANIFOLD FLOW RATE	CANISTER FLOW RATE	FLOW CONTROLLER READOUT

SAMPLING SYSTEM CERTIFICATION DATE: _____
QUARTERLY RECERTIFICATION DATE: _____

C. LABORATORY INFORMATION

DATA RECEIVED: _____
RECEIVED BY: _____
INITIAL PRESSURE: _____
FINAL PRESSURE: _____
DILUTION FACTOR: _____
ANALYSIS
GC-FID-ECD DATE: _____
GC-MSD-SCAN DATE: _____
GC-MSD-SIM DATE: _____
RESULTS*: _____
_____
GC-FID-ECD: _____
GC-MSD-SCAN: _____
GC-MSD-SIM: _____

_____
SIGNATURE/TITLE

Figure 9. Canister sampling field test data sheet (FTDS).

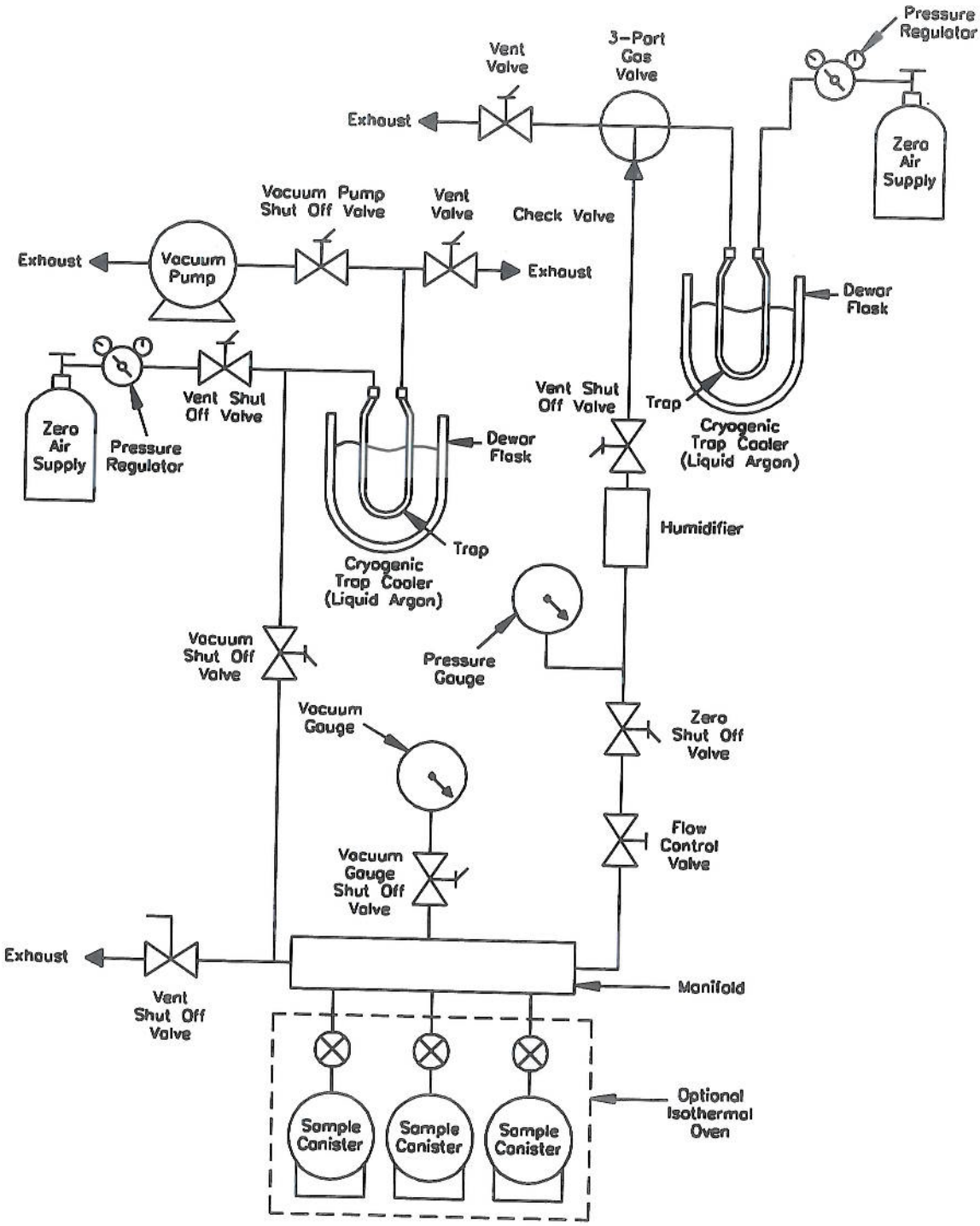

Figure 10. Canister cleaning system.

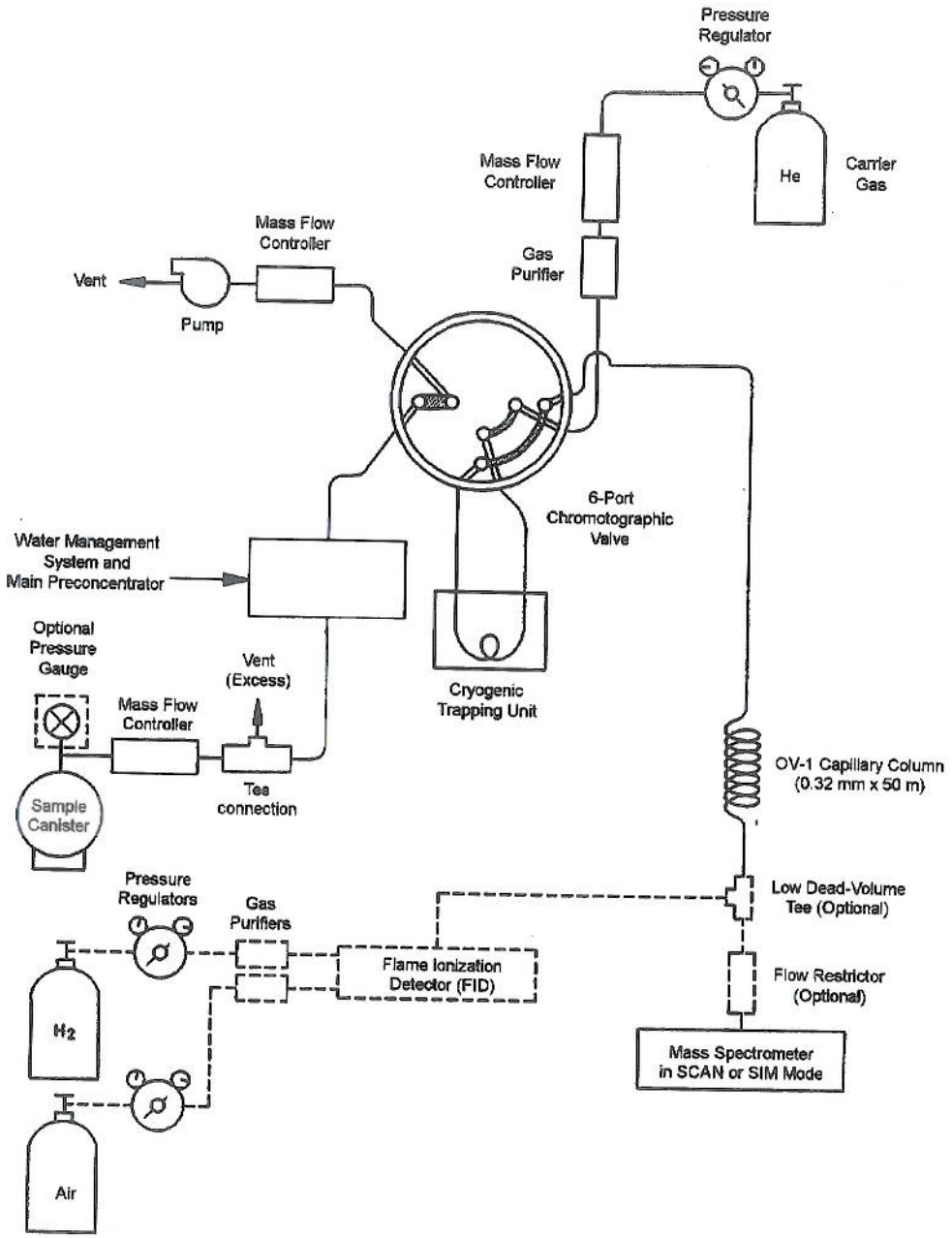

Figure 11. Canister analysis utilizing GC/MS/SCAN/SIM analytical system with optional flame ionization detector with 6-port chromatographic valve in the sample desorption mode.
[Alternative analytical system illustrated in Figure 16.]

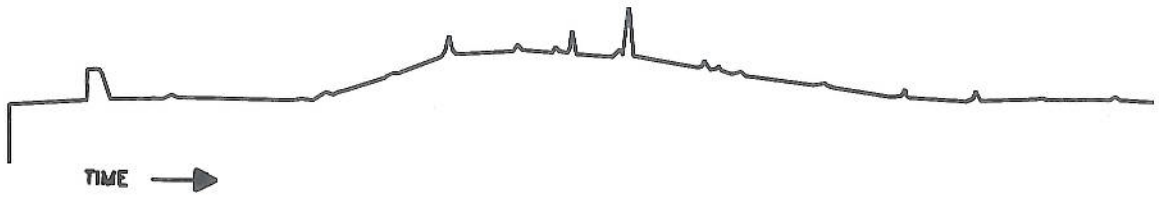

(a). Certified Sampler

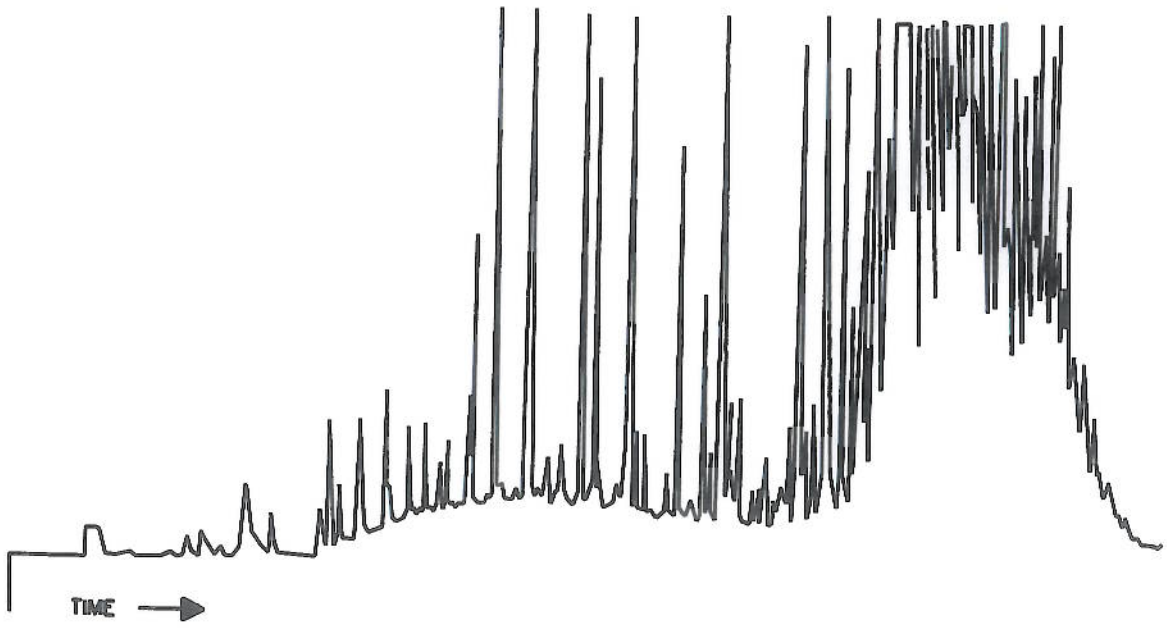

(b). Contaminated Sampler

Figure 12. Example of humid zero air test results for a clean sample canister (a) and a contaminated sample canister (b).

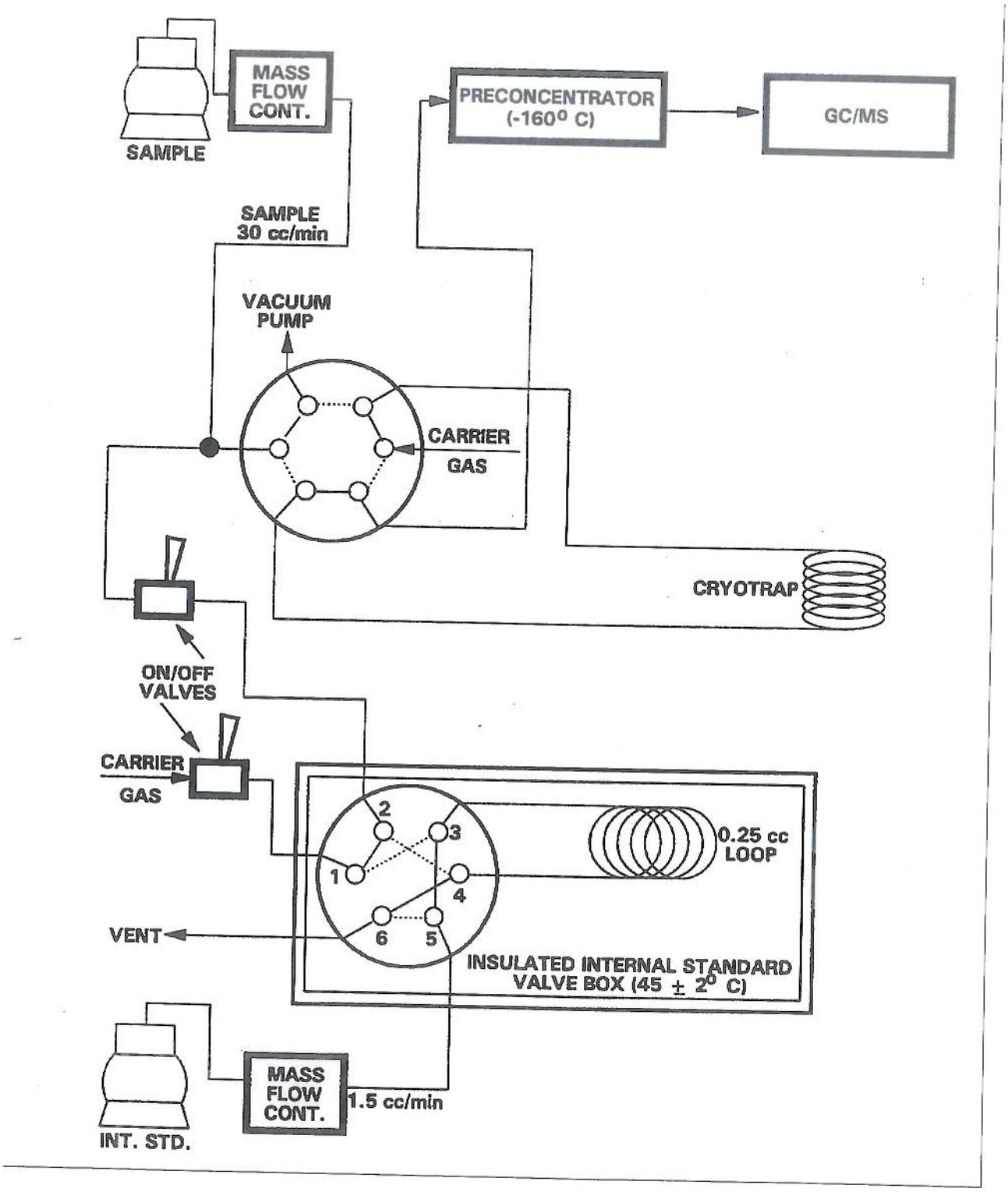

Figure 13. Diagram of design for internal standard addition.

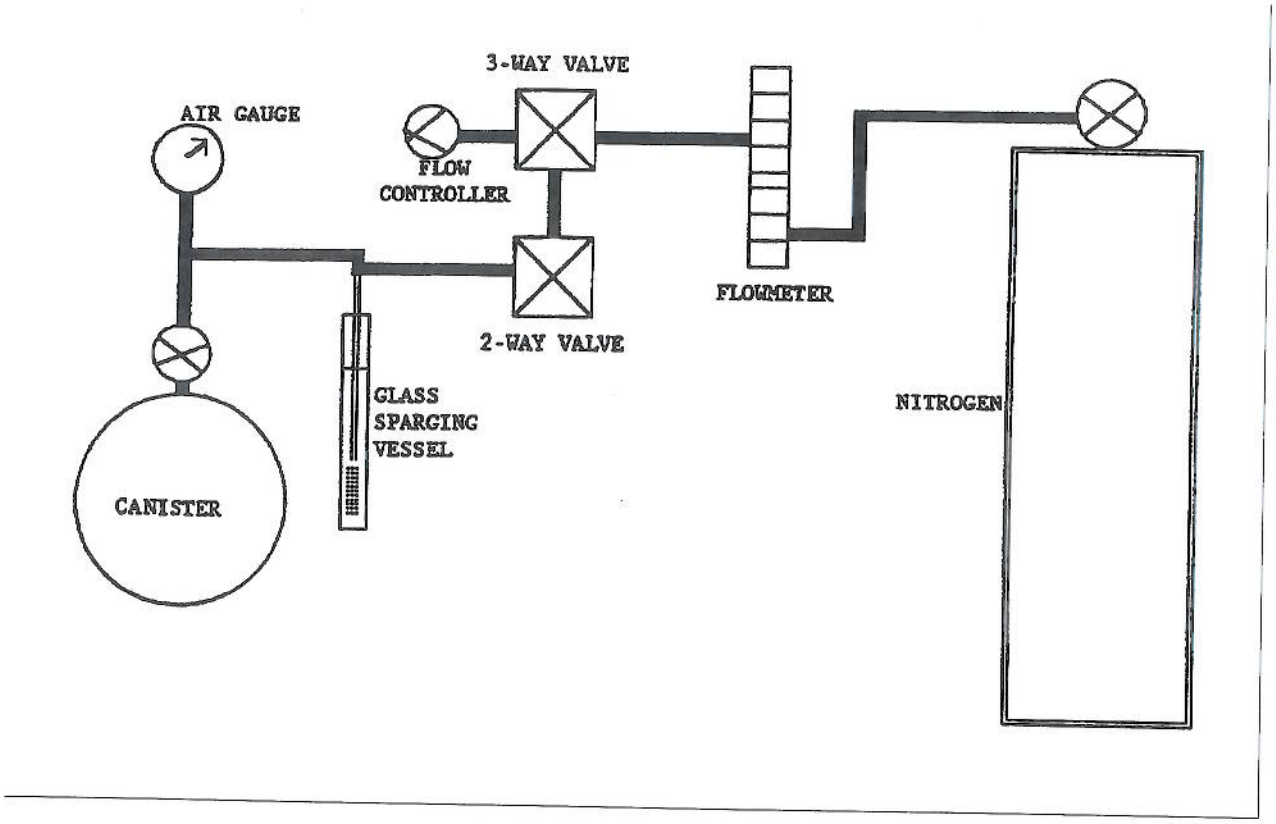

Figure 14. Water method of standard preparation in canisters.

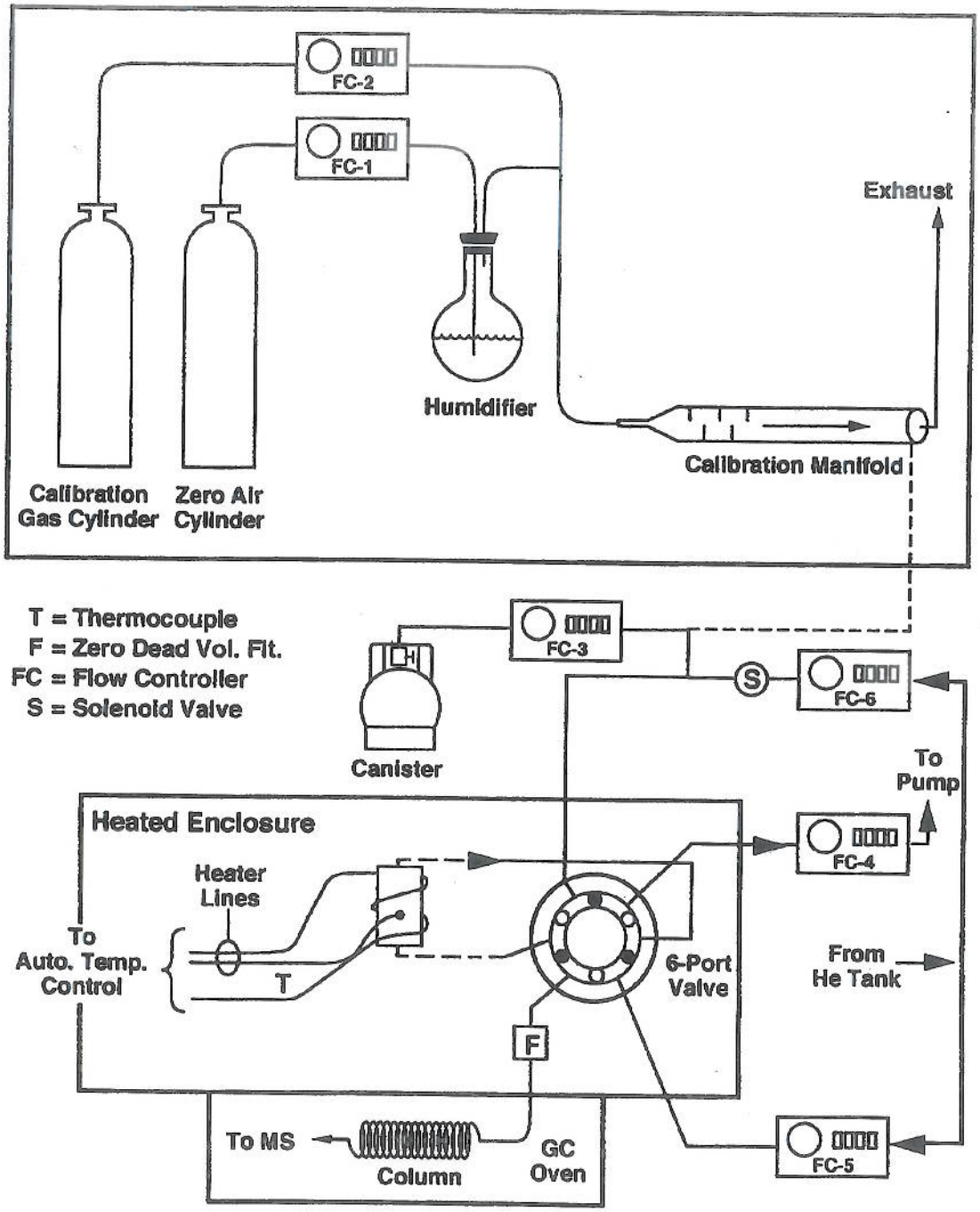

Figure 15. Diagram of the GC/MS analytical system.

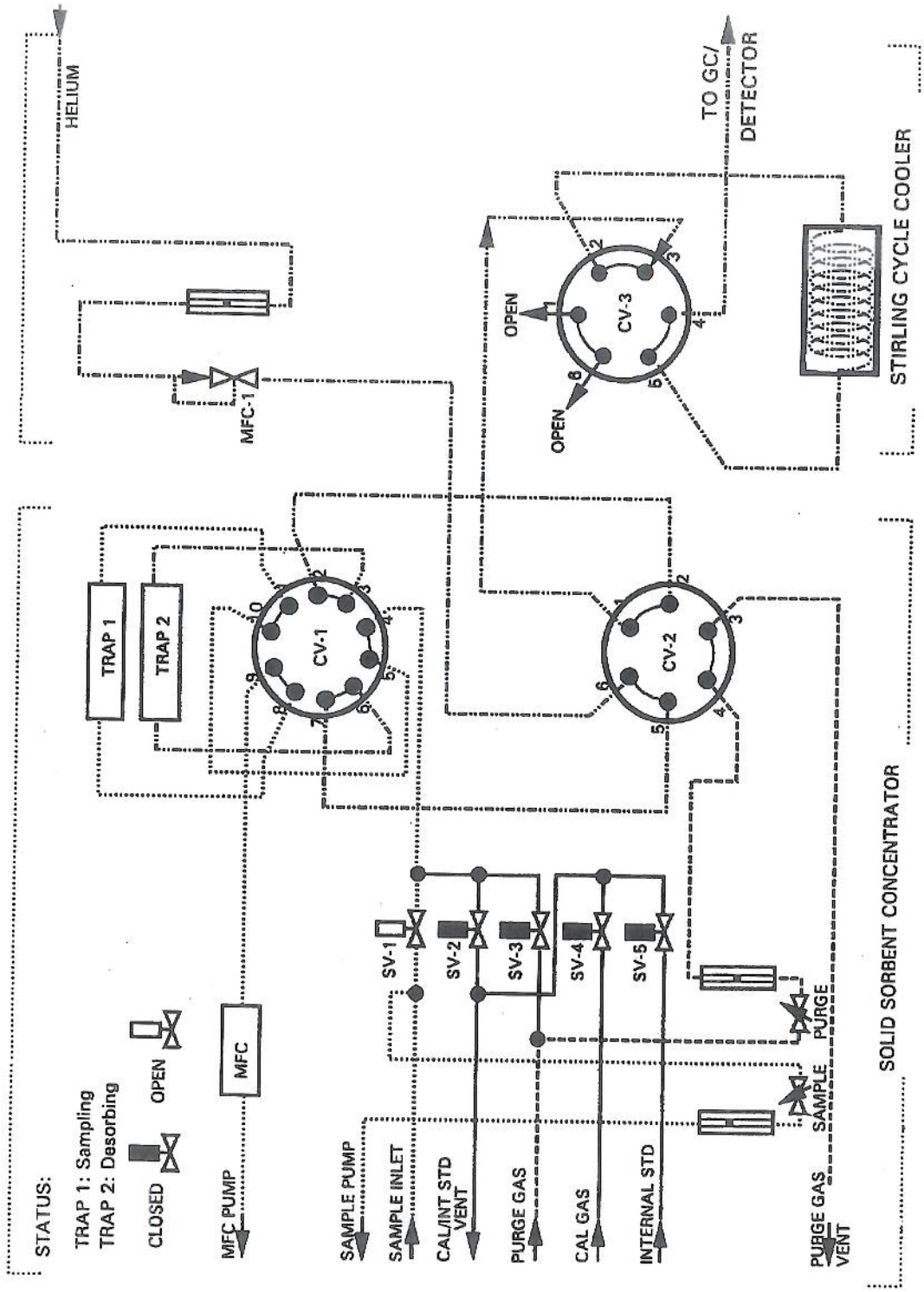

Figure 16. Sample flow diagram of a commercially available concentrator showing the combination of multisorbent tube and cooler (Trap 1 sampling; Trap 2 desorbing).