BENCH MARK NO. 515
LOCATED NORTH SIDE OF ROAD
NEAR REFINERY DOCK APPROX.
1,000 FEET SOUTH-EAST OF
PROJECT AREA. TOP OF CONC.
MONUMENT ELEVATION 11.62 FT.

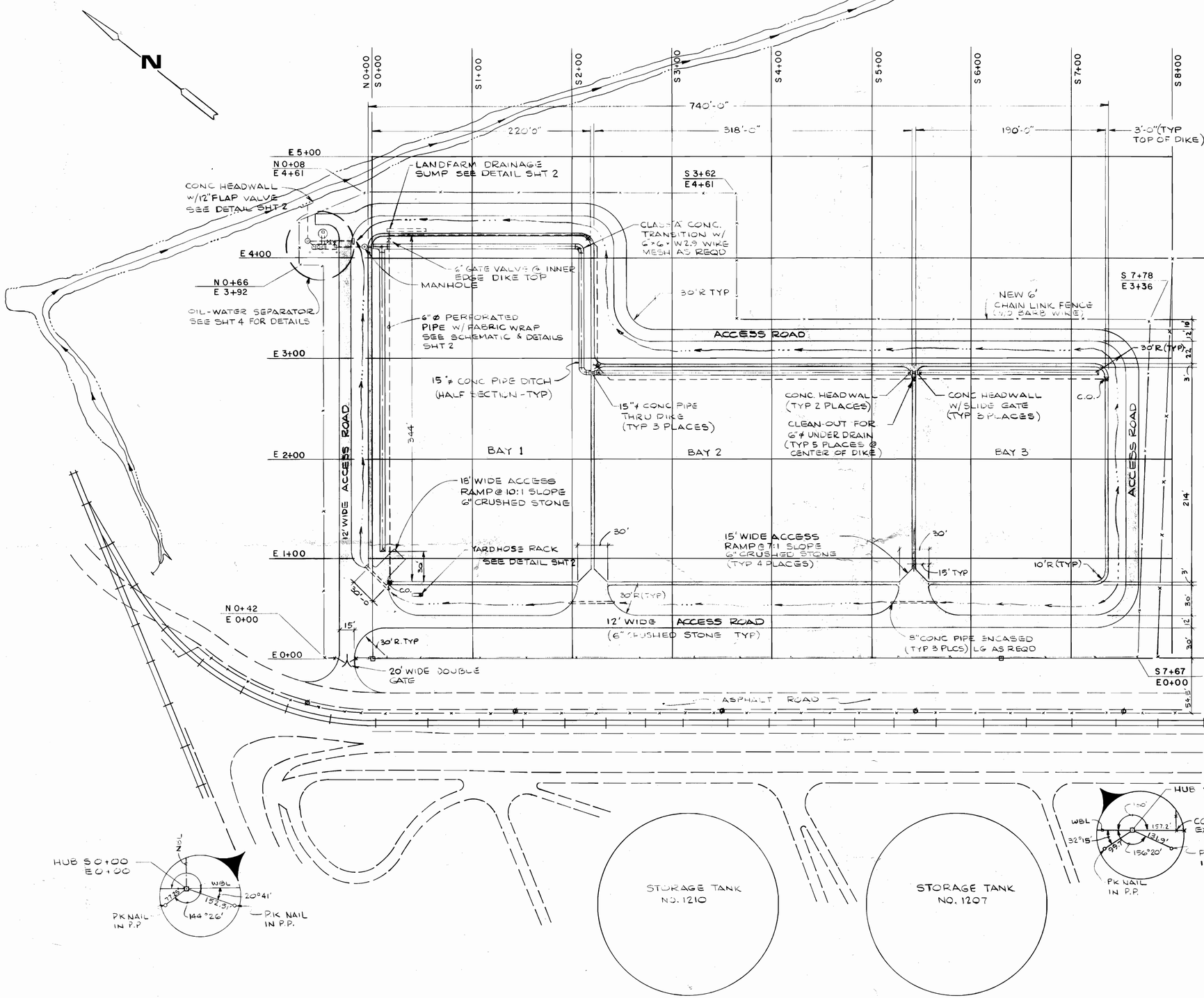


SITE PLAN
SCALE 1"= 50'-0"

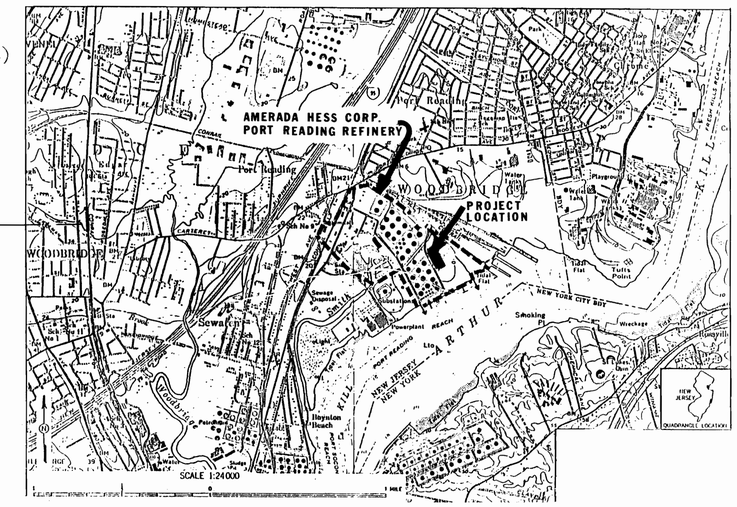


LOCATION MAP

## LEGEND

- (12) EXISTING CONTOURS
- [12] PROPOSED CONTOURS
- EXISTING ROADWAY
- FENCE LINE
- RAILROAD
- Ø POWER POLE (P.P.)
- CLEAN-OUT (C.O.)
- VALVE & BOX
- SURVEY HUB
- DRAINAGE DITCH

## INDEX OF DRAWINGS

1. SITE PLAN
2. GRADING PLAN & DETAILS
3. LANDFARM SECTIONS & DETAILS
4. MISCELLANEOUS DETAILS

THE AWARE CORPORATION
NASHVILLE, TENNESSEE
HOUSTON, TEXAS

AMERADA HESS CORPORATION
PORT READING REFINERY

NO. 1 LANDFARM

SITE PLAN

| | | | |
|---|---|---|---|
| DESIGNED: E.T.W. | CHECKED: | CLIENT APPR: | |
| DATE: JAN 1985 | DATE: | DATE: | |
| DRAWN: L.I.H. | APPROVED: | ISS FOR CONST. | |
| DATE: JAN 1985 | DATE: | DATE: | |
| SCALE NOTED / DATE PRINTED JAN 1985 | JOB NUMBER 6217 | DWG. NO. 1 OF 4 | |

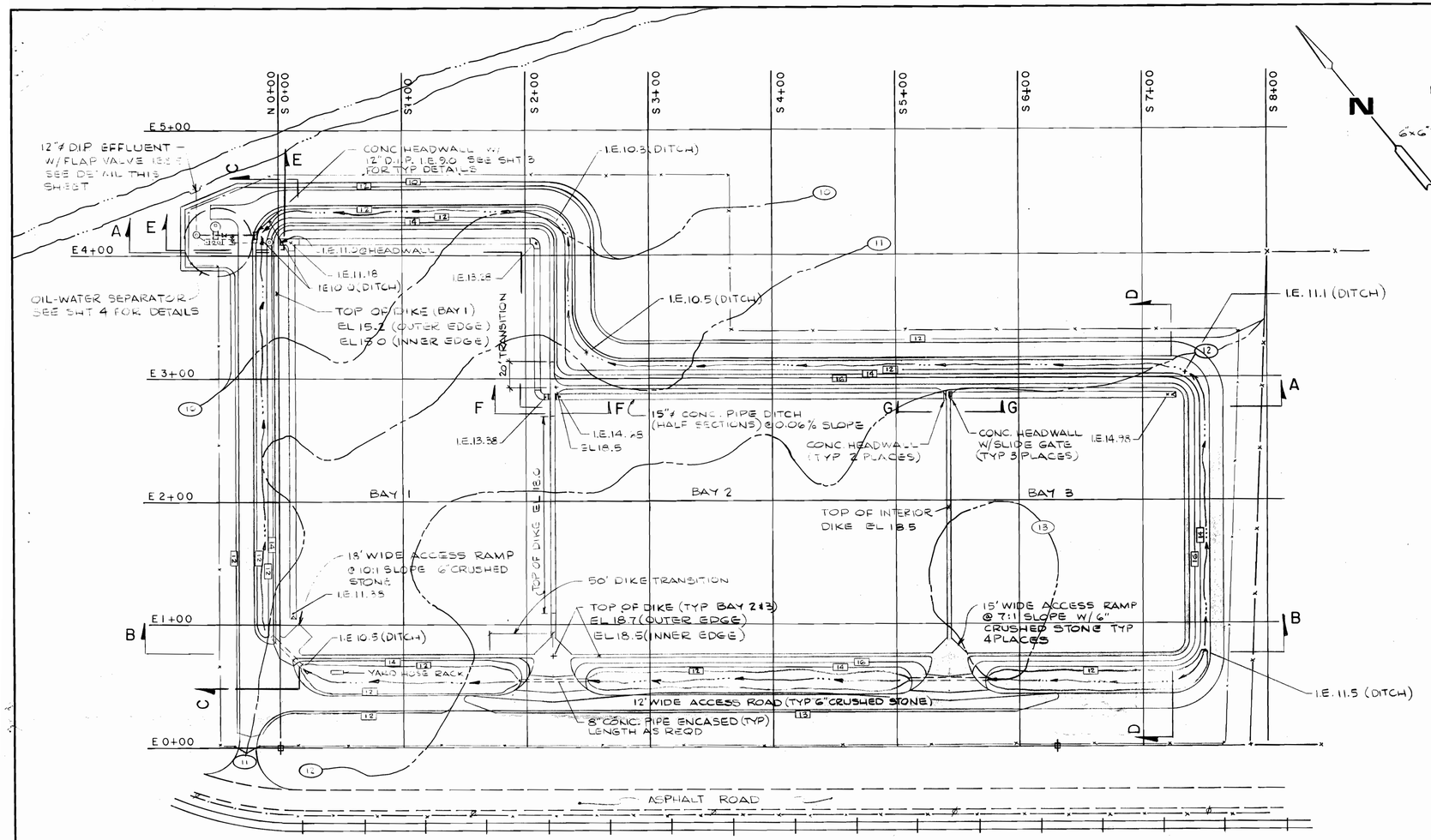


## GRADING PLAN

SCALE 1" = 50'

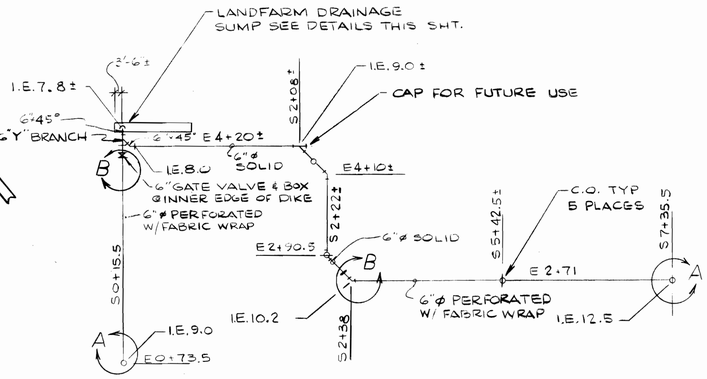


## LINE DIAGRAM – UNDERDRAIN

SCALE NONE

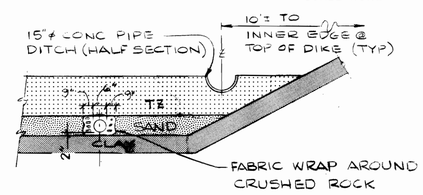


## DETAIL A

SCALE NONE

NOTE: OWNER TO FURNISH 15"ø (SPLIT) CONC. PIPE. CONTRACTOR SHALL INSTALL CONC. PIPE DITCH & CLASS 'A' CONC. TRANSITIONS AS REQD

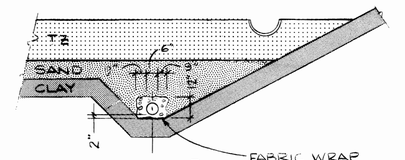


## DETAIL B

SCALE NONE

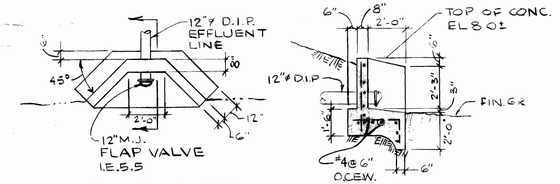


## HEADWALL DETAIL

SCALE NONE

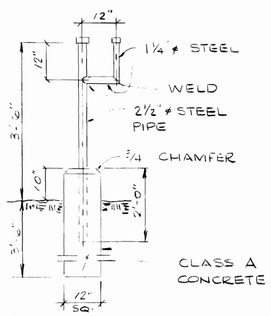


## YARD HOSE RACK DETAIL

SCALE NONE

NOTE: PAINT HOSE RACK W/ TWO COATS EXTERIOR ENAMEL

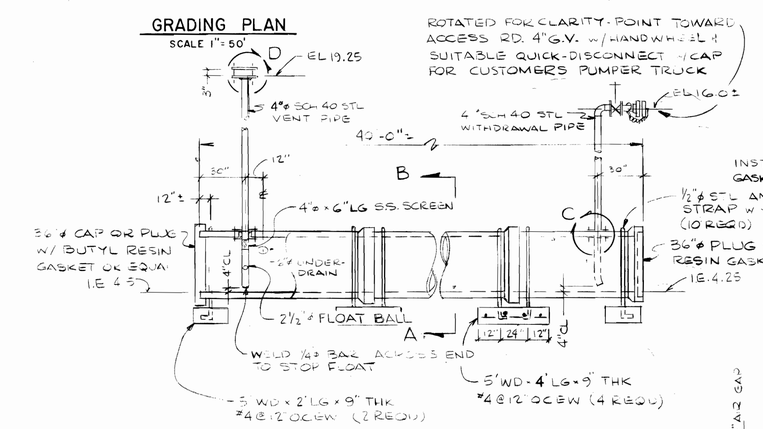


NOTE: PAINT EXPOSED METAL W/ 2 COATS EXTERIOR ENAMEL

## LANDFARM DRAINAGE SUMP

SCALE NONE

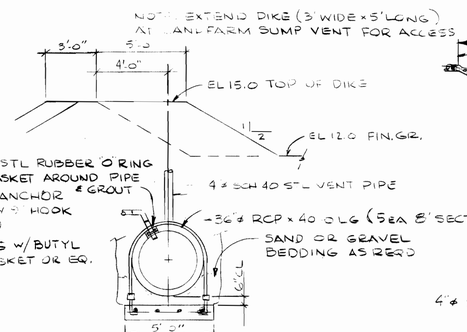


## VIEW A-B

SCALE NONE

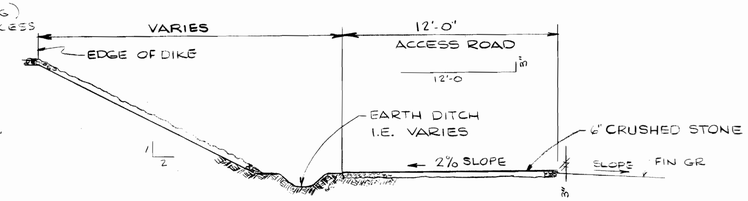


## TYPICAL ACCESS ROAD

SCALE 1/4" = 1'-0"

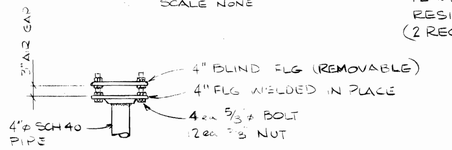


## DETAIL D

SCALE NONE

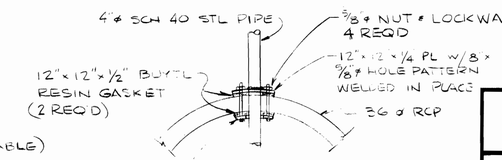


## DETAIL C

2 PLACES

SCALE NONE

THE AWARE CORPORATION — NASHVILLE, TENNESSEE / HOUSTON, TEXAS

AMERADA HESS CORPORATION
PORT READING REFINERY

NO. 1 LANDFARM

GRADING PLAN & DETAILS

| | | | |
|---|---|---|---|
| DESIGNED: E.T.W. | CHECKED: | | CLIENT APPR: |
| DATE: JAN 1985 | DATE: | | DATE: |
| DRAWN: L.I.H. | APPROVED: | | ISS. FOR CONST: |
| DATE: JAN 1985 | DATE: | | DATE: |
| SCALE NOTED | DATE PRINTED JAN 1985 | JOB NUMBER 6217 | DWG. NO. 2 OF 4 | REV. |

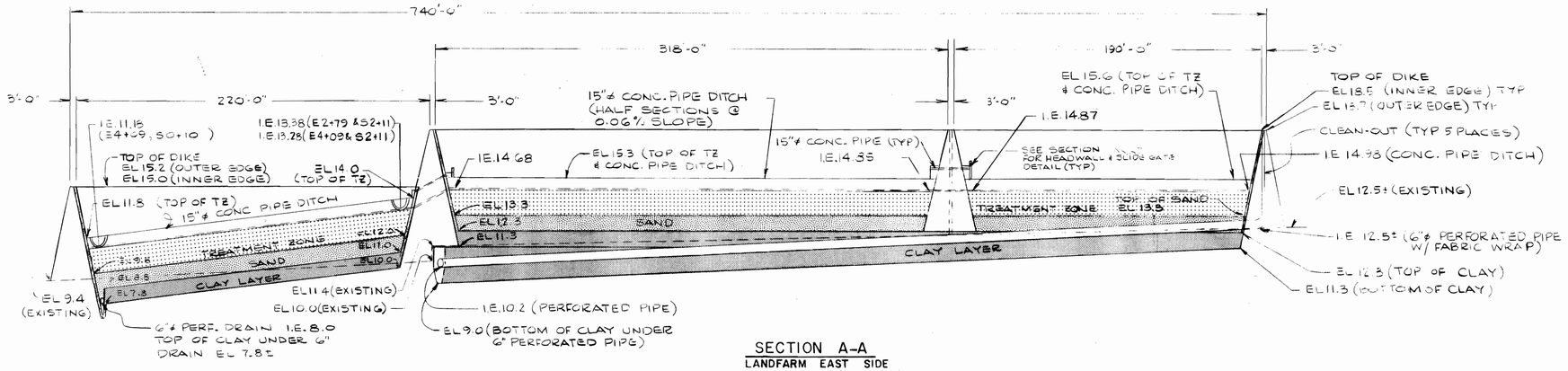


## SECTION A-A
**LANDFARM EAST SIDE**
SCALE 1"= 4'-0" VERT.
1"= 40'-0" HOR.

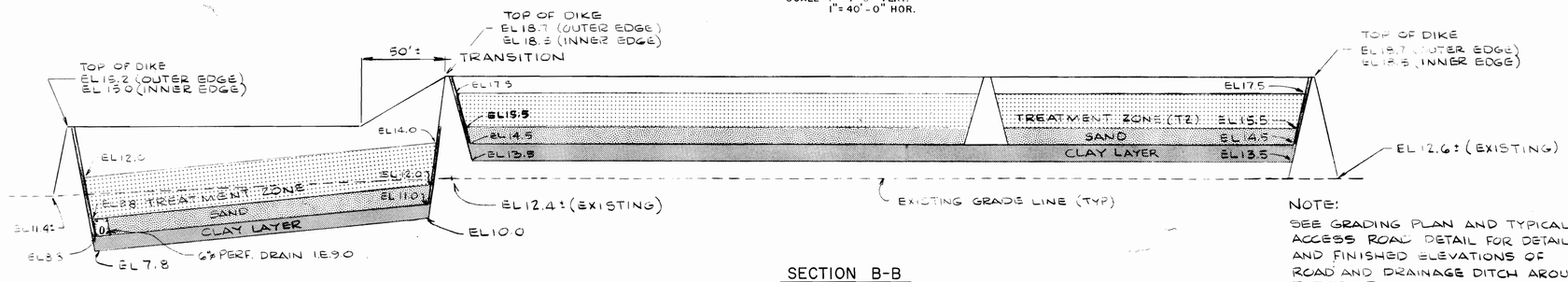


## SECTION B-B
**LANDFARM WEST SIDE**
SCALE 1"= 4'-0" VERT.
1"= 40'-0" HOR.

NOTE:
SEE GRADING PLAN AND TYPICAL ACCESS ROAD DETAIL FOR DETAILS AND FINISHED ELEVATIONS OF ROAD AND DRAINAGE DITCH AROUND EXTERIOR DIKE

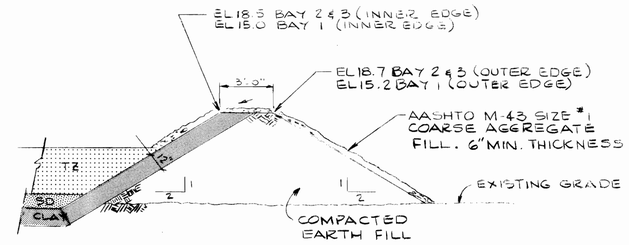


## TYPICAL EXTERIOR DIKE
SCALE 1/4"= 1'-0"

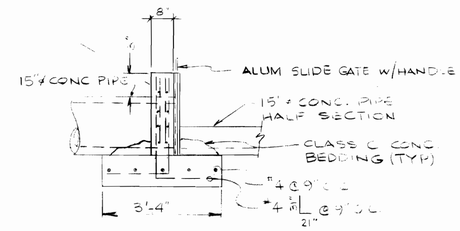


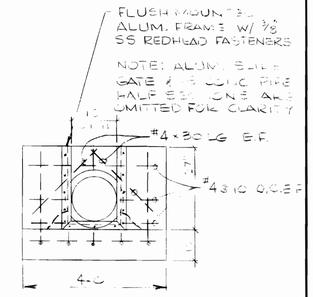


## TYPICAL HEADWALL & SLIDE GATE DETAIL
SCALE 1/2"= 1'-0"

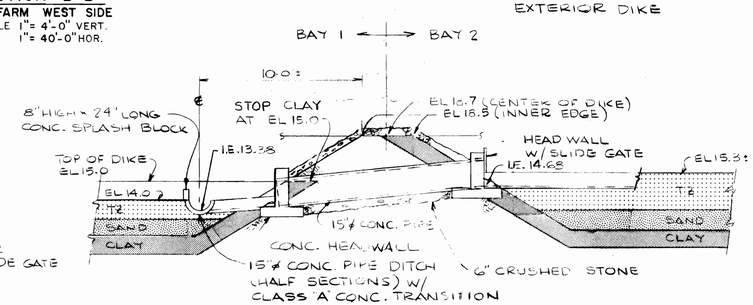


## SECTION F-F
**LANDFARM INTERIOR DIKE**
SCALE 1/4"= 1'-0"

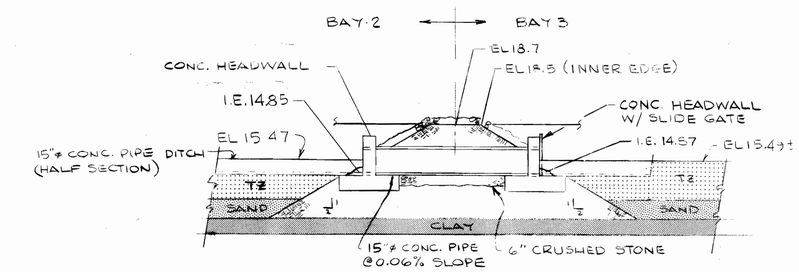


## SECTION G-G
**LANDFARM INTERIOR DIKE**
SCALE 1/4"= 1'-0"

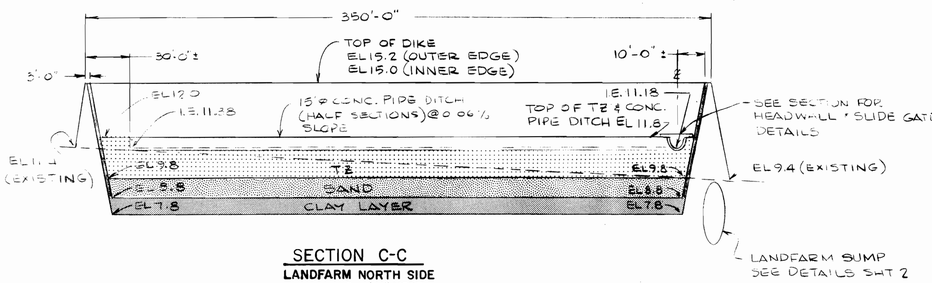


## SECTION C-C
**LANDFARM NORTH SIDE**
SCALE 1"= 4'-0" VERT.
1"= 40'-0" HOR.

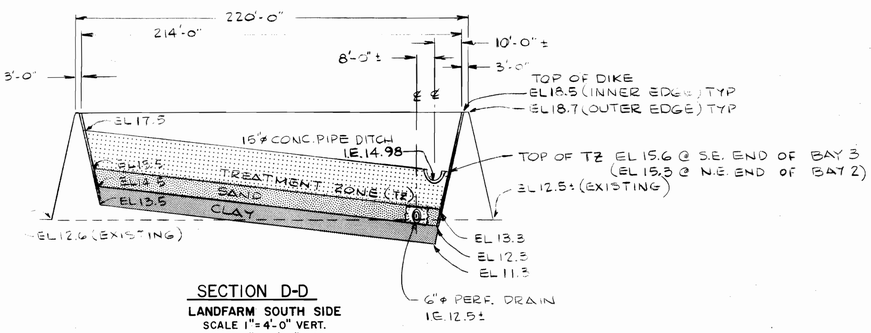


## SECTION D-D
**LANDFARM SOUTH SIDE**
SCALE 1"= 4'-0" VERT.
1"= 40'-0" HOR.

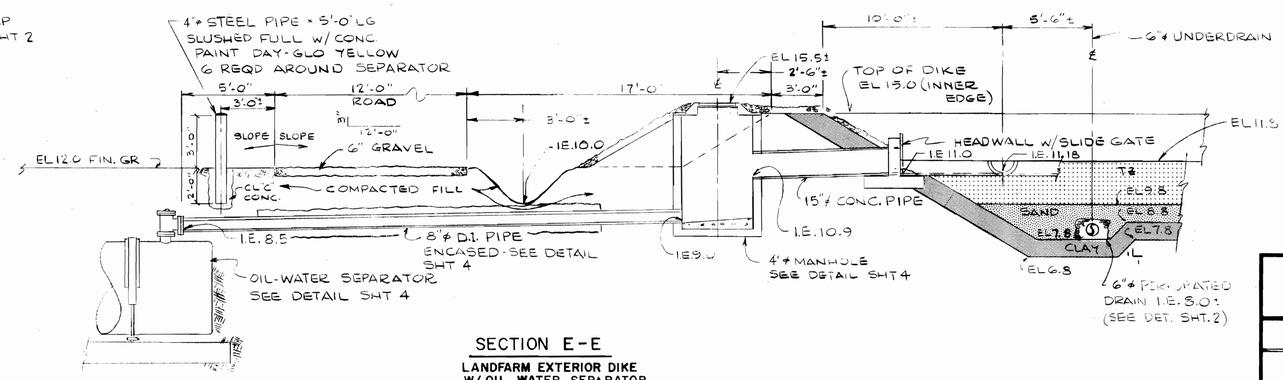


## SECTION E-E
**LANDFARM EXTERIOR DIKE W/ OIL-WATER SEPARATOR**
SCALE 1/4"= 1'-0"

THE AWARE CORPORATION — NASHVILLE, TENNESSEE / HOUSTON, TEXAS

AMERADA HESS CORPORATION
PORT READING REFINERY

NO I LANDFARM

LANDFARM SECTIONS & DETAILS

| | | | |
|---|---|---|---|
| DESIGNED: E.T.W. | CHECKED: | CLIENT APPR: | |
| DATE: JAN 1985 | DATE: | DATE: | |
| DRAWN: L.I.H. | APPROVED: | ISS FOR CONST: | |
| DATE: JAN 1985 | DATE: | DATE: | |
| SCALE: NOTED | DATE PRINTED: JAN 1985 | JOB NUMBER: 6217 | DWG. NO.: 3 OF 4 | REV |

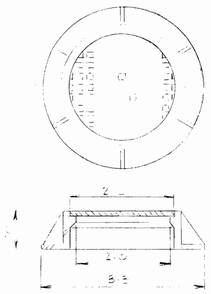


MANHOLE FRAME & COVER

NO SCALE

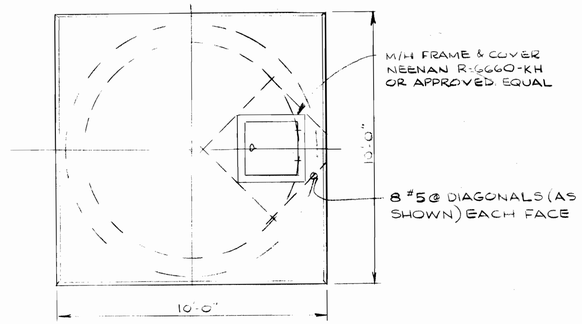


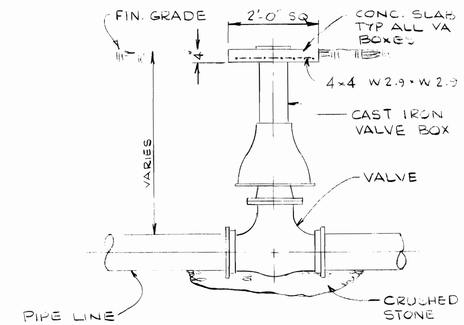


TYPICAL VALVE SETTING

NO SCALE

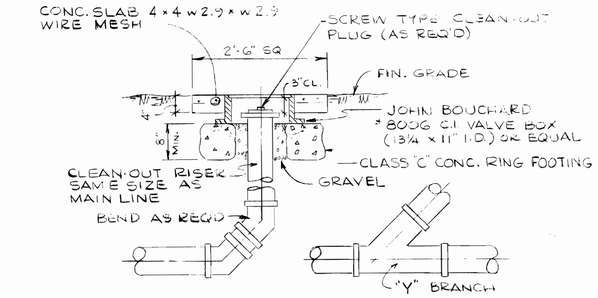


TYPICAL CLEANOUT DETAIL

NO SCALE

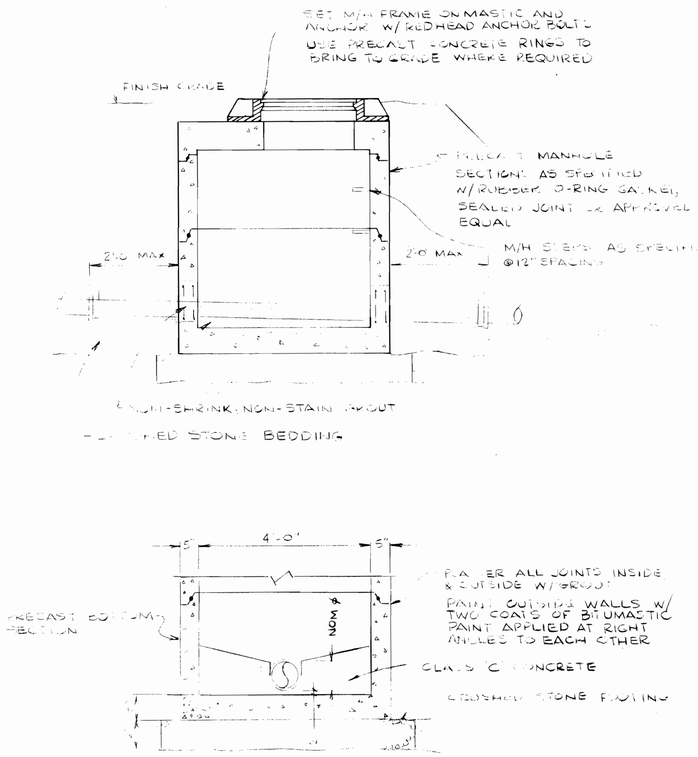


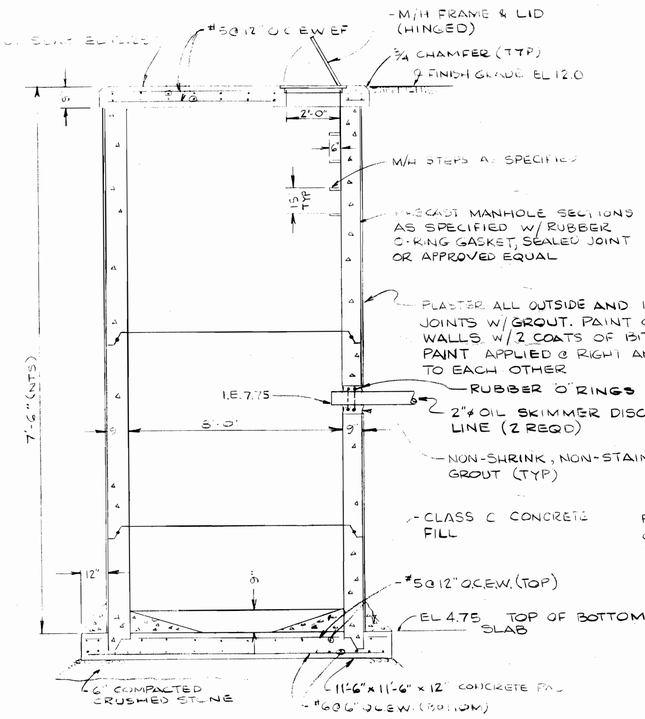


OIL SUMP

NO SCALE

NOTE:
OIL-WATER SEPARATOR PAY ITEM SHALL INCLUDE PREFABRICATED SEPARATOR, 8'-0 OIL SUMP, ALL 8" & 12" PIPING, FITTINGS, VALVES, ETC. FROM MANHOLE OR HEADWALL AT ROAD TO MANHOLE NORTH OF SEPARATOR, EXCAVATION, CONCRETE, AND ALL INCIDENTAL WORK INVOLVED

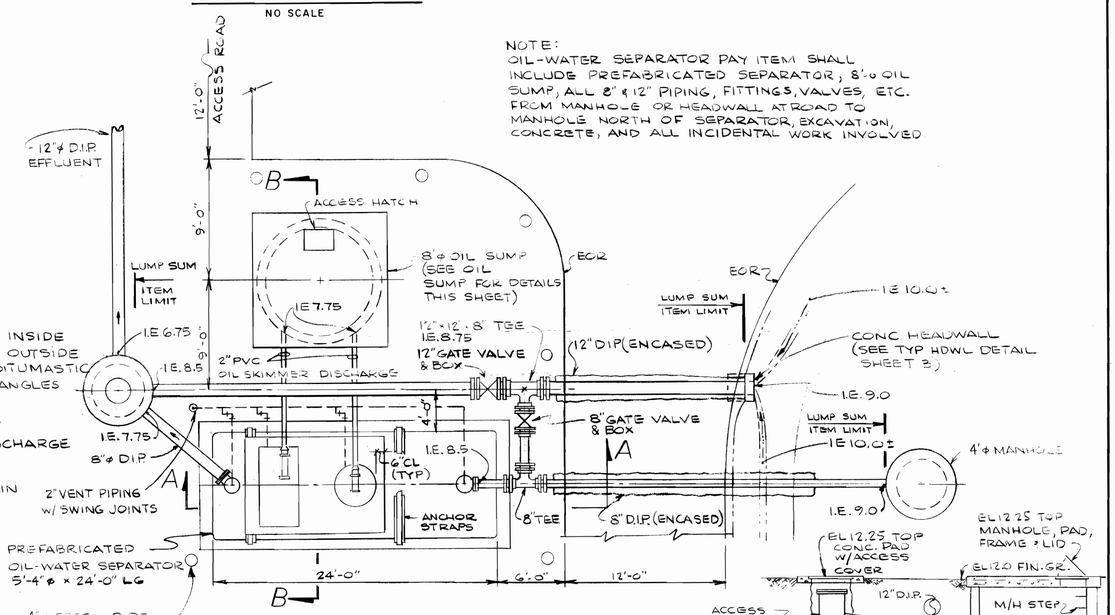


PLAN




STANDARD PRECAST MANHOLE

NO SCALE

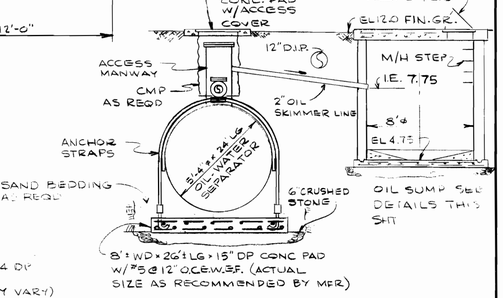


SECTION B-B

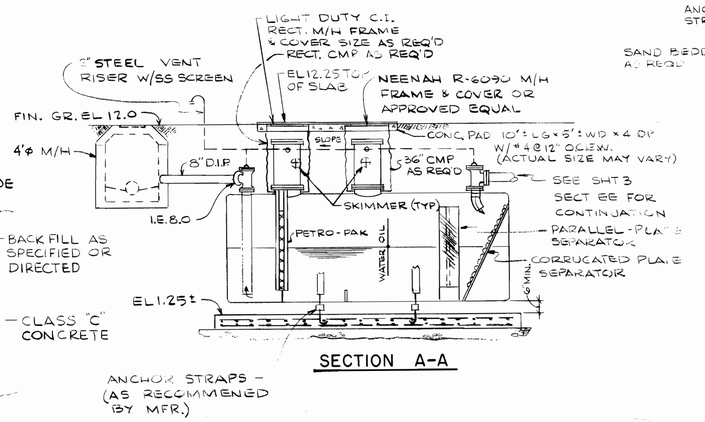


SECTION A-A

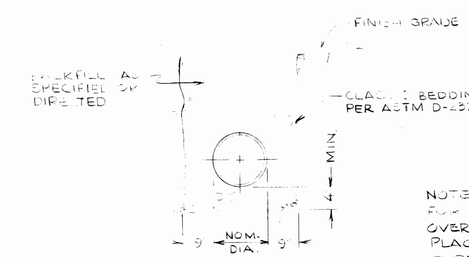


STANDARD PIPE BEDDING

NO SCALE

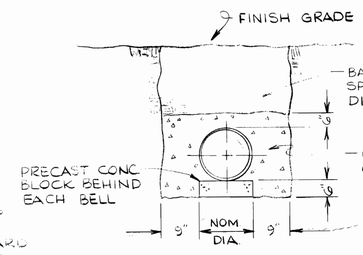


NOTE:
FOR ENCASEMENTS OVER 30' LENGTHS PLACE ¾ FIBERBOARD EXPANSION JOINT AT PIPE JOINTS BETWEEN POURS EVERY 30'

STANDARD CONCRETE ENCASEMENT

NO SCALE

OIL-WATER SEPARATOR

NO SCALE

THE AWARE CORPORATION — NASHVILLE, TENNESSEE / HOUSTON, TEXAS

AMERADA HESS CORPORATION
PORT READING REFINERY

NO I LANDFARM

MISCELLANEOUS DETAILS

| | | | |
|---|---|---|---|
| DESIGNED: E.T.W. | CHECKED: | CLIENT APPR: | |
| DATE: JAN 1985 | DATE: | DATE: | |
| DRAWN: L.I.H. | APPROVED: | ISS. FOR CONST: | |
| DATE: JAN 1985 | DATE: | DATE: | |

| SCALE | DATE PRINTED | JOB NUMBER | DWG. NO. | REV. |
|---|---|---|---|---|
| NOTED | JAN 1985 | 6217 | 4 OF 4 | |