Artificial Penetration No. 24
Crude Oil LLC
J. Parnell No. 2

Geostock Sandia

Artificial Penetration No. 24

API Number: 03139-12844
Operator: Crude Oil, LLC
Well Name: J. Parnell No. 2
Status: Plugged and Abandoned

Spud Date: October 8, 1990
Date Plugged: August 10, 2020
KB: 7 ft
Total Depth: 6,001 ft

Ground Level: 253 ft

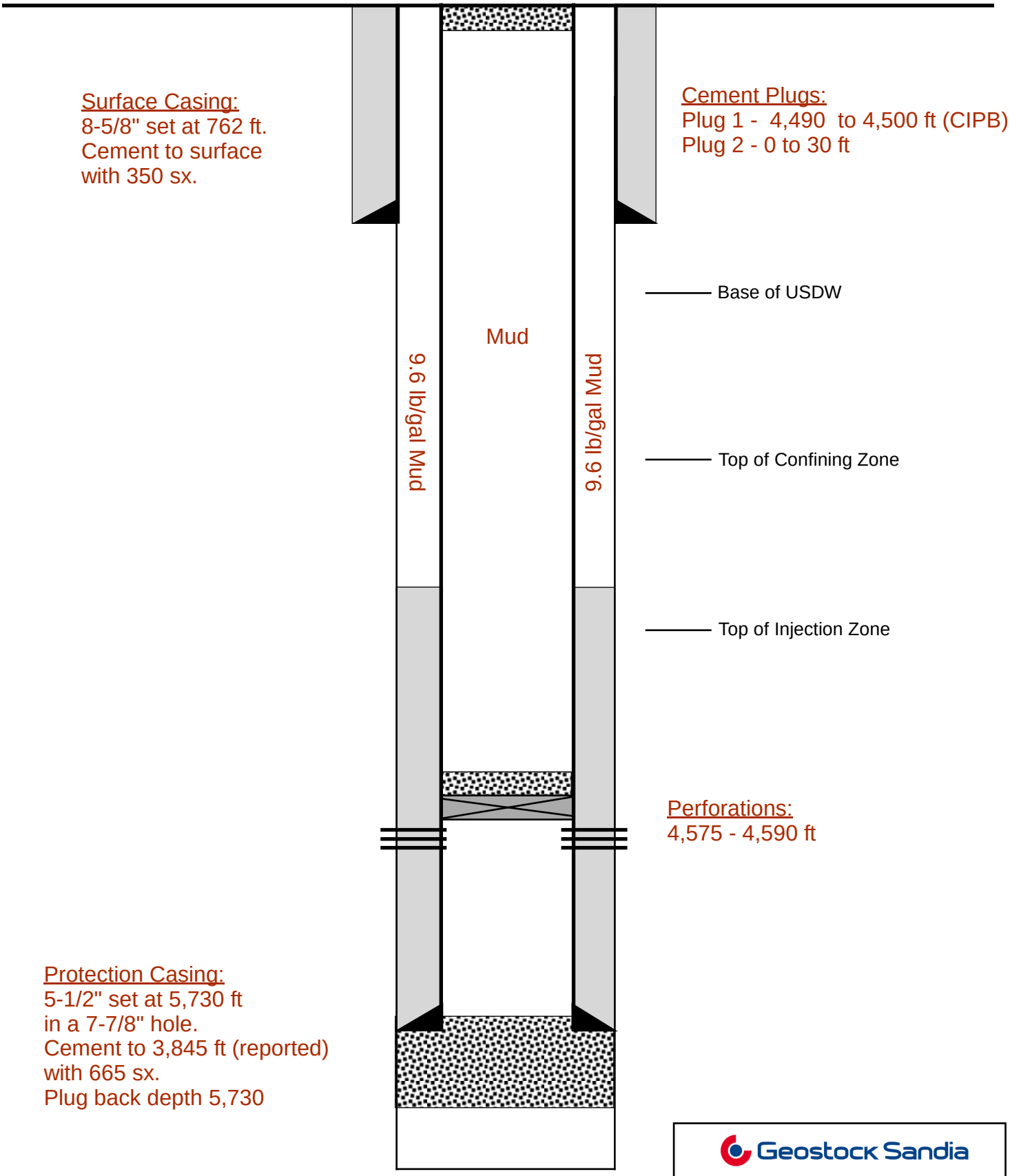

Geostock Sandia

Date: January 2023 *Not to Scale*
Schematic based upon Arkansas State Records

5M—5-71—63489—PP&SCo. AOGC-3(56)

STATE OF ARKANSAS
OIL AND GAS COMMISSION
El Dorado, Arkansas

Well Completion and Recompletion Report

(Instructions: See Reverse Side)

Notice: This form must be completed and filed prior to allowable being granted.

WELL DESCRIPTION

Field: Agnes Road North
Name of Operator: O'Brien Operating Co.
Pool Completed In: Cotton Valley
Lease Name: John Parnell No. 2
Address: Street: P.O. Box 6020
Exact Location: 1000' FWL & 2000' FNL
City: Shreveport
Sec. 13 Twp. 17S Rge. 16W
County: Union
State: LA 71136-6020
Date Commenced: 10-8-90
Date Completed: 10-26-90
Elevation: 252.8
Total Depth Drilled: 6001
Electric Log Run: Yes X No
Electric Log Filed: Yes X No

CASING, TUBING, PERFORATING AND COMPLETION PROGRAM USED IN WELL

Conductor: (Size & Wt.) None set at ft. w/ sks.
Surface: (Size & Wt.) 8-5/8 24# set at 762 ft. w/ 350 sks.
Intermediate: (Size & Wt.) None set at ft w/ sks.
Production: (Size & Wt.) 5-1/2 17# set at 5730 ft. w/ 665 sks.
Tubing: (Size & Wt.) 2-7/8" set at 5418 ft.
Peforations: Size 0.4 No. Per Foot 4
Peforated Intervals: 5533-42

Acidized: Yes No X; Interval w/ gals.
Fractured: Yes No X; Interval w/ lbs.
of sand; bbls. of oil.

LEASE DATA

1. Number of wells located on this lease, including this well 2
2. Tank battery to which this well is connected: Existing New X
3. Liquid production from this well is sold to (Enron Oil Trading & Transportation
(Address 1400 Smith St., Houston, TX 77002
4. Disposition of gas from this well: Vented X Fuel Sold
If sold, to whom
Address

PRODUCTION

Date of Test: 10-5-90 Actual Length of Time Tested: 24
Type Well: Flowing Gas Lift Pump X
Tubing Pressure: 20 Casing Pressure: 20 Choke Size: None
Net Oil Produced: 84 bbls. Gas Produced: Not Measured MCF % BSW: 0.2 GOR
Gravity Oil: 38 BHP Recorded
Net Oil in 24 Hours: 84 Open Flow Potential MCF
Purpose of this test: Original Completion X Workover Recompletion
Allowable Requested: 80 BOPD

REMARKS:
Please use reverse side of this page for all pertinent remarks

CERTIFICATE

I declare under the penalties of perjury that this report has been examined by me and to the best of my knowledge is true, correct and complete.

J R Gordon

ARKANSAS OIL AND GAS COMMISSION

RECORD OF PLUGGING REPORT (FIR 12)

General Information

Crude Oil, LLC

Current Permit Holder's Name:

SLP

Plugging Contractor's Name

Well Information

Permit Number	Well Name and Number			
34337	**Parnell, John 2**			
13	**17S**	**16W**	**AGNES ROAD NORTH**	**UNION**
Section	Township	Range	Field	County
33.24589	**-92.71439**			
Latitude	Longitude			

Record of Plugging

(From Bottom to Top Plug)	Plug 1	Plug 2	Plug 3	Plug 4	Plug 5	Plug 6
Size of Hole or Casing	5.5	5.5				
Type of Plug - CIBP/Cement	CIBP/Cement	Cement				
Top of Plug (Top of cement)	4490					
Bottom of Plug (Bottom of CIBP if used)	4500	30				
Cement (Sacks or BBLS)	1	3				
Date of Plug	8/10/2020	8/10/2020				

Casing Left in Well

	Surface	Casing 2	Casing 3	Casing 4	Casing 5	Tubing
Size	8.63	5.5				
Footage (From / To) (In Feet)	0 / 762	0 / 5730	/	/	/	/

Perforated / Open Hole Intervals						
From	4575					
To	4590					

○ Yes ◉ No	Were any modifications to the plugging requirements under General Rule B-8 or B-9 made during the plugging of the well? Detail modifications below and indicate if modifications were approved by the Director.
○ Yes ◉ No	Were any tools, drill pipe, or junk left in the well bore? Please explain below the well bore condition and what attempts were made to recover the tools, drill pipe, or junk. Attach any documents provided by the operator showing attempts to recover the tools, drill pipe, or junk, and indicate if any modifications to the plugging requirements in General Rule B-8 or B-9 as a result of "junk left in the well" were approved by the Director.
○ Yes ◉ No	Were all necessary service tickets received at the time of plugging? if no, explain below.
◉ Yes ○ No	Was the plugging operation witnessed by a Commission employee? BILLY HANEY *(Printed Name of Employee)*

Steve Rodgers will turn in the plugging tickets.

Inspected by: BILLY HANEY Date: 08-10-2020

Review for NNC or NOV: ○ Yes ◉ No If yes, check one ○ NNC ○ NOV ○ DNI ◉ NA Ref #: Date:

ADEQ referral: ○ Yes ◉ No Date of referral:

Rev 05/15

O'BRIEN OPERATING COMPANY
JOHN PARNELL NO. 2 SALTWATER DISPOSAL WELL
AGNES ROAD NORTH FIELD
SEC. 13 T17S R16W
UNION COUNTY, ARKANSAS

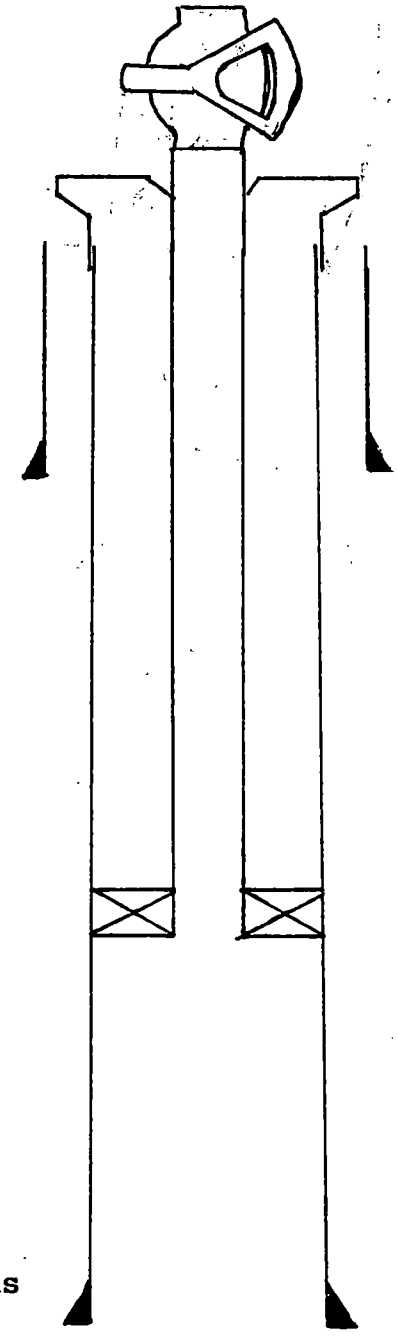

2-7/8" 2000 PSIG Gate Valve

5-1/2" x 2-7/8" Larkin Tubing Head

8-5/8" 22# Casing Set
at 762' w/350 sx cement

2-7/8" 6.5# J-55 Tbg

- Top of Cement at 3845'

Tension Packer Set at 4473'

Disposal Perforations
4574'-92'

Potential overall disposal
Interval 4570'-4635'

CIBP w/10' Cement at 5400'

Old Production Perforations
5533'-42'

5-1/2" 15.5# casing set at
5730' w/665 sx Cement

RECEIVED
JUL 19 1991
ARKANSAS OIL & GAS COMMISSION

ARKANSAS OIL AND GAS COMMISSION

Submit Form To Appropriate Regional Office

☐ Fort Smith Regional Office
3309 Phoenix Avenue
Fort Smith, Arkansas 72903
Phone: 479-646-6611
Fax: 479-649-7656

☐ El Dorado Regional Office
P.O. Box 11510
El Dorado, Arkansas 71730
Phone: 870-862-4965
Fax: 870-862-8823

RECEIVED
2020 JUL 30 PM 1:35
OIL AND GAS COMMISSION

FORM 11
NOTICE OF INTENT TO PLUG

Date: _____

General Information

Current Permit Holder's Name: Crude Oil LLC
Mailing Address: 270 Meadow Hills El Dorado AR 71730
Physical Address: 270 Meadow Hills
City: El Dorado
State: AR
Zip: 71730
Phone Number: 870 310 2620
Fax:
E-Mail: steve6158@gmail.com

Well Information

Permit Number: 34337
Well Name and Number: John Parnell 2
Section: 13
Township: 17S
Range: 16W
Field: Agnes Rd, North
County: Union

Well Specific Information

Casing Record (from largest diameter to smallest)

	Surface	Casing # 2	Casing # 3	Casing # 4	Casing # 5	Tubing
Size	8 5/8	5½				
Wt-Lbs/Ft	24	17				
Footage	762	5730				
Cement	350	665				
Hole Size						
Cementer						

Well bore total depth. 6001
Well bore plug back total depth. 5730
Is there any known tools, drill pipe, or junk known to exist in the well bore? ☐ Yes ☑ No
If this well is horizontally drilled, give kick-off point. _____
Is there a rat-hole or mouse-hole present at this location? ☐ Yes ☐ No

One-Half Mile Area of Review Information - For North Arkansas Dry Gas Wells ONLY

Is there any known water wells within 1/2 mile radius of this well? ☐ Yes ☐ No If yes, give location and depth of the deepest fresh water well within 1/2 mile. _____

List any zone which has been productive of gas within this well and within 1/2 mile of this well.

	Zone # 1	Zone # 2	Zone # 3	Zone # 4	Zone # 5	Zone # 6
Name of Zone						
Well Name and Number						
Permit Number						
Perforated Interval						

List any zone which contains any amount of hydrogen sulfide gas within this well and within one-half (1/2) mile of this well.

	Zone # 1	Zone # 2	Zone # 3	Zone # 4	Zone # 5	Zone # 6
Name of Zone						
Interval from/to (footage)						
Well Name and Number						
Permit Number						

List any zone that will not be covered by the surface casing plug which produced water during the drilling or subsequent plugging operations or known to be significant water producing formations in the area.

	Zone # 1	Zone # 2	Zone # 3	Zone # 4	Zone # 5	Zone # 6
Top of Zone						
Bottom of Zone						

CERTIFICATE

I declare under the penalties of perjury that this report has been examined by me and to the best of my knowledge is true, correct and complete.

Steve Rogers
Signature

Steve Rogers
Typed or Clearly Printed Name

See Instructions on Reverse Side

Revised 07/10

Mr. Steve Rogers
Crude Oil, LLC
270 Meadow Hills
El Dorado, AR 71730

March 24, 2020

Gary D. Looney
Assistant Director, Oil and Gas Commission
El Dorado Regional Office
P.O. Box 11510, 2215 W. Hillsboro
El Dorado, AR 71730

RE: Parnell 1, PN 33912
Parnell 2 SWD, PN 34337
Agnes Road North Field
Union County, AR

Dear Mr. Looney,

In response to your letter of February 25, 2020, in regards to the two Parnell Wells, on the Parnell King Place, I have no plans to attempt to put these wells into production. I would like your permission to have both of these wells plugged, equipment removed and the location restored, by mid-summer.

At the present time, I believe I would do more damage to the road and locations attempting this work. I just need a season of dryer weather. If you have any questions feel free to contact me at 870-310-2620.

Sincerely,

Steve Rogers

Steve Rogers

ARKANSAS
OIL AND GAS
COMMISSION

2215 West Hillsboro St. ■ P.O. Box 1472
El Dorado, Arkansas 71731-1472

William E. Wright
Director

Phone: (501) 862-4965
FAX Number: 862-8823

October 16, 1991

O'Brien Operating Co.
P.O. Box 6020
Shreveport, LA 71136-6020

Re: John Parnell #2 SWD
Sec. 13-17S-16W
Agnes Road North Field
Union County, AR

Gentlemen:

Your application filed for authority to dispose of produced salt water into the referenced well has been reviewed and appears to meet the necessary requirements of the state. Please consider this letter as your authority to use the referenced well for disposal of produced water only, and in accordance with the provisions of the application as filed. Disposal shall be down the tubing string with a packer set immediately above the disposal zone as approved. Provisions to monitor the annulus between the tubing and casing strings shall also be required.

Only water from the applied for and approved wells shall be authorized for disposal in the above referenced SWD well and pressures and volumes shall comply with the application as filed.

It is requested that upon completion of the referenced salt water disposal that this office be notified for inspection and running of a mechanical integrity test on the referenced well. Additionally, monthly disposal reports (AOGC-14) shall be required; whereas, both annulus pressure and injection pressure are shown. Further, a completion report shall be filed indicating the perforated interval and tubing and packer settings.

Yours very truly,

Martin T. Perdue

Martin T. Perdue
Petroleum Engineer/UIC

cc: DPC&E

COMMISSION MEMBERS ■ E. Boyd Alderson, Chairman, El Dorado
James O. Staggs, Vice-Chairman, Magnolia ■ Ned R. Price, Smackover ■ Spence A. Leamons, Fort Smith
J. David Reynolds III, Camden ■ Chris Weiser, Magnolia ■ Kent Dollar, Russellville
Phillip E. Norvell, Fayetteville ■ Robert C. Nolan, El Dorado

An equal opportunity employer

Permit #	Well Name & Number	Location
33912	Parnell, John Etal 1	13-17S-16W
34337	Parnell, John 2	13-17S-16W

rev. 3/17/89

APPLICATION TO INJECT SALT WATER/ENHANCED RECOVERY FLUID

Arkansas Oil & Gas Commission
2215 West Hillsboro
P.O. Box 1472
El Dorado, AR 71731-1472

Arkansas Department of Pollution
Control and Ecology
P.O. Box 851
El Dorado, AR 71731-0851

Note: In an effort to reduce the amount of paperwork necessary to permit a Salt Water Injection System both regulatory agencies involved have combined their applications. Upon completion of this form send a copy to each agency listed above. Any modifications, alterations, additions or changes in the permitted system, well connected thereto, and quantities of salt water injected will require permit revision by both the ADPC&E and the AO&GC. Both regulatory agencies must be notified in writing, and approval granted before modifications can be enacted. All applications for disposal of oil field wastes by other than injection wells shall be submitted to the ADPC&E's office in Little Rock.

PERMIT FEES--ARKANSAS DEPARTMENT OF POLLUTION CONTROL AND ECOLOGY
In accordance with Act 817 of 1983 and regulations promulgated thereto, a fee is required to be paid by the applicant prior to the issuance, modification, or renewal/reissuance of a permit. In addition, the permittee will be assessed an annual review fee in accordance with the permit fee regulations. The purpose of the permit fees is to help defray the administrative cost of issuance, renewal, inspection, modification, and monitoring associated with these permits. The initial permit application fee for salt water injection permits is $150.00, and should be submitted along with the permit application. This fee is payable by cash, check or money order and must be received by the Department of Pollution Control and Ecology before the permit can be issued.

PERMIT FEES--ARKANSAS OIL AND GAS COMMISSION
In accordance with Order Reference Number 185-84 a fee on one hundred dollars ($100.00) is required to be submitted with each application. In addition to the application fee a non-transferrable fee of one hundred dollars ($100.00) per injection/enhanced recovery well per year is required to be paid to the Arkansas Oil and Gas Commission by July 1 of each year.

OWNER/OPERATOR O'Brien Operating Company

STREET P.O. Box 6020

CITY Shreveport STATE LA ZIP 71136-6020

A list of the names, addresses and telephone numbers of supervisory and field personnel responsible for the disposal system.

J.R. Gordon P.O. Box 6020 Shreveport, LA 71136-6020 318/869-3247

John Rogers 1005 Palm Dr. El Dorado, AR 71730 501/863-8623

I. This application is for approval to inject (X) Produced Salt Water ( ) Enhanced Recovery Fluid into the (Zone) Cotton Valley of the Agnes Road North Field, at a depth interval of 4570 to 4635 feet SUB-SURFACE in the system known as the John Parnell No. 2 at a location described as being 1000' FWL & 2000' FNL of Section 13 Township 17S Range 16W of Union County, Arkansas. The nearest city/town is El Dorado, AR

It is proposed to begin disposal operations on or about August 15, 1991.

The estimated cost of the facilities is $ 20,000.

RECEIVED
JUL 19 1991
ARKANSAS OIL & GAS COMMISSION

This application is being filed under the requirements of Rule C-7 (C-7, C-8, or C-9 indicate which) of the General Rules and Regulations of the Arkansas Oil and Gas Commission.

C-7 If there is NO production within a 1/2 mile radius of the proposed inject well in the proposed injection zone.
C-8 If there IS production within a 1/2 mile radius of the proposed injection well in the proposed injection zone.
C-9 Using gas to maintain or repressure a reservoir.

II. (Complete either (A) or (B) as applicable.) See Attachment for construction requirements.

A. (X) This well is a COMPLETED well and will be converted to injection service; it is cased and cemented as indicated below:

(SIZE) 8-5/8 Surface Casing set at 762 feet with 350 sacks.

(SIZE) 5-1/2 Production Casing set at 5730 feet with 665 sacks.

(SIZE) 2-7/8 Injection Tubing set at 4470 feet with PACKER set at 4473 feet.
(Note: All injection wells must have tubing and a packer or other installation to protect the casing. The packer can be set no higher than 100 feet above injection interval.)

All available logs are enclosed: (X) Yes ( ) No

Hole/bit size is 7-7/8 inches. Total depth of the well is 6001 feet.

B. ( ) This well WILL BE DRILLED for injection service and a regular fee drilling application will be submitted. We plan to case and cement the well as indicated below:

(SIZE) _____ Surface Casing set at _____ feet with _____ sacks.

(SIZE) _____ Production Casing set at _____ feet with _____ sacks.

(SIZE) _____ Injection Tubing set at _____ feet with Packer set at _____ feet.
(Note: All injection wells must have tubing and a packer or other installation to protect the casing. The packer can be set no higher than 100 feet above injection interval.)

Hole/Bit size proposed is _____ inches. Total depth of well proposed is _____ feet.

III. Each of the operators listed below owning leases within the one-half (1/2) mile radius of the proposed injection well have received a copy of this application by certified mail and copies of the return receipts have been attached to this application as proof thereof.

LEASE	OPERATOR	ADDRESS
None	No Offset Operators	

RECEIVED
JUL 19 1991
ARKANSAS OIL & GAS COMMISSION

(If additional space is needed, attach a separate sheet.)

IV. A plat is attached which indicates the location of the proposed injection well with distances to nearest lease lines. Also shown on the plat are all wells of public record and fresh water wells of public record within a one-half (1/2) mile radius from the proposed injection well. A separate list of all wells which have penetrated the injection zone is included to indicate: (Information submitted MUST agree with AOGC records.)

1. Exact Legal Location
2. Current Operator
3. Lease Name
4. Name of Zone Currently Completed
5. Perforated Intervals
6. Total Depth
7. Drilling Date
8. Cementing Records
9. Record of Completion/Plugging
10. Current Status-Specify
    a. Producing
    b. Shut In
    c. Injection (disposal or enhanced rec.)
    d. Municipal Water Supply
    e. Permanently Abandoned
    f. Specify Other Status

V. A schematic drawing of the sub-surface installation is attached to show casing, approximate top and bottom of cement, tubing, packers, perforations, and well head of the injection well. Equipment must be installed and used to assure that injection will be confined to the proposed injection zone.

O'BRIEN OPERATING COMPANY
APPLICATION FOR SALTWATER DISPOSAL
JOHN PARNELL NO. 2
AGNES ROAD NORTH FIELD
UNION COUNTY, ARKANSAS
EXHIBIT XVI

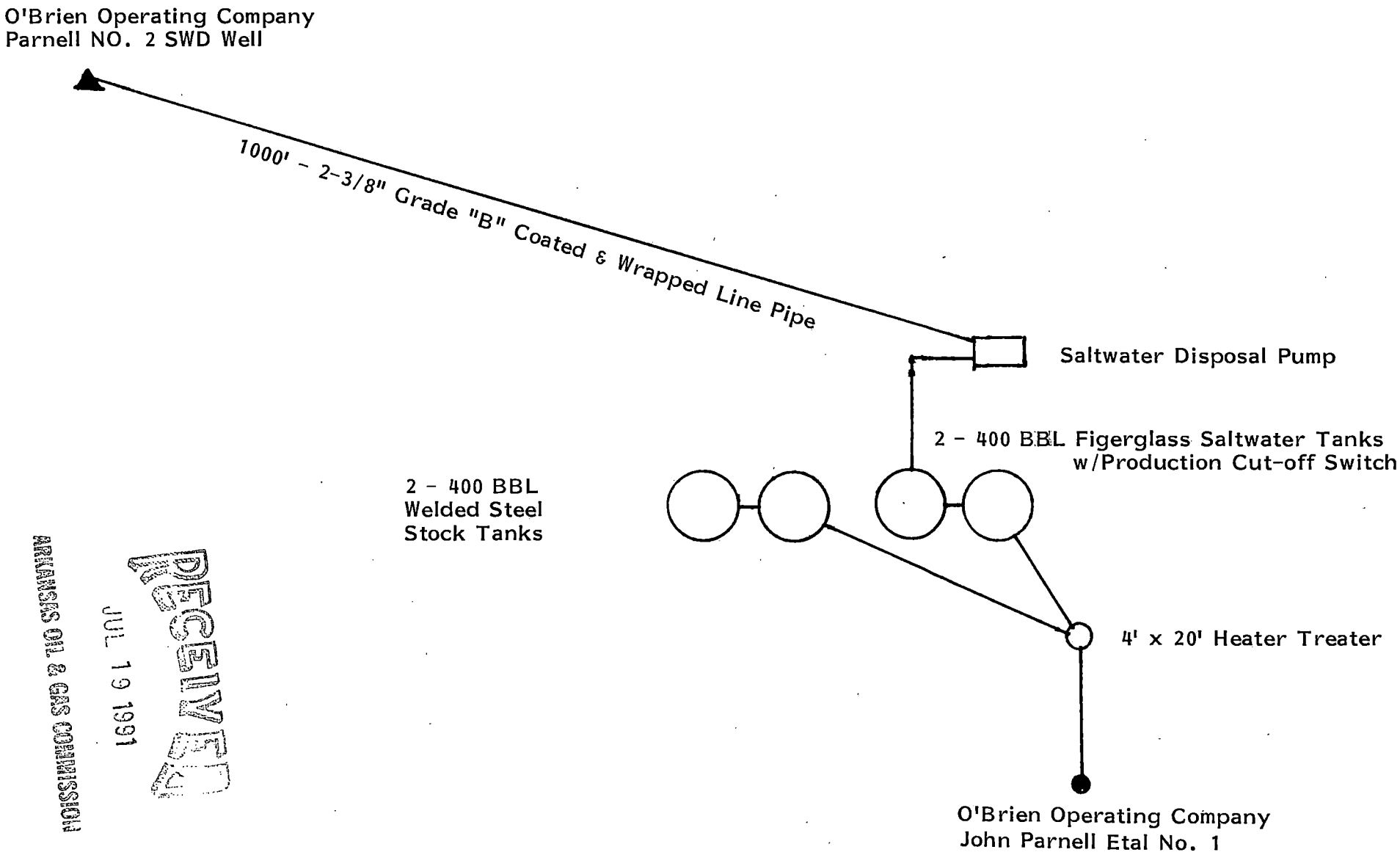

RECEIVED
JUL 19 1991
ARKANSAS OIL & GAS COMMISSION

STATE OF ARKANSAS)
) AFFIDAVIT
COUNTY OF Union)

I, the undersigned, being first duly sworn do state under oath in my capacity as Production Manager of O'Brien Operating Co. that O'Brien Operating Co. owns assets within the State of Arkansas in excess of its liabilities in an amount sufficient to enable it to comply fully with Act 902 of 1983, as amended by Act 559 of 1985 of the State of Arkansas as by law required.

This Affidavit of Financial Responsibility is made and executed for filing with the Arkansas Oil and Gas Commission in conformity with Rule B-2 of the General Rules and Regulations of said Commission.

Further affiant saith not.

J.R. Gordon

J.R. Gordon

SUBSCRIBED AND SWORN TO before me, the undersigned Notary Public, on this the 18th day of July, 1991.

Pauline P. Dempsey
Notary Public

PAULINE P. DEMPSEY, Notary Public
Caddo Parish, Louisiana
My Commission Is For Life

My Commission Expires:
With life

RECEIVED
JUL 19 1991
ARKANSAS OIL & GAS COMMISSION

VI. A record of injection well stimulation is listed: (Indicate if no stimulation attempted.)

DATE	STIMULATION	RESULTS

(If additional space is needed, attach a separate sheet.)

VII. A sign will be maintained at the well site to indicate the operator, well name, well number and location description.

VIII. To insure mechanical integrity of the injection well an initial mechanical integrity test and periodic tests at intervals not greater than once every five (5) years will be conducted to confirm that the packer and tubing are containing the injection fluids. To facilitate pressure testing of each casing annulus, a valve and standard one-half (1/2) inch female connection to receive a pressure gauge must be maintained at the well head.

IX. Within fifteen (15) days after completion of the well, a completion report, well logs, and injectivity test performed on the well, which were not previously filed, will be filed with the Oil and Gas Commission.

X. The Oil and Gas Commission will be notified in writing before the beginning of injection to allow inspection of the well and conduct the initial mechanical integrity testing.

XI. Attached is evidence of financial responsibility to plug and abandon the disposal/enhanced recovery well or wells by the method and procedure required by the Oil and Gas Commission. If required by the Commission, a bond of an amount not to exceed one hundred thousand ($100,000) dollars will be furnished to provide for adequate plugging of the injection well or wells.

XII. Attached is a notarized copy of the proof of publication of this application as it ran in one (1) publication in a legal newspaper having a general circulation in the county or in each county, if there shall be more than one, in which the lands embraced within the application are situated, and by mailing or delivering a copy of the application to each operator of producing or drilling wells within a one-half (1/2) mile radius of the injection well. Such notice shall be published, mailed or delivered at least ten (10) days, but not more than thirty (30) days, prior to the date on which the application is mailed or filed with the Commission.

For information on how to complete Sections XIII through XVIII, please refer to ADPC&E's Guide for SWD Applications. This guide is available from the El Dorado office.

XIII. Produced salt water to be injected in this well will be received from the following wells:

OPERATOR O'Brien Operating Company

LEASE John Parnell WELL NO. 1

EXACT LEGAL LOCATION 1980' FWL & 2324 FNL Sec 13 T17S R16W

STOCK TANK NO. 16-446 16-447 INJ. VOL. (BBLS/DAY) 350

OPERATOR

LEASE WELL NO.

EXACT LEGAL LOCATION

STOCK TANK NO. INJ. VOL. (BBLS/DAY)

OPERATOR

LEASE WELL NO.

EXACT LEGAL LOCATION

STOCK TANK NO. INJ. VOL. (BBLS/DAY)

OPERATOR

LEASE WELL NO.

EXACT LEGAL LOCATION

STOCK TANK NO. INJ. VOL. (BBLS/DAY)

RECEIVED
JUL 19 1991
ARKANSAS OIL & GAS COMMISSION

XIII. Produced salt water to be injected in this well will be received from the following wells:

OPERATOR _____

LEASE _____ WELL NO. _____

EXACT LEGAL LOCATION _____

STOCK TANK NO. _____ INJ. VOL. (BBLS/DAY) _____

OPERATOR _____

LEASE _____ WELL NO. _____

EXACT LEGAL LOCATION _____

STOCK TANK NO. _____ INJ. VOL. (BBLS/DAY) _____

OPERATOR _____

LEASE _____ WELL NO. _____

EXACT LEGAL LOCATION _____

STOCK TANK NO. _____ INJ. VOL. (BBLS/DAY) _____

OPERATOR _____

LEASE _____ WELL NO. _____

EXACT LEGAL LOCATION _____

STOCK TANK NO. _____ INJ. VOL. (BBLS/DAY) _____

OPERATOR _____

LEASE _____ WELL NO. _____

EXACT LEGAL LOCATION _____

STOCK TANK NO. _____ INJ. VOL. (BBLS/DAY) _____

OPERATOR _____

LEASE _____ WELL NO. _____

EXACT LEGAL LOCATION _____

STOCK TANK NO. _____ INJ. VOL. (BBLS/DAY) _____

OPERATOR _____

LEASE _____ WELL NO. _____

EXACT LEGAL LOCATION _____

STOCK TANK NO. _____ INJ. VOL. (BBLS/DAY) _____

OPERATOR _____

LEASE _____ WELL NO. _____

EXACT LEGAL LOCATION _____

STOCK TANK NO. _____ INJ. VOL. (BBLS/DAY) _____

RECEIVED
JUL 19 1991
ARKANSAS OIL & GAS COMMISSION

XIV. A. The estimated maximum amounts of produced salt water to be injected are 350 barrels per day. NO other fluid or product may be injected into the proposed injection well without prior permission of the appropriate regulatory agency.

B. The maximum injection pressure at the injection well head will be less than 0.5 pig for each foot of sub-surface depth to the injection zone. An exception for this maximum pressure may be granted if the applicant presents sufficient evidence to justify the exception. The injection pressure shall be limited to that pressure which will not fracture the confining beds of the proposed injection zone, or cause movement of injection or formation fluids into fresh water zones. Estimated injection pressure is 750 psig. The actual volumes of salt water injected and well head pressure will be reported monthly on AOGC Form 14.

XV. A description of the method to be used for monitoring disposal system flows and pressures is to be included. This should contain a description of how such flow rates and pressures can be verified or checked for accuracy.

XVI. A drawing is attached showing the locations of the items below. The scale of the drawings should be clearly indicated and the approximate direct distance between producing wells and disposal wells specified on the drawing.

1. Connected
2. Holding Tanks (Show size)
3. Tank Batteries
4. Treaters, Gunbarrels
5. Piping (Show size and materials)
6. Separators
7. Pumps
8. Production Cut-Off Switches
9. Emergency Storage Facilities (Show length, depth, width or tank size in Bbls.)

(NOTE: See ADPC&E Guide for information on storage facilities.)

XVII. HOLDING TANK REQUIREMENTS FOR TRANSFER STATIONS
(See terminology list at end of Section XVIII for meanings of abbreviations.)

A. For DTV/DIV 0.4

1. If salt water can be transferred to the Main Disposal Station without the addition of mechanical head (pumps):

   a. MSR=100 BBL, or
   b. MSR=DTV (If DTV is 100 BBL/Day)

2. If salt water cannot be transferred to the Main Disposal Station without the addition of mechanical head (pumps):

   a. Automatic cut-off switches to producing wells connected to the Transfer Station are required. The cut-off switch must be situated on the Transfer Station salt water storage vessel to provide a storage capacity of equal to DTV/24 (BBLS.) above the cut-off level, or;
   b. MSR=DTV/4 (BBLS.) with a minimum storage capacity of 100 BBLS, or DTV (if DTV is 100 BBLS/Day.)

B. For DTV/DIV 0.4

1. Automatic cut-off switches to producing wells connected to the Transfer Station are required. The cut-off switch must be situated on the Transfer Station salt water storage vessel to provide storage capacity equal to DTV/24 (BBLS) above the cut-off level, or;

2. MSR=DTV/2 (BBLS) with a minimum storage capacity of 100 BBLS or DTV (if DTV is 100 BBLS/Day.)

C. If the Transfer Station is not connected to the Main Disposal Station by pipeline, i.e. salt water must be transported by truck, MSR=3 DTV (BBLS)

D. The Transfer Station salt water storage vessels shall be surrounded by an impermeable dike or firewall with a capacity equal to 1.5 times the volume of the largest vessel contained within the walls.

E. Any alternate system or design which meets the approval of the ADPC&E.

XVIII. HOLDING TANK REQUIREMENTS FOR MAIN DISPOSAL STATIONS

A. For IP/MP 0.4

1. If salt water can be disposed into the disposal well without the addition of mechanical head (pumps):

   a. MSR=100 BBLS, or;
   b. MSR=DIV if DIV 100 BBLS/Day

RECEIVED
JUL 19 1991
ARKANSAS OIL & GAS COMMISSION

2. If salt water cannot be disposed into the disposal well without the addition of mechanical head (pumps):

   a. Automatic cut-off switches to producing wells connected to the Main Disposal Station are required. The cut-off switch must be situated on the Main Disposal Station salt water storage vessel to provide a storage capacity equal to DIV/24 (BBLS) above the cut-off level, or;

   b. MSR=DIV/2 with a minimum storage capacity of 100 BBLS, or DIV (if DIV 100 BBLS/Day).

B. For IP/MP 0.4

   1. Automatic cut-off switches to producing wells connected to the Main Disposal Station are required. The cut-off switch must be situated on the Main Disposal Station storage vessel to provide a storage capacity equal to DIV/24 (BBLS) above the cut-off level, or;

   2. MSR=DIV/2 with a minimum storage capacity of 100 BBLS, or DIV (if DIV is 100 BBLS/Day).

C. The Main Disposal Station salt water storage vessels shall be surrounded by an impermeable dike or firewall with a capacity of 1.5 times the volume of the largest vessel contained within the walls.

D. Any alternative system or design which meet the approval of the ADPC&E.

TERMINOLOGY

D--Sub-surface depth to the top of the injection one as listed in Section I of the permit application.

DIV--Estimated maximum amounts of salt water to be injected daily as reported in Section XIV (A) of the permit application (BBLS.).

DTV--Amounts of salt water transferred daily from production separators to the Transfer station. (BBLS)

IP--Estimated injection pressure as listed in Section XIV (B) of the permit application (psig). If this pressure is less than or equal to 1 psig, a value of 1 psig shall be used in the calculation of the minimum required storage.

Main Disposal Station--The site, in the construction and operation of a SWD system, utilized for the final collection and storage of produced salt water prior to the disposal by sub-surface injection.

MP--Maximum allowable well head pressure, equal to 0.5 psi per foot of sub-surface depth to the injection zone (0.5 D, psig)

MSR--Minimum required storage, as calculated by the appropriate formula (BBLS)

Transfer Station--A site shall be considered a Transfer Station if produced salt water cannot be transferred directly to the Main Disposal Station from the production separator, i.e. a salt water storage vessel is connected at the site.

-- Less than

-- Greater than or equal to

XIX. A copy of the Spill Prevention Control and Countermeasures (SPCC) plan for this system must be available for inspection upon request.

RECEIVED
JUL 19 1991
ARKANSAS OIL & GAS COMMISSION

I, Morgan P. O'Brien,

do certify that the information presented within this application and all attachments are to the best of my knowledge and belief, true, correct and complete.

Morgan P. O'Brien
Signature of Applicant

Executive Vice-President
Title

7/18/91
Date Application

MAIN DISPOSAL STATION REQUIREMENTS

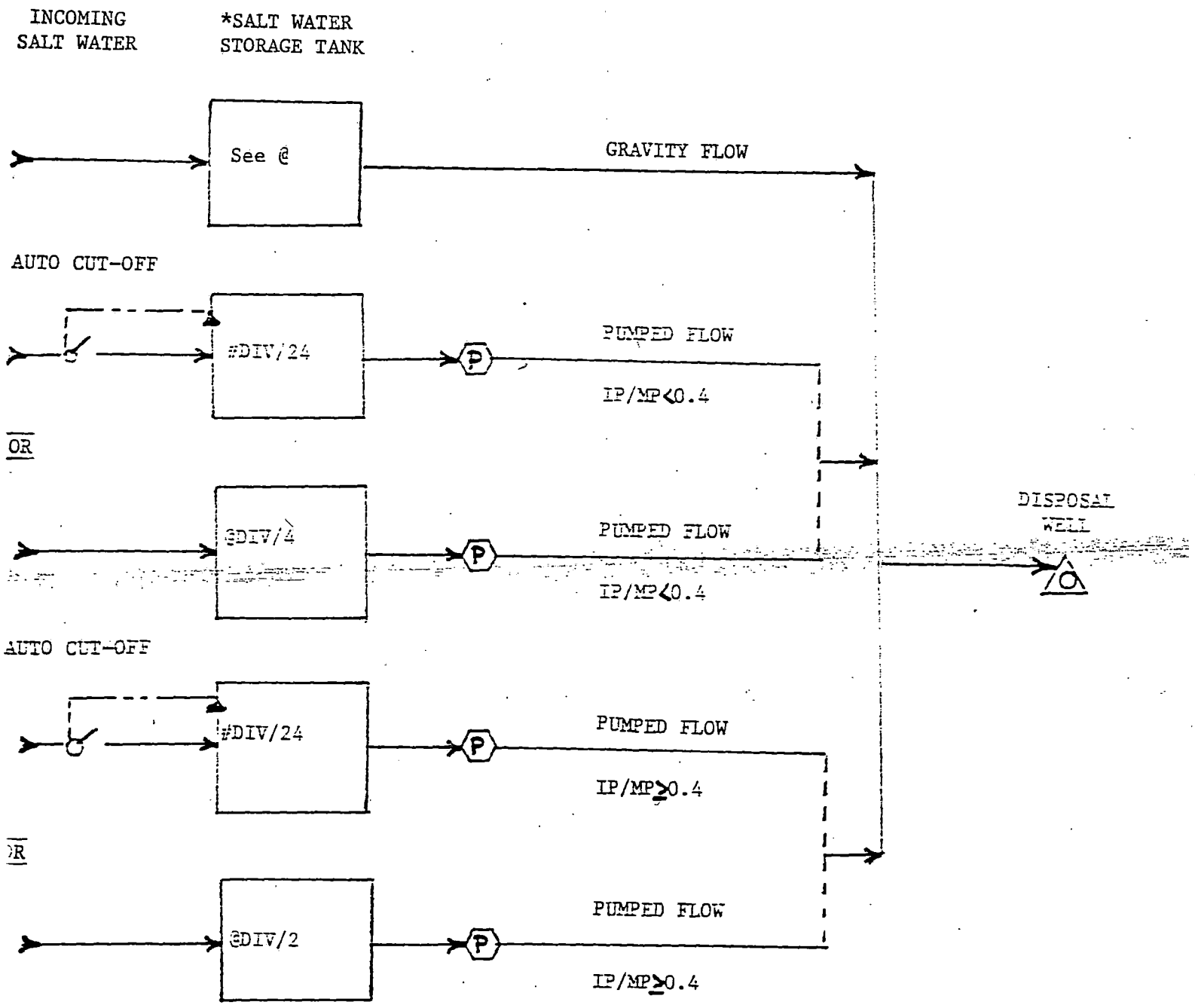

@ 100 barrel minimum or DIV if < 100 BBL/Day.

* Salt Water Storage Tanks must be surrounded by impermeable firewalls capable of holding 1.5 times the volume of the largest tank enclosed within the dike walls.

The cut-off switch must be situated on the salt water storage tank to provide a storage capacity equal to DIV24 (BBLS) above the cut-off level.

RECEIVED
JUL 19 1991
ARKANSAS OIL & GAS COMMISSION

TRANSFER STATION REQUIREMENTS

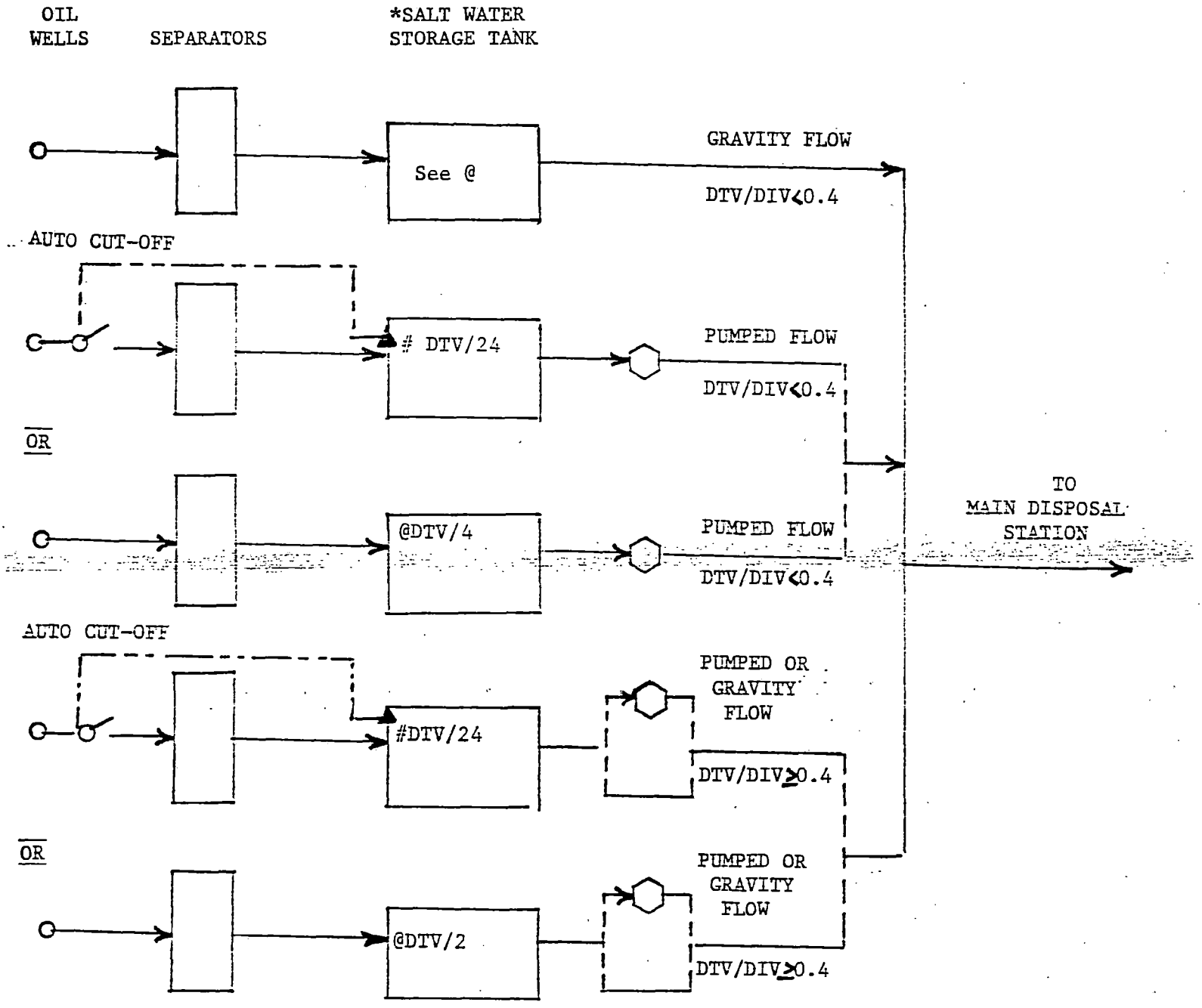

@ 100 barrel minimum or DTV if < 100 BBL/Day.

* Salt Water Storage Tanks must be surrounded by impermeable firewalls capable of holding 1.5 times the volume of the largest tank enclosed within the dike walls.

The cut-off switch must be situated on the salt water storage tank to provide a storage capacity equal to DTV24 (BBLS) above the cut-off level.

RECEIVED
JUL 19 1991
ARKANSAS OIL & GAS COMMISSION

O'BRIEN OPERATING COMPANY
APPLICATION FOR SALTWATER DISPOSAL
JOHN PARNELL NO. 2
AGNES ROAD NORTH FIELD
UNION COUNTY, ARKANSAS
EXHIBIT XV

Disposal volumes will be monitored by the installation of a Halliburton turbine meter and the volumes recorded daily. Disposal system pressures will be monitored by pressure gauges installed at the discharge of the disposal pump and on the tubing of the disposal well and recorded daily.

RECEIVED
JUL 19 1991
ARKANSAS OIL & GAS COMMISSION

ATTENTION: Answer all questions and submit complete form with permit application.

STATUS OF APPLICANT

1. Is the applicant organized as a solely owned proprietorship?
   Yes___ No X
   If yes, please list his/her name and address:

   _____

2. Is the applicant organized as a corporation?
   Yes X No___
   If yes, is it a foreign or domestic corporation? Domestic

   Is the corporation currently registered to do business with the Arkansas Secretary of State?
   Yes X No___

   (Please note, no permit will be issued to a corporation, until the proper documents have been filed with the Secretary of State. Also, note that the name of the applicant must be identical to the name of the registered corporation.)

3. Is the applicant organized as a partnership?
   Yes___ No X
   If yes, is it a general or limited partnership?

   Please list the names and addresses of all of the partners involved:

   _____

   _____

   Attach an additional sheet if necessary

4. Is the applicant organized as a joint venture?
   Yes___ No X
   If yes, please list the names and addresses of all of the principals involved:

   _____

   _____

   Attach an additional sheet if necessary

RECEIVED
JUL 19 1991
ARKANSAS OIL & GAS COMMISSION

SIGNATORY REQUIREMENTS

1. Has the application been signed by the individual owner, a corporate officer, a partner or a principal? Yes

   If not, then the applicant must also submit a document signed by the individual owner, a corporate officer, a partner or a principal that delegates the signatory authority to whomever has signed the application.

FORM 5-Rev.—(Statewide)
5M—9-49—104500—C.-McB.

ARKANSAS OIL AND GAS COMMISSION
El Dorado, Arkansas

PLUGGING RECORD

(Within five days after the plugging of any well has been accomplished, the owner or operator thereof shall file this form with the Commission, setting forth in detail the method used in plugging the well.)

PLUGGING METHODS AND PROCEDURE—The methods and procedure for plugging a well shall be as follows: (a) The bottom of the hole shall be filled to the top of each producing formation, or a bridge shall be placed at the top of each producing formation, and in either event a cement plug not less than 15 feet in length shall be placed immediately above each producing formation whenever possible.

(b) A cement plug not less than 15 feet in length shall be placed at approximately 50 feet below all fresh water-bearing strata.

(c) A plug shall be placed at the surface of the ground in each hole plugged in such manner as not to interfere with soil cultivation.

(d) The interval between plugs shall be filled with an approved heavy mud-laden fluid.

(e) An uncased rotary drilled hole shall be plugged with approved heavy mud up to the base of the surface string at which point a plug of not less than 15 feet of cement shall be placed. The hole shall also be capped similar to other abandoned holes.

(f) The operator shall have the option as to the method of placing cement in the hole by (1) dump bailer (2) pumping through tubing (3) pump and plug, or (4) other method approved by the Commission.

Producer Kin-Ark Oil Company Field East Lisbon

Address all correspondence concerning this Pool Smackover Lime

form to: Kin-Ark Oil Company County Union

Street 411 North Murphy City El Dorado State Arkansas

Lease Haney Well No. 1 Sec. 13 Twp. 17S Rge. 16W

Date well was plugged 7-10-56 Total Depth of Well 6762

Was well filled with mud-laden fluid, according to regulations of the Commission? Yes

How was mud applied? Pumped Were plugs used? Yes If so, show all shoulders left for casing, depth of each, and size of casing, size and kind of plugs used, and depths placed. Also amount of cement and rock Pumped cement plug in bottom of casing, through tubing, from 6720' to 6655' 8 sacks

Was notice given before plugging, to all available adjoining lease and land owners as required?

Information on Casing Reclaimed from Well

SIZE	RECOVERED FROM WELL		LEFT IN WELL	
	Feet	Inches	Feet	Inches
9 5/8	None		821	
5 1/2	2600		4159	

RECEIVED
JUL 19 1991
ARKANSAS OIL & GAS COMMISSION

AFFIDAVIT

I/we hereby swear (or affirm) that the statements herein made are a full and correct report.

Signed Early L. Tinnard

Subscribed and sworn to before me this 16th day of July, 1956

My commission expires April 26, 1958 Lasora Crenshaw
Notary Public

O'BRIEN OPERATING COMPANY
APPLICATION FOR SALTWATER DISPOSAL
JOHN PARNELL NO. 2
UNION COUNTY, ARKANSAS

O'BRIEN OPERATING COMPANY

JOHN PARNELL ET AL NO. 1
1980 FWL and 2324' FNL of SEC 13 T17S R16W
COTTON VALLEY COMPLETION PERFORATED 5721.5'-24'
TD 6800'
COMPLETED 11-14-89
8-5/8" Casing at 760' cemented with 375 sacks
5-1/2" Casing at 5800' cemented with 400 sacks
CURRENT STATUS: SHUTIN

O'BRIEN OPERATING COMPANY

JOHN PARNELL NO. 2
1000' FWL and 2000' FNL of SEC 13 T17S R16W
COTTON VALLEY COMPLETION PERFORATED 5533'-42'
TD 6001'
COMPLETED 10-26-90
8-5/8" Casing at 762' cemented with 350 sacks
5-1/2" Casing at 5730' cemented with 665 sacks
CURRENT STATUS: PRODUCING

KIN-ARK OIL COMPANY

HANEY NO. 1
CENTER NE1/4 SW1/4 SEC 13 T17S R16W
SMACKOVER COMPLETION PERFORATED 6708'-11'
TD 6763'
COMPLETED 4-7-56
9-5/8" Casing at 828' cemented with 250 sacks
5-1/2" Casing at 6759' cemented with 250 sacks
CURRENT STATUS: Permanently Abandoned
Cement Plug 6720'-6655'
2600' 5-1/2" Casing Pulled

R.E. WILLIAMS

PARNELL NO. 1
CENTER SW1/4 NE1/4 SEC 13 T17S R16W
DRILLED and ABANDONED
TD 6749'
ABANDONED AS DRY HOLE 9-18-62
8-5/8" Casing at 987' cemented with 350 sacks

RECEIVED
JUL 19 1991
ARKANSAS OIL & GAS COMMISSION

RECEIVED

JUL 0 8 1991

NEWS-TIMES PUBLISHING CO.
EL DORADO, ARK.

Affidavit For Proof of Publication

NO. 4228

STATE OF ARKANSAS
COUNTY OF UNION } ss.

I, Betty Pattings, do swear that I am Director of Advertising of the El Dorado News Times a daily newspaper printed and published in Union County, State of Arkansas, having a bonafide circulation in said county, and authorized by law to publish advertisements, and that the

Notice of Application was published in said newspaper 1 day consecutive ~~XXX~~ weeks, the first insertion being on the 2nd day of July, and the last insertion being on the

day of , 19 91.

Betty Pattings

Subscribed and sworn to before me this the 2nd day of July, 19 91

Melanie Jean Odom
Notary Public Circuit Clerk

My Commission Expires 2-22-92

RECEIVED

JUL 19 1991

ARKANSAS OIL & GAS COMMISSION

NOTICE OF APPLICATION FOR SALT WATER DISPOSAL/ENHANCED RECOVERY WELL PERMIT

O'Brien Operating Company, Post Office Box 6020, [illegible] 71113, 6020 [illegible] Oil and Gas Commission [illegible] permission to operate a Class [illegible] Enhanced Recovery Well by [illegible] injection into a formation known to be productive of oil or gas. The applicant proposes to dispose of salt water into the Cotton Valley Formation at a depth of 4570'-4640' feet in the O'Brien Operating Co. John Ramell, et al Well No. 2 located 2000' from the North line and 1000' from the West line of Section 13, Township 17 South, Range 16 West, in Agnes Road North Field, Union County, Arkansas.

Requests for a public hearing from persons who can show they are adversely affected or requests for information concerning this application should be submitted in writing to the Director of Underground Injection Control, Arkansas Oil and Gas Commission, P.O. Box 1472, El Dorado, Arkansas 71731-1472.

10M--2-56—130981—C.-McB.

AOGC-3-(56)

STATE OF ARKANSAS
OIL AND GAS COMMISSION
El Dorado, Arkansas

Well Completion and Recompletion Report

(Instructions: See Reverse Side)

Notice: This form must be completed and filed prior to allowable being granted

WELL DESCRIPTION

Field East Lisbon Producer Kin-Ark Oil Company

Pool Completed In Smackover Lime

Lease Name Haney No. 1 Address: Street 411 North Murphy

Exact Location Center NE¼ SW¼

City El Dorado

Sec. 13 Twp. 17S Rge. 16W

County Union State Ark.

Date Commenced 2-24-56

Date Completed 4-7-56

Elevation 240

Total Depth Drilled 6763'

Electric Log Run: Yes X No

Electric Log Filed: Yes X No

CASING, TUBING, PERFORATING AND COMPLETION PROGRAM USED IN WELL

Conductor: (Size & Wt.) set at ft. w/ sks.

Surface: (Size & Wt.) 821' - 9 5/8 - 36# set at 828 ft. w/ 250 sks.

Intermediate: (Size & Wt.) set at ft. w/ sks.

Production: (Size & Wt.) 6759' - 5½ - 15.50# set at 6759 ft. w/ 250 sks.

Tubing: (Size & Wt.) 2" - 4.60# set at 6710 ft.

Perforations: Size Jet No. Per Foot 5

Perforated Intervals: 6708-6711

Acidized: Yes No ; Interval w/ gals.

Fractured: Yes No ; Interval w/ lbs.

of sand; bbls. of oil.

LEASE DATA

1. Number of wells located on this lease, including this well One
2. Tank battery to which this well is connected: Existing yes New yes
3. Liquid production from this well is sold to ((Address
4. Disposition of gas from this well: Vented Fuel X Sold
   If sold, to whom
   Address

PRODUCTION DATA

Date of Test 5-2-56 Actual Length of Time Tested 24 hrs.

Type Well: Flowing Gas Lift Pump X.

Tubing Pressure Casing Pressure Choke Size

Net Oil Produced 33 bbls. Gas Produced MCF % BSW 130 GOR

Gravity Oil 30 BHP Recorded

Net Oil in 24 Hours 33 Open Flow Potential MCF

Purpose of this test: Original Completion X Workover Recompletion

Allowable Requested all well can pump

REMARKS: PLAN TO DIESEL OIL SQUEEZE AS SOON SUFFICIENT OIL IS PRODUCED FOR JOB.

Please use reverse side of this page for all pertinent remarks.

RECEIVED JUL 19 1991 ARKANSAS OIL & GAS COMMISSION

CERTIFICATE

I declare under the penalties of perjury that this report has been examined by me and to the best of my knowledge is true, correct and complete.

Early L. Kincaid

ARKANSAS
OIL AND GAS
COMMISSION

2215 West Hillsboro St. ■ P.O. Box 1472
El Dorado, Arkansas 71731-1472

William E. Wright
Director

Phone: (501) 862-4965
FAX Number: (501) 862-8823

November 7, 1995

John C. Rogers
434 S. Bradley
El Dorado, AR 71730

Re: John Parnell #2 SWD
Sec. 13-17S-16W
Agnes Road North Field
Union County, AR

Dear Sir:

Enclosed is the list of wells currently authorized to dispose of produced salt water into the above referenced SWD well, as per your revised application. Also the new daily disposal rate for the above referenced SWD well is 400 BSWPD.

Sincerely,

Gary D. Looney

Gary Looney
Oil & Gas Technician/UIC

GL:gm

cc: DPC&E

COMMISSION MEMBERS ■ E. Boyd Alderson, Chairman, El Dorado
Ned R. Price, Vice Chairman, Smackover ■ Spence A. Leamons, Fort Smith
J. David Reynolds III, Camden ■ Chris Weiser, Magnolia ■ Kent Dollar, Russellville
Phillip E. Norvell, Fayetteville ■ Robert C. Nolan, El Dorado ■ Chad White, Magnolia

An equal opportunity employer

GEOLOGY WORKSHEET FOR SWD APPLICATION

DATE July 19, 1991

OPERATOR O'Brien Operating Co.

WELL NAME John Parnell #2

LOCATION 1000' FWL & 2000' FNL SEC 13 TWP 17s RGN 16w

FIELD Agnes Road North

INJECTION ZONE Cotton Valley inj. zone only TOP 4570 BASE 4650 THICKNESS 80'

IS INJECTION ZONE CORRECT? (X)Y ( )N

DOES WELL TOTALY PENETRATE PROPOSED ZONE? (X)Y ( )N

DEEPEST FORMATION CONTAINING LESS THAN 10,000 mg/l TDS

(X) CANE RIVER
( ) WILCOX
( ) NACATOCH

TOP cased BASE 1000

IS PERMIT CORRECTLY FILED UNDER C-7 (X)Y ( )N C-8 ( )Y ( )N

COMMENTS:

OK

309

ARKANSAS DEPARTMENT OF POLLUTION CONTROL
AND ECOLOGY

GENERAL ROUTE SLIP

ORIGIN D. Ogden DATE SENT 11-01-95

RETURN TO _____ RETURN BY _____

TO: Gary Looney

Change of Operator from O'Brien Operating Co. to John C. Rogers and an increase in the Amount of produced Water to be injected.

RECEIVED
ARK. OIL & GAS COMM.
95 NOV -2 AM 10:25

2915

NOTICE OF INTENT

RECEIVED

OCT 26 1995

Return to:

Arkansas Dept. of
Pollution Control &
Ecology
P.O. Box 1644
El Dorado, AR 71730

SUBJECT: Notice of Intent (NOI) for Coverage Under General Permit G-0000-W-SWD for Construction/operation of a Salt Water Disposal System (Injection)

1. ADPCE is hereby notified that the following facility desires coverage under general permit G-0000-W-SWD for construction and/or operation of the surface facilities at a Salt Water Disposal System. As required by the general permit, the following information is submitted:

a. Previous permit or NOI tracking number, if applicable:

Previous Individual State Water Permit No. 4083-W R-1

Previous NOI tracking number _____-WG-SW (not applicable if applying for initial coverage under this general permit)

b. Facility owners name, address, and telephone number:

JOHN C. Rogers
434 S. Bradley
ElDorado, AR. 71730
(501) 863-8861

RECEIVED
ARK. OIL & GAS COMM.
95 NOV -2 AM 10:25

c. Operator's name, address, and telephone number, if different from owner:

_____

_____

_____

( ) _____

d. Facility name and location. (Location should be described in Latitude and Longitude to the nearest 15 seconds, or alternatively, provide the legal description in Section, Range, and Township):

Name of Facility: _____

Latitude: ___ deg. ___ ' ___ " North

Longitude: ___ deg. ___ ' ___ " West

or

Section ___ Township ___ Range ___

Spot ___ /4 ___ /4 Field: Agnes Road North Field

Nearest City/Town ElDorado County Union

e. Provide a list below of all wells from which salt water is received for disposal, including estimated volumes (in barrels per day) from each:

Well Identification		Volumes
Operator	Lease/Well Name	
John C. Rogers	Parnell #1	400 BPD

(Use additional sheets as necessary)

f. Provide salt water storage tank capacity (in barrels) at each transfer and disposal site:

Name of Site	Storage Capacity
Parnell #1 Lease Location for Both	1-400 Barrel Tank 1-350 Barrel Tank

(Use additional sheets, if required)

g. Provide the above ground storage capacity (in barrels) at the injection site:

750 barrels

h. Projected (or actual) disposal rate (barrels per day):

400 barrels per day

i. Provide the injection formation(s) and intervals (this information is being requested for informational purposes only):

Formation Name	Intervals

(Use additional sheets, if necessary)

j. Is a copy of the AO&GC Letter of Authorization to construct and/or operate the SWD enclosed with this NOI?

____ Yes ✓ No

k. Has the owner/operator previously submitted, or have on file with the Department, a complete "Disclosure Statement" as required by Act 454 of 1991?

Yes X Date Submitted 10-12-95 Division _____

No _____

If the answer is "No", a non-exempted owner/operator must complete and submit the "Disclosure Statement" included with this NOI. Additional copies of the Disclosure Form may be obtained from ADPCE.

l. Is this applicant a corporation? ____ Yes X No

If "Yes", the owner/operator, by signature in Section 3 below, certifies that the corporation is registered with the Secretary of State of Arkansas.

m. Is this facility a new or proposed facility?

____ Yes X No

If "Yes", the applicant must also submit the following additional documents for ADPCE review:

(1) A schematic diagram of the proposed disposal system, including:

(i) connected wells
(ii) tanks (type and sizes)
(iii) treaters, gunbarrels, separators;
(iv) pumps
(v) cut-off switches
(vi) emergency storage (firewalls) dimensions
(vii) piping (sizes and materials)

(2) A topographic map or county highway map describing and/or illustrating the location of the disposal system.

RECEIVED
95 NOV -2 AM 10 25

n. For modifications to existing facilities, briefly describe the changes being requested (i.e., install 2 storage tanks, close out reserve pit, etc.)

NONE

2. Cognizant Official (Duly Authorized Representative)

a. All reports required by the permit, or other information requested by the Director, shall be signed by the applicant (or person authorized by the applicant) or by a duly authorized representative of that person. A person is a duly authorized representative only if:

(1) the authorization is made in writing by the applicant (or person authorized by the applicant);

(2) the authorization specifies either an individual or a position having responsibility for the overall operation of the regulated facility or activity such as the position of plant manager, superintendent, position of equal responsibility, or an individual or position having overall responsibility for environmental matters for the company.

(3) the authorization is submitted to the Director.

b. The applicant hereby designates the following person as cognizant official, or duly authorized representative, for signing reports required by the permit, and other information requested by the Director:

JOHN ROGERS — Name

OWNER/OPERATOR — Title

By signature in Section 3 below, the applicant certifies that the above named individual is qualified to act as a duly authorized representative. (NOTE: If no duly authorized representative is designated herein, the Department considers the applicant to be the cognizant official for the facility and only reports signed by the applicant will be accepted by the Department)

3. Certification and Signatory Requirements:

a. Signature on Application (Notice of Intent): The application or Notice of Intent must be signed below by a person authorized under the provisions of state law. Applicants should be familiar with the provisions regarding signatory authority which are included in the general permit in Section II.D.8.

b. Certification: The applicant and any person signing a document required under this permit must make the following certification:

" I certify under penalty of law that this document and all attachments were prepared under my direction or supervision in accordance with a system designed to assure that qualified personnel properly gather and evaluate the information submitted. Based on my inquiry of the person or persons who manage the system, or those persons directly responsible for gathering the information, the information submitted is, to the best of my knowledge and belief, true, accurate, and complete. I am aware that there are significant penalties for submitting false information, including the possibility of fine and imprisonment for knowing violations."

JOHN C. ROGERS — Typed or Printed Name

OWNER/OPERATOR — Title

John C. Rogers — Signature

10-17-95 — Date Signed

ARKANSAS OIL AND GAS COMMISSION
P. O. BOX 1472 2215 WEST HILLSBORO
EL DORADO, AR 71731-1472

INJECTION WELL INSPECTION

OPERATOR John C. Rogers / MOOC DATE 10-7 - 2002

LEASE John Parnell WELL NO. 2 FIELD Agnes Rd North

COUNTY Union SEC. 13 TWP 17 RGE 16

LOCATION

DIRECTIONS TO WELL

ANNULUS MONITOR INSPECTION

STATUS: SHUT IN _____ TUBING PRESSURE _____ psig/vacuum _____ in

OPERATING _____ ANNULUS PRESSURE _____ psig/vacuum _____ in

TIME OBSERVED _____ A.M./P.M.

RESULTS

WELL PRESSURE TEST

STATUS: SHUT IN X

OPERATING _____

TIME HOUR	TIME MINUTES	CASING ANNULUS PSIG
2	45	440
3	15	420

PACKER DEPTH _____

REMARKS: 5.9 BBLs to Fill up

RESULTS OF TEST

X WELL MECHANICAL INTEGRITY SATISFACTORY

_____ WELL MECHANICAL INTEGRITY NOT VERIFIED

_____ CASING ANNULUS NOT HOLDING PRESSURE FOR TEST PERIOD

_____ RESCHEDULE TEST FOR DATE OF

_____ WELL SHOULD BE REPAIRED AND RETESTED

_____ WELL SHOULD BE SHUT IN

Kenny Shelton
~~OPERATOR REPRESENTATIVE~~
WITNESS

St Sunbl
INSPECTOR

ARKANSAS OIL AND GAS COMMISSION
P. O. BOX 1472 2215 WEST HILLSBORO
EL DORADO, AR 71731-1472

INJECTION WELL INSPECTION

OPERATOR John C. Rogers / MOGC DATE 10-7 - 2002

LEASE John Parnell WELL NO. 2 FIELD Agnes Rd North

COUNTY Union SEC. 13 TWP 17 RGE 16

LOCATION

DIRECTIONS TO WELL

ANNULUS MONITOR INSPECTION

STATUS: SHUT IN _____ TUBING PRESSURE _____ psig/vacuum _____ in

OPERATING _____ ANNULUS PRESSURE _____ psig/vacuum _____ in

TIME OBSERVED _____ A.M./P.M.

RESULTS

WELL PRESSURE TEST

STATUS: SHUT IN X

OPERATING _____

TIME HOUR	TIME MINUTES	CASING ANNULUS PSIG
2	45	440
3	15	420

PACKER DEPTH _____

REMARKS: 5.9 BBLs to Fill up

RESULTS OF TEST

X WELL MECHANICAL INTEGRITY SATISFACTORY

_____ WELL MECHANICAL INTEGRITY NOT VERIFIED

_____ CASING ANNULUS NOT HOLDING PRESSURE FOR TEST PERIOD

_____ RESCHEDULE TEST FOR DATE OF _____

_____ WELL SHOULD BE REPAIRED AND RETESTED

_____ WELL SHOULD BE SHUT IN

Kenny D Sutton
OPERATOR REPRESENTATIVE
Witness

St Stubb
INSPECTOR

UI-2
(REV. 96)

ARKANSAS OIL AND GAS COMMISSION

P. O. BOX 1472 2215 WEST HILLSBORO
EL DORADO, AR 71731-1472

INJECTION WELL INSPECTION

OPERATOR John C. Rogers DATE Dec 13 1996

LEASE John Parnell WELL NO. 2 FIELD Agnes Road North

COUNTY Union SEC. 13 TWP 17 RGE 16

LOCATION _____

DIRECTIONS TO WELL _____

ANNULUS MONITOR INSPECTION

STATUS: SHUT IN _____ TUBING PRESSURE _____ psig/vacuum _____ in.

OPERATING _____ ANNULUS PRESSURE _____ psig/vacuum _____ in.

TIME OBSERVED _____ A.M./P.M.

RESULTS _____

WELL PRESSURE TEST

STATUS: SHUT IN X

OPERATING _____

TIME HOUR	TIME MINUTES	CASING ANNULUS PSIG
1	08	460
1	38	480

REMARKS: _____

RESULTS OF TEST

X WELL MECHANICAL INTEGRITY SATISFACTORY

_____ WELL MECHANICAL INTEGRITY NOT VERIFIED

_____ CASING ANNULUS NOT HOLDING PRESSURE FOR TEST PERIOD

_____ RESCHEDULE TEST FOR DATE OF _____

_____ WELL SHOULD BE REPAIRED AND RETESTED

_____ WELL SHOULD BE SHUT IN

John Rogers — OPERATOR REPRESENTATIVE

Gary Lowery — INSPECTOR

ORIGINAL - COMMISSION WELL FILE COPY 1 - OPERATOR COPY 2 - INSPECTOR RECORDS

ARKANSAS OIL AND GAS COMMISSION
314 EAST OAK STREET
EL DORADO, ARKANSAS 71730

INJECTION WELL INSPECTION

Date Nov. 5 19 91

OPERATOR O'Brien Operating Company

FIELD Agnes Road North COUNTY Union

LEASE John Parnell WELL NUMBER 2

LOCATION _____ SEC. 13 T 17s R 16w

DIRECTIONS TO WELL _____

WELL PRESSURE TEST

SHUT IN (X) NUMBER OF HOURS _____

OPERATING (____) TUBING PRESSURE _____ PSIG/VACUUM _____ INCHES

ANNULUS PRESSURE _____ PSIG/VACUUM _____ INCHES

PRESSURE TEST:

TIME Hour	TIME Minutes	CASING ANNULUS psig	REMARKS
1	15	418	
1	45	406	

ANNULUS MONITOR INSPECTION

STATUS: Shut In (____) Tubing Pressure _____ psig/vacuum _____ inches.

Operating (____) Annulus Pressure _____ psig/vacuum _____ inches.

Time Observed _____ A.M./P.M.

RESULTS OF TEST (Indicate with X)

X well mechanical integrity satisfactory

____ well mechanical integrity not verified

____ casing annulus not holding pressure for test period

____ annulus pressure monitored not in agreement with monitored pressures reported by operator

____ _____

____ reschedule test for date of _____

____ well should be repaired and retested

____ well should be shut in

____ _____

WITNESS J. D. Mess INSPECTOR Gary Foong

for _____ for _____

Original - Commission Well File
Copy 1 - Operator
Copy 2 - Inspector Records

PROCEDURES AND REQUIREMENTS FOR SURFACE CASING AND THE PLUGGING OF WELLS

You are REQUIRED to set a minimum of 750 feet of surface casing on the well listed below to comply with the Minumum Casing Requirements adopted by the Arkansas Oil and Gas Commission.

O'Brien Operating Co. — OPERATOR

John Parnell #2 — LEASE AND WELL NO.

If you anticipate the need to pump the reserve pit down the well bore you should set a minimum of 1703 feet of surface casing. Permission must be obtained from a Commission engineer prior to the commencement of pumping operations.

Surface casing will be cemented to the surface of the earth. ALL cementing will be done by the pump and plug method.

You are REQUIRED to notify the Commission in ample time for an engineer of the Commission to be present to witness the running and cementing of the casing.

In the event that the well is to be abandoned, the Commission must be notified of same in ample time for an engineer of the Commission to be present to witness the plugging of the well. ALL wells will be plugged in accordance with Rules B-7 & B-8 of the General Rules and Regulations.

The Commission engineer for your area is Dennis Endel

ENGINEERS	AREA COUNTIES	HOME PHONE
Kirk Hudson	Hempstead, Lafayette, & Miller	863-0134
Steve Saulsbury	Columbia, Nevada, & Ouachita	862-6496
Dennis Endel	Ashley, Bradley, Calhoun, & Union	862-8434

In the event that the engineer of your area cannot be contacted, contact the office of the ARKANSAS OIL AND GAS COMMISSION, 2215 West Hillsboro, P.O. Box 1472, El Dorado, Arkansas 71731-1472. PHONE (501) 862-4965 between the hours of 8:00 A.M. to 5:00 P.M., Monday through Friday.

Gary Looney	UIC Engineering Technician	862-7848
Marty Perdue	Petroleum Engineer	863-4456
Hampton Bussey	Petroleum Engineer Supervisor	693-5757
W.E. "Bill" Wright	Director	863-8784

ARKANSAS OIL AND GAS COMMISSION

Director's Office:
301 Natural Resources Drive
Suite 102
Little Rock, AR 72205
Phone: (501) 683-5814
Fax: (501) 683-5818
http://www.aogc.state.ar.us

Asa Hutchinson
Governor

Lawrence Bengal
Director

El Dorado Regional Office:
2215 West Hillsboro
El Dorado, AR 71730
Phone: (870) 862-4965
FAX: (870) 862-8823

Fort Smith Regional Office:
3309 Phoenix Avenue
Fort Smith, AR 72903
Phone: (479) 646-6611
FAX: (479) 649-7656

PN 34337

May 10, 2018

Crude Oil LLC
270 Meadow Hills
El Dorado, AR 71730

Re: John Parnell #2
Sec. 13–17S–16W
Agnes Road North Field

Dear Mr. Rogers,

Our records indicate that the above reference well was last permitted to operate as a Class II UIC well. However our records further indicate that a MIT (pressure) test, UIC well fee and the monthly reporting have not been maintained or filed as required for UIC wells. Please review your records and if you believe this is in error, please contact us promptly. Otherwise, you should determine whether the well has future utility and if so conduct the necessary work and apply and receive any necessary permits within sixty (60) days. If you have no intention to operate this well, please proceed with the proper well plugging activity within the next sixty (60) days.

Again, please review your records to ensure the accuracy of our records and findings. Please inform this office within thirty (30) days of your decision for the disposition of the referenced well. If you have any questions regarding this letter, please contact me at your earliest convenience.

Sincerely,

Gary D. Looney

Gary D. Looney
Assistant Director
El Dorado Regional Office

COMMISSION MEMBERS
W. Frank Morledge, Chairman, Forrest City
William L. Dawkins, Jr., Vice-Chairman, Fort Smith
Jerry Langley, Smackover • Chris Weiser, Magnolia
Jim Phillips, Smackover • Tim Smith, Fort Smith
Charles Wohlford, Fort Smith • Thomas McWilliams, Magnolia
Mark Thomas, Magnolia

An equal opportunity employer

SCANNED
MAY 11 2018

BancorpSouth®

April 25, 2008

Arkansas Oil & Gas Commission
El Dorado, Ar. 71730

To Whomever It May Concern:

I, David Skinner, representing BancorpSouth Bank, sold equipment associated with the Parnell lease, wells #1 & #2, to Mr. Jim Phillips and Mr. Mickey Berg somewhere around the years of 2000 – 2002.

Sincerely,
David Skinner

P.O. Box 751 • El Dorado, AR 71731-0751 • 870-863-3181

Prepared by:
Steve Rogers
270 Meadow Hills
El Dorado, Arkansas 71730

2008 3177
Recorded in the Above
Deed Book & Page
04-02-2008 09:17:59 AM
Cheryl Cochran-Wilson Circ Clerk
Union County, AR
Book/Pg: 2008/3177
Term/Cashier: UCCC-E2 / LHINSON
Tran: 3943.124108.148577
Recorded: 04-02-2008 09:18:42
DFE Deed 25.00
REC Recording Fee 0.00
Total Fees: $ 25.00

OIL AND GAS LEASE
(PAID UP)

THIS AGREEMENT is made and entered into this 20th day of February, 2008, between:

MONICA KING, INDIVIDUALLY, AND AS AGENT AND ATTORNEY IN FACT FOR LOUIS PARNELL KING,
wife and husband
301 Wintergreen Court, Weatherford TX 76085 hereinafter called Lessor (whether one or more), and
STEVE ROGERS, 270 Meadow Hills, El Dorado, Arkansas, 71730, hereinafter called **Lessee**.

WITNESSETH: That the said Lessor, for and in consideration of ten and other valuable considerations ($10.00 OVC) DOLLARS cash in hand paid, the receipt of which is hereby acknowledged, and of the covenants and agreements hereinafter contained on the part of Lessee to be paid, kept, and performed, has GRANTED, DEMISED, LEASED and LET, and by these presents does GRANT, DEMISE, LEASE and LET unto the said Lessee, for the sole and only purpose of exploring by geophysical and other methods, mining and operating for oil (including but not limited to distillate and condensate), gas (including casinghead gas and helium and all other constituents), and for laying pipelines and building tanks, powers, stations, and structures thereon, to produce, save, and take care of said products, all that certain tract of land, together with any reversionary rights therein, situated in the State of Arkansas, and described as follows, to-_wit:

County Union **Section** 13 **Township** 17 South **Range** 16 West

SECTION 13: The East Half of the Northwest Quarter, 80 acres, and
The Southwest Quarter of the Northwest Quarter, 40 acres, and
The North Half of the Northwest Quarter of the Northwest Quarter, 20 acres.

and containing 140.0 acres, more or less. In addition to the land above described, Lessor hereby grants, leases, and lets exclusively unto Lessee, to the same extent as if specifically described herein, all lands owned or claimed by Lessor which are adjacent, contiguous to, or form a part of the lands above particularly described, including all oil, gas, and their constituents underlying lakes, rivers, streams, roads, easements and rights-of-way which traverse or adjoin any of said lands.

1. It is agreed that this lease shall remain in force for a term of THREE (3) years from date (herein called *primary term*) and as long thereafter as oil or gas, or either of them, is produced from said land by the Lessee, and as long thereafter as operations, as hereinafter defined, are conducted upon said land with no cessation for more than ninety (90) consecutive days. Whenever used in this lease the word "operations" shall mean operations for and any of the following: drilling, testing, completing, reworking, recompleting, deepening, plugging back or repairing of a well in search of or in an endeavor to obtain production of oil, gas, or other minerals, or production of oil, gas, or other minerals, whether or not in paying quantities. If while this lease is in force, at, or after the expiration of the primary term hereof, it is not being continued in force by reason of the shut-in well provisions hereinafter stated, and Lessee is not conducting operations on said land by reason of (1) any law, order, rule, or regulation (whether or not subsequently determined to be invalid), or (2) any other cause, whether similar or dissimilar, (except financial) beyond the reasonable control of Lessee, the primary term hereof shall be extended until the first anniversary date hereof occurring ninety (90) or more days following the removal of such delaying cause, and this lease may be extended thereafter by operations as if such delay had not occurred.

2. In consideration of the premises, the said Lessee covenants and agrees:
   A. To deliver to the credit of Lessor the one-eighth (1/8) part of all oil (including but not limited to condensate and distillate) produced and saved from the leased premises;
   B. To pay Lessor for gas of whatsoever nature or kind (with all of its constituents) produced and sold or used off the leased premises, or used in the manufacture of products therefrom, one-eighth (1/8) of the proceeds received for the gas sold, used off the premises, or in the manufacture of products therefrom, but in no event more than one-eighth (1/8) of the actual amount received by the Lessee, said payments to be made monthly;
   C. To pay Lessor for gas produced from any oil well and used off the premises, or for the manufacture of casinghead gasoline or dry commercial gas, one-eighth (1/8) of the proceeds, at the mouth of the well, received by Lessee for the gas during the time such gas shall be used, said payments to be made monthly;
   D. Lessee is authorized to deduct from such proceeds the cost incurred in compressing, treating, dehydrating, marketing and transporting such oil, gas and/or casinghead gas for delivery in computing the proceeds at the well payable as royalty; and
   E. That all royalties, shut-in royalties, or other sums which may become payable to Lessor under the terms of this lease may be paid or tendered by cash, check, draft, electronic funds transfer, or any other commercially reasonable method, which Lessee may elect from time to time.

3. If, at the expiration of the primary term or at any such time or times thereafter, there is any well on said land or on lands with which such land or any portion thereof has been pooled, capable of producing oil or gas, and all such wells are shut-in, this lease shall, nevertheless, continue in force as though operations were being conducted on said land for so long as said wells are shut-in, and thereafter this lease may be continued in force as if no shut-in had occurred. Lessee shall

not be obligated to install or furnish facilities other than well facilities and the ordinary lease facilities of flow lines, separator, and lease tank, and shall not be required to settle labor trouble or to market gas upon terms unacceptable to Lessee. If, at any time or times after the expiration of the primary term all such wells are shut-in for a period of ninety consecutive days, and during such time there are no operations on said land, then at or before the expiration of said ninety day period, Lessee shall pay or tender as royalty, a sum equal to one dollar ($1.00) per year per net royalty acre covered hereby. Lessee shall make like payments or tenders on or before the end of each anniversary of the expiration of said ninety day period if upon such anniversary this lease is being continued in force solely by reason of the provisions of this paragraph.

4. Lessee is hereby granted the right at any time and from time to time to unitize the leased premises or any portion or portions thereof, as to all strata or any stratum or strata, with any other lands, as to all strata or any stratum or strata, for the production primarily of oil or primarily of gas with or without distillate. However, no unit for the production primarily of oil shall embrace more than 160 acres, or for the production primarily of gas, with or without distillate, more than 640 acres; provided that if any governmental regulation shall prescribe a spacing pattern for the development of the field or allocate a producing allowable based on acreage per well, then any such unit may embrace as much additional acreage as may be so prescribed or as may be used in such allocation of allowable. Operations upon and production from the unit shall be treated as if such operations were upon or such production was from the leased premises whether or not the well or wells are located thereon. The entire acreage within a unit shall be treated for all purposes as if it were covered by and included in this lease except that the royalty on production from the unit shall be as below provided, and except that in calculating the amount of any shut-in gas royalties only that part of the acreage originally leased and then actually embraced by this lease shall be counted. In respect to production from the unit, Lessee shall pay Lessor, in lieu of other royalties thereon, only such proportion of the royalties stipulated herein as the amount of his acreage placed in the unit, or his royalty interest therein on an acreage basis bears to the total acreage in the unit. Lessee shall file written unit designations in the county in which the leased premises are located. Notwithstanding the limitation that a production unit for oil cannot exceed 160 acres, or a production unit for gas cannot exceed 640 acres, Lessee, as the agent for Lessor, is granted the right to execute all necessary ratifications of any unit agreement and/or unit operating agreements as may be necessary to obtain the approval of the Arkansas Oil & Gas Commission for the creation of a field-wide unit without regard to the size of such field-wide unit.

5. If said Lessor owns a less interest in the above described land than the entire and undivided fee simple estate therein, then the royalties herein provided shall be paid to the Lessor only in the proportion which his interest bears to the whole and undivided fee.

6. Lessee shall have the right to use, free from cost, gas, oil, and water produced on said land for its operations thereon, except water from wells of Lessor.

7. When requested by the Lessor, Lessee shall bury his pipelines below plow depth.

8. No well shall be drilled nearer than 200 feet to any house or barn now on said premises without the written consent of the Lessor.

9. Lessee shall pay for all damages caused by its operations inclusive of land, property and growing crops on said land.

10. Lessee shall have the right at any time to remove all machinery and fixtures placed on said premises, including the right to draw and remove casing.

11. If the estate of either party hereto is assigned, and the privilege of assigning in whole or in part is expressly allowed, the covenants hereof shall extend to their heirs, executors, administrators, successors, or assigns. However, no change or division in ownership of the land or royalties shall enlarge the obligations or diminish the rights of Lessee. No change in the ownership of the land or royalties shall be binding on the Lessee until after the Lessee has been furnished with a written transfer or assignment or a true copy thereof. In case Lessee assigns this lease, in whole or in part, Lessee shall be relieved of all obligations with respect to the assigned portion or portions arising subsequent to the date of assignment.

12. All express or implied covenants of this lease shall be subject to all Federal, State, and Municipal laws, Executive Orders, Rules, and Regulations, and this lease shall not be terminated in whole or in part, nor Lessee held liable in damages, for failure to comply therewith if compliance is prevented by or such failure is the result of any such Law, Order, Rule, or Regulation.

13. This lease shall be effective as to each Lessor on execution hereof as to his or her interest and shall be binding on those signing, notwithstanding some of the Lessors above named may not join in the execution hereof. The word Lessor as used in this lease means the party or parties who execute this lease as Lessor although not named above.

14. Lessee may at any time and from time to time surrender this lease as to any part or parts of the leased premises by delivering or mailing a release thereof to Lessor, or by placing a release of record in the proper County.

15. Lessor hereby warrants and agrees to defend the title to the lands herein described, and agrees that the Lessee shall have the right at any time to redeem for Lessor, by payment, any mortgages, taxes, or other liens on the above described lands, in the event of default of payment by Lessor, and be subrogated to the rights of the holder thereof.

16. Lessor hereby surrenders and releases all rights of dower and of courtesy and of homestead in the premises described herein, insofar as said rights of dower and of courtesy or of homestead may in any way affect the purposes for which this lease is made, as recited herein.

IN WITNESS WHEREOF we sign the day and year first above written.

Monica K. King

Monica King, Individually and As Agent and Attorney in Fact for Louis Parnell King

Soc. Sec. No._____

2008 3179
Recorded in the Above
Deed Book & Page
04-02-2008 09:17:59 AM
Cheryl Cochran-Wilson Circ Clerk
Union County, AR

STATE OF TEXAS §

COUNTY OF Parker §

ACKNOWLEDGMENT

BE IT REMEMBERED, that on this the 11 day of March, 2008, before me, a Notary Public duly commissioned and acting in and for said County and State appeared Monica King, to me well known as the Lessor in the foregoing instrument, and stated that she had executed the same for the purposes and consideration therein mentioned and set forth.

IN WITNESS WHEREOF, I have set my hand and seal as such Notary Public on the day and year first written above.

NOTARY PUBLIC STATE OF TEXAS
DAVID L. PAYNE
Notary Public
STATE OF TEXAS
My Comm. Exp. June 22, 2009

Notary Public
Notary's Commissions Expires: 6/22/09

Union County, AR
I certify this instrument was filed on
04-02-2008 09:17:59 AM
and recorded in Deed Book
2008 at pages 3177 - 3179
Cheryl Cochran-Wilson Circ Clerk
By: Linda Hinson

Att Frank Bordon

ARKANSAS
OIL AND GAS COMMISSION

William E. Wright
Director

2215 West Hillsboro St. ■ P.O. Box 1472
El Dorado, Arkansas 71731-1472

Phone: (870) 862-4965
FAX Number: (870) 862-8823
E-Mail: aogc@ipa.net

August 24, 1999

CERTIFIED RETURN
RECEIPT REQUESTED
Z 198 194 536

Mr. John C. Rogers
434 South Bradley
El Dorado, AR 71730

Re: John Parnell #2 SWD
Agnes Road North

Dear Mr. Rogers:

This letter is to inform you that the **"Authority to Dispose" has been cancelled** on the above referenced well(s) for failure to pay your annual assessment fees. These well(s) are to be shut-in immediately until all fees have been paid and remain shut-in until you are notified by this office that your "Authority to Dispose" has been reinstated.

Sincerely,

Gary D. Looney
UIC Director

GDL:gm

COMMISSION MEMBERS ■ Spence A. Leamons, Chairman, Fort Smith
Chris Weiser, Vice-Chairman, Magnolia ■ Chad White, Magnolia ■ Lowell Boynton, Fayetteville
W. Frank Morledge, Forrest City ■ Charles Wohlford, Fort Smith ■ Bill C. Poynter, Texarkana
Kenneth Karmel, Laneburg ■ Mike Davis, Camden

An equal opportunity employer

File

ARKANSAS
OIL AND GAS
COMMISSION

2215 West Hillsboro St. ■ P.O. Box 1472
El Dorado, Arkansas 71731-1472

William E. Wright
Director

Phone: (501) 862-4965
FAX Number: (501) 862-8823

September 30, 1993

O'Brien Operating Co.
P.O. Box 6020
Shreveport, LA 71136-6020

Re: Parnell Lease
Agnes Road North Field
Union County, AR

Dear Mr. O'Brien:

An inspection of the Parnell Lease was made on August 20, 1993. At that time it was noted that the packing in the saltwater pump leaked severely and was creating a mess on the location. I talked by phone with your pumper, Mr. John Rogers, and he assured me that a method of containment and some "dress-up" work would be constructed within the next two weeks. A follow-up inspection was conducted yesterday and the location was found in considerable worse shape. The packing is leaking worse. A siphon hose has allowed tank "run-over" out of the firewall and left water and oil in depressions on the location that has run off into nearby timber. It will be necessary to clean up the location and construct a containment method for the saltwater pump discharge. If the firewalls cannot be kept clean enough to drain strictly fresh rain water, then you will have to pick up the fluid and run it through the system. A follow-up inspection will be made within fifteen (15) days.

If you have any question, please advise.

Sincerely,

Gary Looney

Gary Looney
Oil & Gas Technician/UIC
GL:gm

COMMISSION MEMBERS ■ E. Boyd Alderson, Chairman, El Dorado
Ned R. Price, Vice Chairman, Smackover ■ Spence A. Leamons, Fort Smith
J. David Reynolds III, Camden ■ Chris Weiser, Magnolia ■ Kent Dollar, Russellville
Phillip E. Norvell, Fayetteville ■ Robert C. Nolan, El Dorado ■ Chad White, Magnolia

An equal opportunity employer

MAGNETIC SYSTEMS,® INC. • 405-235-1138 • pdr/PREFOLDED DUPLICATOR ROLL® • PATENT NO. 4,270,911 • DIGITAL

Williams #1 Parnell

Union County Arkansas Outpost-E. Lisbon Fld., 13-17S-16W

Well: R. E. Williams #1 Parnell Result: DGA

Loc'n: Sec 13-17S-16W, C SW NE, 1850' NE/abnd prod, 2 mi NW/El Dorado

Spud: 8-27-62 Comp: 9-18-62 Elev: 251' grd, 256' DF, 257' KB TD: 6749' C/R. E. Williams Drlg. Co.

Casing: 8 5/8" 987'/350 sx

Prod Zone: None

IP: None

Comp Info: Crd 6684-6709' (Buck), rec 26', 25' red sh & anhy, 1' dolomitic sh; Crd 6709-29' (Smk), rec 21', 4½' dolomitic sh, 13' ll, xln to ool, tltely cmtd, no PGP, NS, 1' ll, ool, tite, NS, 1' ll, ool, fair PGP w/gd oil stain & odor, 1' ll, ool, tltely cmtd, no PGP, ½' ll, ool, low PGP, sll odor, no visible stain; TD 6749', ran IEL to btm, no SWS or tests.

Tops: (Elec Log) Wx 1490', Nac 2220', Sara 2330', B/An 2506', Mealdn 2510', Graves 2678', 1st Blos 2822', Tokio 2951', L/Cret (Jas) 3074', Hogg Mkr 3238', CV 4628', Buck 6620', Smk 6710', por 6719'

13996

Date: 9-21-62 Card No.: 7 Ark.

RECEIVED
JUL 19 1991
ARKANSAS OIL & GAS COMMISSION

O'BRIEN OPERATING COMPANY

November 5, 1990

Arkansas Oil and Gas Commission
P.O. Box 1472
El Dorado, AR 71731-1472

Re: John Parnell etal #2
Sec. 13-17S-16W
Union County, Arkansas

Gentlemen:

Enclosed please find the following material relative to the referenced well:

1. Producers Certificate of Compliance & Authorization to Transport Oil or Gas

2. Well Completion and Recompletion Report

3. Cement Bond Log

4. Dual Induction-FDC-CNL-GR Log

O'Brien Operating Company respectfully request that the logs included be held confidential for 90 days.

We hope that you find everything in order and if you have any questions, please advise.

Very truly yours,

O'BRIEN OPERATING COMPANY

J. R. Gordon
Production Manager

JRG/jlw
Enclosures

RECEIVED
NOV 6 1990
ARKANSAS OIL & GAS C

MAILING ADDRESS: P. O. BOX 6020 • SHREVEPORT, LA. 71136-6020 TELEPHONE: (318) 869-3247
STREET ADDRESS: 5925 LINE AVENUE • SHREVEPORT, LA. 71106 FACSIMILE: (318) 868-9835

ARKANSAS OIL AND GAS COMMISSION

Director's Office:
301 Natural Resources Drive
Suite 102
Little Rock, AR 72205
Phone: (501) 683-5814
Fax: (501) 683-5818
http://www.aogc.state.ar.us

Mike Beebe
Governor

Lawrence Bengal
Director

El Dorado Regional Office:
2215 West Hillsboro
El Dorado, AR 71730
Phone: (870) 862-4965
FAX: (870) 862-8823

Fort Smith Regional Office:
3309 Phoenix Avenue
Fort Smith, AR 72903
Phone: (479) 646-6611
FAX: (479) 649-7656

September 23, 2008

Steve Rogers
Crude Oil, LLC
270 Meadow Hills
El Dorado, AR 71730

RE: Severance Tax Exemption Request
Parnell, John 2
Sec. 13-17S-16W
Agnes Road North Field
Union County, AR

Dear Mr. Rogers;

Our office received a letter requesting Severance Tax Exemption for the above mentioned well(s). Please resubmit your request using and AOGC Form 30. This form can be found on our website at www.aogc.state.ar.us.

Sincerely,

Sunshine Perry

Sunshine Perry
Arkansas Oil and Gas Commission
El Dorado Regional Office

COMMISSION MEMBERS
Chad White, Chairman, Magnolia
W. Frank Morledge, Vice-Chairman, Forrest City
Charles Wohlford, Fort Smith ▪ Bill Poynter, Texarkana
Mike Davis, Magnolia ▪ Kenneth Williams, Jersey
Carolyn Pollan, Fort Smith ▪ William L. Dawkins, Jr., Fort Smith
Jerry Langley, Smackover

An equal opportunity employer

ARK OIL & GAS COMM

Steve Rogers
270 Meadowdale Dr.
El Dorado, AR 71730

2008 SEP 22 AM 9 23

September 19, 2008

Dear Mr. Looney,

I am in the process of putting four wells back into production in Union Co. AR. These wells have not produced in 7 to 20 years. Crude Oil LLC would like to ask for severance tax exemption benefits by Authority of Arkansas Act 1093 of 1995 for the following wells:

swd Agnes Rd N.

Crude Oil John Parnell	Parnell #1	Sec. 13	TWP 175	RGE 16W
PN: 34337	Parnell #2	Sec. 13	TWP 175	RGE 16W
	Brewster #1	Sec. 23	TWP 175	RGE 16W
	Debo #1	Sec. 10	TWP 175	RGE 14W

Thank you,

Steve Rogers

Steve Rogers

ARKANSAS OIL AND GAS COMMISSION
2215 WEST HILLSBORO
P. O. BOX 1472
EL DORADO, ARKANSAS 71731-1472

ORDER NO. 513A-2007-07 **November 02, 2007**

AGNES ROAD NORTH FIELD
Union County, Arkansas

WELL ABANDONMENT

After due notice, followed by a public hearing held in El Dorado, Arkansas, on October 23, 2007, the Arkansas Oil and Gas Commission has, following said hearing, found the following facts and ordered the following wells abandoned.

FINDINGS OF FACT

From the evidence introduced at said hearing, the Commission finds:

1. The wells located in Section 13, Township 17 South, Range 16 West, in the Agnes Road North Field, Union County, which are the subject of the Order below, are the:

   a. Parnell, John, Et Al #1
   b. Parnell, John #2.

2. That the last operator of record for the well enumerated in Finding 1 above, is John C. Rogers.

3. That the last production from any of the wells enumerated in Finding No. 1 above was in excess of twenty-four months ago.

4. That the last known address for John C. Rogers, as listed on the Arkansas Oil and Gas Commission Forms 1 is 511 N. College Ave., El Dorado, Arkansas 71730.

5. That notice of this hearing was sent to John C. Rogers by first class mail.

6. That notice was published in newspapers of general circulation in Union County.

7. That John C. Rogers did not present himself at the hearing.

8. That the wells enumerated in Finding 1 have been abandoned by their operator, John C. Rogers.

CONCLUSIONS OF LAW

1. That due notice of public hearing was given as required by law and that this Commission has jurisdiction over said parties and the matter herein considered.

2. That this Commission has authority to grant said petition under the provisions of Arkansas Code Annotated 15-71-110 and 15-72-217.

ORDER

It is, therefore, ordered by the Commission that the well site enumerated in Finding 1 be declared abandoned and be plugged or re-plugged and surface conditions surrounding the well site be restored in accordance with Arkansas Code Annotated 15-72-217. However, in lieu of plugging the wells, the Director of Production and Conservation shall have authority to transfer the wells to another operator in accordance with all applicable Commission rules.

This Order shall be effective from and after November 02, 2007; and the Commission shall have continuing jurisdiction for the purposes of enforcement, and/or modifications or amendments to the provisions of this Order.

ARKANSAS OIL AND GAS COMMISSION

Lawrence Bengal,
Director of
Production and Conservation

It is so Ordered by the Commission:

Chad White, Chairman
W. Frank Morledge, Vice-Chairman
Charles Wohlford
Bill Poynter
Mike Davis
Ken Williams
Carolyn Pollan
William L. Dawkins
Jerry Langley

STATE OF ARKANSAS
DEPARTMENT OF POLLUTION CONTROL AND ECOLOGY
8001 NATIONAL DRIVE, P.O. BOX 8913
LITTLE ROCK, ARKANSAS 72219-8913
PHONE: (501) 562-7444
FAX: (501) 562-4632

CERTIFIED MAIL: P 905 080 092
RETURN RECEIPT REQUESTED

December 4, 1992

O'Brien Operating Company
P.O. Box 6020
Shreveport, LA 71136-6020

Gentlemen:

The enclosed permit (No. 4083-WR-1) is your authority to construct, operate and maintain the John Parnell #2 Salt Water Disposal System as set forth in your application dated October 2, 1992.

This permit is issued subject to the provisions of the Arkansas Water and Air Pollution Contol Act (A.C.S. Sec. 8-4-101 et seq) and the terms and conditions stated therein. Approval for underground injection is also required from the Arkansas Oil and Gas Commmission.

After considering the facts and requirements of the aforementioned Act and implementing regulations, I have determined that Permit No. 4083-WR-1 for the construction, operation and maintenance of a water pollution control system for John Parnell #2 SWDS be issued and effective on the date specified in the permit, unless a Commission review has been properly requested under Section 4, Part III, of Regulation No. 8, Arkansas Department of Pollution Control and Ecology Administrative Procedures, within 30 days after service of this decision.

All persons entitled to do so, may request an adjudicatory hearing and Commission review on whether the decision of the Director should be reversed or modified. Such a request shall be in the form and manner required by Section 4, Part III of Regulation No. 8.

Sincerely,

Chuck Bennett
Chief, Water Division

CB:ka

Enclosure

cc: Arkansas Dept. of Health - Division of Engineering
Marty Perdue, Arkansas Oil & Gas Commission
Darlene Ogden, ADPC&E, El Dorado office

RECEIVED
DEC 07 1992
ARKANSAS OIL & GAS COMMISSION

NARRATIVE DESCRIPTION

FOR

O'BRIEN OPERATING COMPANY

ENGINEER: Ken Estes PERMIT NO. 4083-WR-1 DATE: 11/10/92

O'Brien Operating Company proposes to revise the permit to reflect a change in the construction and operation of the John Parnell No. 2 salt water disposal system located in Section 13, Township 17S, Range 16W, Agnes Road North Field, Union County, Arkansas. The John Parnell No. 2 well was converted to dispose of salt water into the Cotton Valley Formation at a subsurface depth interval of 4570 to 4635 feet. There will be 1 well connected to the system that produces 350 barrels of salt water per day. There is one 400 barrel holding tank with automatic cut-off switches to producing wells and firewalls around all salt water storage tanks provided to meet Department requirements for SWD systems. Injection pressure is 750 psig.

Flow rates can be verified by a turbine flow meter. A gauge will be placed on the well head for checking pressure.

There are no transfer stations connected to the disposal system.

The following well is approved for connection to the John Parnell No. 2 SWD System:

John Parnell Well No. 1 SENW Sec. 13-17S-16W 350 BW/D

Any modification of the system as described in the application will require a revision of the permit.

The revision of this permit was necessary to reflect the deletion of 400 barrels of water storage at the John Parnell No. 2 SWD System.

DEPARTMENT OF POLLUTION CONTROL AND ECOLOGY
8001 NATIONAL DRIVE, P.O. BOX 8913
LITTLE ROCK, ARKANSAS 72219
PHONE: (501) 562-7444
FAX: (501) 562-4632

CERTIFIED MAIL: P 905 076 639
RETURN RECEIPT REQUESTED

December 4, 1991

O'Brien Operating Company
P.O. Box 6020
Shreveport, LA 71136-6020

Gentlemen:

The enclosed permit (No. 4083-W) is your authority to construct, operate and maintain the John Parnell #2 Salt Water Disposal System as set forth in your application dated July 18, 1991.

This permit is issued subject to the provisions of the Arkansas Water and Air Pollution Contol Act (A.C.S. Sec. 8-4-101 et seq) and the terms and conditions stated therein. Approval for underground injection is also required from the Arkansas Oil and Gas Commmission.

After considering the facts and requirements of the aforementioned Act and implementing regulations, I have determined that Permit No. 4083-W for the construction, operation and maintenance of a water pollution control system for John Parnell #2 SWD be issued and effective on the date specified in the permit, unless a Commission review has been properly requested under Section 4, Part III, of Regulation No. 8, Arkansas Department of Pollution Control and Ecology Administrative Procedures, within 30 days after service of this decision.

All persons entitled to do so, may request an adjudicatory hearing and Commission review on whether the decision of the Director should be reversed or modified. Such a request shall be in the form and manner required by Section 4, Part III of Regulation No. 8.

Sincerely,

Chuck Bennett
Chief, Water Division

RECEIVED
DEC 06 1991
ARKANSAS OIL & GAS COMMISSION

CB:kc

Enclosure

cc: Arkansas Dept. of Health - Division of Engineering
Marty Perdue, Arkansas Oil & Gas Commission
Darlene Ogden, ADPC&E, El Dorado office

NARRATIVE DESCRIPTION

FOR

O'BRIEN OPERATING COMPANY

ENGINEER: Ken Estes PERMIT NO. 4083-W DATE: 08/13/91

O'Brien Operating Company proposes to permit the construction and operation of the John Parnell No. 2 salt water disposal system located in Section 13, Township 17S, Range 16W, Agnes Road North Field, Union County, Arkansas. The John Parnell No. 2 well will be converted to dispose of salt water into the Cotton Valley Formation at a subsurface depth interval of 4570 to 4635 feet. There will be 1 well connected to the system that produces 350 barrels of salt water per day. There are two 400 barrel holding tanks with firewalls around all salt water storage tanks provided to meet Department requirements for SWD systems. Injection pressure is 750 psig.

Flow rates can be verified by turbine meter. A gauge will be placed on the well head for checking pressure.

There are no transfer stations connected to the disposal system.

The following wells are approved for connection to the John Parnell No. 2 SWD System:

John Parnell Well No. 1 SENW Sec. 13-17S-16W 350 BW/D

Any modification to the system as described in the application will require a revision of the permit.

This is the initial application for a permit to dispose of salt water by O'Brien Operating Company on the John Parnell No. 2 SWD System.

RECEIVED
DEC 06 1991
ARKANSAS OIL & GAS COMMISSION

Issued By

STATE OF ARKANSAS
DEPARTMENT OF POLLUTION CONTROL AND ECOLOGY
8001 NATIONAL DRIVE, P.O. BOX 9583
LITTLE ROCK, ARKANSAS 72209

CSN No. 70-0424

Permit No. 4083-W

Effective Date 01/02/92

To:

O'Brien Operating Company
P.O. Box 6020
Shreveport, LA 71136-6020

Consulting Engineer:

This permit is your authority to operate and maintain the waste disposal system as set forth in your application dated July 18, 1991. This permit is issued subject to provisions of the Arkansas Water and Air Pollution Control Act (A.C.A. Sec. 8-4-101 et seq.) and the following terms and conditions:

1. The disposal system shall be constructed or modified in accordance with the final plans and specification as approved by the Department of Pollution Control and Ecology.
2. This permit shall automatically terminate unless construction of the disposal system has commenced within 3 months of the effective date and completed with all reasonable diligence. The Department shall be notified in writing when the disposal system has been completed in order that it may be inspected.
3. The disposal system shall be operated by qualified personnel and maintained in good operating condition at all times.
4. By-passing of the disposal system is prohibited and will result in revocation of this permit and/or other appropriate enforcement action by the Department.
5. There shall be no increase in the volume or strength of the waste being treated by the disposal system except within design limits covered by the plans and specifications approved by the Department. No extension or modification of the disposal system may be made without the issuance of a new permit.
6. This permit may be revoked or modified whenever it is necessary, in the opinion of the Department, to prevent or abate pollution of any waters of the state.
7. Nothing herein contained shall be construed as releasing the permittee from any liability for damage to persons or property by reason of the installation, maintenance or operation of the disposal system.
8. This Permit is issued in reliance upon the statements and representations made in the application and the plans and specifications, and the Department has no responsibility for the adequacy or proper functioning of the disposal system.
9. PLEASE NOTE ADDITIONAL CONDITIONS ON THE ATTACHED SHEET.

RECEIVED DEC 06 1991

ARKANSAS DEPARTMENT OF POLLUTION CONTROL AND ECOLOGY

By: _____ 12/3/91
Chief, Water Division Date

Permit No. 4083-W
O'Brien Operating Co.

10. The permittee shall comply with all applicable permit fee requirements for state permits as described in ADPC&E Regulations No. 9 (Regulation for Fee System for Environmental Permits). Failure to promptly remit all required fees shall be grounds for the Director to initiate action to terminate this permit under the provisions of ADPC&E Regulation No. 8.

11. This system is known as the John Parnell #2 Salt Water Disposal System located in Section 13, Township 17 South, Range 16 West, Agnes Road North Field, Union County, El Dorado, Arkansas.

12. This permit is based on a projected disposal rate of 350 barrels per day. An increase of 15% or more above this amount will require modification of this permit.

13. The John Parnell #2 disposal well will receive salt water from the John Parnell #1 well. The same will be injected into the Cotton Valley Formation at a subsurface depth interval of 4570' to 4635'.

14. There shall be posted at the site of the well or tank battery a permanent sign bearing the name of the operator, the permit number, the lease, and legal description of the location.

15. No salt water shall be discharged to the surface waters of the State of Arkansas.

16. There shall be constructed around all salt water storage tanks an impermeable dike capable of holding 1.5 times the capacity of the largest tank contained within the berm.

17. As an adjunct to the above conditions, the permittee shall comply with all provisions of Arkansas Pollution Control and Ecology Commission Regulation No. 1.

RECEIVED
DEC 06 1991
ARKANSAS OIL & GAS COMMISSION

AOGC — 4a

ARKANSAS OIL AND GAS COMMISSION
P.O. Box 1472
EL DORADO, ARKANSAS 71731-1472

AUTHORITY TO PRODUCE

TO: O'Brien Operating Company
P.O. Box 6020
Shreveport, Louisiana 71136-6020

SUPPLEMENT NO. CC - 114 - SA

DATE December 7, 1990

COMPLETION X RECOMPLETION _____

REWORK _____ CHANGE OR CORRECTION _____

WELL NAME John Parnell NO. 2 FIELD Agnes Road North

LOCATION 1000' FWL & 2000' FNL SEC. 13 TWP. 17S RGE. 16W

COUNTY Union

PRODUCING INTERVAL Cotton Valley FROM 5533 FT., TO 5542 FT.

Gentlemen:

This will be your authority to produce the above well at the rate of 80 (BBLS.) and/or _____ (MCF) per day, effective 7 A.M., November 1, 1990.

This is authority for Enron Oil Trading & Transportation to connect to this well and run this assignment allowable upon receipt of approved Form 4 covering this lease.

REMARKS: New Completion.

cc: Enron Oil Trading & Transportation
P.O. Box 1188
Houston, Texas 77251-1188
and
3460 Industrial Drive
Bossier City, Louisiana 71112

Yours truly,

By: Shirley Knight
SHIRLEY KNIGHT, STATISTICIAN II

ADC-CDC-2474

AOGC—4—(93)

ARKANSAS OIL AND GAS COMMISSION
P.O. Box 1472
El Dorado, Arkansas 71731-1472

Producers Certificate of Compliance and Authorization to Transport Oil or Gas from Lease

Well JOHN PARNELL # 2 No. 2 (Sec.) 13 (Twp.) 17S (Rge.) 16W County UNION

Operator JOHN C. ROGERS Field ~~AGNES RD NORTH~~

Address all correspondence concerning this form to: JOHN C. ROGERS

Street 434 SO. BRADLEY City ELDORADO State AR Zip 71730

Phone ~~501 8638861~~ Extension N/A

The above named operator hereby authorizes _____ (Name of First Purchaser)

Whose principal place of business is _____ (Street) (City) (State & Zip)

And whose field address is _____

To Purchase _____ % of the Oil ( ) Gas ( ) produced from the lease designated above until further notice.

Other Purchasers Purchasing Oil and/or Gas from this Well or Wells:

_____ (Name of Purchaser) _____ % _____ (Name of Purchaser) _____ %

Remarks:

CHANGE IN OWNERSHIP EFFECTIVE 9-1-95

FORMER OPERATOR: O'BRIEN OPERATING CO.
BOX 6020
SHREVEPORT, LA. 71136

THIS WELL IS A SWD WELL AND DOES NOT PRODUCE OIL

RECEIVED
ARK. OIL & GAS COMM.
95 SEP 15 AM 10: 38

"Approval of the Oil and Gas Commission of a change in operating ownership shall not release the previous operator from any environmental liability then existing or from the obligation to plug and abandon wells upon the above lease."

The undersigned certifies that this report has been examined by me and to the best of my knowledge is true, correct, complete and that the rules and regulations of the Arkansas Oil and Gas Commission have been complied with except as noted above and that the purchaser (s) is (are) authorized to purchase the percentage of oil and/or gas produced from the above described property and that this authorization will be valid until further notice of the purchaser named herein or until cancelled by the Arkansas Oil and Gas Commission.

Executed this the _____ day of _____ 19____

APPROVED: Sept 19, 1995
ARKANSAS OIL & GAS COMMISSION
By Shirley Knight
No. 884 876

John C. Rogers
New Operator
(Affiant)

O'BRIEN OPERATING CO.
Existing Operator
Morgan P. O'Brien
(Affiant)

MORGAN P. O'BRIEN
EXECUTIVE V.P.

ACI—2990

ARKANSAS
OIL AND GAS
COMMISSION

2215 West Hillsboro St. ▪ P.O. Box 1472
El Dorado, Arkansas 71731-1472

William E. Wright
Director

Phone: (501) 862-4965
FAX Number: (501) 862-8823

September 11, 1995

Mr. John C. Rogers
434 South Bradley
El Dorado, Arkansas 71730

RE: O'Brien Operating Company
John Parnell #2 SWD Well
Agnes Road North Field
Union County, Arkansas

Dear Mr. Rogers:

Please file the enclosed AOGC Form 4's "Producers Certificate of Complaince and Authorization to Transport Oil or Gas from Lease" on the referenced well. It is also necessary to file an additional $3,000 letter of credit to cover the operator change. I cannot approve the Form 4's on the John Parnell #1 well, Agnees Road North Field, into your name until all information is received by this office.

If we may be of any assistance, please advise.

Yours truly,

Shirley Knight

Shirley Knight,
Statistician II -
Production Department

:sk

Enclosure

cc: Mr. W. E. Wright, Director
Mr. Martin Perdue, UIC Section

COMMISSION MEMBERS ▪ E. Boyd Alderson, Chairman, El Dorado
Ned R. Price, Vice Chairman, Smackover ▪ Spence A. Leamons, Fort Smith
J. David Reynolds III, Camden ▪ Chris Weiser, Magnolia ▪ Kent Dollar, Russellville
Phillip E. Norvell, Fayetteville ▪ Lowell D. Boynton, Fayetteville ▪ Chad White, Magnolia

An equal opportunity employer

10M—2-69—00545—AP&SCo.

AOGC-4—(56)

Arkansas Oil and Gas Commission

EL DORADO, ARKANSAS

Producers Certificate of Compliance and Authorization to Transport Oil or Gas from Lease

Lease John Parnell #2 (Sec.) 13 (Twp.) 17S (Rge.) 16W County Union

Producer O'Brien Operating Company Field Agnes Road North

Address all correspondence concerning this form to: O'Brien Operating Co.

Street P.O. Box 6020 City Shreveport State LA 71136-6020

The above named producer hereby authorizes Enron Oil Trading & Transportation
(Name of Transporter)

Whose principal place of business is 1400 Smith St. (Street) Houston (City) Texas 77002 (State)

And whose field address is 3460 Industrial Dr. Bossier City, LA 71112

To transport ~~100~~ % of the Oil (X) Gas ( ) produced from the lease designated above until further notice.

Other transporters transporting oil from this lease are:

None (Name of Transporter) ____ % (Name of Transporter) ____ %

Remarks:

The undersigned certifies that this report has been examined by me and to the best of my knowledge is true, correct, complete and that the rules and regulations of the Arkansas Oil and Gas Commission have been complied with except as noted above and that the transporter(s) is (are) authorized to transport the percentage of oil produced from the above described property and that this authorization will be valid until further notice of the transporter named herein or until cancelled by the Arkansas Oil and Gas Commission.

Executed this the 15th day of November 1989

APPROVED: Dec 7, 1990
ARKANSAS OIL & GAS COMMISSION

By Shirley Knight

No. CC 1755

O'BRIEN OPERATING COMPANY
(Company or Operator)

J R Gordon
(Affiant)

NOV 6 1990

5M—5-71—63489—PP&SCo. AOGC-3(56)

STATE OF ARKANSAS
OIL AND GAS COMMISSION
El Dorado, Arkansas

34,337

Well Completion and Recompletion Report

(Instructions: See Reverse Side)

Notice: This form must be completed and filed prior to allowable being granted.

WELL DESCRIPTION

Field: Agnes Road North
Name of Operator: O'Brien Operating Co.
Pool Completed In: Cotton Valley
Address: Street: P.O. Box 6020
Lease Name: John Parnell No. 2 SWD
Exact Location: 1000' FWL & 2000' FNL
City: Shreveport
Sec. 13 Twp. 17S Rge. 16W
County: Union
State: LA 71136-6020
Date Commenced: 10-8-90
Date Completed: 10-04-91
Elevation: 252.8
Total Depth Drilled: 60001'
Electric Log Run: Yes X No
Electric Log Filed: Yes X No

CASING, TUBING, PERFORATING AND COMPLETION PROGRAM USED IN WELL

Conductor: (Size & Wt.) None set at ft. w/ sks.
Surface: (Size & Wt.) 8-5/8 24# set at 762 ft. w/ 350 sks.
Intermediate: (Size & Wt.) None set at ft. w/ sks.
Production: (Size & Wt.) 5-1/2 17# set at 5730 ft. w/ 665 sks.
Tubing: (Size & Wt.) 2-7/8 6.5# set at 4484 ft.
Peforations: Size 0.4 No. Per Foot 4
Peforated Intervals: 4575' - 4590'

Acidized: Yes X No ; Interval 4575' - 4590' w/ 1000 gals.
Fractured: Yes No X ; Interval w/ lbs.
of sand; bbls. of oil.

LEASE DATA

1. Number of wells located on this lease, including this well
2. Tank battery to which this well is connected: Existing New
3. Liquid production from this well is sold to ((Address
4. Disposition of gas from this well: Vented Fuel Sold
   If sold, to whom
   Address

RECEIVED OCT 08 1991 ARKANSAS OIL & GAS COMMISSION

PRODUCTION

Date of Test Actual Length of Time Tested
Type Well: Flowing Gas Lift Pump
Tubing Pressure Casing Pressure Choke Size
Net Oil Produced bbls. Gas Produced MCF % BSW GOR
Gravity Oil BHP Recorded
Net Oil in 24 Hours Open Flow Potential MCF
Purpose of this test: Original Completion Workover Recompletion
Allowable Requested

REMARKS:
Please use reverse side of this page for all pertinent remarks.

CERTIFICATE

I declare under the penalties of perjury that this report has been examined by me and to the best of my knowledge is true, correct and complete.

Morgan P. O'Brien
Morgan P. O'Brien
Executive Vice President

API # 03-139-12,844 SERIAL # 34,337

FIELD Agnes Rd. North COUNTY Union

OPERATOR O'Brien Operating Co.

LEASE John Parnell NUMBER 2

ZONE Cotton Valley

LOCATION 1000' FWL & 2000' FNL SC TW RG 13-17s-16w

DATE APPROVED 10-16-91 COMPLETED DATE 10-4-91

TOTAL DEPTH 6001' PBTD 5490'

COMPLETION PROGRAM

CONDUCTOR:

SURFACE: 8 5/8" set @ 762' w/ 350 sks

INTERMEDIATE:

PRODUCTION: 5 1/2" set @ 5730' w/ 665 sks

TUBING: 2 7/8" set @ 4484'

PACKER: 4484'

PERFORATED INTERVALS: 4575' - 4590'

INJECTION DATA

INJECTION PRESSURE 2288 # ANNULUS PRESSURE 0

AMT. OF INJECTION ALLOWABLE 10,850 BSWPM

DATE PLUGGED:

TEST DATA

DATE TESTED ~~Oct~~ Nov 5 1991. PASS X FAIL

NUMBER OF TIMES TESTED
(MAXIMUM 3 TIMES)

WELL DATA SHEET

TYPE OF WELL: SALT WATER DISPOSAL
API: 03-139-12,844
SERIAL: 34,337
COMMENCE DATE: 10/08/90
COMPLETION DATE: 10/04/91
FIELD: AGNES ROAD NORTH
ZONE: COTTON VALLEY
COUNTY: UNION
OPERATOR: O'BRIEN OPERATING COMPANY
LEASE: JOHN PARNELL
NUMBER: 2
UNIT DESCRIPTION: 80 ACRES STAND-UP UNIT W/2 NW/4
UNIT SIZE: 80
PLUGGED BACK TOTAL DEPTH: 5,490
TOTAL DEPTH: 6,001
ELEVATION: 252.8
LOCATION: 1000'FWL & 2000'FNL
SECTION-TOWNSHIP-RANGE: 13-17S-16W
ALLOWABLE FACTOR: 0 %
ORDER:
DATE STAMPED: 10/08/91

CASING, TUBING, PERFORATING AND COMPLETION PROGRAM USED IN WELL

	CASING SIZE		WEIGHT		DEPTH			CEMENT
CONDUCTOR:		in		lbs	0	ft		
SURFACE:	8 5/8	in	24	lbs	762	ft		350 sks
INTERMEDIATE:		in		lbs	0	-	0 ft	
PRODUCTION:	5 1/2	in	17	lbs	5,730	ft		665 sks
LINER:		in		lbs	0	-	0 ft	
TUBING:	2 7/8	in	6.5	lbs	4,484	ft		

PACKER: 4484'
PERFORATIONS: SIZE: 0.4
NO. PER FOOT: 4
PERFORATED INTERVALS: 4575' - 4590'
ACIDIZED: 4575' -4590' W/ 1000 GALS.
FRACTURED:

INITIAL PRODUCTION DATA

DATE TESTED: / /
LENGTH OF TEST:
PRODUCING METHOD: F
FLOWING WELLHEAD PRESSURE: 0 psia
CHOKE SIZE:
SHUT-IN WELLHEAD PRESSURE: 0
OIL: 0 Bbls
GAS: 0 MCFD
BSW: 0 %
GOR: 0 CF/Bbls
GRAVITY: API
OPEN FLOW: 0 MCFD
BHP: 0 psia @ 0 ft

TEST DATA

DATE TESTED: / /
MAXIMUM DELIVERABILITY: 0 MCFD
ABSOLUTE OPEN FLOW: 0 MCFD
SHUT-IN WELLHEAD PRESSURE: 0 psia
ALLOWABLE: 0 MCFD

OIL PURCHASER:
GAS PURCHASER: 0 % 0 % 0 % 0 % 0 %
ABANDONED DATE: / /
REMARKS:

Dec 13 1996 pass

O'BRIEN OPERATING COMPANY

October 7, 1991

Arkansas Oil and Gas Commission
P.O. Box 1472
El Dorado, AR 71731-1472

Attention: Mr. Martin T. Perdue

Re: John Parnell NO. 2
Sec. 13-17S-16W
Agnes Road North Field
Union County, Arkansas

Dear Marty:

Enclosed please find the following materials regarding the above referenced well:

1. Schlumberger Service Ticket

2. Well Completion and Recompletion Report

3. Schlumberger Tracer Survey

We hope that you will find everything in order, but should you need more information, please advise.

Very truly yours,

O'BRIEN OPERATING COMPANY

Morgan P. O'Brien

Morgan P. O'Brien
Executive Vice President

MPO/jlw

Enclosures

RECEIVED
OCT 08 1991
ARKANSAS OIL & GAS COMMISSION

MAILING ADDRESS: P. O. BOX 6020 • SHREVEPORT, LA. 71136-6020 TELEPHONE: (318) 869-3247
STREET ADDRESS: 5925 LINE AVENUE • SHREVEPORT, LA. 71106 FACSIMILE: (318) 868-9835

SCHLUMBERGER WELL SERVICES

A Division of Schlumberger Technology Corporation

P. O. BOX 2175 • HOUSTON, TEXAS 77252-2175

SERVICE REPORT—RULE B - 31

STATE OF ARKANSAS—OIL AND GAS COMMISSION

DATE: 10/4/91

COMPANY: O'Brien Operating Co

ADDRESS: PO Box 6020 | CITY: Shreveport | STATE: La 71136-6020

WELL: 2 John Parnell

FIELD: ~~Eldorado~~ Agnes Rond North | COUNTY: Union

LOGGING RECORD

DEPTH LOGGED		TYPE OF LOG
5510		IB
5490		BP CDB
4590		RTS

PERFORATING RECORD

DEPTH PERFORATED		NO. OF SHOTS	DEPTH PERFORATED		NO. OF SHOTS
4590	4375	61			

JUN 12 1992
ARKANSAS OIL & GAS COMMISSION

BRIDGE PLUG RECORD

SETTING DEPTH		SIZE AND TYPE	SETTING DEPTH		SIZE AND TYPE

LOCATION: Shreveport | ENGINEER: Edington

SWS—1281-B

DISTRIBUTION – COMPANY | OIL AND GAS COMMISSION—BOX 719, EL DORADO

DIVISION | LOCATION

COMPLETION SWS-2751-G 10-3-91 410012

SCHL INVOICE NUMBER	DATE RECEIVED BY UNIT FINANCIAL	SCHL VENDOR CODE	SCHL CUSTOMER CODE
[redacted]	[redacted]	[redacted]	[redacted]

SERVICE(S), EQUIPMENT AND/OR PRODUCTS REQUESTED

JUNK BASKET GAUGE RING – BRIDGE PLUG 5½" – CEMENT DUMP BAILER
PERFORATE 3⅛ HEGS – RADIOACTIVE TRACER SURVEY

CUSTOMER FURNISHED LEASE/WELL INFORMATION

STATE	ST. CODE	COUNTY (PARISH/BOROUGH/AREA)	RIG NAME	OFFSHORE ZONE
ARK.	[redacted]	UNION	MOSLEY	—

LEASE	WELL NUMBER	PRICE ZONE
JOHN PARNELL #2 SWD ETAL		SED

LOCATION	FIELD	ORIGINAL HOLE SAID TO BE SIDETRACKED AT
	EAST LISBON	

COMPANY	SAID WELL IS SAID TO BE IN GOOD CONDITION AND DRILLED TO A DEPTH OF
O'BRIEN OPERATING CO.	5654 FT.

THIS IS A CONTRACT. PLEASE READ CAREFULLY. IN CONSIDERATION OF THE PRICES AND THE SERVICES, EQUIPMENT AND/OR PRODUCTS PROVIDED TO CUSTOMER HEREUNDER, CUSTOMER AND SCHLUMBERGER AGREE TO BE BOUND BY THE TERMS AND CONDITIONS SET FORTH ON THE REVERSE SIDE HEREOF. THERE ARE, AMONG OTHER THINGS, INDEMNITY AND HOLD HARMLESS PROVISIONS AND WARRANTY EXCLUSIONS THEREIN. CUSTOMER MAY CHOOSE TO NEGOTIATE DIFFERENT TERMS AND CONDITIONS WITH SCHLUMBERGER WHICH MAY ENTAIL INCREASED PRICES AND/OR THE PROVISION OF INSURANCE COVERAGE PROTECTING SCHLUMBERGER AGAINST THE LIABILITIES PRESENTLY ASSUMED BY CUSTOMER HEREUNDER.

CUSTOMER'S NAME - PRINT	TOOL PROTECTION REQUESTED IF AVAILABLE	CUSTOMER PLEASE INITIAL ONE
O'BRIEN OPERATING	YES	NO ☑ NOT AVAILABLE

INVOICE MAILING ADDRESS: P.O. BOX OR STREET	CITY	STATE	ZIP CODE

SIGNATURE OF CUSTOMER OR AUTHORIZED REPRESENTATIVE	TITLE AND ADDRESS IF EXECUTED BY CUSTOMER'S REPRESENTATIVE
X [signature]	

THE ESTIMATED CHARGES AND DATA SHOWN BELOW ARE SUBJECT TO CORRECTION BY SCHLUMBERGER – FINANCIAL DEPARTMENT

UNIT NUMBER		LOCATION NAME	LOCATION CODE	LOCATION TERRITORY JOB IN	ACTUAL ROUND TRIP MILEAGE
138	☑ SPORT ☐ STANDARD	SPORT	3802	SPORT	245 FROM SPORT

INITIAL COMPLETION: ☐ EXPL. WELL ☐ DEVEL. WELL ☑ WORKOVER ☐ OTHER ☐ 1ST TRIP ☑ SUBSEQUENT TRIP ☐ NO TRIP ☑ DAYLIGHT OPERATION — MILEAGE CHARGED: N/C FROM SPORT

MKT. CODE | DRILLED FOR: ☐ OIL ☑ OTHER SWD ☐ GAS | ☑ LAND ☐ OFFSHORE ☐ BARGE ☐ MOTOR VESSEL ☑ LIFTBOAT | SCHL WIRELINE DEPTH: 5510 | MAX. DEV. | MAX. WELL HEAD PRESS. PSI

	Date	Time	Desc No.	Time Code	Elapsed Time	Desc No.	OP Code	Equip Code	Reference Code	Item	Quantity	Unit Price	Amount
Cust Time	10/2	1100		22		1		JC	8197	Srv Chrg	665	1.2	661.20
Lt. HQ		0730								Depth Chrg	5510	.14	771.40
Arr Dock													
Left Dock										Oper Chrg	FLAT	300.00	300.00
Arr. Well		1000		02	2.5								1732.60
Rig Up-St		1200		10	2.5			DSC	-504		75%		1299.45
Rig Up-Fl		1230		05	0.5								
Beg Oper		1230				First Evaluation Log			☐ Yes ☐ No			Est. Charge	433.15
Comp Oper		1330	1	13	1.0	☐ OH		☐ CH	State Tax			After Tax Charge	
Beg Oper		1330				2		BP	8110	Depth Chrg	5490	.22	1207.80
Comp Oper		1430	2	13	1.0								
Beg Oper		1530		10	1.0				-120	Oper Chrg	FLAT	1100.00	1100.00
Comp Oper		1600	3	13	0.5								2307.80
Beg Oper		1600						DSC	-504		75%		1730.85
Comp Oper		1700	4	13	1.0								
Beg Oper	10/2	1700		09								Est. Charge	576.95
Comp Oper						☐ OH		☐ CH	State Tax			After Tax Charge	
Beg Oper						3		DB	8187	Depth Chrg	5490	.20	1098.00
Comp Oper													
Beg Oper										Oper Chrg	FLAT	300.00	300.00
Comp Oper													1398.00
Beg Oper								DSC	-504		75%		1048.50
Comp Oper													
Rig DN - Fl				96								Est. Charge	349.50
Left Site						☐ OH		☐ CH	State Tax			After Tax Charge	
Ret Dock								PO/RSR	9621				380.00
Ret HQ								WHCONN	9132				250.00
													630.00
								DIC	-504		75%		472.50
												Est. Charge	157.50
						☐ OH		☐ CH	State Tax			After Tax Charge	
												Estimated Total Charge	3272

Time Chgs	Crew	Reg Eq	Spec Eq	Tot. Trip Time
Total Hrs				Eq. Time / Time / Date
Free Hrs				Reg Eq St Time
Oper Time				Reg Eq Fl Time
Conv Time				Spec Eq St Time
Hrs Chgd				Spec Eq Fl Time

Serv.	First Reading	Last Reading	Footage Delivered

Desc No.	Interval Perforated	Shots Per Ft.
4	4575-4590	4

Desc No.	No. Guns	Shots Fired	Type Charge	Size	Thru Tubing
4	1	61	HEGS	3⅛	NO

OCT 08 1991
KANSAS CORPORATION COMMISSION

No. Desc.	No. of Misruns	No. Shots Fired	No. of Misfires
1		61	

Pressure Eq. Used	H_2S Present
PO/RSR	%

No. Sel. Switches	Sel. Sw. Failures	FIT Tests Attempted	FIT Tests Successful

FIT Tests Sold	FIT Tests Dry	FIT Seal Failures

THIRD PARTY INVOICE NUMBER: [redacted]

Special Agreement Number:

Witnessed By: J. D. MOSS

THE SERVICE(S) AND/OR EQUIPMENT COVERED BY THIS SERVICE ORDER CONTRACT HAVE BEEN PERFORMED OR RECEIVED AS SET FORTH ABOVE (SEE #23 ON REVERSE)

SERVICE ORDER CONTRACT-CONTINUATION

SWS—2754-C

Schlumberger

DATE: 10-3-91

SERVICE ORDER NO.: 4 1 6 6 7 2

CUSTOMER'S NAME - PRINT: O'BRIEN OPERATING

Date	Time	Desc. No.	Desc. Code	Depart Time	Desc. No.	Off. Code	Equipment Code	Reference Code	Item	Quantity	Unit Price	Amount	Serv.	First Reading	Last Reading	Footage Delivered
Beg Oper					4		4665	5180	Depth Chrg	4590	14	642.60				
Comp Oper																
Beg Oper								785	Oper Chrg	64	3.29	189.20				
Comp Oper												253.20				
Beg Oper							DISC	504		752		1788.72				
Comp Oper																
Beg Oper											Est. Charge	33.40				
Comp Oper					☐ OH		☐ CH	[redacted]								
Beg Oper																
Comp Oper																
Beg Oper									Oper Chrg							
Comp Oper							TRACTOR					1091.50				
Beg Oper																
Comp Oper																
Beg Oper											Est. Charge					
Comp Oper					☐ OH		☐ CH	[redacted]								
Beg Oper									Depth Chrg							
Comp Oper																
Beg Oper									Oper Chrg							
Comp Oper																
Beg Oper																
Comp Oper																
Beg Oper											Est. Charge					
Comp Oper					☐ OH		☐ CH	[redacted]								
Beg Oper									Depth Chrg							
Comp Oper																
Beg Oper									Oper Chrg							
Comp Oper																
Beg Oper																
Comp Oper																
Beg Oper											Est. Charge					
Comp Oper					☐ OH		☐ CH	[redacted]								
Beg Oper									Depth Chrg							
Comp Oper																
Beg Oper									Oper Chrg							
Comp Oper																
Beg Oper																
Comp Oper																
Beg Oper											Est. Charge					
Comp Oper					☐ OH		☐ CH	[redacted]								
Beg Oper									Depth Chrg							
Comp Oper																
Beg Oper									Oper Chrg							
Comp Oper																
Rig DN-FI																
Left Site																
Ret Dock											Est. Charge					
Ret. HQ					☐ OH		☐ CH	[redacted]								
TOTAL TRIP TIME												3.5				

Interval Perforated	Shots Per Ft.
4575-90	4

Desc. No.	No. Guns	Shots Fired	Type Charge	Size	Thru Tubing
4	1	64	HC	3½	

THE SERVICE(S) AND/OR EQUIPMENT COVERED BY THIS SERVICE ORDER CONTRACT HAVE BEEN PERFORMED OR RECEIVED AS SET FORTH ABOVE (SEE #23 ON REVERSE)

5M—5-71—63489—PP&SCo. AOGC-3(56)

STATE OF ARKANSAS
OIL AND GAS COMMISSION
El Dorado, Arkansas

34337

Well Completion and Recompletion Report

(Instructions: See Reverse Side)

Notice: This form must be completed and filed prior to allowable being granted.

WELL DESCRIPTION

Field: Agnes Road North
Name of Operator: O'Brien Operating Co.
Pool Completed In: Cotton Valley
Lease Name: John Parnell No. 2
Address: Street: P.O. Box 6020
Exact Location: 1000' FWL & 2000' FNL
City: Shreveport
Sec. 13 Twp. 17S Rge. 16W
County: Union
State: LA 71136-6020
Date Commenced: 10-8-90
Date Completed: 10-26-90
Elevation: 252.8
Total Depth Drilled: 6001
Electric Log Run: Yes X No
Electric Log Filed: Yes X No

CASING, TUBING, PERFORATING AND COMPLETION PROGRAM USED IN WELL

Conductor: (Size & Wt.) None set at ft. w/ sks.
Surface: (Size & Wt.) 8-5/8 24# set at 762 ft. w/ 350 sks.
Intermediate: (Size & Wt.) None set at ft. w/ sks.
Production: (Size & Wt.) 5-1/2 17# set at 5730 ft. w/ 665 sks.
Tubing: (Size & Wt.) 2-7/8" set at 5418 ft.
Peforations: Size 0.4 No. Per Foot 4
Peforated Intervals: 5533-42

11-8-90 MAP

Acidized: Yes No X; Interval w/ gals.
Fractured: Yes No X; Interval w/ lbs.
of sand; bbls. of oil.

LEASE DATA

1. Number of wells located on this lease, including this well 2
2. Tank battery to which this well is connected: Existing New X
3. Liquid production from this well is sold to (Enron Oil Trading & Transportation
(Address 1400 Smith St., Houston, TX 77002
4. Disposition of gas from this well: Vented X Fuel Sold
If sold, to whom
Address

PRODUCTION

Date of Test: 10-5-90 Actual Length of Time Tested: 24
Type Well: Flowing Gas Lift Pump X
Tubing Pressure: 20 Casing Pressure: 20 Choke Size: None
Net Oil Produced: 84 bbls. Gas Produced: Not Measured MCF % BSW: 0.2 GOR
Gravity Oil: 38 BHP Recorded
Net Oil in 24 Hours: 84 Open Flow Potential MCF
Purpose of this test: Original Completion X Workover Recompletion
Allowable Requested: 80 BOPD

NOV 6 1990

REMARKS:
Please use reverse side of this page for all pertinent remarks.

ARKANSAS OIL & GAS COM.

CERTIFICATE

I declare under the penalties of perjury that this report has been examined by me and to the best of my knowledge is true, correct and complete.

J R Gordon

5M—5-71—63489—PP&SCo.

AOGC-3(56)

STATE OF ARKANSAS
OIL AND GAS COMMISSION
El Dorado, Arkansas

Well Completion and Recompletion Report

(Instructions: See Reverse Side)

Notice: This form must be completed and filed prior to allowable being granted.

WELL DESCRIPTION

Field: Agnes Road North
Name of Operator: O'Brien Operating Co.
Pool Completed In: Cotton Valley
Lease Name: John Parnell No. 2
Address: Street: P.O. Box 6020
Exact Location: 1000' FWL & 2000' FNL
City: Shreveport
Sec. 13 Twp. 17S Rge. 16W
County: Union
State: LA 71136-6020
Date Commenced: 10-8-90
Date Completed: 10-26-90
Elevation: 252.8
Total Depth Drilled: 6001
Electric Log Run: Yes X No
Electric Log Filed: Yes X No

CASING, TUBING, PERFORATING AND COMPLETION PROGRAM USED IN WELL

Conductor: (Size & Wt.) None set at ft. w/ sks.
Surface: (Size & Wt.) 8-5/8 24# set at 762 ft. w/ 350 sks.
Intermediate: (Size & Wt.) None set at ft. w/ sks.
Production: (Size & Wt.) 5-1/2 17# set at 5730 ft. w/ 665 sks.
Tubing: (Size & Wt.) 2-7/8" set at 5418 ft.
Peforations: Size 0.4 No. Per Foot 4
Peforated Intervals: 5533-42

Acidized: Yes No X; Interval w/ gals.
Fractured: Yes No X; Interval w/ lbs.
of sand; bbls. of oil.

LEASE DATA

1. Number of wells located on this lease, including this well 2
2. Tank battery to which this well is connected: Existing New X
3. Liquid production from this well is sold to (Enron Oil Trading & Transportation
(Address 1400 Smith St., Houston, TX 77002
4. Disposition of gas from this well: Vented X Fuel Sold
If sold, to whom
Address

PRODUCTION

Date of Test: 10-5-90 Actual Length of Time Tested: 24
Type Well: Flowing Gas Lift Pump X
Tubing Pressure: 20 Casing Pressure: 20 Choke Size: None
Net Oil Produced: 84 bbls. Gas Produced: Not Measured MCF % BSW: 0.2 GOR
Gravity Oil: 38 BHP Recorded
Net Oil in 24 Hours: 84 Open Flow Potential MCF
Purpose of this test: Original Completion X Workover Recompletion
Allowable Requested: 80 BOPD

REMARKS:
Please use reverse side of this page for all pertinent remarks.

RECEIVED
JUL 19 1991
ARKANSAS OIL & GAS COMMISSION

CERTIFICATE

I declare under the penalties of perjury that this report has been examined by me and to the best of my knowledge is true, correct and complete.

J R Gordon

FIELD AGNES Rd. NORTH COMPANY O'Brien Operating Co.

COUNTY Union WELL John Parnell #2

LOCATION S 13 T 17 R 16

COMPETION DATE TOTAL

** COMPLETION & RECOMPLETION DATA**

DATE	PERFORATIONS	REMARKS (Bridge Plug Data, Production Data)
10-9-90		8 5/8" - 762' w/ 350 sks.
10-19-90		5 1/2" - 5730' w/ 665 sks.

ARKANSAS OIL AND GAS COMMISSION

COMPANY O'Brien Operating Co. WELL NAME & NO. John Parnell #2

LOCATION 1000' FWL & 2000' FNL SEC-TWP-RGE 13-17S-11W

COUNTY Union FIELD Agnes Rd. North

Depth to be drilled 6000 feet. Surface casing required 750 feet; to pump pit 1703 feet.

Date to start drilling 9-90; Date permitted 9-13-90; Contractor SDC.

Formation Cotton Valley Fresh water plug to be set 800 to 700.

10-17-90 5720'

SURFACE CASING

Surface casing: Size 8 5/8 Amount 762. Hole Size 12 1/4 Sacks of Cement 350.

Returns _____ Date set 10-9-90 Cementer Coleman Witness _____.

PLUG TO ABANDON

PLUG	HOLE DIAMETER D (in)	HOLE CAPACITY Ch (Cu. ft./ft.)	CEMENT N=100 x Ch/Y (sacks)	SET AT bottom (ft)	SET AT top (ft)	LENGTH L=V/Ch (ft)
1						
2						
3						
4						

Cement calculations based on 100 foot plug.

CEMENT PROPERTIES

Plug	1	2	3	4
Cement Type				
(Y) - Slurry Volume (Cu. ft./sk.)				
(W) - Mix Water (gal./sk.)				
(V) - Slurry = YxN (Cu. ft.)				
(Wb) - Mix Water = WxN/42 (Bbls.)				

Total Depth _____ Plugged in the top of surface casing with _____ sacks of cement.

Cementer _____ Witness _____ Date _____

REMARKS: 5 1/2" - 5,730' w/ 665 sks. Halliburton 10-19-90

COLEMAN CEMENTING INC.
3043 New London Road
Strong, Arkansas 71765
24 Hr. Service
862-0863

№ 7018

JOHN COLEMAN
MOBILE 862-5621
UNIT 61 or 80

North Agnes Rd.

DATE	ORDER NO.	CONTRACTOR	WELL NAME	NUMBER
10/9/90		Rig 7	Powell #2	

CUSTOMER'S NAME: Shula Drlg

ADDRESS: O'Brien Operating Co.

CITY:

CEMENTED BY: KMC

TRUCK DRIVER: Ka-110

SIZE OF CASING:

DEPTH OF HOLE:

Service Instructions: Cement 754 pt of 8 5/8 in a 12 1/4 h.l.

ITEM	QUAN.	UNIT	MATERIAL OR SERVICES	UNIT PRICE	AMOUNT	REMARKS
Pumping						
Mileage	2					
Packer Rental						
Plug						
Acid		Gals.				Bags Returned / Amount Credit
Inhibitor		Gals.				
Centralizers		Ea.				
Float Shoe		Ea.				
Float Collar		Ea.				
Scratchers		Ea.				
Cement Basket						
Thread Lock		lb.				
Clamps		Ea.				
Guide Shoe	1	Ea.				
Class H Cement	200	94	Light 3% CC			
Class A Cement	150		Class A 3% CC			
Calcium Chloride	11.	100				
Cemad I						

RECEIVED OCT 18 1990 ARKANSAS OIL & GAS

The undersigned hereby certifies that the materials listed above were received and services were satisfactory.

[illegible]
AUTHORIZED AGENT

Total	
Delivery Charge	
5% Sales Tax	
TOTAL	[redacted]

HALLIBURTON RESERVOIR SERVICES
A Division of Halliburton Company

FORM 3502

WORK ORDER CONTRACT AND PRE-TREATMENT DATA

ATTACH TO INVOICE & TICKET NO. 004339

DISTRICT Bossier City, LA. DATE 10-16-90

TO: HALLIBURTON RESERVOIR SERVICES YOU ARE HEREBY REQUESTED TO FURNISH EQUIPMENT AND SERVICEMEN TO DELIVER AND OPERATE THE SAME AS AN INDEPENDENT CONTRACTOR TO: Shuler Drlg Co. (CUSTOMER) AND DELIVER AND SELL PRODUCTS, SUPPLIES, AND MATERIALS FOR THE PURPOSE OF SERVICING

WELL NO. 2 LEASE PARNELL SEC. ____ TWP. ____ RANGE ____

FIELD El Dorado COUNTY UNION STATE ARK OWNED BY O'Brien

THE FOLLOWING INFORMATION WAS FURNISHED BY THE CUSTOMER OR HIS AGENT

FORMATION NAME ____ TYPE ____

FORMATION THICKNESS ____ FROM ____ TO ____

PACKER: TYPE ____ SET AT ____

TOTAL DEPTH ____ MUD WEIGHT ____

BORE HOLE ____

INITIAL PROD: OIL ____ BPD, H_2O ____ BPD, GAS ____ MCF

PRESENT PROD: OIL ____ BPD, H_2O ____ BPD, GAS ____ MCF

	NEW USED	WEIGHT	SIZE	FROM	TO	MAX. ALLOW. P.S.I.
CASING						
LINER						
TUBING						
OPEN HOLE						SHOTS/FT.
PERFORATIONS						
PERFORATIONS						
PERFORATIONS						

PREVIOUS TREATMENT: DATE ____ TYPE ____ MATERIALS ____

TREATMENT INSTRUCTIONS: TREAT THRU TUBING ☐ ANNULUS ☐ CASING ☐ TUBING/ANNULUS ☐ HYDRAULIC HORSEPOWER ORDERED ____

Open Hole Test #1

CUSTOMER OR HIS AGENT WARRANTS THE WELL IS IN PROPER CONDITION TO RECEIVE THE PRODUCTS, SUPPLIES, MATERIALS, AND SERVICES

As consideration, the above-named Customer agrees: THIS CONTRACT MUST BE SIGNED BEFORE WORK IS COMMENCED

a) To pay Halliburton Reservoir Services (hereinafter called Halliburton) in accord with the rates and terms stated in Halliburton's current price list. Invoices are payable NET by the 20th of the following month after date of invoice. Upon Customer's default in payment of Customer's account by the last day of the month following the month in which the invoice is dated, Customer agrees to pay interest thereon after default at the highest lawful contract rate applicable, but never to exceed 18% per annum. In the event it becomes necessary to employ attorneys to enforce collection of said account, Customer agrees to pay all collection costs and attorney fees in the amount of 20% of the amount of the unpaid account.

b) To defend, indemnify, release and hold harmless Halliburton, its divisions, subsidiaries, parent and affiliated companies and the officers, directors, employees, agents and servants of all of them from and against any claims, liability, expenses, attorneys fees, and costs of defense to the extent permitted by law for:

1. Damage to property owned by, in the possession of, or leased by Customer, and/or the well owner (if different from Customer), including, but not limited to, surface and subsurface damage. The term "well owner" shall include working and royalty interest owners.
2. Reservoir, formation, or well loss or damage, subsurface trespass or any action in the nature thereof.
3. Personal injury or death or property damage (including, but not limited to, damage to the reservoir, formation or well), or any damages whatsoever, growing out of or in any way connected with or resulting from pollution, subsurface pressure, losing control of the well and/or a well blowout or the use of radioactive material.

The defense, indemnity, release and hold harmless obligations of Customer provided for in this Section b) and Section c) below shall apply to claims or liability even if caused or contributed to by Halliburton's negligence, strict liability, or the unseaworthiness of any vessel owned, operated, or furnished by Halliburton or any defect in the data, products, supplies, materials, or equipment of Halliburton whether in the preparation, design, manufacture, distribution, or marketing thereof, or from a failure to warn any person of such defect. Such defense, indemnity, release and hold harmless obligations of Customer shall not apply where the claims or liability are caused by the gross negligence or willful misconduct of Halliburton. The term "Halliburton" as used in said Sections b) and c) shall mean Halliburton, its divisions, subsidiaries, parent and affiliated companies, and the officers, directors, employees, agents and servants of all of them.

c) That because of the uncertainty of variable well conditions and the necessity of relying on facts and supporting services furnished by others, Halliburton is unable to guarantee the effectiveness of the products, supplies or materials, nor the results of any treatment or service, nor the accuracy of any chart interpretation, research analysis, job recommendation or other data furnished by Halliburton. Halliburton personnel will use their best efforts in gathering such information and their best judgment in interpreting it, but Customer agrees that Halliburton shall not be liable for and Customer shall indemnify Halliburton against any damages arising from the use of such information.

d) That Halliburton warrants only title to the products, supplies and materials and that the same are free from defects in workmanship and materials. THERE ARE NO WARRANTIES, EXPRESS OR IMPLIED, OF MERCHANTABILITY, FITNESS OR OTHERWISE WHICH EXTEND BEYOND THOSE STATED IN THE IMMEDIATELY PRECEDING SENTENCE. Halliburton's liability and Customer's exclusive remedy in any cause of action (whether in contract, tort, breach of warranty or otherwise) arising out of the sale or use of any products, supplies or materials is expressly limited to the replacement of such products, supplies or materials on their return to Halliburton or, at Halliburton's option, to the allowance to the Customer of credit for the cost of such items. In no event shall Halliburton be liable for special, incidental, indirect, punitive or consequential damages.

e) That Customer shall, at its risk and expense, attempt to recover any Halliburton equipment, tools or instruments which are lost in the well and if such equipment, tools or instruments are not recovered, Customer shall pay Halliburton its replacement cost unless such loss is due to the sole negligence of Halliburton. If Halliburton equipment, tools or instruments are damaged in the well, Customer shall pay Halliburton the lesser of its replacement cost or the cost of repairs unless such damage is caused by the sole negligence of Halliburton. In the case of equipment, tools or instruments for marine operations, Customer shall, in addition to the foregoing, be fully responsible for loss of or damage to any of Halliburton's equipment, tools or instruments which occurs at any time after delivery to Customer at the landing until returned to the landing, unless such loss or damage is caused by the sole negligence of Halliburton.

f) To waive the provisions of the Deceptive Trade Practices - Consumer Protection Act, to the extent permitted by law.

g) That this contract shall be governed by the law of the state where services are performed or materials are furnished.

h) That Halliburton shall not be bound by any changes or modifications in this contract, except where such change or modification is made in writing by a duly authorized executive officer of Halliburton.

I HAVE READ AND UNDERSTAND THIS CONTRACT AND REPRESENT THAT I AM AUTHORIZED TO SIGN THE SAME AS CUSTOMER'S AGENT.

SIGNED Mike M. White
CUSTOMER

DATE 10-16-90

TIME 0130 A.M. ~~P.M.~~

We certify that the Fair Labor Standards Act of 1938, as amended, has been complied with in the production of goods and/or with respect to services furnished under this contract.

HALLIBURTON SERVICES
Duncan, Oklahoma 73536
A Division of Halliburton Company

FORM 1908 R-7

WORK ORDER CONTRACT AND PRE-TREATMENT DATA

ATTACH TO INVOICE & TICKET NO. 977381

DISTRICT Haynesville, LA.

DATE 10-19-90

TO: HALLIBURTON SERVICES

YOU ARE HEREBY REQUESTED TO FURNISH EQUIPMENT AND SERVICEMEN TO DELIVER AND OPERATE THE SAME AS AN INDEPENDENT CONTRACTOR TO: O'Brien Operating Co. (CUSTOMER) AND DELIVER AND SELL PRODUCTS, SUPPLIES, AND MATERIALS FOR THE PURPOSE OF SERVICING

WELL NO. 2 LEASE Parnell SEC. ____ TWP. ____ RANGE ____

FIELD ____ COUNTY Union STATE AR. OWNED BY O'Brien Operating Co.

THE FOLLOWING INFORMATION WAS FURNISHED BY THE CUSTOMER OR HIS AGENT

FORMATION NAME ____ TYPE ____

FORMATION THICKNESS ____ FROM ____ TO ____

PACKER: TYPE ____ SET AT ____

TOTAL DEPTH ____ MUD WEIGHT ____

BORE HOLE ____

INITIAL PROD: OIL ____ BPD, H_2O ____ BPD, GAS ____ MCF.

PRESENT PROD: OIL ____ BPD, H_2O ____ BPD, GAS ____ MCF

	NEW USED	WEIGHT	SIZE	FROM	TO	MAX. ALLOW. P.S.I.
CASING	N	17#	5½"	0	5730	2000
LINER						
TUBING						
OPEN HOLE						SHOTS/FT.
PERFORATIONS						
PERFORATIONS						
PERFORATIONS						

PREVIOUS TREATMENT: DATE ____ TYPE ____ MATERIALS ____

TREATMENT INSTRUCTIONS: TREAT THRU TUBING ☐ ANNULUS ☐ CASING ☐ TUBING/ANNULUS ☐ HYDRAULIC HORSEPOWER ORDERED ____

Cement 5730 ft. of 5½" casing with 100 sks Poz A with .87# /sk MF-1 + .5% CFR-3 + 3% KCL + 565 sks Premium with .75% HALAD-322 + 3% KCL

CUSTOMER OR HIS AGENT WARRANTS THE WELL IS IN PROPER CONDITION TO RECEIVE THE PRODUCTS, SUPPLIES, MATERIALS, AND SERVICES

As consideration, the above-named Customer agrees: THIS CONTRACT MUST BE SIGNED BEFORE WORK IS COMMENCED

a) To pay Halliburton in accord with the rates and terms stated in Halliburton's current price list. Invoices are payable NET by the 20th of the following month after date of invoice. Upon Customer's default in payment of Customer's account by the last day of the month following the month in which the invoice is dated, Customer agrees to pay interest thereon after default at the highest lawful contract rate applicable, but never to exceed 18% per annum. In the event it becomes necessary to employ attorneys to enforce collection of said account, Customer agrees to pay all collection costs and attorney fees in the amount of 20% of the amount of the unpaid account.

b) To defend, indemnify, release and hold harmless Halliburton, its divisions, subsidiaries, parent and affiliated companies and the officers, directors, employees, agents and servants of all of them from and against any claims, liability, expenses, attorneys fees, and costs of defense to the extent permitted by law for:

1. Damage to property owned by, in the possession of, or leased by Customer, and/or the well owner (if different from Customer), including, but not limited to, surface and subsurface damage. The term "well owner" shall include working and royalty interest owners.
2. Reservoir, formation, or well loss or damage, subsurface trespass or any action in the nature thereof.
3. Personal injury or death or property damage (including, but not limited to, damage to the reservoir, formation or well), or any damages whatsoever, growing out of or in any way connected with or resulting from pollution, subsurface pressure, losing control of the well and/or a well blowout or the use of radioactive material.

The defense, indemnity, release and hold harmless obligations of Customer provided for in this Section b) and Section c) below shall apply to claims or liability even if caused or contributed to by Halliburton's negligence, strict liability, or the unseaworthiness of any vessel owned, operated, or furnished by Halliburton or any defect in the data, products, supplies, materials, or equipment of Halliburton whether in the preparation, design, manufacture, distribution, or marketing thereof, or from a failure to warn any person of such defect. Such defense, indemnity, release and hold harmless obligations of Customer shall not apply where the claims or liability are caused by the gross negligence or willful misconduct of Halliburton. The term "Halliburton" as used in said Sections b) and c) shall mean Halliburton, its divisions, subsidiaries, parent and affiliated companies, and the officers, directors, employees, agents and servants of all of them.

c) That because of the uncertainty of variable well conditions and the necessity of relying on facts and supporting services furnished by others, Halliburton is unable to guarantee the effectiveness of the products, supplies or materials, nor the results of any treatment or service, nor the accuracy of any chart interpretation, research analysis, job recommendation or other data furnished by Halliburton. Halliburton personnel will use their best efforts in gathering such information and their best judgment in interpreting it, but Customer agrees that Halliburton shall not be liable for and Customer shall indemnify Halliburton against any damages arising from the use of such information.

d) That Halliburton warrants only title to the products, supplies and materials and that the same are free from defects in workmanship and materials. THERE ARE NO WARRANTIES, EXPRESS OR IMPLIED, OF MERCHANTABILITY, FITNESS OR OTHERWISE WHICH EXTEND BEYOND THOSE STATED IN THE IMMEDIATELY PRECEDING SENTENCE. Halliburton's liability and Customer's exclusive remedy in any cause of action (whether in contract, tort, breach of warranty or otherwise) arising out of the sale or use of any products, supplies or materials is expressly limited to the replacement of such products, supplies or materials on their return to Halliburton or, at Halliburton's option, to the allowance to the Customer of credit for the cost of such items. In no event shall Halliburton be liable for special, incidental, indirect, punitive or consequential damages.

e) That Customer shall, at its risk and expense, attempt to recover any Halliburton equipment, tools or instruments which are lost in the well and if such equipment, tools or instruments are not recovered, Customer shall pay Halliburton its replacement cost unless such loss is due to the sole negligence of Halliburton. If Halliburton equipment, tools or instruments are damaged in the well, Customer shall pay Halliburton the lesser of its replacement cost or the cost of repairs unless such damage is caused by the sole negligence of Halliburton. In the case of equipment, tools or instruments for marine operations, Customer shall, in addition to the foregoing, be fully responsible for loss of or damage to any of Halliburton's equipment, tools or instruments which occurs at any time after delivery to Customer at the landing until returned to the landing, unless such loss or damage is caused by the sole negligence of Halliburton.

NOV 5 1990

f) To waive the provisions of the Deceptive Trade Practices - Consumer Protection Act, to the extent permitted by law.

g) That this contract shall be governed by the law of the state where services are performed or materials are furnished.

h) That Halliburton shall not be bound by any changes or modifications in this contract, except where such change or modification is made in writing by a duly authorized executive officer of Halliburton.

I HAVE READ AND UNDERSTAND THIS CONTRACT AND REPRESENT THAT I AM AUTHORIZED TO SIGN THE SAME AS CUSTOMER'S AGENT.

SIGNED [signature] CUSTOMER

DATE 10-19-90

TIME 2:00 A.M. P.M.

We certify that the Fair Labor Standards Act of 1938, as amended, has been complied with in the production of goods and/or with respect to services furnished under this contract.

ATLAS WIRELINE SERVICES
Western Atlas International

SERVICE ORDER

CUSTOMER ORDER NO.

SERVICE ORDER NO 36225

CUSTOMER NAME: O'Brien Operating Co

LOCATION NAME: Shreveport

ATTENTION / INVOICE ADDRESS: PO Box 6000 Shreveport LA 71136-6000

PRICE SCHEDULE

WELL ID: Parnell #2

CITY

WELL NO: 02

LEGAL

JOB TIME	DATE	TIME
	11/07	1100
	11/07	1130
	11/07	1430
	11/07	1800
		2330
		0
		0
		2

DATE	TIME				
11/7		Pres Swab			
11/7		Off 2145 Pres			
11/7		100 255 - 5512	4	12	70
11/7		100 555 - 5542	4	27	45
		990 Disc Price Accept		2944	55
		990 Disc Price Accept		3911	55

I certify that the above services, materials and/or products have been received.

CUSTOMER SIGNATURE: [signature] DATE

AWS ENG SIGNATURE: B. Moe DATE 11/7/90

SUB TOTAL

ESTIMATED TOTAL

PRICES SUBJECT TO CORRECTION. TAX NOT INCLUDED.

RECEIVED TAPE	INITIALS
TAPE COPY	
FILM	
FIELD PRINTS	

COMMENTS

AWS APPROVAL

WA 1295 DISTRIBUTION: ORIGINAL BILLING CANARY CUSTOMER—INVOICE PINK CUSTOMER LOCATION BLUE AREA OFFICE WHITE DISTRICT FILE GOLD EXTRA

ATW-317

5M—8-74—1202—C.P.Co.

AOGC-2-(56)

03 139- 12,844

ARKANSAS OIL AND GAS COMMISSION
El Dorado, Arkansas

Serial No. 34,337

Notice of Intention to Drill For Oil or Gas

(This application to drill must be accompanied by a remittance of $50.00)

Date August 30, 1990

Name of Operator O'Brien Operating Co.

Send Permit to: Street P.O. Box 6020

City Shreveport

State Louisiana 71136-6020

Lease Name John Parnell Well No. 2

Acres in lease

Number of acres in and description of drilling unit 80 acres Stand-up Unit
W/2 NW 1/4

Location of proposed well (Must agree with Surveyor's Plat) 1000' FWL & 2000' FNL

Section 13 Township 17S Range 16W

County Union Field ~~East Lisbon~~ AGNES RD. NORTH

Distance and direction from the nearest town 2 miles NW of El Dorado

Distance from proposed location to nearest drilling, completed or applied for well 9.14.90 MAP

Rotary or cable tools Rotary Date work will start September 1990

Name of drilling or workover contractor Shuler Drilling

750' Depth to be drilled 6000'

1703' Formation you propose to complete in Cotton Valley

800'-700' Remarks:

RECEIVED SEP 5 1990 ARKANSAS OIL & GAS COMMISSION

CERTIFICATE

I declare under the penalties of perjury that this report has been examined by me and to the best of my knowledge is true, correct and complete.

J.R. Gordon - Production Manager

SECTION 13 , TOWNSHIP 17 SOUTH, RANGE 16 WEST

UNION COUNTY, ARKANSAS

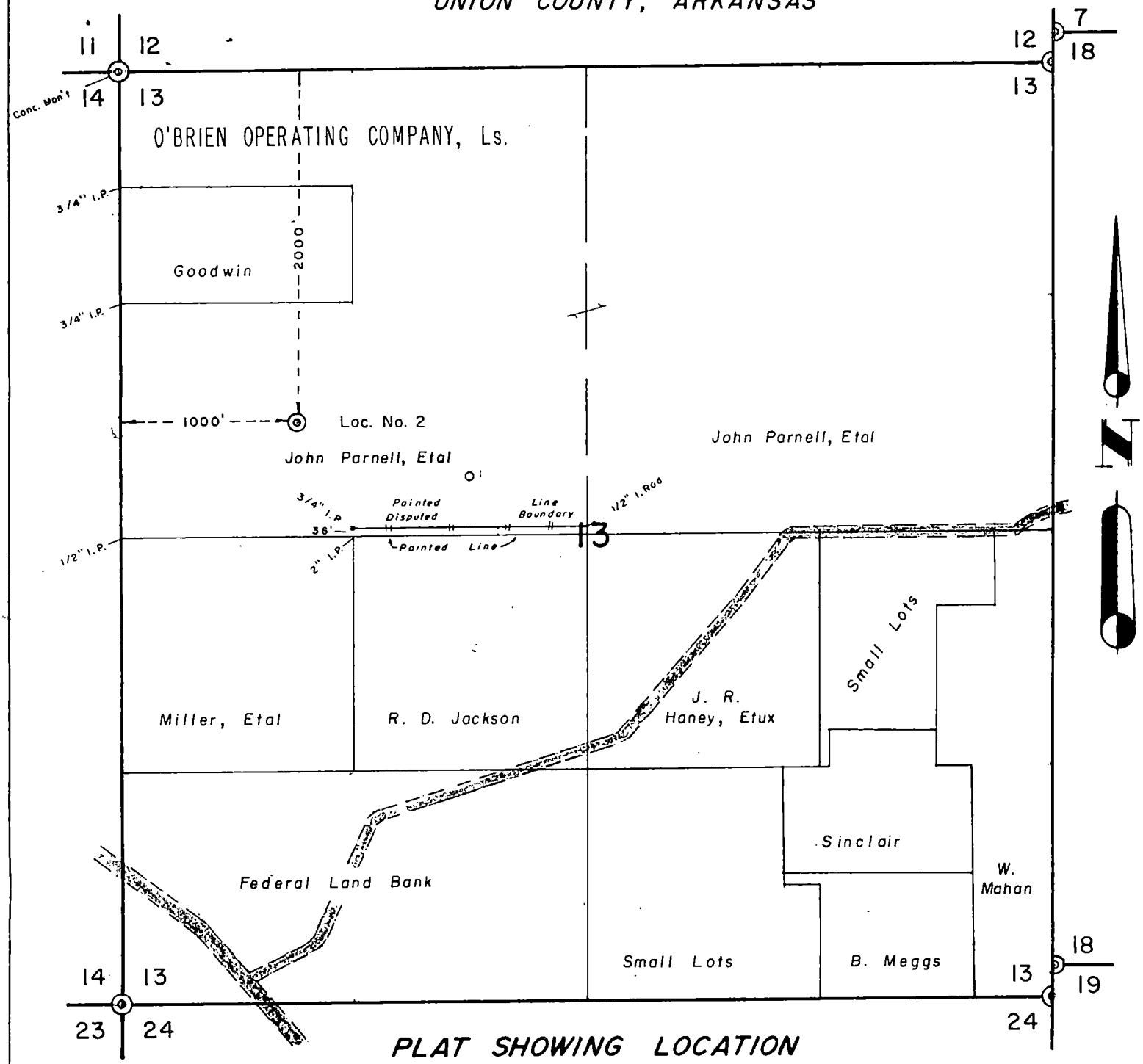

PLAT SHOWING LOCATION

O'BRIEN OPERATING COMPANY —— JOHN PARNELL, ETAL No. 2

Located 2000 ft. from the North line and 1000 ft. from the West line

of Section 13 Township 17 South, Range 16 West,

Union County, Arkansas

RECEIVED

SEP 5 1990

ARKANSAS OIL & GAS COMMISSION

MARVIN T. KENT
REGISTERED
LAND SURVEYOR
STATE OF
ARKANSAS
NO. 657

I HEREBY CERTIFY THAT THE ABOVE PLAT CORRECTLY REFLECTS THIS LOCATION AS STAKED ON THE GROUND.

Marvin T. Kent
SIGNATURE

MARVIN T. KENT
REG. LAND SURVEYOR, ARK. REG. NO. 657
PHONE 425-7973, SHREVEPORT, LA.

Ground Elevation No. 2= 252.8 ft.

506
77

DATE: Aug. 22, 1990

SCALE: 1" = 800'

A F F I D A V I T
OF FINANCIAL RESPONSIBILITY

STATE OF LOUSIANA §
§ KNOW ALL MEN BY THESE PRESENTS, THAT:
PARISH OF CADDO §

BEFORE ME, the undersigned Notary Public, duly qualified and acting as such in and for the above Parish, State aforesaid, on this day personally appeared WILLIAM J. O'BRIEN, III, President and Chief Executive Officer of O'Brien Operating Company, known to me to be said person and officer, and, after being duly sworn, did state and declare, in his stated capacity, that O'Brien Operating Company, a Louisiana corporation, whose business address is Post Office Box 6020, Shreveport, Louisiana 71136-6020, owns assets within the State of Arkansas in excess of liabilities in an amount sufficient to enable it to comply fully with Acts 1983, No. 902 of the State of Arkansas as by law required.

THUS DONE and PASSED before me, the undersigned Notary Public, in the City of Shreveport, Caddo Parish, Louisiana, in the presence of the undersigned competent witnesses, on this 4th day of September, 1990.

WITNESSES:

O'BRIEN OPERATING COMPANY

BY: William J. O'Brien III
WILLIAM J. O'BRIEN, III
President and
Chief Executive Officer

Janin Hudson Jones
JANIN HUDSON JONES, Notary Public
Caddo Parish, Louisiana
My Commission is for Life

RECEIVED
SEP 5 1990
ARKANSAS OIL & GAS COMMISSION

O'BRIEN OPERATING COMPANY

September 5,1990

Arkansas Oil & Gas Commission
P.O. Box 1472
El Dorado, AR 71731-1472

Re: **NOTICE OF INTENTION TO DRILL**
John Parnell et al No. 2
Section 13 - T 17S - R 16W
Union County, Arkansas

Gentlemen:

Enclosed please find the following material relative to the referenced well:

1. Notice of Intention To Drill;
2. Surveyor's Plat;
3. O'Brien Operating Company Check for $150.00;
4. Affidavit of Financial Responsibility.

We hope you will find everything in order, and should you have any questions, please call.

Very truly yours,

O'BRIEN OPERATING COMPANY

J. R. Gordon
Production Manager

RECEIVED
SEP 5 1990
ARKANSAS OIL & GAS COMMISSION

JRG/jlw

Enclosures

MAILING ADDRESS: P. O. BOX 6020 • SHREVEPORT, LA. 71136-6020 TELEPHONE: (318) 869-3247
STREET ADDRESS: 5925 LINE AVENUE • SHREVEPORT, LA. 71106 FACSIMILE: (318) 868-9835

ARKANSAS
ENERGY & ENVIRONMENT

February 25, 2020

Mr. Steve Rogers
Crude Oil, LLC
270 Meadow Hills
El Dorado, AR 71730

Re: Parnell 1, PN 33912
Parnell 2 SWD, PN 34337
Agnes Road North Field
Union County, AR

Dear Mr. Rogers,

I have received an email from Mr. Martin Parnell King regarding the two above referenced wells which he purports to be located on property of his family. Having received his email, I reviewed the well and production files for both wells. Our records indicate that the production of oil ceased in May, 1991. Our records also indicate that the Class II disposal well has not demonstrated integrity within the required timeframe. A letter in the files from 2018 further indicates that we have discussed this matter in the past however at that time, I failed to follow up with you on it.

It would appear that both wells should now be plugged, any remaining equipment removed and the surface restored. If you do not wish to plug the Parnell wells, given the amount of time which has elapsed since last production, it will be necessary to file an application for hearing should you wish to temporary abandon these wells for any additional period of time. Please review your records as necessary and respond in writing to me within 30 days of your decision to plug the Parnell 1 and 2 wells or seek a temporary abandon status through the hearing process. If you wish to discuss this matter, please contact me at your earliest convenience.

Sincerely,

Gary D. Looney

Gary D. Looney
Assistant Director, Oil and Gas Commission
El Dorado Regional Office
P.O. Box 11510, 2215 W. Hillsboro El Dorado, AR 71730
Phone: (870) 862-4965

ARKANSAS OIL AND GAS COMMISSION

INJECTION WELL INSPECTION REPORT (FIR 6)

Permit No: 34337

Purpose of Report: ○ MIT ◉ Monitor ○ CBL ○ RAT ○ Cement Csg. ○ Vessels

Operator: Crude Oil, LLC **Date:** 05-03-2018

Well Name/Number: Parnell, John 2 **Class:** 2D

Field: AGNES ROAD NORTH **County:** UNION

Sec: 13 **Twp:** 17S **Range:** 16W **GPS Well Location:** **Latitude:** 33.24589 **Longitude:** -92.71439

Is Sign present and correct: ○ Yes ◉ No **Notify operator** ☐

Is Well: ○ Active ○ Inactive ◉ Shut-In

Well Pressure Test (MIT)

Packer set at: Ft.

MSIP: PSIG *(from AOGC permit)* **Tubing pressure:** 0 PSIG **Vacuum:** 0 Inches

START		STOP		PRESSURE DIFFERENCE	P/F
Time	Pressure	Time	Pressure		
	0		0	0	
	0		0	0	

Annulus Monitor Inspection

Time observed: 03:45:00 ○ AM ◉ PM **Tubing pressure:** 0 PSIG 0Vacuum 0 Inches

Annulus pressure: 0 PSIG 0Vacuum 0 Inches

○ Yes ○ No ◉ NA **Well mechanical integrity satisfactory.**

Cement Casing

○ Surface ○ Production ○ Liner **Size:** 0 **Cement company:**

Did cement circulate to surface: ○ Yes ○ No ◉ NA **If yes, give estimate of returns:** 0 bbls

CBL

Interval logged: From: 0 To: 0 **Service company:**

RAT

Interval logged: From: 0 To: 0 Service company:

○ Yes ○ No ◉ NA Well mechanical integrity satisfactory.

No	Type	Construction	Size	Leaks	Remarks
No Vessels Found For This Inspection					

Tank Containment: ○ Earthen ○ Metal ring ○ Tank in tank ◉ No Tanks ○ Other

Dimensions: Length: 0 Width: 0 Diameter: 0 Height: 0 Capacity (bbls): 0

Capacity compliance: ○ Yes ○ No ◉ NA

Breaches/Erosion: ○ Yes ○ No ◉ NA

Excessive vegetation present: ○ Yes ○ No ◉ NA

Compliance agreement ○ Yes ○ No ◉ NA

Containment Conditions: ○ Yes ◉ No

Fluids Present: ○ Produced fluids ○ Storm water ○ Waste oil ◉ NA ○ Other

Entry Gate Present: ◉ Yes ○ No Gate locked on arrival: ◉ Yes ○ No Gate locked on departure: ◉ Yes ○ No

Compliance Summary Remarks:

I could not get to this well due to a locked gate .

Company rep: Inspector: BILLY HANEY

Inspected by:

Review for NNC or NOV: ○ Yes ◉ No If yes, check one ○ NNC ○ NOV ○ DNI ◉ NA Ref #: Date:

ADEQ referral: ○ Yes ◉ No Date of referral:

Rev 05/15

ARKANSAS OIL AND GAS COMMISSION

Submit Form To
Headquarters Office
2215 West Hillsboro
El Dorado, Arkansas 71730

FORM 23
NOTIFICATION OF WELL TRANSFER OR NAME CHANGE

☐ Individual Well Transfer ☑ Lease/Unit Transfer ☐ Unitized Area ☐ Well Name Change

A Well Information

Permit No	Well Name	No
33912 34337	Farwell 1 & 2	

Sec	Twp	Rge	County	Field
13	17S	16W	UNION	Agnes Road North

B Lease/Unit Information

Lease/Unit/Unitized Area Name	Total Number of Wells in Transfer
Farwell Lease	2
County	**Field**
UNION	Agnes Road North

Attach map showing lease/unit/unitized boundaries, with well location(s), and list of wells with permit numbers and location descriptions to be transferred

C New Operator

New Operator Name	Contact Person
Crude C LLC	Steve Rogers

Address	City	State	Zip
270 Meadow Hills	El Dorado	AR	71730

Phone No	Fax No	E-mail
	870 875 2327	

LOTT (Name of Purchaser) whose address is

School St (Street) El Dorado (City) AR (State) 71730 (Zip)

is authorized to purchase 100 % of the ☒ Oil ☐ Gas produced from well or lease designated in Section A or B until further notice

Other purchasers purchasing oil or gas from this well or lease _____ %
_____ %

I acknowledge, as the new operator, I am responsible for ensuring compliance with all requirements of the Arkansas Oil and Gas Commission rules and regulations

Name Steve Rogers Title Manager

Signature Steve Rogers Date 7/25/08

D Current Operator:

Current Operator Name	Contact Person

Address	City	State	Zip

Phone No	Fax No	E-mail

Name _____ Title _____

Signature _____ Date _____

E. Well Name Change.

Original Well Name	New Well Name

Justification for requesting well name change
Attach list for more than one well name change

F TRANSFER APPROVED

(Commission Representative) (Date)

Revised 4/06

Permit #	Well Name & Number	Location
33912	Parnell, John Etal 1	13-17S-16W
34337	Parnell, John 2	13-17S-16W

ARKANSAS OIL AND GAS COMMISSION
P O BOX 1472 2215 WEST HILLSBORO
EL DORADO, AR 71731-1472

INJECTION WELL INSPECTION

OPERATOR John C. Rogers / MOGC DATE 10-7 - 2002

LEASE John Parnell WELL NO 2 FIELD Bynes Rd North

COUNTY Union SEC 13 TWP 17 RGE 16

LOCATION

DIRECTIONS TO WELL

ANNULUS MONITOR INSPECTION

STATUS SHUT IN _____ TUBING PRESSURE _____ psig/vacuum _____ in

OPERATING _____ ANNULUS PRESSURE _____ psig/vacuum _____ in

TIME OBSERVED _____ A M /P M

RESULTS

WELL PRESSURE TEST

STATUS SHUT IN X

OPERATING _____

TIME HOUR	TIME MINUTES	CASING ANNULUS PSIG
2	45	440
3	15	420

PACKER DEPTH _____

REMARKS 5.9 BBLs to Fill up

RESULTS OF TEST

X WELL MECHANICAL INTEGRITY SATISFACTORY

_____ WELL MECHANICAL INTEGRITY NOT VERIFIED

_____ CASING ANNULUS NOT HOLDING PRESSURE FOR TEST PERIOD

_____ RESCHEDULE TEST FOR DATE OF

_____ WELL SHOULD BE REPAIRED AND RETESTED

_____ WELL SHOULD BE SHUT IN

Kenny Shelton
~~OPERATOR REPRESENTATIVE~~
Witness

St Stunkel
INSPECTOR

BancorpSouth®

April 25, 2008

Arkansas Oil & Gas Commission
El Dorado, Ar 71730

To Whomever It May Concern

I, David Skinner, representing BancorpSouth Bank, sold equipment associated with the Parnell lease, wells #1 & #2, to Mr Jim Phillips and Mr Mickey Berg somewhere around the years of 2000 – 2002

Sincerely,
David Skinner

P O Box 751 • El Dorado, AR 71731-0751 • 870-863-3181

Prepared by
Steve Rogers
270 Meadow Hills
El Dorado, Arkansas 71730

2008 3177
Recorded in the Above
Deed Book & Page
04-02-2008 09:17:59 AM
Cheryl Cochran-Wilcox Circ Clerk
Union County, AR
Book/Pg: 2008/3177
Term Cashier: UCCC-E2 / LHIMSON
Tran: 3+3.124102.148577
Recorded: 04-02-2008 09:18:42
Fee Deed 25.00
FEC Recording Fee 2.00
Total Fees: $ 25.00

OIL AND GAS LEASE
(PAID UP)

THIS AGREEMENT is made and entered into this 20th day of February, 2008, between

MONICA KING, INDIVIDUALLY, AND AS AGENT AND ATTORNEY IN FACT FOR LOUIS PARNELL KING,

wife and husband

301 Wintergreen Court, Weatherford TX 76085 hereinafter called **Lessor** (whether one or more), and

STEVE ROGERS, 270 Meadow Hills, El Dorado, Arkansas, 71730, hereinafter called **Lessee**

WITNESSETH That the said Lessor, for and in consideration of ten and other valuable considerations ($10 00 OVC) DOLLARS cash in hand paid, the receipt of which is hereby acknowledged, and of the covenants and agreements hereinafter contained on the part of Lessee to be paid, kept, and performed, has GRANTED, DEMISED, LEASED and LET, and by these presents does GRANT, DEMISE, LEASE and LET unto the said Lessee, for the sole and only purpose of exploring by geophysical and other methods, mining and operating for oil (including but not limited to distillate and condensate), gas (including casinghead gas and helium and all other constituents), and for laying pipelines and building tanks, powers, stations, and structures thereon, to produce, save, and take care of said products, all that certain tract of land, together with any reversionary rights therein, situated in the State of Arkansas, and described as follows, to-_wit

County Union **Section** 13 **Township** 17 South **Range** 16 West

SECTION 13 The East Half of the Northwest Quarter, 80 acres, and
The Southwest Quarter of the Northwest Quarter, 40 acres, and
The North Half of the Northwest Quarter of the Northwest Quarter, 20 acres

and containing 140 0 acres, more or less In addition to the land above described, Lessor hereby grants, leases, and lets exclusively unto Lessee, to the same extent as if specifically described herein, all lands owned or claimed by Lessor which are adjacent, contiguous to, or form a part of the lands above particularly described, including all oil, gas, and their constituents underlying lakes, rivers, streams, roads, easements and rights-of-way which traverse or adjoin any of said lands

1 It is agreed that this lease shall remain in force for a term of THREE (3) years from date (herein called *primary term*) and as long thereafter as oil or gas, or either of them, is produced from said land by the Lessee, and as long thereafter as operations, as hereinafter defined, are conducted upon said land with no cessation for more than ninety (90) consecutive days Whenever used in this lease the word "operations" shall mean operations for and any of the following drilling, testing, completing, reworking, recompleting, deepening, plugging back or repairing of a well in search of or in an endeavor to obtain production of oil, gas, or other minerals, or production of oil, gas, or other minerals, whether or not in paying quantities If while this lease is in force, at, or after the expiration of the primary term hereof, it is not being continued in force by reason of the shut-in well provisions hereinafter stated, and Lessee is not conducting operations on said land by reason of (1) any law, order, rule or regulation (whether or not subsequently determined to be invalid), or (2) any other cause, whether similar or dissimilar, (except financial) beyond the reasonable control of Lessee, the primary term hereof shall be extended until the first anniversary date hereof occurring ninety (90) or more days following the removal of such delaying cause, and this lease may be extended thereafter by operations as if such delay had not occurred

2 In consideration of the premises, the said Lessee covenants and agrees
- A To deliver to the credit of Lessor the one-eighth (1/8) part of all oil (including but not limited to condensate and distillate) produced and saved from the leased premises,
- B To pay Lessor for gas of whatsoever nature or kind (with all of its constituents) produced and sold or used off the leased premises, or used in the manufacture of products therefrom, one-eighth (1/8) of the proceeds received for the gas sold, used off the premises, or in the manufacture of products therefrom, but in no event more than one-eighth (1/8) of the actual amount received by the Lessee, said payments to be made monthly,
- C To pay Lessor for gas produced from any oil well and used off the premises, or for the manufacture of casinghead gasoline or dry commercial gas, one-eighth (1/8) of the proceeds, at the mouth of the well, received by Lessee for the gas during the time such gas shall be used, said payments to be made monthly,
- D Lessee is authorized to deduct from such proceeds the cost incurred in compressing, treating, dehydrating, marketing and transporting such oil, gas and/or casinghead gas for delivery in computing the proceeds at the well payable as royalty, and
- E That all royalties, shut-in royalties, or other sums which may become payable to Lessor under the terms of this lease may be paid or tendered by cash, check, draft, electronic funds transfer, or any other commercially reasonable method, which Lessee may elect from time to time

3 If, at the expiration of the primary term or at any such time or times thereafter, there is any well on said land or on lands with which such land or any portion thereof has been pooled, capable of producing oil or gas, and all such wells are shut-in, this lease shall, nevertheless, continue in force as though operations were being conducted on said land for so long as said wells are shut-in, and thereafter this lease may be continued in force as if no shut-in had occurred Lessee shall

not be obligated to install or furnish facilities other than well facilities and the ordinary lease facilities of flow lines, separator, and lease tank, and shall not be required to settle labor trouble or to market gas upon terms unacceptable to Lessee If, at any time or times after the expiration of the primary term all such wells are shut-in for a period of ninety consecutive days, and during such time there are no operations on said land, then at or before the expiration of said ninety day period, Lessee shall pay or tender as royalty, a sum equal to one dollar ($1 00) per year per net royalty acre covered hereby Lessee shall make like payments or tenders on or before the end of each anniversary of the expiration of said ninety day period if upon such anniversary this lease is being continued in force solely by reason of the provisions of this paragraph

4 Lessee is hereby granted the right at any time and from time to time to unitize the leased premises or any portion or portions thereof, as to all strata or any stratum or strata, with any other lands, as to all strata or any stratum or strata, for the production primarily of oil or primarily of gas with or without distillate However, no unit for the production primarily of oil shall embrace more than 160 acres, or for the production primarily of gas, with or without distillate, more than 640 acres, provided that if any governmental regulation shall prescribe a spacing pattern for the development of the field or allocate a producing allowable based on acreage per well, then any such unit may embrace as much additional acreage as may be so prescribed or as may be used in such allocation of allowable Operations upon and production from the unit shall be treated as if such operations were upon or such production was from the leased premises whether or not the well or wells are located thereon The entire acreage within a unit shall be treated for all purposes as if it were covered by and included in this lease except that the royalty on production from the unit shall be as below provided, and except that in calculating the amount of any shut-in gas royalties only that part of the acreage originally leased and then actually embraced by this lease shall be counted In respect to production from the unit, Lessee shall pay Lessor, in lieu of other royalties thereon, only such proportion of the royalties stipulated herein as the amount of his acreage placed in the unit, or his royalty interest therein on an acreage basis bears to the total acreage in the unit. Lessee shall file written unit designations in the county in which the leased premises are located Notwithstanding the limitation that a production unit for oil cannot exceed 160 acres, or a production unit for gas cannot exceed 640 acres, Lessee, as the agent for Lessor, is granted the right to execute all necessary ratifications of any unit agreement and/or unit operating agreements as may be necessary to obtain the approval of the Arkansas Oil & Gas Commission for the creation of a field-wide unit without regard to the size of such field-wide unit

5 If said Lessor owns a less interest in the above described land than the entire and undivided fee simple estate therein, then the royalties herein provided shall be paid to the Lessor only in the proportion which his interest bears to the whole and undivided fee

6 Lessee shall have the right to use, free from cost, gas, oil, and water produced on said land for its operations thereon, except water from wells of Lessor

7 When requested by the Lessor, Lessee shall bury his pipelines below plow depth

8 No well shall be drilled nearer than 200 feet to any house or barn now on said premises without the written consent of the Lessor

9 Lessee shall pay for all damages caused by its operations inclusive of land, property and growing crops on said land

10 Lessee shall have the right at any time to remove all machinery and fixtures placed on said premises, including the right to draw and remove casing

11 If the estate of either party hereto is assigned, and the privilege of assigning in whole or in part is expressly allowed, the covenants hereof shall extend to their heirs, executors, administrators, successors, or assigns However, no change or division in ownership of the land or royalties shall enlarge the obligations or diminish the rights of Lessee No change in the ownership of the land or royalties shall be binding on the Lessee until after the Lessee has been furnished with a written transfer or assignment or a true copy thereof In case Lessee assigns this lease, in whole or in part, Lessee shall be relieved of all obligations with respect to the assigned portion or portions arising subsequent to the date of assignment

12 All express or implied covenants of this lease shall be subject to all Federal, State, and Municipal laws, Executive Orders, Rules, and Regulations, and this lease shall not be terminated in whole or in part, nor Lessee held liable in damages, for failure to comply therewith if compliance is prevented by or such failure is the result of any such Law, Order, Rule, or Regulation

13 This lease shall be effective as to each Lessor on execution hereof as to his or her interest and shall be binding on those signing, notwithstanding some of the Lessors above named may not join in the execution hereof The word Lessor as used in this lease means the party or parties who execute this lease as Lessor although not named above

14 Lessee may at any time and from time to time surrender this lease as to any part or parts of the leased premises by delivering or mailing a release thereof to Lessor, or by placing a release of record in the proper County

15 Lessor hereby warrants and agrees to defend the title to the lands herein described, and agrees that the Lessee shall have the right at any time to redeem for Lessor, by payment, any mortgages, taxes, or other liens on the above described lands, in the event of default of payment by Lessor, and be subrogated to the rights of the holder thereof

16 Lessor hereby surrenders and releases all rights of dower and of courtesy and of homestead in the premises described herein, insofar as said rights of dower and of courtesy or of homestead may in any way affect the purposes for which this lease is made, as recited herein

IN WITNESS WHEREOF we sign the day and year first above written

Monica K King

Monica King, Individually and As Agent and Attorney In Fact for Louis Parnell King

Soc Sec No _____

2008 3179
Recorded in the Above
Deed Book & Page
04-02-2008 09:17:59 AM
Cheryl Cochran-Wilson Circ Clerk
Union County, AR

STATE OF TEXAS §

COUNTY OF Parker §

ACKNOWLEDGMENT

BE IT REMEMBERED, that on this the 11 day of March, 2008, before me, a Notary Public duly commissioned and acting in and for said County and State appeared Monica King, to me well known as the Lessor in the foregoing instrument, and stated that she had executed the same for the purposes and consideration therein mentioned and set forth

IN WITNESS WHEREOF, I have set my hand and seal as such Notary Public on the day and year first written above

DAVID L PAYNE
Notary Public
STATE OF TEXAS
My Comm Exp June 22, 2009

Notary Public
Notary's Commissions Expires 6/22/09

Union County, AR
I certify this instrument was filed on
04-02-2008 09:17:59 AM
and recorded in Deed Book
2008 at Pages 3177 - 3179
Cheryl Cochran-Wilson Circ Clerk
By: Linda Hinson

Lot Frank Borden

ARKANSAS OIL AND GAS COMMISSION
2215 WEST HILLSBORO
P. O. BOX 1472
EL DORADO, ARKANSAS 71731-1472

ORDER NO. 513A-2007-07 **November 02, 2007**

AGNES ROAD NORTH FIELD
Union County, Arkansas

WELL ABANDONMENT

After due notice, followed by a public hearing held in El Dorado, Arkansas, on October 23, 2007, the Arkansas Oil and Gas Commission has, following said hearing, found the following facts and ordered the following wells abandoned

FINDINGS OF FACT

From the evidence introduced at said hearing, the Commission finds

1 The wells located in Section 13, Township 17 South, Range 16 West, in the Agnes Road North Field, Union County, which are the subject of the Order below, are the

a Parnell, John, Et Al #1
b Parnell, John #2

2 That the last operator of record for the well enumerated in Finding 1 above, is John C. Rogers

3 That the last production from any of the wells enumerated in Finding No 1 above was in excess of twenty-four months ago

4 That the last known address for John C Rogers, as listed on the Arkansas Oil and Gas Commission Forms 1 is 511 N College Ave , El Dorado, Arkansas 71730

5 That notice of this hearing was sent to John C Rogers by first class mail

6. That notice was published in newspapers of general circulation in Union County

7. That John C Rogers did not present himself at the hearing

8 That the wells enumerated in Finding 1 have been abandoned by their operator, John C Rogers

CONCLUSIONS OF LAW

1 That due notice of public hearing was given as required by law and that this Commission has jurisdiction over said parties and the matter herein considered

2 That this Commission has authority to grant said petition under the provisions of Arkansas Code Annotated 15-71-110 and 15-72-217

ORDER

It is, therefore, ordered by the Commission that the well site enumerated in Finding 1 be declared abandoned and be plugged or re-plugged and surface conditions surrounding the well site be restored in accordance with Arkansas Code Annotated 15-72-217 However, in lieu of plugging the wells, the Director of Production and Conservation shall have authority to transfer the wells to another operator in accordance with all applicable Commission rules

This Order shall be effective from and after November 02, 2007, and the Commission shall have continuing jurisdiction for the purposes of enforcement, and/or modifications or amendments to the provisions of this Order

ARKANSAS OIL AND GAS COMMISSION

Lawrence Bengal,
Director of
Production and Conservation

It is so Ordered by the Commission

Chad White, Chairman
W Frank Morledge, Vice-Chairman
Charles Wohlford
Bill Poynter
Mike Davis
Ken Williams
Carolyn Pollan
William L Dawkins
Jerry Langley

O'BRIEN OPERATING COMPANY

October 7, 1991

Arkansas Oil and Gas Commission
P.O. Box 1472
El Dorado, AR 71731-1472

Attention: Mr. Martin T. Perdue

Re: John Parnell NO. 2
Sec. 13-17S-16W
Agnes Road North Field
Union County, Arkansas

Dear Marty:

Enclosed please find the following materials regarding the above referenced well:

1. Schlumberger Service Ticket

2. Well Completion and Recompletion Report

3. Schlumberger Tracer Survey

We hope that you will find everything in order, but should you need more information, please advise.

Very truly yours,

O'BRIEN OPERATING COMPANY

Morgan P. O'Brien

Morgan P. O'Brien
Executive Vice President

MPO/jlw

Enclosures

MAILING ADDRESS P O BOX 6020 • SHREVEPORT, LA 71136-6020 TELEPHONE (318) 869-3247
STREET ADDRESS 5925 LINE AVENUE • SHREVEPORT, LA 71106 FACSIMILE (318) 868-9835

SCHLUMBERGER WELL SERVICES

A Division of Schlumberger Technology Corporation

P O BOX 2175 • HOUSTON, TEXAS 77252-2175

SERVICE REPORT—RULE B - 31

STATE OF ARKANSAS—OIL AND GAS COMMISSION

DATE: 10/4/91

COMPANY: O'Brien Operating Co

ADDRESS: PO Box 6020 | CITY: Shreveport | STATE: La 71136-6020

WELL: 2 John Parnell

FIELD: ~~E. Lisbon~~ Agnos Pond North | COUNTY: Union

LOGGING RECORD

DEPTH LOGGED		TYPE OF LOG
5510		JB
5490		BP CDB
4590		RTS

PERFORATING RECORD

DEPTH PERFORATED		NO OF SHOTS	DEPTH PERFORATED		NO. OF SHOTS
4590	4375	61			

BRIDGE PLUG RECORD

SETTING DEPTH		SIZE AND TYPE	SETTING DEPTH		SIZE AND TYPE

LOCATION: Shreveport | ENGINEER: Edington

SWS—1281 B

DISTRIBUTION – COMPANY | OIL AND GAS COMMISSION—BOX 719, EL DORADO

DIVISION | LOCATION

O'BRIEN OPERATING COMPANY
JOHN PARNELL NO. 2 SALTWATER DISPOSAL WELL
AGNES ROAD NORTH FIELD
SEC. 13 T17S R16W
UNION COUNTY, ARKANSAS

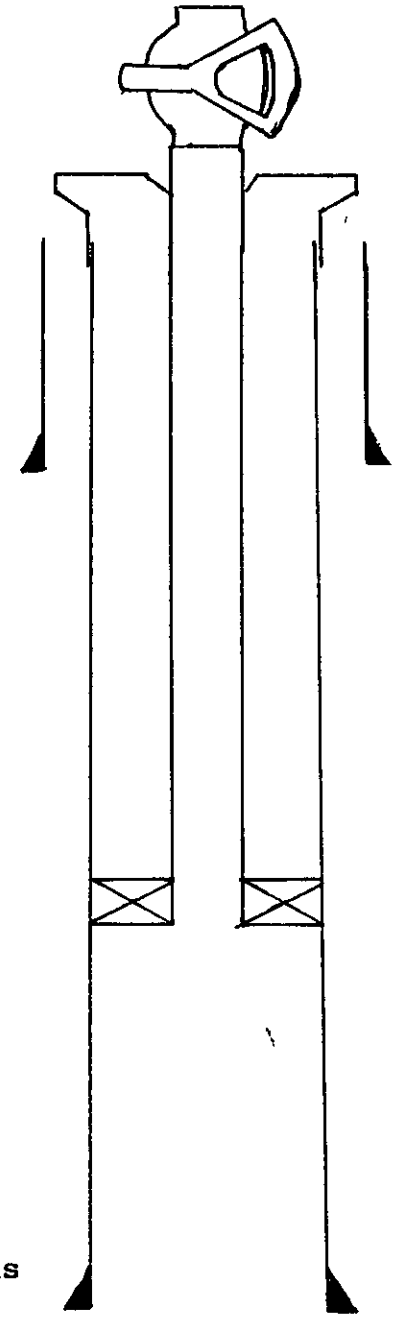

2-7/8" 2000 PSIG Gate Valve

5-1/2" x 2-7/8" Larkin Tubing Hea

8-5/8" 22# Casing Set
at 762' w/350 sx cement

2-7/8" 6.5# J-55 Tbg

- Top of Cement at 3845'

Tension Packer Set at 4473'

Disposal Perforations
4574'-92'

Potential overall disposal
Interval 4570'-4635'

CIBP w/10' Cement at 5400'

Old Production Perforations
5533'-42'

5-1/2" 15.5# casing set at
5730' w/665 sx Cement

RECEIVED
JUL 19 1991
ARKANSAS OIL & GAS COMMISSION

ARKANSAS OIL AND GAS COMMISSION
P O BOX 1472 2215 WEST HILLSBORO
EL DORADO, AR 71731-1472

INJECTION WELL INSPECTION

OPERATOR John C. Rogers / MDGC DATE 10-7 - 2002

LEASE John Parnell WELL NO 2 FIELD Barnes Rd North

COUNTY Union SEC 13 TWP 17 RGE 16

LOCATION

DIRECTIONS TO WELL

ANNULUS MONITOR INSPECTION

STATUS SHUT IN _____ TUBING PRESSURE _____ psig/vacuum _____ in

OPERATING _____ ANNULUS PRESSURE _____ psig/vacuum _____ in

TIME OBSERVED _____ A M /P M

RESULTS

WELL PRESSURE TEST

STATUS SHUT IN X

OPERATING _____

TIME HOUR	TIME MINUTES	CASING ANNULUS PSIG
2	45	440
3	15	420

PACKER DEPTH _____

REMARKS 5.9 BBLs to Fill up

RESULTS OF TEST

X WELL MECHANICAL INTEGRITY SATISFACTORY

_____ WELL MECHANICAL INTEGRITY NOT VERIFIED

_____ CASING ANNULUS NOT HOLDING PRESSURE FOR TEST PERIOD

_____ RESCHEDULE TEST FOR DATE OF _____

_____ WELL SHOULD BE REPAIRED AND RETESTED

_____ WELL SHOULD BE SHUT IN

Kenny D Sotton
OPERATOR REPRESENTATIVE
WITNESS

H. Stubblefield
INSPECTOR

ARKANSAS OIL AND GAS COMMISSION
P O BOX 1472 2215 WEST HILLSBORO
EL DORADO, AR 71731-1472

INJECTION WELL INSPECTION

OPERATOR John C. Rogers / MISGC DATE 10-7 - 2002

LEASE John Parnell WELL NO 2 FIELD Agnes Rd North

COUNTY Union SEC 13 TWP 17 RGE 16

LOCATION

DIRECTIONS TO WELL

ANNULUS MONITOR INSPECTION

STATUS SHUT IN TUBING PRESSURE psig/vacuum in

OPERATING ANNULUS PRESSURE psig/vacuum in

TIME OBSERVED A M /P M

RESULTS

WELL PRESSURE TEST

STATUS SHUT IN X

OPERATING

TIME HOUR	TIME MINUTES	CASING ANNULUS PSIG
2	45	440
3	15	420

PACKER DEPTH

REMARKS 5.9 BBls to Fill up

RESULTS OF TEST

X WELL MECHANICAL INTEGRITY SATISFACTORY

____ WELL MECHANICAL INTEGRITY NOT VERIFIED

____ CASING ANNULUS NOT HOLDING PRESSURE FOR TEST PERIOD

____ RESCHEDULE TEST FOR DATE OF

____ WELL SHOULD BE REPAIRED AND RETESTED

____ WELL SHOULD BE SHUT IN

Kenny D. Sutton
~~OPERATOR REPRESENTATIVE~~
WITNESS

H. Stuart
INSPECTOR

O'BRIEN OPERATING COMPANY
JOHN PARNELL NO. 2 SALTWATER DISPOSAL WELL
AGNES ROAD NORTH FIELD
SEC. 13 T17S R16W
UNION COUNTY, ARKANSAS

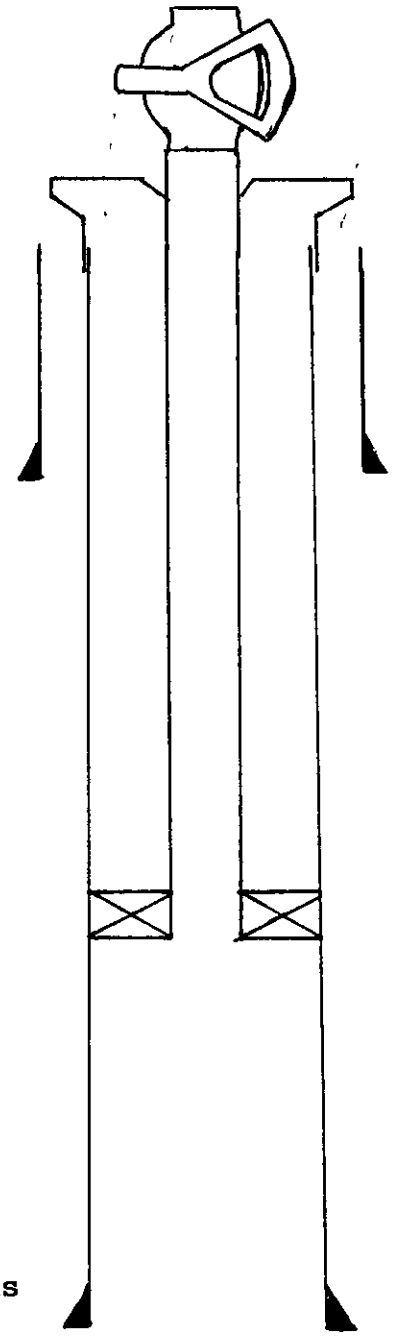

2-7/8" 2000 PSIG Gate Valve

5-1/2" x 2-7/8" Larkin Tubing Head

8-5/8" 22# Casing Set
at 762' w/350 sx cement

2-7/8" 6.5# J-55 Tbg

- Top of Cement at 3845'

Tension Packer Set at 4473'

Disposal Perforations
4574'-92'

Potential overall disposal
Interval 4570'-4635'

CIBP w/10' Cement at 5400'

Old Production Perforations
5533'-42'

5-1/2" 15.5# casing set at
5730' w/665 sx Cement

ARKANSAS
OIL AND GAS
COMMISSION

2215 West Hillsboro St ■ P O Box 1472
El Dorado, Arkansas 71731 1472

William E Wright
Director

Phone (501) 862-4965
FAX Number 862 8823

August 21, 1991

O'Brien Operating Co.
P.O. Box 6020
Shreveport, LA 71136-6020

Re: John Parnell #2
Sec. 13-17S-16W
Agnes Road North Field
Union County, AR

Dear Sir:

This letter is to inform you that approval of your application to inject produced salt water into the above referenced well shall be forth coming. If you will file the following information with this office upon completion of the above referenced well, the authority to dispose will be granted, provided that you have complied with the rules and regulations of the Arkansas Oil and Gas Commission.

1) Recompletion Report.
2) Service Company Tickets.

If I may be of further assistance, please call.

Sincerely,

Martin T. Perdue

Martin T. Perdue
Petroleum Engineer/UIC

MTP:gm

cc: DPC&E

COMMISSION MEMBERS ■ E Boyd Alderson Chairman El Dorado
James O Staggs, Vice Chairman Magnolia ■ Ned R Price Smackover ■ Spence A Leamons Fort Smith
J David Reynolds III Camden ■ Chris Weiser Magnolia ■ Kent Dollar, Russellville
Phillip E Norvell Fayetteville ■ Robert C Nolan El Dorado

An equal opportunity employer

ARKANSAS
OIL AND GAS
COMMISSION

2215 West Hillsboro St ■ P O Box 1472
El Dorado, Arkansas 71731-1472

William E Wright
Director

Phone (501) 862-4965
FAX Number 862-8823

October 16, 1991

O'Brien Operating Co.
P.O. Box 6020
Shreveport, LA 71136-6020

Re: John Parnell #2 SWD
Sec. 13-17S-16W
Agnes Road North Field
Union County, AR

Gentlemen:

Your application filed for authority to dispose of produced salt water into the referenced well has been reviewed and appears to meet the necessary requirements of the state. Please consider this letter as your authority to use the referenced well for disposal of produced water only, and in accordance with the provisions of the application as filed. Disposal shall be down the tubing string with a packer set immediately above the disposal zone as approved. Provisions to monitor the annulus between the tubing and casing strings shall also be required.

Only water from the applied for and approved wells shall be authorized for disposal in the above referenced SWD well and pressures and volumes shall comply with the application as filed.

It is requested that upon completion of the referenced salt water disposal that this office be notified for inspection and running of a mechanical integrity test on the referenced well. Additionally, monthly disposal reports (AOGC-14) shall be required; whereas, both annulus pressure and injection pressure are shown. Further, a completion report shall be filed indicating the perforated interval and tubing and packer settings.

Yours very truly,

Martin T. Perdue

Martin T. Perdue
Petroleum Engineer/UIC

cc: DPC&E

COMMISSION MEMBERS ■ E Boyd Alderson Chairman, El Dorado
James O Staggs Vice Chairman Magnolia ■ Ned R Price Smackover ■ Spence A Leamons Fort Smith
J David Reynolds III Camden ■ Chris Weiser Magnolia ■ Kent Dollar Russellville
Phillip E Norvell Fayetteville ■ Robert C Nolan El Dorado

An equal opportunity employer

RECEIVED
JUL 0 8 1991

NEWS-TIMES PUBLISHING CO.
EL DORADO, ARK

Affidavit For Proof of Publication

NO 4228

STATE OF ARKANSAS
COUNTY OF UNION } ss

I, Betty Pattings, do swear that I am Director of Advertising of the El Dorado News Times a daily newspaper printed and published in Union County, State of Arkansas, having a bonafide circulation in said county, and authorized by law to publish advertisements, and that the

Notice of Application was published in said newspaper 1 day consecutive ~~weeks~~,

the first insertion being on the 2nd day of July, and the last insertion being on the

day of , 19 91

Betty Pattings

Subscribed and sworn to before me this the 2nd day of July, 19 91

Melanie Jean Odom
Notary Public Circuit Clerk

My Commission Expires 2-22-92

NOTICE OF APPLICATION FOR SALT WATER DISPOSAL ENHANCED RECOVERY WELL PERMIT

O'Brien Operating Company, Post Office Box 6020, Shreveport, Louisiana 71106 has filed with the Arkansas Oil and Gas Commission for a permit to dispose of produced salt water by well injection into a formation that is not known to be productive of oil or gas. The applicant proposes to dispose of salt water into an Smackover Valley Formation at a depth of 4537-4640 feet in the O'Brien Operating Co. John Parnell, et al Well No. 2 located 2000' from the North line and 1000' from the West line of Section 13 Township 17 South Range 16 West in Agnes Road North Field, Union County, Arkansas.

Requests for a public hearing from persons who can show they are adversely affected or requests for information concerning this application should be submitted in writing to the Director of Underground Injection Control Arkansas Oil and Gas Commission, P O Box 1472 El Dorado, Arkansas 71731-1472

HALLIBURTON SERVICES
Duncan, Oklahoma 73536
A Division of Halliburton Company

ORM 1908 R-7

WORK ORDER CONTRACT AND PRE-TREATMENT DATA

ATTACH TO INVOICE & TICKET NO 977381

DISTRICT Haynesville, LA. DATE 10-19-90

TO HALLIBURTON SERVICES YOU ARE HEREBY REQUESTED TO FURNISH EQUIPMENT AND SERVICEMEN TO DELIVER AND OPERATE THE SAME AS AN INDEPENDENT CONTRACTOR TO O'Brien Operating Co. (CUSTOMER) AND DELIVER AND SELL PRODUCTS SUPPLIES AND MATERIALS FOR THE PURPOSE OF SERVICING

WELL NO 2 LEASE Parnell SEC ____ TWP ____ RANGE ____

FIELD ____ COUNTY Union STATE AR. OWNED BY O'Brien Operating Co

THE FOLLOWING INFORMATION WAS FURNISHED BY THE CUSTOMER OR HIS AGENT

FORMATION NAME ____ TYPE ____

FORMATION THICKNESS ____ FROM ____ TO ____

PACKER TYPE ____ SET AT ____

TOTAL DEPTH ____ MUD WEIGHT ____

BORE HOLE ____

INITIAL PROD OIL ____ BPD H_2O ____ BPD GAS ____ MCF

PRESENT PROD OIL ____ BPD H_2O ____ BPD GAS ____ MCF

	NEW USED	WEIGHT	SIZE	FROM	TO	MAX ALLOW PSI
CASING	N	17#	5½"	0	5730	2000
LINER						
TUBING						
OPEN HOLE						SHOTS/FT
PERFORATIONS						
PERFORATIONS						
PERFORATIONS						

PREVIOUS TREATMENT DATE ____ TYPE ____ MATERIALS ____

TREATMENT INSTRUCTIONS TREAT THRU TUBING ☐ ANNULUS ☐ CASING ☐ TUBING/ANNULUS ☐ HYDRAULIC HORSEPOWER ORDERED ____

Cement 5730 Ft. of 5½" casing with 100 sks Poz A with .87#/sk MF-1 + .5% CFR-3 + 3% KCL + 565 sks Premium with .75% Halad-322 + 3% KCL

CUSTOMER OR HIS AGENT WARRANTS THE WELL IS IN PROPER CONDITION TO RECEIVE THE PRODUCTS SUPPLIES, MATERIALS, AND SERVICES

As consideration the above named Customer agrees THIS CONTRACT MUST BE SIGNED BEFORE WORK IS COMMENCED

a) To pay Halliburton in accord with the rates and terms stated in Halliburton's current price list Invoices are payable NET by the 20th of the following month after date of invoice Upon Customer's default in payment of Customer's account by the last day of the month following the month in which the invoice is dated Customer agrees to pay interest thereon after default at the highest lawful contract rate applicable but never to exceed 18% per annum In the event it becomes necessary to employ attorneys to enforce collection of said account Customer agrees to pay all collection costs and attorney fees in the amount of 20% of the amount of the unpaid account

b) To defend indemnify release and hold harmless Halliburton its divisions subsidiaries parent and affiliated companies and the officers directors, employees, agents and servants of all of them from and against any claims liability expenses attorneys fees and costs of defense to the extent permitted by law for

1 Damage to property owned by in the possession of or leased by Customer and/or the well owner (if different from Customer) including but not limited to surface and subsurface damage The term well owner shall include working and royalty interest owners

2 Reservoir formation or well loss or damage subsurface trespass or any action in the nature thereof

3 Personal injury or death or property damage (including but not limited to damage to the reservoir formation or well) or any damages whatsoever growing out of or in any way connected with or resulting from pollution subsurface pressure losing control of the well and/or a well blowout or the use of radioactive material

The defense indemnity release and hold harmless obligations of Customer provided for in this Section b) and Section c) below shall apply to claims or liability even if caused or contributed to by Halliburton's negligence strict liability or the unseaworthiness of any vessel owned operated or furnished by Halliburton or any defect in the data products supplies materials or equipment of Halliburton whether in the preparation design manufacture distribution or marketing thereof or from a failure to warn any person of such defect Such defense indemnity release and hold harmless obligations of Customer shall not apply where the claims or liability are caused by the gross negligence or willful misconduct of Halliburton The term Halliburton as used in said Sections b) and c) shall mean Halliburton its divisions subsidiaries parent and affiliated companies and the officers directors employees agents and servants of all of them

c) That because of the uncertainty of variable well conditions and the necessity of relying on facts and supporting services furnished by others Halliburton is unable to guarantee the effectiveness of the products supplies or materials nor the results of any treatment or service nor the accuracy of any chart interpretation research analysis job recommendation or other data furnished by Halliburton Halliburton personnel will use their best efforts in gathering such information and their best judgment in interpreting it but Customer agrees that Halliburton shall not be liable for and Customer shall indemnify Halliburton against any damages arising from the use of such information

d) That Halliburton warrants only title to the products supplies and materials and that the same are free from defects in workmanship and materials THERE ARE NO WARRANTIES EXPRESS OR IMPLIED OF MERCHANTABILITY FITNESS OR OTHERWISE WHICH EXTEND BEYOND THOSE STATED IN THE IMMEDIATELY PRECEDING SENTENCE Halliburton's liability and Customer's exclusive remedy in any cause of action (whether in contract tort breach of warranty or otherwise) arising out of the sale or use of any products supplies or materials is expressly limited to the replacement of such products supplies or materials on their return to Halliburton or at Halliburton's option to the allowance to the Customer of credit for the cost of such items In no event shall Halliburton be liable for special incidental indirect punitive or consequential damages

e) That Customer shall at its risk and expense attempt to recover any Halliburton equipment tools or instruments which are lost in the well and if such equipment tools or instruments are not recovered Customer shall pay Halliburton its replacement cost unless such loss is due to the sole negligence of Halliburton If Halliburton equipment tools or instruments are damaged in the well Customer shall pay Halliburton the lesser of its replacement cost or the cost of repairs unless such damage is caused by the sole negligence of Halliburton In the case of equipment tools or instruments for marine operations Customer shall in addition to the foregoing be fully responsible for loss of or damage to any of Halliburton's equipment tools or instruments which occurs at any time after delivery to Customer at the landing until returned to the landing unless such loss or damage is caused by the sole negligence of Halliburton

f) To waive the provisions of the Deceptive Trade Practices - Consumer Protection Act to the extent permitted by law

g) That this contract shall be governed by the law of the state where services are performed or materials are furnished

h) That Halliburton shall not be bound by any changes or modifications in this contract except where such change or modification is made in writing by a duly authorized executive officer of Halliburton

I HAVE READ AND UNDERSTAND THIS CONTRACT AND REPRESENT THAT I AM AUTHORIZED TO SIGN THE SAME AS CUSTOMER'S AGENT

SIGNED [signature] CUSTOMER

DATE 10-19-90

TIME 2:00 AM PM

We certify that the Fair Labor Standards Act of 1938, as amended has been complied with in the production of goods and/or with respect to services furnished under this contract

COMPLETION

SCHL INVOICE NUMBER	DATE RECEIVED BY UNIT FINANCIAL	SCHL VENDOR CODE	SCHL CUSTOMER CODE

SERVICE(S) EQUIPMENT AND/OR PRODUCTS REQUESTED

JUNK BASKET GAUGE RING — BRIDGE PLUG 5½ — CEMENT DUMP BAILER
PERFORATE 3⅛ HEGS — RADIOACTIVE TRACER SURVEY

CUSTOMER FURNISHED LEASE WELL INFORMATION

STATE	ST CODE	COUNTY (PARISH/BOROUGH/AREA)	RIG NAME	OFFSHORE ZONE
ARK.		UNION	MOSLEY	—

LEASE	WELL NUMBER	PRICE ZONE
JOHN PARNELL #2 SWD FTAL		SED

LOCATION	FIELD	ORIGINAL HOLE SAID TO BE SIDETRACKED AT
	FAST LIDBON	

COMPANY	SAID WELL IS SAID TO BE IN GOOD CONDITION AND DRILLED TO A DEPTH OF
O'BRIEN OPERATING CO	5654 FT

THIS IS A CONTRACT PLEASE READ CAREFULLY IN CONSIDERATION OF THE PRICES AND THE SERVICES, EQUIPMENT AND/OR PRODUCTS PROVIDED TO CUSTOMER HEREUNDER, CUSTOMER AND SCHLUMBERGER AGREE TO BE BOUND BY THE TERMS AND CONDITIONS SET FORTH ON THE REVERSE SIDE HEREOF. THERE ARE, AMONG OTHER THINGS, INDEMNITY AND HOLD HARMLESS PROVISIONS AND WARRANTY EXCLUSIONS THEREIN. CUSTOMER MAY CHOOSE TO NEGOTIATE DIFFERENT TERMS AND CONDITIONS WITH SCHLUMBERGER WHICH MAY ENTAIL INCREASED PRICES AND/OR THE PROVISION OF INSURANCE COVERAGE PROTECTING SCHLUMBERGER AGAINST THE LIABILITIES PRESENTLY ASSUMED BY CUSTOMER HEREUNDER

CUSTOMER'S NAME PRINT	TOOL PROTECTION REQUESTED IF AVAILABLE	CUSTOMER PLEASE INITIAL ONE
O'BRIEN OPERATING		YES NO ☐ NOT AVAILABLE

INVOICE MAILING ADDRESS P.O. BOX OR STREET	CITY	STATE	ZIP CODE

SIGNATURE OF CUSTOMER OR AUTHORIZED REPRESENTATIVE	TITLE AND ADDRESS IF EXECUTED BY CUSTOMER'S REPRESENTATIVE
X [signature]	

THE ESTIMATED CHARGES AND DATA SHOWN BELOW ARE SUBJECT TO CORRECTION BY SCHLUMBERGER — FINANCIAL DEPARTMENT

UNIT NUMBER	DOWT ☐ STANDARD	LOCATION NAME	LOCATION CODE	LOCATION TERRITORY JOB IN	ACTUAL ROUND TRIP MILEAGE
138		SPORT	3802	SPORT	245 FROM SPORT

INITIAL COMPLETION				
☐ EXPL WELL	☐ DEVEL WELL	☑ WORKOVER ☐ OTHER	☐ 1ST TRIP	☑ SUBSEQUENT TRIP ☐ NO TRIP ☑ DAYLIGHT OPERATION

MILEAGE CHARGED N/C FROM SPORT

MKT CODE	DRILLED FOR				SCHL WIRELINE DEPTH	MAX DEV	MAX WELL HEAD PRESS
	☐ OIL	☐ GAS ☑ OTHER SWD	☑ LAND ☐ OFFSHORE	☐ BARGE ☐ MOTOR VESSEL ☐ LIFTBOAT	5510	—	PSI

	Date	Time	Desc No	Time Code	Elapsed Time	Desc No	OP Code	Equip Code	Reference Code	Item	Quantity	Unit Price	Amount
Cust Time	10/2	1100		22		1		JC	8197	Srv Chrg	665	.12	661.20
Lt HQ		0730								Depth Chrg	5510	.14	771.40
Arr Dock													
Left Dock										Oper Chrg	FLAT	300.00	300.00
Arr Well		1000		02	2.5								1732.60
Rig Up-St		1200		10	2.0			DSC	-504		75%		1299.45
Rig Up Fl		1230		05	0.5								
Beg Oper		1230				First Evaluation Log			☐ Yes ☐ No			Est Charge	433.15
Comp Oper		1330	1	13	1.0	☐ OH		☐ CH	State Tax			Add'l Chrg	
Beg Oper		1330				2		BP	8110	Depth Chrg	5490	.22	1207.80
Comp Oper		1430	2	13	1.0								
Beg Oper		1530		10	1.0				-120	Oper Chrg	FLAT	100.00	1100.00
Comp Oper		1600	3	13	0.5								2307.80
Beg Oper		1600						DUX	-504		75%		1730.85
Comp Oper		1700	4	13	1.0								
Beg Oper	10/2	1700		09								Est Charge	576.95
Comp Oper						☐ OH		☐ CH	State Tax			Add'l Chrg	
Beg Oper						3		OB	8187	Depth Chrg	5490	.20	1098.00
Comp Oper													
Beg Oper										Oper Chrg	FLAT	300.00	300.00
Comp Oper													1398.00
Beg Oper								DSC	-504		75%		1048.50
Comp Oper													
Rig DN Fl				96								Est Charge	349.50
Left Site						☐ OH		☐ CH	State Tax			Add'l Chrg	
Ret Dock								PO/RSR	9621				380.00
Ret HQ								WH/CONN	9132				250.00
Time Chgs													630.00
Total Hrs								DIC	-504		75%		472.50
Free Hrs													
Oper Time												Est Charge	157.50
Conv Time						☐ OH		☐ CH	State Tax			Add'l Chrg	
Hrs Chgd												Total Amount	9272

Crew	Reg Eq	Spec Eq	Tot Trip Time	Time	Date
			Eq Time		
			Reg Eq St Time		
			Reg Eq Fl Time		
			Spec Eq St Time		
			Spec Eq Fl Time		

Serv	First Reading	Last Reading	Footage Delivered

Desc No	Interval Perforated	Shots Per Ft
4	4575-4590	4

Desc No	No Guns	Shots Fired	Type Charge	Size	Thru Tubing
4	1	61	HEGS	3⅛	NO

No Desc	No of Misruns	No Shots Fired	No of Misfires
1		61	

Pressure Eq Used	H_2S Present
PO/RSR	%

No Sel Switches	Sel Sw Failures	FIT Tests Attempted	FIT Tests Successful

FIT Tests Sold	FIT Tests Dry	FIT Seal Failures

THIRD PARTY INVOICE NUMBER

Special Agreement Number

Witnessed By J. D. MOSS

SERVICE ORDER CONTRACT-CONTINUATION

Schlumberger

SWS—2754-C

DATE	SERVICE ORDER NO
10-3-91	4 1 6 6 7 2

CUSTOMER & NAME PRINT: O'BRIEN OPERATING

	Date	Time	Oper. No.	Work Code	Elapsed Time	Descr. No.	OR Code	Equipment Code	Reference Code	Depth/Oper Chrg	Quantity	Unit Price	Amount
Beg Oper						4		HELS	5180		4560	.44	642.60
Comp Oper													
Beg Oper								285			4560	.42	1891.00
Comp Oper													2533.60
Beg Oper								DISC	50%		75%		(1900.20)
Comp Oper													
Beg Oper												Est Charge	633.40
Comp Oper								TRACER					1001.50

Descr No.	Interval Perforated	Shots Per Ft
4	4575 - 90	4

Desc No.	No Guns	Shots Fired	Type Charge	Size	Thru Tubing
4	1	61	HEG	1/	

TOTAL TRIP TIME

Estimated Total Charge: 3,3[illegible]

THE SERVICE(S) AND/OR EQUIPMENT COVERED BY THIS SERVICE ORDER CONTRACT HAVE BEEN PERFORMED OR RECEIVED AS SET FORTH ABOVE (SEE #23 ON REVERSE)

O'BRIEN OPERATING COMPANY
APPLICATION FOR SALTWATER DISPOSAL
JOHN PARNELL NO. 2
UNION COUNTY, ARKANSAS

O'BRIEN OPERATING COMPANY

JOHN PARNELL ET AL NO. 1
1980 FWL and 2324' FNL of SEC 13 T17S R16W
COTTON VALLEY COMPLETION PERFORATED 5721.5'-24'
TD 6800'
COMPLETED 11-14-89
8-5/8" Casing at 760' cemented with 375 sacks
5-1/2" Casing at 5800' cemented with 400 sacks
CURRENT STATUS: SHUTIN

O'BRIEN OPERATING COMPANY

JOHN PARNELL NO. 2
1000' FWL and 2000' FNL of SEC 13 T17S R16W
COTTON VALLEY COMPLETION PERFORATED 5533'-42'
TD 6001'
COMPLETED 10-26-90
8-5/8" Casing at 762' cemented with 350 sacks
5-1/2" Casing at 5730' cemented with 665 sacks
CURRENT STATUS: PRODUCING

KIN-ARK OIL COMPANY

HANEY NO. 1
CENTER NE1/4 SW1/4 SEC 13 T17S R16W
SMACKOVER COMPLETION PERFORATED 6708'-11'
TD 6763'
COMPLETED 4-7-56
9-5/8" Casing at 828' cemented with 250 sacks
5-1/2" Casing at 6759' cemented with 250 sacks
CURRENT STATUS: Permanently Abandoned
Cement Plug 6720'-6655'
2600' 5-1/2" Casing Pulled

R.E. WILLIAMS

PARNELL NO. 1
CENTER SW1/4 NE1/4 SEC 13 T17S R16W
DRILLED and ABANDONED
TD 6749'
ABANDONED AS DRY HOLE 9-18-62
8-5/8" Casing at 987' cemented with 350 sacks

File

ARKANSAS
OIL AND GAS
COMMISSION

2215 West Hillsboro St ■ P O Box 1472
El Dorado, Arkansas 71731-1472

William E Wright
Director

Phone (501) 862-4965
FAX Number (501) 862-8823

September 30, 1993

O'Brien Operating Co
P.O. Box 6020
Shreveport, LA 71136-6020

Re· Parnell Lease
Agnes Road North Field
Union County, AR

Dear Mr O'Brien:

An inspection of the Parnell Lease was made on August 20, 1993. At that time it was noted that the packing in the saltwater pump leaked severely and was creating a mess on the location. I talked by phone with your pumper, Mr John Rogers, and he assured me that a method of containment and some "dress-up" work would be constructed within the next two weeks A follow-up inspection was conducted yesterday and the location was found in considerable worse shape The packing is leaking worse. A siphon hose has allowed tank "run-over" out of the firewall and left water and oil in depressions on the location that has run off into nearby timber It will be necessary to clean up the location and construct a containment method for the saltwater pump discharge If the firewalls cannot be kept clean enough to drain strictly fresh rain water, then you will have to pick up the fluid and run it through the system A follo -up inspection will be made within fifteen (15) days

If you have any question, please advise

Sincerely,

Gary Looney
Oil & Gas Technician/UIC
GL gm

COMMISSION MEMBERS ■ E Boyd Alderson, Chairman, El Dorado
Ned R Price, Vice Chairman, Smackover ■ Spence A Leamons, Fort Smith
J David Reynolds III, Camden ■ Chris Weiser, Magnolia ■ Kent Dollar, Russellville
Phillip E Norvell, Fayetteville ■ Robert C Nolan, El Dorado ■ Chad White, Magnolia

An equal opportunity employer

ARKANSAS
OIL AND GAS COMMISSION

William E. Wright
Director

2215 West Hillsboro St ■ P.O. Box 1472
El Dorado, Arkansas 71731-1472

Phone (870) 862-4965
FAX Number (870) 862-8823
E-Mail aogc@ipa.net

August 24, 1999

CERTIFIED RETURN
RECEIPT REQUESTED
Z 198 194 536

Mr. John C. Rogers
434 South Bradley
El Dorado, AR 71730

Re: John Parnell #2 SWD
Agnes Road North

Dear Mr. Rogers:

This letter is to inform you that the **"Authority to Dispose" has been cancelled** on the above referenced well(s) for failure to pay your annual assessment fees. These well(s) are to be shut-in immediately until all fees have been paid and remain shut-in until you are notified by this office that your "Authority to Dispose" has been reinstated.

Sincerely,

Gary D. Looney
UIC Director

GDL gm

COMMISSION MEMBERS ■ Spence A. Leamons, Chairman, Fort Smith
Chris Weiser, Vice-Chairman, Magnolia ■ Chad White, Magnolia ■ Lowell Boynton, Fayetteville
W. Frank Morledge, Forrest City ■ Charles Wohlford, Fort Smith ■ Bill C. Poynter, Texarkana
Kenneth Karmel, Laneburg ■ Mike Davis, Camden

An equal opportunity employer

ARKANSAS
OIL AND GAS
COMMISSION

2215 West Hillsboro St ■ P O Box 1472
El Dorado, Arkansas 71731-1472

William E Wright
Director

Phone (501) 862-4965
FAX Number (501) 862-8823

November 7, 1995

John C. Rogers
434 S. Bradley
El Dorado, AR 71730

Re John Parnell #2 SWD
Sec. 13-17S-16W
Agnes Road North Field
Union County, AR

Dear Sir:

Enclosed is the list of wells currently authorized to dispose of produced salt water into the above referenced SWD well, as per your revised application Also the new daily disposal rate for the above referenced SWD well is 400 BSWPD.

Sincerely,

Gary D. Looney

Gary Looney
Oil & Gas Technician/UIC

GL:gm

cc· DPC&E

COMMISSION MEMBERS ■ E Boyd Alderson, Chairman, El Dorado
Ned R Price, Vice Chairman, Smackover ■ Spence A Leamons, Fort Smith
J David Reynolds III, Camden ■ Chris Weiser, Magnolia ■ Kent Dollar, Russellville
Phillip E Norvell, Fayetteville ■ Robert C Nolan, El Dorado ■ Chad White, Magnolia

An equal opportunity employer

209

ARKANSAS DEPARTMENT OF POLLUTION CONTROL
AND ECOLOGY

GENERAL ROUTE SLIP

ORIGIN D. Ogden DATE SENT 11-01-95

RETURN TO _____ RETURN BY _____

TO Gary Looney

Change of operator from O'Brien Operating Co. to John C Rogers and an increase in the Amount of produced Water to be injected.

RECEIVED
95 NOV -2 AM 10:25

2915

PROCEDURES AND REQUIREMENTS FOR SURFACE CASING AND THE PLUGGING OF WELLS

You are REQUIRED to set a minimum of 750 feet of surface casing on the well listed below to comply with the Minumum Casing Requirements adopted by the Arkansas Oil and Gas Commission.

O'Brien Operating Co. — OPERATOR

John Parnell #2 — LEASE AND WELL NO.

If you anticipate the need to pump the reserve pit down the well bore you should set a minimum of 1703 feet of surface casing. Permission must be obtained from a Commission engineer prior to the commencement of pumping operations.

Surface casing will be cemented to the surface of the earth. ALL cementing will be done by the pump and plug method.

You are REQUIRED to notify the Commission in ample time for an engineer of the Commission to be present to witness the running and cementing of the casing.

In the event that the well is to be abandoned, the Commission must be notified of same in ample time for an engineer of the Commission to be present to witness the plugging of the well. ALL wells will be plugged in accordance with Rules B-7 & B-8 of the General Rules and Regulations.

The Commission engineer for your area is Dennis Endel

ENGINEERS	AREA COUNTIES	HOME PHONE
Kirk Hudson	Hempstead, Lafayette, & Miller	863-0134
Steve Saulsbury	Columbia, Nevada, & Ouachita	862-6496
Dennis Endel	Ashley, Bradley, Calhoun, & Union	862-8434

In the event that the engineer of your area cannot be contacted, contact the office of the ARKANSAS OIL AND GAS COMMISSION, 2215 West Hillsboro, P.O. Box 1472, El Dorado, Arkansas 71731-1472. PHONE (501) 862-4965 between the hours of 8:00 A.M. to 5:00 P.M., Monday through Friday.

Gary Looney	UIC Engineering Technician	862-7848
Marty Perdue	Petroleum Engineer	863-4456
Hampton Bussey	Petroleum Engineer Supervisor	693-5757
W.E. "Bill" Wright	Director	863-8784

FIELD AGNES Rd. NORTH COMPANY O'Brien Operating Co.

COUNTY Union WELL John Parnell #2

LOCATION S 13 T 17 R 16

COMPETION DATE TOTAL

** COMPLETION & RECOMPLETION DATA**

DATE	PERFORATIONS	REMARKS (Bridge Plug Data, Procuction Data)
10-9-90		8 5/8" - 762' w/ 350 sks.
10-19-90		5 1/2" - 5730' w/ 665 sks.

Allstate

TO _____ FROM _____ FILE NO _____

OFFICE OFFICE INSURED

In Response to your letter -

See attached & process ASAP

Thanks,
John

Marty:
OK to approve?
T-Pax OK
MAP

Leave it to me...one of The Good Hands People.

G110-6

DATE ____/____/____

ARKANSAS OIL AND GAS COMMISSION

COMPANY O'Brien Operating Co. WELL NAME & NO. John Parnell #2

LOCATION 1000' FWL & 2000' FNL SEC-TWP-RGE 13-17S-11W

COUNTY Union FIELD Agnes Rd North

Depth to be drilled 6000 feet. Surface casing required 750 feet; to pump pit 1703 feet.

Date to start drilling 9-90; Date permitted 9-13-90; Contractor SDC.

Formation Cotton Valley Fresh water plug to be set 800 to 700.

10-17-90 9720'

SURFACE CASING

Surface casing: Size 8 5/8 Amount 762. Hole Size 12 1/4 Sacks of Cement 350.

Returns _____ Date set 10-9-90 Cementer Coleman Witness _____.

PLUG TO ABANDON

PLUG	HOLE DIAMETER D (in)	HOLE CAPACITY Ch (Cu.ft./ft.)	CEMENT N=100 x Ch/Y (sacks)	SET AT bottom (ft)	SET AT top (ft)	LENGTH L=V/Ch (ft)
1						
2						
3						
4						

Cement calculations based on 100 foot plug.

CEMENT PROPERTIES

Plug	1	2	3	4
Cement Type				
(Y) - Slurry Volume (Cu.ft./sk.)				
(W) - Mix Water (gal./sk.)				
(V) - Slurry = YxN (Cu.ft.)				
(Wb) - Mix Water = WxN/42 (Bbls.)				

Total Depth _____ Plugged in the top of surface casing with _____ sacks of cement.

Cementer _____ Witness _____ Date _____

REMARKS: 5 1/2" - 5,730' w/ 665 sks. Halliburton 10-19-90

ARKANSAS
OIL AND GAS
COMMISSION

2215 West Hillsboro St ▪ P O Box 1472
El Dorado, Arkansas 71731-1472

William E Wright
Director

Phone (501) 862-4965
FAX Number (501) 862-8823

September 11, 1995

Mr. John C. Rogers
434 South Bradley
El Dorado, Arkansas 71730

RE: O'Brien Operating Company
John Parnell #2 SWD Well
Agnes Road North Field
Union County, Arkansas

Dear Mr. Rogers:

Please file the enclosed AOGC Form 4's "Producers Certificate of Complaince and Authorization to Transport Oil or Gas from Lease" on the referenced well. It is also necessary to file an additional $3,000 letter of credit to cover the operator change. I cannot approve the Form 4's on the John Parnell #1 well, Agnees Road North Field, into your name until all information is received by this office.

If we may be of any assistance, please advise.

Yours truly,

Shirley Knight

Shirley Knight,
Statistician II -
Production Department

:sk

Enclosure

cc: Mr. W. E. Wright, Director
Mr. Martin Perdue, UIC Section

COMMISSION MEMBERS ▪ E Boyd Alderson Chairman El Dorado
Ned R Price, Vice Chairman, Smackover ▪ Spence A Leamons, Fort Smith
J David Reynolds III Camden ▪ Chris Weiser, Magnolia ▪ Kent Dollar, Russellville
Phillip E Norvell Fayetteville ▪ Lowell D Boynton, Fayetteville ▪ Chad White, Magnolia

An equal opportunity employer

NARRATIVE DESCRIPTION

FOR

O'BRIEN OPERATING COMPANY

ENGINEER: Ken Estes PERMIT NO. 4083-W DATE: 08/13/91

O'Brien Operating Company proposes to permit the construction and operation of the John Parnell No. 2 salt water disposal system located in Section 13, Township 17S, Range 16W, Agnes Road North Field, Union County, Arkansas. The John Parnell No. 2 well will be converted to dispose of salt water into the Cotton Valley Formation at a subsurface depth interval of 4570 to 4635 feet. There will be 1 well connected to the system that produces 350 barrels of salt water per day. There are two 400 barrel holding tanks with firewalls around all salt water storage tanks provided to meet Department requirements for SWD systems. Injection pressure is 750 psig.

Flow rates can be verified by turbine meter. A gauge will be placed on the well head for checking pressure.

There are no transfer stations connected to the disposal system.

The following wells are approved for connection to the John Parnell No. 2 SWD System:

John Parnell Well No. 1 SENW Sec. 13-17S-16W 350 BW/D

Any modification to the system as described in the application will require a revision of the permit.

This is the initial application for a permit to dispose of salt water by O'Brien Operating Company on the John Parnell No. 2 SWD System.

DEC 06 1991

Issued By

STATE OF ARKANSAS
DEPARTMENT OF POLLUTION CONTROL AND ECOLOGY
8001 NATIONAL DRIVE, P.O. BOX 9583
LITTLE ROCK, ARKANSAS 72209

CSN No. 70-0424

Permit No. 4083-W

Effective Date 01/02/92

To:

O'Brien Operating Company
P.O. Box 6020
Shreveport, LA 71136-6020

Consulting Engineer:

This permit is your authority to operate and maintain the waste disposal system as set forth in your application dated July 18, 1991. This permit is issued subject to provisions of the Arkansas Water and Air Pollution Control Act (A.C.A. Sec. 8-4-101 et seq.) and the following terms and conditions:

1. The disposal system shall be constructed or modified in accordance with the final plans and specification as approved by the Department of Pollution Control and Ecology.
2. This permit shall automatically terminate unless construction of the disposal system has commenced within 3 months of the effective date and completed with all reasonable diligence. The Department shall be notified in writing when the disposal system has been completed in order that it may be inspected.
3. The disposal system shall be operated by qualified personnel and maintained in good operating condition at all times.
4. By-passing of the disposal system is prohibited and will result in revocation of this permit and/or other appropriate enforcement action by the Department.
5. There shall be no increase in the volume or strength of the waste being treated by the disposal system except within design limits covered by the plans and specifications approved by the Department. No extension or modification of the disposal system may be made without the issuance of a new permit.
6. This permit may be revoked or modified whenever it is necessary, in the opinion of the Department, to prevent or abate pollution of any waters of the state.
7. Nothing herein contained shall be construed as releasing the permittee from any liability for damage to persons or property by reason of the installation, maintenance or operation of the disposal system.
8. This Permit is issued in reliance upon the statements and representations made in the application and the plans and specifications, and the Department has no responsibility for the adequacy or proper functioning of the disposal system.
9. PLEASE NOTE ADDITIONAL CONDITIONS ON THE ATTACHED SHEET.

ARKANSAS DEPARTMENT OF POLLUTION CONTROL AND ECOLOGY

By: _____ 12/3/91
Chief, Water Division Date

10. The permittee shall comply with all applicable permit fee requirements for state permits as described in ADPC&E Regulations No. 9 (Regulation for Fee System for Environmental Permits). Failure to promptly remit all required fees shall be grounds for the Director to initiate action to terminate this permit under the provisions of ADPC&E Regulation No. 8.

11. This system is known as the John Parnell #2 Salt Water Disposal System located in Section 13, Township 17 South, Range 16 West, Agnes Road North Field, Union County, El Dorado, Arkansas.

12. This permit is based on a projected disposal rate of 350 barrels per day. An increase of 15% or more above this amount will require modification of this permit.

13. The John Parnell #2 disposal well will receive salt water from the John Parnell #1 well. The same will be injected into the Cotton Valley Formation at a subsurface depth interval of 4570' to 4635'.

14. There shall be posted at the site of the well or tank battery a permanent sign bearing the name of the operator, the permit number, the lease, and legal description of the location.

15. No salt water shall be discharged to the surface waters of the State of Arkansas.

16. There shall be constructed around all salt water storage tanks an impermeable dike capable of holding 1.5 times the capacity of the largest tank contained within the berm.

17. As an adjunct to the above conditions, the permittee shall comply with all provisions of Arkansas Pollution Control and Ecology Commission Regulation No. 1.

DEC 06 1997

DEPARTMENT OF POLLUTION CONTROL AND ECOLOGY

8001 NATIONAL DRIVE, P O BOX 8913
LITTLE ROCK, ARKANSAS 72219
PHONE (501) 562-7444
FAX (501) 562-4632

CERTIFIED MAIL: P 905 076 639
RETURN RECEIPT REQUESTED

December 4, 1991

O'Brien Operating Company
P.O. Box 6020
Shreveport, LA 71136-6020

Gentlemen:

The enclosed permit (No. 4083-W) is your authority to construct, operate and maintain the John Parnell #2 Salt Water Disposal System as set forth in your application dated July 18, 1991.

This permit is issued subject to the provisions of the Arkansas Water and Air Pollution Contol Act (A.C.S. Sec. 8-4-101 et seq) and the terms and conditions stated therein. Approval for underground injection is also required from the Arkansas Oil and Gas Commmission.

After considering the facts and requirements of the aforementioned Act and implementing regulations, I have determined that Permit No. 4083-W for the construction, operation and maintenance of a water pollution control system for John Parnell #2 SWD be issued and effective on the date specified in the permit, unless a Commission review has been properly requested under Section 4, Part III, of Regulation No. 8, Arkansas Department of Pollution Control and Ecology Administrative Procedures, within 30 days after service of this decision.

All persons entitled to do so, may request an adjudicatory hearing and Commission review on whether the decision of the Director should be reversed or modified. Such a request shall be in the form and manner required by Section 4, Part III of Regulation No. 8.

Sincerely,

Chuck Bennett
Chief, Water Division

DEC 06 1991

CB:kc

Enclosure

cc: Arkansas Dept. of Health - Division of Engineering
Marty Perdue, Arkansas Oil & Gas Commission
Darlene Ogden, ADPC&E, El Dorado office

NARRATIVE DESCRIPTION

FOR

O'BRIEN OPERATING COMPANY

ENGINEER: Ken Estes PERMIT NO. 4083-WR-1 DATE: 11/10/92

O'Brien Operating Company proposes to revise the permit to reflect a change in the construction and operation of the John Parnell No. 2 salt water disposal system located in Section 13, Township 17S, Range 16W, Agnes Road North Field, Union County, Arkansas. The John Parnell No. 2 well was converted to dispose of salt water into the Cotton Valley Formation at a subsurface depth interval of 4570 to 4635 feet. There will be 1 well connected to the system that produces 350 barrels of salt water per day. There is one 400 barrel holding tank with automatic cut-off switches to producing wells and firewalls around all salt water storage tanks provided to meet Department requirements for SWD systems. Injection pressure is 750 psig.

Flow rates can be verified by a turbine flow meter. A gauge will be placed on the well head for checking pressure.

There are no transfer stations connected to the disposal system.

The following well is approved for connection to the John Parnell No. 2 SWD System:

John Parnell Well No. 1 SENW Sec. 13-17S-16W 350 BW/D

Any modification of the system as described in the application will require a revision of the permit.

The revision of this permit was necessary to reflect the deletion of 400 barrels of water storage at the John Parnell No. 2 SWD System.

STATE OF ARKANSAS
DEPARTMENT OF POLLUTION CONTROL AND ECOLOGY
8001 NATIONAL DRIVE, P.O. BOX 8913
LITTLE ROCK, ARKANSAS 72219-8913
PHONE. (501) 562-7444
FAX· (501) 562-4632

CERTIFIED MAIL: P 905 080 092
RETURN RECEIPT REQUESTED

December 4, 1992

O'Brien Operating Company
P.O. Box 6020
Shreveport, LA 71136-6020

Gentlemen:

The enclosed permit (No. 4083-WR-1) is your authority to construct, operate and maintain the John Parnell #2 Salt Water Disposal System as set forth in your application dated October 2, 1992.

This permit is issued subject to the provisions of the Arkansas Water and Air Pollution Contol Act (A.C.S. Sec. 8-4-101 et seq) and the terms and conditions stated therein. Approval for underground injection is also required from the Arkansas Oil and Gas Commmission.

After considering the facts and requirements of the aforementioned Act and implementing regulations, I have determined that Permit No. 4083-WR-1 for the construction, operation and maintenance of a water pollution control system for John Parnell #2 SWDS be issued and effective on the date specified in the permit, unless a Commission review has been properly requested under Section 4, Part III, of Regulation No. 8, Arkansas Department of Pollution Control and Ecology Administrative Procedures, within 30 days after service of this decision.

All persons entitled to do so, may request an adjudicatory hearing and Commission review on whether the decision of the Director should be reversed or modified. Such a request shall be in the form and manner required by Section 4, Part III of Regulation No. 8.

Sincerely,

Chuck Bennett
Chief, Water Division

CB:ka

Enclosure

cc: Arkansas Dept. of Health - Division of Engineering
Marty Perdue, Arkansas Oil & Gas Commission
Darlene Ogden, ADPC&E, El Dorado office

rev. 3/17/89

APPLICATION TO INJECT SALT WATER/ENHANCED RECOVERY FLUID

Arkansas Oil & Gas Commission
2215 West Hillsboro
P.O. Box 1472
El Dorado, AR 71731-1472

Arkansas Department of Pollution
Control and Ecology
P.O. Box 851
El Dorado, AR 71731-0851

Note: In an effort to reduce the amount of paperwork necessary to permit a Salt Water Injection System both regulatory agencies involved have combined their applications. Upon completion of this form send a copy to each agency listed above. Any modifications, alterations, additions or changes in the permitted system, well connected thereto, and quantities of salt water injected will require permit revision by both the ADPC&E and the AO&GC. Both regulatory agencies must be notified in writing, and approval granted before modifications can be enacted. All applications for disposal of oil field wastes by other than injection wells shall be submitted to the ADPC&E's office in Little Rock.

PERMIT FEES--ARKANSAS DEPARTMENT OF POLLUTION CONTROL AND ECOLOGY
In accordance with Act 817 of 1983 and regulations promulgated thereto, a fee is required to be paid by the applicant prior to the issuance, modification, or renewal/reissuance of a permit. In addition, the permittee will be assessed an annual review fee in accordance with the permit fee regulations. The purpose of the permit fees is to help defray the administrative cost of issuance, renewal, inspection, modification, and monitoring associated with these permits. The initial permit application fee for salt water injection permits is $150.00, and should be submitted along with the permit application. This fee is payable by cash, check or money order and must be received by the Department of Pollution Control and Ecology before the permit can be issued.

PERMIT FEES--ARKANSAS OIL AND GAS COMMISSION
In accordance with Order Reference Number 185-84 a fee on one hundred dollars ($100.00) is required to be submitted with each application. In addition to the application fee a non-transferrable fee of one hundred dollars ($100.00) per injection/enhanced recovery well per year is required to be paid to the Arkansas Oil and Gas Commission by July 1 of each year.

OWNER/OPERATOR O'Brien Operating Company

STREET P.O. Box 6020

CITY Shreveport STATE LA ZIP 71136-6020

A list of the names, addresses and telephone numbers of supervisory and field personnel responsible for the disposal system.

J.R. Gordon P.O. Box 6020 Shreveport, LA 71136-6020 318/869-3247

John Rogers 1005 Palm Dr. El Dorado, AR 71730 501/863-8623

I. This application is for approval to inject (X) Produced Salt Water ( ) Enhanced Recovery Fluid into the (Zone) Cotton Valley of the Agnes Road North Field, at a depth interval of 4570 to 4635 feet SUB-SURFACE in the system known as the John Parnell No. 2 at a location described as being 1000' FWL & 2000' FNL of Section 13 Township 17S Range 16W of Union County, Arkansas. The nearest city/town is El Dorado, AR

It is proposed to begin disposal operations on or about August 15, 1991.

The estimated cost of the facilities is $ 20,000.

RECEIVED JUL 10 1991

This application is being filed under the requirements of Rule C-7 (C-7, C-8, or C-9 indicate which) of the General Rules and Regulations of the Arkansas Oil and Gas Commission.

C-7 If there is NO production within a 1/2 mile radius of the proposed inject well in the proposed injection zone.
C-8 If there IS production within a 1/2 mile radius of the proposed injection well in the proposed injection zone.
C-9 Using gas to maintain or repressure a reservoir.

II. (Complete either (A) or (B) as applicable.) See Attachment for construction requirements.

A. (X) This well is a COMPLETED well and will be converted to injection service; it is cased and cemented as indicated below:

(SIZE) 8-5/8 Surface Casing set at 762 feet with 350 sacks.

(SIZE) 5-1/2 Production Casing set at 5730 feet with 665 sacks.

(SIZE) 2-7/8 Injection Tubing set at 4470 feet with PACKER set at 4473 feet.
(Note: All injection wells must have tubing and a packer or other installation to protect the casing. The packer can be set no higher than 100 feet above injection interval.)

All available logs are enclosed: (X) Yes ( ) No

Hole/bit size is 7-7/8 inches. Total depth of the well is 6001 feet.

B. ( ) This well WILL BE DRILLED for injection service and a regular fee drilling application will be submitted. We plan to case and cement the well as indicated below:

(SIZE) _____ Surface Casing set at _____ feet with _____ sacks.

(SIZE) _____ Production Casing set at _____ feet with _____ sacks.

(SIZE) _____ Injection Tubing set at _____ feet with Packer set at _____ feet.
(Note: All injection wells must have tubing and a packer or other installation to protect the casing. The packer can be set no higher than 100 feet above injection interval.)

Hole/Bit size proposed is _____ inches. Total depth of well proposed is _____ feet.

III. Each of the operators listed below owning leases within the one-half (1/2) mile radius of the proposed injection well have received a copy of this application by certified mail and copies of the return receipts have been attached to this application as proof thereof.

LEASE	OPERATOR	ADDRESS
None	No Offset Operators	

(If additional space is needed, attach a separate sheet.)

IV. A plat is attached which indicates the location of the proposed injection well with distances to nearest lease lines. Also shown on the plat are all wells of public record and fresh water wells of public record within a one-half (1/2) mile radius from the proposed injection well. A separate list of all wells which have penetrated the injection zone is included to indicate: (Information submitted MUST agree with AOGC records.)

1. Exact Legal Location
2. Current Operator
3. Lease Name
4. Name of Zone Currently Completed
5. Perforated Intervals
6. Total Depth
7. Drilling Date
8. Cementing Records
9. Record of Completion/Plugging
10. Current Status-Specify
    a. Producing
    b. Shut In
    c. Injection (disposal or enhanced rec.)
    d. Municipal Water Supply
    e. Permanently Abandoned
    f. Specify Other Status

V. A schematic drawing of the sub-surface installation is attached to show casing, approximate top and bottom of cement, tubing, packers, perforations, and well head of the injection well. Equipment must be installed and used to assure that injection will be confined to the proposed injection zone.

O'BRIEN OPERATING COMPANY
APPLICATION FOR SALTWATER DISPOSAL
JOHN PARNELL NO. 2
AGNES ROAD NORTH FIELD
UNION COUNTY, ARKANSAS
EXHIBIT XVI

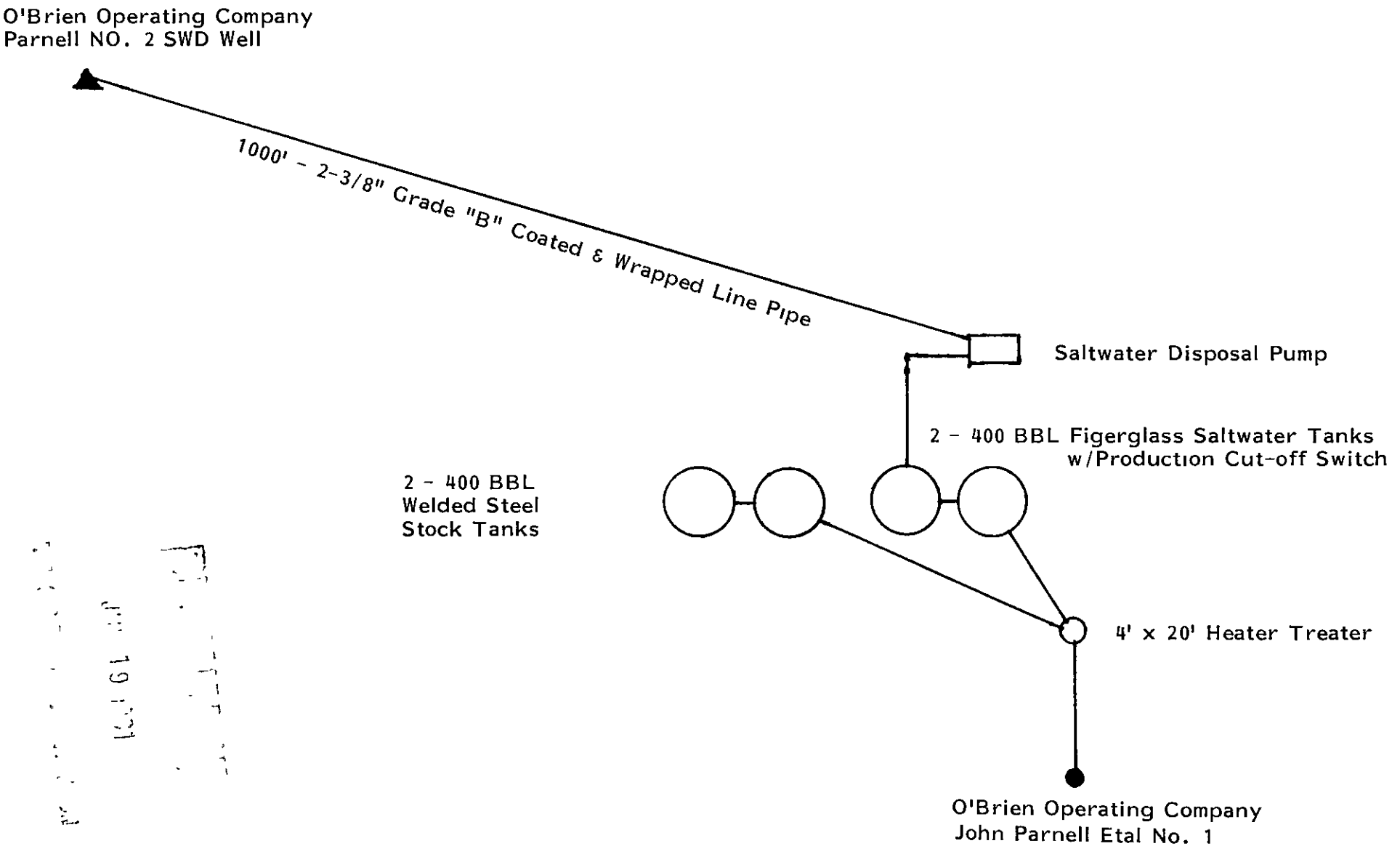

XIV. A. The estimated maximum amounts of produced salt water to be injected are 350 barrels per day. NO other fluid or product may be injected into the proposed injection well without prior permission of the appropriate regulatory agency.

B. The maximum injection pressure at the injection well head will be less than 0.5 pig for each foot of sub-surface depth to the injection zone. An exception for this maximum pressure may be granted if the applicant presents sufficient evidence to justify the exception. The injection pressure shall be limited to that pressure which will not fracture the confining beds of the proposed injection zone, or cause movement of injection or formation fluids into fresh water zones. Estimated injection pressure is 750 psig. The actual volumes of salt water injected and well head pressure will be reported monthly on AOGC Form 14.

XV. A description of the method to be used for monitoring disposal system flows and pressures is to be included. This should contain a description of how such flow rates and pressures can be verified or checked for accuracy.

XVI. A drawing is attached showing the locations of the items below. The scale of the drawings should be clearly indicated and the approximate direct distance between producing wells and disposal wells specified on the drawing.

1. Connected
2. Holding Tanks (Show size)
3. Tank Batteries
4. Treaters, Gunbarrels
5. Piping (Show size and materials)
6. Separators
7. Pumps
8. Production Cut-Off Switches
9. Emergency Storage Facilities (Show length, depth, width or tank size in Bbls.)

(NOTE: See ADPC&E Guide for information on storage facilities.)

XVII. HOLDING TANK REQUIREMENTS FOR TRANSFER STATIONS
(See terminology list at end of Section XVIII for meanings of abbreviations.)

A. For DTV/DIV 0.4

1. If salt water can be transferred to the Main Disposal Station without the addition of mechanical head (pumps):

   a. MSR=100 BBL, or
   b. MSR=DTV (If DTV is 100 BBL/Day)

2. If salt water cannot be transferred to the Main Disposal Station without the addition of mechanical head (pumps):

   a. Automatic cut-off switches to producing wells connected to the Transfer Station are required. The cut-off switch must be situated on the Transfer Station salt water storage vessel to provide a storage capacity of equal to DTV/24 (BBLS.) above the cut-off level, or;
   b. MSR=DTV/4 (BBLS.) with a minimum storage capacity of 100 BBLS, or DTV (if DTV is 100 BBLS/Day.)

B. For DTV/DIV 0.4

1. Automatic cut-off switches to producing wells connected to the Transfer Station are required. The cut-off switch must be situated on the Transfer Station salt water storage vessel to provide storage capacity equal to DTV/24 (BBLS) above the cut-off level, or;

2. MSR=DTV/2 (BBLS) with a minimum storage capacity of 100 BBLS or DTV (if DTV is 100 BBLS/Day.)

C. If the Transfer Station is not connected to the Main Disposal Station by pipeline, i.e. salt water must be transported by truck, MSR=3 DTV (BBLS)

D. The Transfer Station salt water storage vessels shall be surrounded by an impermeable dike or firewall with a capacity equal to 1.5 times the volume of the largest vessel contained within the walls.

E. Any alternate system or design which meets the approval of the ADPC&E.

XVIII. HOLDING TANK REQUIREMENTS FOR MAIN DISPOSAL STATIONS

A. For IP/MP 0.4

1. If salt water can be disposed into the disposal well without the addition of mechanical head (pumps):

   a. MSR=100 BBLS, or;
   b. MSR=DIV if DIV 100 BBLS/Day

2. If salt water cannot be disposed into the disposal well without the addition of mechanical head (pumps):

   a. Automatic cut-off switches to producing wells connected to the Main Disposal Station are required. The cut-off switch must be situated on the Main Disposal Station salt water storage vessel to provide a storage capacity equal to DIV/24 (BBLS) above the cut-off level, or;

   b. MSR=DIV/2 with a minimum storage capacity of 100 BBLS, or DIV (if DIV 100 BBLS/Day).

B. For IP/MP 0.4

   1. Automatic cut-off switches to producing wells connected to the Main Disposal Station are required. The cut-off switch must be situated on the Main Disposal Station storage vessel to provide a storage capacity equal to DIV/24 (BBLS) above the cut-off level, or;

   2. MSR=DIV/2 with a minimum storage capacity of 100 BBLS, or DIV (if DIV is 100 BBLS/Day).

C. The Main Disposal Station salt water storage vessels shall be surrounded by an impermeable dike or firewall with a capacity of 1.5 times the volume of the largest vessel contained within the walls.

D. Any alternative system or design which meet the approval of the ADPC&E.

TERMINOLOGY

D--Sub-surface depth to the top of the injection one as listed in Section I of the permit application.

DIV--Estimated maximum amounts of salt water to be injected daily as reported in Section XIV (A) of the permit application (BBLS.).

DTV--Amounts of salt water transferred daily from production separators to the Transfer station. (BBLS)

IP--Estimated injection pressure as listed in Section XIV (B) of the permit application (psig). If this pressure is less than or equal to 1 psig, a value of 1 psig shall be used in the calculation of the minimum required storage.

Main Disposal Station--The site, in the construction and operation of a SWD system, utilized for the final collection and storage of produced salt water prior to the disposal by sub-surface injection.

MP--Maximum allowable well head pressure, equal to 0.5 psi per foot of sub-surface depth to the injection zone (0.5 D, psig)

MSR--Minimum required storage, as calculated by the appropriate formula (BBLS)

Transfer Station--A site shall be considered a Transfer Station if produced salt water cannot be transferred directly to the Main Disposal Station from the production separator, i.e. a salt water storage vessel is connected at the site.

-- Less than

-- Greater than or equal to

XIX. A copy of the Spill Prevention Control and Countermeasures (SPCC) plan for this system must be available for inspection upon request.

I, Morgan P. O'Brien,

do certify that the information presented within this application and all attachments are to the best of my knowledge and belief, true, correct and complete.

Signature of Applicant	Title	Date Application
Morgan P. O'Brien	Executive Vice-President	7/18/91

MAIN DISPOSAL STATION REQUIREMENTS

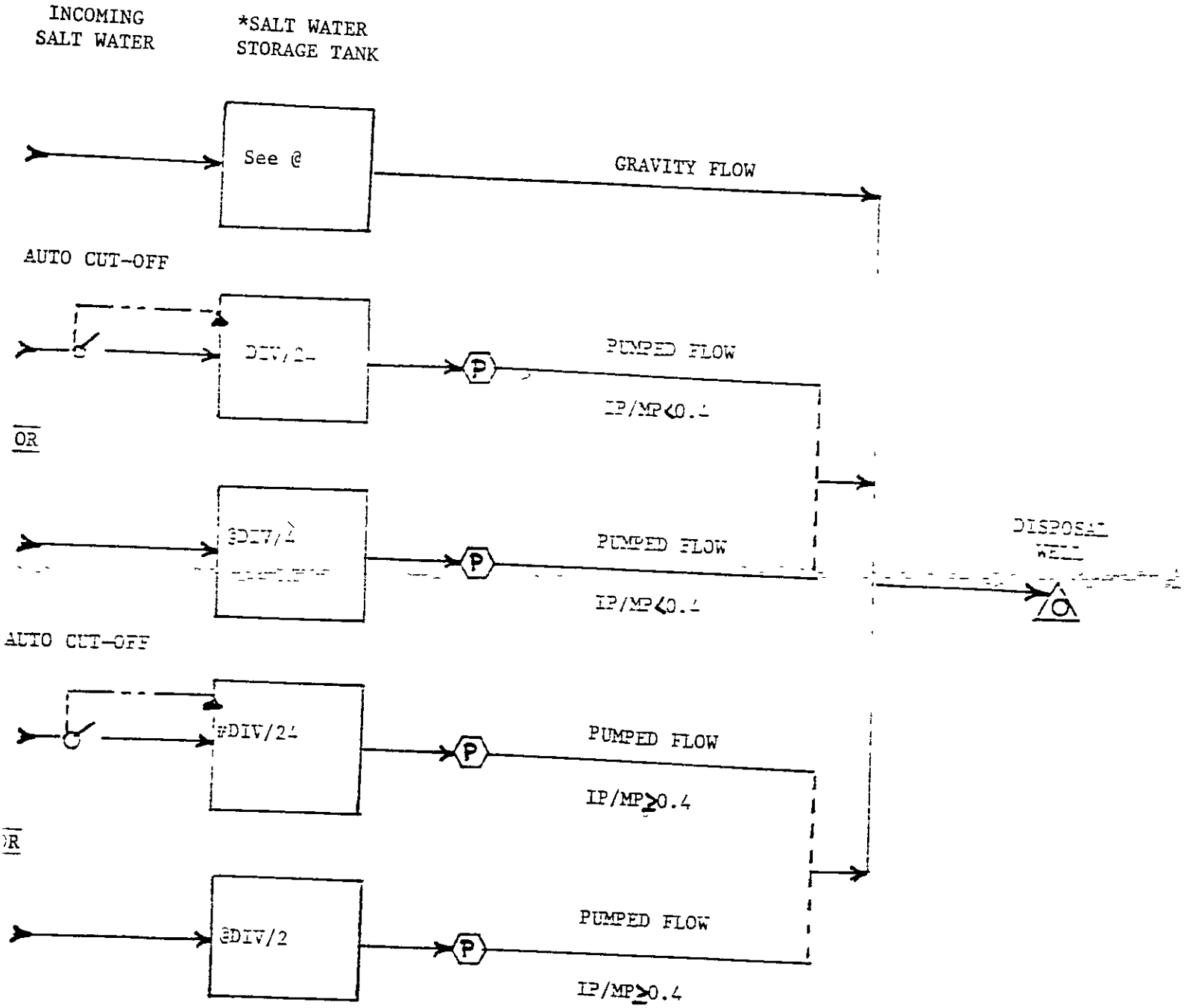

@ 100 barrel minimum or DTV if < 100 BBL/Day.

* Salt Water Storage Tanks must be surrounded by impermeable firewalls capable of holding 1.5 times the volume of the largest tank enclosed within the dike walls.

The cut-off switch must be situated on the salt water storage tank to provide a storage capacity equal to DTV24 (BBLS) above the cut-off level.

TRANSFER STATION REQUIREMENTS

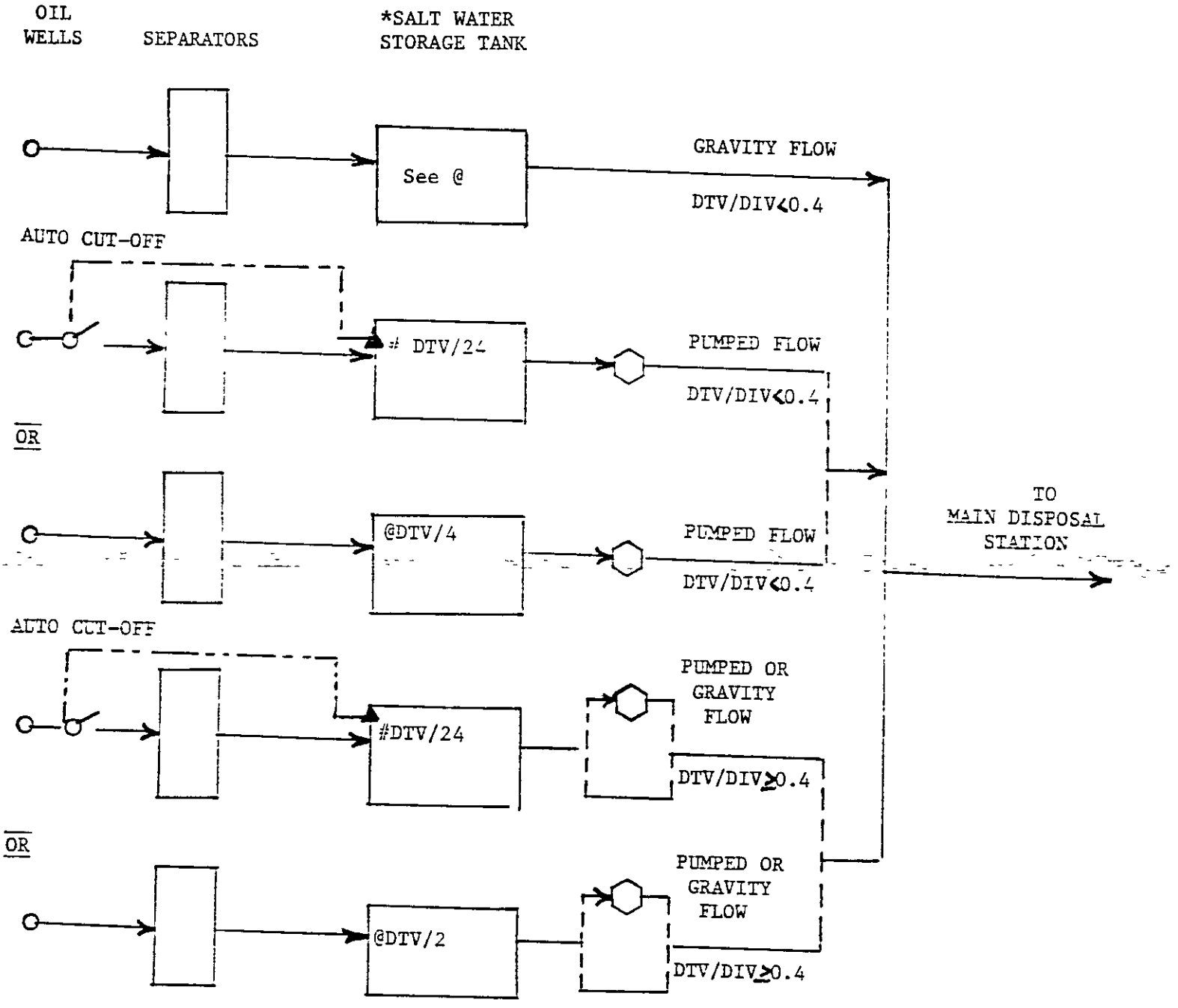

@ 100 barrel minimum or DTV if < 100 BBL/Day.

* Salt Water Storage Tanks must be surrounded by impermeable firewalls capable of holding 1.5 times the volume of the largest tank enclosed within the dike walls.

The cut-off switch must be situated on the salt water storage tank to provide a storage capacity equal to DTV24 (BBLS) above the cut-off level.

A F F I D A V I T
OF FINANCIAL RESPONSIBILITY

STATE OF LOUSIANA §
§ KNOW ALL MEN BY THESE PRESENTS, THAT:
PARISH OF CADDO §

BEFORE ME, the undersigned Notary Public, duly qualified and acting as such in and for the above Parish, State aforesaid, on this day personally appeared WILLIAM J. O'BRIEN, III, President and Chief Executive Officer of O'Brien Operating Company, known to me to be said person and officer, and, after being duly sworn, did state and declare, in his stated capacity, that O'Brien Operating Company, a Louisiana corporation, whose business address is Post Office Box 6020, Shreveport, Louisiana 71136-6020, owns assets within the State of Arkansas in excess of liabilities in an amount sufficient to enable it to comply fully with Acts 1983, No. 902 of the State of Arkansas as by law required.

THUS DONE and PASSED before me, the undersigned Notary Public, in the City of Shreveport, Caddo Parish, Louisiana, in the presence of the undersigned competent witnesses, on this 4th day of September, 1990.

WITNESSES:

O'BRIEN OPERATING COMPANY

BY: William J. O'Brien III
WILLIAM J. O'BRIEN, III
President and
Chief Executive Officer

Janin Hudson Jones
JANIN HUDSON JONES, Notary Public
Caddo Parish, Louisiana
My Commission is for Life

RECEIVED
SEP 5 1990
OIL & GAS COMMISSION

MAGNETIC SYSTEMS • INC • 405-235-1138 • por/PREFOLDED DUPLICATOR ROLL • PATENT NO 4,270,911 • DIGITAL

Union County Arkansas Williams #1 Parnell Outpost-E. Lisbon Fld. 13-17S-16W

Well: P. F. Williams #1 Parnell Results DGA

Loc'n Sec 13-17S-16W, C SW NE, 1850' NE/abnd prod, 2 mi NW/El Dorado

Spud 8-27-62 Comp 9-18-62 Elev: 251' grd, 256' DF, 257' KB TD 6749' C/R P. Williams Drlg Co

Casing 8 5/8" 987'/350 sx

Prod Zone: None

IP None

Comp Info Crd 6684-6709' (Buck), rec 26', 25' red sh & anhy, 1' dolomitic sh, Crd 6709-29' (Smk), rec 21', 4½' dolomitic sh, 13' lt, xln to ool, tltely cmtd, no PGP, NS, 1' lt, ool, tite, NS, 1' lt, ool, fair PGP w/qd oil stain & odor, 1' lt, ool, tltely cmtd, no PGP, ½' lt, ool, low PGP, sll odor, no visible stain, TD 6749', ran IEL to btm, no SWS or tests

Tops (Elec Log) Wx 1490', Nac 2220', Sara 2330', B/An 2506', Mealdn 2510', Graves 2678', 1st Bfos 2822', Tokio 2951', L/Cret (Jas) 3074', Hogg Mkr 3238', CV 4629', Buck 6670', Smk 6710', por 6719'

13098

Date: 9-21-62 Card No: 7 Ark.

O'BRIEN OPERATING COMPANY

November 5, 1990

Arkansas Oil and Gas Commission
P.O. Box 1472
El Dorado, AR 71731-1472

Re: John Parnell etal #2
Sec. 13-17S-16W
Union County, Arkansas

Gentlemen:

Enclosed please find the following material relative to the referenced well:

1. Producers Certificate of Compliance & Authorization to Transport Oil or Gas

2. Well Completion and Recompletion Report

3. Cement Bond Log

4. Dual Induction-FDC-CNL-GR Log

O'Brien Operating Company respectfully request that the logs included be held confidential for 90 days.

We hope that you find everything in order and if you have any questions, please advise.

Very truly yours,

O'BRIEN OPERATING COMPANY

J. R. Gordon
Production Manager

JRG/jlw
Enclosures

MAILING ADDRESS P O BOX 6020 • SHREVEPORT, LA 71136-6020 TELEPHONE (318) 869-3247
STREET ADDRESS 5925 LINE AVENUE • SHREVEPORT, LA 71106 FACSIMILE (318) 868-9835

HRS

HALLIBURTON RESERVOIR SERVICES

A Division of Halliburton Company

FORM 3502

WORK ORDER CONTRACT AND PRE-TREATMENT DATA

ATTACH TO INVOICE & TICKET NO 004339

DISTRICT Bossier City, LA.

DATE 10-16-90

TO HALLIBURTON RESERVOIR SERVICES YOU ARE HEREBY REQUESTED TO FURNISH EQUIPMENT AND SERVICEMEN TO DELIVER AND OPERATE THE SAME AS AN INDEPENDENT CONTRACTOR TO Shuler Drlg Co. (CUSTOMER) AND DELIVER AND SELL PRODUCTS SUPPLIES AND MATERIALS FOR THE PURPOSE OF SERVICING

WELL NO 2 LEASE PARNELL SEC. TWP RANGE

FIELD El Dorado COUNTY UNION STATE ARK OWNED BY O'Brien

THE FOLLOWING INFORMATION WAS FURNISHED BY THE CUSTOMER OR HIS AGENT

FORMATION NAME TYPE

FORMATION THICKNESS FROM TO

PACKER TYPE SET AT

TOTAL DEPTH MUD WEIGHT

BORE HOLE

INITIAL PROD OIL BPD H_2O BPD GAS MCF

PRESENT PROD OIL BPD H_2O BPD GAS MCF

	NEW USED	WEIGHT	SIZE	FROM	TO	MAX ALLOW PSI
CASING						
LINER						
TUBING						
OPEN HOLE						SHOTS/FT
PERFORATIONS						
PERFORATIONS						
PERFORATIONS						

PREVIOUS TREATMENT DATE TYPE MATERIALS

TREATMENT INSTRUCTIONS TREAT THRU TUBING ☐ ANNULUS ☐ CASING ☐ TUBING/ANNULUS ☐ HYDRAULIC HORSEPOWER ORDERED

Open Hole [illegible]

CUSTOMER OR HIS AGENT WARRANTS THE WELL IS IN PROPER CONDITION TO RECEIVE THE PRODUCTS SUPPLIES MATERIALS, AND SERVICES

As consideration the above named Customer agrees THIS CONTRACT MUST BE SIGNED BEFORE WORK IS COMMENCED

a) To pay Halliburton Reservoir Services (hereinafter called Halliburton) in accord with the rates and terms stated in Halliburton's current price list Invoices are payable NET by the 20th of the following month after date of invoice Upon Customer's default in payment of Customer's account by the last day of the month following the month in which the invoice is dated Customer agrees to pay interest thereon after default at the highest lawful contract rate applicable but never to exceed 18% per annum In the event it becomes necessary to employ attorneys to enforce collection of said account Customer agrees to pay all collection costs and attorney fees in the amount of 20% of the amount of the unpaid account

b) To defend indemnify release and hold harmless Halliburton its divisions subsidiaries parent and affiliated companies and the officers directors employees agents and servants of all of them from and against any claims liability expenses attorneys fees and costs of defense to the extent permitted by law for

1 Damage to property owned by in the possession of or leased by Customer and/or the well owner (if different from Customer) including but not limited to surface and subsurface damage The term well owner shall include working and royalty interest owners

2 Reservoir formation or well loss or damage subsurface trespass or any action in the nature thereof

3 Personal injury or death or property damage (including but not limited to damage to the reservoir formation or well) or any damages whatsoever growing out of or in any way connected with or resulting from pollution subsurface pressure losing control of the well and/or a well blowout or the use of radioactive material

The defense indemnity release and hold harmless obligations of Customer provided for in this Section b) and Section c) below shall apply to claims or liability even if caused or contributed to by Halliburton's negligence strict liability or the unseaworthiness of any vessel owned operated or furnished by Halliburton or any defect in the data products supplies materials or equipment of Halliburton whether in the preparation design manufacture distribution or marketing thereof or from a failure to warn any person of such defect Such defense indemnity release and hold harmless obligations of Customer shall not apply where the claims or liability are caused by the gross negligence or willful misconduct of Halliburton The term Halliburton as used in said Sections b) and c) shall mean Halliburton its divisions subsidiaries parent and affiliated companies and the officers directors employees agents and servants of all of them

c) That because of the uncertainty of variable well conditions and the necessity of relying on facts and supporting services furnished by others Halliburton is unable to guarantee the effectiveness of the products supplies or materials nor the results of any treatment or service nor the accuracy of any chart interpretation research analysis job recommendation or other data furnished by Halliburton Halliburton personnel will use their best efforts in gathering such information and their best judgment in interpreting it but Customer agrees that Halliburton shall not be liable for and Customer shall indemnify Halliburton against any damages arising from the use of such information

d) That Halliburton warrants only title to the products supplies and materials and that the same are free from defects in workmanship and materials THERE ARE NO WARRANTIES EXPRESS OR IMPLIED OF MERCHANTABILITY FITNESS OR OTHERWISE WHICH EXTEND BEYOND THOSE STATED IN THE IMMEDIATELY PRECEDING SENTENCE Halliburton's liability and Customer's exclusive remedy in any cause of action (whether in contract tort breach of warranty or otherwise) arising out of the sale or use of any products supplies or materials is expressly limited to the replacement of such products supplies or materials on their return to Halliburton or at Halliburton's option to the allowance to the Customer of credit for the cost of such items In no event shall Halliburton be liable for special incidental indirect punitive or consequential damages

e) That Customer shall at its risk and expense attempt to recover any Halliburton equipment tools or instruments which are lost in the well and if such equipment tools or instruments are not recovered Customer shall pay Halliburton its replacement cost unless such loss is due to the sole negligence of Halliburton If Halliburton equipment tools or instruments are damaged in the well Customer shall pay Halliburton the lesser of its replacement cost or the cost of repairs unless such damage is caused by the sole negligence of Halliburton In the case of equipment tools or instruments for marine operations Customer shall in addition to the foregoing be fully responsible for loss of or damage to any of Halliburton's equipment tools or instruments which occurs at any time after delivery to Customer at the landing until returned to the landing unless such loss or damage is caused by the sole negligence of Halliburton

f) To waive the provisions of the Deceptive Trade Practices - Consumer Protection Act to the extent permitted by law

g) That this contract shall be governed by the law of the state where services are performed or materials are furnished

h) That Halliburton shall not be bound by any changes or modifications in this contract except where such change or modification is made in writing by a duly authorized executive officer of Halliburton

I HAVE READ AND UNDERSTAND THIS CONTRACT AND REPRESENT THAT I AM AUTHORIZED TO SIGN THE SAME AS CUSTOMER'S AGENT

SIGNED Mike M. White CUSTOMER

DATE 10-16-90

TIME 0130 A M

that the Fair Labor Standards Act of 1938, as amended, has been complied with in the of goods and/or with respect to services furnished under this contract.

O'BRIEN OPERATING COMPANY

September 5,1990

Arkansas Oil & Gas Commission
P.O. Box 1472
El Dorado, AR 71731-1472

Re: **NOTICE OF INTENTION TO DRILL**
John Parnell et al No. 2
Section 13 - T 17S - R 16W
Union County, Arkansas

Gentlemen:

Enclosed please find the following material relative to the referenced well:

1. Notice of Intention To Drill;
2. Surveyor's Plat;
3. O'Brien Operating Company Check for $150.00;
4. Affidavit of Financial Responsibility.

We hope you will find everything in order, and should you have any questions, please call.

Very truly yours,

O'BRIEN OPERATING COMPANY

J. R. Gordon
Production Manager

RECEIVED
SEP 5 1990
ARKANSAS OIL & GAS COMMISSION

JRG/jlw

Enclosures

MAILING ADDRESS P O BOX 6020 • SHREVEPORT, LA 71136-6020 TELEPHONE (318) 869-3247
STREET ADDRESS 5925 LINE AVENUE • SHREVEPORT, LA 71106 FACSIMILE (318) 868-9835

COLEMAN CEMENTING INC.
3043 New London Road
Strong, Arkansas 71765
24 Hr Service
862-0863

№ 7018

JOHN COLEMAN
MOBILE 862-5621
UNIT 61 or 80

North Agnes Rd.

DATE	ORDER NO	CONTRACTOR	WELL NAME	NUMBER
10/9/90		R-7	Pannell #2	

CUSTOMER'S NAME: Shelby Duly
ADDRESS: O'Brien Operating Co.
CITY:

CEMENTED BY: KMG
TRUCK DRIVER: Ric Rio
SIZE OF CASING:
DEPTH OF HOLE:

Service Instructions: Cement 754 cf of 8¾ mix 12¼ PLC.

ITEM	QUAN	UNIT	MATERIAL OR SERVICES	UNIT PRICE	AMOUNT	REMARKS
Pumping						
Mileage	2					
Packer Rental						
Plug						
Acid		Gals				Bags Returned / Amount Credit
Inhibitor		Gals				
Centralizers		Ea				
Float Shoe		Ea				
Float Collar		Ea				
Scratchers		Ea				
Cement Basket						
Thread Lock		lb				
Clamps		Ea				
Guide Shoe	1	Ea				
Class "H" Cement	200	94	Light 3% CC			
Class A Cement	150		Class A 3% CC			
Calcium Chloride	11	100				
Cemad I						

The undersigned hereby certifies that the materials listed above were received and services were satisfactory

[illegible]
AUTHORIZED AGENT

Total	
Delivery Charge	
5% Sales Tax	
TOTAL	[redacted]

GEOLOGY WORKSHEET FOR SWD APPLICATION

DATE July 19, 1991

OPERATOR O'Brien Operating Co.

WELL NAME John Parnell #2

LOCATION 1000' FWL & 2000' FNL SEC 13 TWP 17s RGN 16w

FIELD Agnes Road North

INJECTION ZONE Cotton Valley in zone only TOP 4570 BASE 4650 THICKNESS 80'

IS INJECTION ZONE CORRECT? (X)Y ( )N

DOES WELL TOTALY PENETRATE PROPOSED ZONE? (X)Y ( )N

DEEPEST FORMATION CONTAINING LESS THAN 10,000 mg/l TDS

(X) CANE RIVER
( ) WILCOX
( ) NACATOCH

TOP cased BASE 1000

IS PERMIT CORRECTLY FILED UNDER C-7 (X)Y ( )N C-8 ( )Y ( )N

COMMENTS:

DK

O'BRIEN OPERATING COMPANY
APPLICATION FOR SALTWATER DISPOSAL
JOHN PARNELL NO. 2
AGNES ROAD NORTH FIELD
UNION COUNTY, ARKANSAS
EXHIBIT XV

Disposal volumes will be monitored by the installation of a Halliburton turbine meter and the volumes recorded daily. Disposal system pressures will be monitored by pressure gauges installed at the discharge of the disposal pump and on the tubing of the disposal well and recorded daily.

ARKANSAS
OIL AND GAS COMMISSION

El Dorado

001597

No. 51160

Date 7-19-91

Received from O'Brien Operating Co.

the sum of One hundred & 00/100 .Dollars
(Requirements of Sections 6 and 25 Act 105 1939)

Assessment on _____ Barrels

of Oil at _____ Mills per Barrel - - - - - - $ _____

Assessment on _____ Mcf

of Gas at _____ Mill per Mcf - - - - - - $ _____

Assessment on _____ Barrels

of Brine _____ per 1 000 bbls - - - - - - $ _____

Drilling Permit No _____

_____ at $150 00 each - - - - - - $ _____

SWD _____ $ _____

Total Amount _____ $ _____

Parnell # 2

ARKANSAS OIL AND GAS COMMISSION

By DM

Disbursing Agent

WELL DATA SHEET

TYPE OF WELL: SALT WATER DISPOSAL
API: 03-139-12,844
SERIAL: 34,337
COMMENCE DATE: 10/08/90
COMPLETION DATE: 10/04/91
FIELD: AGNES ROAD NORTH
ZONE: COTTON VALLEY
COUNTY: UNION
OPERATOR: O'BRIEN OPERATING COMPANY
LEASE: JOHN PARNELL
NUMBER: 2
UNIT DESCRIPTION: 80 ACRES STAND-UP UNIT W/2 NW/4
UNIT SIZE: 80
PLUGGED BACK TOTAL DEPTH. 5,490
TOTAL DEPTH. 6,001
ELEVATION: 252.8
LOCATION: 1000'FWL & 2000'FNL
SECTION-TOWNSHIP-RANGE: 13-17S-16W
ALLOWABLE FACTOR: 0 %
ORDER:
DATE STAMPED: 10/08/91

CASING, TUBING, PERFORATING AND COMPLETION PROGRAM USED IN WELL

	CASING SIZE		WEIGHT		DEPTH			CEMENT
CONDUCTOR:		in		lbs	0	ft		
SURFACE:	8 5/8	in	24	lbs	762	ft		350 sks
INTERMEDIATE:		in		lbs	0	-	0 ft	
PRODUCTION:	5 1/2	in	17	lbs	5,730	ft		665 sks
LINER:		in		lbs	0	-	0 ft	
TUBING:	2 7/8	in	6.5	lbs	4,484	ft		

PACKER: 4484'
PERFORATIONS: SIZE: 0.4
NO. PER FOOT. 4
PERFORATED INTERVALS: 4575' - 4590'
ACIDIZED: 4575' -4590' W/ 1000 GALS.
FRACTURED:

INITIAL PRODUCTION DATA

DATE TESTED: / /
LENGTH OF TEST:
PRODUCING METHOD: F
FLOWING WELLHEAD PRESSURE: 0 psia
CHOKE SIZE:
SHUT-IN WELLHEAD PRESSURE: 0
OIL: 0 Bbls
GAS 0 MCFD
BSW: 0 %
GOR: 0 CF/Bbls
GRAVITY: API
OPEN FLOW: 0 MCFD
BHP: 0 psia @ 0 ft

TEST DATA

DATE TESTED: / /
MAXIMUM DELIVERABILITY: 0 MCFD
ABSOLUTE OPEN FLOW: 0 MCFD
SHUT-IN WELLHEAD PRESSURE: 0 psia
ALLOWABLE: 0 MCFD

OIL PURCHASER:
GAS PURCHASER: 0 % 0 % 0 % 0 % 0 %
ABANDONED DATE: / /
REMARKS:

Dec 13 1996 pass

API # 03-139-12,844 SERIAL # 34,337

FIELD Agnes Rd. North COUNTY Union

OPERATOR O'Brien Operating Co.

LEASE John Parnell NUMBER 2

ZONE Cotton Valley

LOCATION 1000' FWL & 2000' FNL SC TW RG 13-17s-16w

DATE APPROVED 10-16-91 COMPLETED DATE 10-4-91

TOTAL DEPTH 6001' PBTD 5490'

COMPLETION PROGRAM

CONDUCTOR:

SURFACE: 8 5/8" set @ 762' w/ 350 sks

INTERMEDIATE:

PRODUCTION: 5 1/2" set @ 5730' w/ 665 sks

TUBING: 2 7/8" set @ 4484'

PACKER: 4484'

PERFORATED INTERVALS: 4575' - 4590'

INJECTION DATA

INJECTION PRESSURE 2288 # ANNULUS PRESSURE 0

AMT. OF INJECTION . ALLOWABLE 10,850 BBLWPM

DATE PLUGGED:

TEST DATA

DATE TESTED ~~Oct~~ Nov 5 1991. PASS X FAIL

NUMBER OF TIMES TESTED
(MAXIMUM 3 TIMES)

SECTION 13 TOWNSHIP 17 SOUTH RANGE 16 WEST

UNION COUNTY, ARKANSAS

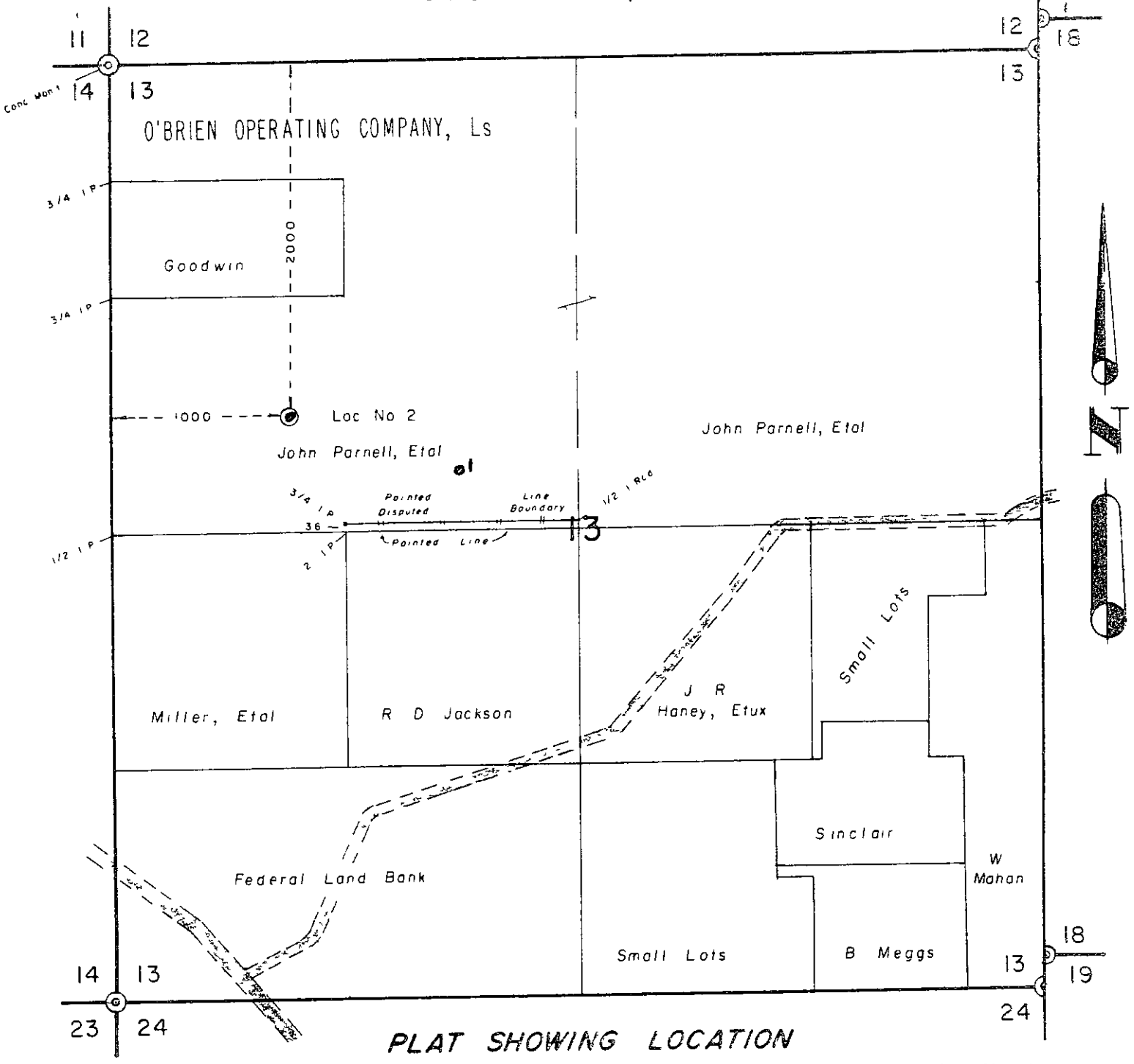

PLAT SHOWING LOCATION

O'BRIEN OPERATING COMPANY —— JOHN PARNELL, ETAL No. 2

Located 2000 ft from the North line and 1000 ft from the West line

of Section 13 Township 17 South, Range 16 West,

Union County, Arkansas

MARVIN T KENT
REGISTERED
LAND SURVEYOR
STATE OF
ARKANSAS
NO 657

I HEREBY CERTIFY THAT THE ABOVE PLAT CORRECTLY REFLECTS THIS LOCATION AS STAKED ON THE GROUND

Marvin T. Kent

MARVIN T KENT
REG LAND SURVEYOR, ARKANSAS NO 657

Ground Elevation No 2= 252.8 ft

DATE [illegible] 22 1950

SCALE = 800'

AOGC—1—(93)

ARKANSAS OIL AND GAS COMMISSION
P.O. Box 1472
El Dorado, Arkansas 71731-1472

Producers Certificate of Compliance and Authorization to Transport Oil or Gas from Lease

Well JOHN PARNELL # 2 No 2 (Sec) 13 (Twp) 17S (Rge) 16W County UNION

Operator JOHN C. ROGERS Field ~~AGNES RD NORTH~~

Address all correspondence concerning this form to JOHN C. ROGERS

Street 434 SO. BRADLEY City ELDORADO State AR Zip 71730

Phone ~~501-8638861~~ Extension N/A

The above named operator hereby authorizes _____ (Name of First Purchaser)

Whose principal place of business is _____ (Street) _____ (City) _____ (State & Zip)

And whose field address is _____

To Purchase _____ % of the Oil ( ) Gas ( ) produced from the lease designated above until further notice

Other Purchasers Purchasing Oil and/or Gas from this Well or Wells

_____ (Name of Purchaser) _____ % _____ (Name of Purchaser) _____ %

Remarks

CHANGE IN OWNERSHIP EFFECTIVE 9-1-95

FORMER OPERATOR: O'BRIEN OPERATING CO.
BOX 6020
SHREVEPORT, LA. 71136

THIS WELL IS A SWD WELL AND DOES NOT PRODUCE OIL

RECEIVED
ARK OIL & GAS COM.
95 SEP 15 AM 10:38

Approval of the Oil and Gas Commission of a change in operating ownership shall not release the previous operator from any environmental liability then existing or from the obligation to plug and abandon wells upon the above lease

The undersigned certifies that this report has been examined by me and to the best of my knowledge is true, correct complete and that the rules and regulations of the Arkansas Oil and Gas Commission have been complied with except as noted above and that the purchaser(s) is (are) authorized to purchase the percentage of oil and/or gas produced from the above described property and that this authorization will be valid until further notice of the purchaser named herein or until cancelled by the Arkansas Oil and Gas Commission

Executed this the _____ day of _____ 19____

APPROVED Sept 19, 1995
ARKANSAS OIL & GAS COMMISSION
By Shirley Knight
No SH 876

New Operator John C. Rogers
(Affiant)

O'BRIEN OPERATING CO.
Existing Operator
Morgan P. O'Brien (Affiant)
MORGAN P. O'BRIEN
EXECUTIVE V.P.

ACI—2990

INSTRUCTIONS

This certificate shall be executed and filed in triplicate with the Oil and Gas Commission, El Dorado, Arkansas, covering each lease from which oil and/or gas is produced A separate certificate shall be filed for each purchaser authorized to purchase oil and/or gas from a lease

After said certificate has been approved by the Arkansas Oil and Gas Commission one copy shall be returned to the Operator, one copy forwarded to the Purchaser, and one copy retained by the Arkansas Oil and Gas Commission

A new certificate shall be filed to cover each change in operating ownership and each change in purchasers

This certificate when properly executed and approved by the Arkansas Oil and Gas Commission shall constitute an authorization to a pipeline or other carrier to purchase oil and/or gas from the lease named therein and shall remain in full force and effect until

(a) Operating ownership changes, or

(b) The Purchaser is changed, or

(c) The authorization is cancelled by the Arkansas Oil and Gas Commission

If any of the rules and regulations of the Arkansas Oil and Gas Commission have not been complied with at the time this report is filed, explain fully under the heading "Remarks"

In all cases where this certificate is filed to cover a change in operating ownership or a change in the purchaser designated to purchaser oil and/or gas, show under "Remarks" the previous owner or operator and the purchaser previously authorized to transport the oil and/or gas

AOGC — 4a

ARKANSAS OIL AND GAS COMMISSION
P.O. Box 1472
EL DORADO, ARKANSAS 71731-1472

AUTHORITY TO PRODUCE

TO O'Brien Operating Company
P.O. Box 6020
Shreveport, Louisiana 71136-6020

SUPPLEMENT NO CC - 114 - SA

DATE December 7, 1990

COMPLETION X RECOMPLETION _____

REWORK _____ CHANGE OR CORRECTION _____

WELL NAME John Parnell NO 2 FIELD Agnes Road North

LOCATION 1000' FWL & 2000' FNL SEC 13 TWP 17S RGE 16W

COUNTY Union

PRODUCING INTERVAL Cotton Valley FROM 5533 FT, TO 5542 FT

Gentlemen

This will be your authority to produce the above well at the rate of 80 (BBLS) and/or _____ (MCF) per day, effective 7 A M, November 1, 1990

This is authority for Enron Oil Trading & Transportation to connect to this well and run this assignment allowable upon receipt of approved Form 4 covering this lease

REMARKS New Completion.

cc Enron Oil Trading & Transportation
P.O. Box 1188
Houston, Texas 77251-1188
and
3460 Industrial Drive
Bossier City, Louisiana 71112

Yours truly,

By Shirley Knight
SHIRLEY KNIGHT, STATISTICIAN II

ADC CDC -2474

10M—2-69—00545—AP&SCo AOGC-4—(56)

Arkansas Oil and Gas Commission

EL DORADO, ARKANSAS

Producers Certificate of Compliance and Authorization to Transport Oil or Gas from Lease

Lease John Parnell #2 (Sec) 13 (Twp) 17S (Rge) 16W County Union

Producer O'Brien Operating Company Field Agnes Road North

Address all correspondence concerning this form to: O'Brien Operating Co.

Street P.O. Box 6020 City Shreveport State LA 71136-6020

The above named producer hereby authorizes Enron Oil Trading & Transportation
(Name of Transporter)

Whose principal place of business is 1400 Smith St. (Street) Houston (City) Texas 77002 (State)

And whose field address is 3460 Industrial Dr. Bossier City, LA 71112

To transport ~~100~~ % of the Oil (X) Gas ( ) produced from the lease designated above until further notice.

Other transporters transporting oil from this lease are:

None (Name of Transporter) ____ % ____ (Name of Transporter) ____ %

Remarks:

The undersigned certifies that this report has been examined by me and to the best of my knowledge is true, correct, complete and that the rules and regulations of the Arkansas Oil and Gas Commission have been complied with except as noted above and that the transporter(s) is (are) authorized to transport the percentage of oil produced from the above described property and that this authorization will be valid until further notice of the transporter named herein or until cancelled by the Arkansas Oil and Gas Commission.

Executed this the 15th day of November 1989

APPROVED: Dec 7, 1990
ARKANSAS OIL & GAS COMMISSION

By Shirley Knight

No. CC 1755

O'BRIEN OPERATING COMPANY
(Company or Operator)

J R Gordon
(Affiant)

PARNELL, JOHN 2

API #:	0313912844	**County:**	UNION (AR)	**Township:**	17S	**Last Completion Date:**	10-29-1990
Operator:	O BRIEN ENERGY COMPANY	**Lat, Lon:**	33.2452588, -92.7113187	**Range:**	16W	**Wellbore Count:**	1
Status:	P & A	**Field:**	AGNES ROAD NORTH	**Q/Q:**			
Completion Type:	DISPOSAL	**Survey:**		**Spud Date:**	10-08-1990		
GL:	253 ft	**Section:**	13	**First Completion Date:**	10-29-1990		

PERMITS

PERMIT # UNKNOWN

GENERAL

Operator:	CRUDE OIL, LLC	**Lease Name:**	PARNELL, JOHN	**Address:**		**Filing Purpose:**	Other
TD:		**Received:**		**Issued:**	08-30-1990	**RRC Lease ID #:**	27236
Phone:		**Type:**	V				

SURFACE LOCATION & ACREAGE

District:		**Section:**	13	**Survey:**		**County:**	UNION
Block:		**Abstract:**					

FIELD

Field Name:	AGNES ROAD NORTH	**Permit Type:**	DISPOSAL

WELLBORES

API # 031391284400

WELLBORE

API #:	Formation:	True Vert. Depth:	Horizontal Length:
031391284400	COTTON VALLEY	6,001 ft	

Copyright ©2022 by Enverus, Inc. PO Box 5545 Austin, TX 78763 www.enverus.com

No part of this document may be reproduced or transmitted in any form or by any means, electronic, mechanical, photocopying, recording, or otherwise, without prior written permission.

Trajectory:	Total Depth:	DI Lateral Length:	Elevation:
V	6,001 ft	967 ft	253 ft

WELLBORE TRAJECTORY

No trajectory data available for this well.

WELL DESIGN

CASING

No casing data available for this well.

LINER

No liner data available for this well.

TUBING

No tubing data available for this well.

WELL LOGS

RASTER LOGS

No raster logs available for this well.

COMPLETION

API # 03139128440000

COMPLETION SUMMARY

API #:	Completion Date:	Upper Perf:	Lower Perf:
03139128440000	10-29-1990	4,575 ft	5,542 ft

No treatment job data available for this well.

FORMATIONS

FORMATIONS

No formation data available for this well.

WELL TESTS

PRODUCTION

Copyright ©2022 by Enverus, Inc. PO Box 5545 Austin, TX 78763 www.enverus.com

No part of this document may be reproduced or transmitted in any form or by any means, electronic, mechanical, photocopying, recording, or otherwise, without prior written permission.

No production test data available for this well.

DRILL STEM TESTS

No drill stem test data available for this well.

DRILL STEM TEST PIPE RECOVERY

No pipe recovery data data available for this well.

DRILL STEM TEST FLOW PERIODS

No flow period data available for this well.

PRODUCTION

API # 03139128440000

SUMMARY

Producing Entity:	WELL	**Max Active Wells:**	1	**Cumulative Gas:**		**Oil EUR:**
Reservoir:	COTTON VALLEY	**First Prod Date:**	11-01-1990	**Peak Oil:**	1,834	**Gas EUR:**
District:		**Last Prod Date:**	09-01-1991	**Peak Gas:**		**Oil Gatherer:**
Lease:	PARNELL, JOHN	**Months Producing:**	11	**Daily Oil:**		**Gas Gatherer:**
Latest Well Count:	1	**Cumulative Oil:**	4,372	**Daily Gas:**		

PRODUCTION

Date	Monthly Oil (bbl)	Monthly Gas (Mcf)	Monthly Water (bbl)	Avg Daily Oil (bbl)	Avg Daily Gas (Mcf)	Avg Daily Water (bbl)	Wells	Days
11-01-1990	1,834	0	0	61	0	0	1	0
12-01-1990	1,003	0	0	32	0	0	1	0
01-01-1991	424	0	0	13	0	0	1	0
02-01-1991	228	0	0	8	0	0	1	0
03-01-1991	260	0	0	8	0	0	1	0
04-01-1991	190	0	0	6	0	0	1	0
05-01-1991	160	0	0	5	0	0	1	0
06-01-1991	119	0	0	3	0	0	1	0
07-01-1991	77	0	0	2	0	0	1	0
08-01-1991	48	0	0	1	0	0	1	0
09-01-1991	29	0	0	0	0	0	1	0

Copyright ©2022 by Enverus, Inc. PO Box 5545 Austin, TX 78763 www.enverus.com

No part of this document may be reproduced or transmitted in any form or by any means, electronic, mechanical, photocopying, recording, or otherwise, without prior written permission.

CHART

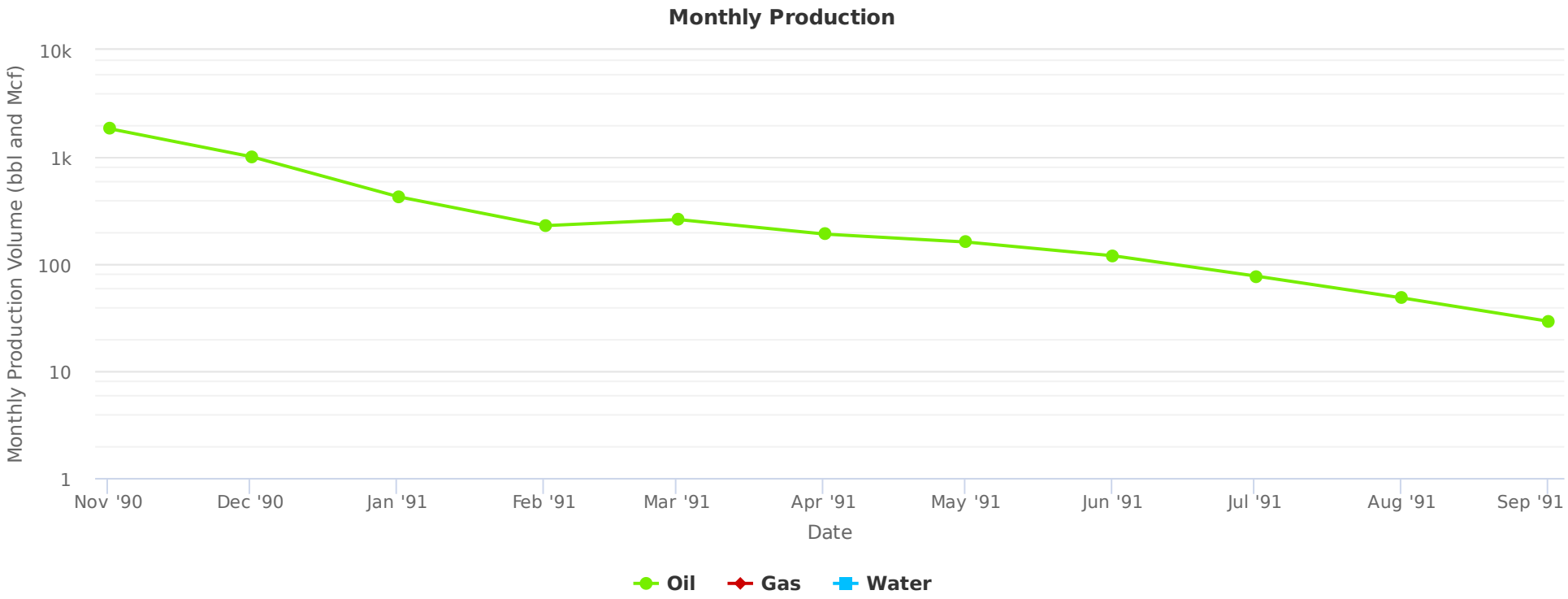

HISTORY

HISTORY

Effective Date	Operator	Activity
10-04-1991	O'BRIEN ENERGY COMPANY	Production
11-01-1990	O'BRIEN ENERGY COMPANY	Production
10-29-1990	O BRIEN ENERGY COMPANY	Completion
10-08-1990	O BRIEN ENERGY COMPANY	Spud
08-30-1990	CRUDE OIL, LLC	Permit

Copyright ©2022 by Enverus, Inc. PO Box 5545 Austin, TX 78763 www.enverus.com

No part of this document may be reproduced or transmitted in any form or by any means, electronic, mechanical, photocopying, recording, or otherwise, without prior written permission.

o 03 139 12,844

34,337

Schlumberger

DUAL INDUCTION - FDC - CNL - GR

COMPANY	O'BRIEN OPERATING
WELL	JOHN PARNELL, etc. NO. 2
FIELD	~~EAST LISBON~~ Agnes Rd. North
COUNTY	UNION
STATE	ARKANSAS

RECEIVED NOV 6 1990 ARKANSAS OIL & GAS COMMISSION

COUNTY	UNION
FIELD	EAST LISBON
LOCATION	2000' FNL & 1000' FWL
WELL	JOHN PARNELL, etc NO. 2
COMPANY	O'BRIEN OPERATING

LOCATION: 2000' FNL & 1000' FWL OF

Other Services: DI/SFL/GR LDT/CNL/GR FMS CORES

API SERIAL NO.	SECT.	TWP.	RANGE
	13	17S	16W

Permanent Datum	GROUND LEVEL	Elev.	252.8 F	Elev.: K.B. 260.0 F
Log Measured From	RKB	7.0 F	above Perm. Datum	D.F. 259.0 F
Drilling Measured From	RKB			G.L. 252.0 F

Date	18-OCT-1990		
Run No.	ONE		
Depth Driller	6000.0 F		
Depth Logger (Schl.)	6002.0 F		
Btm. Log Interval	5998.0 F		
Top Log Interval	765.0 F		
Casing-Driller	8 5/8 @ 762.0 F	@	@
Casing-Logger	765.0 F		
Bit Size	7.875		
Type Fluid in Hole	LIGNO		
Dens. / Visc.	9.50 LB/G	51.0 S	
pH / Fluid Loss	9.5	8.6 C3	
Source of Sample	TANK		
Rm @ Meas. Temp.	1.700 OHMM @	80.0 DEGF	@
Rmf @ Meas. Temp.	1.440 OHMM @	75.0 DEGF	@
Rmc @ Meas. Temp.	2.360 OHMM @	75.0 DEGF	@
Source: Rmf / Rmc	M	C	
Rm @ BHT	.883 OHMM @	130. DEGF	@
Time Circulation Ended	22:00 17-OCT-90		
Time Logger on Bottom	02:30 18-OCT-90		
Max. Rec. Temp.	130. DEGF		
Equip. / Location	8220	SHREVEPORT	
Recorded By	L.J. "JAWS" TERRY		
Witnessed By	SPARO		