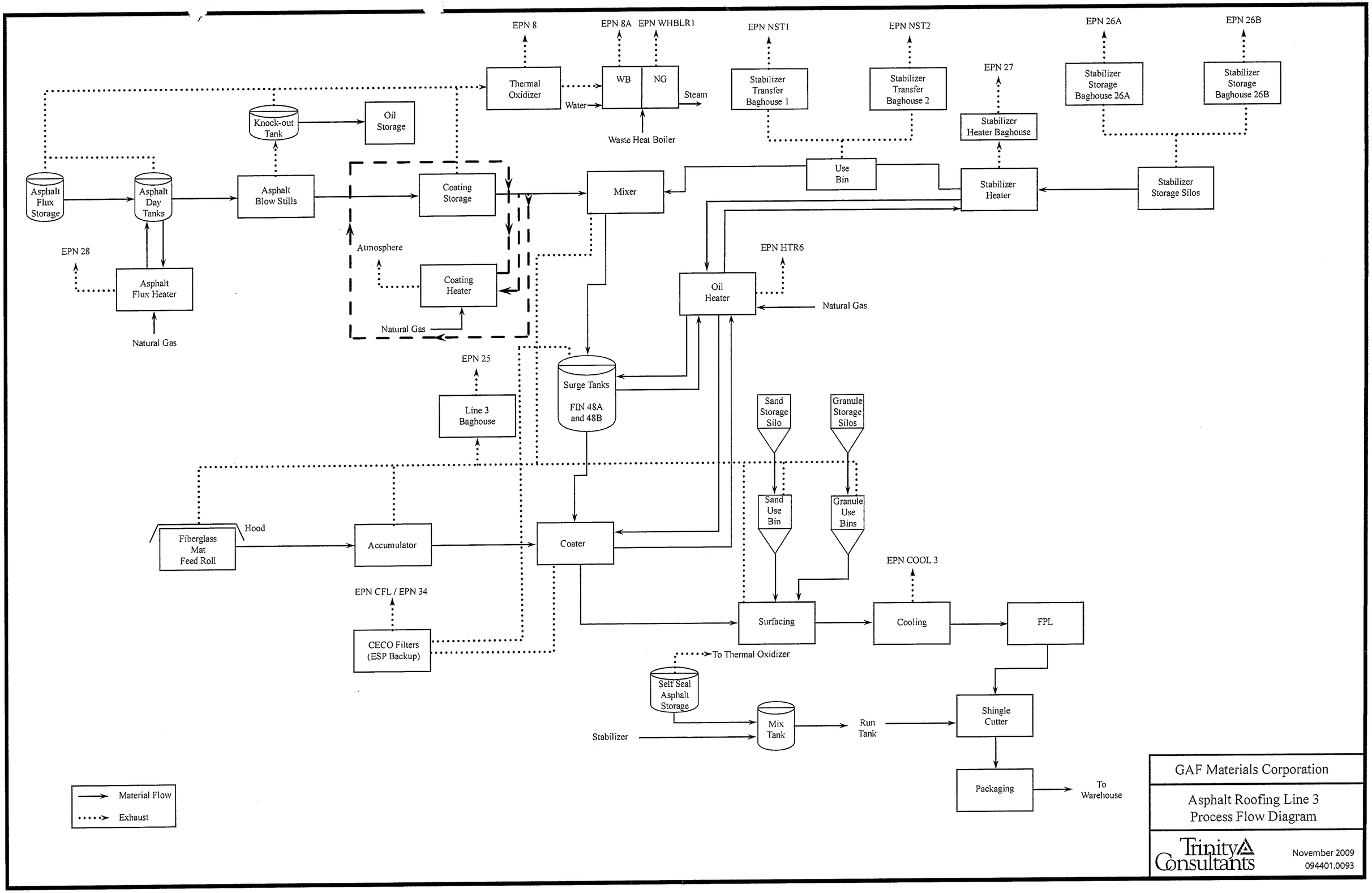
EPN 8
EPN 8A
EPN WHBLR1
EPN NST1
EPN NST2
EPN 26A
EPN 26B
EPN 27
Thermal Oxidizer
WB
NG
Steam
Water
Waste Heat Boiler
Stabilizer Transfer Baghouse 1
Stabilizer Transfer Baghouse 2
Stabilizer Storage Baghouse 26A
Stabilizer Storage Baghouse 26B
Stabilizer Heater Baghouse
Knock-out Tank
Oil Storage
Asphalt Flux Storage
Asphalt Day Tanks
Asphalt Blow Stills
Coating Storage
Mixer
Use Bin
Stabilizer Heater
Stabilizer Storage Silos
EPN 28
Atmosphere
Coating Heater
Asphalt Flux Heater
Natural Gas
Natural Gas
EPN HTR6
Oil Heater
Natural Gas
EPN 25
Line 3 Baghouse
Surge Tanks
FIN 48A and 48B
Sand Storage Silo
Granule Storage Silos
Sand Use Bin
Granule Use Bins
Hood
Fiberglass Mat Feed Roll
Accumulator
Coater
EPN COOL 3
EPN CFL / EPN 34
CECO Filters (ESP Backup)
Surfacing
Cooling
FPL
To Thermal Oxidizer
Self Seal Asphalt Storage
Stabilizer
Mix Tank
Run Tank
Shingle Cutter
Packaging
To Warehouse
Material Flow
Exhaust
GAF Materials Corporation
Asphalt Roofing Line 3
Process Flow Diagram
Trinity Consultants
November 2009
094401.0093