Solutia Inc.

Ingenuity
Productivity
Performance

RECEIVED
MAR 03 2017
AIR ENFORCEMENT BRANCH
U.S. EPA REGION 5

W.G. Krummrich Plant
500 Monsanto Avenue
Sauget, Illinois 62206-1198
Tel: 618.271.5835

February 27, 2017

Director, Air and Radiation Division
United States Environmental Protection Agency
77 West Jackson Blvd.
Chicago, IL 60604-3507

Re: Second Half 2016 Semi-Annual MON Report
Source Name: Solutia Inc., W.G. Krummrich Plant
Facility ID # 163121AAC

Dear Agency Representative:

Enclosed is the Second Half 2016 Compliance Report required by 40 CFR 63.2520(e), of the Miscellaneous Organic NESHAP (MON) MACT Standard. The enclosed report provides the required information for the Solutia Inc., W.G. Krummrich Facility located in Sauget, Illinois.

If you should have any question, or additional information is needed, please contact Donn Haines (the W.G. Krummrich Environmental Specialist) at (618) 482-6545 or via email dihain@eastman.com.

Sincerely,

Michael Todd Ecker
Plant Manager
W.G. Krummrich Plant

Enclosures

cc: Rick Lauer, Plant Manager – Occidental Chemical Corporation via email
IEPA Air Compliance Unit – Springfield, Illinois
IEPA Regional Office – Collinsville, Illinois

Miscellaneous Organic Chemical NESHAP
Subpart FFFF

Compliance Report

Solutia Inc. W.G. Krummrich Plant
500 Monsanto Ave.
Sauget, IL 62206-1198

February 27, 2017

Solutia Inc. W.G. Krummrich Plant
Compliance Report
40 CFR 63.2520(e)
Due: March 1, 2017

Reporting Period: July 1, 2016 through December 31, 2016

Statement:

I certify that this document was prepared under my direction or supervision in accordance with a system designed to assure that qualified personnel properly gather and evaluate the information submitted. Based on my inquiry of the person or persons who manage the system, or those persons directly responsible for gathering the information, the information submitted is, to the best of my knowledge and belief, true, accurate, and complete.

Michael Todd Ecker 02/27/17

Michael Todd Ecker Date

Background:

Solutia Inc. operates the facility located at 500 Monsanto Ave. in Sauget, Illinois. It consists of several operating departments which include two units subject to the Miscellaneous Organic Chemical Manufacturing NESHAP (MON) standard.

Operating Departments subject to MON:

- Flexsys – This unit consists of two batch operations in parallel that manufacture rubber antidegradants. The regulated hazardous air pollutant (HAP) is Methyl Isobutyl Ketone (MIBK).

- ACL – This unit consists of a continuous operation that manufactures trichloro-isocyanurate. The primary HAP is chlorine. Trace levels of other HAP chemicals have been taken into account in making applicability and control determinations. *Please note this unit is operated by Solutia, but owned by Occidental Chemical Corp.*

This report is organized in separate sections with information in the first section for the Flexsys Operating Department and in the second section for the ACL Operating Department for each of the required elements.

Flexsys Operating Department
Solutia Inc. W.G. Krummrich Plant
Compliance Report

Reporting Period: July 1, 2016 through December 31, 2016

I. **Start Up, Shutdown and Malfunctions**:
There were no SSM events during the reporting period which resulted in excess emissions.

II. **Deviations:**
There were no deviations from any emission limits, operating limits, or work practice standards during the reporting period.

III. No *CEMS in use in the department*

IV. No *new operating scenarios were adopted during the reporting period.*

V. No *PUGs were created for purposes of compliance determinations*

VI. Applicable records and information for periodic reports (referenced subparts):
- Subpart F – Testing of the Heat exchange system was conducted quarterly for the 3rd and 4th quarter of 2016. No leaks were detected.
- Subpart G – Wastewater provisions, the design steam stripper operated at all times during the reporting period within the approved operating ranges when the process was running. At no time was the vent stream (Group 1 wastewater) diverted from the design steam stripper during processing.
- Subpart SS – Closed Vent Systems, the unit (thermal oxidizer 2770934) operated for 4200 hours of the reporting period.
- Subpart UU – LDAR monitoring and repair information.

Equipment	# of components	# of leaks detected	% of leaking components	# of leaks requiring delay of repair
Valves	1158	5	0.43%	0
Pumps	23	1	4.35%	0
Agitators	7	0	0.00%	0
Connectors	3338	0	0.00%	0
Relief devices	42	0	0.00%	0

Note: no compressors subject to Subpart UU requirements are present.

VII. No *process changes, or changes to information submitted in the notification of compliance status report that require reporting occurred during the reporting period.*

ACL Operating Department
Solutia Inc. W.G. Krummrich Plant
Compliance Report

Reporting Period: July 1, 2016 through December 31, 2016

I. **Start Up, Shutdown and Malfunctions**:
There were no SSM events during the reporting period which resulted in excess emissions.

II. **Deviations:**
There were no deviations from any emission limits, operating limits, or work practice standards during the reporting period.

III. No *CEMS in use in the department*

IV. No *new operating scenarios were adopted during the reporting period.*

V. No *PUGs were created for purposes of compliance determinations*

VI. Applicable records and information for periodic reports (referenced subparts):

- Subpart SS – Closed Vent Systems, the unit operated for 3343 hours of the reporting period.

VII. No *process changes, or changes to information submitted in the notification of compliance status report that require reporting occurred during the reporting period.*

Emerald Performance Materials®
Polymer Additives

RECEIVED
MAR 03 2017
AIR ENFORCEMENT BRANCH
U.S. EPA REGION 5

February 23, 2017

CERTIFIED MAIL: 7016 0600 0001 0586 2910
Illinois Environmental Protection Agency
Bureau of Air
Compliance Section (MC40)
1021 N. Grand Avenue East, PO Box 19276
Springfield, IL 62794-9276

CERTIFIED MAIL: 7016 0600 0001 0586 2927
Illinois Environmental Protection Agency
Division of Air Pollution Control
Permit Section (MC11)
1021 N. Grand Avenue East, PO Box 19506
Springfield, IL 62794-9506

CERTIFIED MAIL: 7016 0600 0001 0586 2934
Illinois Environmental Protection Agency
Division of Air Pollution
412 SW Washington Street, Suite D
Peoria, IL 61614

CERTIFIED MAIL: 7016 0600 0001 0586 2941
USEPA (AE-17J)
Air & Radiation Division
77 West Jackson Blvd.
Chicago, IL 60604

Re: 2016 Semi-Annual Title V Compliance Monitoring Report (7/1/2016 – 12/31/2016)
Emerald Performance Materials
Henry, Illinois
CAAPP Permit No. 96030152

Dear Sir or Madam:

Pursuant to Condition 8.6.1 of the above-referenced CAAPP Permit, the Emerald Performance Materials Henry Plant is submitting the 2016 Semi-Annual Monitoring Report for the reporting period of July 1, 2016 to December 31, 2016. Attached to this letter are the following tables:

- Table 1 - Listing of Compliance Status for Applicable Permit Terms and Conditions
- Table 2 - Deviation Summary Report
- Table 3 - Listing of Compliance Status for Applicable Compliance Monitoring Conditions - Construction Permits

If you have any questions or require further information, please contact me at 309-364-9411.

Sincerely,

Kellie Staab
Sr. Environmental Specialist

Attachments

Emerald Performance Materials®
Polymer Additives

CERTIFICATION

I certify under penalty of law that this document and all attachments were prepared under my direction or supervision in accordance with a system designed to assure that qualified personnel properly gathered and evaluated the information submitted. Based on my inquiry of the person or persons directly responsible for gathering the information, the information submitted is, to the best of my knowledge and belief, true, accurate, and complete. I am aware that there are significant penalties for submitting false information, including the possibility of fine and imprisonment for knowing violations.

William P. Stone
Responsible Official

2/27/17
Date

Plant Manager
Position

Table 1 Listing of Compliance Status for Applicable Compliance Monitoring Conditions - CAAPP Permit

Source Name	Emerald Polymer Additives, LLC	Source ID No.	96030152	Period Covered 7/1/2016 - 12/31/2016
(1) Permit Condition Reference Number	(2) Permit Condition	(3) Compliance Status Continuous "C" Intermittent "I" Noncompliance "N"	(4) Compliance Determination Method	
7.1.8(a)	The flare shall be equipped with a thermocouple to measure a combustion flame in the flare.	C	Thermocouple is in place to detect presence of flame.	
7.1.8(b)	The flare shall also be equipped with a camera to observe the presence of a flame. In the event of a flameout an audible alarm shall sound in the control room.	C	Camera is in place to detect presence of flame.	
7.1.8(c)	The scrubber shall have a meter for measuring flow of scrubbant.	C	Flow meter is in place.	
7.1.9	In addition to the records required by Condition 5.6, the Permittee shall maintain records of the following items for each affected MBT-C or NaMBT processes to demonstrate compliance with Conditions 5.5.1 and 7.1.8, pursuant to Section 39.5(7)(b) of the Act:	N/A - See Below	See Conditions 7.1.9(a) - 7.1.9(e) below.	
7.1.9(a)	The thermocouple need only record the presence of a flame, not an exact temperature.	I	Compliance is demonstrated by recording detection of flame by thermocouple in Title V Compliance Pages of the Microsoft Access 'Production' database. Operators did not record that the thermocouples at the flare were detecting a flame on the following shifts: 1 shift in November (14 Night) and 1 shift in December (6 Night). There is also no evidence that there were issues with the thermocouple on those shifts that should have been recorded.	
7.1.9(b)	Any time the camera detects no flame, a log entry shall be made explaining the circumstances.	I	Compliance is demonstrated by recording detection of flame by camera in Title V Compliance Pages of the Microsoft Access 'Production' database. Operators did not complete logs on the following shifts: 1 shift in November (14 Night) and 1 shift in December (6 Night). There is also no evidence that there were issues with the thermocouple on those shifts that should have been recorded.	
7.1.9(c)	Raw material usages and stoichiometric balance showing emissions of VOM, CS2, H2S and sulfur to the flare (lb/mo).	C	Compliance is demonstrated through monthly process efficiency spreadsheet for this manufacturing process.	
7.1.9(d)	Emissions of VOM, SO2 and H2S after flare combustion reflecting 99% destruction by the flare (lb/mo).	C	Construction Permit No. 05010033 (Issued 3/16/2007 – NaSH Process) limits flaring to 130 hours per year. The NaSH system now recovers a majority of H2S and therefore only a limited amount of SO2 is generated.	
7.1.9(e)	Daily entry of scrubbant flow rate verifying operation of the unit when the NaMBT reactor is in operation.	C	Scrubbant flowrate is recorded in ASPEN,	

Table 1 Listing of Compliance Status for Applicable Compliance Monitoring Conditions - CAAPP Permit

Source Name	Emerald Polymer Additives, LLC	Source ID No.	96030152	Period Covered: 7/1/2016 - 12/31/2016
(1) Permit Condition Reference Number	(2) Permit Condition	(3) Compliance status Continuous "C" Intermittent "I" Noncompliance "N"	(4) Compliance Determination Method	
7.2.9	In addition to the records required by Condition 5.6, the Permittee shall maintain records of the following items for the affected NaMBT purification process to demonstrate compliance with Conditions 5.5.1 and 7.2.7, pursuant to Section 39.5(7)(b) of the Act:	N/A - See Below	See Conditions 7.2.9(a) - 7.2.9(b) below.	
7.2.9(a)(i)	Records for periodic inspection of the vent head condenser and vent scrubber including the date and individual performing the inspection and the nature of the inspection	C	Inspections are conducted during routine data gathering for monitoring requirements.	
7.2.9(a)(ii)	Records for prompt repair of defects, with identification and description of the defect, the effect on emissions, date identified and date of repair, and the nature of the repair.	C	Repair records are included in WebWorks database. Records include description of defect, date of identification, date of repair, and nature of repair. No defects were detected during the reporting period that would result in excess emissions.	
7.2.9(b)	Twelve month rolling average calculation of extracting solvent loss (lb/mo).	C	Compliance is demonstrated through monthly process efficiency spreadsheet for this manufacturing process.	
7.3.8(a)*	The dust collectors on the drying and packaging system shall be equipped with a device for measuring Pressure drop across the bags (filters).	C	Pressure drop monitoring device is in place to measure pressure drop across bags.	
7.3.8(b)	Each condenser, whether a process or control unit, shall be equipped with a device for measuring either outlet temperature on the product side or the temperature of the coolant.	C	Temperature monitoring devices are installed for this equipment.	
7.3.8(c)	The scrubber shall be equipped with a device for measuring the scrubbant flow rate through the scrubber.	C	A flow meter was installed on the OBTS scrubber.	
7.3.9	Recordkeeping Requirement: In addition to records required by Condition 5.6, the following items demonstrate compliance with Conditions 5.5.1 and 7.7.3(c), pursuant to Section 39.5(7) (b) of the Act:	N/A - See Below		
7.3.9(a)	Pressure drop across the dust collectors (once/day) when operating	I	The pressure drop across the dust collectors used for MBDS was recorded in an electronic database at least once per day when the process was operating. Due to data recording errors, for one day in July, (25) the pressure drop across all dust collectors was not recorded.	

Table 1 Listing of Compliance Status for Applicable Compliance Monitoring Conditions - CAAPP Permit

Source Name	Emerald Polymer Additives, LLC	Source ID No.	96030152	Period Covered: 7/1/2016 - 12/31/2016
(1) Permit Condition Reference Number	(2) Permit Condition	(3) Compliance Status Continuous "C" Intermittent "I" Noncompliance "N"	(4) Compliance Determination Method	
7.3.9(b)	Exit temperature of process & control condensers or temperature of coolant (once/day)	I	Compliance is demonstrated by recording temperature in Title V Compliance Pages of the Microsoft Access 'Production' database at least once per day when operating. Due to data recording errors, for one day in July, (25) and one day in September (25) the temperature of the coolant was not recorded. .	
7.3.9(c)	Scrubbant flow rate (once/day)	I	Microsoft Access 'Production' database. Due to data recording errors, for one day in September (25) the scrubbant flowrate was not recorded. .	
7.3.9(d)	Sufficient data to be able to calculate loss of VOM by material balance (once/month, twelve month rolling average).	C	Compliance is demonstrated through monthly process efficiency spreadsheet for this manufacturing process.	
7.3.9.(e)	Process weight rate for PM emitting processes so that an allowable emission rate can be determined per Condition 7.3.3(c)	C	Application forms from Title V Permit Application established permissible emission rates based on PWR calculations. Monthly process efficiency spreadsheet for this manufacturing process demonstrate compliance with PWR-based limits.	
7.3.9(f)(i)	Periodic inspection of the condenser, baghouse, dust collector and wet scrubber including the date & individual performing the inspection and the nature of the inspection.	C	Inspections are conducted during routine data gathering for monitoring requirements.	
7.3.9(f)(ii)	Records for prompt repair of defects, with identification & description of the defect, the effect on emissions, date identified and date of repair, and the nature of the repair.	C	Repair records are included in WebWorks database. Records include description of defect, date of identification, date of repair, and nature of repair. No defects were detected during the reporting period that would result in excess emissions.	
7.3.9(g)	VOM & PM emissions (lb/month and twelve monthly rolling average	C	Compliance is demonstrated through monthly process efficiency spreadsheet for this manufacturing process.	
7.4.8(a)*	The dust collectors on the drying system and the bagging system shall be equipped with a device for measuring pressure drop across the bags (filters).	C	Pressure drop monitoring device is in place to measure pressure drop across bags.	
7.4.8(b)*	Each condenser, whether a process or control unit, shall be equipped with a device for measuring either outlet temperature on the product side or the temperature of the coolant. For units that use the same coolant, one monitor shall be considered sufficient.	C	Temperature monitoring devices are installed for this equipment.	
7.4.8(c)	Each scrubber/adsorber shall be equipped with a flow meter for measuring the scrubbant flow rate.	C	Flow meter is in place	

Table 1 Listing of Compliance Status for Applicable Compliance Monitoring Conditions - CAAPP Permit

Source Name	Emerald Polymer Additives, LLC	Source ID No.	96030152	Period Covered: 7/1/2016 - 12/31/2016
(1) Permit Condition Reference Number	(2) Permit Condition	(3) Compliance Status Continuous "C" Intermittent "I" Noncompliance "N"	(4) Compliance Determination Method	
7.4.9	In addition to the records required by Condition 5.6, the Permittee shall maintain records of the following items for each affected C-18 or BBTS process to demonstrate compliance with Conditions 5.5.1 and 7.4.3(c), pursuant to Section 39.5(7)(b) of the Act:	N/A - See Below	See Conditions 7.4.9(a) - 7.4.9(i) below.	
7.4.9(a)	Condenser outlet or coolant temperature (once/day).	C	Compliance is demonstrated by recording temperature in Title V Compliance Pages of the Microsoft Access 'Production' database.	
7.4.9(b)	Scrubbant flow rate (once/day).	C	Compliance is demonstrated by recording flow rate in Title V Compliance Pages of the Microsoft Access 'Production' database.	
7.4.9(c)	Pressure drop across the dust collectors (once/day) when operating.	C	Compliance is demonstrated by recording pressure drop reading in the Tite V Compliance Pages of the Microsoft Access "Production" database.	
7.4.9(d)	Batches processed per year.	C	Compliance is demonstrated through monthly process efficiency spreadsheet for this manufacturing process.	
7.4.9(e)	Raw material usages including HAP reaction medium (lb/mo, twelve month rolling average).	C	Compliance is demonstrated through monthly process efficiency spreadsheet for this manufacturing process.	
7.4.9(f)	Sufficient data to determine percent recovery of HAPs and net loss by material balance (lb/mo, twelve month rolling average).	C	Compliance is demonstrated through monthly process efficiency spreadsheet for this manufacturing process.	
7.4.9(g)	Process weight rate for PM emitting processes so that an allowable can be determined per Condition 7.4.3(c).	C	Application forms from Title V Permit Application established permissible emission rates based on PWR calculations. Monthly process efficiency spreadsheet for this manufacturing process demonstrate compliance with PWR-based limits.	
7.4.9(h)(i)	Records for periodic inspection of the recovery system, vent condenser, baghouse, dust collector, sump cover and scrubber including the date and individual performing the inspection and the nature of the inspection.	C	Inspections are conducted during routine data gathering for monitoring requirements.	
7.4.9(h)(ii)	Records for prompt repair of defects, with identification and description of the defect, the effect on emissions, date identified and date of repair, and the nature of the repair.	C	Repair records are included in WebWorks database. Records include description of defect, date of identification, date of repair, and nature of repair. No defects were detected during the reporting period that would result in excess emissions.	
7.4.9(i)	VOM, HAP and PM Emissions (lb/mo, twelve monthly rolling average).	C	Compliance is demonstrated through monthly process efficiency spreadsheet for this manufacturing process.	
7.5.8(a)	The wet scrubber shall be equipped with a device for measuring scrubbant flow through the scrubber.	C	This manufacturing processes last operated in 2004 and is not expected to operate in the foreseeable future. Equipment required to produce these products has been dismantled. No monitoring was required during the reporting period since equipment was not operated.	

Table 1 Listing of Compliance Status for Applicable Compliance Monitoring Conditions - CAAPP Permit

Source Name	Emerald Polymer Additives, LLC	Source ID No.	96030152	Period Covered: 7/1/2016 - 12/31/2016
(1) Permit Condition Reference Number	(2) Permit Condition	(3) Compliance status Continuous "C" Intermittent "I" Noncompliance "N"	(4) Compliance Determination Method	
7.5.8(b)	The condenser shall be equipped with a device for measuring either outlet temperature of the secondary condenser or for measuring the condenser coolant inlet temperature. Condensers that have a common coolant may have one measuring point.	C	This manufacturing processes last operated in 2004 and is not expected to operate in the foreseeable future. Equipment required to produce these products hasbeen dismantled. No monitoring was required during the reporting period since equipment was not operated.	
7.5.9	In addition to the records required by Condition 5.6, the Permittee shall maintain records of the following items for each affected antioxidant 3 process to demonstrate compliance with Conditions 5.5.1 and 7.5.8, pursuant to Section 39.5(7)(b) of the Act:	C	This manufacturing processes last operated in 2004 and is not expected to operate in the foreseeable future. Equipment required to produce these products has been dismantled. No monitoring was required during the reporting period since equipment was not operated.	
7.5.9(a)	Condenser outlet or coolant temperature (°F, daily)	C	This manufacturing processes last operated in 2004 and is not expected to operate in the foreseeable future. Equipment required to produce these products has been dismantled. No monitoring was required during the reporting period since equipment was not operated.	
7.5.9(b)	Scrubber flow rate (gal/min, once each batch)	C	This manufacturing processes last operated in 2004 and is not expected to operate in the foreseeable future. Equipment required to produce these products has been dismantled. No monitoring was required during the reporting period since equipment was not operated.	
7.5.9(c) (i)	Records for periodic inspection of the condenser and scrubbers including the date and individual performing the inspection and the nature of the inspection.	C	This manufacturing processes last operated in 2004 and is not expected to operate in the foreseeable future. Equipment required to produce these products has been dismantled. No monitoring was required during the reporting period since equipment was not operated.	
7.5.9(c) (ii)	Records for prompt repair of defects, with identification and description of the defect, the effect on emissions, date identified and date of repair, and the nature of the repair.	C	This manufacturing processes last operated in 2004 and is not expected to operate in the foreseeable future. Equipment required to produce these products has not been dismantled. No monitoring was required during the reporting period since equipment was not operated.	
7.5.9(d)	Production (lb/mo)	C	This manufacturing processes last operated in 2004 and is not expected to operate in the foreseeable future. Equipment required to produce these products has been dismantled. No monitoring was required during the reporting period since equipment was not operated.	
7.5.9(e)	VOM and HCl emissions (lb/mo, twelve month rolling average).	C	This manufacturing processes last operated in 2004 and is not expected to operate in the foreseeable future. Equipment required to produce these products has been dismantled. No monitoring was required during the reporting period since equipment was not operated.	
7.6.8(a)	The dust collector shall be equipped with a device for measuring pressure drop across the bags.	C	Pressure drop monitoring device is in place to measure pressure drop across bags.	

Table 1 Listing of Compliance Status for Applicable Compliance Monitoring Conditions - CAAPP Permit

Source Name	Emerald Polymer Additives, LLC	Source ID No	96030152	Period Covered: 7/1/2016 - 12/31/2016
(1) Permit Condition Reference Number	(2) Permit Condition	(3) Compliance Status Continuous "C" Intermittent "I" Noncompliance "N"	(4) Compliance Determination Method	
7.6.8(b)*	Each process condenser shall be equipped with a device for measuring either outlet temperature on the product side or the temperature of the coolant. For units that use the same coolant, one monitor shall be considered sufficient.	C	Temperature monitoring devices are installed for this equipment.	
7.6.9	In addition to the records required by Condition 5.6, the Permittee shall maintain records of the following items for each affected Stalite process unit to demonstrate compliance with Conditions 5.5.1 and 7.6.8, pursuant to Section 39.5(7)(b) of the Act:	N/A - See Below	See Conditions 7.6.9(a) - 7.6.9(f) below.	
7.6.9(a)	Condenser outlet or coolant temperature (once/day)	I	Compliance is demonstrated by recording temperature in Title V Compliance Pages of the Microsoft Access 'Production' database. The coolant temperartures were recorded at least once per day when either process was operating. Due to reporting error, temperatures were not recorded for one day in October (5).	
7.6.9(b)	Pressure drop across the dust collectors (once/day)	C	Compliance is demonstrated by recording pressure drop in Title V Compliance Pages of the Microsoft Access 'Production' database. The pressure drop across the dust collectors was recorded at least once per day when either process was operating.	
7.6.9(c) (i)	Records for period inspection of the dust collector, condenser and scrubber including the date and individual performing the inspection and the nature of the inspection.	C	Inspections are conducted during routine data gathering for monitoring requirements.	
7.6.9(c) (ii)	Records for prompt repair of defects, with identification and description of the defect, the effect on emissions, date identified and date of repair, and the nature of the repair.	C	Repair records are included in WebWorks database. Records include description of defect, date of identification, date of repair, and nature of repair. No defects were detected during the reporting period that would result in excess emissions.	
7.6.9(d)	Raw material usages (lb/mo)	C	Compliance is demonstrated through monthly process efficiency spreadsheet for this manufacturing process.	
7.6.9(e)	Process weight rate for the solidification/packaging process so that an allowable can be determined per Condition 7.4.3(c)	C	Application forms from Title V Permit Application established permissible emission rates based on PWR calculations. Monthly process efficiency spreadsheet for this manufacturing process demonstrate compliance with PWR-based limits.	
7.6.9(f)	VOM, HAP and PM emissions (lb/mo, twelve monthly rolling average). The VOM records shall also be sufficient to determine if emissions are either under 8 lb/hr or if the condenser(s) are considered to be control equipment that they reduce VOM emissions by 85%	C	Compliance is demonstrated through monthly process efficiency spreadsheet for this manufacturing process.	

Table 1 Listing of Compliance Status for Applicable Compliance Monitoring Conditions - CAAPP Permit

Source Name	Emerald Polymer Additives, LLC	Source ID No.	96030152	Period Covered: 7/1/2016 - 12/31/2016
(1) Permit Condition Reference Number	(2) Permit Condition	(3) Compliance status Continuous "C" Intermittent "I" Noncompliance "N"	(4) Compliance Determination Method	
7.7.8(a)	The vent scrubber shall be equipped with a device for measuring scrubbant flow rate through the scrubber.	C	Flow meter is in place	
7.7.8(b)	Each condenser, whether a control device or for material recovery, shall be equipped with a device for measuring either outlet temperature on the condenser or for measuring the condenser coolant inlet temperature. Condensers that use a common coolant may have one measuring point.	C	Temperature monitoring devices are installed for this equipment.	
7.7.8(c)	The dust collector shall be equipped with a device for measuring pressure drop across the bags.	C	Pressure drop monitoring device is in place to measure pressure drop across bags.	
7.7.9	In addition to the records required by Condition 5.6, the Permittee shall maintain records of the following items for the affected Building 722 antioxidant process to demonstrate compliance with Conditions 5.5.1 and 7.7.3, pursuant to Section 39.5(7)(b) of the Act:	N/A - See Below	See Conditions 7.7.9(a) - 7.7.9(g) below.	
7.7.9(a)	Condenser outlet or coolant temperature (°F, daily)	C	Compliance is demonstrated by recording temperature in Title V Compliance Pages of the Microsoft Access 'Production' database. The coolant temperature for each condenser was recorded at least once a day the process was operating.	
7.7.9(b)	Scrubber flow rate (gal/min, once each batch)	C	Scrubbant flowrate is recorded in ASPEN,	
7.7.9(c)	Pressure drop across the dust collector bags (once/day)	C	Compliance is demonstrated by recording pressure drop in Title V Compliance Pages of the Microsoft Access 'Production' database.The pressure drop across the dust collector bags was recorded at least once per day when the process was operating,	
7.7.9(d) (i)	Records for period inspection of the vent condensers, dust collector, sump cover, and vent scrubber including the date and individual performing the inspection and the nature of the inspection.	C	Inspections are conducted during routine data gathering for monitoring requirements.	
7.7.9(d) (ii)	Records for prompt repair of defects, with identification and description of the defect, the effect on emissions, date identified and date of repair, and the nature of the repair.	C	Repair records are included in WebWorks database. Records include description of defect, date of identification, date of repair, and nature of repair. No defects were detected during the reporting period that would result in excess emissions.	
7.7.9(e)	Number of batches of each product.	C	Compliance is demonstrated through monthly process efficiency spreadsheet for this manufacturing process.	

Table 1 Listing of Compliance Status for Applicable Compliance Monitoring Conditions - CAAPP Permit

Source Name	Emerald Polymer Additives, LLC	Source ID No.	96030152	Period Covered: 7/1/2016 - 12/31/2016
(1) Permit Condition Reference Number	(2) Permit Condition	(3) Compliance Status Continuous "C" Intermittent "I" Noncompliance "N"	(4) Compliance Determination Method	
7.7.9(f)	Production (lb/mo)	C	Compliance is demonstrated through monthly process efficiency spreadsheet for this manufacturing process.	
7.7.9(g)	VOM and HAP emissions (lb/mo, twelve month rolling average).	C	Compliance is demonstrated through monthly process efficiency spreadsheet for this manufacturing process.	
7.8.9	In addition to the records required by Condition 5.6, the Permittee shall maintain records of the following items for the affected WWTP to demonstrate compliance with Condition 5.5.1, pursuant to Section 39.5(7)(b) of the Act: A monthly mass balance (12 month rolling average) of VOMs to the waste treatment system of primary organic materials.	C	Compliance is demonstrated through monthly process efficiency spreadsheet for this process.	
7.9.9	In addition to the records required by Condition 5.6, the Permittee shall maintain records of the following items for each affected storage tank to demonstrate compliance with Condition 7.9.3(c), pursuant to Section 39.5(7)(b) of the Act:	N/A - See Below	See Conditions 7.9.9(a) - 7.9.9(c) below.	
7.9.9(a)	Design information for any tank holding a material with a vapor pressure over 2.5 psia showing the presence of a permanent submerged loading pipe.	C	Tank 31 (Phospohorus Trichloride) was removed from service and the Title V Renewal Application requested the removal of the tank from the Title V Permit. The renewal application also requested to change the designation for the Acetonitrile Tank from Tank 15 to Tank 37. Design information for all storage tanks was included in the original Title V Permit Application. All tanks storing material with vapor pressure > 2.5 psia are equipped with a submerged loading pipe.	
7.9.9(b)	Tank throughput (gal/yr).	C	Tank throughputs are reported annually.	
7.9.9(c)	VOM emissions for each tank (lb/yr).	C	VOM emissions from storage tanks are calculated annually and included in the Annual Emissions Report.	
8.6.1	January - June Monitoring Period - Report Due Date September 1 July - December Monitoring Period - Report Due Date March 1	C	Monitoring Reports are submitted as required. This report serves as the Semi-Annual Monitoring Report for the reporting period of July 1, 2016 - December 31, 2016.	

Table 2: Deviation Summary Report

Source Name	Emerald Polymer Additives, LLC	Source ID No.	96030152			Period Covered: 7/1/2016 - 12/31/2016
(1) Permit Condition Reference	(2) Description of Permit Condition	(3) Deviation Period Start Date	(4) Deviation Period End Date	(5) Description and Cause of Deviation	(6) Corrective Action (s) Taken to Remedy Deviation	(7) Measure(s) Taken to Prevent Future Deviations
7.1.9(a)	The thermocouple need only record the presence of a flame, not an exact temperature.	11/14/16 6:00 PM	11/15/16 6:00 AM	A log was not completed during this shift due to operator error.	The data base is now being checked on a weekly basis by Sr. EHS Specialist to ensure compliance and to inform management of any deviations to have them corrected in a more timely fashion.	Training is conducted annually. The number of deviations is being tracked as a Key Performance Indicator (KPI) for the plant.
7.1.9(a)	The thermocouple need only record the presence of a flame, not an exact temperature.	12/6/16 6:00 PM	12/7/16 6:00 AM	A log was not completed during this shift due to operator error.	The data base is now being checked on a weekly basis by Sr. EHS Specialist to ensure compliance and to inform management of any deviations to have them corrected in a more timely fashion.	Training is conducted annually. The number of deviations is being tracked as a Key Performance Indicator (KPI) for the plant.
7.1.9(b)	Anytime the camera detects no flame, a log entry shall be made explaining the circumstances	11/14/16 6:00 PM	11/15/16 6:00 AM	A log was not completed during this shift due to operator error.	The data base is now being checked on a weekly basis by Sr. EHS Specialist to ensure compliance and to inform management of any deviations to have them corrected in a more timely fashion.	Training is conducted annually. The number of deviations is being tracked as a Key Performance Indicator (KPI) for the plant.
7.1.9(b)	Anytime the camera detects no flame, a log entry shall be made explaining the circumstances	12/6/16 6:00 PM	12/7/16 6:00 AM	A log was not completed during this shift due to operator error.	The data base is now being checked on a weekly basis by Sr. EHS Specialist to ensure compliance and to inform management of any deviations to have them corrected in a more timely fashion.	Training is conducted annually. The number of deviations is being tracked as a Key Performance Indicator (KPI) for the plant.
7.3.9(a)	Pressure drop across the dust collectors (once/day) when operating	7/25/16 6:00 AM	7/26/16 6:00 AM	A log was not completed during this day due to operator error.	The data base is now being checked on a weekly basis by Sr. EHS Specialist to ensure compliance and to inform management of any deviations to have them corrected in a more timely fashion.	Training is conducted annually. The number of deviations is being tracked as a Key Performance Indicator (KPI) for the plant.
7.3.9(b)	Exit Temperature of process & control condensers or temperature of coolant (once/day)	7/25/16 6:00 AM	7/25/16 6:00 AM	A log was not completed during this shift due to operator error.	The data base is now being checked on a weekly basis by Sr. EHS Specialist to ensure compliance and to inform management of any deviations to have them corrected in a more timely fashion.	Training is conducted annually. The number of deviations is being tracked as a Key Performance Indicator (KPI) for the plant.
7.3.9(b)	Exit Temperature of process & control condensers or temperature of coolant (once/day)	9/25/16 6:00 AM	9/26/16 6:00 AM	A log was not completed during this shift due to operator error.	The data base is now being checked on a weekly basis by Sr. EHS Specialist to ensure compliance and to inform management of any deviations to have them corrected in a more timely fashion.	Training is conducted annually. The number of deviations is being tracked as a Key Performance Indicator (KPI) for the plant.
7.3.9(c)	Scrubbant Flow Rate (once/day)	9/25/16 6:00 AM	9/26/16 6:00 AM	A log was not completed during this shift due to operator error.	The data base is now being checked on a weekly basis by Sr. EHS Specialist to ensure compliance and to inform management of any deviations to have them corrected in a more timely fashion.	Training is conducted annually. The number of deviations is being tracked as a Key Performance Indicator (KPI) for the plant.

Table 2: Deviation Summary Report

Source Name	Emerald Polymer Additives, LLC	Source ID No.	96030152			Period Covered: 7/1/2016 - 12/31/2016
(1) Permit Condition Reference	(2) Description of Permit Condition	(3) Deviation Period Start Date	(4) Deviation Period End Date	(5) Description and Cause of Deviation	(6) Corrective Action (s) Taken to Remedy Deviation	(7) Measure(s) Taken to Prevent Future Deviations
7.6.9(a)	Condenser outlet or coolant temperature (once/'day)	10/5/16 6:00 AM	10/6/16 6:00 AM	A log was not completed during this day due to operator error.	The data base is now being checked on a weekly basis by Sr. EHS Specialist to ensure compliance and to inform management of any deviations to have them corrected in a more timely fashion.	Training is conducted annually. The number of deviations is being tracked as a Key Performance Indicator (KPI) for the plant.

Table 3 Listing of Compliance Status for Applicable Compliance Monitoring Conditions_Construction Permits

Source Name	Emerald Polymer Additives, LLC	Construction Permit Application Number	06010089 (Issued 2/9/2006 – Changes to Recovery System for C18 Process)
(1) Permit Condition Reference Number	(2) Permit Condition	(3) Compliance status Continuous "C" Intermittent "I" Noncompliance "N"	(4) Compliance Determination Method
5	The permittee shall maintain the following records for Scrubber CU725-8006:	N/A - See Below	See Conditions 5(a) - 5(c) below.
5(a)	A file with design information and engineering calculations for the performance of the scrubber.	C	Permit application contains design information for the scrubber.
5(b)	An operating log or other records, that includes detailed information for any malfunction or breakdown.	C	Compliance is demonstrated by recording malfunctions or breakdowns in Title V Compliance Pages of the Microsoft Access 'Production' database.
5(c)	Logs of inspection, maintenance, and repairs.	C	Repair records are included in WebWorks database. Records include description of defect, date of identification, date of repair, and nature of repair. No defects were detected during the reporting period that would result in excess emissions.

Source Name	Emerald Polymer Additives, LLC	Construction Permit Application Number	06100059 (Issued 1/25/2007 – Enhancements to Toluene Recovery and Batch Still)
(1) Permit Condition Reference Number	(2) Permit Condition	(3) Compliance status Continuous "C" Intermittent "I" Noncompliance "N"	(4) Compliance Determination Method

The Construction Permit does not contain any monitoring requirements other than those required by MON. Please see MON Periodic Report for the Reporting Period.

Source Name	Emerald Polymer Additives, LLC	Construction Permit Application Number	05010033 (Issued 3/16/2007 – NaSH Process)
(1) Permit Condition Reference Number	(2) Permit Condition	(3) Compliance status Continuous "C" Intermittent "I" Noncompliance "N"	(4) Compliance Determination Method
1.1.8-1(a)	The Permittee shall monitor one of the following parameters for the CS2 column: i. Coolant temperature leaving the column (°F); ii. CS2 temperature leaving the column (°F); or iii. Applicable operating parameter(s) specified by 40 CFR 63, Subpart FFFF.	C	Permittee elects to monitor temperature of condensate receiver, pursuant to the NOCSR filed for compliance with the MON.
1.1.8-1(b)	The Permittee shall monitor each scrubber (NaSH column and final scrubber) in the NaSH process for the following parameters: i. Scrubbant flow rate (gallons/minute); ii. Pressure drop (inches of water); and iii. Scrubbant temperature entering the scrubber (°F).	C	All parameters are monitored as required in ASPEN.
1.1.8-2(a)(i)	The Permittee shall install, operate and maintain instrumentation on the NaSH Process to measure the ability of the scrubbant to react with the H2S, such as pH.	C	Specific Gravity/Density of scrubbant is tracked in ASPEN.
1.1.8-2(a)(ii)	The Permittee shall record this data at an appropriate frequency to ensure that the scrubbant in the final scrubber is appropriately replaced so that effectiveness of scrubbing is maintained.	C	Specific Gravity/Density of scrubbant is tracked in ASPEN.
1.1.9(a)	The Permittee shall have an operating log for affected reactor systems and associated NaSH Process including periodic information confirming normal operation; data for each replacement of scrubbant in the final scrubber; the time, date, and duration of any periods of operation of the backup flare with explanation; and information for periods when the affected reactor system does not operate normally.	C	Compliance is demonstrated by recording information in Title V Compliance Pages of the Microsoft Access 'Production' database.
1.1.9(b)	i. The Permittee shall determine the approximate amount of NaSH product generated by each unit of production produced or some other easily measured input value to the affected reactor systems. ii. On a monthly basis, the Permittee shall keep records of the amount of NaSH generated per unit of production from an affected reactor system.	C	NaSH production is tracked on a monthly basis.

Source Name: Emerald Polymer Additives, LLC		Construction Permit Application Number:	05010033 (Issued 3/16/2007 – NaSH Process) (continued)
(1) Permit Condition Reference Number	(2) Permit Condition	(3) Compliance status Continuous "C" Intermittent "I" Noncompliance "N"	(4) Compliance Determination Method
1.1.9(c)	The Permittee shall maintain manual records of the operating parameters for the NaSH process, at least once every hour, if automatic recording device(s) are not in service for more than two hours.	C	The NaSH process is shut down in the event that automatic recording devices malfunction.
1.1.9(d)	The Permittee shall keep a log for inspection, maintenance, and repair activities for the NaSH process and the backup flare, that include at a minimum: i. Date of inspection, maintenance, and repair activities; ii. Description of maintenance or repair activity if not routine preventative maintenance; and iii. Probable cause for requiring maintenance or repair if not routine or preventative.	C	Repair records are included in WebWorks database. Records include description of defect, date of identification, date of repair, and nature of repair. No defects were detected during the reporting period that would result in excess emissions.
1.1.9(e)	The Permittee shall maintain records for any period during which any of the control devices were not in operation or were not operating properly when the affected reactor system was in operation:	C	Compliance is demonstrated by recording malfunctions or breakdowns in Title V Compliance Pages of the Microsoft Access 'Production' database.
1.1.9(f)	The Permittee shall maintain the following records related to actual emissions: i. Number of hours operated with the flare and with the NaSH process identified above on a monthly basis, with explanation; ii. Monthly emissions of VOM, CS2 , H2S and SO2 determined as the summation of the product of the above records; and iii. Annual emissions of VOM, CS2 , H2S and SO2	C	Compliance is demonstrated through monthly process efficiency spreadsheet for this manufacturing process.

Period Covered: 12/1/2016-12/31/2016

Source Name: Emerald Polymer Additives, LLC		Construction Permit Application Number:	08030030 (Issued 5/7/2008 – Improvements to Scrubber CU711-0004)
(1) Permit Condition Reference Number	(2) Permit Condition	(3) Compliance status Continuous "C" Intermittent "I" Noncompliance "N"	(4) Compliance Determination Method

The Construction Permit does not contain any monitoring requirements other than those required by MON. Please see MON Periodic Report for the Reporting Period.

Period Covered: 12/1/2016-12/31/2016

Source Name: Emerald Polymer Additives, LLC		Construction Permit Application Number:	16050001 (Issued 6/6/2016 – Antioxidant 9 Project
(1) Permit Condition Reference Number	(2) Permit Condition	(3) Compliance status Continuous "C" Intermittent "I" Noncompliance "N"	(4) Compliance Determination Method
5.a.i.	The operation of the affected process shall not exceed 40 batches per month and 420 batches per year;		**Still under construction as of 12/31/2016**
5.a.ii.	Compliance with this annual limit and other annual limits set by this permit shall be determined on a 12 month rolling basis.		
5.b.	The production of byproduct alcohol by the affected process shall not exceed 84 tons per month and 1%¯..08 tons per year.		
6.a	Emissions of volatile organic material (VOM) from the affected process shall not exceed 100 pounds per batch and 21.0 tons/year.		
6.b.	b. This permit is issued based on minimal emissions of PM and PM, from the affected dry material systems, i.e., total emissions of PM and PM" each no more than 1.1 tons/year.		
7.a.	Upon written request by the Illinois EPA, the Permittee shall expeditiously have performance testing conducted for the vent condensers of the affected process, as specified in the request, to determine VOM emissions and the VOM control efficiency.		

8.a.	For the alcohol recovery condenser and vent condensers in the affected process, the Permittee shall install, operate and maintain instrumentation to measure either outlet gas temperature of the condenser or the condenser coolant inlet temperature. If coolant temperature is measuring, condensers that have a common coolant supply may have one measuring point.		
8.b.i.	The Permittee shall record the data measured by this instrumentation on an hourly average basis if the data is automatically recorded or otherwise at least once each day that the affected process is operated, with data for the period when the vent condenser is used.		
8.b.ii.	The Permittee shall keep a maintenance log or other records for this instrumentation detailing all routine and non-routine maintenance performed, including dates and duration.		
9.a.	The Permittee shall maintain the fiollowng records for operation of the affected process:		
9.a.i.	Number of batches produced (batches/month and batches/year, 12 month rolling total);		
9.a.ii.	Amount of byproduct alcohol produced (tons/month and tons/year, 12 month rolling total).		
9.b	The Permittee shall maintain records addressing use of good operating practices for the alcohol recovery condenser and the emissions control devices for the affected process:		
9.b.i.	Records for periodic inspection of the control device with date, individual performing the inspection, and nature of inspection.		
9.b.ii.	A maintenance log for the control device detailing all routine and non-routine maintenance performed including dates and duration of any outages;		
9.b.iii.	Records for prompt repair of defects, with identification and description of the defect, the effect on emissions, date identified and date of repair, and the nature of the repair		
9.c.	The Permittee shall maintain the following records related to the emissions of the affected process:		
9.c.i.	A file containing the following, with detailed supporting documentation and engineering calculations:		
9.c.i.A.	A demonstration that the emissions of organic material from the affected process comply with 35 IAC 215 Subpart K, which demonstration shows that in each hour during a batch, the emissions of organic material either: 1) Do not qualify as photochemically reactive material as defined by 35 IAC 211.4690; 2) Do not exceed 8.0 pounds; or 3) Are controlled with control device(s) (i.e., condensers CU712-9006*, CU712-9008, CU712-9012 and/or CU712- 9014) with at least 85 percent overall control for organic material. * When used for the purpose of controlling organic material emissions prior to the alcohol recovery step, this condenser may also be considered a control device.		
9.c.i.B.	A determination of the maximum VOM emissions per batch when established control measures are properly operated at normal levels of operating parameters (pounds/batch).		
9.c.i.B.i.	Records for any period when control measures for the affected process did not operate properly so as to potentially increase VOM emissions from the affected process, with description and an estimate of the additional emissions of VOM that resulted (pounds).		
9.c.i.B.ii.	Records of the aggregate VOM emissions from the affected process (tons/month and tons/year, 12 month rolling total), with supporting calculations.		
9.d.	d. All records and logs required by this permit shall be retained at a readily accessible location at the source for at least five years from the date of entry and shall be made available for inspection and copying by the Illinois EPA or USEPA upon request. Any records retained in an electronic format (e.g., computer) shall be capable of being retrieved and printed on paper during normal source office hours so as to be able to respond to an Illinois EPA or USEPA request for records during the course of a source inspection.		

VEOLIA

RECEIVED
MAR 09 2017
AIR ENFORCEMENT BRANCH
U.S. EPA REGION 5

March 2, 2017

EPA Region V
Mr. Edward Nam, Director
Air and Radiation Division
77 W. Jackson
Chicago, IL 60604

Re: Veolia ES Technical Solutions, L.L.C.
7 Mobile Avenue
Sauget, IL 62201
V-IL-1716300103-08-01
Benzene NESHAP Reporting – TAB & Inspection Summary
January 1 – December 31, 2016

Dear Mr. Nam:

Veolia ES Technical Solutions, L.L.C. handles and operates emissions units regulated under 40 CFR 61 Subpart FF, Benzene Waste Operations NESHAP. These emissions units include containers, tanks, closed vent systems and control devices in addition to the incineration treatment process. As required by 40 CFR 61.357 reporting requirements, enclosed are the 2016 Total Annual Benzene and Annual Inspection Summary Reports for Veolia ES Technical Solutions, L.L.C.

Based on Veolia's calculations, the Total Annual Benzene (TAB) received for 2016 was 21.40 Mg. Veolia has properly installed the necessary equipment to handle these wastes in accordance with the appropriate standards. Veolia certifies that all wastes received which are subject to the NESHAP have been and continue to be managed in controlled units and treated in compliance with 40 CFR 61.342, et al. The Total Annual Benzene report is attached.

Those inspections of containers, tanks, closed vent systems and control devices resulting in problems that could have resulted in emissions are summarized on the attached Annual Benzene Inspection Summary. Corrective actions have been identified for each occurrence. Containers, tank openings and closed vent systems are inspected at least quarterly for gaps, cracks and openings and monitored annually for leaks defined as emissions exceeding 500 ppmv above background. Pressure relief valves are monitored once every four days for

Veolia North America
Head office: 200 East Randolph, Suite 7900
Chicago, IL 60601
tel. +1 312 552 2800 - fax +1 312 552 2866

7 Mobile Ave
Sauget, Il 62201
tel. +1 618 271 2804 - fax +1 618 271 2128

www.veolianorthamerica.com

emissions exceeding 500 ppmv above background. Carbon canisters are monitored at 20 percent of their pre-determined life span and changed out immediately when breakthrough is detected at the level appropriate for the specific canister.

I certify under penalty of law that this document and all attachments were prepared under my direction or supervision in accordance with a system designed to assure that qualified personnel properly gather and evaluate the information submitted. Based on my inquiry of the person or persons who manage the system, or those persons directly responsible for gather the information, the information submitted is, to the best of my knowledge and belief, true, accurate, and complete. I am aware that there are significant penalties for submitting false information, including the possibility of fine and imprisonment for knowing violation.

Please call me or Nancy Paddock at (618) 271 - 2804, extensions 101 and 115 respectively, if you have any questions concerning this report.

Sincerely,
Veolia ES Technical Solutions, L.L.C.

Doug Harris

Doug Harris
General Manager

Veolia ES Technical Solutions, L.L.C.

2016 Benzene Waste Operations NESHAP TAB Report

Waste Stream Description	Process	Benzene Range	Concen-tration	UOM	Pounds Waste	Pounds Benzene	Benzene Mg
GC VIALS	ANALYTICAL SOLVENTS USED IN GC ANALYSES	1-5%	5	%	2,868	143.40	0.0650
HAZARDOUS SLUDGES	Phase separation of k011 distillation bottoms	0-0.5ppm	0.5	ppm	121,520	0.06	0.0000
TANK 19/COEN FEED IGNITABLE LIQUID WASTE	manufacturing of various alkyl amines	0-3.8ppm	3.8	ppm	814,554	3.10	0.0014
CRACKER RAG LAYER (LIQUID)	ORGANICS/WATER RAG LAYER FROM G&H CRACKER SETTLER WHICH SEPARATES ORGANICS FROM THE WATER; Non-Solidified	0-0.6%	6000	ppm	151,567	909.40	0.4125
SPENT CAUSTIC	TANK CLEANING	0-2ppm	2	ppm	920	0.00	0.0000
HYDROCARBON WASTE FROM UM REFINING	PETROLEUM REFINING OPERATIONS & PROCESS WASTE WATER SYSTEM	0-26ppm	26	ppm	71,960	1.87	0.0008
NON-FLAMMABLE AMINES	TSDF CONSOLIDATION	0-0.5%	0.5	%	8,537	42.69	0.0194
ORGANIC ACIDS	OUTDATED ORGANIC ACID AT TSD CONSOLIDATION	0-1%	10000	ppm	6,482	64.82	0.0294
SPENT CARBON WITH BENZENE	WASTEWATER TREATMENT	5-20%	20	%	380	76.00	0.0345
HYDROLYZED GANTREZ UNSPARGED	off-spec solution	0-2ppm	2	ppm	10,688	0.02	0.0000
LAB DEBRIS	lab waste	0.11ppm	0.11	ppm	7,264	0.00	0.0000
FLAMMABLE CORROSIVE ORGANIC ACID	TSD CONSOLIDIATION	0-1%	10000	ppm	34,745	347.45	0.1576
FLAM CORROSIVE BASIC HYDROXIDES/AMINES	SOLVENT AND PETROLEUM CONSOLIDATION	0-1%	1	%	12,540	125.40	0.0569
TOXIC LIQUIDS AND FLAMMABLE TOXICS	OUT DATED MATERIAL PESTICIDES INSECTICIDES/TSD CONSOLIDATI ON	0-30%	30	%	147,297	44,189.10	20.0438
VIALS CONTAINING ACID/WATER	TSD CONSOLIDATION OF LAB WATER SAMPLES	0-9.99	9.99	ppm	144	0.00	0.0000
(C-2015) EXTRACTOR WASTE	lab testing	0-15%	15	%	400	60.00	0.0272
PROCESS WATER SLUDGE	Petroleum Refining	0-100ppm	100	ppm	72,397	7.24	0.0033
BUNDLE CLEANING SLUDGE	Heat exchanger solids from petroleum refining	0-10ppm	10	ppm	813	0.01	0.0000
BENZENE SLUDGE AND DEBRIS (D003)	Petroleum refining	0-1%	10000	ppm	4,506	45.06	0.0204
SELF-HEATING SCALE/SLUDGE	Sulfide containing waste from petroleum refining	0-1ppm	1	ppm	205	0.00	0.0000
BUNDLE SLUDGE DEBRIS	PPE from bundle cleaning	0-10ppm	10	ppm	55	0.00	0.0000
BPA LAB SLOPS	off spec lab solvents	0-1%	1	%	440	4.40	0.0020
API SEWER SLUDGE & DEBRIS	HYDROBLASTING SEWER LINES AND EQUIP.	0-10ppm	10	ppm	93,460	0.93	0.0004

Veolia ES Technical Solutions, L.L.C.

2016 Benzene Waste Operations NESHAP TAB Report

Waste Stream Description	Process	Benzene Range	Concen-tration	UOM	Pounds Waste	Pounds Benzene	Benzene Mg
BENZENE CONTAMINATED SOIL/SOLIDS	SOLIDS/SOIL/WASTE FROM OIL/BENZENE SPILL CLEANUP OR TANK CLEANUP	10-10000ppm	10000	ppm	85,963	859.63	0.3899
AMMONIUM SOLN SALES TANK OFF SPEC TK160	WASTEWATER OFF THE REFINERY CRUDE BRINE WASHWATER SYSTEM	134	134	ppm	2,159,664	289.39	0.1313
					TOTAL:	47,170	21.40

Veolia ES Technical Solutions, L.L.C.
2016 Benzene Waste Operations NESHAP Annual Inspection Summary

Inspection Type	Problem Area	Date Detected	Time Detected	First Attempt at Repair	Date of Correction	Time of Correction
	Area	Detection	Detection	at Repair	Correction	Correction
Carbon monitoring	Tank 312 - breakthrough	4/29/2016	10:00 a.m.	4/29/2016	4/29/2016	12:30 p.m.
Carbon monitoring	Tank 310 breakthrough	5/27/2016	12:00 p.m.	5/28/2016	5/18/2016	10:30 a.m.
Carbon monitoring	Tank 308 breakthrough	5/27/2016	12:00 p.m.	5/28/2016	5/28/2016	10:30 a.m.
Carbon monitoring	Tank 310 west canister-breakthrough	8/8/2016	10:00 a.m.	8/9/2016	8/9/2016	9:30 a.m.
Carbon monitoring	Tank 30 carbon - breakthrough	8/8/2016	10:00 a.m.	8/9/2016	8/9/2016	9:30 a.m.
Carbon monitoring	Tank 6 carbon breakthrough	8/11/2016	9:00 a.m.	8/11/2016	8/11/2016	2:30 p.m.

RECEIVED
MAR 10 2017
AIR ENFORCEMENT BRANCH
U.S. EPA REGION 5

SME

5835 W. 74th Street
Indianapolis, IN 46278-1757

T (317) 876-0200

www.sme-usa.com

March 1, 2017

United States Environmental Protection Agency
Region 5 - Air Branch
USEPA (AR – 17J)
Air and Radiation Division
77 West Jackson Boulevard
Chicago, Illinois 60604

Re: Annual Compliance and Certification Report; NESHAP DDDDD, Major Source for Industrial, Commercial, and Institutional Boilers and Process Heaters; Material Sciences Corporation - ID# 031440AGL
SME Project Number: 072193.00

To Whom It May Concern,

Enclosed please find one (1) copy of the Annual Compliance and Certification Report for compliance with NESHAP DDDDD for the Material Sciences Corporation (MSC) facility located at 2300 East Pratt Boulevard in Elk Grove Village, Illinois – Permit ID# 031440AGL.

We trust this report meets with your expectations and is responsive to your needs. Please do not hesitate to call me at (317) 703-9896 or via email at alvarez@sme-usa.com if you have any questions.

Very truly yours,

SME

cosign

Jim Alvarez
Senior Consultant

Cc: Ed Kolozsy / Material Sciences Corporation

© 2017 SME

Annual Certification & Compliance Report

National Emission Standards for Hazardous Air Pollutants: Major Source Standards for Industrial, Commercial, and Institutional Boilers and Process Heaters

40 CFR 63 Subpart DDDDD

Section 1. Facility Information

Company name Material Sciences Corporation

Facility name (if different): _____

Facility (physical location) address: 2300 East Pratt Boulevard, Elk Grove Village, Illinois 60007

Facility telephone number (847) 439-2210

Is the Operator the same person as the Owner? Yes [X] No [ ]

If the Operator information is different from the Owner, please provide the following:

Operator name/title: _____

Operator telephone number: _____

Operator email address (if available): _____

Source category and NAICS code(s): 332812

Section 2. Date of Report and Reporting Period

Each subsequent annual certification and compliance report must cover the annual reporting period from January 1 through December 31.

Date: 3/1/2017

Reporting Period: 1/1/2016 - 12/31/2016

Section 3. Certification of Compliance Status

☐ Yes, the facility referenced below **IS** operating in compliance with all of the relevant standards and other requirements of 40 CFR Part 63 subpart DDDDD, National Emission Standards for Hazardous Air Pollutants: Major Source for Industrial, Commercial, and institutional boilers and process heaters.

☒ No, the facility referenced below is **NOT** operating in compliance with the relevant standards And/or other requirements of 40 CFR Part 63 subpart DDDDD, National Emission Standards for Hazardous Air Pollutants: Major Source for Industrial, Commercial, and institutional boilers and process heaters.

Reason for noncompliance:

Facility did not have CO meter/analyzer to measure CO and Oxygen concentrations in 2016. Facility is evaluating and will acquire CO / Oxygen meter in 2017 to collect appropriate measurements.

☒ No, there have been no changes in or additions to the processes at my facility and/or applicable requirements under 40 CFR Part 63 subpart DDDDD, National Emission Standards for Hazardous Air Pollutants: Major Source for Industrial, Commercial, and Institutional Boilers and Process Heaters since the last report.

I hereby certify that the information presented herein is correct to the best of my knowledge.

(Signature)	3/1/2017 (Date)
Mike Cocan VP/GM (Name/title)	847-718-8035 (Telephone No.)

5835 W. 74th Street
Indianapolis, IN 46278-1757

T (317) 876-0200

www.sme-usa.com

March 1, 2017

United States Environmental Protection Agency
Region 5 - Air Branch
USEPA (AR – 17J)
Air and Radiation Division
77 West Jackson Boulevard
Chicago, Illinois 60604

Re: Notification of Compliance Status; NESHAP DDDDD, Major Source for Industrial, Commercial, and Institutional Boilers and Process Heaters; Material Sciences Corporation - ID# 031440AGL
SME Project Number: 072193.00

To Whom It May Concern,

Enclosed please find one (1) copy of the Notification of Compliance Status for compliance with NESHAP DDDDD for the Material Sciences Corporation (MSC) facility located at 2300 East Pratt Boulevard in Elk Grove Village, Illinois – Permit ID# 031440AGL.

We trust this report meets with your expectations and is responsive to your needs. Please do not hesitate to call me at (317) 703-9896 or via email at alvarez@sme-usa.com if you have any questions.

Very truly yours,

SME

cosign

Jim Alvarez
Senior Consultant

Cc: Ed Kolozsy / Material Sciences Corporation

© 2017 SME

Notification of Compliance Status

National Emission Standards for Hazardous Air Pollutants:

Major Source - Industrial, Commercial, and Institutional Boilers and Process Heaters
40 CFR 63 subpart DDDDD

Section 1. Facility Information

Date of Notification of Compliance Status: 2/28/2017

☑ Existing Source ☐ New source: _____
(Date of startup)

Source category and NAICS code(s): 332812

_____

_____

Company name _____Material Sciences Corporation_____

Facility name (if different): _____

Facility (physical location) address:___2300 East Pratt Boulevard_____

_____Elk Grove Village, Illinois 60007_____

telephone number _____(847) 439-2210_____

Is the Operator the same person as the Owner? Yes ☐ No ☐

If the Operator information is different from the Owner, please provide the following:

Operator name/title: _____

Operator telephone number: _____

Operator email address (if available): _____

Section 2. Identification of Affected Operations

The following are the operations at this facility subject to Subpart DDDDD:

Natural Gas-fired Boilers - Standby Boiler #1 and Standby Boiler #2

Section 3. Compliance

CO Requirements - Monitoring:

Pursuant to 40 CFR 63.7540(a) 10, following January 31, 2016, the Permittee shall comply with the following tuneup requirements for each boiler and conduct tune-ups annually:

- ☐ As applicable, inspect the burner, and clean or replace any components of the burner as necessary (you may delay the burner inspection until the next scheduled shutdown). At units where entry into a piece of process equipment or into a storage vessel is required to complete the tune-up inspections, inspections are required only during planned entries into the storage vessel or process equipment.

- ☐ Inspect the flame pattern, as applicable, and adjust the burner as necessary to optimize the flame pattern. The adjustment should be consistent with the manufactuer's specifications, if available.

- ☐ Inspect the system controlling the air-to-fuel ratio, as applicable, and ensure that it is correctly calibrated and functioning properly. (The Permittee may delay the inspection until the next scheduled unit shutdown).

- ☐ Optimize total emissions of carbon monoxide. This optimization should be consistent with the manufacurer's specifications, if available.

- ☐ Measure the concentrations in the effluent stream of carbon monoxide in parts per million, by volume, and oxygen in volume percent, before and after the adjustments are made (measurements may be either on a dry or wet basis, as long as it is the same basis before and after the adjsutments are made). Measurements may be taken using a portable CO analyzer.

CO Requirements - Recordkeeping

Pursuant to 40 CFR 63.7540(a) 10, following January 31, 2016, the Permittee shall keep the following records:

- ☐ The concentrations of CO in the effluent stream in parts per million by volume, and oxygen in volume perent, measured at high fire or typical operating load, before and after the tuneup of the boiler.

- ☐ A description of any corrective actions taken as part of the tune-up.

- ☐ The type and amount of fuel used over the 12 months prior to the annual adjustment, but only if the unit was physically and legally capable of using more than one type of fuel during that period. Units sharing a fuel meter may estimate the fuel use by each unit.

Pursuant to 40 CFR Subpart DDDDD, following January 31, 2016, the source must meet the applicable recrodkeeping requirements of 40 CFR 63.7555.

Section 4. Certification of Compliance Status

☐ Yes, the facility referenced in this document **IS** operating in compliance with all of the relevant standards and other requirements of 40 CFR Part 63 subpart DDDDD, major source industrial, *commercial, and insitutional boilers and process heaters.*

☐ No, the facility referenced in this document is **NOT** operating in compliance with the relevant standards and/or other requirements of 40 CFR Part 63 subpart DDDDD, major source industrial, commercial, and insitutional boilers and process heaters.

Reason for noncompliance:

Facility did not have CO analyzer to measure CO and Oxygen concentrations in 2016. Facility is evaluating and will acquire CO / Oxygen meter in 2017 to collect appropriate measurements.

I hereby certify that the information presented herein is correct to the best of my knowledge.

(Signature) 3/1/2017 (Date)

Mike Cocanig UOM (Name/title) 847 718-8035 (Telephone No.)

Section 5. Submittal

Submit the Notification of Compliance Status to one of the following offices, as appropriate:

Illinois Environmental Protection Agency
Division of Air Pollution Control
Compliance and Enforcement Section (MC 40)
1021 North Grand Avenue East
P.O. Box 19276
Springfield, Illinois 62794-9276

EPA Region V
Director, Air and Radiation Division
77 West Jackson Blvd.
Chicago, IL 60604–3507

MSC Material Sciences Corporation

THE SCIENCE OF PERFORMANCE

RECEIVED
MAR 10 2017
AIR ENFORCEMENT BRANCH
U.S. EPA REGION 5

February 25, 2016

Region V Director
Air and Radiation Division
U.S. Environmental Protection Agency
77 West Jackson Boulevard
Chicago, IL 60604-3590

Illinois Environmental Protection Agency
Division of Air Pollution Control
Air Quality Planning Section (#39)
1021 North Grand Avenue East
P.O. Box 19276
Springfield, Illinois 62794-9276

RE: Semi-Annual Report Under 40 CFR Part 60 Subpart TT – Standards for Performance for Metal Coil Surface Coating – Monitoring of Emissions and Operations using Emission Control (Thermal Incineration) for the Line 4 Mezzanine Coater

Facility Name: Material Sciences Corporation

Facility Location: 2300 East Pratt Boulevard, Elk Grove Village, Illinois 60007

Facility ID No.: 031440AGL

CAAPP Permit No.: 96030091

Reporting time period: January 1, 2016 to June 30, 2016

In accordance with 40 CFR 60.465(d), for Coating Line 4 Mezzanine Coater, the owner or operator of each affected facility shall also submit reports at the frequency specified in 40 CFR 60.7(c) when the incinerator temperature drops as defined under 40 CFR 60.464(c):

Each owner or operator subject to the provisions of this subpart shall install, calibrate, operate, and maintain a device that continuously records the combustion temperature of any effluent gases incinerated to achieve compliance with 40 CFR 60.462(a)(2), (3), or (4).

No such periods occurred where the operations of the Line 4 Mezzanine Coater were not continuously monitored while coatings were applied.

Material Sciences Corporation has selected to achieve compliance using 40 CFR 60.462(a)(3) - each owner or operator subject to this subpart shall not cause to be discharged into the atmosphere more than 10 percent of the VOMs applied for each calendar month (90 percent emission reduction) for a facility continuously using an emission control device(s) operated at the most recently demonstrated overall efficiency.

Material Sciences Corporation did not discharge to the atmosphere more than 10 percent of the VOMs

applied for each calendar month of this reporting period.

Each owner or operator shall also record all periods (during actual coating operations) in excess of 3 hours during which the average temperature in any thermal incinerator used to control emissions from an affected facility remains more than 28 °C (50 °F) below the temperature at which compliance with § 60.462(a) (3) has been demonstrated.

While a VOM coating was being applied, there were no periods in excess of 3 hours during which the average temperature in the thermal incinerator remained more than 28 °C (50 °F) below the temperature at which compliance has been demonstrated.

By signing this semi-annual report, I certify that, to the best of my knowledge the above information is true and accurate. We trust this submittal meets with your expectations. Should you have any questions, please do not hesitate to contact us.

Sincerely,

David Kurz

David Kurz
Plant Manager
Cc: Ed Kolozsy / Material Sciences Corporation
Jim Alvarez / SME

MSC Material Sciences Corporation

THE SCIENCE OF PERFORMANCE

February 25, 2017

RECEIVED
MAR 10 2017
AIR ENFORCEMENT BRANCH
U.S. EPA REGION 5

Region V Director
Air and Radiation Division
U.S. Environmental Protection Agency
77 West Jackson Boulevard
Chicago, IL 60604-3590

Illinois Environmental Protection Agency
Division of Air Pollution Control
Air Quality Planning Section (#39)
1021 North Grand Avenue East
P.O. Box 19276
Springfield, Illinois 62794-9276

RE: Semi-Annual Report Under 40 CFR Part 60 Subpart TT – Standards for Performance for Metal Coil Surface Coating – Monitoring of Emissions and Operations using Emission Control (Thermal Incineration) for the Line 4 Mezzanine Coater

Facility Name: Material Sciences Corporation

Facility Location: 2300 East Pratt Boulevard, Elk Grove Village, Illinois 60007

Facility ID No.: 031440AGL

CAAPP Permit No.: 96030091

Reporting time period: July 1, 2016 to December 31, 2016

In accordance with 40 CFR 60.465(d), for Coating Line 4 Mezzanine Coater, the owner or operator of each affected facility shall also submit reports at the frequency specified in 40 CFR 60.7(c) when the incinerator temperature drops as defined under 40 CFR 60.464(c):

Each owner or operator subject to the provisions of this subpart shall install, calibrate, operate, and maintain a device that continuously records the combustion temperature of any effluent gases incinerated to achieve compliance with 40 CFR 60.462(a)(2), (3), or (4).

No such periods occurred where the operations of the Line 4 Mezzanine Coater were not continuously monitored while coatings were applied.

Material Sciences Corporation has selected to achieve compliance using 40 CFR 60.462(a)(3) - each owner or operator subject to this subpart shall not cause to be discharged into the atmosphere more than 10 percent of the VOMs applied for each calendar month (90 percent emission reduction) for a facility continuously using an emission control device(s) operated at the most recently demonstrated overall efficiency.

Material Sciences Corporation did not discharge to the atmosphere more than 10 percent of the VOMs

applied for each calendar month of this reporting period.

Each owner or operator shall also record all periods (during actual coating operations) in excess of 3 hours during which the average temperature in any thermal incinerator used to control emissions from an affected facility remains more than 28 °C (50 °F) below the temperature at which compliance with § 60.462(a) (3) has been demonstrated.

While a VOM coating was being applied, there were no periods in excess of 3 hours during which the average temperature in the thermal incinerator remained more than 28 °C (50 °F) below the temperature at which compliance has been demonstrated.

By signing this semi-annual report, I certify that, to the best of my knowledge the above information is true and accurate. We trust this submittal meets with your expectations. Should you have any questions, please do not hesitate to contact us.

Sincerely,

David Kurz

David Kurz
Plant Manager

Cc: Ed Kolozsy / Material Sciences Corporation
Jim Alvarez / SME

Ashland™
always solving

Ashland Inc.
14303 Paxton Ave
Calumet City, IL 60409

RECEIVED
MAR 10 2017
AIR ENFORCEMENT BRANCH
U.S. EPA REGION 5

Feb 25, 2016

CERTIFIED MAIL

USEPA (AE-17J)
Air & Radiation Division
77 West Jackson Blvd
Chicago, IL 60604-3507

RE: Combined Amino/Phenolic Resin Manufacturing MACT Periodic Report and Semi-Annual Monitoring Report

Dear Sir or Madam,

As required by the Amino/Phenolic Resin Manufacturing MACT (40 CFR 63, Subpart 000) and condition 3.5.b.i of the facility's Title V permit, the Ashland Inc., Calumet City, IL facility (Source ID No. 031039AAA) is providing this Combined Amino/Phenolic Resin Manufacturing MACT Periodic Report and Semi-Annual Monitoring Report. This report covers the period of 07/01/2016 to 12/31/2016.

The report consists of the following completed forms and attachments, which outline the applicable requirements of the rule and summarize the facility's compliance status during the applicable time period:

400-CAAPP - Compliance and General Reporting Form
405-CAAPP – Excess Emission, Monitoring Equipment Downtime, and Miscellaneous Reporting Form
Attachment 1 - Periodic Report for 40 CFR part 63, subpart OOO (63.1417(f))
Attachment 2 - Start-up, Shutdown, and Malfunction Report for 40 CFR part 63, subpart OOO (63.1417(g))
Attachment 3 - Periodic Report for 40 CFR part 63, subpart UU (63.1039(b))
Attachment 4 - Periodic Report for 40 CFR part 63, subpart SS (63.999(c))
Attachment 5 – Semi-Annual Monitoring Report – July 1, 216 to December 31, 2016
Attachment 6 –Controlled Shutdown & Malfunction Log
Semiannual Summary Report, Phenolics LDAR Jul-Dec 2016
Semiannual Summary Report, RCRA-BB LDAR Jul-Dec 2016
Exhibit 405-3 11/28/16 Thermal Oxidizer Power Loss

Authorization to combine the two reports was received from US EPA Region 5 on February, 16, 2005.

If you have any questions, please feel free to contact me at (708) 891-8284.

Yours sincerely,

Craig Bernard
Process Engineer
DIRECT+1 708 891 8284
cdbernard@ashland.com

CC: Illinois EPA, Bureau Of Air
Compliance & Enforcement Section (MC 40)
1021 North Grand Ave East
PO Box 19276
Springfield, IL 62794-9276

Illinois EPA, Bureau Of Air
Regional Office #1
9511 Harrison St.
Des Plaines, IL 60016

ILLINOIS ENVIRONMENTAL PROTECTION AGENCY
DIVISION OF AIR POLLUTION CONTROL -- PERMIT SECTION
P.O. BOX 19506 SPRINGFIELD, ILLINOIS 62794-9506

Revision #: _____
Date: ____ / ____ / ____
Page _____ of _____
Source Designation: _____

COMPLIANCE AND GENERAL REPORTING FORM	FOR AGENCY USE ONLY
	ID NUMBER:
	PERMIT #:
	DATE:

THIS FORM IS USED FOR EITHER OF THE FOLLOWING:

• TO REPORT AND CERTIFY COMPLIANCE OF AN ENTIRE SOURCE OR SPECIFIC ITEMS OF EQUIPMENT WITH ALL APPLICABLE REQUIREMENTS DURING A REPORTING PERIOD, OR • TO IDENTIFY AND ENSURE PROPER PROCESSING OF A SUBMITTED REPORT. THIS FORM SHOULD BE USED AS THE COVER SHEET OF THE SUBMITTED REPORT.

SOURCE INFORMATION

1) SOURCE NAME:
Ashland Specialty Ingredients

2) DATE FORM PREPARED:	3) SOURCE ID NO. (IF KNOWN):
2/25/2017	031039AAA

GENERAL INFORMATION

4) INDICATE FOR WHICH OF THE FOLLOWING THIS FORM IS BEING COMPLETED:

■ **TO REPORT AND CERTIFY COMPLIANCE OF THE SOURCE OR SPECIFIC ITEMS OF EQUIPMENT WITH ALL APPLICABLE REQUIREMENTS**

☐ **TO IDENTIFY AND ENSURE PROPER PROCESSING OF A SUBMITTED REPORT**

5) PERIOD COVERED BY THIS REPORT:

FROM: 07 / 01 / 2016 TO: 12 / 31 / 2016

6) NAME AND PHONE NUMBER OF PERSON TO CONTACT FOR QUESTIONS REGARDING THIS REPORT:

NAME: Craig Bernard TITLE: Process Engineer

PHONE#: (708) 891-8284 EXT: _____

THIS AGENCY IS AUTHORIZED TO REQUIRE THIS INFORMATION UNDER ILLINOIS REVISED STATUTES, 1991, AS AMENDED 1992, CHAPTER 111 1/2, PAR. 1039.5. DISCLOSURE OF THIS INFORMATION IS REQUIRED UNDER THAT SECTION. FAILURE TO DO SO MAY PREVENT THIS FORM FROM BEING PROCESSED AND COULD RESULT IN THE APPLICATION BEING DENIED. THIS FORM HAS BEEN APPROVED BY THE FORMS MANAGEMENT CENTER.

FOR APPLICANT'S USE

APPLICATION PAGE _____

Printed on Recycled Paper
400-CAAPP

COMPLIANCE OF SOURCE OR EQUIPMENT DURING REPORTING PERIOD

- COMPLETE ITEM 7 BELOW IF THIS FORM IS BEING USED TO REPORT AND CERTIFY COMPLIANCE OF THE ENTIRE SOURCE.
- COMPLETE ITEM 8 BELOW IF THIS FORM IS BEING USED TO REPORT AND CERTIFY COMPLIANCE OF SPECIFIC ITEMS OF EQUIPMENT ONLY.

7) WAS THE SOURCE IN COMPLIANCE WITH ALL APPLICABLE REQUIREMENTS FOR THE ENTIRE REPORTING PERIOD? Yes ☐ No ■

IF YES, THEN THE "REPORT INFORMATION" SECTION ON PAGE 3 OF THIS FORM DOES NOT NEED TO BE COMPLETED.

IF NO, THEN COMPLETE AND SUBMIT FORM CAAPP-405 -"EXCESS EMISSIONS, MONITORING EQUIPMENT DOWNTIME, AND MISCELLANEOUS REPORTING FORM."

8a) LIST THE EMISSION UNIT(S) AND CONTROL EQUIPMENT FOR WHICH THIS FORM IS BEING COMPLETED TO REPORT AND CERTIFY COMPLIANCE WITH (IF ADDITIONAL SPACE IS NEEDED FOR ITEM 10, ATTACH AND LABEL AS EXHIBIT 400-A):

Not applicable (reporting for source)

b) IDENTIFY THE APPLICABLE REQIREMENT(S) FOR WHICH THIS FORM IS BEING USED TO REPORT AND CERTIFY COMPLIANCE WITH:

Not applicable (reporting for source)

c) IDENTIFY THE APPLICABLE REQIREMENT(S) WHICH REQUIRE THAT THIS REPORT OR CERTIFICATION BE SUBMITTED:

Not applicable (reporting for source)

d) WERE THE ABOVE REFERENCED ITEMS IN 8(a) IN COMPLIANCE WITH ALL APPLICABLE REQUIREMENTS FOR THE ENTIRE REPORTING PERIOD? YES ☐ NO ☐

IF YES, THEN THE "REPORT INFORMATION" SECTION ON PAGE 3 OF THIS FORM DOES NOT NEED TO BE COMPLETED.

IF NO, THEN COMPLETE AND SUBMIT FORM CAAPP-405 - "EXCESS EMISSIONS, MONITORING EQUIPMENT DOWNTIME, AND MISCELLANEOUS REPORTING FORM."

REPORT INFORMATION

9) TITLE OF REPORT BEING SUBMITTED:

Semi-annual monitoring report for CAAPP and the periodic report required by the Amino/Phenolic Resin Manufacturing MACT.

10) IDENTIFY THE APPLICABLE REQIREMENT(S) WHICH REQUIRES THIS REPORT (IF APPLICABLE):

40 FR 63.1417(f), and CAAPP Title V operating permit condition 3.5.b.i.

11) BRIEFLY EXPLAIN WHAT THIS REPORT COVERS:

All requirements of the Amino/Phenolic Resin Manufacturing MACT, as summarized in Attachments 1-4.

CAAPP permit monitoring requirements for this source, as summarized in Attachments 5-6.

12) ATTACH THE REPORT TO THIS FORM.

SIGNATURE BLOCK

NOTE: THIS CERTIFICATION MUST BE SIGNED BY A RESPONSIBLE OFFICIAL. APPLICATIONS WITHOUT A SIGNED CERTIFICATION WILL BE RETURNED AS INCOMPLETE.

13) I CERTIFY UNDER PENALTY OF LAW THAT, BASED ON INFORMATION AND BELIEF FORMED AFTER REASONABLE INQUIRY, THE STATEMENTS AND INFORMATION CONTAINED IN THIS APPLICATION ARE TRUE, ACCURATE AND COMPLETE.

AUTHORIZED SIGNATURE:

BY: _____ AUTHORIZED SIGNATURE

_Director Of Manufacturing, ASI___ TITLE OF SIGNATORY

_Benjamin Caudill_____ TYPED OR PRINTED NAME OF SIGNATORY

2 / 28 / 17 DATE

APPLICATION PAGE _____

Printed on Recycled Paper

400-CAAPP

ILLINOIS ENVIRONMENTAL PROTECTION AGENCY
DIVISION OF AIR POLLUTION CONTROL -- PERMIT SECTION
P.O. BOX 19506 SPRINGFIELD, ILLINOIS 62794-9506

Revision #: _____
Date: ____ / ____ / ____
Page _____ of _____
Source Designation: _____

	FOR AGENCY USE ONLY
EXCESS EMISSIONS, MONITORING EQUIPMENT DOWNTIME, AND MISCELLANEOUS REPORTING FORM	ID NUMBER:
	PERMIT #:
	DATE:

THIS FORM IS TO BE USED TO REPORT THE FOLLOWING:

- EXCESS EMISSIONS. I.E., THE AMOUNT OF EMISSIONS EXCEEDS THAT OF AN EMISSION STANDARD, PERMIT LIMIT OR OTHER APPLICABLE REQUIREMENT
- DOWNTIME OF EMISSIONS MONITORING OR OTHER COMPLIANCE MONITORING EQUIPMENT IS NOT SPECIFIED IN THE PERMIT
- MISCELLANEOUS INCIDENTS OF POSSIBLE NONCOMPLIANCE TO AN APPLICABLE REQUIREMENT

SOURCE INFORMATION

1) SOURCE NAME:
Ashland Specialty Ingredients

2) DATE FORM PREPARED:	3) SOURCE ID NO. (IF KNOWN):
2/25/2016	031039AAA

GENERAL INFORMATION

4) INDICATE WHICH OF THE FOLLOWING THIS FORM IS BEING USED TO REPORT:

☐ **EXCESS EMISSIONS**

☐ **DOWNTIME OF EMISSIONS MONITORING OR OTHER COMPLIANCE MONITORING EQUIPMENT NOT SPECIFIED IN THE PERMIT**

■ **MISCELLANEOUS INCIDENT OF POSSIBLE NON COMPLIANCE**

5) PERIOD COVERED BY THIS REPORT:

FROM: 7 / 1 / 2016 TO: 12 / 31 / 2016

6) NAME AND PHONE NUMBER OF PERSON TO CONTACT FOR QUESTIONS REGARDING THIS REPORT:

NAME: Craig Bernard TITLE: Process Engineer

PHONE#: (708) 891-8284 EXT: _____

THIS AGENCY IS AUTHORIZED TO REQUIRE THIS INFORMATION UNDER ILLINOIS REVISED STATUTES, 1991, AS AMENDED 1992, CHAPTER 111 1/2, PAR. 1039.5. DISCLOSURE OF THIS INFORMATION IS REQUIRED UNDER THAT SECTION. FAILURE TO DO SO MAY PREVENT THIS FORM FROM BEING PROCESSED AND COULD RESULT IN THE APPLICATION BEING DENIED. THIS FORM HAS BEEN APPROVED BY THE FORMS MANAGEMENT CENTER.

FOR APPLICANT'S USE

APPLICATION PAGE _____

Printed on Recycled Paper
405-CAAPP

EXCESS EMISSIONS

7) IDENTIFY THE EMISSION UNIT(S) AND ASSOCIATED CONTROL EQUIPMENT WHICH EXCEEDED AN EMISSION STANDARD, PERMIT CONDITION LIMIT, OR OTHER APPLICABLE REQUIREMENT (IF ADDITIONAL SPACE IS NEEDED FOR THIS SECTION, ATTACH AND LABEL AS EXHIBIT 405-1):

8) IDENTIFY THE EMISSION STANDARD(S) OR LIMIT(S) THAT WAS EXCEEDED:

9a) PROVIDE THE TYPE(S) AND AMOUNT(S) OF EMISSIONS THAT OCCURRED DURING THE EXCEEDANCE IN UNITS IDENTICAL TO THAT OF EACH EMISSION STANDARD OR LIMIT THAT WAS EXCEEDED:

b) ATTACH THE CALCULATIONS, TO THE EXTENT THEY ARE AIR EMISSIONS RELATED, ON WHICH THESE EMISSIONS WERE BASED AND LABEL AS EXHIBIT 405-1.

10) DURATION OF EXCEEDANCE (E.G., 1 HOUR & 50 MINUTES):

11) DATE OF OCCURRENCE OF EXCEEDANCE:

_____ / _____ / _____

12) DESCRIBE THE EXCEEDANCE INCIDENT, INCLUDING THE SUSPECTED OR KNOWN CAUSE OF THE EXCEEDANCE:

13) DESCRIBE CORRECTIVE ACTIONS TAKEN AT THE TIME OF THE EXCEEDANCE INCIDENT:

14) DESCRIBE SUBSEQUENT ACTIONS TAKEN TO PREVENT FUTURE EXCEEDANCES:

UNPERMITTED DOWNTIME OF MONITORING EQUIPMENT

15) IDENTIFY THE MONITORING EQUIPMENT WHICH WAS NONFUNCTIONAL, INCLUDING THE MONITORED PARAMETER AND THE EMISSION UNIT(S) AND/OR CONTROL EQUIPMENT BEING MONITORED:

16) DATE MONITOR WAS DOWN:

_____ / _____ / _____

17) DURATION OF MONITOR DOWNTIME (E.G., 1 HOUR & 50 MINUTES):

18) DESCRIBE THE SUSPECTED OR KNOWN CAUSE OF THE MONITOR FAILURE:

19) DESCRIBE CORRECTIVE ACTIONS TAKEN AT THE TIME OF MONITOR FAILURE:

20) DESCRIBE SUBSEQUENT ACTIONS TAKEN TO PREVENT FUTURE FAILURES:

MISCELLANEOUS INCIDENT

21) DESCRIBE THE INCIDENT AND IDENTIFY THE EMISSION UNIT(S) AND CONTROL EQUIPMENT INVOLVED:

On November 28th, 2016, the plant experienced a complete power outage. This caused a safety shutdown of the thermal oxidizer, during which temperature was not maintained >1450C for 26 minutes. The process vent valve to the thermal oxidizer typically fails closed in this circumstance, but in-process data collection was unavailable during the outage to demonstrably prove no emission.

22) PROVIDE THE RULE(S) OR PERMIT CONDITION(S) WHICH MAY HAVE BEEN VIOLATED (IF APPLICABLE):

CAAPP Title V operating permit, condition 4.2.2.c.ii.A.I

23) DATE OF OCCURRENCE OF THE INCIDENT:

11 / 28 / 2016

24) DURATION OF THE INCIDENT (E.G., 1 HOUR & 50 MINUTES):

Approximately 26 minutes

25a) PROVIDE THE TYPE AND AMOUNT OF EMISSIONS THAT OCCURRED DURING THE INCIDENT IN UNITS IDENTICAL TO THAT OF EACH EMISSION STANDARD OR LIMIT (IF APPLICABLE):

A maximum of 3.29 lbs of VOM was emitted.

Per 25(b), please see calculations in Exhibit 405-3.

b) ATTACH THE CALCULATIONS, TO THE EXTENT THEY ARE AIR EMISSIONS RELATED, ON WHICH THESE EMISSIONS WERE BASED AND LABEL AS EXHIBIT 405-3.

26) DESCRIBE THE SUSPECTED OR KNOWN CAUSE OF THE INCIDENT:

Power loss to the plant.

27) DESCRIBE CORRECTIVE ACTIONS TAKEN AT THE TIME OF THE INCIDENT:

None

28) DESCRIBE SUBSEQUENT ACTIONS TAKEN TO PREVENT FUTURE INCIDENTS:

Repaired database for in-process data collection.

29) PROVIDE ANY OTHER PERTINENT INFORMATION:

Reported by telephone to the IEPA Des Plaines Regional Office (Mr. Paul Maly) on December 8th, 2016. Written report was submitted to the IEPA on the same date.

SIGNATURE BLOCK

NOTE: THIS CERTIFICATION MUST BE SIGNED BY A RESPONSIBLE OFFICIAL. APPLICATIONS WITHOUT A SIGNED CERTIFICATION WILL BE RETURNED AS INCOMPLETE.

30) I CERTIFY UNDER PENALTY OF LAW THAT, BASED ON INFORMATION AND BELIEF FORMED AFTER REASONABLE INQUIRY, THE STATEMENTS AND INFORMATION CONTAINED IN THIS APPLICATION ARE TRUE, ACCURATE AND COMPLETE.

AUTHORIZED SIGNATURE:

BY: _____ AUTHORIZED SIGNATURE

_Director Of Manufacturing, ASI___ TITLE OF SIGNATORY

_Benjamin Caudill_____ TYPED OR PRINTED NAME OF SIGNATORY

2 / 28 / 17 DATE

ATTACHMENT 1
PERIODIC REPORT FOR 40 CFR PART 63, Subpart OOO (63.1417(f))

(f) Periodic Reports. For existing and new affected sources, each owner or operator shall submit Periodic Reports as specified in paragraph (f)(1) of this section. In addition, for equipment leaks subject to Sec. 63.1410, the owner or operator shall submit the information specified in 40 CFR part 63, subpart UU, and for heat exchange systems subject to Sec. 63.1409, the owner or operator shall submit the information specified in Sec. 63.1409. Section 63.1415 shall govern the use of monitoring data to determine compliance for emissions points required to apply controls by the provisions of this subpart.

- **Review of 40 CFR part 63, subpart UU is included in Attachment 3.**
- **The Heat Exchange system is designated as the "main cooling tower". Quarterly water testing was performed for the main cooling tower during this reporting period as required. The correct number of samples were taken and analyzed for all parameters as required. The results of the testing demonstrated that there are <u>no</u> leaks in the heat exchange system.**

(1)Except as specified in paragraph (f)(12) of this section, a report containing the information in paragraph (f)(2) of this section or containing the information in paragraphs (f)(3) through (11) of this section, as appropriate, shall be submitted semiannually no later than 60 days after the end of each 180 day period. The first report shall be submitted no later than 240 days after the date the Notification of Compliance Status is due and shall cover the 6-month period beginning on the date the Notification of Compliance Status is due. Subsequent reports shall cover each preceding 6-month period.

- **This report covers the period of 07/01/2016 through 12/31/2016. This report is a combined Periodic Report and Title V Semi-Annual Monitoring report. Authorization to combine these reports was received from US EPA Region 5 on February 16, 2005.**

(2) If none of the compliance exceptions specified in paragraphs (f)(3) through (11) of this section occurred during the 6-month period, the Periodic Report required by paragraph (f)(1) of this section shall be a statement that the affected source was in compliance for the preceding 6-month period and no activities specified in paragraphs (f)(3) trough (11) of this section occurred during the preceding 6-month period.

- **None of the specified activities occurred during the preceding 6-month period.**

(3) for an owner or operator of an affected source complying with the provisions of Secs. 63.1404 through 63.1409 for any emission point, Periodic Reports shall include:

(i) All information specified in 40 CFR part 63, subpart WW and subpart SS for storage vessels; 40 CFR part 63, subpart SS for continuous process vents; Sec. <u>63.1416(d)(3)(ii) for batch process vents</u>; and Sec. 63.1416(e) for aggregate batch vent stream.

(ii) the daily average values, batch cycle daily average values, or block average values of monitored parameters for deviations, as specified in Sec. 63.1416(h), of operating parameters. In addition, the periods and duration of periods when monitoring data were not collected shall be specified.

- **The source complies with the operating limits as listed in 63.1415(b)(1)(ii) for liquid flow measurement and the alternative monitoring of daily pressure differential readings for each of the R-401 and R-601 scrubbers. The operating limits as listed in the Title V permit during batch production of a product are as follows: for R-401 scrubber greater than 3 gallons per minute water flow averaged over a 15-minute time period, and for R-601 scrubber greater than 3 gallons per minute water flow averaged over 15-minute time period.**

(4) Notification if one or more emission point(s) or one or more APPU is added to an affected source. The owner or operator shall submit the following information:

(i) A description of the addition to the affected source;

(ii) Notification of applicability status (i.e., does the emission point require control) of the addition emission point, if appropriate, or notification of all emission points in the added APPU.

➢ **N/A**

(5) If there is a deviation from the mass emission limit specified in Sec. 63.1406(a)(1)(iii), Sec. 63.1407(b)(2), or Sec. 63.1408(b)(2), the following information, as appropriate, shall be included:

➢ **N/A**

(6) If any performance tests are reported in a Periodic Report, the following information shall be included:

➢ **N/A, no performance tests were performed during the period of this Periodic Report.**

(7) The Periodic Report shall include the results for each change made to a primary product determination for amino/phenolic resins made under Sec. 63.1400(g).

➢ **N/A**

(8) The Periodic Report shall include the results for each change made to a predominant use determination for a storage vessel belonging to an affected source subject to this subpart that is made under Sec. 63.1400(h)(6).

➢ **N/A**

(9) If an owner or operator invokes the delay of repair provisions for a heat exchange system, the following information shall be submitted, as appropriate. If the leak remains unrepaired, the information shall also be submitted in each subsequent periodic report until repair of the leak is reported.

➢ **N/A**

(10) Notification that the owner or operator has elected to comply with Sec. 63.1416(h), Reduced Recordkeeping Program.

➢ **N/A**

(11) Notification that the owner or operator has elected to not retain the daily average, batch cycle daily average, or block average values, as appropriate, as specified in Sec. 63.1416(h)(2)(i).

➢ **N/A**

(12) The owner or operator of an affected source shall submit quarterly reports for particular emission points as specified in paragraphs (f)(12)(i) through (iv) of this section.

➢ **N/A, quarterly reporting has not been requested by the Administrator.**

ATTACHMENT 2
START-UP, SHUTDOWN, AND MALFUNCTION REPORT FOR 40 CFR PART 63, Subpart OOO (63.1417(g))

(g) Start-up, shutdown, and malfunction reports. For the purposes of this subpart, the semiannual start-up, shutdown, and malfunction reports shall be resubmitted on the same schedule as the Periodic Reports required under paragraph (f) of this section instead of being submitted on the schedule specified in Sec. 63.10(d)(5)(i). Said reports shall include the information specified in Sec. 63.1416(b)(1) and (2) and shall contain the name, title, and signature of the owner or operator or other responsible official who is certifying its accuracy.

- **See Attachment 6 – Controlled Shutdown & Malfunction Log**
- **The name, title, and signature of the responsible official are listed on the Compliance and General Reporting Form (400-CAAPP) submitted with this Periodic Report.**

(1) Records of the occurrence and duration of each start-up, shutdown, and malfunction of operation of process equipment, or control devices, or recovery devices, or continuous monitoring systems, or control technologies used to comply with this subpart during which excess emissions (as defined in 63.1400(k)(4)) occur.

- **During this period, there were no start-up, shutdown or malfunctions (as defined in 63.1400(k)(4)) that involved the release of excess emissions.**

(2) For each start-up, shutdown, or malfunction during which excess emissions (as defined in 63.1400(k)(4)) occur, records reflecting whether the procedures specified in the affected source's start-up, shutdown, and malfunction plan were followed and documentation of actions taken that are not consistent with the plan.

- **N/A**

ATTACHMENT 3
40 CFR PART 63, Subpart UU (63.1039(b)) Periodic Report

Subpart UU – National Emission Standards for Equipment Leaks – Control Level 2 Standards

§63.1039 Reporting requirements.

(b) Periodic Reports. The owner or operator shall report the information specified in paragraphs (b)(1) through (b)(8) of this section, as applicable, in the Periodic Report specified in the referencing subpart.

(1) For the equipment specified in paragraphs (b)(1)(i) through (b)(1)(v) of this section, report in a summary format by equipment type, the number of components for which leaks were detected and for valves, pumps and connectors show the percent leakers, and the total number of components monitored. Also include the number of leaking components that were not repaired as required by §63.1024, and for valves and connectors, identify the number of components that are determined by §63.1025(c)(3) to be nonrepairable.
(i) Valves in gas and vapor service and in light liquid service pursuant to §63.1025(b) and (c).
(ii) Pumps in light liquid service pursuant to §63.1026(b) and (c).
(iii) Connectors in gas and vapor service and in light liquid service pursuant to §63.1027(b) and (c).
(iv) Agitators in gas and vapor service and in light liquid service pursuant to §63.1031(d).
(v) Compressors pursuant to §63.1028(c).

- **No leaks were detected during this period.**
- **Total components monitored during the reporting period are summarized as:**
  - **Valves - 212 valves monitored. No leaks found.**
  - **Pumps – It should be noted that all APPU pumps in organic HAP service are exempt from the monthly monitoring and visual inspection requirements of 40CFR63.1026 because they are either in heavy liquid service, gas/vapor service, or are magnetic drive design.**
  - **Connectors – 1064 monitored. No leaks found**
  - **Agitators – 3 monitored monthly; weekly visual inspections. Documentation of the weekly visual inspections exists for each week of this reporting period. No leaks were detected, either by visual inspection or instrument monitoring, during this reporting period.**
  - **Compressors – N/A, none exist for this source.**

(2) Where any delay of repair is utilized pursuant to §63.1024(d), report that delay of repair has occurred and report the number of instances of delay of repair.

- **N/A**

(3) If applicable, report the valve subgrouping information specified in §63.1025(b)(4)(iv).

- **N/A**

(4) For pressure relief devices in gas and vapor service pursuant to §63.1030(b) and for compressors pursuant to §63.1031(f) that are to be operated at a leak detection instrument reading of less than 500 parts per million, report the results of all monitoring to show compliance conducted within the semiannual reporting period.

- **Relief- 5 monitored. No leaks found.**

(5) Report, if applicable, the initiation of a monthly monitoring program for valves pursuant to §63.1025(b)(3)(i).

- **N/A**

(6) Report, if applicable, the initiation of a quality improvement program for pumps pursuant to §63.1035.

- **N/A**

(7) Where the alternative means of emissions limitation for batch processes is utilized, report the information listed in §63.1036(f).

- **N/A**

(8) Report the information listed in paragraph (a) of this section for the Initial Compliance Status Report for process units or affected facilities with later compliance dates. Report any revisions to items reported in an earlier Initial Compliance Status Report if the method of compliance has changed since the last report.

- **Valves**
  - **As of 06/30/14, there were 300 valves in organic HAP service (>300 hours/year) within the APPU, of which 76 were in heavy liquid service.**

ATTACHMENT 4
40 CFR PART 63, Subpart SS (63.999(c)) Periodic Report

Subpart SS – National Emission Standards for Closed Vent Systems, Control Devices, Recovery Devices and Routing to a Fuel Gas System or a process Source: 64 FR 34866, June 29, 1999, unless otherwise noted.

63.999 Notifications and other reports.

(c) Periodic reports.

(1) Periodic reports shall include the reporting period dates, the total source operating time for the reporting period, and, as applicable, all information specified in this section and in the referencing subpart, including reports of periods when monitored parameters are outside their established ranges.

- **This periodic report covers the period of 07/01/2016 to 12/31/2016.**
- **The estimated source's operating time for the reporting period is 1892 hours (1015.3 hours for R-401 and 876.7 hours for R-601).**

(2) For closed vent systems subject to the requirements of §63.983, the owner or operator shall submit as part of the periodic report the information specified in paragraphs (c)(2)(i) through (iii) of this section, as applicable.
(i) The information recorded in §63.998(d)(1)(iii)(B) through (E);

- **There were no leaks found (by instrument reading or during visual inspection) during the reporting period for the closed vent systems subject to the requirements of §63.983.**

(ii)Reports of the times of all periods recorded under §63.998(d)(1)(ii)(A) when the vent stream is diverted from the control device through a bypass line; and

- **N/A. The bypass was replaced with a flange on March 17, 2006. Thus, there is no longer a bypass on the R-401 scrubber. This information was reported in the Annual Title V compliance certification report dated April 27, 2006.**

(iii) Reports of all times recorded under §63.998(d)(1)(ii)(B) when maintenance is performed in car-sealed valves, when the seal is broken, when the bypass line valve position is changed, or the key for a lock-and-key type configuration has been checked out.

- **There was no such maintenance during the time period for this report.**

(3) For flares subject to this subpart, report all periods when all pilot flames were absent or the flare flame was absent as recorded in §63.998(a)(1)(i)(C).

- **N/A**

(4) For storage vessels, the owner or operator shall include in each periodic report required the information specified in paragraphs (c)(4)(i) through (iii) of this section.
(i) For the 6-month period covered by the periodic report, the information recorded in §63.998(d)(2)(ii)(A) through (C).
(ii) For the time period covered by the periodic report and the previous periodic report, the total number of hours that the control system did not meet the requirements of §63.983(a), 63,985(a), or 63.987(a) due to planned routine maintenance.
(iii) A description of the planned routine maintenance during the next 6-month periodic reporting period that is anticipated to be performed for the control system when it is not expected to meet the required control efficiency. This description shall include the type of maintenance necessary, planned frequency of maintenance, and expected lengths of maintenance periods.

- **N/A**

(5) If a control device other than a flare is used to control emissions from storage vessels or low throughput transfer racks, the periodic report shall describe each occurrence when the monitored parameters were outside of the parameter ranges documented in the Notification of Compliance Status in accordance with paragraph (b)(3) of this section. The description shall include the information specified in paragraphs (c)(5)(i) and (ii) of this section.
(i) Identification of the control device for which the measured parameters were outside of the established ranges, and
(ii) The cause for the measured parameters to be outside of the established ranges.

- **N/A**

(6) For process vents and transfer racks (except low throughput transfer racks), periodic reports shall include the information specified in paragraphs (c)(6)(i) through (iv) of this section.
(i) Periodic reports shall include the daily average values of monitored parameters, calculated as specified in §63.998(b)(3)(i) for any days when the daily average value is outside the bounds as defined in §63.998(c)(2)(iii) or (c)(3)(iii), or the data availability requirements defined in paragraphs (c)(6)(i)(A) through (D) of this section are not met, whether these excursions are excused or unexcused excursions. For excursions caused by lack of monitoring data, the duration of periods when monitoring data were not collected shall be specified. An excursion means any of the cases listed in paragraphs (c)(6)(i)(A) through (C) of this section. If the owner or operator elects not to retain the daily average values pursuant to §63.998(b)(5)(ii)(A), the owner or operator shall report this in the Periodic Report.
(A) When the daily average value of one or more monitored parameters is outside the permitted range.
(B) When the period of control or recovery device operation is 4 hours or greater in an operating day and monitoring data are insufficient to constitute a valid hour of data for at least 75 percent of the operating hours.
(C) When the period of control or recovery device operation is less than 4 hours in an operating day and more than one of the hours during the period of operation does not constitute a valid hour of data due to insufficient monitoring data.
(D) Monitoring data are insufficient to constitute a valid hour of data as used in paragraphs (c)(6)(i)(B) and (C) of this section, if measure values are unavailable for any of the 15-minute periods within the hour.

- **Daily average values of monitored parameters are not required for this source.**
- **As stated in the Notification of Compliance Status report dated 6/20/03, the operating day is the entire period of the batch cycle.**
- **Other than the monitoring data events (if any) listed in Attachment 1, number (3)(ii), all other values were within the documented range, during the operating days of this reporting period, as per 63.998(b)(3)(ii).**

(ii) Report all carbon-bed regeneration cycles during which the parameters recorded under §63.998(a)(2)(ii)(C) were outside the ranges established in the Notification of Compliance Status or in the operating permit.
(iii) The provisions of paragraph (c)(6)(i) and (ii) of this section do no apply to any low throughput transfer rack for which the owner or operator has elected to comply with §63.985 or to any storage vessel for which the owner or operator is not required, by the applicable monitoring plan whether the provisions of paragraphs (c)(6)(i) and (c)(6)(ii) of this section apply.

- **N/A**

(iv) If the owner or operator has chosen to use the alternative recordkeeping requirements of §63.998(b)(5), and has not notified the Administrator in the Notification of Compliance Status that the alternative recordkeeping provisions are being implemented as specified in paragraph (b)(5) of this section, the owner or operator shall notify the Administrator in the Periodic Report

submitted immediately preceding implementation of the alternative. The notifications specified in §63.998(b)(5)(ii) shall be included in the next Periodic Report following the identified event.

- **N/A**

(7) As specified in §63.997(c)(3), if an owner or operator at a facility not required to obtain a title V permit elects at a later date to replace an existing control or recovery device with a different control or recovery device, then the Administrator shall be notified by the owner or operator before implementing the change. This notification may be included in the facility's periodic reporting.

- **N/A**

Attachment 5
Semi-Annual Monitoring Report - July 1, 2016 to December 31, 2016

Below is a review of all monitoring requirements, summarizing required monitoring results and instances of deviations from permit requirements, as listed by the CAAPP permit conditions.

Condition 4.1.2.a.ii.A: Reactor 401 & 601 opacity.

- Not monitored during calendar year 2016. This new requirement was included in the renewed CAAPP permit issued 6/29/16. Permit was not effective for the entire calendar year; monitoring will be done within one year of permit issue.

Condition 4.1.2.b.ii.A: Reactor 401 & 601 particulate matter.

- Not monitored during calendar year 2016. This new requirement was included in the renewed CAAPP permit issued 6/29/16. Permit was not effective for the entire calendar year; monitoring will be done within one year of permit issue.

Condition 4.1.2.c.ii.B.I: Reactor 401 & 601 scrubbant flow.

- Monitored continuously per requirements of CAAPP permit. No deviations.

Condition 4.1.2.d.ii.D.I.: Reactor 401 & 601 scrubbant flow.

- Monitored continuously per requirements of CAAPP permit. No deviations.

Condition 4.1.2.c.ii.B.II: Reactor 401 & 601 scrubber pressure drop.

- Monitored daily per requirements of CAAPP permit. No deviations.

Condition 4.1.2.d.ii.D.II: Reactor 401 & 601 scrubber pressure drop.

- Monitored daily per requirements of CAAPP permit. No deviations.

Condition 4.1.2.c.ii.D: Reactor 401 & 601 annual inspection.

- Reactor 401 scrubber inspection was performed 10/25/16.
- Reactor 601 scrubber inspection was performed 10/24/16.

Condition 4.1.2.d.ii.A.I: Reactor 401 & 601 cooling water HAPs.

- Monitored quarterly per requirements of CAAPP permit. No deviations.

Condition 4.1.2.e.ii.A: Reactor 401 & 601 production limits.

- Monitored monthly per requirements of CAAPP permit. No deviations.

Condition 4.2.2.a.ii.A: Thermal oxidizer opacity.

- Not monitored during calendar year 2016. This new requirement was included in the renewed CAAPP permit issued 6/29/16. Permit was not effective for the entire calendar year; monitoring will be done within one year of permit issue.

Condition 4.2.2.b.ii.A: Thermal oxidizer particulate matter.

- Not monitored during calendar year 2016. This new requirement was included in the renewed CAAPP permit issued 6/29/16. Permit was not effective for the entire calendar year; monitoring will be done within one year of permit issue.

Condition 4.2.2.c.ii.A.I: Thermal oxidizer temperature.

- November 28, 2016 – Due to loss of power, thermal oxidizer tripped and temperature fell to <1450C for 26 minutes. Though process vent valve normally fails to the closed

position, process data was not available to demonstrably show that that thermal oxidizer was not operating while temperature was below required limit. For details, refer to 405-CAAPP Excess Emission, Monitoring Equipment Downtime, and Miscellaneous Reporting Form.

Condition 4.2.2.d.ii.A: Thermal oxidizer production limits.

- Monitored monthly per requirements of CAAPP permit. No deviations.

Condition 4.3.2.a.ii.A: Packaging opacity.

- Not monitored during calendar year 2016. This new requirement was included in the renewed CAAPP permit issued 6/29/16. Permit was not effective for the entire calendar year; monitoring will be done within one year of permit issue.

Condition 4.3.2.b.ii.A: Packaging VOM.

- Monitored monthly per requirements of CAAPP permit. No deviations.

Condition 4.3.2.c.ii.A: Packaging production limits.

- Monitored monthly per requirements of CAAPP permit. No deviations.

Condition 4.4.2.a.ii.A: Storage tanks opacity.

- Not monitored during calendar year 2016. This new requirement was included in the renewed CAAPP permit issued 6/29/16. Permit was not effective for the entire calendar year; monitoring will be done within one year of permit issue.

Condition 4.4.2.b.ii.A: Storage tanks VOM.

- Monitored monthly per requirements of CAAPP permit. No deviations.

Condition 4.4.2.c.ii.A: Storage tanks production limits.

- Monitored monthly per requirements of CAAPP permit. No deviations.

Condition 4.5.2.a.ii.A: Boiler 3 & 4 opacity.

- Not monitored during calendar year 2016. This new requirement was included in the renewed CAAPP permit issued 6/29/16. Permit was not effective for the entire calendar year; monitoring will be done within one year of permit issue.

Condition 4.5.2.b.ii.A: Boiler 3 & 4 particulate matter.

- Monitored monthly per requirements of CAAPP permit. No deviations.

Condition 4.5.2.c.ii.A: Boiler 3 & 4 SO2.

- Monitored monthly per requirements of CAAPP permit. No deviations.

Condition 4.5.2.d.ii.A: Boiler 3 & 4 VOM.

- Monitored monthly per requirements of CAAPP permit. No deviations.

Condition 4.5.2.e.ii.A: Boiler 3 & 4 CO.

- Monitored monthly per requirements of CAAPP permit. No deviations.

Condition 4.5.2.f.ii.A: Boiler 3 & 4 NO.

- Monitored monthly per requirements of CAAPP permit. No deviations.

NOTE: In order to reduce water and energy consumption, the scrubbers and thermal oxidizer are sometimes shut down during periods when their associated emission sources are not in operation (weekends, holidays, etc).

ATTACHMENT 6
Controlled Shutdown & Malfunction Log

Dates	Control Equipment	Description and Duration	Explanation of Potential Deviation	Corrective Actions Summary:
October, 16	Thermal Oxidizer R401 Scrubber Flow & DP R601 Scrubber Flow & DP	Planned annual maintenance outtage from 10/22/16 7:00 AM to 10/28/2016.	*No deviation. Plant was down per plan, and there was no data collected during this time due to power outtage (UPS replacement.) All reactors/blend tanks were empty and offline.*	NA
November, 16	Thermal Oxidizer	Two instantaneous power blips on 12/8/16 that caused 15-min rolling average combustion chamber temperature fell below 1450°C from 19:42 - 19:54 and from 20:11 - 20:25 (26 minutes total.)	*Thermal oxidizer ave combustion chamber temp was <1450°C for 26 minutes due to power blip & trip. No historical data to show that process gas valve was closed (typical automated response.) Appx 3.29 lb potential emission.*	Repaired DeltaV app station, restoring primary data historian for plant.

Ashland Inc.
140 2nd & Paxton Avenue
Calumet City, IL 60409

Report Period 07/01/2016 - 12/31/2016

Process Unit: PHENOLIC **Monitoring Program:** PHENOLIC

01/10/2017

SEMIANNUAL SUMMARY REPORT

LEAK REPORT

	July 2016	August 2016	September 2016	October 2016	November 2016	December 2016
Valves	(300 In Unit)	(300 In Unit)	(300 In Unit)	(300 In Unit)	(300 In Unit)	(300 In Unit)
Monitored	212	0	0	212	0	0
Leaks Detected	0 (0.00%)	0	0	0 (0.00%)	0	0
Leaks Not Repaired within 15 Days	0	0	0	0	0	0
Pumps	(9 In Unit)	(9 In Unit)	(9 In Unit)	(9 In Unit)	(9 In Unit)	(9 In Unit)
Monitored	0	0	0	0	0	0
Leaks Detected	0	0	0	0	0	0
Leaks Not Repaired within 15 Days	0	0	0	0	0	0
AGITATOR	(3 In Unit)	(3 In Unit)	(3 In Unit)	(3 In Unit)	(3 In Unit)	(3 In Unit)
Monitored	3	3	3	3	3	3
Leaks Detected	0 (0.00%)	0 (0.00%)	0 (0.00%)	0 (0.00%)	0 (0.00%)	0 (0.00%)
Leaks Not Repaired within 15 Days	0	0	0	0	0	0

Report Period 07/01/2016 - 12/31/2016

Process Unit: PHENOLIC **Monitoring Program:** PHENOLIC

01/10/2017

SEMIANNUAL SUMMARY REPORT

LEAK REPORT

	July 2016	August 2016	September 2016	October 2016	November 2016	December 2016
CONNECTOR	(1199 In Unit)	(1199 In Unit)	(1199 In Unit)	(1199 In Unit)	(1199 In Unit)	(1199 In Unit)
Monitored	0	0	0	0	0	0
Leaks Detected	0	0	0	0	0	0
Leaks Not Repaired within 15 Days	0	0	0	0	0	0
OTHER	(5 In Unit)	(5 In Unit)	(5 In Unit)	(5 In Unit)	(5 In Unit)	(5 In Unit)
Monitored	0	0	0	0	0	0
Leaks Detected	0	0	0	0	0	0
Leaks Not Repaired within 15 Days	0	0	0	0	0	0
RELIEF	(7 In Unit)	(7 In Unit)	(7 In Unit)	(7 In Unit)	(7 In Unit)	(7 In Unit)
Monitored	5	0	0	5	0	0
Leaks Detected	0 (0.00%)	0	0	0 (0.00%)	0	0
Leaks Not Repaired within 15 Days	0	0	0	0	0	0

EQUIPMENT COUNTS	Beginning Count	Added	Removed	Ending Count
Valves	300	0	0	300
Pumps	9	0	0	9
AGITATOR	3	0	0	3
CONNECTOR	1199	0	0	1199
OTHER	5	0	0	5
RELIEF	7	0	0	7

Total Components Beginning of Reporting Period:	1523	**Total Components Added:**	0
Total Components End of Reporting Period:	1523	**Total Components Deleted:**	0
Total Components Monitored:	220	**Total Monitoring Events:**	452
Total Leaks:	0	**Total leaks not repaired within 15 days :**	0

Ashland Inc.
140 2nd & Paxton Avenue
Calumet City, IL 60409

Report Period 07/01/2016 - 12/31/2016

Process Unit: RCRA **Monitoring Program:** RCRA-BB

01/10/2017

SEMIANNUAL SUMMARY REPORT

LEAK REPORT

	July 2016	August 2016	September 2016	October 2016	November 2016	December 2016
Valves						
Leaks Detected	0	0	0	0	0	0
Leaks Not Repaired within 15 Days	0	0	0	0	0	0
Pumps						
Leaks Detected	0	0	0	0	0	0
Leaks Not Repaired within 15 Days	0	0	0	0	0	0

EQUIPMENT COUNTS	Beginning Count	Added	Removed	Ending Count
Valves	74	0	0	74
Pumps	2	0	0	2

EXHIBIT 405-3

11/28/16 Thermal Oxidizer Power Loss

Nov 2016 Production[1],

R201 = 91,797 lbs
R301 = 960,127 lbs
R501 = 1,411,405 lbs
TOTAL = 2,463,329 lbs

Nov Uncontrolled Emissions,

$$2{,}463{,}329\ lb * \frac{1.11E{-}6\ ton\ VOM}{lb} * \frac{2{,}000\ lb}{ton} = 5{,}469\ lb\ VOM$$

Minutes in November,

$$30\ days * \frac{24\ hr}{1\ day} * \frac{60\ min}{1\ hr} = 43{,}200\ min$$

Event Uncontrolled Emissions[2],

$$26\ \text{min} * \frac{5{,}469\ lb\ VOM}{43{,}200\ min} = 3.29\ lb$$

Maximum amount emitted during event: 3.29 lb VOM

1 Based upon monthly uncontrolled VOM emission data.
2 Total time that TO comb chanber was <1450°C (19:42 – 19:54 & 20:11 – 20:25)

Nicor Gas

Claudia Macholz
Mgr. Environmental Programs

1844 Ferry Road
Naperville, IL 60563
630-388-2456 tel
630-669-9361 cell
cmacholl@southernco.com

March 3, 2017

Illinois EPA, Bureau of Air
Compliance & Enforcement Section (MC40)
P.O. Box 19276
Springfield, Illinois 62794-9276

Illinois EPA, Bureau of Air
Permit Section (MC11)
P.O. Box 19506
Springfield, Illinois 62794-9506

Illinois EPA, Bureau of Air
Regional Office #3
2009 Mall Street
Collinsville, Illinois 62234

USEPA Region 5 – Air Branch
USEPA (AR-17J)
Air and Radiation Division
77 West Jackson Boulevard
Chicago, Illinois 60604

Re: Deviation Report
Nicor Gas – Ancona Station #70
2 Miles East Route 179 and 1-1/2 Miles South Route 17
Ancona, Illinois 61364
ID No. 105822AAD
Permit No. 95120024

RECEIVED
MAR 14 2017
AIR ENFORCEMENT BRANCH
U.S. EPA REGION 5

Dear Sir or Madam:

On behalf of Nicor Gas, please accept the attached report discussing a potential deviation associated with the control equipment on TEG Dehydration Units occurring during the month of February at the above-referenced location. The potential deviation is associated with Condition 4.2.2(c)(i)(A) of the facility's CAAPP Permit (*See*, Permit No. 95120024). The permit states in relevant part:

> *Pursuant to 35 IAC 215.301, no person shall cause or allow the discharge of more than 8 lbs/hr of organic material into the atmosphere from any emission source, except as provided in 35 IAC 215.302, 215.303, 215.304...*

35 IAC 215.302 states:

> *Emissions of organic material in excess of those permitted by Section 215.301 are allowable if such emissions are controlled by one of the following methods:*
>
> *a) Flame, thermal or catalytic incineration so as either to reduce such emissions to 10 ppm equivalent methane (molecular weight 16) or less, or to convert 85 percent of the hydrocarbons to carbon dioxide and water; or,*

b) A vapor recovery system which adsorbs and/or condenses at least 85 percent of the total uncontrolled organic material that would otherwise be emitted to the atmosphere; or,

c) Any other air pollution control equipment approved by the Agency capable of reducing by 85 percent or more the uncontrolled organic material that would be otherwise emitted to the atmosphere.

In compliance with these conditions and exemptions, the affected TEG Dehydration Units at the facility are equipped with a vapor combustor that reduces uncontrolled volatile organic matter (VOM) by at least 85%. Annual maintenance is completed prior to the start of the winter heating season before the units are put into operation. The pilots are checked and replaced, as necessary, during those maintenance activities. In an effort to prevent outages due to a corroded pilot, an additional pilot is stored on-site.

On February 12, 2017, the vapor combustor controlling emissions from TEG Dehydration Units (Reboilers) #9 and 10 (VV3-G and VV4-G, respectively) at Ancona went offline and an alarm was sounded. Immediately following the alarm, facility personnel performed a visual inspection of the vapor combustor and confirmed the unit experienced an outage. It was determined the outage was a result of the pilot being corroded to the point of malfunctioning. The outage was corrected by replacing the pilot. The vapor combustor was not operating for a period of 5 hours.

Calculations were performed using GRI-GLYCalc Version 4.0 to determine worst-case uncontrolled emissions from the TEG Dehydration Units during the timeframe when a potential deviation occurred (*See*, Exhibit 405-3). The calculations determined these emissions will not result in any compliance deviations associated with the facility's current permitted emission limits.

Should you have any questions regarding this matter, please feel free to contact Claudia Macholz at 630-388-2456.

Sincerely,

Claudia Macholz

Claudia Macholz
Manager Environmental Programs
Nicor Gas

Attachment

ILLINOIS ENVIRONMENTAL PROTECTION AGENCY
DIVISION OF AIR POLLUTION CONTROL -- PERMIT SECTION
P.O. BOX 19506
SPRINGFIELD, ILLINOIS 62794-9506

FOR APPLICANT'S USE
Revision #: _____
Date: ____ / ____ / ____
Page _____ of _____
Source Designation: _____

EXCESS EMISSIONS, MONITORING EQUIPMENT DOWNTIME, AND MISCELLANEOUS REPORTING FORM	FOR AGENCY USE ONLY
	ID NUMBER:
	PERMIT #:
	DATE:

THIS FORM IS TO BE USED TO REPORT THE FOLLOWING:

- EXCESS EMISSIONS. I.E., THE AMOUNT OF EMISSIONS EXCEEDS THAT OF AN EMISSION STANDARD, PERMIT LIMIT OR OTHER APPLICABLE REQUIREMENT
- DOWNTIME OF EMISSIONS MONITORING OR OTHER COMPLIANCE MONITORING EQUIPMENT IS NOT SPECIFIED IN THE PERMIT
- MISCELLANEOUS INCIDENTS OF POSSIBLE NONCOMPLIANCE TO AN APPLICABLE REQUIREMENT

SOURCE INFORMATION

1) SOURCE NAME: Nicor Gas - Ancona Station #70

2) DATE FORM PREPARED: 02/21/17

3) SOURCE ID NO. (IF KNOWN): 105822AAD

GENERAL INFORMATION

4) INDICATE WHICH OF THE FOLLOWING THIS FORM IS BEING USED TO REPORT:

☐ **EXCESS EMISSIONS**

☐ **DOWNTIME OF EMISSIONS MONITORING OR OTHER COMPLIANCE MONITORING EQUIPMENT NOT SPECIFIED IN THE PERMIT**

☒ **MISCELLANEOUS INCIDENT OF POSSIBLE NON COMPLIANCE**

5) PERIOD COVERED BY THIS REPORT:

FROM: 02 / 12 / 17 TO: 02 / 12 / 17

6) NAME AND PHONE NUMBER OF PERSON TO CONTACT FOR QUESTIONS REGARDING THIS REPORT:

NAME: Claudia Macholz TITLE: Manager Environmental Programs

PHONE#: (630) 388 - 2456 EXT: _____

THIS AGENCY IS AUTHORIZED TO REQUIRE THIS INFORMATION UNDER ILLINOIS REVISED STATUTES, 1991, AS AMENDED 1992, CHAPTER 111 1/2, PAR. 1039.5. DISCLOSURE OF THIS INFORMATION IS REQUIRED UNDER THAT SECTION. FAILURE TO DO SO MAY PREVENT THIS FORM FROM BEING PROCESSED AND COULD RESULT IN THE APPLICATION BEING DENIED. THIS FORM HAS BEEN APPROVED BY THE FORMS MANAGEMENT CENTER.

FOR APPLICANT'S USE
_____

APPLICATION PAGE _____

Printed on Recycled Paper
405-CAAPP

EXCESS EMISSIONS

7) IDENTIFY THE EMISSION UNIT(S) AND ASSOCIATED CONTROL EQUIPMENT WHICH EXCEEDED AN EMISSION STANDARD, PERMIT CONDITION LIMIT, OR OTHER APPLICABLE REQUIREMENT (IF ADDITIONAL SPACE IS NEEDED FOR THIS SECTION, ATTACH AND LABEL AS EXHIBIT 405-1):

8) IDENTIFY THE EMISSION STANDARD(S) OR LIMIT(S) THAT WAS EXCEEDED:

9a) PROVIDE THE TYPE(S) AND AMOUNT(S) OF EMISSIONS THAT OCCURRED DURING THE EXCEEDANCE IN UNITS IDENTICAL TO THAT OF EACH EMISSION STANDARD OR LIMIT THAT WAS EXCEEDED:

b) ATTACH THE CALCULATIONS, TO THE EXTENT THEY ARE AIR EMISSIONS RELATED, ON WHICH THESE EMISSIONS WERE BASED AND LABEL AS EXHIBIT 405-1.

10) DURATION OF EXCEEDANCE (E.G., 1 HOUR & 50 MINUTES):

11) DATE OF OCCURRENCE OF EXCEEDANCE: _____ / _____ / _____

12) DESCRIBE THE EXCEEDANCE INCIDENT, INCLUDING THE SUSPECTED OR KNOWN CAUSE OF THE EXCEEDANCE:

13) DESCRIBE CORRECTIVE ACTIONS TAKEN AT THE TIME OF THE EXCEEDANCE INCIDENT:

14) DESCRIBE SUBSEQUENT ACTIONS TAKEN TO PREVENT FUTURE EXCEEDANCES:

UNPERMITTED DOWNTIME OF MONITORING EQUIPMENT

15) IDENTIFY THE MONITORING EQUIPMENT WHICH WAS NONFUNCTIONAL, INCLUDING THE MONITORED PARAMETER AND THE EMISSION UNIT(S) AND/OR CONTROL EQUIPMENT BEING MONITORED:

16) DATE MONITOR WAS DOWN: _____ / _____ / _____

17) DURATION OF MONITOR DOWNTIME (E.G., 1 HOUR & 50 MINUTES):

18) DESCRIBE THE SUSPECTED OR KNOWN CAUSE OF THE MONITOR FAILURE:

19) DESCRIBE CORRECTIVE ACTIONS TAKEN AT THE TIME OF MONITOR FAILURE:

20) DESCRIBE SUBSEQUENT ACTIONS TAKEN TO PREVENT FUTURE FAILURES:

MISCELLANEOUS INCIDENT

21) DESCRIBE THE INCIDENT AND IDENTIFY THE EMISSION UNIT(S) AND CONTROL EQUIPMENT INVOLVED:
See, Cover Letter

22) PROVIDE THE RULE(S) OR PERMIT CONDITION(S) WHICH MAY HAVE BEEN VIOLATED (IF APPLICABLE):
35 IAC 215.301 and 35 IAC 215.302

23) DATE OF OCCURRENCE OF THE INCIDENT:
See, Cover Letter _____ / _____ / _____

24) DURATION OF THE INCIDENT (E.G., 1 HOUR & 50 MINUTES):
See, Cover Letter

25a) PROVIDE THE TYPE AND AMOUNT OF EMISSIONS THAT OCCURRED DURING THE INCIDENT IN UNITS IDENTICAL TO THAT OF EACH EMISSION STANDARD OR LIMIT (IF APPLICABLE):
Worst-case, uncontrolled VOM emissions associated with the potential devation were calculated using GRI-GLYCalc Version 4.0, included in Exhibit 405-3. The calculations determined that these emissions will not result in any compliance deviations associated with the facility's current permitted emission limits.

b) ATTACH THE CALCULATIONS, TO THE EXTENT THEY ARE AIR EMISSIONS RELATED, ON WHICH THESE EMISSIONS WERE BASED AND LABEL AS EXHIBIT 405-3.

26) DESCRIBE THE SUSPECTED OR KNOWN CAUSE OF THE INCIDENT:
See, Cover Letter

27) DESCRIBE CORRECTIVE ACTIONS TAKEN AT THE TIME OF THE INCIDENT:
See, Cover Letter

28) DESCRIBE SUBSEQUENT ACTIONS TAKEN TO PREVENT FUTURE INCIDENTS:
See, Cover Letter

29) PROVIDE ANY OTHER PERTINENT INFORMATION:

SIGNATURE BLOCK

NOTE: THIS CERTIFICATION MUST BE SIGNED BY A RESPONSIBLE OFFICIAL. APPLICATIONS WITHOUT A SIGNED CERTIFICATION WILL BE RETURNED AS INCOMPLETE.

30) I CERTIFY UNDER PENALTY OF LAW THAT, BASED ON INFORMATION AND BELIEF FORMED AFTER REASONABLE INQUIRY, THE STATEMENTS AND INFORMATION CONTAINED IN THIS APPLICATION ARE TRUE, ACCURATE AND COMPLETE.

AUTHORIZED SIGNATURE:

BY: _____ AUTHORIZED SIGNATURE

VP, Storage and Peaking Operations
TITLE OF SIGNATORY

Stephen L. Wassell
TYPED OR PRINTED NAME OF SIGNATORY

3 / 02 / 2017
DATE

APPLICATION PAGE _____

Printed on Recycled Paper
405-CAAPP

GRI-GLYCalc VERSION 4.0 - EMISSIONS SUMMARY

Case Name: Ancona VV3-G

CONTROLLED REGENERATOR EMISSIONS

Component	lbs/hr	lbs/day	tons/yr
Hydrogen Sulfide	0.0048	0.115	0.0210
Methane	1.6385	39.323	7.1764
Ethane	0.1622	3.894	0.7106
Propane	0.0505	1.212	0.2212
n-Butane	0.0326	0.782	0.1427
n-Pentane	0.0178	0.428	0.0780
n-Hexane	0.0068	0.162	0.0296
Other Hexanes	0.0078	0.186	0.0340
Heptanes	0.0063	0.152	0.0278
2,2,4-Trimethylpentane	0.0006	0.015	0.0028
Benzene	0.0471	1.131	0.2063
Toluene	0.0924	2.218	0.4049
C8+ Heavies	0.0130	0.312	0.0569
Total Emissions	2.0804	49.930	9.1122
Total Hydrocarbon Emissions	2.0756	49.815	9.0912
Total VOC Emissions	0.2749	6.598	1.2041
Total HAP Emissions	0.1469	3.527	0.6436
Total BTEX Emissions	0.1395	3.349	0.6112

UNCONTROLLED REGENERATOR EMISSIONS

Component	lbs/hr	lbs/day	tons/yr
Hydrogen Sulfide	0.0958	2.299	0.4195
Methane	32.7692	786.460	143.5289
Ethane	3.2449	77.877	14.2126
Propane	1.0100	24.239	4.4237
n-Butane	0.6516	15.639	2.8542
n-Pentane	0.3563	8.551	1.5605
n-Hexane	0.1354	3.249	0.5930
Other Hexanes	0.1552	3.724	0.6796
Heptanes	0.1268	3.042	0.5552
2,2,4-Trimethylpentane	0.0126	0.303	0.0553
Benzene	0.9421	22.610	4.1264
Toluene	1.8487	44.368	8.0971
C8+ Heavies	0.2598	6.235	1.1378
Total Emissions	41.6082	998.596	182.2437
Total Hydrocarbon Emissions	41.5124	996.297	181.8242
Total VOC Emissions	5.4984	131.961	24.0828
Total HAP Emissions	2.9388	70.530	12.8718
Total BTEX Emissions	2.7908	66.978	12.2235

GRI-GLYCalc VERSION 4.0 - EMISSIONS SUMMARY

Case Name: Ancona VV4-G

CONTROLLED REGENERATOR EMISSIONS

Component	lbs/hr	lbs/day	tons/yr
Hydrogen Sulfide	0.0048	0.115	0.0210
Methane	1.6385	39.323	7.1764
Ethane	0.1622	3.894	0.7106
Propane	0.0505	1.212	0.2212
n-Butane	0.0326	0.782	0.1427
n-Pentane	0.0178	0.428	0.0780
n-Hexane	0.0068	0.162	0.0296
Other Hexanes	0.0078	0.186	0.0340
Heptanes	0.0063	0.152	0.0278
2,2,4-Trimethylpentane	0.0006	0.015	0.0028
Benzene	0.0471	1.131	0.2063
Toluene	0.0924	2.218	0.4049
C8+ Heavies	0.0130	0.312	0.0569
Total Emissions	2.0804	49.930	9.1122
Total Hydrocarbon Emissions	2.0756	49.815	9.0912
Total VOC Emissions	0.2749	6.598	1.2041
Total HAP Emissions	0.1469	3.527	0.6436
Total BTEX Emissions	0.1395	3.349	0.6112

UNCONTROLLED REGENERATOR EMISSIONS

Component	lbs/hr	lbs/day	tons/yr
Hydrogen Sulfide	0.0958	2.299	0.4195
Methane	32.7692	786.460	143.5289
Ethane	3.2449	77.877	14.2126
Propane	1.0100	24.239	4.4237
n-Butane	0.6516	15.639	2.8542
n-Pentane	0.3563	8.551	1.5605
n-Hexane	0.1354	3.249	0.5930
Other Hexanes	0.1552	3.724	0.6796
Heptanes	0.1268	3.042	0.5552
2,2,4-Trimethylpentane	0.0126	0.303	0.0553
Benzene	0.9421	22.610	4.1264
Toluene	1.8487	44.368	8.0971
C8+ Heavies	0.2598	6.235	1.1378
Total Emissions	41.6082	998.596	182.2437
Total Hydrocarbon Emissions	41.5124	996.297	181.8242
Total VOC Emissions	5.4984	131.961	24.0828
Total HAP Emissions	2.9388	70.530	12.8718
Total BTEX Emissions	2.7908	66.978	12.2235

JOHN DEERE

John Deere Seeding and Cylinder
909 River Dr., Moline, IL 61265 USA
Phone: 309-765-7470 Fax: 309-765-7433
E-mail: TrumbullTimothyD@JohnDeere.com

March 9, 2017

RECEIVED
MAR 13 2017
AIR ENFORCEMENT BRANCH
U.S. EPA REGION 5

Environmental Protection Agency
Division of Air
77 West Jackson Boulevard
Chicago, Illinois 60604-3507

RE: John Deere Cylinder
Ongoing compliance status report for Chrome Plating Line- C49
(SAP# 107400)

To Whom it May Concern:

The purpose of this letter is to summarize the compliance status of the hard chromium electroplating line, C49, located at John Deere Cylinder in Moline, Illinois for September 6, 2016 through March 5, 2017 reporting period. This ongoing compliance status report is required per 40 CFR 63.347(g).

The following information is required in this ongoing compliance status report per 40 CFR 63.347(g)(3):

1. *The company name and address of the affected source.*

   John Deere Cylinder
   909 River Drive
   Moline, IL 61265

2. *An identification of the operating parameter that is monitored for compliance determination, as required by 40 CFR 63.343(c).*

   The air pollution control technique for C49 consists of a 3-stage composite mesh pad (CMP). The site-specific operating parameter for the CMP system is the pressure drop (an average of the 3 stages) across the CMP per 40 CFR 63.343(c)(3).

3. *The relevant emission limitation for the affected source, and the operating parameter value, or range of values, that correspond to compliance with the emission limitation as specified in the notification of compliance status required by paragraph (e) of this section.*

   The applicable emission limitation and range of compliant operating parameter for C49 is presented in Table1.

TABLE 1. APPLICABLE EMISSION LIMITATION AND COMPLIANT OPERATING PARAMETERS FOR THE AFFECTED SOURCES

Source No.	Applicable Chromium Emission Limitation	Compliant Pressure Drop Across the CMP System (inches H_20)*
C49	0.011 mg/dscm 40 CFR 63.342(c)(1)(i)	0.0-4.0

*Based on the compliance testing average, ±2 inches.

4. *The beginning and ending dates of the reporting period.*

   The reporting period began September 6, 2016 and ended March 5, 2017.

5. *A description of the type of process performed in the affected source.*

   C49 is utilized for hard chromium electroplating.

6. *The total operating time of the affected source during the reporting period.*

   The total operating time from September 6, 2016 and ended March 5, 2017 was 2148 hours.

7. *If the affected source is a hard chromium electroplating tank and the owner or operator is limiting the maximum cumulative rectifier capacity in accordance with 40 CFR 63.342(c)(2), the actual cumulative rectifier capacity expended the reporting period, on a month-by-month basis.*

   Deere is not limiting maximum cumulative rectifier capacity on C49.

8. *A summary of operating parameter values, including the total duration of excess emissions during the reporting period as indicated by those values, the total duration of excess emissions expressed as a percent of the total source operating time during that reporting period, and a breakdown of the total duration of excess emissions during the reporting period into those that are due to process upsets, control equipment malfunctions, other known causes and unknown causes.*

   There have been no recorded exceedances of the monitored parameters for C49 during this reporting period. The 3-stage pressure drop readings varied from 0.71 to 1.97 inches H_20, which is within the compliant pressure drop range outlined in Table 1 above.

9. *A certification by a responsible official, as defined in 40 CFR 63.2, that the work practice standards in 40 CFR 63.342(f) were followed in accordance with the operation and maintenance plan for the source.*

   The work practice standards in 40 CFR 63.342(f) were followed in accordance with the operation and maintenance plan for the source. See item 12 for certification.

10. *If the operation and maintenance plan required by 40 CFR 63.342(f)(3) was not followed, an explanation of the reasons for not following the provisions, as an assessment of whether any excess emissions and/or parameter monitoring exceedances are believed to have occurred, and a copy of the report(s) required by 40 CFR 63.342(f)(iv) documenting that the operation and maintenance plan was not followed.*

    Deere's operation and maintenance plan incorporates the requirement, independent of any malfunctions or exceedances, to maintain records on a daily basis per 40 CFR 63.343(c)(1)(ii). The operations and maintenance plan was followed during the reporting period.

11. *A description of any changes in monitoring, processes, or controls since the last reporting period.*

    There have been no changes in the monitoring, processes, or controls since the last reporting period.

12. *The name, title, and signature of the responsible official who is certifying the accuracy of the report.*

Name of Environmental Coordinator:	Timothy D. Trumbull
Signature of Environmental Coordinator:	
Date:	3/9/17

Name of Responsible Official:	Aric Halloran
Title of Responsible Official:	John Deere Cylinder Factory Manager
Signature of Responsible Official:	
Date:	9 Mar 17

13. *The date of the report.*

March 9, 2017

Please contact me at (309) 765-7470 with any questions regarding this ongoing compliance status report.

Sincerely,

Tim Trumbull
Environmental Manager
JOHN DEERE CYLINDER

Cc: Illinois Environmental Protection Agency
Division of Air Pollution Control
5415 North University
Peoria, Illinois 61614

Mr. Ray Pilapil
Compliance Section Manager
Illinois Environmental Protection Agency
Division of Air Pollution Control
1021 North Grand Avenue East
P.O. Box 19276
Springfield, Illinois 62794-9276

(217) 662-2136
Fax (217) 662-2268
P.O. Box 19
Maple Grove Road
Georgetown, IL 61846

, 2017

V
r and Radiation Division
kson Blvd.
60604–3507

RECEIVED
MAR 8 2017
AIR ENFORCEMENT BRANCH
U.S. EPA REGION 5

aChem, Inc.
ple Grove Rd.
orgetown, IL 61846
#183806AAB
N NESHAP Semi-Annual Compliance Report

ce with 40 CFR 63.2520 we are submitting our semi-annual Miscellaneous Organic NESHAP
i-annual compliance report. This report covers the period from July 1, 2016 to December 31,

520 (e)(4)
shutdown, malfunction (SSM) occurred resulting in excess emissions during the reporting

520 (e)(5)
ns resulting in excess emissions; however, the following monitoring deviations have occurred.

Monitoring Parameters
o 40 CFR 63.2520(c)(1), DynaChem prepared an Alternative Monitoring Request (AMR), by
mended Pre-compliance report, to set operating limits for parameters other than those
§§63.2455 through 63.2485. The pre-compliance report requested alternative monitoring
with regards to DynaChem's packed-bed caustic scrubber used to control phenol emission
ser/carbon canister treatment trains used to control emissions containing toluene,
drin, benzene, and xylene from Group 1 batch process vent streams. The U.S. EPA – Region V
ie AMR on August 4, 2008, in which the following monitoring requirements were required:

Caustic Scrubber
addendum dated November 11, 2009 was submitted by Environ in behalf of DynaChem, Inc.
erve as a notification of process changes as required under 40 CFR 63.2520(e)(10) and
udes the following information:

(a) The initial performance test conducted on September 12, 2008 was inconclusive due to the low hazardous air pollutant (HAP) concentration at the inlet to the batch vent

control system. A second source test conducted for this MCPU batch process vent stream on July 30, 2009 also confirmed that the pre-control HAP concentrations in the batch vent stream are below 50 parts per million by volume (ppmv). Therefore, the batch vents from the Epoxy Plant MCPU (Resin Operating Scenario) do not meet the MON definition of "batch process vent" at 63.2550. As a result, DynaChem provided notification that emission controls are not required and will not be operated for this operating scenario at the Epoxy Plant MCPU on November 11, 2009.

Condenser/Carbon Adsorber Train

2. An addendum dated November 11, 2009 was submitted by Environ in behalf of DynaChem, Inc. to serve as a notification of process changes as required under 40 CFR 63.2520(e)(10) and includes the following information:
   (a) Continuously monitor condenser exit (product side) temperature to meet operating limits for the condenser during the performance test. Average temperatures identified during the performance tests on July 30, 2009 are as follows:

   Acid Plant MCPU – Sulfonic Acid Operating Scenario:
   44.3°F (benzene and toluene)

   (b) No additional changes to the Epoxy Plant MCPU Epoxy Operating Scenario were changed for refrigerated condenser operating temperatures. The average temperatures required during the stripping process are:

   Epoxy Plant MCPU –Epoxy Operating Scenario:
   58.0°F (toluene)
   56.1°F (epichlorohydrin)

3. Monitor total hydrocarbon concentration with a portable Flame-ionization Detector (FID) in the two carbon canister series at the following locations: (a) inlet of the lead carbon canister; (b) outlet of the lead carbon canister; (c) outlet of the lag carbon canister; in order to detect breakthrough. Monitoring will be conducted every three operating days.

4. Carbon canister replacement will be triggered by either of the following:
   (a) the VOC concentration at the outlet of the lead carbon canister is greater than or equal to 90 % of the concentration at the inlet.
   (b) the VOC concentration at the outlet of the lag carbon canister is greater than or equal to 5% of the concentration at the inlet of the lead canister.

Epoxy Plant MCPU - Epoxy Operating Scenario - Condenser Exit Temperature
No operating deviations were identified in the Epoxy Plant MCPU – Epoxy Operating Scenario with regards to the condenser exit (product side) temperature operating limits.

Epoxy Plant MCPU - Epoxy Operating Scenario – Carbon Canisters
No emission or operating deviations were identified during carbon canisters monitoring via the FID monitoring.

Carbon canisters dedicated to toluene were changed out during the following dates:

> **NOTE:** *Epoxy production has been halted between April 20, 2016 through December 12, 2016. Major plant construction project in the area has prevented our ability to manufacture epoxy and purchased the finish product during the construction period. Construction activity did not occur on the MON production equipment. Epoxy production resumed on December 12, 2016.*

Carbon canisters dedicated to Epichlorohydrin were changed out during the following dates:

> **NOTE:** *Epoxy production has been halted between April 20, 2016 through December 12, 2016. Major plant construction project in the area has prevented our ability to manufacture epoxy and purchased the finish product during the construction period. Construction activity did not occur on the MON production equipment. Epoxy production resumed on December 12, 2016.*

Acid Plant MCPU – Sulfonic Acids - Condenser Exit Temperature

An addendum dated November 11, 2009 was submitted by Environ in behalf of DynaChem, Inc. to serve as a notification of process changes as required under 40 CFR 63.2520(e)(10) and includes the following information:

(c) Continuously monitor condenser exit (product side) temperature to meet operating limits for the condenser during the performance test. Average temperatures identified during the performance tests on July 30, 2009 are as follows:

Acid Plant MCPU – Sulfonic Acid Operating Scenario:
44.3°F (benzene and toluene)

No emission or operating deviations were identified during the measurement of the condenser exit (product side) temperatures

Acid Plant MCPU – Sulfonic Acids – Carbon Canisters

No emission or operating deviations were identified during carbon canisters monitoring via the FID monitoring.

Carbon canisters dedicated to toluene emissions were changed out during the following dates:
September 26, 2016
October 26, 2016

Carbon canisters dedicated to benzene emissions were changed out during the following dates:
November 17, 2016

40 CFR 63.2520 (e)(6)

Not Applicable - DynaChem, Inc. does not use a continuous emission monitors (CEMS).

40 CFR 63.2520 (e)(7)

No new operating scenarios exist during this reporting period.

40 CFR 63.2520 (e)(8)

No process units have been added to a Process Unit Group (PUG).

40 CFR 63.2520 (e)(9)
Subparts F, G, H, SS, UU, WW, and GGG of 40 CFR 63 and subpart F of 40 CFR part 65 are not applicable.

40 CFR 63.2520 (e)(10)
No process changes, changes to the information contained in the pre-compliance report, change in status of a control device, or change from Group 2 to Group1 status have occurred between July 1, 2015 and December 31, 2015

Please find attached a summary of LDAR monitoring, carbon canister breakthrough monitoring, and MCPU shutdowns for the reporting period. If you have any questions or need further information, feel free to contact me at (217) 662-2136.

Sincerely,

Craig A. McCall
President

cc: Mr. John Justice, P.E., Regional Manager, Field Operations Section, Division of Air Pollution, IEPA
Ray Pilapil, IEPA Bureau of Air Compliance Section

The following summarizes our monitoring of the Acid Production MCPU for MON LDAR this reporting period.
July 2016
Monitoring with PID MiniRae 3000 by Phil and Damon on July 26 - 28, 2016.

7/26	7/27	7/28
R-1 6510LS #62864	R-1 6510LS #62864	R-1 6510 #62873
R-2 6510LS #62865	R-2 6510LS #62865	R-1 6510 #662874
R-3 6110 #62862	R-3 6110 #62862	R-1 TX6535 #62871
R-4 Not in service	R-4 Not yet service	R-4 Not in service

The monitoring results were as follows:
Background reading on 7/26 was 10.0 PPM, on 7/27 it was 2.1 PPM, and on 7/28 it was 1.3 PPM.
2 Leaks were detected and then repaired as follows:
A-5 solvent pump seal was fixed on 7/26 and was tested OK on 7/28.
V-55 valve was fixed on 8/1 and was tested OK on 8/1.

Equipment	Number monitored	Number leaking	Percent leaking
Valves	322	1	0.34%
Pumps	12	1	8.3%
Agitators	4	0	0
Connectors	226	0	0

Weekly Pump and Agitator visual inspections were also done on 7/6, 7/13, 7/20, and 7/27.
Toluene absorption bed was monitored 6 times and the highest reading from the exhaust was 43.7 PPM on 7/27, this was 0.29% of the inlet.
Benzene absorption bed was monitored 2 time and the reading from the exhaust was 99.1 PPM on 7/21, this was 0.66% of the inlet.
Carbon Beds were not changed out this month.

Process unit shut downs

R1		R2		R3	
From	To	From	To	From	To
Date	Date	Date	Date	Date	Date
7/7	7/11	7/1	7/5	7/1	7/5
7/17	7/25	7/14	7/25	7/14	7/19
-	-	-	-	-	-
-	-	-	-	-	-

August 2016
Monitoring with PID MiniRae 3000 was on 8/26, 8/29, and 8/30.

8/26	8/ 29	8/30
R-1 6510W60 #62973	R-1 6510W60 #62973	R-1 6510W60 #62973
R-2 Empty	R-2 6510 #62978	R-2 Empty
R-3 Empty	R-3 Empty	R-3 Empty
R-4 Not in service	R-4 Not in service	R-4 Not in service

The monitoring results were as follows:
Background reading on 8/26 was 1.4 PPM, 8/29 was 3.2 PPM, and 8/30 was 12.4 PPM.
1 Leak was detected and addressed as follows:
A-2 Seal was reset on 8/31 and was tested OK on 9/1.

Special Note R-4 and all associated systems were put into temporary service on 8/3. A trial batch of 6510 # 61266 was started at 0920 on that day. That batch finished and was stripped through CB-3 and CB-4 on 8/4. This 1st

attempt to put R-4 into active service failed due to internal glass failure. The Reactor was therefore immediately removed from service and remains out of service until re-glassing the unit is complete.

Equipment	Number monitored	Number leaking	Percent leaking
Valves	322	0	0
Pumps	12	1	8.3
Agitators	4	0	0
Connectors	226	0	0

Weekly Pump and Agitator visual inspections were also done on 8/3, 8/10, 8/17, and 8/24. No visible leaks were observed.
Toluene absorption bed was monitored 7 times and the highest reading from exhaust was 71.2 PPM on 8/30, this was 2.87% of the inlet.
Benzene absorption bed was monitored 1 time and the reading from the exhaust was 66 PPM on 8/4, this was 0.50% of the inlet.

Process unit shut downs

R1		R2		R3	
From	To	From	To	From	To
Date	Date	Date	Date	Date	Date
8/2	8/15	8/8	8/15	8/4	8/15
8/18	8/22	8/17	8/22	8/16	8/23
8/25	8/31	8/24	8/29	8/25	8/31
-	-	8/30	8/31	-	-

September 2016
Monitoring with PID MiniRae 3000 was done September 22, 23, and 26.

9/22	9/23	9/26
R-1 Empty	R-1 6510 #63067	R-1 6510 #63067
R-2 6510 #63069	R-2 6510 #63069	R-2 6510 #63069
R-3 Empty	R-3 Empty	R-3 6730 #63073
R-4 Not yet in service	R-4 Not yet in service	R-4 Not yet in service

The monitoring results were as follows:
Background reading was 13.4 PPM (inside) on 9/22, 2.1 PPM (outside) on 9/23, and 4.8 PPM (outside) on 9/26
No leaks were detected

Equipment	Number monitored	Number leaking	Percent leaking
Valves	322	0	0
Pumps	12	0	0
Agitators	4	0	0
Connectors	226	0	0

Weekly Pump and Agitator visual inspections were also done on 9/8, 9/14, 9/21, 9/28. No visible leaks were observed.
Toluene absorption bed was monitored 5 times and the highest reading from exhaust was 535 PPM on 9/27 this was 20.3% of the inlet.
Benzene absorption bed was monitored 2 times and the reading from the exhaust was 42.3 PPM on 9/28, this was 0.31% of the inlet.

Toluene carbon bed was changed on 9/27. CB-3 (00697W) was removed as spent. CB-4 (05884W) was moved to CB-3 and a new carbon bed CB-4 (081084W) and labeled as CB-4.

Process unit shut downs

R1		R2		R3	
From	To	From	To	From	To
Date	Date	Date	Date	Date	Date
9/15	9/26	9/1	9/6	9/1	9/7
9/29	9/30	9/13	9/19	9/12	9/15
-	-	9/20	9/26	9/21	9/27
-	-	9/29	9/30	9/29	9/30

October 2016

Monitoring with PID MiniRae 3000 was done October 26, 27, 28, and 31.

10/26	10/27	10/28	10/31
R-1 6510LS #63160	R-1 6510LS #63195	R-1 6510 #63188	R-1 6510 #63188
R-2 6510 #63162	R-2 6510 #63182	R-2 6510 #63182	R-2 6800W65 #63197
R-3 6110 #63175	R-3 6730 #63193	R-3 6730 #63193	R-3 6730 #63193
R-4 Out of service	R-4 Out of service	R-4 Out of service	R-4 Out of service

The monitoring results were as follows:

Background reading was 3.2 PPM on 10/26, 2.5 PPM on 10/27, 1.9 PPM on 10/28 all outside, and 16.2 PPM (inside) on 10/31.

1 leak was detected and addressed as follows:

Three camlock plugs were missing and replaced (CAM-12, CAM-45, CAM-65).

A-7 (R-1 solvent pump) leaking at seal on 10/31 installed new seal on 11/3 and retested on 11/4.

Equipment	Number monitored	Number leaking	Percent leaking
Valves	322	0	0
Pumps	12	1	8.33%
Agitators	4	0	0
Connectors	226	0	0

Weekly Pump and Agitator visual inspections were also done on 10/5, 10/13, 10/19, and 10/26. No visible leaks were observed.

Toluene absorption bed was monitored 9 times and the highest reading from exhaust was 7.9 PPM on 10/4, this was 0.32% of the inlet.

Benzene absorption bed was not monitored.

Toluene carbon bed was changed on 10/27. CB-3 (05884W) was removed as spent, CB-4 (081084W) was moved into the place of CB-3 and relabeled. A new column (081082W) was moved into the place of CB-4.

Process unit shut downs

R1		R2		R3	
From	To	From	To	From	To
Date	Date	Date	Date	Date	Date
10/1	10/3	10/1	10/3	10/1	10/11
10/6	10/10	10/5	10/10	10/14	10/18
10/20	10/24	10/20	10/24	-	-
10/24	10/30	10/26	10/31	-	-

November 2016
Monitoring with PID – MiniRae 3000 was on November 15, 16, 17, and 22.
Monitoring with FID – TVA-1000B was on 11/23 by Phil and Damon.

11/15	11/16	11/17	11/22
R-1 6510 #63251	R-1 6510 #63251	R-1 6510 #63272	R-1 6510 #63274
R-2 6800W65 #63253	R-2 6800W65 #63253	R-2 6510 #63298	R-2 6510LS #63297
R-3 6730 #63249	R-3 6730 #63249	R-3 6730 #63295	R-3 6730 #63295
R-4 Not in service	R-4 Not in service	R-4 Not in service	R-4 Not in service

The monitoring results were as follows:
Background reading were 6.5 PPM (outside) 11/15, 1.5 PPM (outside) 11/16, 9.1 PPM (inside) 11/17, and 0.3 PPM (outside) 11/22.
1 leak was detected and addressed as follows:
11/22 valve (V-30) was leaking on storage tank; tightened packing and tested OK on 11/22.

Equipment	Number monitored	Number leaking	Percent leaking
Valves	322	1	0.31
Pumps	12	0	0
Agitators	4	0	0
Connectors	226	0	0

Weekly Pump and Agitator visual inspections were also done on 11/2, 11/9, and 11/16.
No visible leaks were observed.
Toluene absorption bed was monitored 6 times and the highest reading from exhaust was 14.5 PPM on 11/10, this was 0.24% of the inlet.
Benzene absorption bed was monitored 3 times and the reading from exhaust was 1376 PPM on 11/16, this was 9.17% of the inlet.
Benzene carbon bed was changed on 11/17. CB-5 (081083W) was removed as spent, CB-6 (081080W) was moved into the place of CB-5 and relabeled CB-5. A new column (00697W) was moved into place of CB-6.

Process unit shut downs

R1		R2		R3	
From	To	From	To	From	To
Date	Date	Date	Date	Date	Date
11/18	11/21	11/15	11/21	11/4	11/7
11/23	11/28	-	-	11/10	11/14
-	-	-	-	11/18	11/21
-	-	-	-	11/23	11/28

December 2016

Monitoring with PID MiniRae 3000 was done December 16, 19, and 20th.

12/16	12/19	12/20
R-1 6510 #63401	R-1 6510 #63401	R-1 6510 #63418
R-2 6510 #63420	R-2 6510 #63420	R-2 6510 #63425
R-3 6730 #63422	R-3 6730 #63422	R-3 6730 #63422
R-4 Not in service	R-4 Not in service	R-4 Not in service

The monitoring results were as follows:

Background reading was 4.2 PPM (outside) 12/16, 8.1 PPM (inside) 12/19, and 3.8 PPM (outside) 12/20.

No leaks were detected and addressed as follows:

Equipment	Number monitored	Number leaking	Percent leaking
Valves	322	0	0
Pumps	12	0	0
Agitators	4	0	0
Connectors	226	0	0

Weekly Pump and Agitator visual inspections were also done on 12/1, 12/7, 12/14, 12/20, and 12/28.

No visible leaks were observed.

Toluene absorption bed was monitored 9 times and the highest reading from exhaust was 74.3 PPM on 12/9, this was 2.2% of the inlet.

Benzene absorption bed was monitored 1 time and the highest reading from exhaust was 1.7 PPM on 12/12, this was 0.8% of the inlet.

No Carbon Beds were changed this month.

Process unit shut downs

R1		R2		R3	
From	To	From	To	From	To
Date	Date	Date	Date	Date	Date
12/7	12/12	12/9	12/12	12/2	12/9
12/16	12/19	12/29	12/31	12/13	12/21
12/23	12/27	-	-	12/23	12/27

The following summarizes our monitoring of the Epoxy Production MCPU for MON LDAR this reporting period.

> **NOTE:** *Epoxy production has been halted between April 20, 2016 through December 12, 2016. Major plant construction project in the area has prevented our ability to manufacture epoxy and purchased the finish product during the construction period. Construction activity did not occur on the MON production equipment. All equipment was monitored with the PID regardless of production. Epoxy production resumed on December 12, 2016.*

July 2016

Monitoring with PID – in the Epoxy plant was done on July 21, 22, and 25th.

7/21	7/22	7/25
Epi S – Empty	Epi S – EP-560 #62857	Epi S – Empty
Wash V – Empty	Wash V – Coron	Wash V – 50% Formaldehyde
6000 – EP-560 #62844	6000 – EP-560 #62844	6000 – EP-560 #62859
9500 – Empty	9500 – empty	9500 – empty

The monitoring results were as follows:

The highest background reading of 4.8 PPM on 7/21, 6.1 PPM on 7/22, and 4.2 PPM on 7/25.

0 Leaks were found and addressed as follows:

Equipment	Number monitored	Number leaking	Percent leaking
Valves	427	0	0
Pumps	16	0	0
Agitators	5	0	0
Connectors	358	0	0

Weekly Pump and Agitator visual inspections were done on 7/6, 7/13, 7/20, and 7/27.

No leaks were observed.

No Carbon Beds were changed this month. Carbon beds were not monitored due to the halt of epoxy production.

Process unit shut downs

Epi Still		Wash Vessel		6000 Reactor		9500 Reactor	
From	To	From	To	From	To	From	To
Date	Date	Date	Date	Date	Date	Date	Date
7/1	7/5	7/1	7/31	-	-	7/1	7/31
7/21	7/25	-	-	-	-	-	-

August 2016

Monitoring with PID MiniRae 3000 in the Epoxy plant was done August 24, 25, and 30th.

8/24	8/25	8/30
Epi S – 2165LB3 #62961	Epi S – 2165LB3 #62961	EPI Still – 2165 #62976
Wash V – 2775 #62914	Wash V – 2775 #62914	Wash V – 2775 #62914
6000 – EP-560 #62930	6000 – EP-560 #62930	6000 – EP-560 #62957
9500 – Phenol	9500 – Phenol	9500 – Empty

The monitoring results were as follows:

The background reading was 3.5 PPM on 8/24, 6.2 PPM on 8/25, and 3.2 on 8/30.

1 Leak was detected and addressed as follows:

On 8/30 valve (V-1017) was leaking on storage tank; product was transferred to the wash vessel; maintenance replaced the nipple, valving, and camlock and tested OK on 9/9. (NOTE: 9/3 to 9/5 holiday and had to clean out receiving vessel prior to fixing valve on tank)

Equipment	Number monitored	Number leaking	Percent leaking
Valves	427	1	0.23%
Pumps	16	0	0
Agitators	5	0	0
Connectors	358	0	0

Weekly Pump and Agitator visual inspections were done on 8/3, 8/10, 8/17, and 8/24. No visible leaks were observed.
No Carbon Beds were changed this month. Carbon beds were not monitored due to the halt of epoxy production.

Process unit shut downs

Epi Still		Wash Vessel		6000 Reactor		9500 Reactor	
From	To	From	To	From	To	From	To
Date	Date	Date	Date	Date	Date	Date	Date
8/5	8/10	8/1	8/31	-	-	8/1	8/31
8/19	8/21	-	-	-	-	-	-

September 2016
Monitoring with PID MiniRae 3000 in the Epoxy plant was done September 19, 20, and 21st.

9/19	9/20	9/21
Epi S – Empty	Epi S – Empty	Epi S – Empty
Wash V – Empty	Wash V – Empty	Wash V – Empty
6000 – EP-560 #63037	6000 – EP-560 #63037	6000 – EP-560 #63044
New 6000 – Not in Service	New 6000 – Not in Service	New 6000 – Not in Service
9500 – Empty	9500 – Empty	9500 – Empty

The monitoring results were as follows:
Background reading was 3.2 PPM on 9/19, 1.1 PPM on 9/20, and 4.2 PPM on 9/21

Equipment	Number monitored	Number leaking	Percent leaking
Valves	427	0	0
Pumps	16	1	6.25%
Agitators	5	0	0
Connectors	358	0	0

Weekly Pump and Agitator visual inspections were done on 9/8, 9/14, 9/21, and 9/28. No leaks were observed.
No Carbon Beds were changed this month. Carbon beds were not monitored due to the halt of epoxy production.

Process unit shut downs

Epi Still		Wash Vessel		6000 Reactor		9500 Reactor	
From	To	From	To	From	To	From	To
Date	Date	Date	Date	Date	Date	Date	Date
9/16	9/24	9/1	9/30	-	-	9/1	9/30
9/30	9/30	-	-	-	-		

October 2016

Monitoring with PID MiniRae 3000 in the Epoxy Plant was done October 17, 18, 19, and 20th.

10/17	10/18	10/19
Epi S – 2870 #63157	Epi S – 28701 #63158	Epi Still – 28701 #63158
Wash V – 3000	Wash V – 3000	Wash V – 3000
6000 – EP-560 #63148	6000 – EP-560 #63159	6000 – EP-560 #63159
New 6000 – EP-560 #63159	New 6000 – Formaldehyde	New 6000 - Formaldehyde
9500 – Empty	9500 – Empty	9500 – Empty

10/20
Epi S – 28701 #63158
Wash V – 3000
6000 – EP-560 #63159
New 6000 - Formaldehyde
9500 – Empty

The monitoring results were as follows:
Background reading of 4.5 PPM on 10/17, 8.1 PPM on 10/18, 5.1 PPM on 10/19, and 5.1 PPM on 10/20.
No Leaks were detected

A new 6000 gallon reactor system including reactor, receiver, primary condenser, separator, post condensers, and vacuum system was installed and made operational in October 2016. All drawings and equipment lists were updated as well. 412 new parts were added. The list includes:

361 Flanges and Misc connections (RTDs, bursting disk, etc)
91 Valves
4 pumps
1 agitator

Equipment	Number monitored	Number leaking	Percent leaking
Valves	518	0	0
Pumps	20	0	0
Agitators	6	0	0
Connectors	674	0	0

Weekly Pump and Agitator visual inspections were also done on 10/5, 10/13, 10/19 and 10/26. No leaks were observed.
No Carbon Beds were changed this month. Carbon beds were not monitored due to the halt of epoxy production.

Process unit shut downs

Epi Still		Wash Vessel		6000 Reactor		9500 Reactor	
From	To	From	To	From	To	From	To
Date	Date	Date	Date	Date	Date	Date	Date
10/1	10/7	10/1	10/17	-	-	10/1	10/31
10/11	10/17	10/24	10/31	-	-	-	-

New 6000	
From	To
Date	Date
10/14	10/24
-	-

November 2016
Monitoring with PID MiniRae3000 in the Epoxy Plant was done November 15, 21, 22, and 23rd.

11/15
Epi S – Coron #63283
Wash V – Empty
6000 – EP-560 #63235
New 6000 – 2165LB3 #63258
9500 – Empty

11/21
Epi S – Coron #63310
Wash V – EP-560 #63312
6000 – EP-560 #63287
New 6000 – 2870 #63311
9500 – Empty

11/22
Epi Still – Coron #63315
Wash V – EP-560 #63312
6000 – EP-560 #63287
New 6000 – 2870 #63311
9500 – Empty

11/23
Epi S – Coron #63315
Wash V – EP-560 #63312
6000 – EP-560 #63287
New 6000 – 2870 #63311
9500 – Empty

The monitoring results were as follows:
Background reading was 6.2 PPM on 11/15, 2.1 PPM on 11/21, 3.3 PPM on 11/22, and 9.4 PPM on 11/23.
No leaks were detected

Equipment	Number monitored	Number leaking	Percent leaking
Valves	518	0	0
Pumps	20	0	0
Agitators	6	0	0
Connectors	674	0	0

Weekly Pump and Agitator visual inspections were also done on 11/2, 11/9, 11/16, 11/23 and 11/30.
No Leaks were observed.
No Carbon Beds were changed this month. Carbon beds were not monitored due to the halt of epoxy production.

Process unit shut downs

Epi Still		Wash Vessel		6000 Reactor		9500 Reactor	
From	To	From	To	From	To	From	To
Date	Date	Date	Date	Date	Date	Date	Date
-	-	11/1	11/17	-	-	11/1	11/30
-	-	-	-	-	-	-	-

New 6000	
From	To
Date	Date
11/4	11/7
11/23	11/28

December 2016

Monitoring with PID MiniRae 3000 in the Epoxy Plant was done December 12, 13, 14, and 15th.

12/12
Epi S – Coron #63395
Wash V – EP-560 #63287
6000 – 2165 #63359
New 6000 – PR-520 #63397
9500 – 2130CB1 #63371

12/13
Epi S – Coron #63395
Wash V – EP-560 #63287
6000 – 2165 #63359
New 6000 – PR-520 #63397
9500 – 2130CB1 #63371

12/14
Epi Still – Coron #63395
Wash V – Caustic Wash
6000 – 2165 #63359
New 6000 – PR-520 #63397
9500 – 2130CB1 #63371

12/15
Epi S – Coron #63414
Wash V – Caustic Wash
6000 – 2165 #63359
New 6000 – PR-520 #63397
9500 – 2130CB1 #63371

The monitoring results were as follows:
Background reading was 3.2 PPM on 12/12, 4.1 PPM on 12/13, 9.3 PPM on 12/14, and 1.2 PPM on 12/15.
No leaks were detected; however, we discovered 5 camlock caps were not on and were replaced immediately.

Equipment	Number monitored	Number leaking	Percent leaking
Valves	518	0	0
Pumps	20	0	0
Agitators	6	0	0
Connectors	674	0	0

Weekly Pump and Agitator visual inspections were also done on 12/1, 12/7, 12/14, 12/20 and 12/28.
No Leaks were observed.
No carbon bed readings because we just started manufacturing the base novolac resin 2130CB1 to be epoxidized.
No Carbon Beds were changed this month.

Process unit shut downs

Epi Still		Wash Vessel		6000 Reactor		9500 Reactor	
From	To	From	To	From	To	From	To
Date	Date	Date	Date	Date	Date	Date	Date
12/9	12/12	12/1	12/20	12/1	12/5	12/1	12/12
-	-	-	-	12/8	12/12	-	-
-	-	-	-	12/15	12/19	-	-

New 6000	
From	To
Date	Date
12/6	12/12
12/16	12/22

ILLINOIS ENVIRONMENTAL PROTECTION AGENCY
DIVISION OF AIR POLLUTION CONTROL -- PERMIT SECTION
P.O. BOX 19506
SPRINGFIELD, ILLINOIS 62794-9506

FOR APPLICANT'S USE
Revision #: _____
Date: ____ / ____ / ____
Page _____ of _____
Source Designation: _____

COMPLIANCE AND GENERAL REPORTING FORM	FOR AGENCY USE ONLY
	ID NUMBER:
	PERMIT #:
	DATE:

THIS FORM IS USED FOR EITHER OF THE FOLLOWING:

- TO REPORT AND CERTIFY COMPLIANCE OF AN ENTIRE SOURCE OR SPECIFIC ITEMS OF EQUIPMENT WITH ALL APPLICABLE REQUIREMENTS DURING A REPORTING PERIOD, OR
- TO IDENTIFY AND ENSURE PROPER PROCESSING OF A SUBMITTED REPORT. THIS FORM SHOULD BE USED AS THE COVER SHEET OF THE SUBMITTED REPORT.

SOURCE INFORMATION

1) SOURCE NAME: DynaChem, Inc.

2) DATE FORM PREPARED: 2/28/2017

3) SOURCE ID NO. (IF KNOWN): 183806AAB

GENERAL INFORMATION

4) INDICATE FOR WHICH OF THE FOLLOWING THIS FORM IS BEING COMPLETED:

☐ **TO REPORT AND CERTIFY COMPLIANCE OF THE SOURCE OR SPECIFIC ITEMS OF EQUIPMENT WITH ALL APPLICABLE REQUIREMENTS**

☒ **TO IDENTIFY AND ENSURE PROPER PROCESSING OF A SUBMITTED REPORT**

5) PERIOD COVERED BY THIS REPORT:

FROM: 7/1/2016 TO: 12/31/2016

6) NAME AND PHONE NUMBER OF PERSON TO CONTACT FOR QUESTIONS REGARDING THIS REPORT:

NAME: Craig A. McCall TITLE: President

PHONE#: (217) 662 - 2,136 EXT: _____

THIS AGENCY IS AUTHORIZED TO REQUIRE THIS INFORMATION UNDER ILLINOIS REVISED STATUTES, 1991, AS AMENDED 1992, CHAPTER 111 1/2, PAR. 1039.5. DISCLOSURE OF THIS INFORMATION IS REQUIRED UNDER THAT SECTION. FAILURE TO DO SO MAY PREVENT THIS FORM FROM BEING PROCESSED AND COULD RESULT IN THE APPLICATION BEING DENIED. THIS FORM HAS BEEN APPROVED BY THE FORMS MANAGEMENT CENTER.

FOR APPLICANT'S USE
_____

APPLICATION PAGE _____

COMPLIANCE OF SOURCE OR EQUIPMENT DURING REPORTING PERIOD

- COMPLETE ITEM 7 BELOW IF THIS FORM IS BEING USED TO REPORT AND CERTIFY COMPLIANCE OF THE ENTIRE SOURCE.
- COMPLETE ITEM 8 BELOW IF THIS FORM IS BEING USED TO REPORT AND CERTIFY COMPLIANCE OF SPECIFIC ITEMS OF EQUIPMENT ONLY.

7) WAS THE SOURCE IN COMPLIANCE WITH ALL APPLICABLE REQUIREMENTS FOR THE ENTIRE REPORTING PERIOD? ☒ YES ☐ NO

IF YES, THEN THE "REPORT INFORMATION" SECTION ON PAGE 3 OF THIS FORM DOES NOT NEED TO BE COMPLETED.

IF NO, THEN COMPLETE AND SUBMIT FORM CAAPP-405 -"EXCESS EMISSIONS, MONITORING EQUIPMENT DOWNTIME, AND MISCELLANEOUS REPORTING FORM."

8a) LIST THE EMISSION UNIT(S) AND CONTROL EQUIPMENT FOR WHICH THIS FORM IS BEING COMPLETED TO REPORT AND CERTIFY COMPLIANCE WITH (IF ADDITIONAL SPACE IS NEEDED FOR ITEM 10, ATTACH AND LABEL AS EXHIBIT 400-A):

b) IDENTIFY THE APPLICABLE REQIREMENT(S) FOR WHICH THIS FORM IS BEING USED TO REPORT AND CERTIFY COMPLIANCE WITH:

c) IDENTIFY THE APPLICABLE REQIREMENT(S) WHICH REQUIRE THAT THIS REPORT OR CERTIFICATION BE SUBMITTED:

d) WERE THE ABOVE REFERENCED ITEMS IN 8(a) IN COMPLIANCE WITH ALL APPLICABLE REQUIREMENTS FOR THE ENTIRE REPORTING PERIOD? ☐ YES ☐ NO

IF YES, THEN THE "REPORT INFORMATION" SECTION ON PAGE 3 OF THIS FORM DOES NOT NEED TO BE COMPLETED.

IF NO, THEN COMPLETE AND SUBMIT FORM CAAPP-405 - "EXCESS EMISSIONS, MONITORING EQUIPMENT DOWNTIME, AND MISCELLANEOUS REPORTING FORM."

REPORT INFORMATION

9) TITLE OF REPORT BEING SUBMITTED:

Semi-Annual MON Compliance Report

10) IDENTIFY THE APPLICABLE REQIREMENT(S) WHICH REQUIRES THIS REPORT (IF APPLICABLE):

40 CFR 63.2520

11) BRIEFLY EXPLAIN WHAT THIS REPORT COVERS:

Compliance status with all applicable requirements.

12) ATTACH THE REPORT TO THIS FORM.

SIGNATURE BLOCK

NOTE: THIS CERTIFICATION MUST BE SIGNED BY A RESPONSIBLE OFFICIAL. APPLICATIONS WITHOUT A SIGNED CERTIFICATION WILL BE RETURNED AS INCOMPLETE.

13) I CERTIFY UNDER PENALTY OF LAW THAT, BASED ON INFORMATION AND BELIEF FORMED AFTER REASONABLE INQUIRY, THE STATEMENTS AND INFORMATION CONTAINED IN THIS APPLICATION ARE TRUE, ACCURATE AND COMPLETE.

AUTHORIZED SIGNATURE:

BY: _____ AUTHORIZED SIGNATURE

President — TITLE OF SIGNATORY

Craig A McCall — TYPED OR PRINTED NAME OF SIGNATORY

2 / 28 / 2017 — DATE

APPLICATION PAGE _____

Printed on Recycled Paper

400-CAAPP

Bruce Rauner
Governor

MAR 0 1 2017

John Baldwin
Acting Director

The Illinois Department of Corrections

Logan Correctional Center
1096 1350th Street, P.O. Box 1000 • Lincoln, IL 62656 • (217) 735-5581 TDD: (800) 526-0844

MEMORANDUM

DATE: **February 17, 2017**

TO: **Environmental Protection Agency**

FROM: **Duane Sparks**
Chief Engineer ID# 107802AAC

SUBJECT: **Composite Coal Analysis Reports**

RECEIVED
MAR 2 2017
AIR ENFORCEMENT BRANCH
U.S. EPA REGION 5

Attached please find coal analysis reports for the following months for 2016.

Coal used at Logan Correctional Center:

January 363.8 ton of high sulfur, 339.2 ton of low sulfur coal.

February 0 ton of high sulfur, 535.4 ton of low sulfur coal.

March 0 ton of high sulfur, 485.1 ton of low sulfur coal.

April 0 ton of high sulfur, 400.8 ton of low sulfur coal.

May 0 ton of high sulfur, 293.1 ton of low sulfur coal.

June 0 ton of high sulfur, 226.9 ton of low sulfur coal.

July 0 ton of high sulfur, 242.5 ton of low sulfur coal.

August 0 ton of high sulfur, 245.0 ton of low sulfur coal.

September 0 ton of high sulfur, 225.2 ton of low sulfur coal.

October 0 ton of high sulfur, 306.9 ton of low sulfur coal.

November 0 ton of high sulfur, 438.0 ton of low sulfur coal.

December 0 ton of high sulfur, 403.4 ton of low sulfur coal.

Total: High Sulfur 363.8 ton, Low Sulfur 4141.5 ton.

Logan Correctional Center blends 10% low sulfur to 90% high sulfur coal.

Used the rest of the high sulfur coal that was left on the ground from 2015.

Currently receiving all coal from Nighthawk which is low sulfur coal.

Both mines have a third party analysis the coal.

cc: IEPA, Compliance Section, Regional Office, Permit Section, and Air branch

File

ArchCoal

SHIPMENT QUALITY REPORT – Quality As Received
– Lab Quality
Including Financially Settled Tons

REVENUE MANAGEMENT SYSTEM
INFORMATION SYSTEM

Customer:

Origin Facility: Viper Loadout

From Facility:

Master Order #:

Report Date: Sunday, November 1 2015

Through Monday, November 30 2015

Ship Num	Ship Date	Movement Id	MOT	Facility	Cust	MO#	Prod.	Type	Dest	Tons	Moist.	Ash	BTU	Sul.	MAF	SO2
345965	11/02/2015	STOKER	T	VIPER	SOILCC	4963	A	S	SOILCC	49.36	15.52	9.46	10678	3.50	14234	6.56
346012	11/03/2015	STOKER	T	VIPER	SOILCC	4963	A	S	SOILCC	49.40	15.30	9.81	10691	3.45	14276	6.45
346054	11/04/2015	STOKER	T	VIPER	SOILCC	4963	A	S	SOILCC	49.66	15.61	10.00	10519	3.60	14140	6.84
346092	11/05/2015	STOKER	T	VIPER	SOILCC	4963	A	S	SOILCC	49.67	15.21	9.91	10724	3.42	14322	6.38
346228	11/09/2015	STOKER	T	VIPER	SOILCC	4963	A	S	SOILCC	25.26	15.01	9.48	10798	3.46	14300	6.41
346260	11/10/2015	STOKER	T	VIPER	SOILCC	4963	A	S	SOILCC	24.65	14.88	10.73	10643	3.56	14307	6.69
346307	11/11/2015	STOKER	T	VIPER	SOILCC	4963	A	S	SOILCC	24.65	15.15	10.34	10562	3.47	14175	6.57
346340	11/12/2015	STOKER	T	VIPER	SOILCC	4963	A	S	SOILCC	24.63	15.80	9.80	10650	3.56	14315	6.69
346432	11/13/2015	STOKER	T	VIPER	SOILCC	4963	A	S	SOILCC	123.33	15.20	10.18	10524	3.54	14103	6.73
346435	11/14/2015	STOKER	T	VIPER	SOILCC	4963	A	S	SOILCC	195.20	15.20	10.18	10524	3.54	14103	6.73
346481	11/16/2015	STOKER	T	VIPER	SOILCC	4963	A	S	SOILCC	196.95	14.75	9.83	10724	3.67	14219	6.84
346510	11/17/2015	STOKER	T	VIPER	SOILCC	4963	A	S	SOILCC	198.21	15.50	10.49	10601	3.84	14324	7.24
346554	11/18/2015	STOKER	T	VIPER	SOILCC	4963	A	S	SOILCC	146.79	14.84	9.85	10774	3.81	14306	7.07
346594	11/19/2015	STOKER	T	VIPER	SOILCC	4963	A	S	SOILCC	196.75	15.28	10.84	10512	3.66	14228	6.96
			Number of Shipments:		14				Minimum:	24.63	14.75	9.46	10512	3.42	14103	6.38
									Maximum:	198.21	15.80	10.84	10798	3.84	14324	7.24
									Standard Deviation:	74.87	0.30	0.42	99	0.13	81	0.25
									Weighted Average/Average:	96.75	15.18	10.17	10619	3.64	14225	6.86
									Total Tons:	1,354.51						

ArchCoal

Report run on: March 7, 2016 7:26 AM

* denotes Quality is not yet entered

Knight Hawk Coal Report

Analysis Report

Date **2/2/2017**

Date	Sample Id	Tons	Total Moisture	As Rec'd Ash %	Dry Ash %	As Rec'd Sulfur %	Dry Sulfur %	As Rec'd BTU/LB	Dry BTU/LB	lb SO_2/mm BTU
1/4/2016	Logan Correctional	51.83	10.04	7.95	8.84	3.28	3.65	11727	13036	5.59
1/5/2016	Logan Correctional	125.79	10.12	7.17	7.98	3.25	3.62	11827	13159	5.50
1/11/2016	Logan Correctional	76.81	10.63	8.98	10.05	3.02	3.38	11496	12863	5.25
1/13/2016	Logan Correctional	51.76	9.90	8.31	9.22	3.14	3.48	11696	12981	5.36
1/14/2016	Logan Correctional	50.04	10.38	8.00	8.93	3.09	3.45	11671	13023	5.29
1/18/2016	Logan Correctional	50.96	11.00	7.78	8.74	2.79	3.14	11615	13051	4.81
1/19/2016	Logan Correctional	25.49	9.90	7.74	8.59	3.27	3.63	11778	13072	5.55
1/20/2016	Logan Correctional	24.64	10.98	7.90	8.88	2.82	3.17	11599	13030	4.86
1/21/2016	Logan Correctional	51.79	10.13	6.58	7.32	2.85	3.17	11911	13254	4.78
1/22/2016	Logan Correctional	24.80	9.97	7.09	7.87	3.31	3.68	11861	13174	5.58
1/25/2016	Logan Correctional	77.18	10.18	8.43	9.38	3.25	3.62	11639	12958	5.58
1/26/2016	Logan Correctional	24.10	9.67	6.25	6.92	3.23	3.58	12023	13310	5.37
1/27/2016	Logan Correctional	25.52	10.39	5.83	6.51	2.80	3.13	11980	13369	4.68
1/28/2016	Logan Correctional	26.24	10.95	6.82	7.66	3.04	3.41	11759	13205	5.16
1/29/2016	Logan Correctional	50.42	9.85	6.54	7.25	2.97	3.30	11957	13263	4.97
	Weight Average	737.37	10.26	7.59	8.46	3.10	3.45	11747	13090	5.27

Knight Hawk Coal Report

Analysis Report

Date **2/2/2017**

Date	Sample Id	Tons	Total Moisture	As Rec'd Ash %	Dry Ash %	As Rec'd Sulfur %	Dry Sulfur %	As Rec'd BTU/LB	Dry BTU/LB	lb SO_2/mm BTU
2/1/2016	Logan Correctional	51.15	10.70	6.23	6.98	2.91	3.26	11879	13302	4.90
2/3/2016	Logan Correctional	51.61	11.11	5.88	6.62	2.83	3.18	11870	13354	4.76
2/4/2016	Logan Correctional	50.78	9.65	6.19	6.85	2.94	3.25	12035	13320	4.88
2/5/2016	Logan Correctional	25.45	9.12	9.37	10.31	3.00	3.30	11656	12826	5.14
2/8/2016	Logan Correctional	25.00	10.15	9.04	10.06	3.10	3.45	11556	12861	5.36
2/9/2016	Logan Correctional	25.18	9.74	8.43	9.34	3.03	3.36	11702	12965	5.18
2/10/2016	Logan Correctional	25.09	10.20	6.27	6.98	3.21	3.58	11945	13302	5.38
2/11/2016	Logan Correctional	25.02	9.20	5.69	6.27	2.98	3.28	12170	13403	4.89
2/12/2016	Logan Correctional	49.90	9.76	6.11	6.77	3.15	3.49	12031	13332	5.23
2/15/2016	Logan Correctional	50.40	11.12	7.31	8.23	2.75	3.09	11664	13123	4.70
2/16/2016	Logan Correctional	26.31	10.45	6.00	6.70	2.53	2.83	11948	13342	4.24
2/17/2016	Logan Correctional	51.18	10.74	6.44	7.21	2.63	2.95	11844	13269	4.44
2/19/2016	Logan Correctional	49.79	9.86	6.44	7.14	2.67	2.96	11970	13279	4.45
2/23/2016	Logan Correctional	50.15	9.72	6.58	7.29	2.65	2.94	11969	13258	4.43
	Weight Average	557.01	10.19	6.69	7.44	2.86	3.18	11886	13236	4.81

Knight Hawk Coal Report

Analysis Report

Date **2/2/2017**

Date	Sample Id	Tons	Total Moisture	As Rec'd Ash %	Dry Ash %	As Rec'd Sulfur %	Dry Sulfur %	As Rec'd BTU/LB	Dry BTU/LB	lb SO_2/mm BTU
3/4/2016	Logan Correctional	76.76	10.00	7.66	8.51	3.21	3.57	11775	13083	5.45
3/7/2016	Logan Correctional	76.53	8.47	8.22	8.98	3.62	3.95	11913	13015	6.06
3/8/2016	Logan Correctional	74.46	9.67	7.75	8.58	3.27	3.62	11809	13073	5.53
3/9/2016	Logan Correctional	77.81	9.54	7.63	8.43	2.94	3.25	11845	13094	4.96
3/10/2016	Logan Correctional	75.11	10.61	8.44	9.44	3.38	3.78	11576	12950	5.83
3/11/2016	Logan Correctional	75.87	10.50	8.37	9.35	3.35	3.74	11602	12963	5.76
3/14/2016	Logan Correctional	74.94	10.78	8.06	9.03	3.05	3.42	11606	13008	5.25
3/15/2016	Logan Correctional	74.87	9.83	7.28	8.07	3.14	3.48	11854	13146	5.29
3/16/2016	Logan Correctional	75.38	9.47	8.26	9.12	3.19	3.52	11765	12996	5.41
3/17/2016	Logan Correctional	74.83	9.37	8.58	9.47	3.34	3.69	11733	12946	5.70
3/18/2016	Logan Correctional	101.29	9.23	8.13	8.96	3.10	3.42	11817	13019	5.25
3/21/2016	Logan Correctional	50.55	10.75	6.69	7.50	2.64	2.96	11806	13228	4.47
3/23/2016	Logan Correctional	50.90	10.06	6.50	7.23	2.60	2.89	11932	13267	4.35
	Weight Average	959.30	9.82	7.88	8.74	3.17	3.51	11768	13050	5.38

— NO LOADS FOR APRIL

984 East Sugar Hill Road
Ava, Il 62907
Lab (618) 426-9722
Fax (618) 426-1102

Date 8/2/2016

To: Logan Correctional

Sample ID Logan Correctional

Date Sampled 5/19/16-6/27/16

Sample taken at Red Hawk Mine

Sample taken by Knight Hawk Lab

			Total	As Rec'd	DRY ASH	As Rec'd	DRY SULFUR	As Rec'd	Dry BTU	lb SO_2
		Tonnage	Moisture	% Ash	%	% SULFUR	%	BTU		mmBTU
5/19/2016	Logan Correctional	76.33	10.18	7.97	8.87	3.00	3.34	11705	13032	5.12
5/23/2016	Logan Correctional	75.43	9.58	6.65	7.36	2.81	3.11	11978	13247	4.69
5/31/2016	Logan Correctional	76.21	10.32	6.29	7.01	2.67	2.98	11925	13297	4.48
6/6/2016	Logan Correctional	76.31	9.95	6.10	6.77	3.04	3.38	12005	13331	5.07
6/10/2016	Logan Correctional	25.96	8.32	6.12	6.67	2.90	3.16	12236	13346	4.73
6/13/2016	Logan Correctional	50.63	9.13	8.88	9.77	3.35	3.69	11725	12903	5.71
6/20/2016	Logan Correctional	77.11	9.40	8.61	9.50	2.94	3.24	11725	12942	5.00
6/27/2016	Logan Correctional	77.90	9.28	8.59	9.47	3.37	3.71	11744	12945	5.73
	Weighted Average	535.88	9.65	7.46	8.25	3.01	3.33	11854	13120	5.07

Respectfully Subm
Knight Hawk Coal I

Knight Hawk Coal Report

Analysis Report

Date **2/2/2017**

Date	Sample Id	Tons	Total Moisture	As Rec'd Ash %	Dry Ash %	As Rec'd Sulfur %	Dry Sulfur %	As Rec'd BTU/LB	Dry BTU/LB	lb SO_2/mm BTU
7/1/2016	Logan Correctional	25.82	9.55	7.18	7.94	3.21	3.55	11907	13164	5.39
7/5/2016	Logan Correctional	49.42	9.46	7.87	8.69	3.56	3.93	11822	13057	6.01
7/11/2016	Logan Correctional	74.71	9.00	7.51	8.25	3.20	3.52	11939	13120	5.36
7/18/2016	Logan Correctional	25.19	9.42	8.22	9.08	3.03	3.35	11777	13002	5.15
7/19/2016	Logan Correctional	25.22	8.50	7.57	8.27	3.03	3.31	12002	13117	5.04
7/20/2016	Logan Correctional	25.24	9.33	8.11	8.95	3.33	3.67	11805	13020	5.63
7/25/2016	Logan Correctional	24.88	11.29	7.10	8.00	3.16	3.56	11671	13156	5.41
7/26/2016	Logan Correctional	24.99	9.17	7.36	8.10	3.14	3.46	11937	13142	5.26
7/27/2016	Logan Correctional	24.72	10.01	9.47	10.52	2.99	3.32	11515	12796	5.18
	Weight Average	300.19	9.43	7.77	8.58	3.22	3.55	11840	13073	5.43

Knight Hawk Coal Report

Analysis Report

Date **2/2/2017**

Date	Sample Id	Tons	Total Moisture	As Rec'd Ash %	Dry Ash %	As Rec'd Sulfur %	Dry Sulfur %	As Rec'd BTU/LB	Dry BTU/LB	lb SO_2/mm BTU
8/1/2016	Logan Correctional	24.75	10.22	9.18	10.22	2.87	3.20	11526	12838	4.98
8/2/2016	Logan Correctional	25.18	10.87	9.30	10.43	2.66	2.98	11416	12808	4.65
8/3/2016	Logan Correctional	25.37	9.59	9.53	10.54	3.08	3.41	11404	12614	5.40
8/8/2016	Logan Correctional	25.31	8.72	9.38	10.28	2.91	3.19	11547	12650	5.04
8/9/2016	Logan Correctional	25.30	9.90	9.61	10.67	2.87	3.19	11349	12596	5.06
8/10/2016	Logan Correctional	24.86	9.18	9.55	10.51	2.85	3.14	11460	12618	4.97
8/15/2016	Logan Correctional	24.91	11.06	9.21	10.35	2.94	3.31	11243	12641	5.23
8/16/2016	Logan Correctional	25.04	11.15	9.21	10.37	3.01	3.39	11229	12638	5.36
8/17/2016	Logan Correctional	24:96	10.55	9.77	10.92	2.90	3.24	11235	12560	5.15
8/22/2016	Logan Correctional	25.46	9.75	9.14	10.13	3.10	3.44	11436	12671	5.42
8/23/2016	Logan Correctional	24.95	9.37	10.04	11.08	3.13	3.45	11363	12538	5.50
8/24/2016	Logan Correctional	24.91	9.98	9.58	10.64	2.94	3.27	11342	12599	5.19
8/29/2016	Logan Correctional	24.72	8.20	10.15	11.06	3.02	3.29	11676	12719	5.17
8/30/2016	Logan Correctional	25.09	9.50	10.07	11.13	3.04	3.36	11340	12530	5.36
8/31/2016	Logan Correctional	25.97	9.19	9.79	10.78	3.12	3.44	11424	12580	5.46
	Weight Average	376.78	9.81	9.57	10.61	2.96	3.29	11399	12640	5.20

Knight Hawk Coal Report

Analysis Report

Date **2/2/2017**

Date	Sample Id	Tons	Total Moisture	As Rec'd Ash %	Dry Ash %	As Rec'd Sulfur %	Dry Sulfur %	As Rec'd BTU/LB	Dry BTU/LB	lb SO_2/mm BTU
9/6/2016	Logan Correctional	24.78	7.49	10.27	11.10	3.16	3.42	11761	12713	5.38
9/7/2016	Logan Correctional	25.39	7.88	8.36	9.07	2.84	3.08	11978	13003	4.73
9/8/2016	Logan Correctional	25.26	9.36	9.31	10.27	3.20	3.53	11630	12831	5.50
9/12/2016	Logan Correctional	25.18	11.75	8.47	9.60	2.77	3.14	11408	12927	4.85
9/13/2016	Logan Correctional	25.10	10.18	6.44	7.17	2.89	3.22	11923	13274	4.85
9/14/2016	Logan Correctional	25.23	10.40	7.48	8.35	3.02	3.37	11743	13106	5.14
9/19/2016	Logan Correctional	24.74	11.18	7.90	8.89	2.83	3.19	11572	13029	4.89
9/20/2016	Logan Correctional	24.91	11.18	7.90	8.89	2.83	3.19	11572	13029	4.89
9/21/2016	Logan Correctional	24.96	10.76	8.32	9.32	2.61	2.92	11572	12967	4.50
9/26/2016	Logan Correctional	25.39	10.11	7.83	8.71	3.00	3.34	11735	13055	5.11
9/27/2016	Logan Correctional	25.02	9.73	8.16	9.04	2.79	3.09	11742	13008	4.75
9/29/2016	Logan Correctional	25.08	9.24	9.23	10.17	3.33	3.67	11659	12846	5.71
	Weight Average	301.04	9.94	8.30	9.21	2.94	3.26	11692	12983	5.03

Knight Hawk Coal Report

Analysis Report

Date **2/2/2017**

Date	Sample Id	Tons	Total Moisture	As Rec'd Ash %	Dry Ash %	As Rec'd Sulfur %	Dry Sulfur %	As Rec'd BTU/LB	Dry BTU/LB	lb SO_2/mm BTU
10/3/2016	Logan Correctional	25.09	9.01	10.84	11.91	3.44	3.78	11462	12597	6.00
10/4/2016	Logan Correctional	25.22	8.52	8.66	9.47	3.20	3.50	11843	12946	5.40
10/5/2016	Logan Correctional	24.95	10.65	9.13	10.22	3.21	3.59	11471	12838	5.59
10/10/2016	Logan Correctional	25.04	10.32	8.15	9.09	2.85	3.18	11659	13001	4.89
10/11/2016	Logan Correctional	25.09	10.34	7.34	8.19	2.81	3.13	11771	13128	4.76
10/12/2016	Logan Correctional	24.97	9.70	8.06	8.93	3.19	3.53	11760	13023	5.42
10/17/2016	Logan Correctional	25.16	8.92	8.67	9.52	3.18	3.49	11785	12939	5.39
10/18/2016	Logan Correctional	25.19	10.48	6.51	7.27	3.03	3.38	11871	13261	5.09
10/20/2016	Logan Correctional	24.84	12.22	6.84	7.79	2.79	3.18	11575	13186	4.82
10/24/2016	Logan Correctional	24.55	10.12	6.98	7.77	3.35	3.73	11854	13189	5.65
10/25/2016	Logan Correctional	25.42	10.55	8.75	9.78	3.29	3.68	11540	12901	5.70
10/26/2016	Logan Correctional	24.96	10.35	8.62	9.61	3.39	3.78	11588	12926	5.84
10/31/2016	Logan Correctional	25.01	10.95	8.01	9.00	3.03	3.40	11588	13013	5.22
	Weight Average	325.49	10.16	8.20	9.12	3.14	3.49	11674	12996	5.37

Knight Hawk Coal Report

Analysis Report

Date **2/2/2017**

Date	Sample Id	Tons	Total Moisture	As Rec'd Ash %	Dry Ash %	As Rec'd Sulfur %	Dry Sulfur %	As Rec'd BTU/LB	Dry BTU/LB	lb SO_2/mm BTU
11/1/2016	Logan Correctional	25.17	9.98	8.03	8.92	3.26	3.62	11725	13025	5.55
11/2/2016	Logan Correctional	24.77	10.04	8.18	9.09	3.02	3.36	11695	13000	5.16
11/7/2016	Logan Correctional	24.48	10.17	8.35	9.29	3.30	3.67	11652	12971	5.65
11/8/2016	Logan Correctional	25.03	10.82	8.22	9.22	3.16	3.54	11577	12982	5.45
11/9/2016	Logan Correctional	25.18	10.82	8.22	9.22	3.16	3.54	11577	12982	5.45
11/10/2016	Logan Correctional	25.36	11.27	9.07	10.22	3.25	3.66	11312	12749	5.74
11/14/2016	Logan Correctional	24.89	10.47	6.34	7.08	2.68	2.99	11896	13287	4.50
11/15/2016	Logan Correctional	25.19	10.47	6.34	7.08	2.68	2.99	11896	13287	4.50
11/16/2016	Logan Correctional	25.19	10.74	6.72	7.53	2.74	3.07	11803	13223	4.64
11/17/2016	Logan Correctional	25.12	10.31	6.76	7.54	2.71	3.02	11859	13222	4.56
11/21/2016	Logan Correctional	25.13	10.45	6.98	7.79	2.96	3.31	11808	13186	5.02
11/22/2016	Logan Correctional	51.21	10.12	6.89	7.67	2.93	3.26	11867	13203	4.93
11/23/2016	Logan Correctional	25.12	11.63	6.12	6.92	2.36	2.67	11762	13310	4.01
11/28/2016	Logan Correctional	50.54	10.82	7.24	8.12	2.97	3.33	11717	13139	5.06
11/30/2016	Logan Correctional	51.23	10.27	8.66	9.65	2.69	3.00	11594	12920	4.64
	Weight Average	453.61	10.53	7.50	8.38	2.91	3.26	11718	13097	4.97

Knight Hawk Coal Report

Analysis Report

Date **2/2/2017**

Date	Sample Id	Tons	Total Moisture	As Rec'd Ash %	Dry Ash %	As Rec'd Sulfur %	Dry Sulfur %	As Rec'd BTU/LB	Dry BTU/LB	lb SO_2/mm BTU
12/1/2016	Logan Correctional	24.96	10.54	8.34	9.33	2.58	2.89	11602	12967	4.44
12/2/2016	Logan Correctional	25.40	10.56	10.65	11.91	2.85	3.19	11268	12597	5.06
12/5/2016	Logan Correctional	24.90	10.55	9.64	10.77	2.84	3.18	11414	12760	4.97
12/6/2016	Logan Correctional	24.29	10.78	9.74	10.93	2.93	3.28	11366	12738	5.15
12/7/2016	Logan Correctional	49.27	10.46	9.87	11.04	2.91	3.25	11394	12722	5.10
12/8/2016	Logan Correctional	25.97	10.86	9.59	10.75	3.17	3.56	11378	12763	5.57
12/9/2016	Logan Correctional	24.83	10.00	8.95	9.94	3.13	3.48	11591	12879	5.40
12/12/2016	Logan Correctional	51.68	10.25	10.06	11.21	3.12	3.47	11396	12697	5.46
12/13/2016	Logan Correctional	50.62	10.52	9.26	10.35	2.96	3.31	11472	12820	5.16
12/14/2016	Logan Correctional	51.32	10.71	8.95	10.03	2.86	3.20	11490	12867	4.97
12/15/2016	Logan Correctional	25.40	10.41	8.80	9.82	2.91	3.25	11555	12896	5.03
12/16/2016	Logan Correctional	25.29	10.46	8.24	9.20	2.87	3.20	11628	12985	4.93
12/19/2016	Logan Correctional	49.75	10.87	9.04	10.15	2.99	3.36	11454	12850	5.22
12/20/2016	Logan Correctional	50.27	10.40	9.44	10.53	2.99	3.34	11465	12795	5.22
12/21/2016	Logan Correctional	49.30	10.25	9.30	10.36	2.79	3.10	11506	12819	4.83
12/22/2016	Logan Correctional	50.79	10.20	9.61	10.70	3.13	3.48	11469	12770	5.44
12/27/2016	Logan Correctional	51.65	10.78	9.02	10.10	2.56	2.86	11429	12810	4.48
12/28/2016	Logan Correctional	50.88	10.77	9.34	10.46	2.42	2.71	11385	12760	4.26
12/29/2016	Logan Correctional	51.07	11.05	8.39	9.43	2.57	2.89	11480	12906	4.47
12/30/2016	Logan Correctional	51.39	11.38	7.67	8.66	1.92	2.17	11494	12970	3.34
	Weight Average	809.03	10.61	9.18	10.27	2.80	3.13	11458	12817	4.88

Aly Batt, PhD
Environmental Coordinator
Transportation

PHILLIPS 66
P.O. Box 4428
Houston, TX 77210-4428
Phone: (832) 765-1702
Cell: (832) 551-7186

February 21, 2017 CERTIFIED MAIL: 7013 1710 0001 9617 8767

Illinois Environmental Protection Agency
Division of Air Pollution Control
Compliance Section (MC 40)
P. O. Box 19276
Springfield, Illinois 62794-9276

Semi-Annual Monitoring Report: July 1 – December 31, 2016
East St. Louis Products Terminal
Title V Permit: 95070057
I.D. Number: 163020AAB
Phillips 66 Company

Dear Sir or Madam:

In accordance with Condition 8.6.1 of the East St. Louis Title V permit, Phillips 66 Company is submitting the attached semi-annual monitoring report for the period of **July 1 – December 31, 2016**.

If you have any questions about this letter or require additional information please do not hesitate to contact me at (832) 765-1702 or by email at aly.h.batt@p66.com.

Sincerely,

Aly Batt
Environmental Coordinator

cc: Illinois EPA – Air Regional Field Office 7013 1710 0001 9617 8774
Division of Air Pollution Control
2009 Mall Street
Collinsville, Illinois 62234

USEPA Region 5 (AE - 17J) 7013 1710 0001 9617 8781
Air and Radiation Division,
United States Environmental Protection Agency, Region 5
77 West Jackson Boulevard
Chicago, Illinois 60604

Phillips 66 Company
East St. Louis Product Terminal
Semi-Annual Monitoring

Reporting Period: July 1 – December 31, 2016

Responsible Official Certification

I certify under penalty of law that this document and all attachments were prepared under my direction or supervision in accordance with a system designed to assure that qualified personnel properly gather and evaluate the information submitted. Based on my inquiry of the person or persons directly responsible for gathering the information, the information submitted is, to the best of my knowledge and belief, true, accurate, and complete. I am aware that there are significant penalties for submitting false information, including the possibility of fine and imprisonment for knowing violations.

Signature: _____ Date: 02/13/2017

Name and Title: David Soukup, Central Division Terminals Manager

Monitoring Requirement	Summary of Results
Loading Rack: 7.1.8 Flare a. The terminal's vapor combustion unit shall be continuously monitored in the following manner: i. A continuous monitoring system (CMS) for the vapor combustion unit shall be installed, calibrated, certified, operated and maintained. (40 CFR 63.427(a)) ii. The VCU shall have a heat-sensing device, such as an ultra-violet beam sensor or a thermocouple, installed in proximity to the pilot light to indicate the presence of a flame. (40 CFR 63.427(a)(4)) iii. The VCU and its monitor shall be maintained and operated as per the manufacturer's and/or vendor's recommendations.	**No Deviations** i. A temperature monitoring system is operational and monitors the VCU exhaust temperature every minute of active loading. The PLC evaluates the temperature data and compares it to the temperature thresholds. If the temperature thresholds are not met, truck loading is inactivated. ii. A heat sensing device is located in proximity of the pilot light to monitor the presence of a flame. If a pilot is not detected, the loading rack will shutdown. iii. The VCU and pilot flame monitor are being maintained according to the manufacture.
Loading Rack: 7.1.8 Gasoline Equipment Leak Inspection b. i. The Permittee shall perform a monthly visual (sight, sound, and smell) inspection for leaks of all equipment in gasoline liquid or vapor service during the loading of a gasoline cargo tank. (40 CFR 63.424(a)) ii. When a leak is detected, repair shall be made as soon as possible. A. An initial attempt at repair shall be made no later than 5 calendar days after the leak is detected. B. Repair or replacement of leaking equipment shall be completed within 15 calendar days after detection of leak, except as provided below. C. If repair within 15 days is demonstrated on an individual leak basis to not be feasible, the owner or operator may delay repair by providing reasons why a delay is needed and the date by which repair is expected to be completed in a written report to the Agency.	**No Deviations** i. Visual inspections for leaks of all equipment in gasoline liquid or vapor service are performed during loading operations. These inspections are documented and maintained in facility files. ii. For any leaks, the initial attempt at repair was made within five days and the leak was fully repaired within 15 days.

Internal Floating Roof Storage Tanks 7.2.8; 7.38; 7.4.8	**No Deviations**
a. All of the affected tanks are subject to the NSPS requirements:	
i. Visually inspect the internal floating roof, the primary seal, and the secondary seal (if one is in service), prior to filling the storage vessel with VOL. If there are holes, tears, or other openings in the primary seal, the secondary seal or the seal fabric or defect in the internal floating roof, or both, the owner or operator shall repair the items before filling the storage vessel. [40 CFR 60.113b(a)(1)]	i. No internal floating roof tanks were emptied or repaired during this reporting period. Reports of inspections are completed whenever a tank is emptied or whenever repairs are made. Documentation is available in facility files.
ii. For affected storage tanks equipped with a liquid-mounted or mechanical shoe primary seal, visually inspect the internal floating roof and the primary seal or the secondary seal (if one is in service) through manholes and roof hatches on the fixed roof at least once every 12 months after initial fill. If the internal floating roof is not resting on the surface of the VOL inside the storage vessel or there is liquid accumulated on the roof, or the seal is detached, or there are holes or tears in the seal fabric, the owner or operator shall repair the items or empty and remove the storage vessel from service within 45 days. If a failure that is detected during inspections required in this paragraph cannot be repaired within 45 days and if the vessel cannot be emptied within 45 days, a 30-day extension may be requested from the Illinois EPA in the inspection report required in Condition 7.2.10(c)(i) (40 CFR 60.115b(a)(3)). Such a request for an extension must document that alternate storage capacity is unavailable an specify a schedule of actions the company will take that will assure that the control equipment will be repaired of the vessel will be emptied as soon as possible [40 CFR 60.113b(a)(2)]	ii. Visual through the roof hatch inspections are performed semi-annually, with the first inspection completed prior to October 1st deadline. Documentation is available in facility files.
iii. For vessels equipped with both primary and secondary seals, the Permittee shall visually inspect the affected storage tanks as follows:[40 CFR 60.113b(a)(3)] A. Visually inspect the vessel as specified in Condition 7.2.8(a)(iv) at least every 5 years; or B. Visually inspect the vessel as specified in Condition 7.2.8(a0(ii) at least once every 12 months.	iii. Visual inspections through the roof hatches are performed semi-annually, the first one was completed, prior to October 1st, deadline. Inspection reports are available in facility files.
iv. Visually inspect the internal floating roof, the primary seal, the secondary seal (if one is in service), gaskets, slotted membranes and sleeve seals (if any) each time the storage vessels is emptied and degassed. If the internal floating roof has defects, the primary seal has holes, tears, or other openings in the seal or the seal fabric, or the secondary seal has holes, tears, or other opening in the seal or the seal fabric or the gaskets no longer close off the liquid surfaces from the atmosphere, or the slotted membrane has more than 10 percent open area, the owner or operator shall repair the items as necessary so that none of the conditions specified in this paragraph exist before refilling the storage vessel with VOL . In no event shall inspections conduced in accordance with this provision occur at intervals greater than 10 years in the case of vessels conduction the annual visual inspection as	iv. Any inspections completed whenever a tank is emptied or whenever repairs are made are available in facility files.

specified in Conditions (a)(ii) and an intervals no greater than 5 years in the case of vessels specified in Condition 7.2.8(a)(iii)(A). [40 CFR 60.113b(a)(4)] b. Prior notification for the above inspection shall be given to the Illinois EPA as specified in Condition 7.2.10(c).	b. No visual inspections were performed during this reporting period so no notifications were required.
External Floating Roof Tanks 7.3.8 a. The Permittee shall inspect each affected tank semiannually, the first inspection being prior to May 1 of each year, to insure compliance with the applicable control and operating requirements [35 IAC 219.123(b)(4) and 219.124(a)(5)]. b. i. The Permittee shall measure the secondary seal gap of each affected tank prior to May 1 of each year. This is measurement shall be conducted in accordance with the methods and procedures specified in 40 CFR 60, Subpart Kb [35 IAC 219.124(a(6)]. ii. Prior notification for the above measurements shall be given to the Illinois EPA as specified in Condition 7.3.10(b). c. The Permittee shall perform a complete inspection of the cover and seals of each affected tank whenever the tank is emptied for any reason other than the transfer of liquid during the formal operation of the tank, or whenever repairs are made as a result of any semi-annual inspection or incidence of roof damage or defect [35 IAC 219.123(b)(5)].	**No Deviations** a. The semi-annual through the roof hatch inspection requirement of 35 IAC 219.123(b)(4) applies to internal floating roof tanks only. The listed affected tanks are external floating roof tanks subject to the 219.12(a)(5) requirement. b. The primary and secondary seal gaps were measured on Tanks 6813 and 6816 prior to the May 1st deadline. Notification for the seal gap measurements was provided as required. c. No external floating roof tanks were emptied or repaired during this reporting period. Reports of inspections are completed whenever a tank is emptied or whenever repairs are made are available in facility files.
Remediation Systems Pursuant to 40 CFR 63.7927(f), the Permittee shall use a continuous parameter monitoring system (CPMS) with two temperature sensors to measure and record the hourly average temperature at the inlet of the catalyst bed, the hourly average temperature at the outlet of the catalyst bed, the hourly average temperature difference across the catalyst bed, and to determine and record the daily average temperature difference across the catalyst bed.	**No Deviations** The soil vapor extraction system and CATOX control unit has remained off since the April 2011 shutdown. A Revised Construction Permit was issued on July 12, 2012 to construct emission source and air pollution control equipment consisting of a soil vapor extraction system that is controlled by a carbon adsorption system. The Soil Vapor Extraction System / Carbon Adsorption System: Semi Annual Compliance Report is reported separately. Application No.:0410031: ID No.: 163020AAB. A copy of this report is available in facility files.

Fugitive Sources 7.5.8 a. The Permittee shall visually inspect for leaks from all affected equipment components on a monthly basis. b. If a significant leak is detected by any means, including visual observation, smell or sound, the pump or compressor shall be expeditiously repaired or taken out of service. For this purpose, action shall be considered expeditious of it occurs within 15 days.	**No Deviations** a. Visual inspections for leaks are completed monthly. A log documenting this inspection is available at the facility. b. Leaks, if any, are repaired within 15 days.

Aly Batt, PhD
Environmental Coordinator
Transportation

PHILLIPS 66
P.O. Box 4428
Houston, TX 77210-4428
Phone: (832) 765-1702
Cell: (832) 551-7186

RECEIVED
MAR 03 2017
AIR ENFORCEMENT BRANCH
U.S. EPA REGION 5

February 21, 2017

CERTIFIED MAIL: 7013 1710 0001 9617 8767

Illinois Environmental Protection Agency
Division of Air Pollution Control
Compliance Section (MC 40)
P. O. Box 19276
Springfield, Illinois 62794-9276

Semi-Annual Monitoring Report: July 1 – December 31, 2016
Phillips 66 Carrier LLC
Hartford Products Terminal
Title V Permit: 95100127
I.D. Number: 119050AAN

Dear Sir or Madam:

In accordance with Condition 8.6.1 of the Hartford Title V permit, Phillips 66 Company is submitting the attached semi-annual monitoring report for the period of **July 1 – December 31, 2016.**

If you have any questions about this letter or require additional information please do not hesitate to contact me at (832) 765-1702 or by email at aly.h.batt@p66.com.

Sincerely,

Aly Batt
Environmental Coordinator

cc: Illinois EPA – Air Regional Field Office 7013 1710 0001 9617 8774
Division of Air Pollution Control
2009 Mall Street
Collinsville, Illinois 62234

USEPA Region 5 (AE - 17J)
Air and Radiation Division,
United States Environmental Protection Agency, Region 5 7013 1710 0001 9617 8781
77 West Jackson Boulevard
Chicago, Illinois 60604

Phillips 66 Company
Hartford Terminal
Semi-Annual Monitoring

Reporting Period: July 1 – December 31, 2016

Responsible Official Certification

I certify under penalty of law that this document and all attachments were prepared under my direction or supervision in accordance with a system designed to assure that qualified personnel properly gather and evaluate the information submitted. Based on my inquiry of the person or persons directly responsible for gathering the information, the information submitted is, to the best of my knowledge and belief, true, accurate, and complete. I am aware that there are significant penalties for submitting false information, including the possibility of fine and imprisonment for knowing violations.

Signature: _____ Date: 02/13/2017

Name and Title: David Soukup, Central Division Terminals Manager

Monitoring Requirement	Summary of Results
Loading Rack: 7.1.8 Flare a. The terminal's vapor combustion unit shall be continuously monitored in the following manner: i. A continuous monitoring system (CMS) for the vapor combustion unit shall be installed, calibrated, certified, operated and maintained. (40 CFR 63.427(a)) ii. The VCU shall have a heat-sensing device, such as an ultra-violet beam sensor or a thermocouple, installed in proximity to the pilot light to indicate the presence of a flame. (40 CFR 63.427(a)(4)) iii. The VCU and its monitor shall be maintained and operated as per the manufacturer's and/or vendor's recommendations.	**No Deviations** i. The Hartford Terminal loading rack is equipped with a John Zink open flare system. The flare is designed and operated per the requirements of 40 CFR 63.11(b). The Terminal Management System (TMS) ensures that the flare is operational prior to allowing a truck to load. The Bill of Lading record for each truck that is loaded and the flare monitor provide the documentation for the rack. ii. A thermocouple is used to monitor the pilot light. This device is tied to a chart recorder, logging the operation of the flare. If a pilot is not detected, the loading rack will shutdown. iii. The flare and pilot flame monitor are being maintained according to the manufacturer.
Loading Rack: 7.1.8 Gasoline Equipment Leak Inspection b. i. The Permittee shall perform a monthly visual (sight, sound, and smell) inspection for leaks of all equipment in gasoline liquid or vapor service during the loading of a gasoline cargo tank. (40 CFR 63.424(a)) ii. When a leak is detected, repair shall be made as soon as possible. A. An initial attempt at repair shall be made no later than 5 calendar days after the leak is detected. B. Repair or replacement of leaking equipment shall be completed within 15 calendar days after detection of leak, except as provided below. C. If repair within 15 days is demonstrated on an individual leak basis to not be feasible, the owner or operator may delay repair by providing reasons why a delay is needed and the date by which repair is expected to be completed in a written report to the Agency.	**No Deviations** i. Visual inspections for leaks of all equipment in gasoline liquid or vapor service are performed during loading operations. These inspections are documented and maintained in facility files. ii. For any leaks, the initial attempt at repair was made within five days and the leak was fully repaired within 15 days.

Internal Floating Roof Storage Tanks 7.2.8; 7.38; 7.4.8	**No Deviations**
a. Pursuant to 40 CFR 63.425(d), the permitee shall perform the following inspections on each affected tank as described in 40 CFR 60.113b(a):	
ii. Visually inspect the internal floating roof, the primary seal, and the secondary seal through manholes and roof hatches on the fixed roof at least once every 12 months. If the internal floating roof is not resting on the surface of the VOL inside the storage vessel, or there is liquid accumulated on the roof, or the seal is detached, or there are holes or tears in the seal fabric, the owner or operator shall repair the items or empty and remove the storage vessel from service within 45 days. If a failure that is detected during inspections required in this paragraph cannot be repaired within 45 days and if the vessel cannot be emptied within 45 days, a 30-day extension may be requested from the Illinois EPA or USEPA in the inspection report required in 40 CFR 60.115b(a)(3). Such a request for an extension must document that alternate storage capacity is unavailable and specify a schedule of actions the company will take that will assure that the control equipment will be repaired or the vessel will be emptied as soon as possible.	ii. Visual through the roof hatch inspections are performed semi-annually, with the second one completed on September 1st.
iv. Visually inspect the internal floating roof, the primary seal, the secondary seal, gaskets, slotted membranes and sleeve seals (if any) each time the storage vessel is emptied and degassed. If the internal floating roof has defects, the primary seal has holes, tears, or other openings in the seal or the seal fabric, or the secondary seal has holes, tears, or other openings in the seal or the seal fabric, or the gaskets no longer close off the liquid surfaces from the atmosphere, or the slotted membrane has more than 10 percent open area, the owner or operator shall repair the items as necessary so that none of the conditions specified in this paragraph exist before refilling the storage vessel with VOL.	iv. Inspections are performed whenever a tank is emptied and degassed or whenever repairs are made. Inspection reports are available at the facility.
v. Notify the Illinois EPA or USEPA in writing at least 30 days prior to the filling or refilling of each storage vessel for which an inspection is required by Conditions 7.2.8(a)(ii), Conditions 7.3.8(a)(ii), Conditions 7.4.8(a)(ii) to afford the Illinois EPA or USEPA the opportunity to have an observer present. If the inspection is not planned and the owner or operator could not have known about the inspection 30 days in advance or refilling the tank, the owner or operator shall notify the Illinois EPA or USEPA at least 7 days prior to the refilling of the storage vessel. Notification shall be made by telephone immediately followed by written documentation demonstrating why the inspection was unplanned. Alternatively, this notification including the written documentation may be made in writing and sent by express mail so that it is received by the Illinois EPA or USEPA at least 7 days prior to the refilling.	v. No up-close inspections were performed during this reporting period.
b. Pursuant to 35 IAC 219.123(b), subject to 35 IAC 219.123(a) no owner or operator of a stationary storage tank shall cause or allow	

the storage of any VOL in the tank unless: i. Routine inspections of the floating roof seals are conducted through roof hatches once every six months [35 IAC 219.123(b)(4)]	b. See item a.ii. above.
Fugitive Sources 7.5.8 a. The Permittee shall visually inspect for leaks from all affected equipment components on a monthly basis. Tank 2002 is inspected monthly using instrument LDAR. b. If a significant leak is detected by any means, including visual observation, smell or sound, the pump or compressor shall be expeditiously repaired or taken out of service. For this purpose, action shall be considered expeditious of it occurs within 15 days.	**No Deviations** a. Visual inspections for leaks are completed monthly. A log documenting this inspection is available at the facility. b. Leaks, if any, are repaired within 15 days.

EAGLE RIVER COAL, LLC

P.O. Box 444 • 29 West Raymond St. • Harrisburg, IL 62946 • Ph. 618-252-0490 • Fax 618-253-4300

Illinois Environmental Protection Agency
Division of Air Pollution Control
Compliance Section (#40)
P.O. Box 19276
Springfield, IL 62794-9276

RECEIVED
MAR 17 2017
AIR ENFORCEMENT BRANCH
U.S. EPA REGION 5

Illinois Environmental Protection Agency
Division of Air Pollution Control
2009 Mall Street
Collinsville, IL 62234

U.S. Environmental Protection Agency
Region V Air and Radiation Division
77 West Jackson Boulevard
Chicago, IL 60604-3590

Subj: Eagle River Coal, LLC
Coal Preparation Plant Lifetime Operating Permit Compliance
Permit I.D. No.: 165806AAA

Ladies and Gentlemen:

In accordance with terms of the subject permit, including references to Federal Regulations therein, please find enclosed copy of opacity testing results prepared by our consulting engineers, HMG Engineers, Inc.

Please direct any questions regarding this report to Gary Raines, P.E. of the Murphysboro office of HMG at 618-684-9355 or email at .

Thank you.

Ray Vanover

Ray Vanover
EVP Eagle River Coal LLC

Distribution: IEPA, Springfield (1 copy)
IEPA, Collinsville (1 copy)
USEPA, Chicago (2 copies)

Opacity Test Report

Eagle River Coal, LLC
Coal Preparation Plant
3880 Highway 145 South
Harrisburg, Illinois 62946

Applicable Permit:
Illinois Environmental Protection Agency
Lifetime Operating Permit – NSPS Source
I.D. No.: 165806AAA

Prepared For:

Eagle River Coal, LLC
29 West Raymond Street
Harrisburg, Illinois 62946

Prepared By:

HMG Engineers Inc.
1032 N. 6th Street
Murphysboro, Illinois 62966

February 2017

Table of Contents

Introduction

Summary of Results

Test Description and Execution

Appendix A – Field Data Sheets

Appendix B – Method 9 Certification

Appendix C – Process Flow Diagram

Introduction

Eagle River Coal, LLC is a surface coal mining operation located in Saline County, Illinois. The mine consists of an open pit where the coal seams are uncovered by various excavation machinery. Exposed coal seams are then removed and hauled to the processing plant/stockpile area for crushing, screening and removal of various impurities to attain a marketable product.

Operation of the preparation plant is permitted under the Lifetime Operating Permit I.D. No. 165806AAA issued June 24, 2014 by the Illinois Environmental Protection Agency. The various operational components of the plant are listed in the referenced permit and identified as emission sources relative to air pollution.

This report and the testing documented herein was authorized by Eagle River Coal, LLC and was conducted by Tim Kirschbaum and Derick Jones of HMG Engineers Inc. using the Environmental Protection Agency (EPA) Method 9 in 40 CFR Part 60 Subpart Y for the purpose of determining the opacity of outside emissions at Eagle River Mine No. 1 preparation plant. Technical matters, calculations, descriptions, and conclusions associated with this work are considered confidential, the details of which will only be released to the authorized personnel of Eagle River Coal, LLC.

Summary of Results

Emissions Testing

Results of the testing are presented in Table I, Opacity Emissions Data Eagle River Mine #1. All field data sheets are included in Appendix A, Field Data Sheets. The applicable opacity allowed by the facilities permit is 30% for the various components making up the preparation plant operation.

Process Monitoring

Sources sampled included the coal and refuse stockpiles, raw coal truck dump, hopper, conveyors, breaker, screens, preparation plant. All monitored processes are listed in Table 1.

Test Description and Execution

Monitored Processes

Most of the sampling points were previously identified within the IEPA permit. After review of the mine with plant personnel, a total of 15 sampling points were identified. This includes the 14

process listed on the Lifetime Operating Permit. The preparation plant Process Flow Diagram included herewith as Appendix C illustrates the various components in the process at the mine.

Sampling Methods

Sampling was conducted in accordance with 40 CFR Part 60 Appendix A Method 9 (visual determination of the opacity of emissions form stationary sources). The sampling periods varied with the equipment being tested. The truck dump and loader dump were tested according to Subpart Y 60.255 (h)(l)(i) and (ii). This sampling method concludes that there were three separate dumps tested by averaging all 20-second opacity readings. All of the coal processing and cleaning equipment housed within the preparation plant was tested as one unit, per 60.255 (c). Several of the emissions points were only sampled for 30 minutes instead of 60 minutes due to opacity readings being less than one-half of the opacity limit , per 60.257 (a)(1). There were up to three emissions points read concurrently as long as all three points could be read within a 70-degree viewing angle with the proper sun and positioning.

Two (2) new conveyor belts constructed under construction permit issued December 15, 2015 were monitored for new-source compliance for three (3) hour – observation time period.

Due to the relative locations of some equipment and safety concerns for the observer, Method 9 observation criteria was unable to be followed exactly for some of the sampling points. It was, however, followed as closely as possible. Appendix A documents the actual position of the observer relative to the source, wind direction, and sun position. The opacity readings taken were not significantly impacted by the minor deviations from Method 9 with respect to the observers' position.

Table 1 : Opacity Emissions Data
Eagle River Mine #1

Date	Emission Point - ID	Parameters						
		Start Time	End Time	Net Test Time (minutes)	Minimum Opacity Observation (%)	Maximum Opacity Observation (%)	Average Opacity Highest Period (%)	Average Opacity (%)
12/28/16	Truck Dump TD	13:06	13:35	30	0	10	3.75	1.00
1/31/17	Loader Dump LD	8:32	8:40	7	0	0	0.00	0.00
1/31/17	Raw Coal Hopper	8:43	9:03	20	0	0	0.00	0.00
12/28/16	Belt Feed Conveyor B.F.1 - B.C.1	12:30	13:00	30	0	0	0.00	0.00
12/15/16	Scalping Screen S.S. 1	13:08	13:38	30	0	0	0.00	0.00
12/15/16	Plant Feed Belt B.C.3	14:02	14:32	30	0	10	8.75	1.67
1/31/17	Breaker Reject Belt B.C.2	9:07	9:37	30	0	0	0.00	0.00
1/31/17	Preparation Plant PP-1	No Longer in Service						
1/31/17	Middling Coal Radial Stacker Belt B.C. 5 and RS-2	No Longer in Service						
1/31/17	Fine Coal Stacker Belt B.C.6	No Longer in Service						
1/31/17	Plant Refuse Belt & Refuse Stacker B.C.7	No Longer in Service						
1/31/17	Plant Feed Belt to Screen SS-2 B.C.8	No Longer in Service						
12/15/16	Product Coal Radial Stacker and Belt B.C.4 and RS-1	7:53	8:24	30	0	0	0.00	0.00
12/15/16	Sizing Screen SS-2	8:30	9:00	30	0	0	0.00	0.00
12/15/17	New Preparation Plant Product Belt B.C. 10 to Sizing Screen SS2	9:06	12:06	180	0	5	1.25	0.19
1/31/17	Middling Coal Pile	No Longer in Service						
1/31/17	Fines Coal Pile	No Longer in Service						
12/15/16	Product Coal Pile	7:53	8:24	30	0	0	0.00	0.00
1/31/17	B.C. 3 Split to New Plant Feed B.C. 11	9:59	13:48	180	0	0	0.00	0.00
12/28/16	Breaker Reject Coal Pile	12:28	12:58	30	0	15	7.50	1.38
1/31/17	Coal Breaker	9:07	9:37	30	0	0	0.00	0.00
12/28/16	Raw Coal Pile	13:06	13:35	30	0	0	0.00	0.00
Average Opacity Highest Period							**1.42**	
Average Opacity (%)								**0.28**

* The Loader dump reading were taken on three separate dumps into the raw coal hopper.

** Truck Dump & Raw Pile read same time - trucks end dumping reading taken on 5 trucks ove the 30 minute observation period. Truck dump read for 20 second on 5 second interval.

Appendix A – Field Data Sheets

Plant Feed Belt to Sizing Screen
BC 10
SS2

EPA
VISIBLE EMISSION OBSERVATION FORM 1

Method ~~Used~~ (Circle One)	Method 9 (circled) 203A 203B Other:
Company Name	Eagle River Coal
Facility Name	New Plant
Street Address	3800 Hwy 145
City	Harrisburg
State	IL
Zip	62946
Process	Transfer Point
Unit #	BC-10
Operating Mode	Running
Control Equipment	
Operating Mode	
Describe Emission Point	Plant Clean Coal to Belt Conveyor BC-10 + Top of SS-2
Height of Emiss. Pt. Start End	
Height of Emiss. Pt. Rel. to Observer Start End	
Distance to Emiss. Pt. Start End	
Direction to Emiss. Pt. (Degrees) Start End	
Vertical Angle to Obs. Pt. Start End	
Direction to Obs. Pt. (Degrees) Start End	
Distance and Direction to Observation Point from Emission Point Start End	
Describe Emissions Start End	
Emission Color Start End	
Water Droplet Plume	Attached ☐ Detached ☐ None ☒
Describe Plume Background Start	Trees + Sky
End	
Background Color Start	Brown
End	
Sky Conditions Start	Overcast
End	
Wind Speed Start	0
End	
Wind Direction Start End	
Ambient Temp. Start	19°F
End	
Wet Bulb Temp.	
RH Percent	

Source Layout Sketch

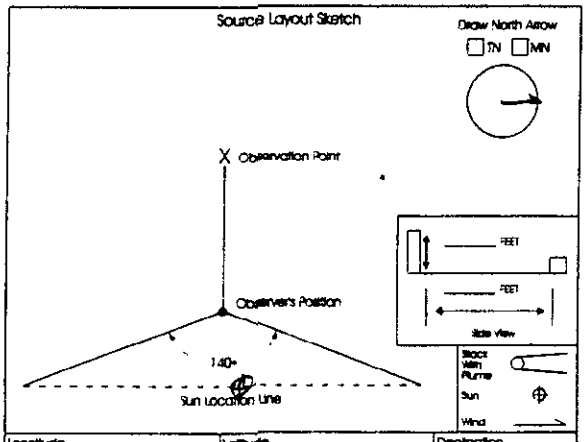

Longitude	Latitude	Declination

Additional Information

Form Number	301	Page 1	Of 6
Continued on VEO Form Number	302		

Observation Date	Time Zone	Start Time	End Time
12-15-16	Central	9:06	

Min \ Sec	0	15	30	45	Comments
1	0	0	0	0	
2	0	0	0	0	
3	0	0	0	0	
4	0	0	0	0	
5	0	0	0	0	
6	0	0	0	0	
7	0	0	0	0	
8	0	0	0	0	
9	0	0	0	0	
10	0	0	0	0	
11	0	0	0	0	
12	0	0	0	0	
13	0	0	0	0	
14	0	0	0	0	
15	0	0	0	0	
16	0	0	0	0	
17	0	0	0	0	
18	0	0	0	0	
19	0	0	0	0	
20	0	0	0	0	
21	0	0	0	0	
22	0	0	0	0	
23	0	0	0	0	
24	0	0	0	0	
25	0	0	0	0	
26	0	0	0	0	
27	0	0	0	0	
28	0	0	0	0	
29	0	0	0	0	
30	0	0	0	0	

Observer's Name (Print)	Timothy D. Kirschbaum
Observer's Signature	[signature]
Date	12-15-16
Organization	HMG Engineers Inc
Certified By	[signature]
Date	10-12-16

VEOF1.1

EPA
VISIBLE EMISSION OBSERVATION FORM 1

Form Number	3 0 2	Page 2	Of 6
Continued on VEO Form Number		3 0 3	

Method Used (Circle One): Method 9 (circled) · 203A · 203B · Other: _____

Company Name	Eagle River Coal
Facility Name	
Street Address	
City	
State	IL
Zip	

Process: Transfer Pt BC-10 Plant #	Unit # 2C10	Operating Mode: Running
Control Equipment		Operating Mode

Describe Emission Point

Height of Emiss. Pt. Start End	Height of Emiss. Pt. Rel. to Observer Start End
Distance to Emiss. Pt. Start End	Direction to Emiss. Pt. (Degrees) Start End

Vertical Angle to Obs. Pt. Start End	Direction to Obs. Pt. (Degrees) Start End
Distance and Direction to Observation Point from Emission Point Start End	

Describe Emissions: Start End

Emission Color Start End	Water Droplet Plume Attached ☐ Detached ☐ None ☐

Describe Plume Background: Start End

Background Color Start End	Sky Conditions Start Overcast End
Wind Speed Start End	Wind Direction Start End
Ambient Temp. Start End	Wet Bulb Temp. / RH Percent

Source Layout Sketch

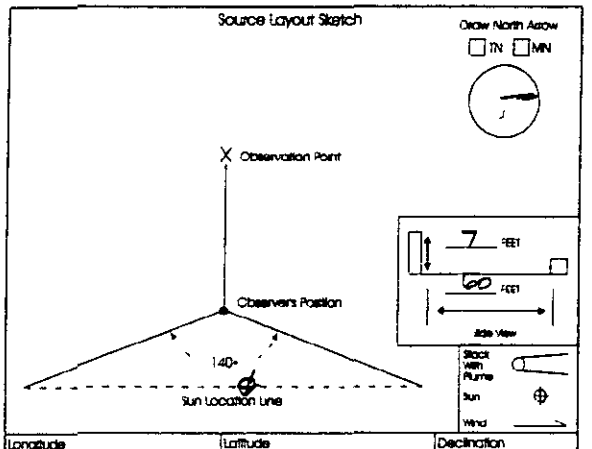

Longitude	Latitude	Declination

Additional Information: 3' Drop To Belt

Observation Date	Time Zone	Start Time	End Time
12-15-16	Central		

Min \ Sec	0	15	30	45	Comments
1	0	0	0	5	
2	0	0	5	0	
3	0	0	0	0	
4	0	0	0	0	
5	0	0	0	0	
6	0	0	0	0	
7	0	0	0	0	
8	0	0	0	0	
9	0	0	5	0	
10	0	0	0	0	
11	0	5	0	0	
12	0	0	0	0	
13	0	0	0	0	
14	0	0	0	0	
15	0	0	0	0	
16	0	0	0	0	
17	0	0	0	0	
18	0	0	0	0	
19	0	0	0	0	
20	0	0	0	0	
21	0	0	0	0	
22	0	0	0	0	
23	0	0	0	0	
24	0	0	0	0	
25	0	0	0	0	
26	0	0	0	0	
27	0	0	0	0	
28	0	0	0	0	
29	0	0	0	0	
30	0	0	0	0	

Observer's Name (Print): Timothy D Kirschbaum	
Observer's Signature: [signature]	Date: 12-15-16
Organization: HMG Engineers	
Certified By: IEPA	Date: 10-12-16

VEOF1.1

EPA
VISIBLE EMISSION OBSERVATION FORM 1

Form Number	3 0 3	Page 3	Of 4
Continued on VEO Form Number	3 0 4		

Method Used (Circle One): Method 9 | 203A | 203B | Other: _____

Company Name	Eagle River Con
Facility Name	Plant
Street Address	
City	State	Zip

Process: Tumbler, Pt to BC-10	Unit #: BC10	Operating Mode: Running-Full
Control Equipment		Operating Mode

Describe Emission Point

Height of Emiss. Pt. Start 7 End	Height of Emiss. Pt. Rel. to Observer Start End
Distance to Emiss. Pt. Start End	Direction to Emiss. Pt. (Degrees) Start End

Vertical Angle to Obs. Pt. Start End	Direction to Obs. Pt. (Degrees) Start 270 End
Distance and Direction to Observation Point from Emission Point Start 0 End	

Describe Emissions Start End	
Emission Color Start End	Water Droplet Plume Attached ☐ Detached ☐ None ☒

Describe Plume Background Start Trees End	
Background Color Start Brown End	Sky Conditions Start Overcast End
Wind Speed Start 0 End 0	Wind Direction Start — End
Ambient Temp. Start 18° End	Wet Bulb Temp. / RH Percent

Source Layout Sketch

Draw North Arrow ☐ TN ☐ MN

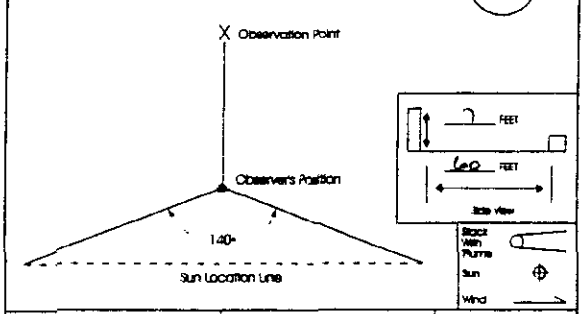

Longitude	Latitude	Declination

Additional Information

Observation Date	Time Zone: Central	Start Time	End Time

Min \ Sec	0	15	30	45	Comments
1	0	0	0	0	
2	0	0	0	0	
3	0	0	0	0	
4	0	0	0	0	
5	0	0	0	0	
6	0	0	0	0	
7	0	0	0	0	
8	0	0	0	0	
9	0	0	0	0	
10	0	0	0	0	
11	0	0	0	0	
12	0	0	0	0	
13	0	0	0	0	
14	0	0	0	0	
15	0	0	0	0	
16	0	0	0	0	
17	0	0	0	0	
18	0	0	0	0	
19	0	0	0	0	
20	0	0	0	0	
21	0	0	0	0	
22	0	0	0	0	
23	0	0	0	0	
24	0	0	0	0	
25	0	0	0	0	
26	0	0	0	0	
27	5	0	0	0	
28	0	0	0	0	
29	0	0	0	0	
30	0	0	0	0	

Observer's Name (Print)	Timothy Kirschbaum
Observer's Signature	[signature] Date 12-15-16
Organization	HMS Engineering Inc.
Certified By: EPA	Date 10-12-16

VEOF1.1

EPA
VISIBLE EMISSION OBSERVATION FORM 1

Form Number			3	0	4	Page 4	Of 4
Continued on VEO Form Number						3	0 5

Method Used (Circle One): ~~Method 9~~ 203A 203B Other: _____

Company Name	Eagle River Coal
Facility Name	PLANT
Street Address	
City	
State	IL
Zip	

Process	Transfer Pt. - Plant to Belt	Unit #	BC-10
Operating Mode	Running Full		
Control Equipment		Operating Mode	

Describe Emission Point: PLANT Belt - Clean to ~3' drop open top Shuttle to BC-10 belt

Height of Emiss. Pt.	Start 7 End	Height of Emiss. Pt. Rel. to Observer	Start 2 End 2
Distance to Emiss. Pt.	Start 60 End	Direction to Emiss. Pt. (Degrees)	Start 270 End

Vertical Angle to Obs. Pt. Start End	Direction to Obs. Pt. (Degrees) Start End
Distance and Direction to Observation Point from Emission Point Start End	

Describe Emissions: Start End

Emission Color Start End	Water Droplet Plume Attached ☐ Detached ☐ None ☒

Describe Plume Background: Start End

Background Color Start End	Sky Conditions Start Overcast End
Wind Speed Start End	Wind Direction Start End
Ambient Temp. Start End	Wet Bulb Temp. / RH Percent

Source Layout Sketch

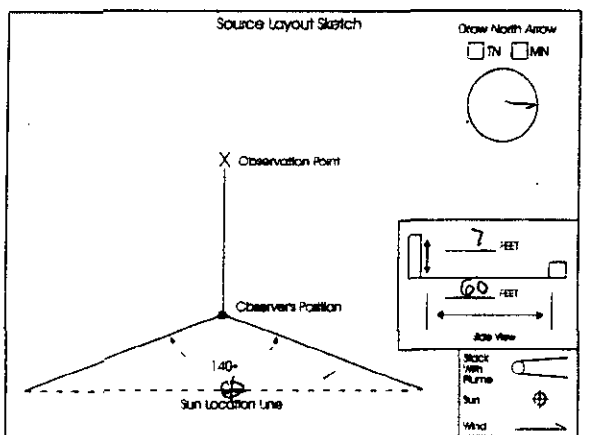

Longitude	Latitude	Declination

Additional Information:

Observation Date	Time Zone	Start Time	End Time
12-15-16	Central		

Min \ Sec	0	15	30	45	Comments
1	0	0	0	0	
2	0	0	0	0	
3	0	0	0	0	
4	0	0	0	0	
5	0	0	0	0	
6	0	0	0	0	
7	0	0	0	0	
8	0	0	0	0	
9	0	0	0	0	
10	0	0	0	0	
11	0	0	0	0	
12	0	0	0	0	
13	0	0	0	0	
14	0	0	0	0	
15	0	0	0	0	
16	0	0	0	0	
17	0	0	0	0	
18	0	0	0	0	
19	0	0	0	0	
20	0	0	0	0	
21	0	0	0	0	
22	0	0	0	0	
23	0	0	0	0	
24	0	0	0	0	
25	0	0	0	0	
26	0	0	0	0	
27	0	0	0	0	
28	0	0	0	0	
29	0	0	0	0	
30	0	0	0	0	

Observer's Name (Print)	Timothy Kirchbaum
Observer's Signature	[signature] Date 12-15-16
Organization	HMG Engineers
Certified By	IEPA Date 10-12-16

VEOF1.1

EPA
VISIBLE EMISSION OBSERVATION FORM 1

Form Number	3	0	5	Page 5	Of 6
Continued on VEO Form Number			3	0	6

Method (Circle One): Method 9 | 203A | 203B | Other: _____

Company Name	Eagle River Coal
Facility Name	PLANT
Street Address	
City	
State	IL
Zip	

Process	Transfer Point	Unit #	RC-10
Operating Mode	Running		
Control Equipment		Operating Mode	

Describe Emission Point:

Height of Emiss. Pt. Start / End	Height of Emiss. Pt. Rel. to Observer Start / End
Distance to Emiss. Pt. Start / End	Direction to Emiss. Pt. (Degrees) Start / End
Vertical Angle to Obs. Pt. Start / End	Direction to Obs. Pt. (Degrees) Start 270° End
Distance and Direction to Observation Point from Emission Point Start 0	End

Describe Emissions: Start / End

Emission Color Start / End	Water Droplet Plume Attached ☐ Detached ☐ None ☒

Describe Plume Background Start: Trees	End
Background Color Start: Brown	Sky Conditions Start: Overcast
Wind Speed Start: 0	Wind Direction Start / End
Ambient Temp. Start: 18°F	Wet Bulb Temp. / RH Percent

Source Layout Sketch

Draw North Arrow ☐ TN ☐ MN

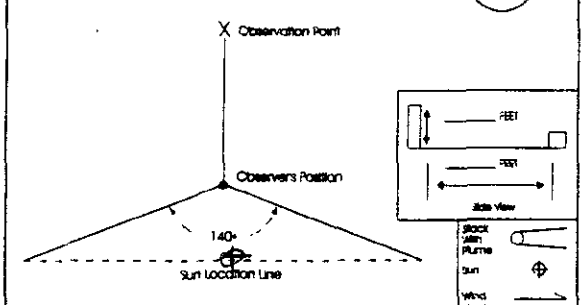

Longitude	Latitude	Declination

Additional Information:

Observation Date	Time Zone	Start Time	End Time
12-15-16	Central		

Min \ Sec	0	15	30	45	Comments
1	0	0	0	0	
2	0	0	0	0	
3	0	0	0	0	
4	0	0	0	0	
5	0	0	0	0	
6	0	0	0	0	
7	0	0	0	0	
8	0	0	0	0	
9	0	0	0	0	
10	0	0	0	0	
11	0	0	0	0	
12	0	0	0	0	
13	0	0	0	0	
14	0	0	0	0	
15	0	0	0	0	
16	0	0	0	0	
17	0	0	0	0	
18	0	0	0	0	
19	0	0	0	0	
20	0	0	0	0	
21	0	0	0	0	
22	0	0	0	0	
23	0	0	0	0	
24	0	0	0	0	
25	0	0	0	0	
26	0	0	0	0	
27	0	0	0	0	
28	0	0	0	0	
29	0	0	0	0	
30	0	0	0	0	

Observer's Name (Print)	Timothy Kirschbaum
Observer's Signature	[signature] / Date 12-15-16
Organization	MMG Engineering
Certified By	IEPA / Date 10-12-16

VEOF1.1

EPA
VISIBLE EMISSION OBSERVATION FORM 1

Form Number	3	0	6	Page 6	Of 6
Continued on VEO Form Number					

Method Used (Circle One): Method 9 | 203A | 203B | Other: _____

Company Name	Eagle River Coal
Facility Name	Plant
Street Address	
City / State / Zip	

Process	Unit #	Operating Mode
Transfer Point Plant to Bin	BC10	Running
Control Equipment		Operating Mode

Describe Emission Point: Plant Clean Coal

Height of Emiss. Pt. Start / End	Height of Emiss. Pt. Rel. to Observer Start / End
Distance to Emiss. Pt. Start / End	Direction to Emiss. Pt. (Degrees) Start / End
Vertical Angle to Obs. Pt. Start / End	Direction to Obs. Pt. (Degrees) Start / End
Distance and Direction to Observation Point from Emission Point Start / End	

Describe Emissions: Start / End

Emission Color Start / End	Water Droplet Plume: Attached ☐ Detached ☐ None ☐

Describe Plume Background: Start / End

Background Color Start / End	Sky Conditions Start / End
Wind Speed Start / End	Wind Direction Start / End
Ambient Temp. Start / End	Wet Bulb Temp. / RH Percent

Source Layout Sketch

Draw North Arrow: ☐ TN ☐ MN

X Observation Point

Observer's Position

140°

Sun Location Line

FEET

FEET

Side View

Stack With Plume

Sun

Wind

Longitude	Latitude	Declination

Additional Information:

Observation Date	Time Zone	Start Time	End Time
12-15-16	Central		12: pm

Min \ Sec	0	15	30	45	Comments
1	0	0	0	0	
2	0	0	0	0	
3	0	0	0	0	
4	0	0	0	0	
5	0	0	0	0	
6	0	0	0	0	
7	0	0	0	0	
8	0	0	0	0	
9	0	0	0	0	
10	0	0	0	0	
11	0	0	0	5	
12	0	0	0	0	
13	0	0	0	0	
14	0	0	0	0	
15	0	0	0	0	
16	0	0	0	0	
17	0	0	0	0	
18	0	0	0	0	
19	0	0	0	0	
20	0	0	0	0	
21	0	5	0	0	
22	0	0	0	0	
23	0	0	0	0	
24	0	0	0	0	
25	0	0	0	0	
26	0	0	0	0	
27	0	0	0	0	
28	0	0	0	0	
29	0	0	0	0	
30	0	0	0	0	

Observer's Name (Print)	Timothy Kirschbaum
Observer's Signature	Tim Kirschbaum — Date 12-15-16
Organization	HMG Engineers Inc
Certified By	IEPA — Date 10-12-16

VEOF1.1

Breaker Project Pile

EPA
VISIBLE EMISSION OBSERVATION FORM 1

Form Number	Page	Of
401	1	1

Continued on VEO Form Number

Method Used (Circle One): Method 9 | 203A | 203B | Other: _____

Company Name: Eagle River Coal

Facility Name: Eagle River Coal - Mine #1

Street Address: 3880 Hwy 145

City: Harrisburg | State: IL | Zip: 62946

Process: Refuse Belt Discharge | Unit #: BC-2 | Operating Mode: Running

Control Equipment | Operating Mode

Describe Emission Point: Refuse Belt to Ground

B.C #9 to Refuse Pile

Height of Emiss. Pt.: Start 30 End | Height of Emiss. Pt. Rel. to Observer: Start 30 End

Distance to Emiss. Pt.: Start 150 End | Direction to Emiss. Pt. (Degrees): Start S End

Vertical Angle to Obs. Pt.: Start End | Direction to Obs. Pt. (Degrees): Start 180 End

Distance and Direction to Observation Point from Emission Point: Start 0 End

Describe Emissions: Start Coal Dust End

Emission Color: Start Black End | Water Droplet Plume: Attached ☐ Detached ☐ None ☒

Describe Plume Background: Start Sky End

Background Color: Start Gray End | Sky Conditions: Start Overcast End

Wind Speed: Start 2 End W | Wind Direction: Start 2 End W

Ambient Temp.: Start 18° End | Wet Bulb Temp. | RH Percent

Source Layout Sketch

Draw North Arrow ☐ TN ☐ MN

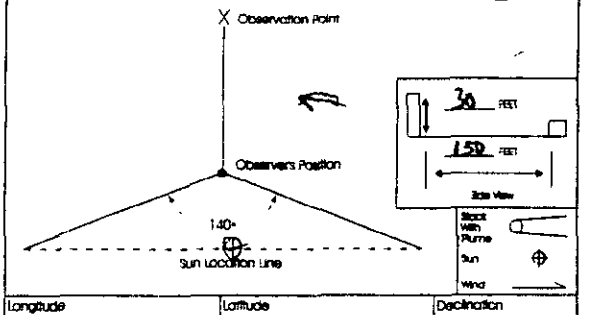

Longitude	Latitude	Declination

Additional Information

Observation Date	Time Zone	Start Time	End Time
12-15-16	Central	12:28 pm	12:58

Min \ Sec	0	15	30	45	Comments
1	0	0	0	0	
2	0	10	0	0	
3	0	0	5	0	
4	0	5	15	5	
5	0	15	10	5	
6	10	5	0	0	
7	0	0	0	10	
8	0	0	0	0	
9	0	0	15	0	
10	0	0	0	5	
11	0	0	5	5	
12	0	0	5	0	
13	0	0	0	0	
14	0	0	0	0	
15	5	0	0	0	
16	0	0	0	0	
17	0	0	0	0	
18	0	5	0	0	
19	0	0	0	0	
20	0	0	0	0	
21	0	0	0	0	
22	0	0	0	0	
23	0	0	5	0	
24	5	0	10	0	
25	0	0	0	0	
26	0	0	0	0	
27	0	0	0	0	
28	0	0	0	0	
29	0	0	0	0	
30	5	0	0	0	

Observer's Name (Print): Timothy D. Kirschbaum

Observer's Signature: [signature] | Date: 12-15-16

Organization: HMG Engineering Inc

Certified By: IEAA | Date: 10-12-16

VEOF1.1

Plant Feed Belt B.C.3

EPA
VISIBLE EMISSION OBSERVATION FORM 1

Form Number			6	0	1	Page 1	Of
Continued on VEO Form Number							

Method Used (Circle One): Method 9 (circled) 203A 203B Other: _____

Company Name	Eagle River Coal
Facility Name	PLANT – Mine #1
Street Address	3880 Hwy 145
City	Harrisburg
State	IL
Zip	62946

Process	Unit #	Operating Mode
Transfer Pt. Belt BC-3	BC-3	Running - FULL
Control Equipment		Operating Mode

Describe Emission Point: Crusha Belt to chute Feeding New Plant Belt – OLD Plant Feed TP-2 to OLD Plant

Height of Emiss. Pt. Start 7 End	Height of Emiss. Pt. Rel. to Observer Start 1 End
Distance to Emiss. Pt. Start 40 End	Direction to Emiss. Pt. (Degrees) Start 90 End
Vertical Angle to Obs. Pt. Start End	Direction to Obs. Pt. (Degrees) Start 90 End
Distance and Direction to Observation Point from Emission Point Start 0 Zenith – End 5-W	

Describe Emissions Start Dust – Coal End	
Emission Color Start BLACK End	Water Droplet Plume Attached ☐ Detached ☐ None ☒

Describe Plume Background Start Ground + Sky End	
Background Color Start Green + gray End	Sky Conditions Start Overcast End
Wind Speed Start 2 End	Wind Direction Start W End W
Ambient Temp. Start 18 °F End	Wet Bulb Temp. / RH Percent

Source Layout Sketch

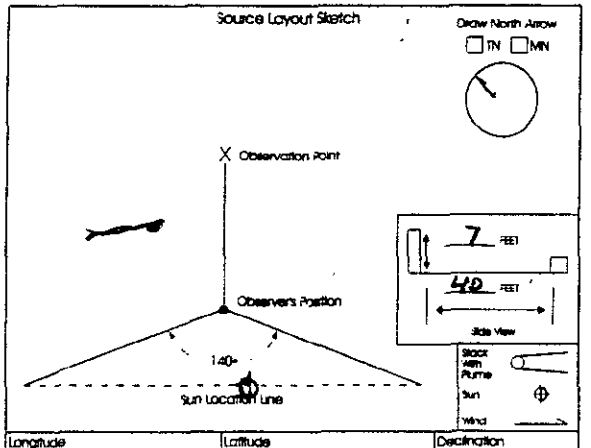

Longitude	Latitude	Declination

Additional Information

Observation Date	Time Zone	Start Time	End Time
12-15-16	Central	2:02 pm.	2:32 pm

Min \ Sec	0	15	30	45	Comments
1	0	0	0	0	
2	0	0	0	0	
3	0	0	0	0	
4	0	0	0	0	
5	0	0	0	0	
6	0	10	0	5	
7	5	0	5	0	
8	0	0	5	0	
9	0	10	5	0	
10	5	0	0	10	
11	5	0	0	0	
12	0	0	0	0	
13	0	5	5	0	
14	0	0	0	0	
15	0	0	0	0	
16	0	0	0	0	
17	0	0	0	0	
18	10	10	10	5	
19	5	5	5	10	
20	5	0	0	0	
21	0	0	0	5	
22	5	5	5	5	
23	0	5	5	0	
24	5	0	0	0	
25	0	0	0	0	
26	0	5	5	0	
27	0	0	0	0	
28	0	5	0	0	
29	0	0	5	0	
30	5	0	0	0	

Observer's Name (Print)	Timothy Kirschbaum
Observer's Signature	[signature]
Date	12-15-16
Organization	HMG Engineers Inc
Certified By	IEPA
Date	10-12-16

VEOF1.1

EPA
VISIBLE EMISSION OBSERVATION FORM 1

Form Number						Page		Of	
			2	0	L	1		1	
Continued on VEO Form Number									

Method Used (Circle One): Method 9 (circled) 203A 203B Other: _____

Company Name	Eagle River Coal
Facility Name	PLANT - MAC #7
Street Address	3880 Hwy 145
City	Harrisburg
State	IL
Zip	62946

Process	Unit #	Operating Mode
Transfer Point	BC4	Running
Control Equipment		Operating Mode: Full

Describe Emission Point: Product Coal BC10 to Radial Stacker + Belt
BC 10 to BC4 Thru SS-2

Height of Emiss. Pt. Start 4' End	Height of Emiss. Pt. Rel. to Observer Start 4' End
Distance to Emiss. Pt. Start 50' End	Direction to Emiss. Pt. (Degrees) Start 335 End
Vertical Angle to Obs. Pt. Start End	Direction to Obs. Pt. (Degrees) Start 335 End
Distance and Direction to Observation Point from Emission Point Start 3-W	End 3-W

Describe Emissions Start	End
Emission Color Start End	Water Droplet Plume Attached ☐ Detached ☐ None ☒

Describe Plume Background Start Highway	End
Background Color Start Brown End	Sky Conditions Start Cloudy End
Wind Speed Start 0 End 2	Wind Direction Start 62 End W
Ambient Temp. Start 18°F End 18°F	Wet Bulb Temp. / RH Percent

Source Layout Sketch

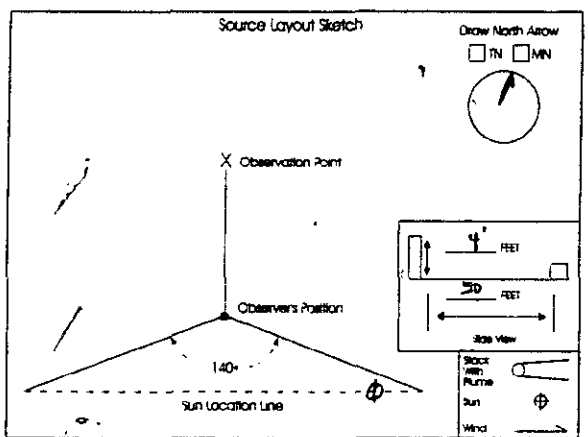

Longitude	Latitude	Declination

Additional Information

Observation Date	Time Zone	Start Time	End Time
12-15-16	Central	8:30	9:00 AM

Min \ Sec	0	15	30	45	Comments
1	0	0	0	0	
2	0	0	0	0	
3	0	0	0	0	
4	0	0	0	0	
5	0	0	0	0	
6	0	0	0	0	
7	0	0	0	0	
8	0	0	0	0	
9	0	0	0	0	
10	0	0	0	0	
11	0	0	0	0	
12	0	0	0	0	
13	0	0	0	0	
14	0	0	0	0	
15	0	0	0	0	
16	0	0	0	0	
17	0	0	0	0	
18	0	0	0	0	
19	0	0	0	0	
20	0	0	0	0	
21	0	0	0	0	
22	0	0	0	0	
23	0	0	0	0	
24	0	0	0	0	
25	0	0	0	0	
26	0	0	0	0	
27	0	0	0	0	
28	0	0	0	0	
29	0	0	0	0	
30	0	0	0	0	

Observer's Name (Print)	Timothy Kirschbaum
Observer's Signature	[signature]
Date	12-15-16
Organization	HMG Engineers
Certified By	IEPA
Date	10-12-15

VEOF1.1

New Plant Feed BC-10 Thru SS-2 to BC-4 Top Screen Tail Radial Stacker

Product Coal Pile

EPA
VISIBLE EMISSION OBSERVATION FORM 1

Form Number	1	0	1	Page 1	Of
Continued on VEO Form Number					

Method Used (Circle One): Method 9 (circled) 203A 203B Other: _____

Company Name	Eagle River Coal
Facility Name	PLANT
Street Address	3880 Hwy 145
City	Harrisburg
State	IL
Zip	62946

Process	Unit #	Operating Mode
Clean Coal Pile		Running
Control Equipment		Operating Mode

Describe Emission Point: Clean Coal Pile

End of Belt to Ground ≈ 20' Drop

Height of Emiss. Pt. Start 20 End	Height of Emiss. Pt. Rel. to Observer Start End
Distance to Emiss. Pt. Start 100 End	Direction to Emiss. Pt. (Degrees) Start End
Vertical Angle to Obs. Pt. Start End	Direction to Obs. Pt. (Degrees) Start 0 End
Distance and Direction to Observation Point from Emission Point Start 0 End	

Describe Emissions: Start None End

Emission Color Start End	Water Droplet Plume Attached ☐ Detached ☐ None ☒

Describe Plume Background: Start Sky - Blue End Sky

Background Color Start Lt Blue End Lt Blue	Sky Conditions Start Clear End
Wind Speed Start 0 End	Wind Direction Start End
Ambient Temp. Start 18°F End	Wet Bulb Temp. / RH Percent

Source Layout Sketch

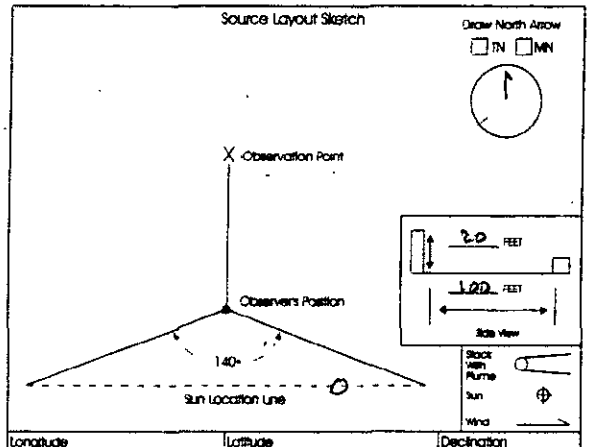

Longitude	Latitude	Declination

Additional Information

Observation Date	Time Zone	Start Time	End Time
12-15-16	Central	7:53 am	8:24 am

Min \ Sec	0	15	30	45	Comments
1	0	0	0	0	
2	0	0	0	0	
3	0	0	0	0	
4	0	0	0	0	
5	0	0	0	0	
6	0	0	0		
7	0	0	0	0	
8	0	0	0	0	
9	0	0	0	0	
10	0	0	0	0	
11	0	0	0	0	
12	0	0	0	0	
13	0	0	0	0	
14	0	0	0	0	
15	0	0	0	0	
16	0	0	0	0	
17	0	0	0	0	
18	0	0	0	0	
19	0	0	0	0	
20	0	0	0	0	
21	0	0	0	0	
22	0	0	0	0	
23	0	0	0	0	
24	0	0	0	0	
25	0	0	0	0	
26	0	0	0	0	
27	0	0	0	0	
28	0	0	0	0	
29	0	0	0	0	
30	0	0	0	0	

Observer's Name (Print)	Timothy Kirschbaum
Observer's Signature	[signature]
Date	12-15-16
Organization	HMG Engineers Inc
Certified By	IEPA
Date	10-12-16

VEOF1.1

BS-1 + C.C.Pile Radial Stacker

Coal
Hopper to BF-1

EPA
VISIBLE EMISSION OBSERVATION FORM 1

Form Number	Page	Of
	1	1

Continued on VEO Form Number:

Method Used (Circle One): Method 9 | 203A | 203B | Other: _____

Company Name	Eagle River Coal
Facility Name	Preparation Plant Mine #1
Street Address	3880 Hwy 145
City	Harrisburg
State	IL
Zip	62946

Process	Belt Coal to TP-1	Unit #	BF-1
Operating Mode	Running		
Control Equipment	Moisture Content of Coal	Operating Mode	Running - HALF

Describe Emission Point: Hopper Feed to Belt - Direct

Height of Emiss. Pt.	Start 4'-6 End 4'-6	Height of Emiss. Pt. Rel. to Observer	Start 0 End
Distance to Emiss. Pt.	Start 60 End 60	Direction to Emiss. Pt. (Degrees)	Start 90 End
Vertical Angle to Obs. Pt.	Start 0 End	Direction to Obs. Pt. (Degrees)	Start 90 End

Distance and Direction to Observation Point from Emission Point: Start East End

Describe Emissions: Start Fugitive Coal Dust End

Emission Color	Start None End	Water Droplet Plume	Attached ☐ Detached ☐ None ☒

Describe Plume Background	Start Hillside Brown + Conveyor of Belt + Sky		End
Background Color	Start Brown End Conveyor Gray	Sky Conditions	Start Overcast End Overcast
Wind Speed	Start 0 End 0	Wind Direction	Start — End —
Ambient Temp.	Start ~40° End	Wet Bulb Temp.	RH Percent

Source Layout Sketch

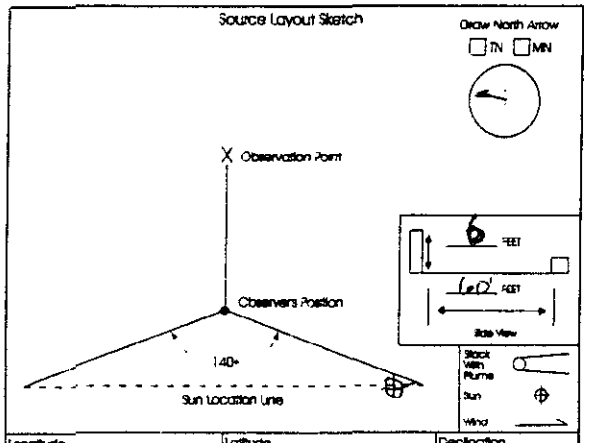

Longitude	Latitude	Declination

Additional Information: → Half Tonnage

Observation included Hopper w/ Loader Maintaining Hopper

Observation Date	Time Zone	Start Time	End Time
12-28-16	Cntl	12:30 PM	12:55 PM

Min \ Sec	0	15	30	45	Comments
1	0	0	0	0	
2	0	0	0	0	
3	0	0	0	0	
4	0	0	0	0	
5	0	0	0	0	
6	0	0	0	0	
7	0	0	0	0	
8	0	0	0	0	
9	0	0	0	0	
10	0	0	0	0	
11	0	0	0	0	
12	0	0	0	0	
13	0	0	0	0	
14	0	0	0	0	
15	0	0	0	0	
16	0	0	0	0	
17	0	0	0	0	
18	0	0	0	0	
19	0	0	0	0	
20	0	0	0	0	
21	0	0	0	0	
22	0	0	0	0	
23	0	0	0	0	
24	0	0	0	0	
25	0	0	0	0	
26	0	0	0	0	
27	0	0	0	0	
28	0	0	0	0	
29	0	0	0	0	
30	0	0	0	0	

Observer's Name (Print)	Timothy Kirschbaum
Observer's Signature	[signature] Date 12-28-16
Organization	AMG Engineering
Certified By	EPA Date 10-12-16

VEOF1.1

Red Hopper + Belt to BF-1

RAW COAL Pile

EPA
VISIBLE EMISSION OBSERVATION FORM 1

Form Number		Page 1 Of 1
Continued on VEO Form Number		

Method Used (Circle One): Method 9 (circled) 203A 203B Other: _____

Company Name	Eagle River Coal
Facility Name	Preparation Plant
Street Address	
City	Harrisburg
State	IL
Zip	

Process: Stockpile	Unit #:	Operating Mode:
Control Equipment: Coal Moisture		Operating Mode:

Describe Emission Point: RAW COAL Piles - Single Truck Dumped

Height of Emiss. Pt. Start End	Height of Emiss. Pt. Rel. to Observer Start End
Distance to Emiss. Pt. Start End	Direction to Emiss. Pt. (Degrees) Start End
Vertical Angle to Obs. Pt. Start End	Direction to Obs. Pt. (Degrees) Start End
Distance and Direction to Observation Point from Emission Point Start End	

Describe Emissions: Start Coal Dust End

Emission Color Start Black End	Water Droplet Plume Attached ☐ Detached ☐ None ☒

Describe Plume Background: Start Trees + Sky End

Background Color Start Gray End	Sky Conditions Start Quickest End
Wind Speed Start 0 End	Wind Direction Start End
Ambient Temp. Start ~40° End	Wet Bulb Temp. / RH Percent

Source Layout Sketch

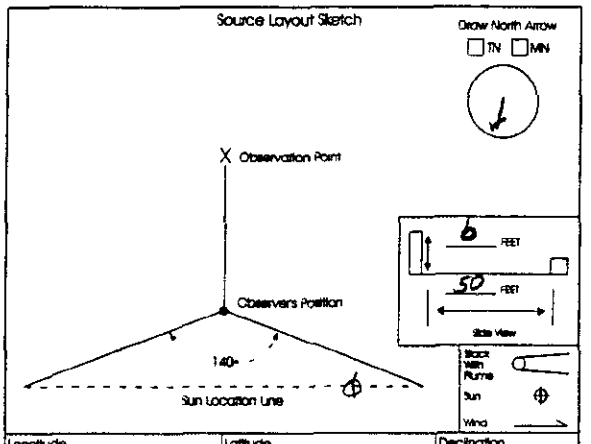

Longitude	Latitude	Declination

Additional Information: RAW COAL - Small End Dumped Piles - Loader Moving to Hopper Bins

Observation Date	Time Zone	Start Time	End Time
12-28-16	Central	1:04 pm	1:35 pm

Min \ Sec	0	15	30	45	Comments
1	0	0	0	0	
2	0	0	0	0	
3	0	0	0	0	
4	0	0	0	—	Truck observation
5	0	0	0	0	
6	0	—	0	0	Truck observation
7	0	0	0	0	
8	0	0	0	0	
9	0	0	0	0	
10	0	0	0	0	
11	0	0	0	0	
12	—	0	0	0	Truck observation
13	0	0	0	0	
14	0	0	0	0	
15	0	0	0	0	
16	0	0	0	0	
17	0	0	0	0	
18	0	0	0	0	
19	0	0	0	0	
20	0	0	—	0	Truck obs
21	0	0	0	0	
22	0	0	0	0	
23	0	0	0	0	
24	0	0	0	0	
25	0	0	0	0	
26	0	0	0	0	
27	0	0	0	0	
28	0	—	0	0	Truck obs
29	0	0	0	0	
30	0	0	0	0	

Observer's Name (Print)	Timothy Kiesel [illegible]
Observer's Signature	[signature]
Date	12-28-16
Organization	HMG Engineers
Certified By	IEPA
Date	10-12-16

VEOF1.1

EPA
VISIBLE EMISSION OBSERVATION FORM 1

Form Number		Page	Of
Continued on VEO Form Number			

Method Used (Circle One): ~~Method 9~~ 203A 203B Other: _____

Company Name		
Facility Name: Prop Plant		
Street Address		
City	State	Zip

Process: Truck Dump	Unit #	Operating Mode
Control Equipment		Operating Mode

Describe Emission Point: Trucks End Dumping to ground
Loader - Moving Coal to Hopper.

Height of Emiss. Pt. Start ~6 End	Height of Emiss. Pt. Rel. to Observer Start End
Distance to Emiss. Pt. Start 50' End	Direction to Emiss. Pt. (Degrees) Start End

Vertical Angle to Obs. Pt. Start End	Direction to Obs. Pt. (Degrees) Start End
Distance and Direction to Observation Point from Emission Point Start End	

Describe Emissions Start End	
Emission Color Start End	Water Droplet Plume Attached ☐ Detached ☐ None ☐

Describe Plume Background Start End		
Background Color Start GRAY End	Sky Conditions Start OVERCAST End	
Wind Speed Start 0 End 0	Wind Direction Start End	
Ambient Temp. Start ~40 End	Wet Bulb Temp.	RH Percent

Source Layout Sketch

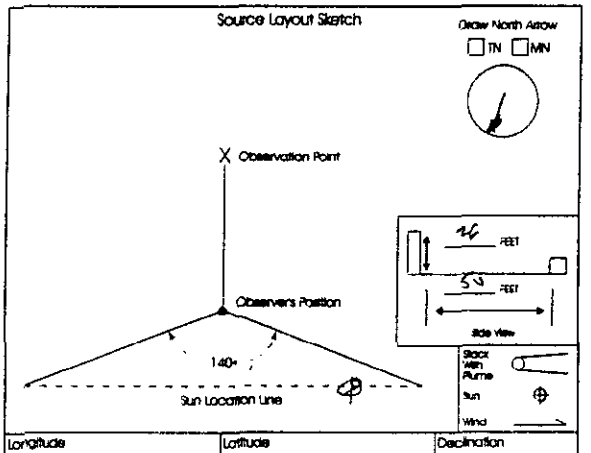

Longitude	Latitude	Declination

Additional Information

Observation Date	Time Zone	Start Time	End Time
12-28-16	Central		

Min \ Sec	0	5	15	25	Comments
1	0	0	10	5	Truck 1
2	0	5	0	0	Truck 2
3	0	0	0	0	Truck 3
4	0	0	10	0	Truck 4
5	0	0	0	0	Truck 5
6					
7					
8					
9					
10					
11					
12					
13					
14					
15					
16					
17					
18					
19					
20					
21					
22					
23					
24					
25					
26					
27					
28					
29					
30					

Observer's Name (Print): Timothy Kirschbaum	
Observer's Signature: [signature]	Date: 12-28-16
Organization: HMC Engineering	
Certified By: IEPA	Date: 10-12-19

VEOF1.1 READ with Rawpile Stockpile

EPA
VISIBLE EMISSION OBSERVATION FORM 1

Method Used (Circle One): Method 9 | 203A | 203B | Other: _____

Form Number	Page	Of
Continued on VEO Form Number		

Company Name		
Eagle River LLC		
Facility Name		
Eagle River Mine No 1		
Street Address		
City	State	Zip
Harrisburg	IL	

Process	Unit #	Operating Mode
		running
Control Equipment		Operating Mode

Describe Emission Point: Loader Dump to ~~stock~~ hopper

Height of Emiss. Pt.		Height of Emiss. Pt. Rel. to Observer	
Start 20	End	Start 20	End 20
Distance to Emiss. Pt.		Direction to Emiss. Pt. (Degrees)	
Start 75'	End 75'	Start W	End W

Vertical Angle to Obs. Pt.		Direction to Obs. Pt. (Degrees)	
Start	End	Start	End

Distance and Direction to Observation Point from Emission Point: Start 75' W. End 75' W

Describe Emissions: Start _____ End _____

Emission Color		Water Droplet Plume
Start	End	Attached ☐ Detached ☐ None ☒

Describe Plume Background: Start _____ End _____

Background Color		Sky Conditions	
Start	End	Start Cloudy	End Clouds
Wind Speed		Wind Direction	
Start 5-10	End 5-10	Start S	End S
Ambient Temp.		Wet Bulb Temp.	RH Percent
Start 45	End 45		

Source Layout Sketch

Draw North Arrow: ☐ TN ☐ MN

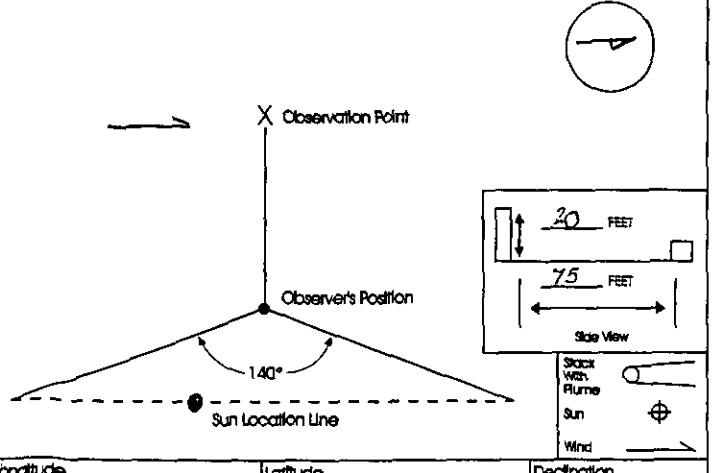

Longitude	Latitude	Declination

Additional Information: gps pt 1210

Observation Date	Time Zone	Start Time	End Time
Jan 31, 2017		8:32	8:40

Min \ Sec	0	15	30	45	Comments
1	0	0			
2	0	0	0	0	
3	0	0	0	0	
4					
5					
6					
7					
8					
9					
10					
11					
12					
13					
14					
15					
16					
17					
18					
19					
20					
21					
22					
23					
24					
25					
26					
27					
28					
29					
30					

Observer's Name (Print)	
Derrick Jones	
Observer's Signature	Date
[signature]	Jan 31, 2015
Organization	
HMG Engineers	
Certified By	Date

EPA
VISIBLE EMISSION OBSERVATION FORM 1

Form Number						Page	Of
Continued on VEO Form Number							

Method Used (Circle One): Method 9 | 203A | 203B | Other: _____

Company Name		
Facility Name		
Street Address		
City	State	Zip

Process	Unit #	Operating Mode
Control Equipment		Operating Mode

Describe Emission Point: Raw Coal Hopper

Height of Emiss. Pt. Start 10 End 10	Height of Emiss. Pt. Rel. to Observer Start 10 End 10
Distance to Emiss. Pt. Start 50 End 50	Direction to Emiss. Pt. (Degrees) Start 4) End 4)
Vertical Angle to Obs. Pt. Start End	Direction to Obs. Pt. (Degrees) Start End
Distance and Direction to Observation Point from Emission Point Start End	

Describe Emissions Start End	
Emission Color Start End	Water Droplet Plume Attached ☐ Detached ☐ None ☐

Describe Plume Background Start End		
Background Color Start End	Sky Conditions Start End	
Wind Speed Start End	Wind Direction Start End	
Ambient Temp. Start End	Wet Bulb Temp.	RH Percent

Source Layout Sketch

Draw North Arrow ☐ TN ☐ MN

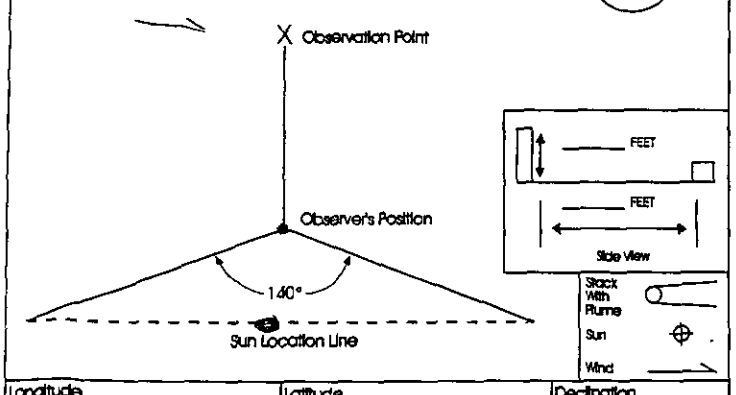

Longitude	Latitude	Declination

Additional Information: gps pt 126

Observation Date	Time Zone	Start Time	End Time
JAN 31, 2017		8:43	9:03

Min \ Sec	0	15	30	45	Comments
1	0	0	0	0	
2	0	0	0	0	
3	0	0	0	0	
4	0	0	0	0	
5	0	0	0	0	
6	0	0	0	0	
7	0	0	0	0	
8	0	0	0	0	
9	0	0	0	0	
10	0	0	0	0	
11	0	0	0	0	
12	0	0	0	0	
13	0	0	0	0	
14	0	0	0	0	
15	0	0	0	0	
16	0	0	0	0	
17	0	0	0	0	
18	0	0	0	0	
19	0	0	0	0	
20	0	0	0	0	
21					
22					
23					
24					
25					
26					
27					
28					
29					
30					

Observer's Name (Print) Dennis Jones	
Observer's Signature Dennis Jones	Date Jan 31, 2017
Organization	
Certified By	Date

VEOF 1.1

EPA
VISIBLE EMISSION OBSERVATION FORM 1

Form Number	Page	Of

Continued on VEO Form Number

Method Used (Circle One): Method 9 | 203A | 203B | Other: _____

Company Name		
Facility Name		
Street Address		
City	State	Zip

Process	Unit #	Operating Mode
Control Equipment: Water spray		Operating Mode

Describe Emission Point: Coal crusher Coal Breaker

Height of Emiss. Pt.	Height of Emiss. Pt. Rel. to Observer
Start 50 45 End 50 45	Start End
Distance to Emiss. Pt.	**Direction to Emiss. Pt. (Degrees)**
Start 100 End 100	Start W End W

Vertical Angle to Obs. Pt.	Direction to Obs. Pt. (Degrees)
Start End	Start End
Distance and Direction to Observation Point from Emission Point	
Start End	

Describe Emissions: Start End

Emission Color	Water Droplet Plume
Start End	Attached ☐ Detached ☐ None ☐

Describe Plume Background: Start End

Background Color	Sky Conditions
Start Gray End	Start Cloudy End
Wind Speed	**Wind Direction**
Start 5-10 End 5-10	Start S End
Ambient Temp.	**Wet Bulb Temp.** / **RH Percent**
Start 45 End 45	

Source Layout Sketch

Draw North Arrow ☐ TN ☐ MN

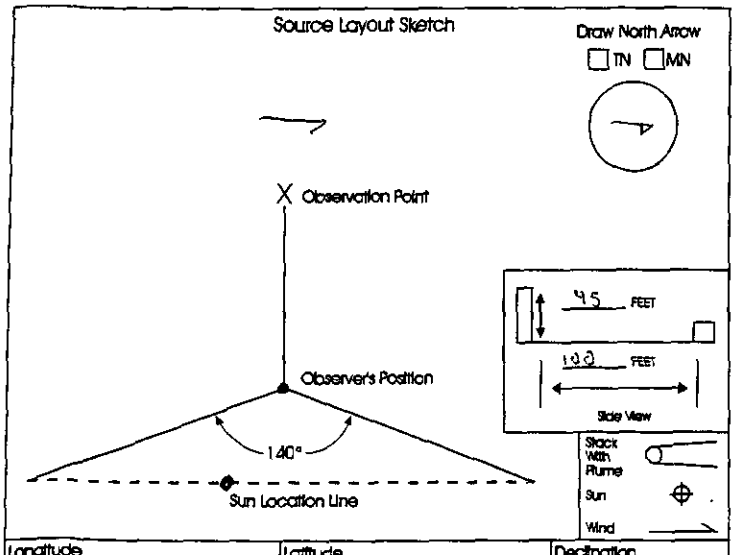

Longitude	Latitude	Declination

Additional Information: gps pt 127

Observation Date	Time Zone	Start Time	End Time
Jan 31, 2017		9:07	9:37

Min \ Sec	0	15	30	45	Comments
1	0	0	0	0	
2	0	0	0	0	
3	0	0	0	0	
4	0	0	0	0	
5	0	5	0	0	
6	0	0	0	0	
7	0	0	5	0	
8	0	0	0	0	
9	0	0	0	0	
10	5	0	5	0	
11	0	0	0	0	
12	0	0	0	0	
13	0	0	0	0	
14	0	0	0	0	
15	0	0	0	0	
16	0	0	5	0	
17	0	0	0	0	
18	0	0	0	0	
19	0	0	5	0	
20	0	0	0	0	
21	0	0	0	0	
22	0	5	0	0	
23	0	0	0	0	
24	0	0	0	0	
25	0	5	0	0	
26	0	0	0	0	
27	0	0	0	0	
28	0	0	5	5	
29	0	0	0	0	
30	0	0	0	0	

Observer's Name (Print)		
Derrick Jones		
Observer's Signature	Date	
Derrick Jones	Jan 31, 2017	
Organization		
HMT Engineers Inc		
Certified By	Date	

VEOF 1.1

B.C. 11

EPA
VISIBLE EMISSION OBSERVATION FORM 1

Form Number	Page 1 Of 6
Continued on VEO Form Number	

Method Used (Circle One): Method 9 | 203A | 203B | Other: _____

Company Name: Eagle River Coal LLC		
Facility Name: Eagle River Mine No. 1		
Street Address		
City: Harrisburg	State: IL	Zip

Process	Unit #	Operating Mode
Control Equipment		Operating Mode

Describe Emission Point: Belt from crusher to plant

Height of Emiss. Pt. Start 25 End 25	Height of Emiss. Pt. Rel. to Observer Start 25 End 25
Distance to Emiss. Pt. Start 100 End 100	Direction to Emiss. Pt. (Degrees) Start End
Vertical Angle to Obs. Pt. Start End	Direction to Obs. Pt. (Degrees) Start End
Distance and Direction to Observation Point from Emission Point Start End	

Describe Emissions Start End	
Emission Color Start End	Water Droplet Plume Attached ☐ Detached ☐ None ☐

Describe Plume Background Start End		
Background Color Start End	Sky Conditions Start End	
Wind Speed Start End	Wind Direction Start End	
Ambient Temp. Start End	Wet Bulb Temp.	RH Percent

Source Layout Sketch

Draw North Arrow ☐ TN ☐ MN

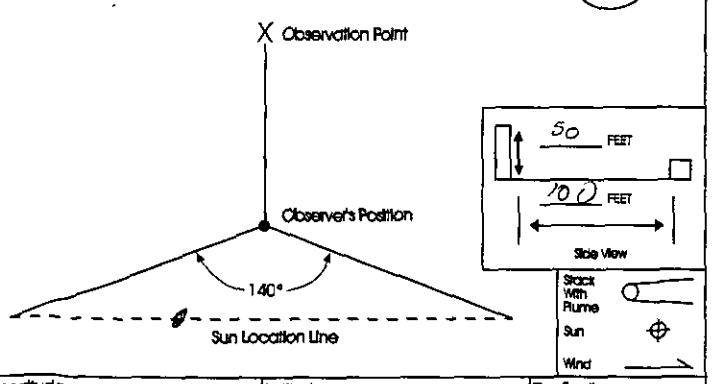

Longitude	Latitude	Declination

Additional Information

Observation Date	Time Zone	Start Time	End Time
Jan 31, 2016		9:59	

Min \ Sec	0	15	30	45	Comments
1	0	0	0	0	
2	0	0	0	0	
3	0	0	0	0	
4	0	0	0	0	
5	0	0	0	0	
6	0	0	0	0	
7	0	0	0	0	
8	0	0	0	0	
9	0	0	0	0	
10	0	0	0	0	
11	0	0	0	0	
12	0	0	0	0	
13	0	0	0	0	
14	0	0	0	0	
15	0	0	0	0	
16	0	0	0	0	
17	0	0	0	0	
18	0	0	0	0	
19	0	0	0	0	
20	0	0	0	0	
21	0	0	0	0	
22	0	0	0	0	
23	0	0	0	0	
24	0	0	0	0	
25	0	0	0	0	
26	0	0	0	0	
27	0	0	0	0	
28	0	0	0	0	
29	0	0	0	0	
30	0	0	0	0	

Observer's Name (Print): Derick Jones	
Observer's Signature: [signature]	Date: 12/31/17
Organization	
Certified By	Date

VEOF 1.1

EPA
VISIBLE EMISSION OBSERVATION FORM 1

Form Number						Page 2 Of 6
Continued on VEO Form Number						

Method Used (Circle One)
Method 9 203A 203B Other: _____

Company Name		
Facility Name		
Street Address		
City	State	Zip

Process	Unit #	Operating Mode
Control Equipment		Operating Mode

Describe Emission Point
Belt conveyor to plant

Height of Emiss. Pt.	Height of Emiss. Pt. Rel. to Observer
Start End	Start End
Distance to Emiss. Pt.	Direction to Emiss. Pt. (Degrees)
Start End	Start End

Vertical Angle to Obs. Pt.	Direction to Obs. Pt. (Degrees)
Start End	Start End

Distance and Direction to Observation Point from Emission Point
Start End

Describe Emissions
Start End

Emission Color	Water Droplet Plume
Start End	Attached ☐ Detached ☐ None ☐

Describe Plume Background
Start End

Background Color	Sky Conditions
Start End	Start End
Wind Speed	Wind Direction
Start End	Start End

Ambient Temp.	Wet Bulb Temp.	RH Percent
Start End		

Source Layout Sketch

Draw North Arrow
☐ TN ☐ MN

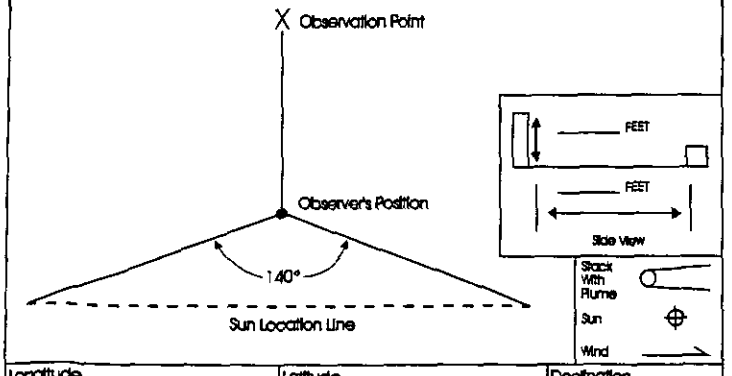

Longitude	Latitude	Declination

Additional Information

Observation Date	Time Zone	Start Time	End Time

Min \ Sec	0	15	30	45	Comments
1	6	0	0	0	
2	0	0	0	0	
3	0	0	0	0	
4	0	0	0	0	
5	0	0	0	0	
6	0	0	0	0	
7	0	0	0	0	
8	0	0	0	0	
9	0	0	0	0	
10	0	0	0	0	
11	0	0	0	0	
12	0	0	0	0	
13	0	0	0	0	
14	0	0	0	0	
15	0	0	0	0	
16	0	0	0	0	
17	0	0	0	0	
18	0	0	0	0	
19	0	0	0	0	
20	0	0	0	0	
21	0	0	0	0	
22	0	0	0	0	
23	0	0	0	0	
24	0	0	0	0	
25	0	0	0	0	
26	0	0	0	0	
27	0	0	0	0	
28	0	0	0	0	
29	6	0	0	0	
30	0	0	0	0	

Observer's Name (Print)	
Observer's Signature	Date
Organization	
Certified By	Date

VEOF 1.1

EPA
VISIBLE EMISSION OBSERVATION FORM 1

Form Number						Page 3	Of 6
Continued on VEO Form Number							

Method Used (Circle One)
Method 9 203A 203B Other: _____

Company Name		
Facility Name		
Street Address		
City	State	Zip

Process	Unit #	Operating Mode
Control Equipment		Operating Mode

Describe Emission Point	
Belt crusher to Plant	
Height of Emiss. Pt. Start End	Height of Emiss. Pt. Rel. to Observer Start End
Distance to Emiss. Pt. Start End	Direction to Emiss. Pt. (Degrees) Start End

Vertical Angle to Obs. Pt. Start End	Direction to Obs. Pt. (Degrees) Start End
Distance and Direction to Observation Point from Emission Point Start End	

Describe Emissions Start End	
Emission Color Start End	Water Droplet Plume Attached ☐ Detached ☐ None ☐

Describe Plume Background Start End		
Background Color Start End	Sky Conditions Start End	
Wind Speed Start End	Wind Direction Start End	
Ambient Temp. Start End	Wet Bulb Temp.	RH Percent

Source Layout Sketch

Draw North Arrow ☐ TN ☐ MN

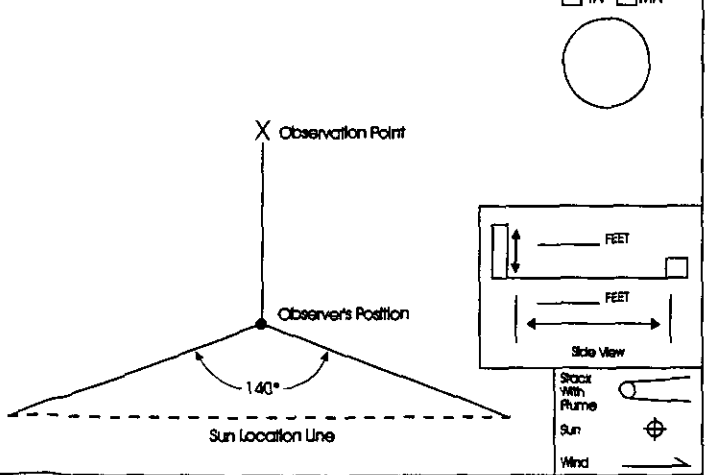

Longitude	Latitude	Declination

Observation Date	Time Zone	Start Time	End Time

Min \ Sec	0	15	30	45	Comments
1					
2					
3					
4					
5					
6					
7					
8					
9					
10					
11					
12					
13					
14					
15					
16					
17					
18					
19					
20					
21					
22					
23					
24					
25					
26					
27					
28					
29					
30					

Observer's Name (Print)	
Observer's Signature	Date
Organization	
Certified By	Date

Additional Information

VEOF 1.1

EPA
VISIBLE EMISSION OBSERVATION FORM 1

Form Number						Page 5	Of 6
Continued on VEO Form Number							

Method Used (Circle One): Method 9 | 203A | 203B | Other: _____

Company Name		
Facility Name		
Street Address		
City	State	Zip

Process	Unit #	Operating Mode
Control Equipment		Operating Mode

Describe Emission Point: Belt crusher to plant	
Height of Emiss. Pt. Start / End	Height of Emiss. Pt. Rel. to Observer Start / End
Distance to Emiss. Pt. Start / End	Direction to Emiss. Pt. (Degrees) Start / End

Vertical Angle to Obs. Pt. Start / End	Direction to Obs. Pt. (Degrees) Start / End
Distance and Direction to Observation Point from Emission Point Start	End

Describe Emissions Start	End
Emission Color Start / End	Water Droplet Plume Attached ☐ Detached ☐ None ☐

Describe Plume Background Start	End
Background Color Start / End	Sky Conditions Start / End
Wind Speed Start / End	Wind Direction Start / End
Ambient Temp. Start / End	Wet Bulb Temp. / RH Percent

Source Layout Sketch

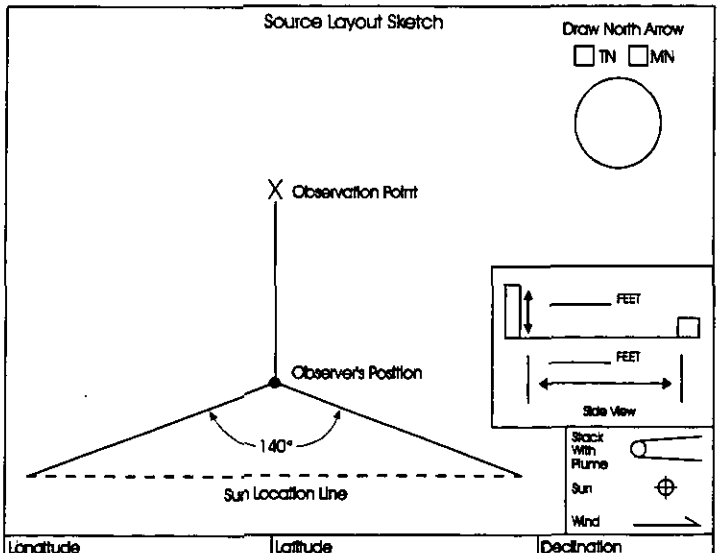

Longitude	Latitude	Declination

Additional Information

Observation Date	Time Zone	Start Time	End Time

Min \ Sec	0	15	30	45	Comments
1	0	0	0	0	
2	0	0	0	0	
3	0	0	0	0	
4	0	0	0	0	
5	0	0	0	0	
6	0	0	0	0	
7	0	0	0	0	
8	0	0	0	0	
9	0	0	0	0	
10	0	0	0	0	
11	0	0	0	0	
12	0	0	0	0	
13	0	0	0	0	
14	0	0	0	0	
15	0	0	0	0	
16	0	0	0	0	
17	0	0	0	0	
18	0	0	0	0	
19	0	0	0	0	
20	0	0	0	0	
21	0	0	0	0	plant shutdown 1:00 pm
22	0	0	0	0	plant startup 1:01 pm
23	0	0	0	0	
24	0	0	0	0	
25	0	0	0	0	
26	0	0	0	0	
27	0	0	0	0	
28	0	0	0	0	
29	0	0	0	0	
30	0	0	0	0	

Observer's Name (Print)	
Observer's Signature	Date
Organization	
Certified By	Date

EPA
VISIBLE EMISSION OBSERVATION FORM 1

Form Number						Page 4	Of 6
Continued on VEO Form Number							

Method Used (Circle One)
Method 9 203A 203B Other: _____

Company Name		
Facility Name		
Street Address		
City	State	Zip

Process	Unit #	Operating Mode
Control Equipment		Operating Mode

Describe Emission Point	
Belt conveyor to plant	
Height of Emiss. Pt. Start End	Height of Emiss. Pt. Rel. to Observer Start End
Distance to Emiss. Pt. Start End	Direction to Emiss. Pt. (Degrees) Start End

Vertical Angle to Obs. Pt. Start End	Direction to Obs. Pt. (Degrees) Start End
Distance and Direction to Observation Point from Emission Point Start End	

Describe Emissions Start End	
Emission Color Start End	Water Droplet Plume Attached ☐ Detached ☐ None ☐

Describe Plume Background Start End		
Background Color Start End	Sky Conditions Start End	
Wind Speed Start End	Wind Direction Start End	
Ambient Temp. Start End	Wet Bulb Temp.	RH Percent

Source Layout Sketch

Draw North Arrow ☐ TN ☐ MN

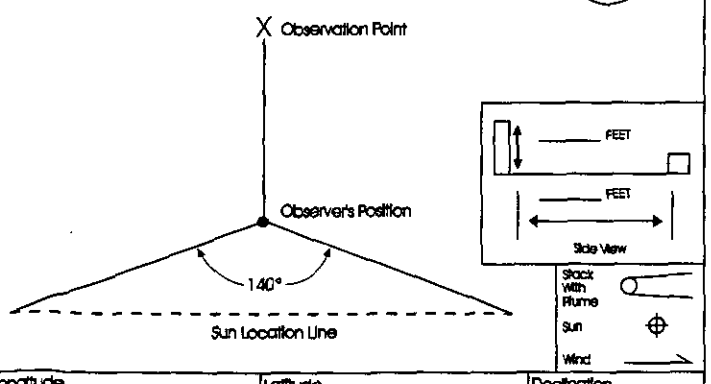

Longitude	Latitude	Declination

Observation Date	Time Zone	Start Time	End Time

Min \ Sec	0	15	30	45	Comments
1	0	0	0	0	
2	0	0	0	0	
3	0	0	0	0	
4	0	0	0	0	
5	0	0	0	0	
6	0	0	0	0	
7	0	0	0	0	
8	0	0	0	0	
9	0	0	0	0	
10	0	0	0	0	
11	0	0	0	0	
12	0	0	0	0	
13	0	0	0	0	
14	0	0	0	0	
15	0	0	0	0	
16	0	0	0	0	
17	0	0	0	0	
18	0	0	0	0	
19	0	0	0	0	
20	0	0	0	0	
21	0	0	0	0	
22	0	0	0	0	
23	0	0	0	0	
24	0	0	0	0	plant shutdown 10:07
25	0	0	0	0	plant startup 11:23
26	0	0	0	0	
27	0	0	0	0	
28	0	0	0	0	
29	0	0	0	0	
30	0	0	0	0	

Observer's Name (Print)	
Observer's Signature	Date
Organization	
Certified By	Date

ditional Information

VEOF 1.1

EPA
VISIBLE EMISSION OBSERVATION FORM 1

Form Number	Page 6	Of 6
Continued on VEO Form Number		

Method Used (Circle One): Method 9 | 203A | 203B | Other: _____

Company Name		
Facility Name		
Street Address		
City	State	Zip

Process	Unit #	Operating Mode
Control Equipment		Operating Mode

Describe Emission Point	
Height of Emiss. Pt. Start / End	Height of Emiss. Pt. Rel. to Observer Start / End
Distance to Emiss. Pt. Start / End	Direction to Emiss. Pt. (Degrees) Start / End
Vertical Angle to Obs. Pt. Start / End	Direction to Obs. Pt. (Degrees) Start / End
Distance and Direction to Observation Point from Emission Point Start / End	

Describe Emissions	
Start / End	
Emission Color Start / End	Water Droplet Plume Attached ☐ Detached ☐ None ☐

Describe Plume Background		
Start / End		
Background Color Start / End	Sky Conditions Start / End	
Wind Speed Start / End	Wind Direction Start / End	
Ambient Temp. Start / End	Wet Bulb Temp.	RH Percent

Source Layout Sketch

Draw North Arrow ☐ TN ☐ MN

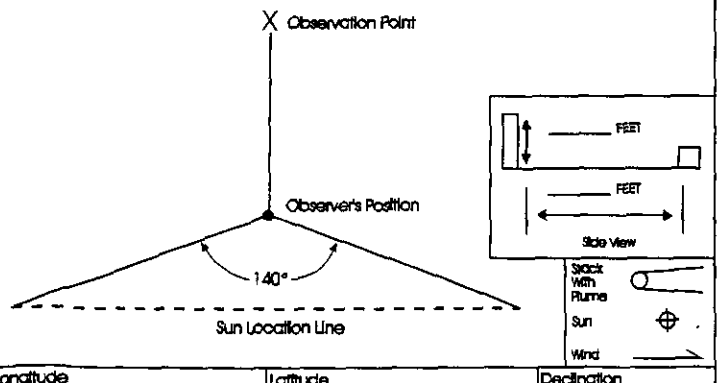

Longitude	Latitude	Declination

Additional Information: SPS 129

Observation Date	Time Zone	Start Time	End Time
Jan 31, 2017			1:48

Min \ Sec	0	15	30	45	Comments
1	0	0	0	0	
2	0	0	0	0	
3	0	0	0	0	
4	0	0	0	0	
5	0	0	0	0	
6	0	0	0	0	
7	0	0	0	0	
8	0	0	0	0	
9	0	0	0	0	
10	0	0	0	0	
11	0	0	0	0	
12	0	0	0	0	
13	0	0	0	0	
14	0	0	0	0	
15	0	0	0	0	
16	0	0	0	0	
17	0	0	0	0	
18	0	0	0	0	
19	0	0	0	0	
20	0	0	0	0	
21	0	0	0	0	
22	0	0	0	0	
23	0	0	0	0	
24	0	0	0	0	plant shutdown 1:39 pm
25	0	0	0	0	plant startup 1:43
26	0	0	0	0	
27	0	0	0	0	
28	0	0	0	0	
29	0	0	0	0	
30	0	0	0	0	

Observer's Name (Print)	Derrick Jones	
Observer's Signature	Derrick Jones	Date Jan 31, 2017
Organization	HMG Engineers Inc.	
Certified By		Date

VEOF 1.1

EPA
VISIBLE EMISSION OBSERVATION FORM 1

Form Number						Page	Of
Continued on VEO Form Number							

Method Used (Circle One): Method 9 (circled) 203A 203B Other: _____

Company Name		
Facility Name		
Street Address		
City	State	Zip

Process	Unit #	Operating Mode
Control Equipment		Operating Mode

Describe Emission Point: Breaker reject

Height of Emiss. Pt. Start End	Height of Emiss. Pt. Rel. to Observer Start End
Distance to Emiss. Pt. Start End	Direction to Emiss. Pt. (Degrees) Start End

Vertical Angle to Obs. Pt. Start End	Direction to Obs. Pt. (Degrees) Start End
Distance and Direction to Observation Point from Emission Point Start	End

Describe Emissions Start	End
Emission Color Start End	Water Droplet Plume Attached ☐ Detached ☐ None ☐

Describe Plume Background Start	End	
Background Color Start End	Sky Conditions Start End	
Wind Speed Start End	Wind Direction Start End	
Ambient Temp. Start End	Wet Bulb Temp.	RH Percent

Source Layout Sketch

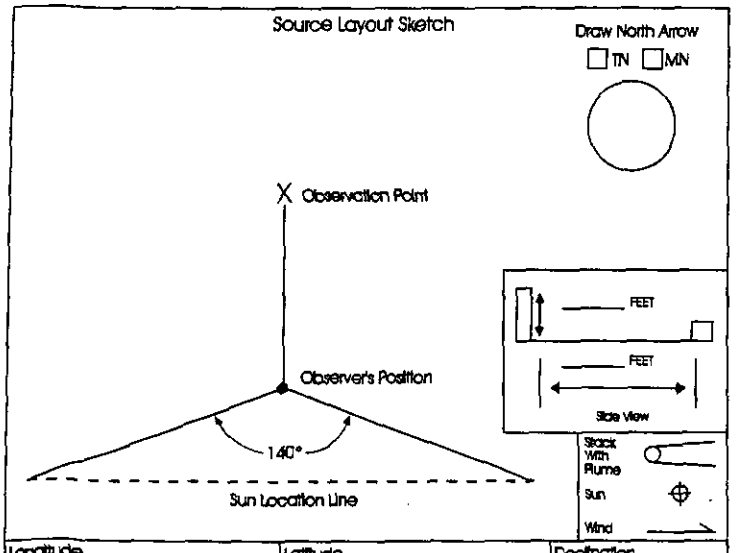

Longitude	Latitude	Declination

Additional Information

Observation Date	Time Zone	Start Time	End Time
Jan 31, 2017		9:07	9:37

Min \ Sec	0	15	30	45	Comments
1	0	0	0	0	
2	0	0	0	0	
3	0	0	0	0	
4	0	0	0	0	
5	0	0	0	0	
6	0	0	0	0	
7	0	0	0	0	
8	0	0	0	0	
9	0	0	0	0	
10	0	0	0	0	
11	0	0	0	0	
12	0	0	0	0	
13	0	0	0	0	
14	0	0	0	0	
15	0	0	0	0	
16	0	0	0	0	
17	0	0	0	0	
18	0	0	0	0	
19	0	0	0	0	
20	0	0	0	0	
21	0	0	0	0	
22	0	0	0	0	
23	0	0	0	0	
24	0	0	0	0	
25	0	0	0	0	
26	0	0	0	0	
27	0	0	0	0	
28	0	0	0	0	
29	0	0	0	0	
30	0	0	0	0	

Observer's Name (Print): Darrick Jones	
Observer's Signature: Darrick Jones	Date: Jan 31 2017
Organization	
Certified By	Date

VEOF 1.1

Appendix B – Method 9 Certification

Environmental Protection Agency
State of Illinois

This Certifies That

Kirschbaum, Tim

Has Completed the Course

Evaluation of Visible Emissions

16-10-034	October 12, 2016
Certification Number	*Certification Date*
Julie K Armitage	Alec Messina
Chief, Bureau of Air	Director

Environmental Protection Agency
State of Illinois

This Certifies That

Jones, Derick

Has Completed the Course

Evaluation of Visible Emissions

16-10-033	October 12, 2016
Certification Number	*Certification Date*
Julie K Armitage	Alec Messina
Chief, Bureau of Air	Director

Appendix C – Process Flow Diagram

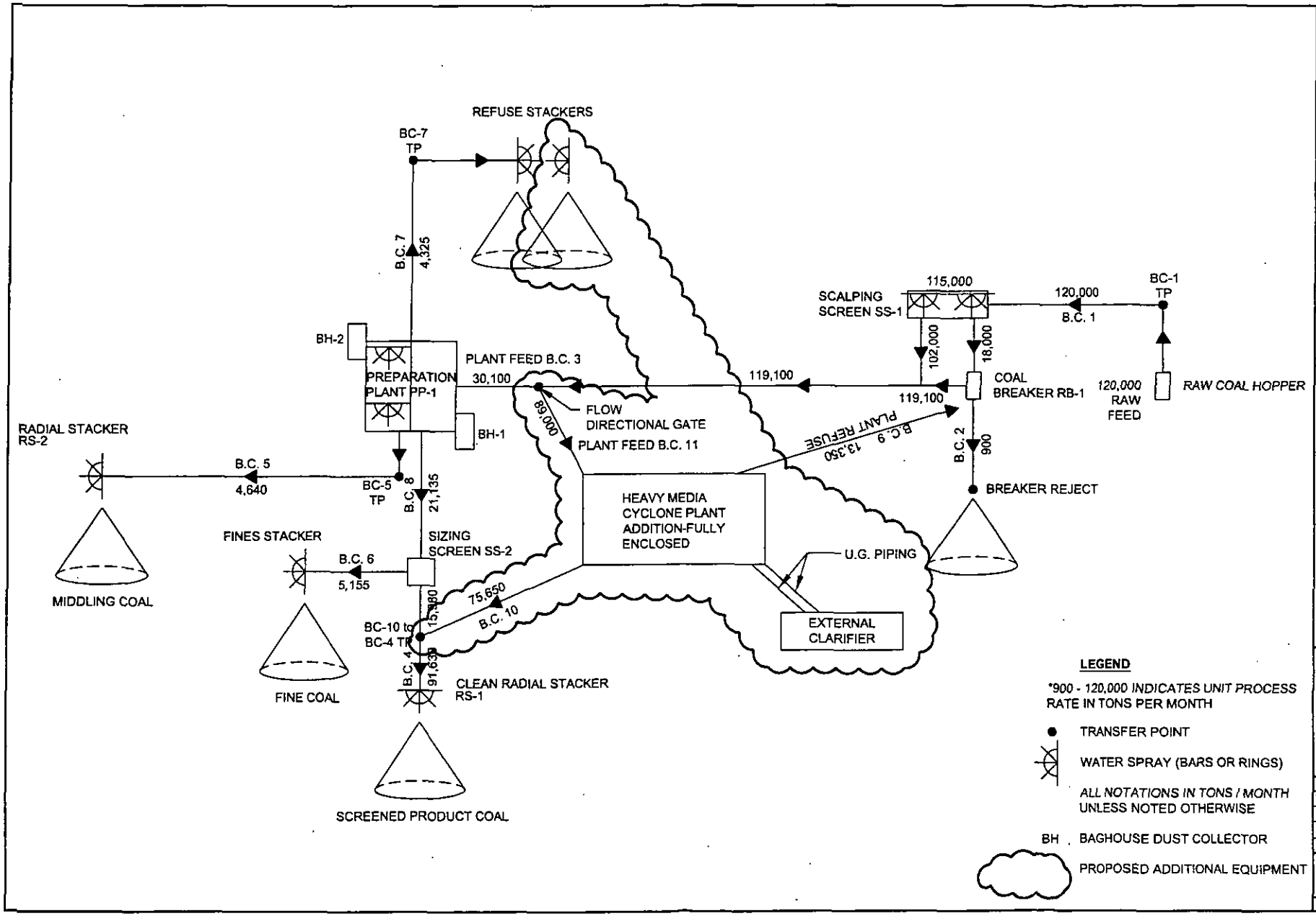
REFUSE STACKERS
BC-7 TP
B.C. 7
4,325
BH-2
PREPARATION PLANT PP-1
BH-1
PLANT FEED B.C. 3
30,100
FLOW DIRECTIONAL GATE
PLANT FEED B.C. 11
89,000
RADIAL STACKER RS-2
B.C. 5
4,640
BC-5 TP
B.C. 8
21,135
MIDDLING COAL
FINES STACKER
B.C. 6
5,155
SIZING SCREEN SS-2
FINE COAL
BC-10 to BC-4 TP
B.C. 4
91,639
75,650
B.C. 10
CLEAN RADIAL STACKER RS-1
SCREENED PRODUCT COAL
HEAVY MEDIA CYCLONE PLANT ADDITION-FULLY ENCLOSED
U.G. PIPING
EXTERNAL CLARIFIER
B.C. 9
13,350
PLANT REFUSE
SCALPING SCREEN SS-1
115,000
102,000
18,000
119,100
119,100
COAL BREAKER RB-1
B.C. 2
900
BREAKER REJECT
120,000
B.C. 1
BC-1 TP
120,000 RAW FEED
RAW COAL HOPPER
LEGEND
*900 - 120,000 INDICATES UNIT PROCESS RATE IN TONS PER MONTH
TRANSFER POINT
WATER SPRAY (BARS OR RINGS)
ALL NOTATIONS IN TONS / MONTH UNLESS NOTED OTHERWISE
BH BAGHOUSE DUST COLLECTOR
PROPOSED ADDITIONAL EQUIPMENT
REVISIONS
Rev. 1 11/21/2004
Rev. 2 04/14/2005
Rev. 3 06/21/2005
Rev. 4 02/21/2061
PLOT DATE 02/21/2061
DWG. FILE
PROCESS FLOW DIAGRAM
EAGLE RIVER COAL PREPARATION PLANT
SALINE COUNTY, ILLINOIS
HMG ENGINEERS, INC.
1032 N. 6TH STREET
MURPHYSBORO, ILLINOIS 62966
(618) 684-9355 WWW.HMGENGINEERS.COM
SURVEY
DESIGN -
DRAWN -
CHECKED -
DATE -
SHEET 1
JOB NO. -

EAGLE RIVER COAL, LLC

P.O. Box 444 • 29 West Raymond St. • Harrisburg, IL 62946 • Ph. 618-252-0490 • Fax 618-253-4300

Illinois Environmental Protection Agency
Division of Air Pollution Control
Compliance Section (#40)
P.O. Box 19276
Springfield, IL 62794-9276

RECEIVED
MAR 17 2017
AIR ENFORCEMENT BRANCH,
U.S. EPA REGION 5

Illinois Environmental Protection Agency
Division of Air Pollution Control
2009 Mall Street
Collinsville, IL 62234

U.S. Environmental Protection Agency
Region V Air and Radiation Division
77 West Jackson Boulevard
Chicago, IL 60604-3590

Subj: Eagle River Coal, LLC
Coal Preparation Plant Lifetime Operating Permit Compliance
Permit I.D. No.: 165806AAA

Ladies and Gentlemen:

In accordance with terms of the subject permit, including references to Federal Regulations therein, please find enclosed copy of opacity testing results prepared by our consulting engineers, HMG Engineers, Inc.

Please direct any questions regarding this report to Gary Raines, P.E. of the Murphysboro office of HMG at 618-684-9355 or email at .

Thank you.

Ray Vanover

Ray Vanover
EVP Eagle River Coal LLC

Distribution: IEPA, Springfield (1 copy)
IEPA, Collinsville (1 copy)
USEPA, Chicago (2 copies)

Opacity Test Report

Eagle River Coal, LLC
Coal Preparation Plant
3880 Highway 145 South
Harrisburg, Illinois 62946

Applicable Permit:
Illinois Environmental Protection Agency
Lifetime Operating Permit – NSPS Source
I.D. No.: 165806AAA

Prepared For:

Eagle River Coal, LLC
29 West Raymond Street
Harrisburg, Illinois 62946

Prepared By:

HMG Engineers Inc.
1032 N. 6th Street
Murphysboro, Illinois 62966

February 2017

Table of Contents

Introduction

Summary of Results

Test Description and Execution

Appendix A – Field Data Sheets

Appendix B – Method 9 Certification

Appendix C – Process Flow Diagram

Introduction

Eagle River Coal, LLC is a surface coal mining operation located in Saline County, Illinois. The mine consists of an open pit where the coal seams are uncovered by various excavation machinery. Exposed coal seams are then removed and hauled to the processing plant/stockpile area for crushing, screening and removal of various impurities to attain a marketable product.

Operation of the preparation plant is permitted under the Lifetime Operating Permit I.D. No. 165806AAA issued June 24, 2014 by the Illinois Environmental Protection Agency. The various operational components of the plant are listed in the referenced permit and identified as emission sources relative to air pollution.

This report and the testing documented herein was authorized by Eagle River Coal, LLC and was conducted by Tim Kirschbaum and Derick Jones of HMG Engineers Inc. using the Environmental Protection Agency (EPA) Method 9 in 40 CFR Part 60 Subpart Y for the purpose of determining the opacity of outside emissions at Eagle River Mine No. 1 preparation plant. Technical matters, calculations, descriptions, and conclusions associated with this work are considered confidential, the details of which will only be released to the authorized personnel of Eagle River Coal, LLC.

Summary of Results

Emissions Testing

Results of the testing are presented in Table I, Opacity Emissions Data Eagle River Mine #1. All field data sheets are included in Appendix A, Field Data Sheets. The applicable opacity allowed by the facilities permit is 30% for the various components making up the preparation plant operation.

Process Monitoring

Sources sampled included the coal and refuse stockpiles, raw coal truck dump, hopper, conveyors, breaker, screens, preparation plant. All monitored processes are listed in Table 1.

Test Description and Execution

Monitored Processes

Most of the sampling points were previously identified within the IEPA permit. After review of the mine with plant personnel, a total of 15 sampling points were identified. This includes the 14

process listed on the Lifetime Operating Permit. The preparation plant Process Flow Diagram included herewith as Appendix C illustrates the various components in the process at the mine.

Sampling Methods

Sampling was conducted in accordance with 40 CFR Part 60 Appendix A Method 9 (visual determination of the opacity of emissions form stationary sources). The sampling periods varied with the equipment being tested. The truck dump and loader dump were tested according to Subpart Y 60.255 (h)(l)(i) and (ii). This sampling method concludes that there were three separate dumps tested by averaging all 20-second opacity readings. All of the coal processing and cleaning equipment housed within the preparation plant was tested as one unit, per 60.255 (c). Several of the emissions points were only sampled for 30 minutes instead of 60 minutes due to opacity readings being less than one-half of the opacity limit , per 60.257 (a)(1). There were up to three emissions points read concurrently as long as all three points could be read within a 70-degree viewing angle with the proper sun and positioning.

Two (2) new conveyor belts constructed under construction permit issued December 15, 2015 were monitored for new-source compliance for three (3) hour – observation time period.

Due to the relative locations of some equipment and safety concerns for the observer, Method 9 observation criteria was unable to be followed exactly for some of the sampling points. It was, however, followed as closely as possible. Appendix A documents the actual position of the observer relative to the source, wind direction, and sun position. The opacity readings taken were not significantly impacted by the minor deviations from Method 9 with respect to the observers' position.

Table 1 : Opacity Emissions Data
Eagle River Mine #1

Date	Emission Point - ID	Parameters						
		Start Time	End Time	Net Test Time *(minutes)*	Minimum Opacity Observation (%)	Maximum Opacity Observation (%)	Average Opacity Highest *Period* (%)	Average Opacity (%)
12/28/16	Truck Dump TD	13:06	13:35	30	0	10	3.75	1.00
1/31/17	Loader Dump LD	8:32	8:40	7	0	0	0.00	0.00
1/31/17	Raw Coal Hopper	8:43	9:03	20	0	0	0.00	0.00
12/28/16	Belt Feed Conveyor B.F.1 - B.C.1	12:30	13:00	30	0	0	0.00	0.00
12/15/16	Scalping Screen S.S. 1	13:08	13:38	30	0	0	0.00	0.00
12/15/16	Plant Feed Belt B.C.3	14:02	14:32	30	0	10	8.75	1.67
1/31/17	Breaker Reject Belt B.C.2	9:07	9:37	30	0	0	0.00	0.00
1/31/17	Preparation Plant PP-1	No Longer in Service						
1/31/17	Middling Coal Radial Stacker Belt B.C. 5 and RS-2	No Longer in Service						
1/31/17	Fine Coal Stacker Belt B.C.6	No Longer in Service						
1/31/17	Plant Refuse Belt & Refuse Stacker B.C.7	No Longer in Service						
1/31/17	Plant Feed Belt to Screen SS-2 B.C.8	No Longer in Service						
12/15/16	Product Coal Radial Stacker and Belt B.C.4 and RS-1	7:53	8:24	30	0	0	0.00	0.00
12/15/16	Sizing Screen SS-2	8:30	9:00	30	0	0	0.00	0.00
12/15/17	New Preparation Plant Product Belt B.C. 10 to Sizing Screen SS2	9:06	12:06	180	0	5	1.25	0.19
1/31/17	Middling Coal Pile	No Longer in Service						
1/31/17	Fines Coal Pile	No Longer in Service						
12/15/16	Product Coal Pile	7:53	8:24	30	0	0	0.00	0.00
1/31/17	B.C. 3 Split to New Plant Feed B.C. 11	9:59	13:48	180	0	0	0.00	0.00
12/28/16	Breaker Reject Coal Pile	12:28	12:58	30	0	15	7.50	1.38
1/31/17	Coal Breaker	9:07	9:37	30	0	0	0.00	0.00
12/28/16	Raw Coal Pile	13:06	13:35	30	0	0	0.00	0.00
Average Opacity Highest Period							**1.42**	
Average Opacity (%)								**0.28**

* The Loader dump reading were taken on three separate dumps into the raw coal hopper.

** Truck Dump & Raw Pile read same time - trucks end dumping reading taken on 5 trucks ove the 30 minute observation period. Truck dump read for 20 second on 5 second interval.

Appendix A – Field Data Sheets

Plant Feed Belt to Sizing Screen
BC 10
SS2

EPA
VISIBLE EMISSION OBSERVATION FORM 1

Form Number	Page	Of
301	1	6

Continued on VEO Form Number: 302

Method Used (Circle One): Method 9 (circled) 203A 203B Other: _____

Company Name: Eagle River Coal
Facility Name: New Plant
Street Address: 3500 Hwy 145
City: Harrisburg | State: IL | Zip: 62946

Process: Transfer Point | Unit #: BC-10 | Operating Mode: Running
Control Equipment | Operating Mode

Describe Emission Point: Plant Clean Coal to Belt Conveyor BC-10 + Top of SS-2
Height of Emiss. Pt. Start End | Height of Emiss. Pt. Rel. to Observer Start End
Distance to Emiss. Pt. Start End | Direction to Emiss. Pt. (Degrees) Start End

Vertical Angle to Obs. Pt. Start End | Direction to Obs. Pt. (Degrees) Start End
Distance and Direction to Observation Point from Emission Point Start End

Describe Emissions Start End
Emission Color Start End | Water Droplet Plume Attached ☐ Detached ☐ None ☒

Describe Plume Background Start: Trees + Sky End
Background Color Start: Brown End | Sky Conditions Start: Overcast End
Wind Speed Start: 0 End | Wind Direction Start End
Ambient Temp. Start: 19°F End | Wet Bulb Temp. | RH Percent

Source Layout Sketch
Draw North Arrow ☐ TN ☐ MN

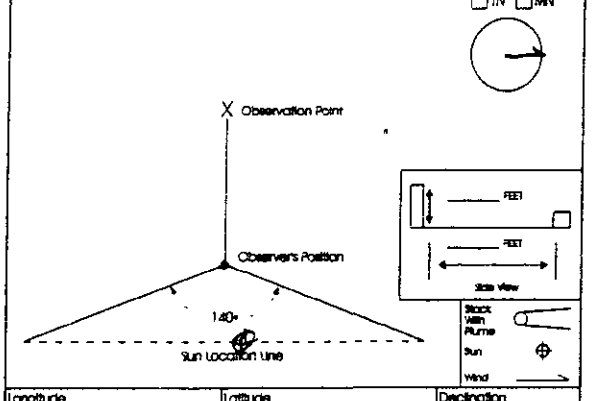

Longitude | Latitude | Declination

Additional Information

Observation Date	Time Zone	Start Time	End Time
12-15-16	Central	9:06	

Min \ Sec	0	15	30	45	Comments
1	0	0	0	0	
2	0	0	0	0	
3	0	0	0	0	
4	0	0	0	0	
5	0	0	0	0	
6	0	0	0	0	
7	0	0	0	0	
8	0	0	0	0	
9	0	0	0	0	
10	0	0	0	0	
11	0	0	0	0	
12	0	0	0	0	
13	0	0	0	0	
14	0	0	0	0	
15	0	0	0	0	
16	0	0	0	0	
17	0	0	0	0	
18	0	0	0	0	
19	0	0	0	0	
20	0	0	0	0	
21	0	0	0	0	
22	0	0	0	0	
23	0	0	0	0	
24	0	0	0	0	
25	0	0	0	0	
26	0	0	0	0	
27	0	0	0	0	
28	0	0	0	0	
29	0	0	0	0	
30	0	0	0	0	

Observer's Name (Print): Timothy D. Kirschbaum
Observer's Signature: Tim Kirschbaum | Date: 12-15-16
Organization: HMG Engineers Inc
Certified By: EPA | Date: 10-12-16

VEOF1.1

EPA
VISIBLE EMISSION OBSERVATION FORM 1

Form Number			3	0	2	Page 2	Of 6
Continued on VEO Form Number			3	0	3		

Method Used (Circle One): Method 9 · 203A · 203B · Other: _____

Company Name: Eagle River Gas		
Facility Name		
Street Address		
City	State: IL	Zip

Process: Transfer at BC-10 Plant 2	Unit #: BC10	Operating Mode: Running
Control Equipment		Operating Mode

Describe Emission Point	
Height of Emiss. Pt. Start / End	Height of Emiss. Pt. Rel. to Observer Start / End
Distance to Emiss. Pt. Start / End	Direction to Emiss. Pt. (Degrees) Start / End
Vertical Angle to Obs. Pt. Start / End	Direction to Obs. Pt. (Degrees) Start / End
Distance and Direction to Observation Point from Emission Point Start / End	
Describe Emissions Start / End	
Emission Color Start / End	Water Droplet Plume: Attached ☐ Detached ☐ None ☐
Describe Plume Background Start / End	
Background Color Start / End	Sky Conditions Start Overcast End
Wind Speed Start / End	Wind Direction Start / End
Ambient Temp. Start / End	Wet Bulb Temp. / RH Percent

Source Layout Sketch

Draw North Arrow: ☐ TN ☐ MN

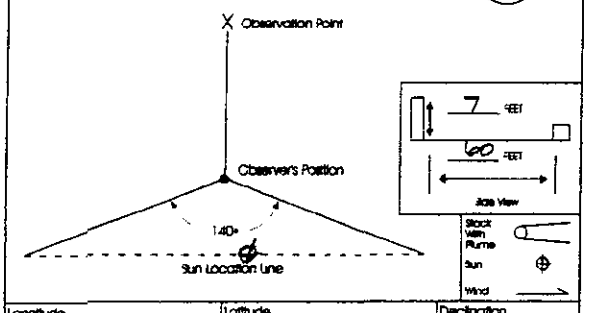

Longitude	Latitude	Declination

Additional Information: 3' Drop To Belt

Observation Date	Time Zone	Start Time	End Time
12-15-16	Central		

Min \ Sec	0	15	30	45	Comments
1	0	0	0	5	
2	0	0	5	0	
3	0	0	0	0	
4	0	0	0	0	
5	0	0	0	0	
6	0	0	0	0	
7	0	0	0	0	
8	0	0	0	0	
9	0	0	5	0	
10	0	0	0	0	
11	0	5	0	0	
12	0	0	0	0	
13	0	0	0	0	
14	0	0	0	0	
15	0	0	0	0	
16	0	0	0	0	
17	0	0	0	0	
18	0	0	0	0	
19	0	0	0	0	
20	0	0	0	0	
21	0	0	0	0	
22	0	0	0	0	
23	0	0	0	0	
24	0	0	0	0	
25	0	0	0	0	
26	0	0	0	0	
27	0	0	0	0	
28	0	0	0	0	
29	0	0	0	0	
30	0	0	0	0	

Observer's Name (Print): Timothy D Kirschbaum	
Observer's Signature: [signature]	Date: 12-15-16
Organization: HMG Engineers	
Certified By: IEPA	Date: 10-12-16

VEOF1.1

EPA
VISIBLE EMISSION OBSERVATION FORM 1

Form Number	3	0	3	Page 3	Of 4
Continued on VEO Form Number			3	0	4

Method Used (Circle One): Method 9 | 203A | 203B | Other: _____

Company Name	Eagle River Con
Facility Name	Plant
Street Address	
City / State / Zip	

Process: Transfer Pt to BC-10	Unit #: BC10	Operating Mode: Running-full
Control Equipment		Operating Mode

Describe Emission Point:

Height of Emiss. Pt. Start: 7 End:	Height of Emiss. Pt. Rel. to Observer Start: End:
Distance to Emiss. Pt. Start: End:	Direction to Emiss. Pt. (Degrees) Start: End:
Vertical Angle to Obs. Pt. Start: End:	Direction to Obs. Pt. (Degrees) Start: 270 End:
Distance and Direction to Observation Point from Emission Point Start: 0 End:	

Describe Emissions: Start: End:

Emission Color Start: End:	Water Droplet Plume: Attached ☐ Detached ☐ None ☒

Describe Plume Background: Start: Trees End:

Background Color Start: Brown End:	Sky Conditions Start: Overcast End:
Wind Speed Start: 0 End: 0	Wind Direction Start: — End:
Ambient Temp. Start: 18° End:	Wet Bulb Temp. / RH Percent

Source Layout Sketch

Draw North Arrow: ☐ TN ☐ MN

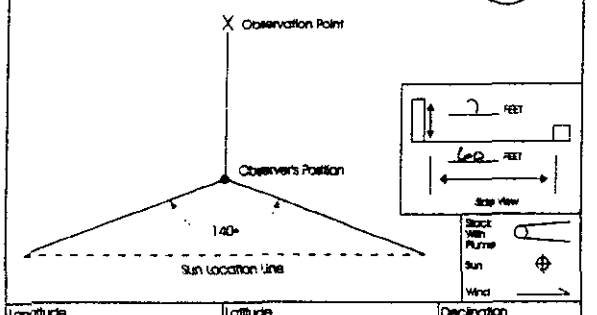

Longitude	Latitude	Declination

Additional Information:

Observation Date	Time Zone: Central	Start Time	End Time

Min \ Sec	0	15	30	45	Comments
1	0	0	0	0	
2	0	0	0	0	
3	0	0	0	0	
4	0	0	0	0	
5	0	0	0	0	
6	0	0	0	0	
7	0	0	0	0	
8	0	0	0	0	
9	0	0	0	0	
10	0	0	0	0	
11	0	0	0	0	
12	0	0	0	0	
13	0	0	0	0	
14	0	0	0	0	
15	0	0	0	0	
16	0	0	0	0	
17	0	0	0	0	
18	0	0	0	0	
19	0	0	0	0	
20	0	0	0	0	
21	0	0	0	0	
22	0	0	0	0	
23	0	0	0	0	
24	0	0	0	0	
25	0	0	0	0	
26	0	0	0	0	
27	5	0	0	0	
28	0	0	0	0	
29	0	0	0	0	
30	0	0	0	0	

Observer's Name (Print)	Timothy Kirschbaum
Observer's Signature	Date: 12-15-16
Organization	HMS Engineers Inc.
Certified By: IEPA	Date: 10-12-16

VEOF1.1

EPA
VISIBLE EMISSION OBSERVATION FORM 1

Form Number	Page	Of
3 0 4	4	4
Continued on VEO Form Number		3 0 5

Method Used (Circle One): ~~Method 9~~ 203A 203B Other: _____

Company Name	Eagle River Coal
Facility Name	PLANT
Street Address	
City	
State	IL
Zip	

Process: Transfer Pt. - Plant to Belt	Unit #: BC-10	Operating Mode: Running Full
Control Equipment		Operating Mode

Describe Emission Point: PLANT Belt - Clean to ~3' drop open top Shuttle to BC-10 belt

Height of Emiss. Pt. Start 7 End	Height of Emiss. Pt. Rel. to Observer Start 2 End 2
Distance to Emiss. Pt. Start 60 End	Direction to Emiss. Pt. (Degrees) Start 270 End

Vertical Angle to Obs. Pt. Start End	Direction to Obs. Pt. (Degrees) Start End
Distance and Direction to Observation Point from Emission Point Start	End

Describe Emissions Start	End
Emission Color Start End	Water Droplet Plume Attached ☐ Detached ☐ None ☒

Describe Plume Background Start	End
Background Color Start End	Sky Conditions Start Overcast End
Wind Speed Start End	Wind Direction Start End
Ambient Temp. Start End	Wet Bulb Temp. / RH Percent

Source Layout Sketch

Draw North Arrow ☐ TN ☐ MN

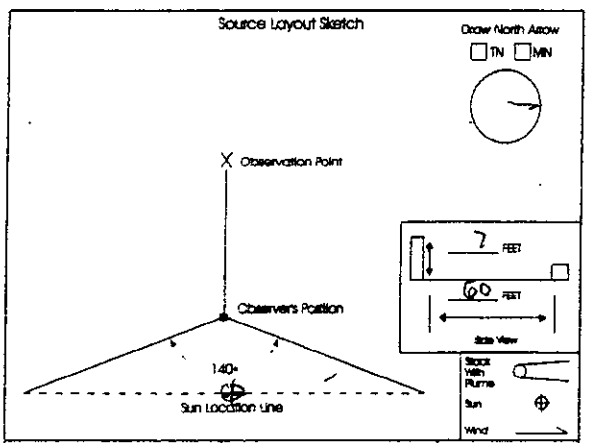

Longitude	Latitude	Declination

Additional Information

Observation Date	Time Zone	Start Time	End Time
12-15-16	Central		

Min \ Sec	0	15	30	45	Comments
1	0	0	0	0	
2	0	0	0	0	
3	0	0	0	0	
4	0	0	0	0	
5	0	0	0	0	
6	0	0	0	0	
7	0	0	0	0	
8	0	0	0	0	
9	0	0	0	0	
10	0	0	0	0	
11	0	0	0	0	
12	0	0	0	0	
13	0	0	0	0	
14	0	0	0	0	
15	0	0	0	0	
16	0	0	0	0	
17	0	0	0	0	
18	0	0	0	0	
19	0	0	0	0	
20	0	0	0	0	
21	0	0	0	0	
22	0	0	0	0	
23	0	0	0	0	
24	0	0	0	0	
25	0	0	0	0	
26	0	0	0	0	
27	0	0	0	0	
28	0	0	0	0	
29	0	0	0	0	
30	0	0	0	0	

Observer's Name (Print)	Timothy Kirschbaum
Observer's Signature	[signature]
Date	12-15-16
Organization	HMG Engineers
Certified By	IEPA
Date	10-12-16

VEOF1.1

EPA
VISIBLE EMISSION OBSERVATION FORM 1

Form Number	305	Page 5 Of 6
Continued on VEO Form Number	306	

Method Used (Circle One): Method 9 | 203A | 203B | Other: _____

Company Name	Eagle River Coal
Facility Name	PLANT
Street Address	
City	
State	IL
Zip	

Process: Transfer Point	Unit #: BC-10	Operating Mode: Running
Control Equipment		Operating Mode

Describe Emission Point:

Height of Emiss. Pt. Start / End	Height of Emiss. Pt. Rel. to Observer Start / End
Distance to Emiss. Pt. Start / End	Direction to Emiss. Pt. (Degrees) Start / End

Vertical Angle to Obs. Pt. Start / End	Direction to Obs. Pt. (Degrees) Start 220° End
Distance and Direction to Observation Point from Emission Point Start 0 End	

Describe Emissions: Start / End

Emission Color Start / End	Water Droplet Plume: Attached ☐ Detached ☐ None ☒

Describe Plume Background Start: Trees	End
Background Color Start: Brown	End
Sky Conditions Start: Overcast	End
Wind Speed Start: 0	End
Wind Direction Start	End
Ambient Temp. Start: 18°F	End
Wet Bulb Temp.	RH Percent

Source Layout Sketch

Draw North Arrow: ☐ TN ☐ MN

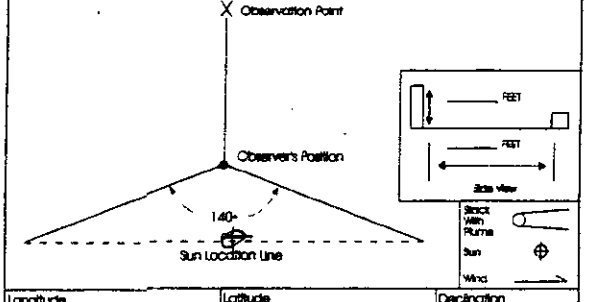

Longitude	Latitude	Declination

Additional Information:

Observation Date	Time Zone	Start Time	End Time
12-15-16	Central		

Min \ Sec	0	15	30	45	Comments
1	0	0	0	0	
2	0	0	0	0	
3	0	0	0	0	
4	0	0	0	0	
5	0	0	0	0	
6	0	0	0	0	
7	0	0	0	0	
8	0	0	0	0	
9	0	0	0	0	
10	0	0	0	0	
11	0	0	0	0	
12	0	0	0	0	
13	0	0	0	0	
14	0	0	0	0	
15	0	0	0	0	
16	0	0	0	0	
17	0	0	0	0	
18	0	0	0	0	
19	0	0	0	0	
20	0	0	0	0	
21	0	0	0	0	
22	0	0	0	0	
23	0	0	0	0	
24	0	0	0	0	
25	0	0	0	0	
26	0	0	0	0	
27	0	0	0	0	
28	0	0	0	0	
29	0	0	0	0	
30	0	0	0	0	

Observer's Name (Print)	Timothy Kirschbaum
Observer's Signature	[signature]
Date	12-15-16
Organization	MMG Engineer
Certified By	IEPA
Date	10-12-16

EPA
VISIBLE EMISSION OBSERVATION FORM 1

Form Number	3 0 6	Page 6	Of 6
Continued on VEO Form Number			

Method Used (Circle One): Method 9 (circled) 203A 203B Other: _____

Company Name	Eagle River Coal
Facility Name	Plant
Street Address	
City	State / Zip

Process	Unit #	Operating Mode
Transfer Point Plant to Silo	SC10	Running
Control Equipment		Operating Mode

Describe Emission Point: Plant Clean Coal

Height of Emiss. Pt. Start / End	Height of Emiss. Pt. Rel. to Observer Start / End
Distance to Emiss. Pt. Start / End	Direction to Emiss. Pt. (Degrees) Start / End
Vertical Angle to Obs. Pt. Start / End	Direction to Obs. Pt. (Degrees) Start / End
Distance and Direction to Observation Point from Emission Point Start / End	

Describe Emissions: Start / End

Emission Color Start / End	Water Droplet Plume Attached ☐ Detached ☐ None ☐

Describe Plume Background: Start / End

Background Color Start / End	Sky Conditions Start / End
Wind Speed Start / End	Wind Direction Start / End
Ambient Temp. Start / End	Wet Bulb Temp. / RH Percent

Source Layout Sketch

Draw North Arrow ☐ TN ☐ MN

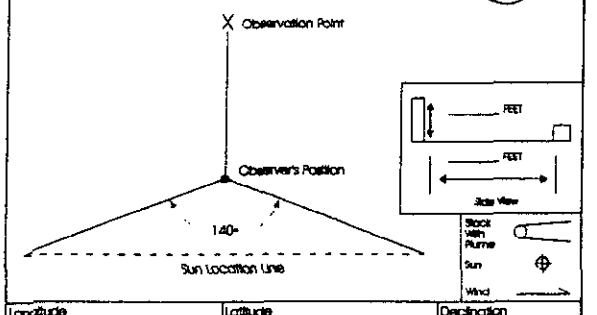

Longitude	Latitude	Declination

Additional Information:

Observation Date	Time Zone	Start Time	End Time
12-15-16	Central		12: pm

Min \ Sec	0	15	30	45	Comments
1	0	0	0	0	
2	0	0	0	0	
3	0	0	0	0	
4	0	0	0	0	
5	0	0	0	0	
6	0	0	0	0	
7	0	0	0	0	
8	0	0	0	0	
9	0	0	0	0	
10	0	0	0	0	
11	0	0	0	5	
12	0	0	0	0	
13	0	0	0	0	
14	0	0	0	0	
15	0	0	0	0	
16	0	0	0	0	
17	0	0	0	0	
18	0	0	0	0	
19	0	0	0	0	
20	0	0	0	0	
21	0	5	0	0	
22	0	0	0	0	
23	0	0	0	0	
24	0	0	0	0	
25	0	0	0	0	
26	0	0	0	0	
27	0	0	0	0	
28	0	0	0	0	
29	0	0	0	0	
30	0	0	0	0	

Observer's Name (Print)	Timothy Kirschbaum
Observer's Signature	TJ Kirschbaum
Date	12-15-16
Organization	HMG Engineers Inc
Certified By	IEPA
Date	10-12-16

VEOF1.1

Breaker Project Pile

EPA
VISIBLE EMISSION OBSERVATION FORM 1

Form Number	401	Page 1	Of 1
Continued on VEO Form Number			

Method Used (Circle One): Method 9 | 203A | 203B | Other: _____

Company Name	Eagle River Coal
Facility Name	Eagle River Coal - Mine #1
Street Address	3580 Hwy 145
City	Harrisburg
State	IL
Zip	62946

Process	Refuse Belt Discharge	Unit # BC-2	Operating Mode Running
Control Equipment		Operating Mode	

Describe Emission Point: Refuse Belt To Ground B.C #9 To Refuse Pile

Height of Emiss. Pt. Start 30 End	Height of Emiss. Pt. Rel. to Observer Start 30 End
Distance to Emiss. Pt. Start 150 End	Direction to Emiss. Pt. (Degrees) Start S End
Vertical Angle to Obs. Pt. Start End	Direction to Obs. Pt. (Degrees) Start 180 End
Distance and Direction to Observation Point from Emission Point Start 0 End	

Describe Emissions Start Coal Dust End	
Emission Color Start Black End	Water Droplet Plume Attached ☐ Detached ☐ None ☒

Describe Plume Background Start Sky End		
Background Color Start Gray End	Sky Conditions Start Overcast End	
Wind Speed Start 2 End W	Wind Direction Start 2 End W	
Ambient Temp. Start 18° End	Wet Bulb Temp.	RH Percent

Source Layout Sketch

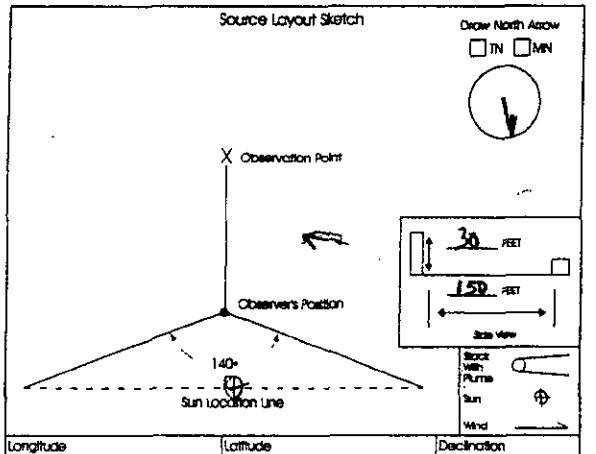

Longitude	Latitude	Declination

Additional Information:

Observation Date	Time Zone	Start Time	End Time
12-15-16	Cst	12:28 pm	12:58.

Min \ Sec	0	15	30	45	Comments
1	0	0	0	0	
2	0	10	0	0	
3	0	0	5	0	
4	0	5	15	5	
5	0	15	10	5	
6	10	5	0	0	
7	0	0	0	10	
8	0	0	0	0	
9	0	0	15	0	
10	0	0	0	5	
11	0	0	5	5	
12	0	0	5	0	
13	0	0	0	0	
14	0	0	0	0	
15	5	0	0	0	
16	0	0	0	0	
17	0	0	0	0	
18	0	5	0	0	
19	0	0	0	0	
20	0	0	0	0	
21	0	0	0	0	
22	0	0	0	0	
23	0	0	5	0	
24	5	0	10	0	
25	0	0	0	0	
26	0	0	0	0	
27	0	0	0	0	
28	0	0	0	0	
29	0	0	0	0	
30	5	0	0	0	

Observer's Name (Print)	Timothy D. Kirschbaum
Observer's Signature	TD Kirschbaum
Date	12-15-16
Organization	HMG Engineers, Inc
Certified By	JEAA
Date	12-12-16

VEOF1.1

Plant Feed Belt B.C.3

EPA
VISIBLE EMISSION OBSERVATION FORM 1

Form Number			6	0	1	Page 1	Of
Continued on VEO Form Number							

Method Used (Circle One): Method 9 (circled) 203A 203B Other: _____

Company Name	Eagle River Coal
Facility Name	PLANT – Mine #1
Street Address	3880 Hwy 145
City	Harrisburg
State	IL
Zip	62946

Process	Unit #	Operating Mode
Transfer Pt. Belt BC-3	BC-3	Running - Full
Control Equipment		Operating Mode

Describe Emission Point: Crusher Belt to chute Feeding New Plant Belt – OLD Plant Feed QP-2 to OLD Plant

Height of Emiss. Pt. Start 7 End	Height of Emiss. Pt. Rel. to Observer Start 1 End
Distance to Emiss. Pt. Start 40 End	Direction to Emiss. Pt. (Degrees) Start 90 End
Vertical Angle to Obs. Pt. Start End	Direction to Obs. Pt. (Degrees) Start 90 End
Distance and Direction to Observation Point from Emission Point Start 0 Zenith –	End 5-W

Describe Emissions Start Dust – Coal	End
Emission Color Start BLACK End	Water Droplet Plume Attached ☐ Detached ☐ None ☒

Describe Plume Background Start Ground + Sky	End
Background Color Start Green + gray End	Sky Conditions Start Overcast End
Wind Speed Start 2 End	Wind Direction Start W End W
Ambient Temp. Start 18°F End	Wet Bulb Temp. / RH Percent

Source Layout Sketch

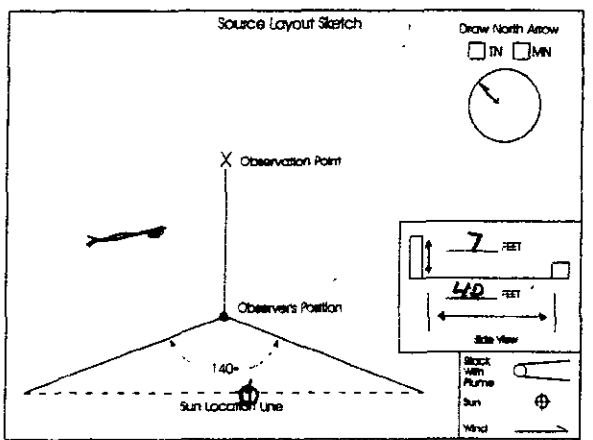

Longitude	Latitude	Declination

Additional Information

Observation Date	Time Zone	Start Time	End Time
12-15-16	Central	2:02 pm	2:32 pm

Min \ Sec	0	15	30	45	Comments
1	0	0	0	0	
2	0	0	0	0	
3	0	0	0	0	
4	0	0	0	0	
5	0	0	0	0	
6	0	10	0	5	
7	5	0	5	0	
8	0	0	5	0	
9	0	10	5	0	
10	5	0	0	10	
11	5	0	0	0	
12	0	0	0	0	
13	0	5	5	0	
14	0	0	0	0	
15	0	0	0	0	
16	0	0	0	0	
17	0	0	0	0	
18	10	10	10	5	
19	5	5	5	10	
20	5	0	0	0	
21	0	0	0	5	
22	5	5	5	5	
23	0	5	5	0	
24	5	0	0	0	
25	0	0	0	0	
26	0	5	5	0	
27	0	0	0	0	
28	0	5	0	0	
29	0	0	5	0	
30	5	0	0	0	

Observer's Name (Print)	Timothy Kirschbaum
Observer's Signature	[signature]
Date	12-15-16
Organization	HMG Engineers Inc
Certified By	IEPA
Date	10-12-16

VEOF1.1

EPA
VISIBLE EMISSION OBSERVATION FORM 1

Form Number						Page		Of	
			2	0	L	1		1	
Continued on VEO Form Number									

Method Used (Circle One): Method 9 (circled) 203A 203B Other: _____

Company Name	Eagle River Coal
Facility Name	PLANT - Mac #7
Street Address	3880 Hwy 145
City	Harrisburg
State	IL
Zip	62946

Process	Unit #	Operating Mode
Transfer Point	BC-4	Running
Control Equipment		Operating Mode: Full

Describe Emission Point: Product Coal BC10 to Radial Stacker + Belt BC 10 to BC4 Thru SS-2

Height of Emiss. Pt. Start 4' End	Height of Emiss. Pt. Rel. to Observer Start 4' End
Distance to Emiss. Pt. Start 50' End	Direction to Emiss. Pt. (Degrees) Start 335 End

Vertical Angle to Obs. Pt. Start End	Direction to Obs. Pt. (Degrees) Start 335 End
Distance and Direction to Observation Point from Emission Point Start 3-W	End 3-W

Describe Emissions Start	End
Emission Color Start End	Water Droplet Plume Attached ☐ Detached ☐ None ☒

Describe Plume Background Start Highway	End
Background Color Start Brown End	Sky Conditions Start Cloudy End
Wind Speed Start 0 End 2	Wind Direction Start 2 End W
Ambient Temp. Start 18°F End 18°F	Wet Bulb Temp. / RH Percent

Source Layout Sketch

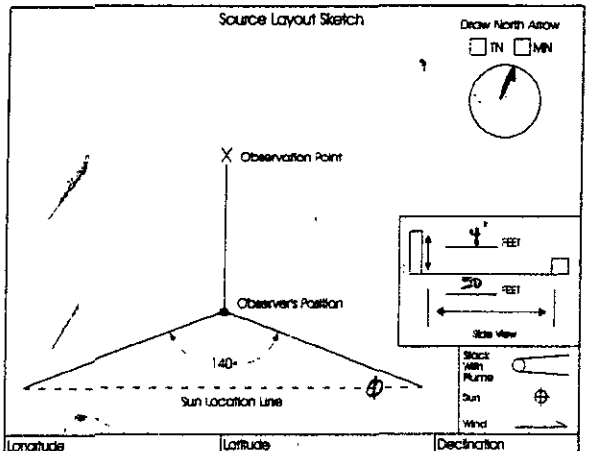

Longitude	Latitude	Declination

Additional Information

Observation Date	Time Zone	Start Time	End Time
12-15-16	Central	8:30	9:00 Am

Min \ Sec	0	15	30	45	Comments
1	0	0	0	0	
2	0	0	0	0	
3	0	0	0	0	
4	0	0	0	0	
5	0	0	0	0	
6	0	0	0	0	
7	0	0	0	0	
8	0	0	0	0	
9	0	0	0	0	
10	0	0	0	0	
11	0	0	0	0	
12	0	0	0	0	
13	0	0	0	0	
14	0	0	0	0	
15	0	0	0	0	
16	0	0	0	0	
17	0	0	0	0	
18	0	0	0	0	
19	0	0	0	0	
20	0	0	0	0	
21	0	0	0	0	
22	0	0	0	0	
23	0	0	0	0	
24	0	0	0	0	
25	0	0	0	0	
26	0	0	0	0	
27	0	0	0	0	
28	0	0	0	0	
29	0	0	0	0	
30	0	0	0	0	

Observer's Name (Print)	Timothy Kirschbaum
Observer's Signature	[signature]
Date	12-15-16
Organization	HMG Engineers
Certified By	IEPA
Date	10-12-15

VEOF1.1

New Plant Feed — Top Screen — Tail Radial Stacker

BC-10 Thru SS-2 to BC-4

Product Coal Pile

EPA
VISIBLE EMISSION OBSERVATION FORM 1

Form Number						Page	Of
			1	0	1	1	
Continued on VEO Form Number							

Method Used (Circle One): Method 2 (circled) 203A 203B Other: _____

Company Name	Eagle River Coal
Facility Name	Plant
Street Address	3880 Hwy 145
City	Harrisburg
State	IL
Zip	62946

Process	Unit #	Operating Mode
Clean Coal Pile		Running
Control Equipment		Operating Mode

Describe Emission Point: Clean Coal Pile

End of Belt to Ground ≈ 20' Drop

Height of Emiss. Pt. Start 20 End	Height of Emiss. Pt. Rel. to Observer Start End
Distance to Emiss. Pt. Start 100 End	Direction to Emiss. Pt. (Degrees) Start End
Vertical Angle to Obs. Pt. Start End	Direction to Obs. Pt. (Degrees) Start ⊗ End
Distance and Direction to Observation Point from Emission Point Start 0 End	

Describe Emissions Start None End	
Emission Color Start End	Water Droplet Plume Attached ☐ Detached ☐ None ☒

Describe Plume Background Start Sky - Blue End Sky	
Background Color Start Lt Blue End Lt Blue	Sky Conditions Start Clear End
Wind Speed Start 0 End	Wind Direction Start End
Ambient Temp. Start 18°F End	Wet Bulb Temp. / RH Percent

Source Layout Sketch

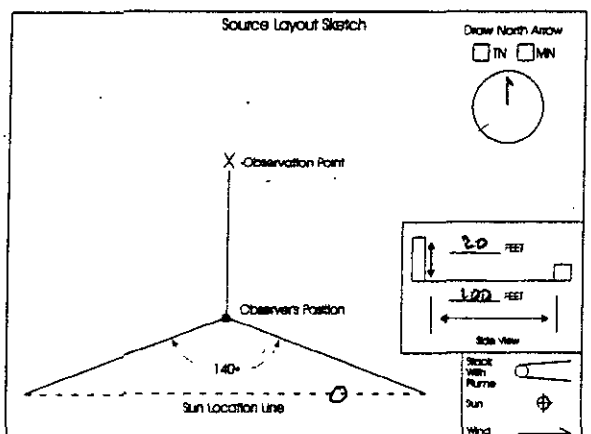

Longitude	Latitude	Declination

Additional Information

Observation Date	Time Zone	Start Time	End Time
12-15-16	Central	7:53 am	8:24 am

Min \ Sec	0	15	30	45	Comments
1	0	0	0	0	
2	0	0	0	0	
3	0	0	0	0	
4	0	0	0	0	
5	0	0	0	0	
6	0	0	0		
7	0	0	0	0	
8	0	0	0	0	
9	0	0	0	0	
10	0	0	0	0	
11	0	0	0	0	
12	0	0	0	0	
13	0	0	0	0	
14	0	0	0	0	
15	0	0	0	0	
16	0	0	0	0	
17	0	0	0	0	
18	0	0	0	0	
19	0	0	0	0	
20	0	0	0	0	
21	0	0	0	0	
22	0	0	0	0	
23	0	0	0	0	
24	0	0	0	0	
25	0	0	0	0	
26	0	0	0	0	
27	0	0	0	0	
28	0	0	0	0	
29	0	0	0	0	
30	0	0	0	0	

Observer's Name (Print)	Timothy Kirschbaum
Observer's Signature	[signature]
Date	12-15-16
Organization	HMG Engineers Inc
Certified By	IEPA
Date	10-12-16

VEOF1.1

BS-1 + C C 01 Rd. (Stacker

COAL
HOPPER TO BF-1

EPA
VISIBLE EMISSION OBSERVATION FORM 1

Form Number		Page 1	Of 1
Continued on VEO Form Number			

Method Used (Circle One): Method 1 (circled) 203A 203B Other: _____

Company Name	Eagle River Coal
Facility Name	Preparation Plant Mine #1
Street Address	3880 Hwy 145
City	Harrisburg
State	IL
Zip	62946

Process: Belt Coal To TP-1	Unit #: BF-1	Operating Mode: Running
Control Equipment: Moisture Content of Coal		Operating Mode: Running - HALF

Describe Emission Point: Hopper Feed to Belt - Direct.

Height of Emiss. Pt. Start 4-6 End 4-6	Height of Emiss. Pt. Rel. to Observer Start 0 End
Distance to Emiss. Pt. Start 60 End 60	Direction to Emiss. Pt. (Degrees) Start 90 End
Vertical Angle to Obs. Pt. Start 0 End	Direction to Obs. Pt. (Degrees) Start 90 End
Distance and Direction to Observation Point from Emission Point Start EAST End	

Describe Emissions: Start Fugitive Coal Dust + End

Emission Color Start None End	Water Droplet Plume Attached ☐ Detached ☐ None ☒

Describe Plume Background Start Hillside Brown + Canopy of Belt + Sky End	
Background Color Start Brown End Gray Conveyor Canopy	Sky Conditions Start Overcast End Overcast
Wind Speed Start 0 End 0	Wind Direction Start — End —
Ambient Temp. Start ~40° End	Wet Bulb Temp. / RH Percent

Source Layout Sketch

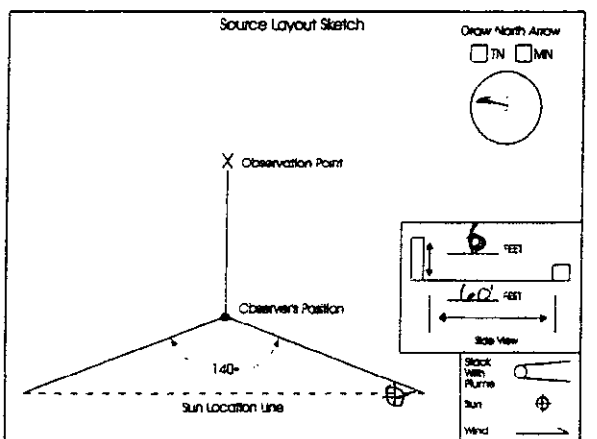

Longitude	Latitude	Declination

Additional Information: + Half Tonnage -
OBSERVATION included Hopper w/ LOADER MAINTAINING Hopper.

Observation Date	Time Zone	Start Time	End Time
12-28-16	Central	12:30 AM	12:59 pm

Min \ Sec	0	15	30	45	Comments
1	0	0	0	0	
2	0	0	0	0	
3	0	0	0	0	
4	0	0	0	0	
5	0	0	0	0	
6	0	0	0	0	
7	0	0	0	0	
8	0	0	0	0	
9	0	0	0	0	
10	0	0	0	0	
11	0	0	0	0	
12	0	0	0	0	
13	0	0	0	0	
14	0	0	0	0	
15	0	0	0	0	
16	0	0	0	0	
17	0	0	0	0	
18	0	0	0	0	
19	0	0	0	0	
20	0	0	0	0	
21	0	0	0	0	
22	0	0	0	0	
23	0	0	0	0	
24	0	0	0	0	
25	0	0	0	0	
26	0	0	0	0	
27	0	0	0	0	
28	0	0	0	0	
29	0	0	0	0	
30	0	0	0	0	

Observer's Name (Print)	Timothy Kirschbaum
Observer's Signature	[signature]
Date	12-28-16
Organization	AMG Engineers
Certified By	EPA
Date	10-12-16

VEOF1.1

Read Hopper + Belt to BF-1

RAW COAL Pile

EPA
VISIBLE EMISSION OBSERVATION FORM 1

Form Number		Page 1 Of 1
Continued on VEO Form Number		

Method Used (Circle One): Method 9 (circled) 203A 203B Other: _____

Company Name	Eagle River Coal
Facility Name	Preparation Plant
Street Address	
City	Harrisburg
State	IL
Zip	

Process: Stockpile	Unit #:	Operating Mode:
Control Equipment: Coal Moisture		Operating Mode:

Describe Emission Point: RAW COAL Piles - Single Truck Dumped

Height of Emiss. Pt. Start End	Height of Emiss. Pt. Rel. to Observer Start End
Distance to Emiss. Pt. Start End	Direction to Emiss. Pt. (Degrees) Start End

Vertical Angle to Obs. Pt. Start End	Direction to Obs. Pt. (Degrees) Start End
Distance and Direction to Observation Point from Emission Point Start	End

Describe Emissions Start: Coal Dust	End
Emission Color Start: Black End	Water Droplet Plume Attached ☐ Detached ☐ None ☒

Describe Plume Background Start: Trees + Sky	End
Background Color Start: Gray End	Sky Conditions Start: Overcast End
Wind Speed Start: 0 End	Wind Direction Start End
Ambient Temp. Start: ~40° End	Wet Bulb Temp. / RH Percent

Source Layout Sketch

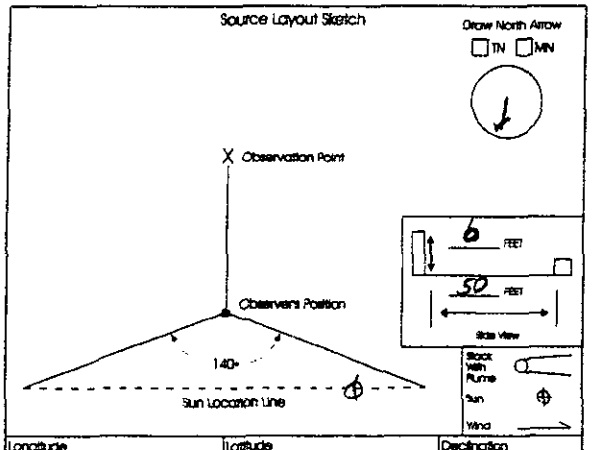

Longitude	Latitude	Declination

Additional Information: RAW COAL - Small End Dumped Piles - Loader Mining to Hopper Bin

Observation Date	Time Zone	Start Time	End Time
12-28-16	Central	1:04 pm	1:35 pm

Min \ Sec	0	15	30	45	Comments
1	0	0	0	0	
2	0	0	0	0	
3	0	0	0	0	
4	0	0	0	—	Truck observation
5	0	0	0	0	
6	0	—	0	0	Truck observation
7	0	0	0	0	
8	0	0	0	0	
9	0	0	0	0	
10	0	0	0	0	
11	0	0	0	0	
12	—	0	0	0	Truck observation
13	0	0	0	0	
14	0	0	0	0	
15	0	0	0	0	
16	0	0	0	0	
17	0	0	0	0	
18	0	0	0	0	
19	0	0	0	0	
20	0	0	—	0	Truck obs
21	0	0	0	0	
22	0	0	0	0	
23	0	0	0	0	
24	0	0	0	0	
25	0	0	0	0	
26	0	0	0	0	
27	0	0	0	0	
28	0	—	0	0	Truck obs
29	0	0	0	0	
30	0	0	0	0	

Observer's Name (Print): Timothy Kirschbaum	
Observer's Signature: [signature]	Date: 12-28-16
Organization: HMG Engineers	
Certified By: IEPA	Date: 10-12-16

VEOF1.1

EPA
VISIBLE EMISSION OBSERVATION FORM 1

Form Number						Page	Of
Continued on VEO Form Number							

Method Used (Circle One): Method 9 (circled) 203A 203B Other: _____

Company Name	
Facility Name	Popplant
Street Address	
City	State / Zip

Process: Truck Dump	Unit #	Operating Mode
Control Equipment		Operating Mode

Describe Emission Point: Trucks End Dumping to ground
Loader - Moving Coal to Hopper

Height of Emiss. Pt. Start ~6 End	Height of Emiss. Pt. Rel. to Observer Start End
Distance to Emiss. Pt. Start 50' End	Direction to Emiss. Pt. (Degrees) Start End

Vertical Angle to Obs. Pt. Start End	Direction to Obs. Pt. (Degrees) Start End
Distance and Direction to Observation Point from Emission Point Start	End

Describe Emissions Start	End
Emission Color Start End	Water Droplet Plume Attached ☐ Detached ☐ None ☐

Describe Plume Background Start	End
Background Color Start Gray End	Sky Conditions Start Overcast End
Wind Speed Start 0 End 0	Wind Direction Start End
Ambient Temp. Start ~40 End	Wet Bulb Temp. / RH Percent

Source Layout Sketch

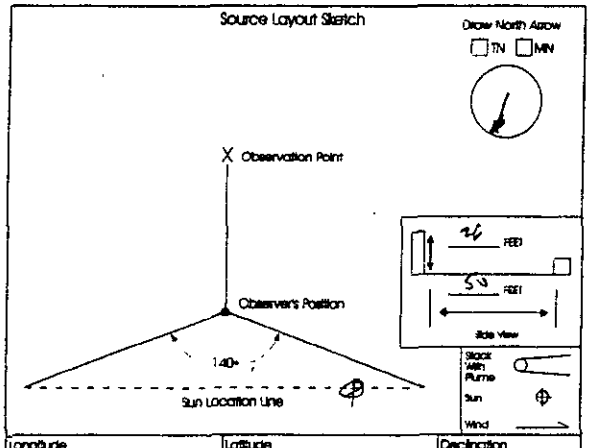

Longitude	Latitude	Declination

Additional Information

Observation Date	Time Zone	Start Time	End Time
12-28-16	Center		

Min \ Sec	0	5	10	20	Comments
1	0	0	10	5	Truck 1
2	0	5	0	0	Truck 2
3	0	0	0	0	Truck 3
4	0	0	10	0	Truck 4
5	0	0	0	0	Truck 5
6					
7					
8					
9					
10					
11					
12					
13					
14					
15					
16					
17					
18					
19					
20					
21					
22					
23					
24					
25					
26					
27					
28					
29					
30					

Observer's Name (Print): Timothy Virschbaum	
Observer's Signature: [signature]	Date: 12-28-16
Organization: HMG Engineers	
Certified By: IEPA	Date: 10-12-15

VEOF1.1 Read with Rawhide Stockpile

EPA
VISIBLE EMISSION OBSERVATION FORM 1

Method Used (Circle One): Method 9 | 203A | 203B | Other: _____

Form Number	Page	Of

Continued on VEO Form Number: _____

Company Name		
Eagle River LLC		
Facility Name		
Eagle River Mine No 1		
Street Address		
City	State	Zip
Harrisburg	IL	

Process	Unit #	Operating Mode
		running
Control Equipment		Operating Mode

Describe Emission Point: Loader Dump to ~~stack~~ hopper

Height of Emiss. Pt. Start 20 End	Height of Emiss. Pt. Rel. to Observer Start 20 End 20
Distance to Emiss. Pt. Start 75' End 75'	Direction to Emiss. Pt. (Degrees) Start W End W

Vertical Angle to Obs. Pt. Start End	Direction to Obs. Pt. (Degrees) Start End
Distance and Direction to Observation Point from Emission Point Start 75' W.	End 75' W

Describe Emissions Start	End
Emission Color Start End	Water Droplet Plume Attached ☐ Detached ☐ None ☒

Describe Plume Background Start	End
Background Color Start End	Sky Conditions Start Cloudy End Clouds
Wind Speed Start 5-10 End 5-10	Wind Direction Start S End S
Ambient Temp. Start 45 End 45	Wet Bulb Temp. / RH Percent

Source Layout Sketch

Draw North Arrow ☐ TN ☐ MN

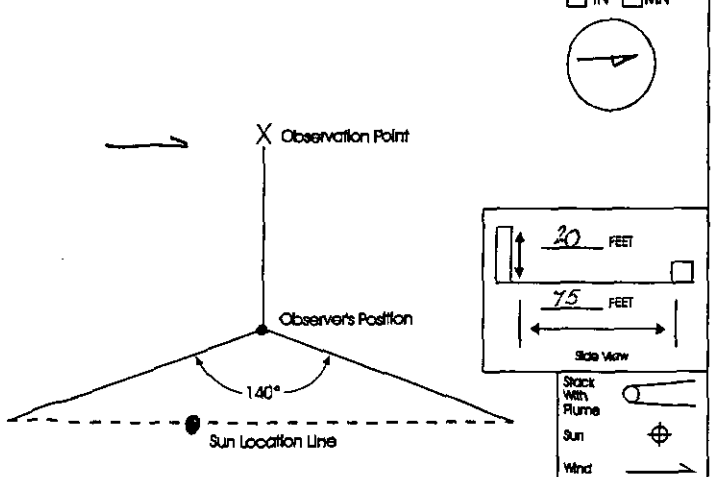

Longitude	Latitude	Declination

Additional Information: gps pt 1210

Observation Date	Time Zone	Start Time	End Time
Jan 31, 2017		8:32	8:40

Min \ Sec	0	15	30	45	Comments
1	0	0			
2	0	0	0	0	
3	0	0	0	0	
4					
5					
6					
7					
8					
9					
10					
11					
12					
13					
14					
15					
16					
17					
18					
19					
20					
21					
22					
23					
24					
25					
26					
27					
28					
29					
30					

Observer's Name (Print) Derick Jones	
Observer's Signature [signature]	Date Jan 31, 2015
Organization HMC Engineers	
Certified By	Date

VEOF 1.1

EPA

VISIBLE EMISSION OBSERVATION FORM 1

Form Number		Page	Of
Continued on VEO Form Number			

Method Used (Circle One): Method 9 | 203A | 203B | Other: _____

Company Name		
Facility Name		
Street Address		
City	State	Zip

Process	Unit #	Operating Mode
Control Equipment		Operating Mode

Describe Emission Point: Raw Coal Hopper

Height of Emiss. Pt. Start 10 End 10	Height of Emiss. Pt. Rel. to Observer Start 10 End 10
Distance to Emiss. Pt. Start 50 End 50	Direction to Emiss. Pt. (Degrees) Start W End W
Vertical Angle to Obs. Pt. Start End	Direction to Obs. Pt. (Degrees) Start End
Distance and Direction to Observation Point from Emission Point Start End	

Describe Emissions: Start End

Emission Color Start End	Water Droplet Plume Attached ☐ Detached ☐ None ☐

Describe Plume Background: Start End

Background Color Start End	Sky Conditions Start End	
Wind Speed Start End	Wind Direction Start End	
Ambient Temp. Start End	Wet Bulb Temp.	RH Percent

Source Layout Sketch

Draw North Arrow ☐ TN ☐ MN

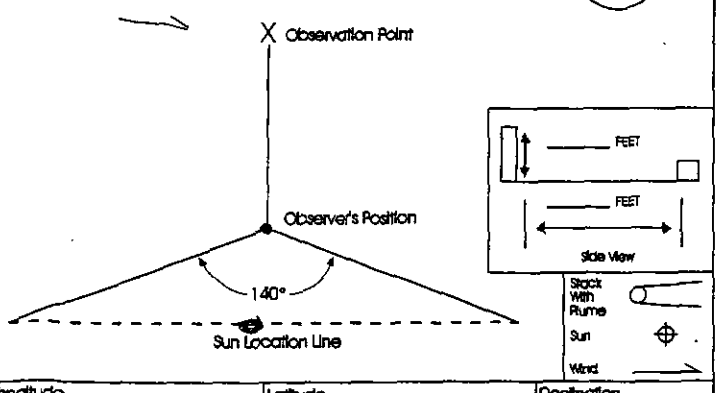

Longitude	Latitude	Declination

Additional Information: gps pt 126

Observation Date	Time Zone	Start Time	End Time
Jan 31, 2017		8:43	9:03

Min \ Sec	0	15	30	45	Comments
1	0	0	0	0	
2	0	0	0	0	
3	0	0	0	0	
4	0	0	0	0	
5	0	0	0	0	
6	0	0	0	0	
7	0	0	0	0	
8	0	0	0	0	
9	0	0	0	0	
10	0	0	0	0	
11	0	0	0	0	
12	0	0	0	0	
13	0	0	0	0	
14	0	0	0	0	
15	0	0	0	0	
16	0	0	0	0	
17	0	0	0	0	
18	0	0	0	0	
19	0	0	0	0	
20	0	0	0	0	
21					
22					
23					
24					
25					
26					
27					
28					
29					
30					

Observer's Name (Print) Bernie Jones	
Observer's Signature Bernie Jones	Date Jan 31, 2017
Organization	
Certified By	Date

VEOF 1.1

EPA
VISIBLE EMISSION OBSERVATION FORM 1

Form Number						Page	Of
Continued on VEO Form Number							

Method Used (Circle One): Method 9 | 203A | 203B | Other: _____

Company Name		
Facility Name		
Street Address		
City	State	Zip

Process	Unit #	Operating Mode: Running
Control Equipment: Water Spray		Operating Mode

Describe Emission Point: Coal crusher Coal Breaker

Height of Emiss. Pt. Start 50 45 End 50 45	Height of Emiss. Pt. Rel. to Observer Start End
Distance to Emiss. Pt. Start 100 End 100	Direction to Emiss. Pt. (Degrees) Start W End W
Vertical Angle to Obs. Pt. Start End	Direction to Obs. Pt. (Degrees) Start End
Distance and Direction to Observation Point from Emission Point Start	End

Describe Emissions Start	End
Emission Color Start End	Water Droplet Plume Attached ☐ Detached ☐ None ☐

Describe Plume Background Start	End	
Background Color Start Gray End	Sky Conditions Start Cloudy End	
Wind Speed Start 5-10 End 5-10	Wind Direction Start S End	
Ambient Temp. Start 45 End 45	Wet Bulb Temp.	RH Percent

Source Layout Sketch

Draw North Arrow ☐ TN ☐ MN

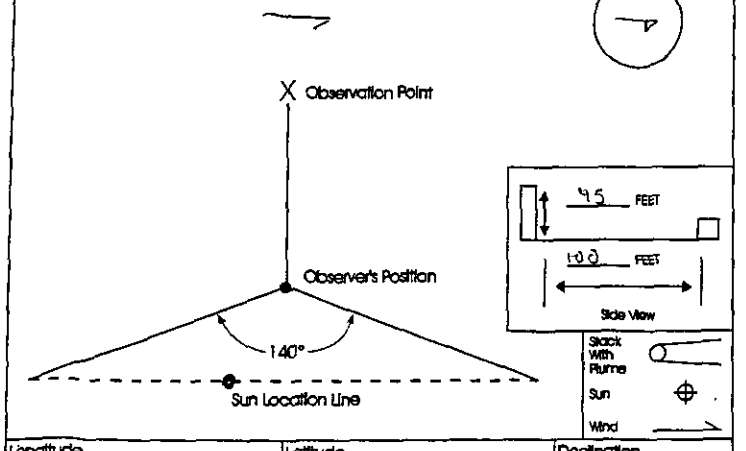

Longitude	Latitude	Declination

Additional Information: gps pt 127

Observation Date	Time Zone	Start Time	End Time
Jan 31, 2007		9:07	9:37

Min \ Sec	0	15	30	45	Comments
1	0	0	0	0	
2	0	0	0	0	
3	0	0	0	0	
4	0	0	0	0	
5	0	5	0	0	
6	0	0	0	0	
7	0	0	5	0	
8	0	0	0	0	
9	0	0	0	0	
10	5	0	5	0	
11	0	0	0	0	
12	0	0	0	0	
13	0	0	0	0	
14	0	0	0	0	
15	0	0	0	0	
16	0	0	5	0	
17	0	0	0	0	
18	0	0	0	0	
19	0	0	5	0	
20	0	0	0	0	
21	0	0	0	0	
22	0	5	0	0	
23	0	0	0	0	
24	0	0	0	0	
25	0	5	0	0	
26	0	0	0	0	
27	0	0	0	0	
28	0	0	5	5	
29	0	0	0	0	
30	0	0	0	0	

Observer's Name (Print): Derrick Jones	
Observer's Signature: Derrick Jones	Date: Jan 31, 2007
Organization: HMG Engineers Inc	
Certified By	Date

VEOF 1.1

B.C. 11

EPA
VISIBLE EMISSION OBSERVATION FORM 1

Form Number	Page 1 Of 6
Continued on VEO Form Number	

Method Used (Circle One): Method 9 | 203A | 203B | Other: _____

Company Name		
Eagle River Coal LLC		
Facility Name		
Eagle River Mine No. 1		
Street Address		
City: Harrisburg	State: IL	Zip

Process	Unit #	Operating Mode
Control Equipment		Operating Mode

Describe Emission Point: Belt from crusher to plant

Height of Emiss. Pt.	Height of Emiss. Pt. Rel. to Observer
Start 25 End 25	Start 25 End 25
Distance to Emiss. Pt.	Direction to Emiss. Pt. (Degrees)
Start 100 End 100	Start End

Vertical Angle to Obs. Pt.	Direction to Obs. Pt. (Degrees)
Start End	Start End

Distance and Direction to Observation Point from Emission Point: Start End

Describe Emissions: Start End

Emission Color	Water Droplet Plume
Start End	Attached ☐ Detached ☐ None ☐

Describe Plume Background: Start End

Background Color	Sky Conditions
Start End	Start End
Wind Speed	Wind Direction
Start End	Start End
Ambient Temp.	Wet Bulb Temp. / RH Percent
Start End	

Source Layout Sketch

Draw North Arrow ☐ TN ☐ MN

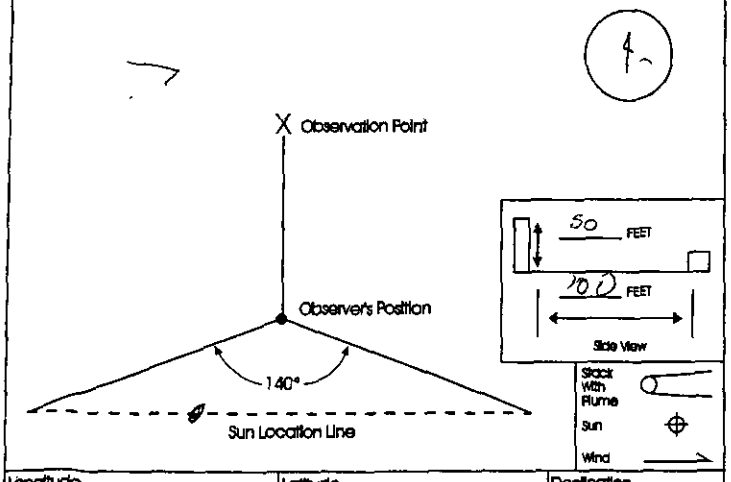

Longitude	Latitude	Declination

Additional Information:

Observation Date	Time Zone	Start Time	End Time
Jan 31, 2016		9:59	

Min \ Sec	0	15	30	45	Comments
1	0	0	0	0	
2	0	0	0	0	
3	0	0	0	0	
4	0	0	0	0	
5	0	0	0	0	
6	0	0	0	0	
7	0	0	0	0	
8	0	0	0	0	
9	0	0	0	0	
10	0	0	0	0	
11	0	0	0	0	
12	0	0	0	0	
13	0	0	0	0	
14	0	0	0	0	
15	0	0	0	0	
16	0	0	0	0	
17	0	0	0	0	
18	0	0	0	0	
19	0	0	0	0	
20	0	0	0	0	
21	0	0	0	0	
22	0	0	0	0	
23	0	0	0	0	
24	0	0	0	0	
25	0	0	0	0	
26	0	0	0	0	
27	0	0	0	0	
28	0	0	0	0	
29	0	0	0	0	
30	0	0	0	0	

Observer's Name (Print)	
Derick Jones	
Observer's Signature	Date
[signature]	12/31/17
Organization	
Certified By	Date

VEOF 1.1

EPA
VISIBLE EMISSION OBSERVATION FORM 1

Form Number						Page 2 Of 6
Continued on VEO Form Number						

Method Used (Circle One)
Method 9 203A 203B Other: _____

Company Name		
Facility Name		
Street Address		
City	State	Zip

Process	Unit #	Operating Mode
Control Equipment		Operating Mode

Describe Emission Point
Belt conveyor to plant

Height of Emiss. Pt. Start End	Height of Emiss. Pt. Rel. to Observer Start End
Distance to Emiss. Pt. Start End	Direction to Emiss. Pt. (Degrees) Start End
Vertical Angle to Obs. Pt. Start End	Direction to Obs. Pt. (Degrees) Start End
Distance and Direction to Observation Point from Emission Point Start End	

Describe Emissions Start End	
Emission Color Start End	Water Droplet Plume Attached ☐ Detached ☐ None ☐

Describe Plume Background Start End		
Background Color Start End	Sky Conditions Start End	
Wind Speed Start End	Wind Direction Start End	
Ambient Temp. Start End	Wet Bulb Temp.	RH Percent

Source Layout Sketch

Draw North Arrow ☐ TN ☐ MN

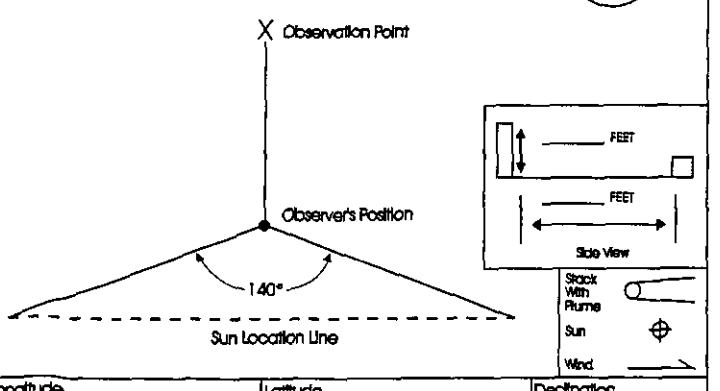

Longitude	Latitude	Declination

Additional Information

Observation Date	Time Zone	Start Time	End Time

Min \ Sec	0	15	30	45	Comments
1	0	0	0	0	
2	0	0	0	0	
3	0	0	0	0	
4	0	0	0	0	
5	0	0	0	0	
6	0	0	0	0	
7	0	0	0	0	
8	0	0	0	0	
9	0	0	0	0	
10	0	0	0	0	
11	0	0	0	0	
12	0	0	0	0	
13	0	0	0	0	
14	0	0	0	0	
15	0	0	0	0	
16	0	0	0	0	
17	0	0	0	0	
18	0	0	0	0	
19	0	0	0	0	
20	0	0	0	0	
21	0	0	0	0	
22	0	0	0	0	
23	0	0	0	0	
24	0	0	0	0	
25	0	0	0	0	
26	0	0	0	0	
27	0	0	0	0	
28	0	0	0	0	
29	0	0	0	0	
30	0	0	0	0	

Observer's Name (Print)	
Observer's Signature	Date
Organization	
Certified By	Date

EPA
VISIBLE EMISSION OBSERVATION FORM 1

Form Number	Page 3	Of 6
Continued on VEO Form Number		

Method Used (Circle One)
Method 9 203A 203B Other: _____

Company Name		
Facility Name		
Street Address		
City	State	Zip

Process	Unit #	Operating Mode
Control Equipment		Operating Mode

Describe Emission Point
Belt crusher to Dexit

Height of Emiss. Pt.	Height of Emiss. Pt. Rel. to Observer
Start End	Start End
Distance to Emiss. Pt.	Direction to Emiss. Pt. (Degrees)
Start End	Start End

Vertical Angle to Obs. Pt.	Direction to Obs. Pt. (Degrees)
Start End	Start End
Distance and Direction to Observation Point from Emission Point	
Start	End

Describe Emissions
Start End

Emission Color	Water Droplet Plume
Start End	Attached ☐ Detached ☐ None ☐

Describe Plume Background
Start End

Background Color	Sky Conditions
Start End	Start End
Wind Speed	Wind Direction
Start End	Start End

Ambient Temp.	Wet Bulb Temp.	RH Percent
Start End		

Source Layout Sketch

Draw North Arrow
☐ TN ☐ MN

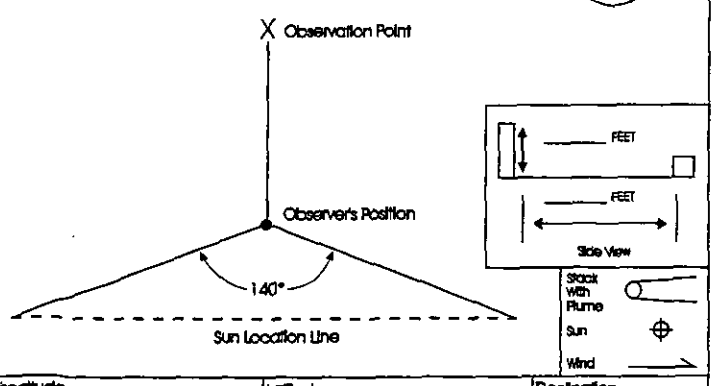

Longitude	Latitude	Declination

Additional Information

Observation Date	Time Zone	Start Time	End Time

Min \ Sec	0	15	30	45	Comments
1	0	0	0	0	
2	0	0	0	0	
3	0	0	0	0	
4	0	0	0	0	
5	0	0	0	0	
6	0	0	0	0	
7	0	0	0	0	
8	0	0	0	0	
9	0	0	0	0	
10	0	0	0	0	
11	0	0	0	0	
12	0	0	0	0	
13	0	0	0	0	
14	0	0	0	0	
15	0	0	0	0	
16	0	0	0	0	
17	0	0	0	0	
18	0	0	0	0	
19	0	0	0	0	
20	0	0	0	0	
21	0	0	0	0	
22	0	0	0	0	
23	0	0	0	0	
24	0	0	0	0	
25	0	0	0	0	
26	0	0	0	0	
27	0	0	0	0	
28	0	0	0	0	
29	0	0	0	0	
30	0	0	0	0	

Observer's Name (Print)	
Observer's Signature	Date
Organization	
Certified By	Date

VEOF 1.1

EPA
VISIBLE EMISSION OBSERVATION FORM 1

Form Number						Page 5	Of 6
Continued on VEO Form Number							

Method Used (Circle One)
Method 9 203A 203B Other: _____

Company Name		
Facility Name		
Street Address		
City	State	Zip

Process	Unit #	Operating Mode
Control Equipment		Operating Mode

Describe Emission Point
Pelt crusher to plant

Height of Emiss. Pt. Start End	Height of Emiss. Pt. Rel. to Observer Start End
Distance to Emiss. Pt. Start End	Direction to Emiss. Pt. (Degrees) Start End

Vertical Angle to Obs. Pt. Start End	Direction to Obs. Pt. (Degrees) Start End
Distance and Direction to Observation Point from Emission Point Start End	

Describe Emissions
Start End
Emission Color Start End
Water Droplet Plume Attached ☐ Detached ☐ None ☐

Describe Plume Background
Start End

Background Color Start End	Sky Conditions Start End
Wind Speed Start End	Wind Direction Start End
Ambient Temp. Start End	Wet Bulb Temp. / RH Percent

Source Layout Sketch

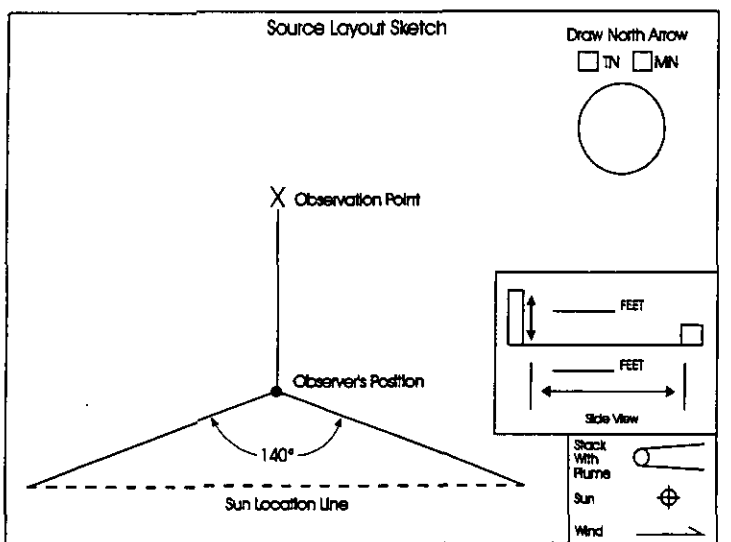

Longitude	Latitude	Declination

Additional Information

Observation Date	Time Zone	Start Time	End Time

Min \ Sec	0	15	30	45	Comments
1	0	0	0	0	
2	0	0	0	0	
3	0	0	0	0	
4	0	0	0	0	
5	0	0	0	0	
6	0	0	0	0	
7	0	0	0	0	
8	0	0	0	0	
9	0	0	0	0	
10	0	0	0	0	
11	0	0	0	0	
12	0	0	0	0	
13	0	0	0	0	
14	0	0	0	0	
15	0	0	0	0	
16	0	0	0	0	
17	0	0	0	0	
18	0	0	0	0	
19	0	0	0	0	
20	0	0	0	0	
21	0	0	0	0	plant shutdown 1:00 pm
22	0	0	0	0	plant starting 1:01 pm
23	0	0	0	0	
24	0	0	0	0	
25	0	0	0	0	
26	0	0	0	0	
27	0	0	0	0	
28	0	0	0	0	
29	0	0	0	0	
30	0	0	0	0	

Observer's Name (Print)	
Observer's Signature	Date
Organization	
Certified By	Date

VEOF1.1

EPA
VISIBLE EMISSION OBSERVATION FORM 1

Form Number						Page 4	Of 6
Continued on VEO Form Number							

Method Used (Circle One)
Method 9 203A 203B Other: _____

Company Name		
Facility Name		
Street Address		
City	State	Zip

Process	Unit #	Operating Mode
Control Equipment		Operating Mode

Describe Emission Point	
Belt conveyor to plant	
Height of Emiss. Pt. Start End	Height of Emiss. Pt. Rel. to Observer Start End
Distance to Emiss. Pt. Start End	Direction to Emiss. Pt. (Degrees) Start End

Vertical Angle to Obs. Pt. Start End	Direction to Obs. Pt. (Degrees) Start End
Distance and Direction to Observation Point from Emission Point Start End	

Describe Emissions Start	End
Emission Color Start End	Water Droplet Plume Attached ☐ Detached ☐ None ☐

Describe Plume Background Start	End
Background Color Start End	Sky Conditions Start End
Wind Speed Start End	Wind Direction Start End
Ambient Temp. Start End	Wet Bulb Temp. / RH Percent

Source Layout Sketch

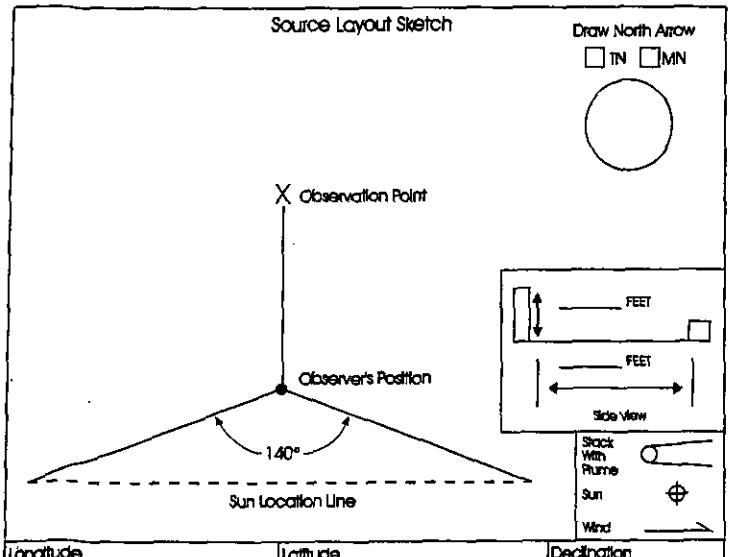

Longitude	Latitude	Declination

Observation Date	Time Zone	Start Time	End Time

Min \ Sec	0	15	30	45	Comments
1					
2					
3					
4					
5					
6					
7					
8					
9					
10					
11					
12					
13					
14					
15					
16					
17					
18					
19					
20					
21					
22					
23					
24					plant shutdown 14:07
25					plant startup 17:23
26					
27					
28					
29					
30					

Observer's Name (Print)	
Observer's Signature	Date
Organization	
Certified By	Date

Additional Information

VEOF 1.1

EPA

VISIBLE EMISSION OBSERVATION FORM 1

Form Number						Page 6	Of 6
Continued on VEO Form Number							

Method Used (Circle One)
Method 9 203A 203B Other: _____

Company Name		
Facility Name		
Street Address		
City	State	Zip

Process	Unit #	Operating Mode
Control Equipment		Operating Mode

Describe Emission Point	
Height of Emiss. Pt. Start End	Height of Emiss. Pt. Rel. to Observer Start End
Distance to Emiss. Pt. Start End	Direction to Emiss. Pt. (Degrees) Start End

Vertical Angle to Obs. Pt. Start End	Direction to Obs. Pt. (Degrees) Start End
Distance and Direction to Observation Point from Emission Point Start End	

Describe Emissions Start End	
Emission Color Start End	Water Droplet Plume Attached ☐ Detached ☐ None ☐

Describe Plume Background Start End		
Background Color Start End	Sky Conditions Start End	
Wind Speed Start End	Wind Direction Start End	
Ambient Temp. Start End	Wet Bulb Temp.	RH Percent

Source Layout Sketch

Draw North Arrow ☐ TN ☐ MN

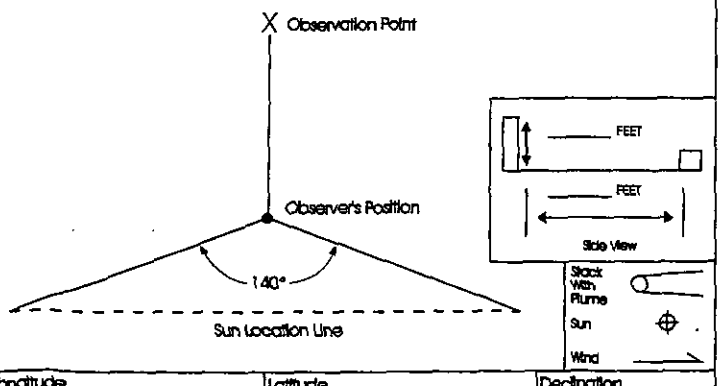

Longitude	Latitude	Declination

Additional Information

gps 129

Observation Date	Time Zone	Start Time	End Time
Jan 31, 2017			1:48

Min \ Sec	0	15	30	45	Comments
1	0	0	0	0	
2	0	0	0	0	
3	0	0	0	0	
4	0	0	0	0	
5	0	0	0	0	
6	0	0	0	0	
7	0	0	0	0	
8	0	0	0	0	
9	0	0	0	0	
10	0	0	0	0	
11	0	0	0	0	
12	0	0	0	0	
13	0	0	0	0	
14	0	0	0	0	
15	0	0	0	0	
16	0	0	0	0	
17	0	0	0	0	
18	0	0	0	0	
19	0	0	0	0	
20	0	0	0	0	
21	0	0	0	0	
22	0	0	0	0	
23	0	0	0	0	
24	0	0	0	0	plant shutdown 1:39 pm
25	0	0	0	0	plant startup 1:43
26	0	0	0	0	
27	0	0	0	0	
28	0	0	0	0	
29	0	0	0	0	
30	0	0	0	0	

Observer's Name (Print)	
Derrick Jones	
Observer's Signature: Derrick Jones	Date: Jan 31, 2017
Organization: HMG Engineers Inc.	
Certified By	Date

VEOF 1.1

EPA

VISIBLE EMISSION OBSERVATION FORM 1

Form Number						Page	Of
Continued on VEO Form Number							

Method Used (Circle One): Method 9 (circled) 203A 203B Other: _____

Company Name		
Facility Name		
Street Address		
City	State	Zip

Process	Unit #	Operating Mode
Control Equipment		Operating Mode

Describe Emission Point: Breaker reject

Height of Emiss. Pt. Start End	Height of Emiss. Pt. Rel. to Observer Start End
Distance to Emiss. Pt. Start End	Direction to Emiss. Pt. (Degrees) Start End
Vertical Angle to Obs. Pt. Start End	Direction to Obs. Pt. (Degrees) Start End
Distance and Direction to Observation Point from Emission Point Start End	

Describe Emissions Start End	
Emission Color Start End	Water Droplet Plume Attached ☐ Detached ☐ None ☐

Describe Plume Background Start End		
Background Color Start End	Sky Conditions Start End	
Wind Speed Start End	Wind Direction Start End	
Ambient Temp. Start End	Wet Bulb Temp.	RH Percent

Source Layout Sketch

Draw North Arrow ☐ TN ☐ MN

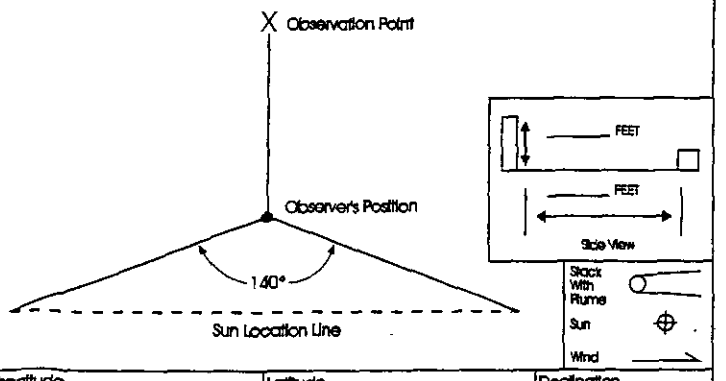

Longitude	Latitude	Declination

Additional Information

Observation Date	Time Zone	Start Time	End Time
Jan 31, 2017		9:07	9:37

Min \ Sec	0	15	30	45	Comments
1	0	0	0	0	
2	0	0	0	0	
3	0	0	0	0	
4	0	0	0	0	
5	0	0	0	0	
6	0	0	0	0	
7	0	0	0	0	
8	0	0	0	0	
9	0	0	0	0	
10	0	0	0	0	
11	0	0	0	0	
12	0	0	0	0	
13	0	0	0	0	
14	0	0	0	0	
15	0	0	0	0	
16	0	0	0	0	
17	0	0	0	0	
18	0	0	0	0	
19	0	0	0	0	
20	0	0	0	0	
21	0	0	0	0	
22	0	0	0	0	
23	0	0	0	0	
24	0	0	0	0	
25	0	0	0	0	
26	0	0	0	0	
27	0	0	0	0	
28	0	0	0	0	
29	0	0	0	0	
30	0	0	0	0	

Observer's Name (Print)	David Jones
Observer's Signature	David Jones — Date: Jan 31 2017
Organization	
Certified By	Date

VEOF 1.1

Appendix B – Method 9 Certification

Environmental Protection Agency
State of Illinois

This Certifies That

Kirschbaum, Tim

Has Completed the Course

Evaluation of Visible Emissions

16-10-034	October 12, 2016
Certification Number	*Certification Date*
Julie K Armitage	Alec Messina
Chief, Bureau of Air	Director

Environmental Protection Agency
State of Illinois

This Certifies That

Jones, Derick

Has Completed the Course

Evaluation of Visible Emissions

16-10-033	October 12, 2016
Certification Number	*Certification Date*
Julie K Armitage	Alec Messina
Chief, Bureau of Air	Director

Appendix C – Process Flow Diagram

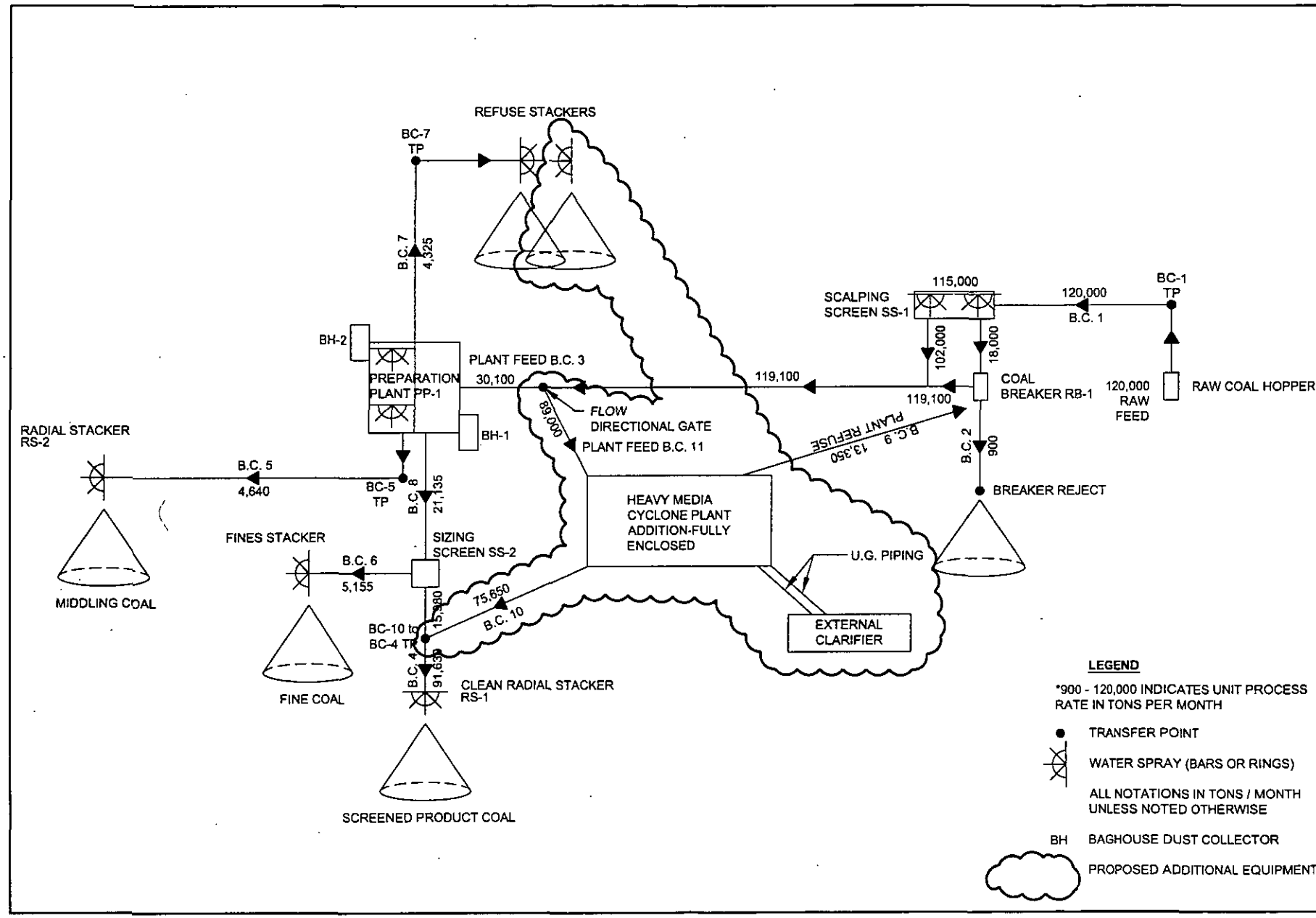
REFUSE STACKERS
BC-7 TP
B.C. 7
4,325
BH-2
PREPARATION PLANT PP-1
BH-1
PLANT FEED B.C. 3
30,100
89,000
FLOW DIRECTIONAL GATE
PLANT FEED B.C. 11
119,100
119,100
SCALPING SCREEN SS-1
115,000
102,000
18,000
120,000
B.C. 1
BC-1 TP
COAL BREAKER RB-1
120,000 RAW FEED
RAW COAL HOPPER
B.C. 2
900
BREAKER REJECT
B.C. 9
13,350
PLANT REFUSE
HEAVY MEDIA CYCLONE PLANT ADDITION-FULLY ENCLOSED
U.G. PIPING
EXTERNAL CLARIFIER
RADIAL STACKER RS-2
B.C. 5
4,640
BC-5 TP
B.C. 8
21,135
MIDDLING COAL
FINES STACKER
B.C. 6
5,155
SIZING SCREEN SS-2
FINE COAL
75,650
B.C. 10
BC-10 to BC-4 TP
B.C. 4
91,635
CLEAN RADIAL STACKER RS-1
SCREENED PRODUCT COAL
LEGEND
*900 - 120,000 INDICATES UNIT PROCESS RATE IN TONS PER MONTH
TRANSFER POINT
WATER SPRAY (BARS OR RINGS)
ALL NOTATIONS IN TONS / MONTH UNLESS NOTED OTHERWISE
BH BAGHOUSE DUST COLLECTOR
PROPOSED ADDITIONAL EQUIPMENT
REVISIONS
Rev. 1 11/13/2014
Rev. 2 04/14/2015
Rev. 3 06/17/2015
Rev. 2 02/21/2013
PLOT DATE 02/21/2013
DWG FILE
PROCESS FLOW DIAGRAM
EAGLE RIVER COAL PREPARATION PLANT
SALINE COUNTY, ILLINOIS
HMG ENGINEERS, INC.
1032 N. 6TH STREET
MURPHYSBORO, ILLINOIS 62966
(618) 684-9355 WWW.HMGENGINEERS.COM
SURVEY
DESIGN -
DRAWN -
CHECKED -
DATE -
SHEET 1
JOB NO. -

Marathon Petroleum Company LP

P.O. Box 1200
400 S. Marathon Avenue
Robinson, IL 62454
Tel: 618.544.2121

CERTIFIED MAIL - RETURN RECEIPT REQUESTED
CERTIFIED NO. 7016 1370 0001 9709 2027

March 10, 2017

Chief, Environmental Enforcement Section
Environmental and Natural Resources Division
U.S. Department of Justice
Box 7611 Ben Franklin Station
Washington, DC 20044-7611

Director, Air Enforcement Division
Office of Civil Enforcement
U.S. Environmental Protection Agency
Mail Code 2242-A
1200 Pennsylvania Avenue, N. W.
Washington, DC 20460

RECEIVED
MAR 14 2017
AIR ENFORCEMENT BRANCH
U.S. EPA REGION 5

Air and Radiation Division
EPA Region 5
77 W. Jackson Blvd. (AE – 17J)
Chicago, IL 60604
Attn: Compliance Tracker

U.S. Environmental Protection Agency
Office of Air Quality Planning and Standards
Sector Policies and Programs Division
U.S. EPA Mailroom (E143-01)
Attention: Refinery Sector Lead
109 T.W. Alexander Drive
Research Triangle Park, NC 27711

RE: IRD NSPS Subpart Ja Flare Management Plans – 84F-1, 5, and 6
Marathon Petroleum Company, LP

EPA Officials:

Pursuant to the reporting requirements of New Source Performance Standards (NSPS) Subpart Ja and the Flare Consent Decree (CD) between the U.S. Environmental Protection Agency (EPA) and Marathon Petroleum Company, LP (MPC) lodged on April 5, 2012 and entered in the United States District Court for the Eastern District of

Michigan on August 30, 2012, the Illinois Refining Division (IRD) hereby submits the the NSPS Subpart Ja Flare Management Plan for the 84F-1, 84F-5, and 84F-6 Cascaded Flare System.

Should you have any questions regarding this submittal, please contact Elizabeth Vaccari, Environmental Professional, at (618) 544-2121, Extension 5724, or Jerri Titsworth, Environmental Supervisor, at Extension 5279.

I certify under penalty of law that this document and all attachments were prepared under my direction or supervision in accordance with a system designed to assure that qualified personnel properly gather and evaluate the information submitted. Based on my inquiry of the person or persons who manage the system, or those persons directly responsible for gathering the information, the information submitted is, to the best of my knowledge and belief, true, accurate, and complete.

Sincerely,

Marathon Petroleum Company LP
By: MPC Investments LLC, General Partner

Kevin Bogard
Deputy Assistant Secretary
(618) 544-2121, Extension 5310

3-9-17
Date Signed

cc: Virginia King
Regional Manager (Collinsville Office)

Electronic cc: refinerynsps@epa.gov
parrish.robert@epa.gov
foley.patrick@epa.gov
dickens.brian@epa.gov
JFMarra@marathonpetroleum.com
RACade@marathonpetroleum.com
SABarnett@marathonpetroleum.com
JGBigham@marathonpetroleum.com
RBFrannz@marathonpetroleum.com

Marathon
Petroleum Company LP

NSPS Subpart Ja Flare Management Plan

84F-1, 84F-5, and 84F-6 Flares

Illinois Refining Division
400 S. Marathon Avenue
Robinson, Illinois

Revision 0

March 2017

New Source Performance Standards (NSPS) Subpart Ja – *Standards of Performance for Petroleum Refineries for Which Construction, Reconstruction, or Modification Commenced After May 14, 2007*, regulates flares that commenced construction, modification, or reconstruction after June 24, 2008. NSPS Subpart Ja contains work practice provisions that are applicable to refinery flares. On September 12, 2012, the revised NSPS Subpart Ja standards were published in the Federal Register including new work practice standards and applicability triggers for flares. The regulatory effective date for NSPS Subpart Ja is November 13, 2012. A newly constructed, reconstructed, or modified flare meeting the flare definition above must comply with NSPS Subpart Ja standards by the compliance date provided for each requirement. A written Flare Management Plant (FMP) is required to be developed and implemented, as required by the work practice standards of this rule, by no later than March 15, 2017.

Marathon Petroleum Company LP (MPC) owns and operates the Illinois Refining Division (IRD) in Robinson, Illinois. This document serves as the FMP for a cascaded flare system consisting of three flares: 84F-1, 84F-5, and 84F-6. During normal operations, the 84F-6 Flare generally acts as the primary flare, and 84F-1 and 84F-5 act as the secondary flares.

The aforementioned flares at the IRD have been determined to be subject to NSPS Subpart Ja requirements. This document addresses all the requirements of the rule including, but not limited to, the minimization assessment of all contributions to the flare header during normal operations and planned startups and shutdowns, a description of monitoring instrumentation and flare system parameters and specifications, an evaluation of the baseline flow to the flare, and an assessment of fuel gas system balancing.

As required by the rule, the IRD has elected to comply with the monitoring of flow and sulfur content. Also, IRD has identified the minimization alternatives that it has implemented by the due date of the FMP. The various requirements of the FMP, as listed in NSPS Subpart Ja, and the location in this document where they are addressed are summarized in Table 1.5 provided on page 8.

Table of Contents

1.0 Introduction 5
1.1 Facility Description 5
1.2 NSPS Subpart Ja Applicability 5
1.3 Revisions to the Flare Management Plan (FMP) 6
1.4 Flare Management Plan Contents 7
1.5 NSPS Subpart Ja FMP Requirements Cross-Reference 7
2.0 Description of Flare System 12
2.1 Flare Type 12
2.2 Flare Tip 12
2.3 Knockout Drums and Water Seals 16
2.4 Flare Header Description for 84F-2 and 84 F-3 Cascaded Flare System 17
2.5 Assist System 19
2.6 Ignition System 20
2.7 Vent Gas 20
2.8 Sweep and Purge Gas 20
2.8.1 Sweep Gas 20
2.8.2 Purge Gas 21
2.9 Pilot Gas 21
2.10 Supplemental Gas 21
2.11 Monitoring Instrumentation 21
2.11.1 Vent Gas Flow Monitoring 21
2.11.2 Sulfur Content 23
3.0 Flare Minimization 24
3.1 Description of Contributions to Flare Header 24
3.2 Minimization Assessment 24
3.2.1 Operator Tools 24
3.2.2 Preventative Maintenance and Operations 25
3.2.3 Acoustic Surveys and Flare System Mapping 25
3.2.4 Minimization of Sweep Gas and Purge Gas Rates 26

3.2.5 Battery Limit Sample Stations 26
3.3 Baseline Flow Evaluation 26
3.3.1 Alternative Baseline Evaluation 27
3.4 Startup and Shutdown 27
3.4.1 Unit Shutdown (Depressurization) Procedures 27
3.4.2 Unit Startup (Pressurization) Procedures 29
3.5 Fuel Gas Imbalance 30
3.6 Refinery-Wide Relief System Evaluation 30
A1.0 Description of Streams to the 84F-1, 84F-5, and 84F-6 Flares 32
A1.1 Crude Unit (Unit 1) 32
A1.2 Ultrafiner (Unit 2) 34
A1.3 Ultraformer (Unit 3) 35
A1.4 Unicracker (Unit 4) 38
A1.5 HF Alkylation (Unit 7) 40
A1.6 #1 Sats Gas (Unit 8) 41
A1.7 LPG Merox Treaters (Unit 11) 42
A1.8 Naphtha Hydrotreater/Platformer (Unit 16) 43
A1.9 Tank Farm (Unit 21) 45
A1.10 #2 Sats Gas (Unit 23) 45
A1.11 Benzene Extraction Unit (Unit 42) 46
A1.12 Diesel/LCO Hydrotreater (Unit 69) 47
A1.13 MTBE (Unit 71) 48
A1.14 Fluidized Catalytic Cracking Unit (Unit 82) 49
A2.0 Revision and Review Record 51

1.0 Introduction

1.1 Facility Description

Marathon Petroleum Company LP (MPC) owns and operates the Robinson Refinery located at 400 South Marathon Avenue in Robinson, Illinois. The facility refines crude oil into various petroleum products and is organized into several groups of process units designed to maximize the production of transportation fuels. The refining process utilizes physical and chemical reactions which require high temperatures and/or pressures. A critical element of most process equipment is pressure relief devices used to ensure that the process equipment does not exceed its designed maximum pressure, creating a safety hazard. To limit the emission of hydrocarbon constituents from these relief devices, the gases released through the relief devices are collected in a header system and processed safely in a refinery flare system. Refinery flares are designed to handle an extremely wide range of gas flow rates and compositions which may result from emergency conditions or leaks in relief devices. Flare system designs and configurations vary greatly depending on the application and specific conditions of the associated process units. A typical flare system consists of the following equipment:

- A common header to collect and route the gas from process units to the flare;
- A knockout drum to remove entrained liquids from the process gases;
- A flare stack to elevate the combustion location;
- An igniter system to ignite the flare as needed; and
- An assist system to promote smokeless flaring.

The combination of these elements is essential for achieving the desired reduction in air pollution while minimizing the risk to refinery employees and neighbors.

Although flares serve important safety and air pollution control functions at refineries, they can be significant sources of emissions. For this reason, the United States Environmental Protection Agency (U.S. EPA) has promulgated New Source Performance Standards (NSPS) 40 CFR 60 Subpart Ja Standards of Performance for Petroleum Refineries (NSPS Subpart Ja) which includes work practices for flare operation.

1.2 NSPS Subpart Ja Applicability

NSPS Subpart Ja regulates flares that commenced construction, modification, or reconstruction after June 24, 2008[1,2]. Pursuant to 40 CFR 60.101a, a flare is defined as follows:

[1] NSPS Subpart Ja also regulates fluid catalytic cracking units (FCCU), fluid coking units (FCU), fuel gas combustion devices (including process heaters), and sulfur recovery plants that commenced construction, modification, or reconstruction after May 14, 2007. In addition, NSPS Subpart Ja regulates delayed coking units that commenced construction, reconstruction, or modification as specified in 40 CFR 60.100a(a)(1) through (3).

[2] Definitions for *construction* and *reconstruction* are provided in NSPS Subpart A. The definition for *modification* is provided in NSPS Subpart Ja.

> "*Flare* means a combustion device that uses an uncontrolled volume of air to burn gases. The *flare* includes the foundation, flare tip, structural support, burner, igniter, flare controls, including air injection or steam injection systems, flame arrestors, and the flare gas header system. In the case of an interconnected flare gas header system, the *flare* includes each individual flare serviced by the interconnected flare gas header system and the interconnected flare gas header system."

A newly constructed, reconstructed, or modified flare meeting the flare definition above must comply with NSPS Subpart Ja standards by the compliance date provided for each requirement.

The cascaded flare system covered by this Flare Management Plan (FMP) is subject to NSPS Subpart Ja, and the IRD is required to develop and implement a written FMP for this system [40 CFR 60.103a(a) and (b)] no later than March 15, 2017. This document serves as the FMP for 84F-1, 84F-5, and 84F-6. The description of each of these flares is contained in more detail in the sections below.

1.3 Revisions to the Flare Management Plan (FMP)

The IRD must revise the FMP as described below, per 40 CFR 60.103a(b)(2). Depending on the significance of the change, the revised plan may require submittal to the Administrator. The purpose of this section is to outline when revisions are required and when a revised FMP must be submitted.

As information supplied in the FMP changes, revisions should be made to improve it. Thus, best practice calls for periodic reviews to identify necessary updates. Further, changes that require an FMP update will be identified as a result of the Management of Change (MOC) program at the IRD. This allows the IRD to more quickly identify changes, implement updates, and submit a revised FMP when necessary.

Pursuant to 40 CFR 60.103a(b)(2), the revised FMP only needs to be resubmitted for one of the following types of changes:

1) Revision to an existing baseline;
2) Addition of an alternative baseline;
3) To address a new FGRS; or
4) To change flare designations and monitoring methods.

In addition to U.S. EPA Region V, FMP submittals must also be made to U.S. EPA OAQPS either electronically to *refinerynsps@epa.gov* or in hard copy to the following address:

U.S. Environmental Protection Agency
Office of Air Quality Planning and Standards
Sector Policies and Programs Division
U.S. EPA Mailroom (E143-01)
Attention: Refinery Sector Lead
109 T.W. Alexander Drive
Research Triangle Park, NC 27711

Appendix A2.0 is a revision log to document revisions to this FMP, including those that do not require an agency submittal.

1.4 Flare Management Plan Contents

This FMP fulfills the requirements of NSPS Subpart Ja regarding the development of a written FMP and has been prepared pursuant to the requirements and provisions of the rule, including 40 CFR 60.103a(a). Additional supplemental information is also included to fully document the management practices and flare minimization measures and strategies in place at the refinery.

1.5 NSPS Subpart Ja FMP Requirements Cross-Reference

Table 1.5: 40 CFR Subpart Ja Flare Management Plan Cross-Reference Table

40 CFR Part 60 Subpart Ja Citation	Regulation	Location where Citation is Addressed in Document
60.103a(a)(1)	A listing of all refinery process units, ancillary equipment, and fuel gas systems connected to the flare for each affected flare.	Appendix A1.0
60.103a(a)(2)	An assessment of whether discharges to affected flares from these process units, ancillary equipment and fuel gas systems can be minimized. The flare minimization assessment must (at a minimum) consider the items in paragraphs (a)(2)(i) through (iv) of this section. The assessment must provide clear rationale in terms of costs (capital and annual operating), natural gas offset credits (if applicable), technical feasibility, secondary environmental impacts and safety considerations for the selected minimization alternative(s) or a statement, with justifications, that flow reduction could not be achieved. Based upon the assessment, each owner or operator of an affected flare shall identify the minimization alternatives that it has implemented by the due date of the flare management plan and shall include a schedule for the prompt implementation of any selected measures that cannot reasonably be completed as of that date.	See Below for (i) – (iv) Section 3.0
60.103a(a)(2)(i)	Elimination of process gas discharge to the flare through process operating changes or gas recovery at the source.	Sections 3.1, 3.2, 3.4, 3.5, & 3.6
60.103a(a)(2)(ii)	Reduction of the volume of process gas to the flare through process operating changes.	Sections 3.1, 3.2, 3.4, 3.5, & 3.6
60.103a(a)(2)(iii)	Installation of a flare gas recovery system or,	Section 3.2

	for facilities that are fuel gas rich, a flare gas recovery system and a co-generation unit or combined heat and power unit.	
60.103a(a)(2)(iv)	Minimization of sweep gas flow rates and, for flares with water seals, purge gas flow rates.	Section 3.2.4
60.103a(a)(3)	A description of each affected flare containing the information in paragraphs (a)(3)(i) through (vii) of this section.	See Below for (i) – (vii)
60.103a(a)(3)(i)	A general description of the flare, including the information in paragraphs (a)(3)(i)(A) through (G) of this section.	See Below for (i)(A) – (i)(G)
60.103a(a)(3)(i)(A)	Whether it is a ground flare or elevated (including height)	2.1.A
60.103a(a)(3)(i)(B)	The type of assist system (e.g., air, steam, pressure, non-assisted)	2.1.B
60.103a(a)(3)(i)(C)	Whether it is a simple or complex flare tip (e.g., staged, sequential)	2.1.C
60.103a(a)(3)(i)(D)	Whether the flare is part of a cascaded flare system (and if so, whether the flare is primary or secondary)	2.1.D
60.103a(a)(3)(i)(E)	Whether the flare serves as a backup to another flare	2.1.D
60.103a(a)(3)(i)(F)	Whether the flare is an emergency flare or a non-emergency flare	2.1.E
60.103a(a)(3)(i)(G)	Whether the flare is equipped with a flare gas recovery system	2.1.F
60.103a(a)(3)(ii)	Description and simple process flow diagram showing the interconnection of the following components of the flare: flare tip (date installed, manufacturer, nominal and effective tip diameter, tip drawing); knockout or surge drum(s) or pot(s) (including dimensions and design capacities); flare header(s) and subheader(s); assist system; and ignition system.	Flare Tip: Section 2.2 KO Drums: Section 2.3 Flare Headers: Section 2.4 and A1.0 Simple PFD: Section 2.4 Assist System: Section 2.5 Ignition System: Section 2.6
60.103a(a)(3)(iii)	Flare design parameters, including the maximum vent gas flow rate; minimum sweep gas flow rate; minimum purge gas flow rate (if any); maximum supplemental gas flow rate; and, if the flare is steam-assisted, minimum total steam rate.	Vent Gas: Section 2.7 Sweep Gas: 2.8.1 Purge Gas: 2.8.2 Supplemental Gas: Section 2.10 Steam Assist: Section 2.4
60.103a(a)(3)(iv)	Description and simple process flow diagram showing all gas lines (including flare, purge (if applicable), sweep, supplemental and pilot gas) that are associated with the flare. For	Section 2.4

	purge, sweep, supplemental and pilot gas, identify the type of gas used. Designate which lines are exempt from sulfur, H2S or flow monitoring and why (e.g., natural gas, inherently low sulfur, pilot gas). Designate which lines are monitored and identify on the process flow diagram the location and type of each monitor.	
60.103a(a)(3)(v)	For each flow rate, H2S, sulfur content, pressure or water seal monitor identified in paragraph (a)(3)(iv) of this section, provide a *detailed description of the manufacturer's* specifications, including, but not limited to, make, model, type, range, precision, accuracy, calibration, maintenance and quality assurance procedures.	Section 2.12
60.103a(a)(3)(vi)	For emergency flares, secondary flares and flare equipped with a flare gas recovery system designed, sized and operated to capture all flows except those resulting from startup, shutdown or malfunction:	See Below for (vi)(A) – (vi)(B)
60.103a(a)(3)(vi)(A)	Description of the water seal, including the operating range for the liquid level.	Section 2.3
60.103a(a)(3)(vi)(B)	Designation of the monitoring option elected (flow and sulfur monitoring or pressure and water seal liquid level monitoring).	Section 2.12
60.103a(a)(3)(vii)	For flares equipped with a flare gas recovery system:	See Below for (vii)(A) – (vii)(C)
60.103a(a)(3)(vii)(A)	A description of the flare gas recovery system, including number of compressors and capacity of each compressor.	Section 2.11
60.103a(a)(3)(vii)(B)	A description of the monitoring parameters used to quantify the amount of flare gas recovered.	Section 2.11
60.103a(a)(3)(vii)(C)	For systems with staged compressors, the maximum time period required to begin gas recovery with the secondary compressor(s), the monitoring parameters and procedures used to minimize the duration of releases *during compressor staging and a justification* for why the maximum time period cannot be further reduced.	N/A
60.103a(a)(4)	An evaluation of the baseline flow to the flare. The baseline flow to the flare must be determined after implementing the minimization assessment in paragraph (a)(2)	See Below for (i) – (iii)

	of this section. Baseline flows do not include pilot gas flow or purge gas flow (i.e. gas introduced after the flare's water seal) provided these gas flows remain reasonably constant (i.e. separate flow monitors for these streams are not required). Separate baseline flow rates may be established for different operating conditions provided that the management plan includes:	
60.103a(a)(4)(i)	A primary baseline flow rate that will be used as the default baseline for all conditions except those specifically delineated in the plan.	Section 3.3
60.103a(a)(4)(ii)	A description of each special condition for which an alternate baseline is established, including the rationale for each alternate baseline, the daily flow for each alternate baseline and the expected duration of the special conditions for each alternate baseline; and	Section 3.3.1
60.103a(a)(4)(iii)	Procedures to minimize discharges to the affected flare during each special condition described in (a)(4)(ii) of this section, unless procedures are already developed for these cases under paragraph (a)(5) through (7) of this section, as applicable.	Section 3.3.1
60.103a(a)(5)	Procedures to minimize or eliminate discharges to the flare during the planned startup and shutdown of the refinery process units and ancillary equipment that are connected to the affected flare, together with a schedule for the prompt implementation of any procedures that cannot reasonably be implemented as of the date of the submission of the flare management plan.	Section 3.4
60.103a(a)(6)	Procedures to reduce flaring in cases of fuel gas imbalance (i.e., excess fuel gas for the refinery's energy needs), together with a schedule for the prompt implementation of any procedures that cannot reasonably be implemented as of the date of submission of the flare management plan.	Section 3.5
60.103a(a)(7)	For flares equipped with flare gas recovery systems, procedures to minimize the frequency and duration of outages of the flare gas recovery system and procedures to	N/A

	minimize the volume of gas flared during such outages, together with a schedule for the prompt implementation of any procedures that cannot reasonably be implemented as of the date of submission of the flare management plan.	

2.0 Description of Flare System

2.1 Flare Type

2.1.A Ground or Elevated

The 84F-1, 84F-5, and 84F-6 Flares are all elevated flares. The 84F-1 Flare stack stands 200' tall and has a diameter of 24". The 84F-5 Flare stack stands 200' tall and has a diameter of 30". The 84F-6 Flare stands 250' tall and has a diameter of 36".

2.1.B Type of Assist System

The 84F-1, 84F-5, and 84F-6 Flares are steam-assisted flares and all use center steam, which does not vary with flaring rate, to establish the position of the flame. 84F-1 and 84F-6 utilize upper and lower steam to assist in smokeless flaring. 84F-5 utilizes only upper steam to assist in smokeless flaring.

2.1.C Simple or Complex Flare Tip

The 84F-1, 84F-5, and 84F-6 Flares each use a simple flare tip.

2.1.D Cascaded Flare System

The three flares are cascaded flares and are currently staged such that the 84F-6 Flare is the primary flare with the 84F-1 and 84F-5 Flares as secondary flares. This integration is maintained by manipulating the levels in the water seals, which provide back pressure on the flare header. 84F-6 is currently utilized as the primary flare by maintaining a lower level, and thus head pressure, on its water seal, directing the flare gas flow to this flare. Flares 84F-1 and 84F-5 can also each be staged as the primary flare by adjusting their respective water seals. This arrangement is typically used to perform maintenance on 84F-6.

2.1.E Emergency or Non-Emergency

The 84F-1, 84F-5, and 84F-6 Flares are non-emergency flares.

2.1.F Flare Gas Recovery System

There is currently no flare gas recovery system associated with the 84F-1, 84F-5, and 84F-6 Flares; however, MPC is currently engineering and installing a flare gas recovery system that will be operational by no later than December 31, 2017. MPC will resubmit an updated FMP once installation of the flare gas recovery system is complete.

2.2 Flare Tip

Any gas routed to 84F-1 Flare passes through the base of the flare stack and to the simple flare tip. Any gas routed to 84F-5 or 84F-6 Flares passes through the base of the flare stack and then flows through a molecular seal chamber to the simple flare tip [40 CFR 60.103a(a)(3)(i)(C)]. The following subsections summarize the design of each flare tip, as required in 40 CFR 60.103a(a)(3)(ii).

The 84F-1 Flare utilizes a John Zink Smokeless EEF-QS-SA-30/24C flare tip assembly, shown in Figure 2.2.1, which was installed in 1993. The top diameter (nominal) measures 36", the bottom measures 24". *The tip is equipped with upper, lower, and center steam connections. The unobstructed area of the tip is* 590 in^2, which yields an effective tip diameter of 27.4".

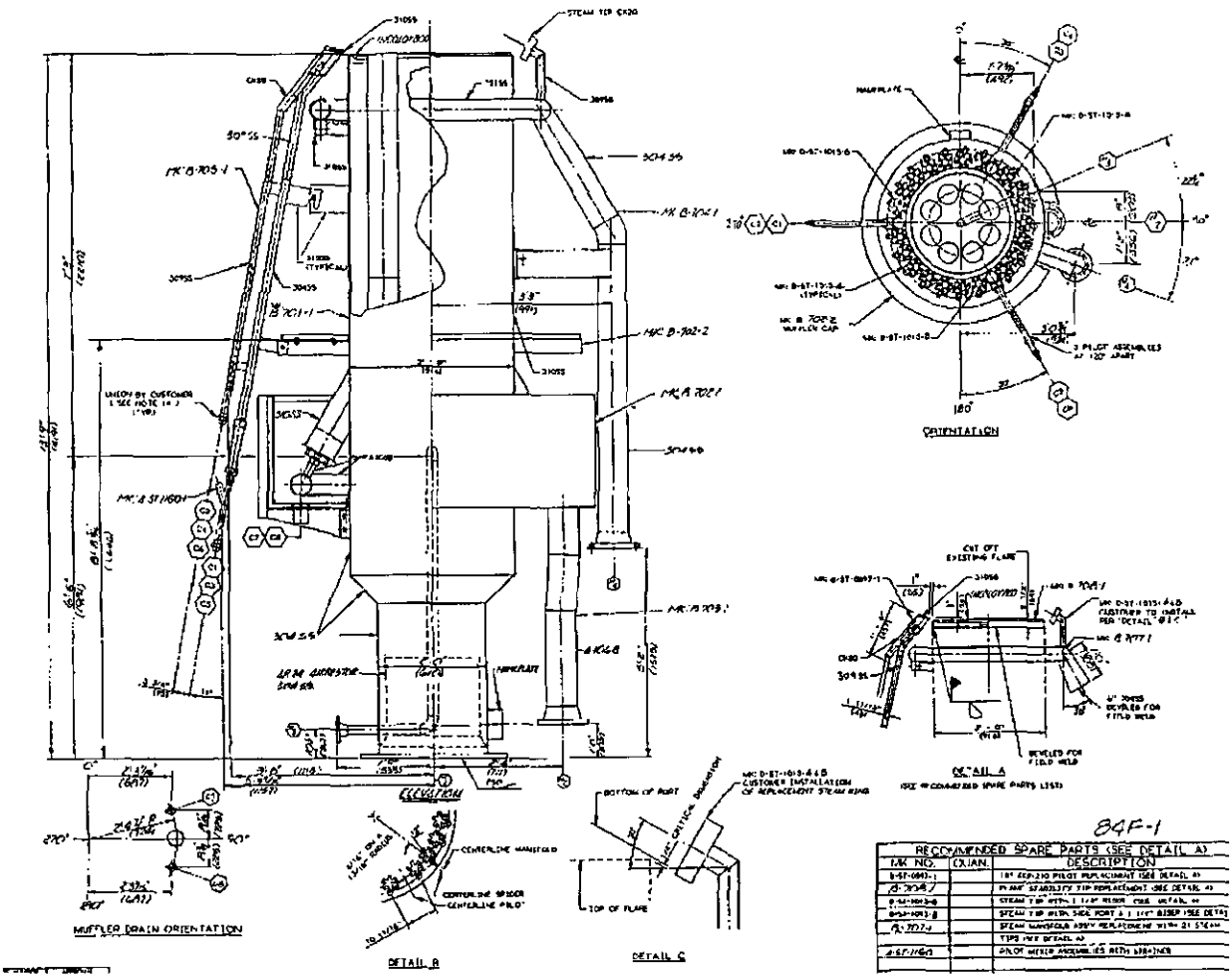

Figure 2.2.1: 84F-1 Flare Tip

The 84F-5 Flare utilizes a John Zink Smokeless EEF-QS-30" flare tip assembly, shown in Figure 2.2.2, which was installed in 2001. The diameter (nominal) measures 30". The tip is equipped with upper and center steam connections. The unobstructed area of the tip is 581 in^2, which yields an effective tip diameter of 27.2".

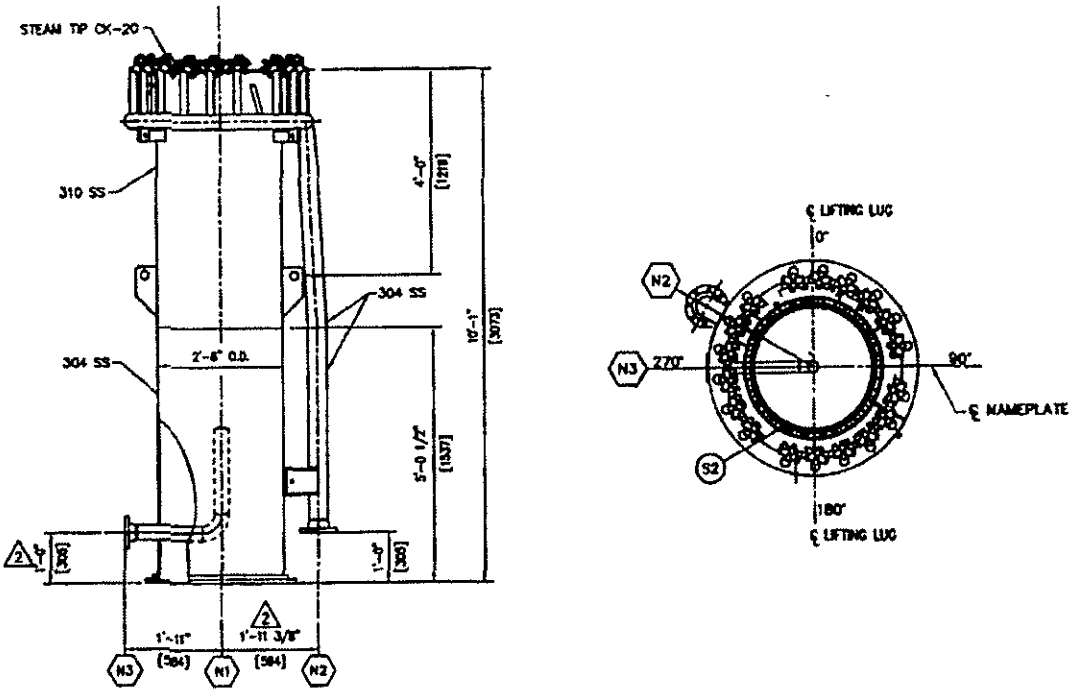

Figure 2.2.1: 84F-5 Flare Tip

The 84F-6 Flare utilizes a John Zink Smokeless EEF-QS-SA-36C flare tip assembly, shown in Figure 2.2.3, which was installed in 1993. The diameter (nominal) measures 43". The tip is equipped with upper, center, and lower steam connections. The unobstructed area of the tip is 981 in^2, which yields an effective tip diameter of 35.3".

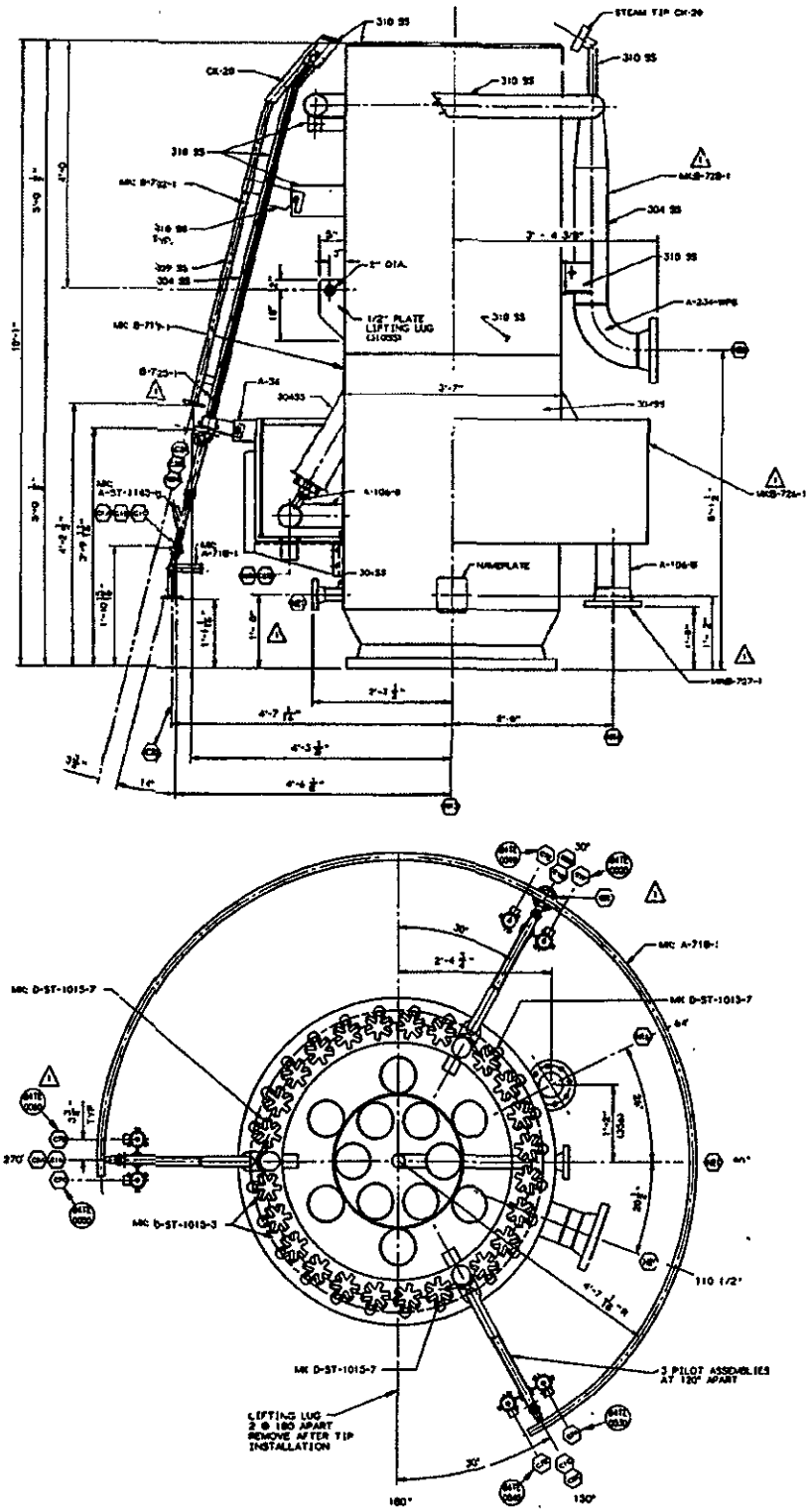

Figure 2.2.1: 84F-6 Flare Tip

2.3 Knockout Drums and Water Seals

The knockout (KO) drum for the 84F-1 and 5 Flares, 84C-1, is a horizontal vessel 11' in diameter and 37' in length tangent-to-tangent. 84C-1 has an internal design pressure of 50 psig at 650°F. The design capacity of the KO drum is 31,500 gallons. The vessel was last replaced in 2004.

The KO drum for the 84F-6 Flare, 84C-15, is a horizontal vessel 12' in diameter and 60' in length tangent-to-tangent. 84C-15 has an internal design pressure of 50 psig at 700°F. The design capacity of the KO drum is 57,500 gallons. The vessel was last replaced in 1993.

The 84F-1 and 5 Flares water seal, 84C-5A/B, is a double liquid seal as shown in Figure 2.3.1. The 84C-5A/B Water Seal has a diameter of 12' and a tangent-to-tangent length of 18'10.5". 84C-5A/B has an internal design pressure of 50 psig at 650°F. The vessel was installed in 1987. The operating range of the liquid level in the 84C-5A Water Seal, which serves as the seal for the 84F-1 Flare is 1' to 4'10". The operating range of the liquid level in the 84C-5B Water Seal, which serves as the seal for the 84F-5 Flare is 2'1/2" to 4'6". These are heights above the bottom tangent line of the water seal.

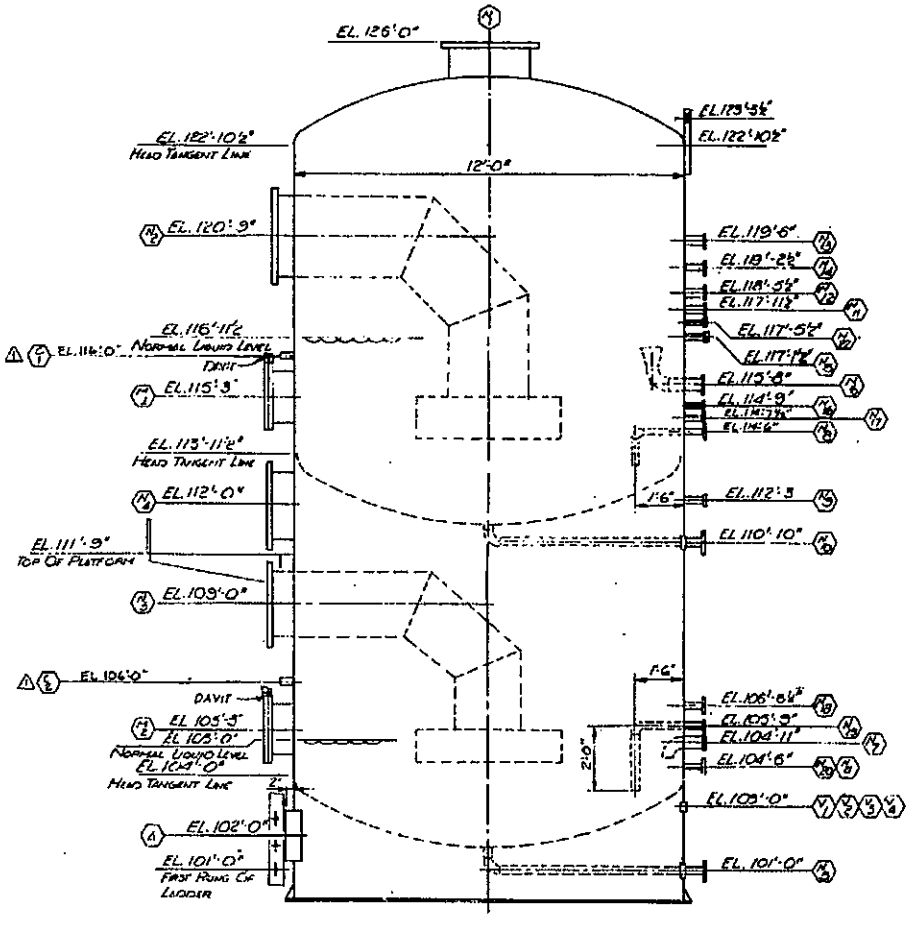

Figure 2.3.1: 84F-1 and 5 Water Seals (84C-5A/B)

The 84F6 Flare water seal, 84C-18, is internal to the 84F-6 Flare stack. The 84C-18 Water Seal has a diameter of 10'10" and a nominal length of 11'3". 84C-18 has an internal design pressure of 50 psig at 650°F. The vessel was installed in 1993. The operating range of the liquid level in the 84C-18 Water Seal, which serves as the seal for the 84F-6 Flare is 1'7" to 3'1". These are heights above the bottom tangent line of the water seal.

2.4 Flare Header Description for 84F-2 and 84 F-3 Cascaded Flare System

The 84F-1, 84F-5, and 84F-6 Flares share a common 36" header. Vent gas flow is determined by manipulating water seal levels. As a result, all vent gas flows entering the combined header could be flared at each of the three flares. Table 2.4.1 identifies the process units that may be routed to the 84F-1, 5, and 6 Flare Header. Figure 2.4.1 shows a simplified process flow diagram for the cascaded flare system. Figure 2.4.2 shows a simplified process flow diagram of typical flare gas flows including purge gas, supplemental gas, and pilot gas. A listing of all refinery process units, ancillary equipment, and fuel gas systems connected to the flare is located in Appendix A1.0, per the requirements in 60.103a(a)(1).

Table 2.4.1: *Process Units Connected to the 84F-1, 5, and 6 Cascaded Flare System*

Unit Number	Process Unit
1	Crude Unit
2	Ultrafiner
3	Ultraformer
4	Unicracker
7	HF Alkylation
8	#1 Sats Gas
11	LPG Merox Treaters
16	Platformer/Naphtha Hydrotreater
21	Tank Farm
23	#2 Sats Gas
42	Benzene Extraction Unit
69	Diesel/LCO Hydrotreater
71	MTBE
82	Fluidized Catalytic Cracker Unit

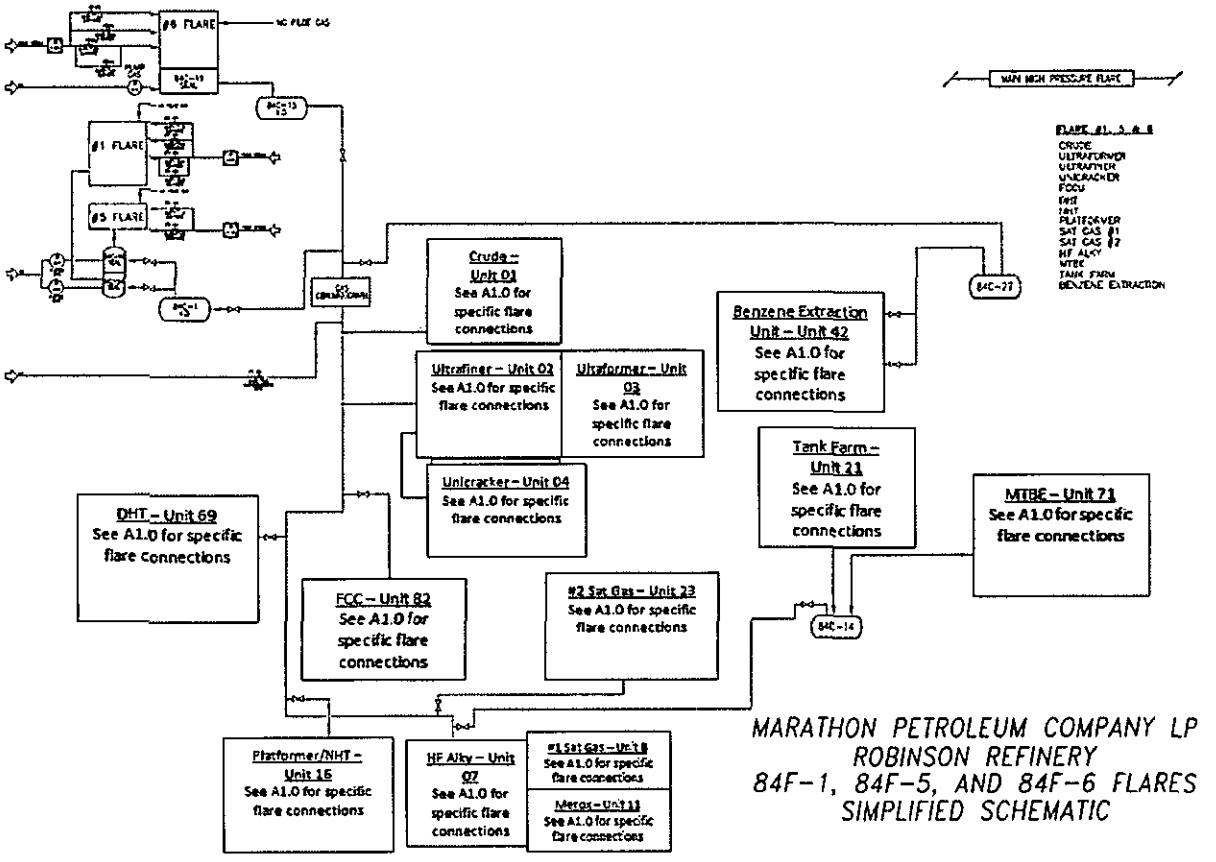

Figure 2.4.1: Simplified Process Flow Diagram for the 84F-1, 5, and 6 Cascaded Flare System

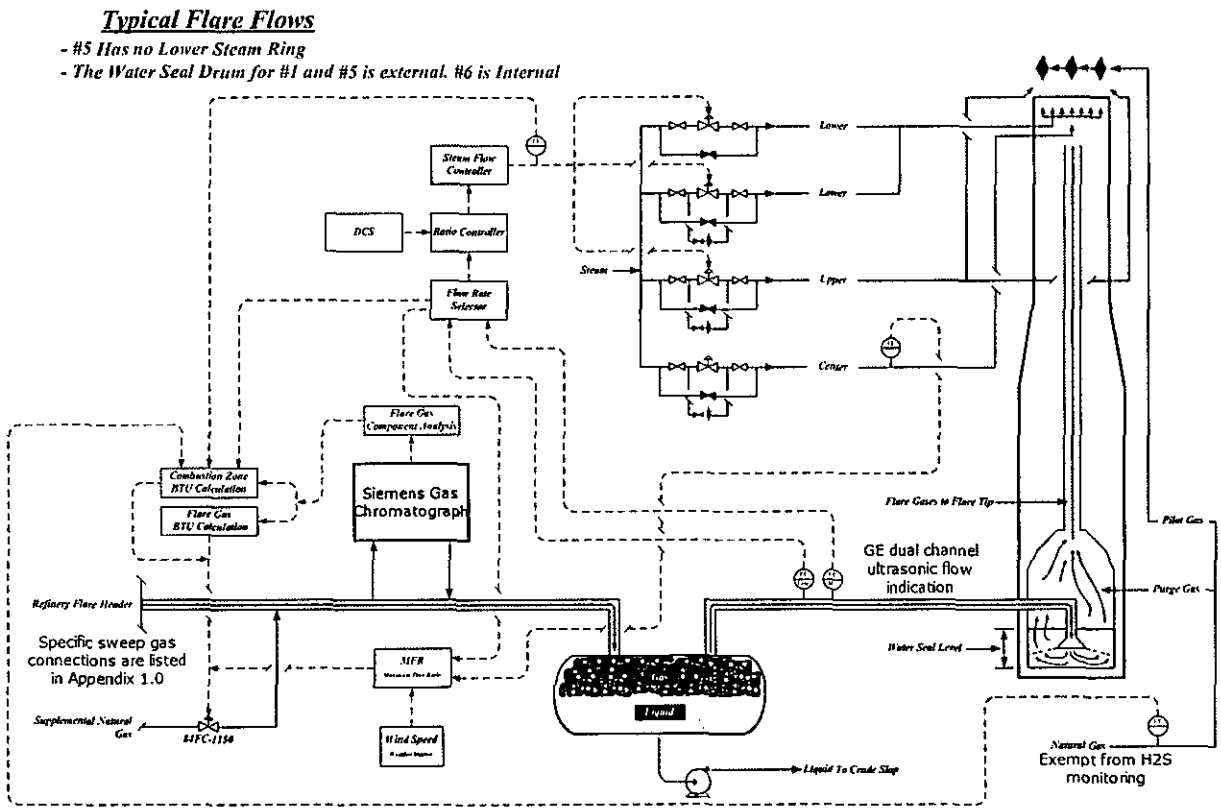

Figure 2.4.2: Simplified Process Flow Diagram for the 84F-1, 5, and 6 Cascaded Flare System

2.5 Assist System

The 84F-1 Flare and the 84F-5 Flares are steam assisted flares using 150 psig steam for lower (84F-5 has no lower steam connection), upper, and center steam. The 84F-6 Flare is steam assisted and uses 600 psig steam for lower, upper, and center steam. The center steam serves to establish the position of the flame and to prevent oxygen ingress and is generally held constant. During cold weather (ambient temperature less than 20°F), center steam is blocked in to prevent condensation in the flare tip or molecular seal. This necessitates an increase to the purge gas flow rate to ensure proper flame position and prevent internal burning.

Lower and upper steam flow rates are variable and dependent on both vent gas flow rate and composition to ensure smokeless operation. A series of 3 control valves is used to control steam addition to first the lower steam manifold and, as steam demand increases, to the upper steam manifold. Adding steam to the lower steam manifold first is necessary to prevent capping from excessive upper steam.

The minimum total steam assist rate for 84F-1 Flare is 1465 lb/hr when center steam is in operation. This is calculated based on 565 lb/hr to the lower steam ring, 500 lb/hr to the center steam ring, and 400 lb/hr to the upper steam ring. In cold weather, center steam is blocked in, and the minimum steam rate decreases to 965 lb/hr.

The minimum total steam assist rate for 84F-5 Flare is 900 lb/hr when center steam is in operation. This is calculated based on 450 lb/hr to the lower and center steam ring. In cold weather, center steam is blocked in, and the minimum steam rate decreases to 450 lb/hr.

The minimum total steam assist rate for 84F-6 Flare is 1700 lb/hr when center steam is in operation. This is calculated based on 600 lb/hr to the lower steam ring, 500 lb/hr to the center steam ring, and 600 lb/hr to the upper steam ring. In cold weather, center steam is blocked in, and the minimum steam rate decreases to 1200 lb/hr.

All minimum steam rates are determined by the manufacturer.

2.6 Ignition System

Both the 84F-1, 84F-5, and 84F-6 Flares are equipped with a StackMatch ignition system which includes plasma resonance flame detection, providing instantaneous pilot flame verification for unmanned, automatic ignition, and micro flame front ignition.

2.7 Vent Gas

According to the flare manufacturer, John Zink, the smokeless capacity is 188,000 lb/hr for the 84F-1 Flare, 81,000 lb/hr for the 84F-5 Flare, and 171,000 lb/hr for the 84F-6 Flare. The maximum global relief load, based on calculations done by Siemens, is 396,400 lb/hr for the 84F-1 Flare, 741,100 lb/hr for the 84F-5 Flare, and 879,400 lb/hr for the 84F-6 Flare.

2.8 Sweep and Purge Gas

2.8.1 Sweep Gas

A total of 7,890 SCFH of sweep gas, metered by restriction orifices, is introduced to the 84F-1, 5, and 6 cascaded flare system at several locations throughout the refinery in order to maintain positive pressure in the flare header. Purchased natural gas is predominantly used for sweep gas, though refinery fuel gas is used at three locations. Table 2.8.1 lists the 84F-1, 5, and 6 header sweeps.

Table 2.8.1: Sweep Gas to 84F-1, 5, and 6 Cascaded Flare System

Orifice Number	Composition	Flow Rate (SCFH)
82FO-555	Purchased Natural Gas	582
82FO-554	Purchased Natural Gas	1682
7FO-526	Purchased Natural Gas	60
7FO-551	Purchased Natural Gas	585
42FO-503	Purchased Natural Gas	1406
42FO-504	Purchased Natural Gas	1406
69FO-514	Refinery Fuel Gas	723
69FO-515	Refinery Fuel Gas	723
69FO-512	Refinery Fuel Gas	723
	Total	**7,890**

2.8.2 Purge Gas

The minimum purge rate to the 84F-1 Flare is 434 SCFH. The minimum purge rate to the 84F-5 Flare is 171 SCFH. The minimum purge rate to the 84F-6 Flare is 247 SCFH.

2.9 Pilot Gas

NSPS Subpart Ja requires gas lines to the flare to be monitored to determine compliance with daily discharge limits provided in 40 CFR 60.103a(c)(1). 84F-1, 5, and 6 are equipped with flow and H2S monitors. As seen in Figures 2.4.1 and 2.4.2, the pilot gas stream is added after the monitors [40 CFR 60.103a(a)(3)(iv)]. The pilot gas is natural gas and therefore inherently low in sulfur per 40 CFR 60.107a(a)(3)(i). As such, the pilot gas stream is exempt from H_2S monitoring per 40 CFR 60.107a(a)(3)(i) and TRS monitoring per 40 CFR 60.107a(e)(4)(i)(A). Further, pilot gas flow is exempt from monitoring as it can be excluded from the baseline granted it remains reasonably constant per 40 CFR 60.103a(a)(4). Thus, no monitoring is required on the pilot gas lines.

All three flares utilize the StackMatch ignition system which monitors the flames and reignites as necessary to keep the pilots in operation. Pilot gas to each flare is approximately 75 SCFH. The restriction orifices on the StackMatch control system pilot gas dictate the pilot gas rate making the gas flow essentially constant. There are no bypasses around the restriction orifices that could lead to an increased flow rate.

2.10 Supplemental Gas

As depicted in Figures 2.4.1 and 2.4.2, natural gas can be added as supplemental gas to each flare to adjust the BTU value of the vent gas stream if there is excessive inert gas streams in the composition or if steam is being used on heavier hydrocarbons to prevent smoking of the flare. Supplemental gas is added at a maximum rate of 2,000 MSCFD to adjust the molecular weight and heat content of the gas, ensuring that the total flow achieves the necessary buoyancy and composition [40 CFR 60.103a(a)(3)(iii)]. (Note that the maximum design flow may not represent typical flow.) The frequency and magnitude of supplemental gas added to each flare is dependent on process vent gas composition.

2.11 Monitoring Instrumentation

The MPC Illinois Refining Division monitors flow for 84F-1, 84F-5, and 84F-6 per 40 CFR 60.107a(f) and monitors sulfur content for 84F-1, 84F-5, and 84F-6 per 40 CFR 60.107a(e).

2.11.1 Vent Gas Flow Monitoring

GE Panametrics ultrasonic flow meters are used to determine the volumetric flow rate of the vent gas on a continuous basis. The fundamental measurement of the flow meter is gas velocity. Volumetric flow is derived as the product of velocity and the cross-sectional area of the pipe and is determined independently of the gas composition. The volumetric flow rate is out put directly from the flow meter and no external calculations are required.

The flow meter is designed to measure flows from approximately 0.1 fps to approximately 280 fps. To retain maximum accuracy over the entire measurement range, a two-channel approach is used. For

flows greater than 1 fps, a sensor configuration called the "Bias 90" is typically used. For flows from 0.1 fps to 1 fps, a sensor configuration called the "Diagonal 45" is typically used. (Figure 2.12.1 displays these two configurations.) The Diagonal 45 configuration provides greater resolution due to its longer path length. Table 2.11.1 displays the Vent Gas Flow Monitor Specifications per GE [40 CFR 60.103a(a)(3)(v)].

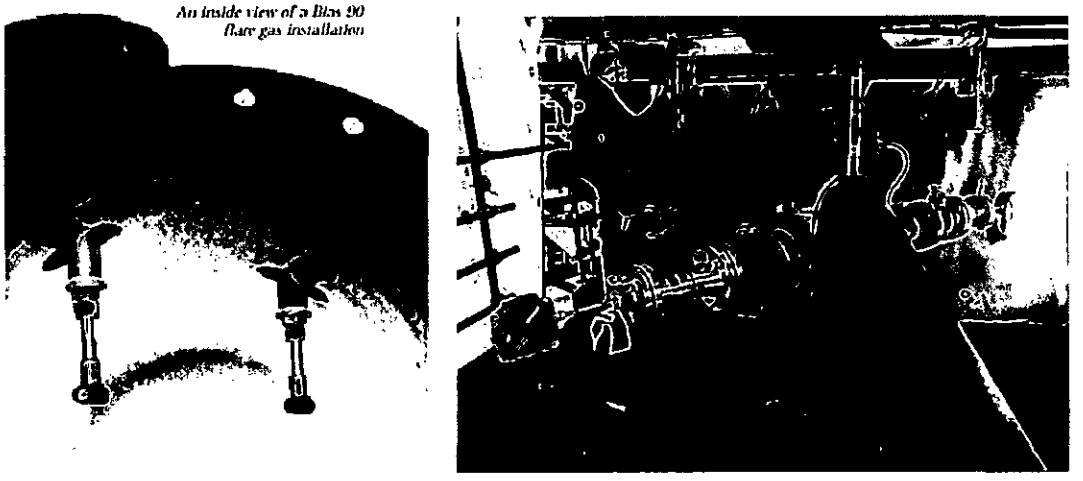

Figure 2.11.1: Bias 90 (left) and Diagonal 45 (right) Sensor Configuration.

Table 2.11.1: Vent Gas Flow Monitor Specifications

84F-1 Vent Gas Flow Meters	
Make	GE Digital Flow
Model	GM868
Type	Panametrics General Purpose Gas Ultrasonic Flowmeter
Range	0.1 – 280 ft/sec
Accuracy	± 1-2%
Repeatability	± 0.2-0.5%
84F-5 Vent Gas Flow Meters	
Make	GE Digital Flow
Model	GM868
Type	Panametrics General Purpose Gas Ultrasonic Flowmeter
Range	0.1 – 280 ft/sec
Accuracy	± 1-2%
Repeatability	± 0.2-0.5%
84F-6 Vent Gas Flow Meters	
Make	GE Digital Flow
Model	GM868
Type	Panametrics General Purpose Gas Ultrasonic Flowmeter
Range	0.1 – 280 ft/sec
Accuracy	± 1-2%
Repeatability	± 0.2-0.5%

The IRD will follow the manufacturer-recommended quality assurance activities; NSPS Appendix B, Performance Specifications 5 and 9; and NSPS Appendix F.

2.11.2 Sulfur Content

A Siemens Maxum II Gas Chromatograph was installed on the 84F-1, 5 and 6 common header to monitor the flare gas composition and heat content. This device provides an analytical data point approximately once every 10 minutes and can be accessed through PI Process Book. The wide range of component speciation allows the instrument to accurately identify the heating value, which can then be used within various Net Heating Value calculations.

The Siemens Maxum II Gas Chromatograph utilizes a thermal conductivity detector ("TCD") for measurement of vent gas composition. This TCD is also used for measurement of vent gas H_2S concentration up to five mole percent. Because the calibration range is so wide, the TCD is not expected to measure accurately at the low end of the range, where vent gas H_2S concentrations are expected during normal operations. A separate flame photometric detector ("FPD") installed in parallel is used to analyze vent gas H_2S concentrations over the range of 0 to 300 ppm H_2S.

Table 2.11.2: Sulfur Content Monitor Specifications [40 CFR 60.103a(a)(3)(v)]

84F-1 H_2S Monitor	
Make	Siemens
Model	Maxum II
Type	Gas Chromatograph Analyzer
Range	0-100 mol% H_2S
Span	0-5 mol% H_2S
Accuracy	Between 2-100%: ±0.5% Between 0.05-2%: ±1.0%
84F-5 H_2S Monitor	
Make	Siemens
Model	Maxum II
Type	Gas Chromatograph Analyzer
Range	0-100 mol% H_2S
Span	0-5 mol% H_2S
Accuracy	Between 2-100%: ±0.5% Between 0.05-2%: ±1.0%
84F-6 H_2S Monitor	
Make	Siemens
Model	Maxum II
Type	Gas Chromatograph Analyzer
Range	0-100 mol% H_2S
Span	0-5 mol% H_2S
Accuracy	Between 2-100%: ±0.5%

	Between 0.05-2%: ±1.0%

The IRD will follow the manufacturer-recommended quality assurance activities; NSPS Appendix B, Performance Specifications 5 and 9; and NSPS Appendix F.

3.0 Flare Minimization

3.1 Description of Contributions to Flare Header

The IRD has three separate flare headers, but as mentioned previously this document covers the 84F-1, 5, and 6 cascaded flare system. The flare header has equipment tie-ins located throughout the length of the flare header. A complete discussion on the flare contributors can be found in Section 2.4 and Appendix A1.0.

3.2 Minimization Assessment

The IRD completed a minimization assessment and has been actively reducing the amount of waste gas routed to the flare. The equipment tied to the 84F-1, 5, and 6 cascaded flare system, listed in Appendix A1.0, includes continuous, periodic, maintenance only, and emergency only sources. The following sources of flaring were identified and minimized:

- Turnaround, shutdown, and startup procedures;
- Process safety valves;
- Pump upgrades; and
- Miscellaneous equipment upgrades.

The minimization assessment reviewed the elimination of process gas discharges to the flare through process operating changes, the reduction of the volume of process gas to the flare through process operating changes, whether installation of a FGRS or, for facilities that are fuel gas rich, an FGRS and a co-generation unit or combined heat and power unit, as well as the minimization of sweep gas flow rates and, for flares with water seals, purge gas flow rates.

FGRS Implementation Cost Analysis

An analysis was performed to determine the cost effectiveness of implementing an FGRS for the 84F-1, 5, and 6 cascaded flare system, and MPC elected to install an FGRS to serve its 84F-1, 5 and 6 cascaded flare system at a total installed cost of approximately $35,000,000. MPC is currently engineering and installing an FGRS that will be operational by no later than December 31, 2017. MPC will resubmit an updated FMP once installation of the FGRS is complete.

3.2.1 Operator Tools

Scheduling flaring activities is critical to minimize flaring. The turnaround (e.g., shutdown and startup) of a process unit typically impacts the operation of upstream and downstream process units. It can also

impact the refinery's overall fuel gas balance since various processes can be net generators or net consumers of refinery fuel gas. Therefore, a significant amount of planning is necessary, considering the unit being shut down, the impact on other process units being left in operation, and the refinery's fuel gas balance. In addition, the charge rates on other process units can be adjusted in advance to reduce the volume of refinery fuel gas produced. This can also be accomplished by manipulation of other process variables such as temperature, pressure, and reflux ratio.

Alarms will alert operators when operations are approaching NSPS Subpart Ja limits of 162 part per million by volume (ppmv) of H_2S [40 CFR 60.103a(h)]. When informed by such an alarm, the operators must react to the incident causing the high H_2S. Furthermore, the IRD will be tracking the flow rate and SO2 per 24-hour period. The IRD personnel will be reviewing the tracking tool on a daily basis to determine if NSPS Subpart Ja limits of 500,000 scf/day total flow above the baseline and the 500 pound SO2 per any 24-hour period have been exceeded [40 CFR 60.103a(c)].

Lastly, reductions to peak flare volumes have been made by implementing new operating procedures, covering specific actions which can help minimize flaring. These include procedures for conducting blowdowns, opening valves to purge out a vessel, and determining the appropriate amount of nitrogen required for a purge.

The combined effects of these operator changes pursuant to 40 CFR 60.103a(a)(2)(ii) is to reduce the frequency of large flaring peaks.

3.2.2 Preventative Maintenance and Operations

An integral part of operations at the IRD is maintaining equipment and facilities in satisfactory operating conditions. A system of inspection, detection, and correction prior to the development of equipment issues, including equipment failure, is known as Preventative Maintenance. Equipment experts at the site establish preventative maintenance schedules to ensure the mechanical integrity of equipment and the reliable operation of such equipment.

The IRD conducts comprehensive operator training to properly prepare employees to operate equipment. In addition to initial training, the IRD requires operator "refresher" training to maintain the necessary knowledge and skills required to execute job tasks in a manner consistent with the safe and environmentally sound operation of the site.

In the event of an equipment malfunction/failure, operator error, or other process upset resulting in a significant flaring event (or "near miss"), the IRD will perform an Incident Investigation and Root Cause Analysis. The objective of this process is to learn from incidents, take corrective action, and prevent recurrence.

3.2.3 Acoustic Surveys and Flare System Mapping

An additional flare minimization effort is the practice of conducting acoustic surveys of accessible flare connections in order to detect leaks on an as-needed basis. If leaks are identified, valves are repaired as practicable.

Another effort to identify sources of flare gas, the installation of flow meters on the major trunk lines of each flare system has been successfully completed. When high flare gas flow rates are indicated at a flare stack, these flow meters aid in troubleshooting. These meters provide indication of the source of a vent gas. Along with this effort, other studies have been completed to verify flows on these major trunk lines.

3.2.4 Minimization of Sweep Gas and Purge Gas Rates

The IRD has also established minimum purge and sweep gas rates for safe operations of the refinery and has taken steps to operate the refinery as close as possible to these minimum rates.

Sweep gas is introduced in different locations in the flare headers. Sweep gas is introduced, as defined in NSPS Subpart Ja, to "prevent oxygen buildup in the flare header," which can lead to combustion in a location other than the flare tip. By maintaining the recommended minimum velocity, sweep gas eliminates pockets or dead spots from developing which can lead to an explosion. Restriction orifices in the supply piping are sized such that just the minimum needed gas is added. (See Section 2.8).

As defined in NSPS Subpart Ja, purge gas is "introduced between a flare's water seal and a flare's tip." The purpose of purge gas is to prevent oxygen from entering the flare tip and causing combustion inside the flare. The IRD attempts to maintain flow at the minimum rate determined by the manufacturer (See Section 2.8).

3.2.5 Battery Limit Sample Stations

Individual unit battery limit sample stations have been installed to assist in troubleshooting when high waste gas flows and/or hydrogen sulfide concentration is detected at the flares. These sample stations allow refinery operators to quickly and safely collect either draeger or bomb samples for compositional analysis.

3.3 Baseline Flow Evaluation

Flow monitor data was obtained from the calendar 2016 year in order to determine the baseline flow rate during routine flaring. Routine flaring also includes pilot, supplemental, and purge gases. However, pilot and purge gases are excluded from the baseline if they remain reasonably constant per 40 CFR 60.103a(a)(4). The IRD maintains pilot and purge gas flow rates as provided in Sections 2.9 and 2.8.2, respectively and maintains that these flow rates do remain reasonably constant and can be excluded from the baseline. However, the flow meters for the 84F-1 and 84F-5 Flares account for supplemental gas and purge gas. The flow meter for the 84F-6 Flare accounts for supplemental gas. Therefore, the established baseline for the 84F-1 and 84F-5 Flares includes supplemental gas and purge gas in addition to process gas, and the established baseline for the 84F-6 Flare includes supplemental gas in addition to process gas.

As such, the IRD has established that the normal baseline for the flare that is in primary service will be 60,000 SCFH.

3.3.1 Alternative Baseline Evaluation

NSPS Subpart Ja allows for the establishment of alternate baseline flow rates which represent different operating conditions. At this point in time, the IRD has identified two alternative baselines: excess hydrogen flaring from catalytic reformers and nitrogen flaring during the Ultraformer Regeneration process.

Table 3.3.1: Alternative Baselines

Operating Condition	Alternative Baseline Flow Rate (SCFH)	Expected Duration(1)
Hydrogen Flaring from Catalytic Reformers	1,050,000	30 days
Nitrogen Flaring from Ultraformer	163,000	10 days

(1) The expected duration of these events depends on the operation of the refinery and product demands.

3.4 Startup and Shutdown

3.4.1 Unit Shutdown (Depressurization) Procedures

Prior to depressurizing a process unit, a significant amount of planning is necessary. Alternate feed supplies are procured, charge rates of units are reduced, and for refineries that have multiple process units, arrangements with the other process units are made to accept streams that would be processed in the unit being shut down. As the shutdown begins, temperatures in the unit are reduced to minimize process temperature and pressure by turning off firing to process heaters. The IRD maintains individual process unit shutdown procedures that are utilized during shutdowns and are reviewed annually.

The goal of minimizing flaring during depressurization is achieved by recovering as much of the hydrocarbon vapors and liquids contained in the vessel as is possible, consistent with overriding safety considerations. This is accomplished through four (4) activities that are common to all shutdown procedures: liquid recovery, vapor recovery, vapor purge to flare, and vapor purge to atmosphere. These steps are described in detail below:

1. ***Liquid Recovery.*** *Liquids are recovered via pump out systems or pressurized out of low-lying valves and returned to storage tanks, vessels, liquid recovery systems, and/or refinery processes. Feed lines into the unit are closed to prevent additional liquids from entering. Outlet lines are closed as necessary to route liquids to their desired destination.*

The exact disposition of liquids in each shutdown procedure depends on the individual unit and the amount of liquids in each unit or vessel. Liquids with relatively low volatility, suitable for a storage tank, can be routed to feed storage tanks and slop oil recovery systems. Hydrocarbons that are liquids only at high pressure because of high volatility will typically be routed to pressurized systems for recovery. Storage vessels for "light ends," other process units, wet gas systems, fuel gas liquid knockout systems, and even the knockout drums on flare lines are equipped with various light liquid recovery systems.

2. ***Vapor Recovery.*** *Pressurized hydrocarbon gases are relieved into vapor recovery systems, fuel gas systems, and/or storage if such systems are practicably available. This step is complete when the pressure within the unit or vessel equals the pressure within the vapor recovery system.*

Many units or vessels operate at high pressures. Vapors from these units or vessels are relieved to available vapor recovery systems. Such systems include the refinery fuel gas system and various vapor processing units. Vapors with little condensable hydrocarbons are typically routed to the refinery fuel gas system.

The effectiveness of vapor recovery is limited by the pressure of the system receiving the released vapors. The step is complete when the pressure inside the unit or vessel equals the pressure within the vapor recovery system. The step is verified complete upon comparison of values from pressure gauges or indicators on the unit or vessel and the vapor recovery system.

3. ***Purge to Flare.*** *When pressures within equipment no longer provide for hydrocarbon recovery, when it is impractical to relieve hydrocarbon pressure to recovery systems, and/or when there is a significant risk of contamination of a clean stream with gases from the shutdown, pressurized hydrocarbon vapors are relieved and purged to a flare with an inert gas (i.e., nitrogen, steam). This step is complete when it is determined that no more hydrocarbons are being routed to the flare.*

Once the pressure of hydrocarbon vapors within the unit or vessel reaches the same pressure as the fuel gas system, there is no longer any safe means to push additional hydrocarbon vapors to the recovery system. Attempting to relieve low-pressure hydrocarbons into a low-pressure fuel gas system can result in backflow of hydrocarbons from the vapor recovery system into the unit or vessel. This could cause an increase of pressure and hydrocarbons in the unit or vessel for flaring or introduce contaminants that could affect catalyst and metallurgical integrity. Therefore, when pressures are too low to continue recovery through the fuel gas or vapor recovery systems, the hydrocarbon vapors are routed to the flare, pressurized out, and purged with an inert gas, usually steam or nitrogen.

4. ***Purge to Atmosphere.*** *Once hydrocarbons have been removed, the purge lines to the flare are closed. The unit and vessel vents to the atmosphere are opened.*

Inert gas purging is continued until all hydrocarbon vapors have been flushed from the unit or vessel. The unit or vessel must be verified as successfully purged before it is opened to the atmosphere. Verification is important because residual hydrocarbons could mix with air in the unit or vessel to create an explosive atmosphere. Once hydrocarbon removal has been verified, it is then safe to cease purging to the flare.

The unit or vessel outlets to the flare system are closed before any atmospheric vents or hatches are opened. This prevents the backflow of hydrocarbons from the flare system and any release to the atmosphere. If the unit or vessel is to be shut down only for a short period of time and no internal maintenance work is to be conducted, vents to the atmosphere may be kept closed after purging to

prevent unnecessary introduction of air. However, if steam is used for purging, the vessel vents will be opened to the atmosphere until the steam condenses to prevent the creation of a vacuum within the unit or vessel that could potentially cause an implosion.

3.4.2 Unit Startup (Pressurization) Procedures

In startup procedures, equipment is typically run through several purge cycles to atmosphere with an inert gas to remove oxygen. After the safe removal of oxygen, purge valves are closed and hydrocarbons are introduced from storage, fuel gas, and/or from refinery vapor recovery systems to purge the inert gas to the flare. Compared to shutdown, startup procedures typically result in much lower releases of hydrocarbons to the flare.

Similar to shutdown procedures, startup procedures are specific to individual process units or vessels. Startup procedures for any specific unit or vessel may vary from one startup to another, depending on the circumstances surrounding the maintenance activity. If air or purge gases have not been introduced into the unit or vessel during the course of the shutdown, the startup may not involve any hydrocarbon flaring. The following procedures describe startup of a unit following a shutdown in which the unit was opened to the atmosphere.

1. ***Inert Gas Purging and Leak Testing.*** *The initial procedure in starting up a unit or vessel is typically inert gas purging to the atmosphere. Purging is conducted to safely remove all air to create an oxygen-free atmosphere prior to recharging the unit or vessel with hydrocarbons.*

It is essential to remove all air before hydrocarbons are introduced in order to avoid the creation of an explosive air/hydrocarbon atmosphere inside the unit. All openings other than high-point vents and end-of-line vents are closed. With only high-point and end-of-line vent valves open, an inert gas, typically nitrogen, is introduced. The streams at the open vents are monitored periodically for oxygen content. Once acceptable levels are reached, the vents are closed.

The unit may then be leak tested. This is optional depending on the extent of work done on the unit. For extensive shutdowns, it is mandatory. To conduct a leak test, the unit or vessel is pressurized with the inert gas (typically nitrogen) to a pressure predetermined by engineering personnel, and the inert gas is then blocked out. Pressure gauges or indicators are observed over time for loss of pressure indicative of a potential leak. To conserve nitrogen, instead of a continuous purge of nitrogen, a unit or vessel may be pressurized using inert gas with all vent valves closed, including the high-point vents. After reaching a predetermined value, the inert gas inlet is closed. Selected vents are the opened to depressurize the equipment and release the inert gas and any contained oxygen. This step may be repeated several times with testing of the gas between each step until the oxygen concentration drops to an acceptable level as measured at the open vents or it may be performed a predetermined number of times as determined by operating experience to safely remove all air.

UNITED STATES ENVIRONMENTAL PROTECTION AGENCY
REGION 5
77 WEST JACKSON BOULEVARD
CHICAGO, IL 60604-3590

FEB 3 2014

REPLY TO THE ATTENTION OF:

Chris Longo
Regulatory Compliance Manager
GEM Mobile Treatment Services
1196 East Willow Street
Signal Hill, California 90755

RE: Request for Alternative Monitoring Plan
Standards of Performance for Petroleum Refineries, 40 C.F.R. Part 60, Subparts J and Ja

Dear Mr. Longo:

Thank you for your December 11, 2013 letter. Your letter requests the U.S. Environmental Protection Agency approve an alternative monitoring plan (AMP) to monitor hydrogen sulfide, H_2S, in refinery fuel gas during GEM Mobile Treatment Services' (GEM's) vapor control events at refineries. Since GEM's vapor control events are temporary, you say it is impractical and infeasible to perform the monitoring required by the New Source Performance Standards for Petroleum Refineries, Title 40 Part 60, Subparts J and Ja (NSPS Subparts J and Ja) and request an AMP for the services you provide at refineries in Region 5. EPA conditionally approves your request, as described in this letter.

Your letter requests a determination on whether EPA will approve the use of hand held H_2S monitors or calorimetric tube testing to meet the requirements in "Subpart Ja § 60.107a(2)" during temporary vapor control events such as tank degassing. In a subsequent email, you clarified that you intended to refer to the monitoring requirements set forth at 40 C.F.R. §§ 60.105(a)(4) and 60.107a(a)(2).

NSPS Subparts J and Ja require the owner or operator of a fuel gas combustion device (FGCD) to install, calibrate, maintain, and operate an instrument that continuously monitors and records the concentration of H_2S in the refinery fuel gases before being burned in a FGCD, 40 C.F.R. §§ 60.105(a)(4) and 60.107a(a)(2). In addition, NSPS Subparts J and Ja prohibit the owner or operator of a FGCD from burning any gas generated at a petroleum refinery that contains H_2S in excess of the following limits:

- 230 milligrams per dry standard cubic meter (40 CFR § 60.104(a)(1)); and
- 162 parts per million by volume (ppmv) determined hourly on a 3-hour rolling average basis, and 60 ppmv determined daily on a 365-successive calendar day rolling average basis (40 CFR § 60.102a(g)(1)(ii)).

Recycled/Recyclable • Printed with Vegetable Oil Based Inks on 100% Recycled Paper (100% Post-Consumer)

According to your request, continuous emission monitoring during vapor control projects of short duration presents significant operational and logistical difficulties. EPA agrees that it is impractical to require continuous H_2S monitoring of the fuel gas venting to these mobile FGCDs required under NSPS J and Ja. Therefore, in accordance with 40 CFR § 60.13(1) and after consideration of your written request, EPA approves as an alternative to the continuous monitoring requirements of 40 CFR §§ 60.105(a)(4) and 60.107a(a)(2), the following AMP for GEM's operations at refineries in Region 5:

1. GEM shall use either H_2S colorimetric tube testing or a portable H_2S meter to determine the concentration of H_2S in gases entering each GEM mobile combustion device (the Grab Sample). Each Grab Sample shall be taken at the inlet to each mobile combustion device.

2. For each discrete vapor control event, GEM shall perform a Grab Sample within 30 minutes of startup of each mobile combustion device (the Initial Grab Sample).

3. If the Initial Grab Sample indicates a H_2S concentration equal to or less than 162 ppmv, then the inlet gas stream is deemed to meet the H_2S limits of NSPS J and Ja and no further monitoring is required for that discrete vapor control event.

4. If the Initial Grab Sample indicates a H_2S concentration more than 162 ppmv, then for that discrete vapor control event, the inlet gas stream is deemed to have exceeded the 230 milligrams per dry standard cubic meter limit of 40 CFR § 60.104(a)(l) and the 162 ppmv limit of 40 CFR § 60.102a(g)(1)(ii). Alternatively, GEM may demonstrate compliance with the H_2S limits in 40 CFR §§ 60.104(a)(1) and 60.102a(g)(1)(11) by averaging three Grab Samples: (i) the Initial Grab Sample; (ii) a Grab Sample taken between 61 and 120 minutes after startup of the mobile combustion device; and (iii) a Grab Sample taken between 121 and 180 minutes after startup of the mobile combustion device. GEM can use this alternative method of demonstrating compliance only if it has three valid Grab Samples taken with the specified time periods.

5. GEM shall record the results of each Grab Sample and keep the records of all Grab Samples for at least five years.

6. Within five business days after each discrete vapor control event, GEM shall provide the owner or operator of the petroleum refinery where the discrete vapor control event is performed with the results of each Grab Sample, as well as a list of all dates and times when any Grab Sample indicates a H_2S concentration more than 162 ppmv. The purpose of this reporting requirement is to provide the owner or operator of the petroleum refinery with the data necessary for inclusion in its excess emissions and monitoring systems performance report or summary report form under 40 CFR § 60.7(c).

7. This AMP is limited to the requirements to install an instrument that continuously monitors and records the concentration of H_2S under NSPS J and Ja, and does not change the refinery owner or operator's obligations to meet all other applicable NSPS requirements.

This AMP for GEM's operations is effective immediately, but shall automatically expire on the effective date of any change that EPA makes to NSPS J or Ja that directly addresses the requirement to monitor the H_2S concentration in the fuel gases burned in mobile FGCDs used to degassing tanks, vessels, or pipes at petroleum refineries.

If you have any questions regarding this determination, please call Virginia Galinsky of my staff at (312) 353-2089.

Sincerely yours,

Sara Breneman

Sara Breneman
Chief
Air Enforcement and Compliance Assurance Branch

mostardi platt

March 27, 2017

RECEIVED
MAR 29 2017
AIR ENFORCEMENT BRANCH
U.S. EPA REGION 5

Air and Radiation Division
U.S. EPA Region 5
77 West Jackson Blvd. (AE-17J)
Chicago, IL 60604
Attn: Compliance Tracker

To Whom It May Concern:

Enclosed is one bound copy of the report for the VOC Capture and Destruction Efficiency Matter Test performed by Mostardi Platt for East Balt Commisionary, Inc. on the Bakery Lines #1 and #2 (with Ovens) Catalytic Oxidizer System and Proof Box #1 in Chicago, Illinois, on January 24 through 27 and February 16, 2017.

If you have any questions regarding this report, please let us know.

Sincerely,

MOSTARDI PLATT

Scott W. Banach

Scott W. Banach
Director, Project Engineering

Enclosure: One bound copy, M170406

888 Industrial Drive
Elmhurst, Illinois 60126
630-993-2100

VOC Capture and Destruction Efficiency Test Report

East Balt Commissary, LLC
Bakery Lines #1 and #2 (with Ovens)
Catalytic Oxidizer System and
Proof Box #1
Chicago, Illinois
Project No. M170406
January 24 through 27, and
February 16, 2017

mostardi platt

mostardi platt

VOC Capture and Destruction Efficiency Test Report

East Balt Commissary, LLC
Bakery Lines #1 and #2 (with Ovens) Catalytic Oxidizer System and Proof Box #1
Chicago, Illinois
January 24 through 27, and February 16, 2017

Report Submittal Date
March 27, 2017

© Copyright 2017
All rights reserved in
Mostardi Platt

Project No. M170406

888 Industrial Drive
Elmhurst, Illinois 60126
630-993-2100

TABLE OF CONTENTS

1.0 EXECUTIVE SUMMARY 1

2.0 PROCESS DESCRIPTION AND OPERATING RATES 2

3.0 TEST RESULTS 4

4.0 TEST METHODOLOGY 4
- Method 1 Traverse Point Determination 5
- Method 2 Volumetric Flowrate Determination 5
- Method 3 Oxygen (O_2)/Carbon Dioxide (CO_2) Determination 5
- Method 4 Moisture Determination 6
- Method 18 Ethane (C_2H_6) Determination 6
- Method 25A Volatile Organic Concentration Determination 6
- Method 204 Oven Enclosure Negative Pressure Determination 7

5.0 TEST RESULT SUMMARIES 8

6.0 CERTIFICATION 12

APPENDICES
- Appendix A – Plant Operating Data 14
- Appendix B - Test Section Diagrams 19
- Appendix C - Sample Train Diagrams 25
- Appendix D - Calculation Nomenclature and Formulas 30
- Appendix E- Reference Method Test Data (Computerized Sheets) 35
- Appendix F- Field Data Sheets 99
- Appendix G - Calibration Data and Response Time Data 141
- Appendix H - Calibration Gas Cylinder Data 183
- Appendix I – Oven Pressure Determination Data 203

 © Mostardi Platt

1.0 EXECUTIVE SUMMARY

MOSTARDI PLATT conducted a Volatile Organic Compound (VOC) capture and destruction efficiency test program on Bakery Lines #1 and #2 (with Ovens) Catalytic Oxidizer System and VOC emissions at the Proof Box #1 Recirculation Fan Duct at the Chicago, Illinois Facility of East Balt Commissary, LLC on January 24 through 27, and February 16, 2017. Testing was performed at the maximum production rate and at two other operating conditions (three sets of tests) for VOC Capture and Destruction Efficiency, and at one condition for the Proof Box VOC emissions. All testing was performed as described in the *Code of Federal Regulations*, Title 40, Part 60, Appendix A (40CFR60), Methods 1, 2, 3, 4, and 25A, ASTM E337-02, 40CFR and Part 51, Appendix M, Methods 204; and the latest revisions thereof. Where applicable, the *Quality Assurance Handbook for Air Pollution Measurement Systems*, Volume III, Stationary Source Specific Methods, USEPA 600/4-77-027b was used to determine the precise procedures.

The source, emission points, pollutants tested, and test methods are summarized below.

TEST PARAMETERS			
Source	**Emission Points**	**Pollutant Tested**	**Method/Regulation Citation**
Catalytic Oxidizer System	Catalytic Oxidizer Inlet Duct	VOC	USEPA Methods 1, 2, 3, 4, 18 (Ethane only at Low Inlet Loading condition), and 25A, 40CFR60, Appendix A,
	Catalytic Oxidizer Outlet Stack	VOC	USEPA Methods 1, 2, 3, 4, 18 (Ethane only at Low Inlet Loading condition), and 25A, 40CFR60, Appendix A
	Oven Door Natural Draft Openings (NDOs)	VOC	"Negative Pressure Enclosure Qualitative Test Method for Bakery Ovens" adapted from USEPA Method 204, 40CFR51, Appendix M
	Proof Box #1 Recirculation Fan Duct	VOC	USEPA Methods 1, 2, 3, and 25A, 40CFR60, Appendix A and ASTM E337-02. The volumetric flow at the product inlet opening and product outlet opening was determined using a vane anemometer during each VOC emission test.

The purpose of the test program was to determine the VOC Capture and Destruction Efficiency of the Catalytic Oxidizer System during the required operating conditions and VOC emissions at the Proof Box #1 Recirculation Fan Duct. Operating data as provided by East Balt Commissary, LLC is included in Appendix A. Pursuant to Paragraph 25 of Consent Decree 16C08301, an Operating Parameter Limit (OPL) report will be submitted within sixty (60) days of completion of performance testing. The proposed OPL's are not included in this report.

The identifications of the individuals associated with the test program are summarized below.

Project Contact Information		
Location	**Address**	**Contact**
Facility Representative	East Balt Commissary, LLC 1801 West 31st Place Chicago, Illinois 60608	Mr. Derek St. John Maintenance Manager/Chief Engineer (773) 376-4444 (phone) dstjohn@eastbalt.com
Testing Company Representative	Mostardi Platt 888 Industrial Drive Elmhurst, Illinois 60126	Mr. Jeffrey Crivlare Senior Project Manager (630) 993-2100 (phone) jcrivlare@mp-mail.com

© Mostardi Platt

The test crew consisted of Messrs. T. Mei, J. Robertson, D. Kossack, E. Charatz, L. Mazza, J. Kukla, J. Aksamitowski, J. Howe, K. Johnson, S. Dyra, and J. Crivlare of Mostardi Platt.

2.0 PROCESS DESCRIPTION AND OPERATING RATES

East Balt Commissary, LLC produces yeast-leavened products such as breads, buns, and other miscellaneous bakery products. Significant emission units at the source include two (2) bun lines (Bakery Line #1 and Bakery Line #2), each with an oven, identified as emission unit 01 and 02, respectively, and one (1) griddle with an oven identified as emission unit 03. Additional insignificant activities, including, but not limited to, natural gas-fired boilers, heaters, storage silos, and a flour unloading system are also included in the current CAAPP permit. The East Balt Bakery is considered a major source of volatile organic material (VOM) emissions with a source-wide VOM emission limit of 132.1 tons per year (tpy). As such, the existing facility operates under the Clean Air Act Permit Program (CAAPP) Permit No. 96030148, which was most recently issued by the Illinois Environmental Protection Agency (IEPA) on December 29, 2016. The CAAPP permit establishes emissions based on natural gas consumption and the amount of baked bread produced. Emissions from Bakery Line #1 (with oven) and Bakery Line #2 (with oven) are controlled by the recently installed catalytic oxidizer. Emissions from the griddle (with oven) are uncontrolled. Note that the griddle was not included in the testing and therefore is not addressed in this report.

The bakery lines are highly automated, where all the mixing, blending, working and dividing are interconnected by a conveyor serving the process. Bread and bread products consist of four main ingredients: flour, water, yeast and salt. Other physical properties of the product are obtained by adding ingredients such as sweeteners, shortening, enzymes, and preservatives. Flour, the main ingredient, is stored in silos and is stored in silos and is conveyed through pipes to batch weighers, after which water, yeast, and other ingredients are added in a mixer.

After mixing, the dough is placed in large tubs and kept in a room where the temperature and humidity are closely controlled to allow the fermentation process to occur. During the process, the yeast reproduce under aerobic conditions forming carbon dioxide gas (49 percent), an almost equivalent amount of liquid ethanol (47 percent) and a small amount (about 4 percent) of other various compounds. With some recipes, additional ingredients including yeast and flour are added after fermentation. In these cases, the initial mix is called a 'sponge,' with the extra ingredients referred to as a 'spike' and the final mixed product called 'dough.' No spike of yeast is used in any of the recipes tested in this report.

After fermentation, the dough is placed in a mixer where the minor ingredients are added. The dough is then conveyed through a divider, rounded, dusted with flour, and placed into pans where they are conveyed into a proof box. The proof box is a well-insulated chamber, free of drafts where the time, temperature, and humidity are controlled. These conditions allow the dough to rise again by accelerating the yeast activity. A minor amount of the ethanol is liberated in the proof boxes: however, the exhausts from these chambers are minimized to preserve temperature and humidity conditions.

East Balt Commissary, LLC indicates that the amount of ethanol released per pound of dough is fixed, regardless of the product. Accordingly, ethanol emissions from the proof box will be measured at the maximum production rate condition only, in order to establish a site-specific emission factor in terms of lbs ethanol emitter per lbs product. It should be noted that the proof box does not have an exhaust that meets Method 1 minimum requirements and food safety

 © Mostardi Platt

considerations preclude the construction of any temporary means of capturing the exhaust with equipment that would meet Method 1 minimums. Accordingly, it is proposed to measure ethanol concentrations at a point in the recirculation air loop of the proof box and to estimate exhaust gas volumetric flow rate by using measuring gas velocities at several points at the entrance to and/or exit from the proof box.

After proofing, the pans are conveyed into baking ovens. The ovens combust natural gas exclusively and have firing rates of 5.625 and 11.2 million British thermal units per hour (MMBtu/hr) for the Bakery Line #1 Oven and Bakery Line #2 Oven, respectively. No adjustments were made to either Bakery Line #1 Oven or Bakery Line #2 Oven since the effective date of the Consent Decree. During the baking process, the yeast suffers a thermal death, and no further gases are created. Approximately 50 percent of the liquid ethanol produced during fermentation is vaporized during the process. The baking process is complete when the internal temperature of the loaf reaches the boiling point of ethanol. After baking, the loaf is removed from the pan and is allowed to cool prior to packaging.

Testing was conducted under three production scenarios.[1]

High Loading: 2/16/17
A maximum loading of product through both Line 1 and Line 2 oven.

Oven	*Baker's Yeast Percent (%)*	*Wet Production Rate (tons/hour)*	*Dry Production Rate (tons/hour)*	*Waste (tons/hour)*	*Production Rate to Vendor (tons/hour)*
Line 1	4.974	3.61	3.24	0.13	3.12
Line 2	4.610	2.98	2.65	0.09	2.56
Total	-	6.59	5.89	0.22	5.68

Mid Loading: 1/26/17
Most likely operation conditions for Line 1 and Line 2.

Oven	*Baker's Yeast Percent (%)*	*Wet Production Rate (tons/hour)*	*Dry Production Rate (tons/hour)*	*Waste (tons/hour)*	*Production Rate to Vendor (tons/hour)*
Line 1	4.974	3.29	2.90	0.12	2.78
Line 2	6.448	2.23	1.98	0.06	1.92
Total	-	5.51	4.88	0.18	4.70

Low Loading: 1/27/17
Lowest loading through the facility's slowest line.

Oven	*Baker's Yeast Percent (%)*	*Wet Production Rate (tons/hour)*	*Dry Production Rate (tons/hour)*	*Waste (tons/hour)*	*Production Rate to Vendor (tons/hour)*
Line 1	4.974	3.29	2.90	0.20	2.69
Total	-	3.29	2.90	0.20	2.69

All production was recorded on the plant data acquisition system.

[1] Raw production data signed by East Balt required by Consent Decree 16C08301 Paragraph 24(d)(v) will be submitted at a later date.

© Mostardi Platt

3.0 TEST RESULTS

The negative pressure evaluation of the Baking Ovens associated with the Catalytic Oxidizer System determined that each Natural Draft Opening (NDO) meets the criteria of the "Negative Pressure Enclosure Qualitative Test Method for Bakery Ovens", and consequently the oven capture efficiency is 100%.

CATALYTIC OXIDIZER SYSTEM TEST RESULTS						
Operating Condition	**Test Parameter**	**Catalytic Oxidizer Inlet**	**Catalytic Oxidizer Outlet**	**Capture Efficiency %**	**Catalytic Oxidizer Destruction Efficiency %**	**Overall Control Efficiency %**
High Inlet Loading	VOC as CH_3CH_2OH	36.62 lb/hr	0.54 lb/hr	100 %	99 %	99 %
Mid Inlet Loading		42.37 lb/hr	0.19 lb/hr	100 %	100 %	100 %
Low Inlet Loading		25.70 lb/hr	0.28 lb/hr	100 %	99 %	99 %

A response factor of 3.6 was determined to convert non-methane hydrocarbons (NMHC) ppmv as propane (C_3H_8) to NMHC ppmv as ethanol (CH_3CH_2OH) for the TECO 55i analyzer used at the Catalytic Oxidizer Inlet Duct.

A response factor of 3.58 was determined to convert non-methane hydrocarbons (NMHC) ppmv as propane (C_3H_8) to NMHC ppmv as ethanol (CH_3CH_2OH) for the TECO 55i analyzer used at the Catalytic Oxidizer Outlet Duct under the high inlet loading condition.

Emission results for the Proof Box #1 location is summarized below:[2]

Operating Condition	**Test Parameter**	**Proof Box Outlet**
High Inlet Loading	VOC as C_3CH_2OH	0.81 lb/hr

A response factor of 2.213 was determined to convert total hydrocarbons (THC) ppmv as C_3H_8 to NMHC ppmv as CH_3CH_2OH for the VIG 20/2 analyzer used at Proof Box #1.

4.0 TEST METHODOLOGY

Emission testing was conducted following the methods specified in 40 CFR, Part 60, Appendix A; 40CFR, Part 51, Appendix M; and the latest revisions thereof. Schematics of the test section diagrams are included in Appendix B. Schematics of the sampling trains used are included in Appendix C. Copies of the nomenclature and example calculations are found in Appendix D. Copies of reference method data for each test run are included in Appendix E and field data sheets are found in Appendix F.

The following methodologies were used during the test program:

[2] No deviations were made from the specified test methods, including sampling procedures.

Method 1 Traverse Point Determination

Test measurement points were selected in accordance with Method 1. The characteristics of the measurement locations are summarized below.

CATALYTIC OXIDIZER TEST POINT INFORMATION						
Location	**Diameter (Feet)**	**Area (Square Feet)**	**Upstream Diameters**	**Downstream Diameters**	**Test Parameter**	**Number of Sampling Points**
Catalytic Oxidizer Inlet	1.833	2.64	>0.5	>2.0	Volumetric Flow	16
Catalytic Oxidizer Outlet	1.875	2.76	>2	4.8	Volumetric Flow	16

The absence of cyclonic flow was verified with a null point pitot traverse at each location prior to testing. The null point pitot traverse data is found in Appendix F.

Sampling locations for the Proof Box #1 are listed below.

Proof Box #1 Test Locations				
Location	**Dimensions**	**Area**	**Test Parameter**	**Number of Observation Points in Opening**
Proof Box Inlet Opening	43 Inches Wide x 40 Inches High	11.944 Square Feet	Volumetric flow	4
Proof Box Outlet Opening	(36 Inches Wide x 15 Inches High) + (49Inches Wide x 12 Inches High)	7.833 Square Feet	Volumetric flow	4

The volumetric flow at the product inlet opening and product outlet opening were determined using a vane anemometer or a hot wire anemometer at the beginning and end of each VOC emission.

Method 2 Volumetric Flowrate Determination

Gas velocity was measured following Method 2, for purposes of calculating stack gas volumetric flow rate at the Catalytic Oxidizer inlet and outlet ducts. An S-type pitot tube, differential pressure gauge, thermocouple and temperature readout were used to determine gas velocity at each sample point. All of the equipment used was calibrated in accordance with the specifications of the Method. Calibration data are presented in Appendix G.

Method 3 Oxygen (O_2)/Carbon Dioxide (CO_2) Determination

Flue gas molecular weight was determined in accordance with Method 3. Fyrite analyzers were used to determine flue gas oxygen and carbon dioxide content and, by difference, nitrogen content. All of the equipment used was calibrated in accordance with the specifications of the Method.

Method 4 Moisture Determination

Stack gas moisture content was determined using a Method 4 sampling train at the Catalytic Oxidizer inlet and outlet ducts. In this technique, flue gas is drawn through a probe after which moisture is condensed through a series of four impingers. The first two impingers were charged with approximately 100 mls of deionized, distilled water. Impinger three was left empty and impinger four was charged with clean, dried silica gel. The water volumes of the impinger train were measured and the silica gel was weighed before and after each test run to determine the mass of moisture condensed.

During testing, the sample train was operated in the manner generally specified in USEPA Method 4. All of the data specified in Method 4 (gas volume, delta H, impinger outlet well temperature, etc.) was recorded on field data sheets.

All of the equipment used was calibrated in accordance with the specifications of the Method. Calibration data are presented in Appendix H.

Method 18 Ethane (C_2H_6) Determination

The Method 18, 40CFR60, sampling and measurement system meets the requirements for stack sampling of gaseous organic compounds set forth by the United States Environmental Protection Agency (USEPA). In particular, it meets the requirements of USEPA Reference Method 18, "Determination of Gaseous Organic Compound Emissions by Gas Chromatography," 40CFR60, Appendix A. This method applies to the analysis of approximately 90% of the total gaseous organics emitted from an industrial source. The major organic components of a gas mixture are separated by gas chromatography, and methane is quantified by a flame ionization detector.

The gas samples during the Low Inlet Loading condition were analyzed by Gas Technology Institute of Des Plaines, Illinois, and the analyses data is found in Appendix A.

Method 25A Volatile Organic Concentration Determination

The Method 25A sampling and measurement system meets the requirements for stack sampling of VOCs set forth by the United States Environmental Protection Agency (USEPA). In particular, it meets the requirements of USEPA Reference Method 25A, "Determination of Total Gaseous Organic Concentration Using a Flame Ionization Analyzer," 40CFR60, Appendix A. This method applies to the measurement of total gaseous organic concentration of hydrocarbons. With this method, gas samples are extracted from the sample locations through heated Teflon sample lines to the analyzers.

The flame ionization detectors (FIDs) used during this program, were VIG High-Temperature Total Hydrocarbon Analyzers and TECO 55i analyzers. They are highly sensitive FIDs that provide a direct reading of total organic vapor concentrations with linear ranges of 0-10, 100, 1000, and 10,000 ppm by volume. The instruments were calibrated using ultra-zero air and propane in air EPA Protocol standards. The calibrations were performed before and after sampling with calibration checks performed between each test run. Sampling was conducted continuously for three one-hour periods for VOC destruction efficiency tests. Sample times and locations are logged simultaneously on data loggers.

Calculations are performed by computer or by hand. An explanation of the nomenclature and calculations along with the complete test results is included in Appendix D. The calibration data

are found in Appendix G and copies of the calibration gas cylinder certifications are found in Appendix H.

Method 204 Oven Enclosure Negative Pressure Determination

The system was evaluated using a visible plume placed at a distance of 12 inches +/- 2 inches at five different sites for each Natural Draft Opening (NDO) of each oven per "Negative Pressure Enclosure Qualitative Test Method for Bakery Ovens" adapted from USEPA Method 204, 40CFR51, Appendix M.

For each site, two non-consecutive plumes were generated for a one minute period, less than one hour apart. The carbon dioxide plume were created by immersing dry ice in hot water, in lieu of streamers, smoke tubes, or tracer gases as specified by USEPA Method 204.

For each site, the date and time, and the direction of the plume (inward/outward) were recorded and are found in Appendix I.

© Mostardi Platt

5.0 TEST RESULT SUMMARIES

East Balt Commissary, LLC Chicago Illinois Catalytic Oxidizer (High Inlet Loading) Gaseous Summary							
Test No.	Date	Start Time	End Time	NMHC ppm Inlet as C_3H_8 (wet)	NMHC ppm as CH_3CH_2OH Inlet (wet)	NMHC ppm Outlet as C_3H_8 (wet)	NMHC ppm as CH_3CH_2OH Outlet (wet)
1	02/16/17	10:40	11:39	411.2	1,480.3	4.9	17.5
2	02/16/17	12:20	13:19	437.8	1,576.1	3.7	13.2
3	02/16/17	13:56	15:10	470.3	1,693.1	4.4	15.8
Average				439.8	1,583.2	4.3	15.5

Emission Rate Summary

Test No.	Date	Start Time	End Time	Inlet Flowrate, SCFM	Inlet VOC as CH_3CH_2OH lb/hr	Outlet Flowrate, SCFM	Outlet VOC as CH_3CH_2OH lb/hr	Destruction Efficiency, %
1	02/16/17	10:40	11:39	3,361	35.73	4,887	0.62	98
2	02/16/17	12:20	13:19	3,136	35.49	4,851	0.46	99
3	02/16/17	13:56	15:10	3,178	38.64	4,715	0.53	99
Average				3,225	36.62	4,818	0.54	99

A response factor of 3.6 was determined to convert NMHC ppmv as C_3H_8 to NMHC ppmv as CH_3CH_2OH for the TECO 55i analyzer used at the Catalytic Oxidizer Inlet

A response factor of 3.58 was determined to convert NMHC ppmv as C_3H_8 to NMHC ppmv as CH_3CH_2OH for the TECO 55i analyzer used at the Catalytic Oxidizer Outlet

Testing was conducted under normal daily operating conditions.

Note that no errors were encountered during testing.

© Mostardi Platt

East Balt Commissary, LLC Chicago, Illinois Catalytic Oxidizer (Mid Inlet Loading) Gaseous Summary										
Test No.	Date	Start Time	End Time	NMHC ppm Inlet as C_3H_8 (wet)	NMHC ppm as CH_3CH_2OH Inlet (wet)	Inlet Ethane Analyses ppmv	VOC ppm as CH_3CH_2OH Inlet (wet)	NMHC ppm Outlet as CH_3CH_2OH (wet)	Outlet Ethane Analyses ppmv	VOC ppm as CH_3CH_2OH Outlet (wet)
1	01/26/17	10:10	11:09	290.1	1,044.4	4.2	1,040.2	16.5	4.6	11.9
2	01/26/17	12:15	13:14	282.4	1,016.6	0.5	1,016.1	8.1	2.2	5.9
3	01/26/17	13:55	15:09	282.6	1,017.4	1.9	1,015.5	10.1	4.3	5.8
Average				285.0	1,026.1	2.2	1,023.9	11.6	3.7	7.9

Emission Rate Summary								
Test No.	Date	Start Time	End Time	Inlet Flowrate, SCFM	Inlet VOC as CH_3CH_2OH lb/hr	Outlet Flowrate, SCFM	Outlet VOC as CH_3CH_2OH lb/hr	Destruction Efficiency, %
1	01/26/17	10:10	11:09	3,528	26.35	4,768	0.41	98
2	01/26/17	12:15	13:14	3,477	25.37	5,149	0.22	99
3	01/26/17	13:55	15:09	3,481	25.38	5,237	0.22	99
Average				3,495	25.70	5,051	0.28	99

A response factor of 3.6 was determined to convert NMHC ppmv as C_3H_8 to NMHC ppmv as CH_3CH_2OH for the TECO 55i analyzer used at the Catalytic Oxidizer Inlet

Testing was conducted under normal daily operating conditions.

Note that no errors were encountered during testing.

© Mostardi Platt

East Balt Commissary, LLC Chicago, Illinois Catalytic Oxidizer (Low Inlet Loading) Gaseous Summary							
Test No.	Date	Start Time	End Time	NMHC ppm Inlet as C_3H_8 (wet)	VOC ppm as CH_3CH_2OH Inlet (wet)	NMHC ppm Outlet as CH_3CH_2OH (wet)	VOC ppm as CH_3CH_2OH Outlet (wet)
1	01/27/17	06:50	07:49	522.1	1,879.6	4.1	4.1
2	01/27/17	08:40	09:39	440.8	1,586.9	4.4	4.4
3	01/27/17	10:35	11:34	454.7	1,636.9	7.6	7.6
Average				472.5	1,701.1	5.4	5.4

Emission Rate Summary								
Test No.	Date	Start Time	End Time	Inlet Flowrate, SCFM	Inlet VOC as CH_3CH_2OH lb/hr	Outlet Flowrate, SCFM	Outlet VOC as CH_3CH_2OH lb/hr	Destruction Efficiency, %
1	01/27/17	06:50	07:49	3,446	46.51	4,766	0.14	100
2	01/27/17	08:40	09:39	3,487	39.74	4,831	0.15	100
3	01/27/17	10:35	11:34	3,475	40.85	4,804	0.26	99
Average				3,469	42.37	4,800	0.19	100

A response factor of 3.6 was determined to convert NMHC ppmv as C_3H_8 to NMHC ppmv as CH_3CH_2OH for the TECO 55i analyzer used at the Catalytic Oxidizer Inlet

Testing was conducted under normal daily operating conditions.

Note that no errors were encountered during testing.

© Mostardi Platt

East Balt Commissary, LLC Chicago, Illinois Proof Box #1 Recycled Air Duct Gaseous Summary							
Test No.	Date	Start Time	End Time	THC ppm Outlet as C_3H_8 (wet)	VOC ppm as CH3CH2OH Outlet (wet)	Outlet Flowrate, SCFM	Outlet VOC as CH3CH2OH lb/hr
1	01/24/17	08:29	09:28	236.6	523.6	144.6	0.54
2	01/24/17	10:39	11:38	302.3	669.0	142.9	0.69
3	01/24/17	12:17	13:16	526.8	1,165.8	142.9	1.20
Average				355.2	786.1	143.5	0.81

A response factor of 2.213 was determined to convert THC ppmv as C_3H_8 to VOC ppmv as CH_3CH_2OH for the VIG 20/2 analyzer used at Proof Box #1

© Mostardi Platt

6.0 CERTIFICATION

MOSTARDI PLATT is pleased to have been of service to East Balt Commissary, LLC. If you have any questions regarding this test report, please to not hesitate to contact us at (630) 993-2100.

CERTIFICATION

As project manager, I hereby certify that this test report represents a true and accurate summary of emissions test results and the methodologies employed to obtain those results, and the test program was performed in accordance with the methods specified in this test report.

MOSTARDI PLATT

Jeffrey M. Crivlare

_____ Program Manager

Jeffrey M. Crivlare

Scott W. Banach

_____ Quality Assurance

Scott W. Banach

© Mostardi Platt

APPENDICES

© Mostardi Platt

Appendix A – Plant Operating Data

© Mostardi Platt

Energy to Lead

gti testing laboratories

Analytical Report

Sample COC #: 172052
January 30, 2017

Prepared for:

Jenna Ghanma
Phone: (630) 993-2685
Fax: (630) 993-9017
Email: mplaboratory@mp-mail.com

Mostardi Platt
888 Industrial Drive
Elmhurst, IL 60126

PO #: Project M170406

Received Date: January 27, 2017

Disclaimer:

Neither GTI nor any person acting on behalf of GTI assumes any liability with respect to the use of, or for damages resulting from the use of, any information presented in this report.

The results within this report relate only to the items tested.

Submitted by: Karen Crippen, (847) 768-0604
Environmental and Chemical Research Services

Technical Contact: _____
Russell Bora, (847) 768-0693

gti. testing laboratories

Trace Methane, Ethane by GC/FID

Client Name: Mostardi Platt

Date Analyzed: 27-Jan-17

Sample #	Description	Methane ppmv	Ethane ppmv
172052-001	Inlet #1 01/26/17	83.0	4.2
172052-002	Outlet #1 01/26/17	92.9	4.6
172052-003	Inlet #2 01/26/17	10.7	0.5
172052-004	Outlet #2 01/26/17	46.1	2.2
172052-005	Inlet #3 01/26/17	37.5	1.9
172052-006	Outlet #3 01/26/17	84.0	4.3

Comments

Detection Limit: 0.2 ppmv

Analyst: KD

Gas Technology Institute | 1700 S. Mount Prospect Rd. | Des Plaines, IL 60018 | T: 847 768 0500 | F: 847 768 0970 | www.gastechnology.org/gtilabs

© Mostardi Platt

gti testing laboratories

Sample COC Report

COC #: 172052
Customer: Mostardi Platt
Contact: Jenna Ghanma

Todays' Date: 01/27/2017
Date Received: 01/27/2017
Date Due: 01/30/2017

Lab #	Received	Sample ID	Cyl #	Note
172052-001	01/27/17	Inlet #1 01/26/17	tedlar bag	
	Evac			
	Trace Methane & Ethane			
172052-002	01/27/17	Outlet #1 01/26/17	tedlar bag	
	Evac			
	Trace Methane & Ethane			
172052-003	01/27/17	Inlet #2 01/26/17	tedlar bag	
	Evac			
	Trace Methane & Ethane			
172052-004	01/27/17	Outlet #2 01/26/17	tedlar bag	
	Evac			
	Trace Methane & Ethane			
172052-005	01/27/17	Inlet #3 01/26/17	tedlar bag	
	Evac			
	Trace Methane & Ethane			
172052-006	01/27/17	Outlet #3 01/26/17	tedlar bag	
	Evac			
	Trace Methane & Ethane			

© Mostardi Platt

mostardi platt

Chain-of-Custody Form	
Project Number: M170406	Date Results Required: 1-day TAT
Client: East Balt Commissary	TAT Required: 1/27/17
Plant/Test Location: Chicago, IL Catalytic Oxidizer	Project Supervisor: JMC
PO#:	

Sample Number	Sample Date	Sample Point Identification	# of Conts	Sub Lab	Analysis Required	Volume, mls
001	1/26/17	Test 1 Inlet bag	1	GTI	Methane/ethane	
002	1/26/17	Test 2 Inlet bag	1	GTI	Methane/ethane	
003	1/26/17	Test 3 Inlet bag	1	GTI	Methane/ethane	
004	1/26/17	Test 1 Outlet bag	1	GTI	Methane/ethane	
005	1/26/17	Test 2 Outlet bag	1	GTI	Methane/ethane	
006	1/26/17	Test 3 Outlet bag	1	GTI	Methane/ethane	
007						
008						
009						
010						
011						
012						
013						
014						
015						
016						
017						

Delivered to Lab by: Date/Time:	Received by: Date/Time:	Processed by: Date/Time:
[signature] 1/26/17	[signature] 08:28 1/27/17	

Laboratory Notes: As discussed with Russell Bora yesterday, we will need prelim results by the end of the day.

Page 1 of 1

Page 4 of 4

© Mostardi Platt

Appendix B - Test Section Diagrams

© Mostardi Platt

EQUAL AREA TRAVERSE FOR ROUND DUCTS

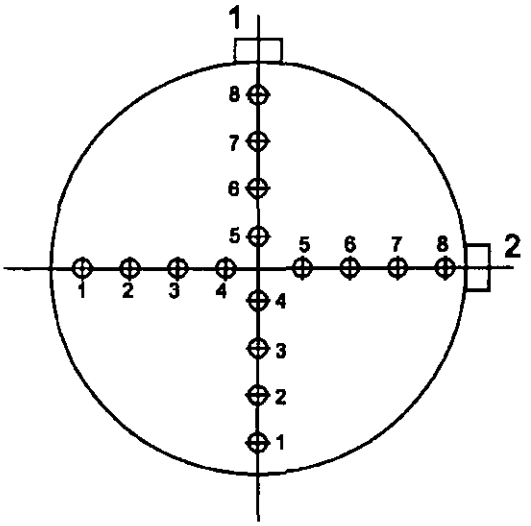

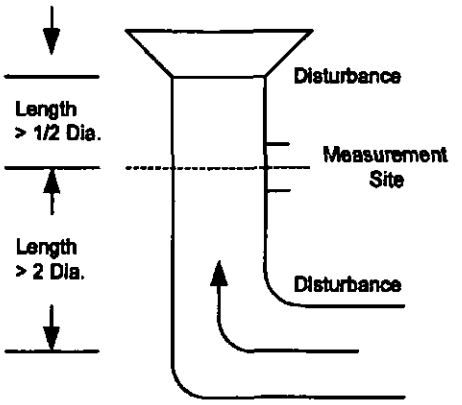

Job:	East Balt Commissary, LLC Chicago, IL
Date:	January 26 and 27, 2017, and February 16, 2017
Test Location:	Catalytic Oxidizer Inlet Duct
Stack Diameter (Feet):	1.833 Feet
Stack Area (Square Feet):	2.64 Sq. Ft.
No. Sample Points Across Diameter:	8
No. of Ports:	2
Port Length (Inches):	2 Inches

Distance from inside wall at port to traverse point:

1. 2.71 inches (96.8 % of diameter)
2. 4.31 inches (89.5 % of diameter)
3. 6.27 inches (80.6 % of diameter)
4. 9.11 inches (67.7 % of diameter)
5. 16.89 inches (32.3 % of diameter)
6. 19.73 inches (19.4 % of diameter)
7. 21.69 inches (10.5 % of diameter)
8. 23.29 inches (3.2 % of diameter)

© Mostardi Platt

EQUAL AREA TRAVERSE FOR ROUND DUCTS

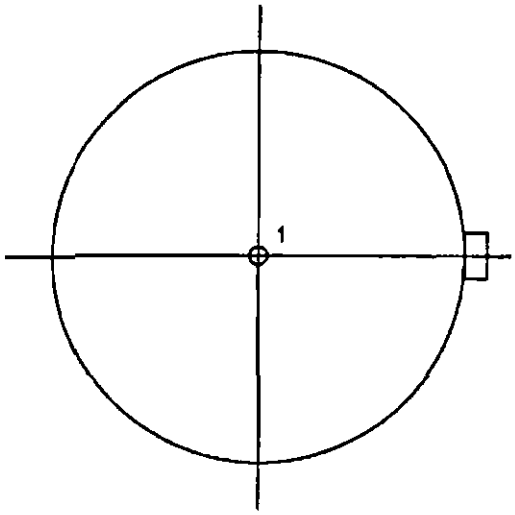

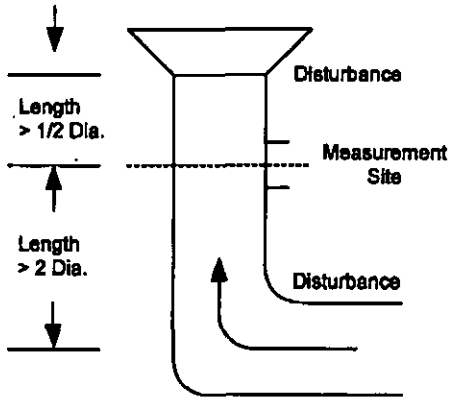

Job:	East Balt Commissary, LLC Chicago, IL
Date:	January 26 and 27, 2017, and February 16, 2017
Test Location:	Catalytic Oxidizer Inlet Duct
Duct Diameter:	1.833 Feet
Duct Area:	2.64 Sq. Ft
No. Points Across Diameter:	1
No. of Ports:	1
Port Length:	2 Inches

© Mostardi Platt

EQUAL AREA TRAVERSE FOR ROUND DUCTS

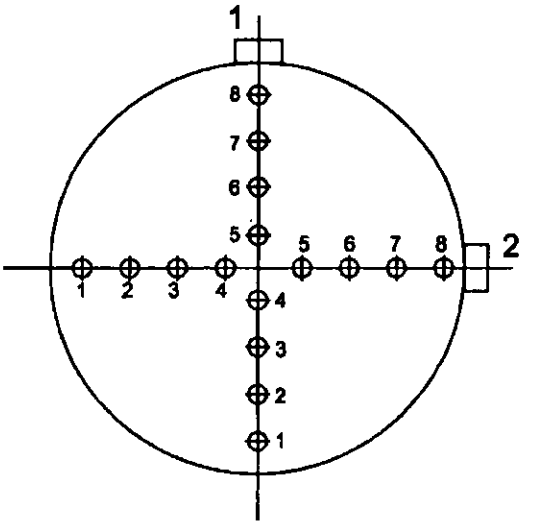

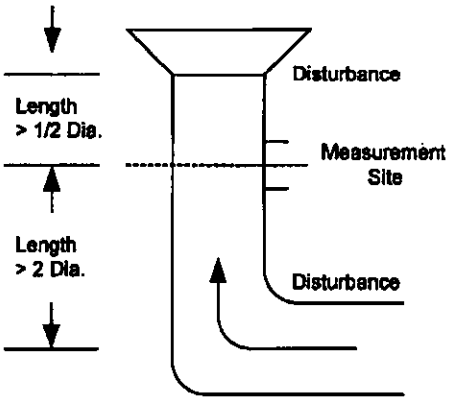

Job:	East Balt Commissary, LLC Chicago, IL
Date:	January 26 and 27, 2017, and February 16, 2017
Test Location:	Catalytic Oxidizer Stack
Stack Diameter (Feet):	1.87 Feet
Stack Area (Square Feet):	2.75 Sq. Ft.
No. Sample Points Across Diameter:	8
No. of Ports:	2
Port Length (Inches):	2 Inches

Distance from inside wall at port to traverse point:

1. 5.71 inches (96.8 % of diameter)
2. 7.35 inches (89.5 % of diameter)
3. 9.35 inches (80.6 % of diameter)
4. 12.24 inches (67.7 % of diameter)
5. 20.19 inches (32.3 % of diameter)
6. 23.09 inches (19.4 % of diameter)
7. 25.08 inches (10.5 % of diameter)
8. 26.72 inches (3.2 % of diameter)

© Mostardi Platt

EQUAL AREA TRAVERSE FOR ROUND DUCTS

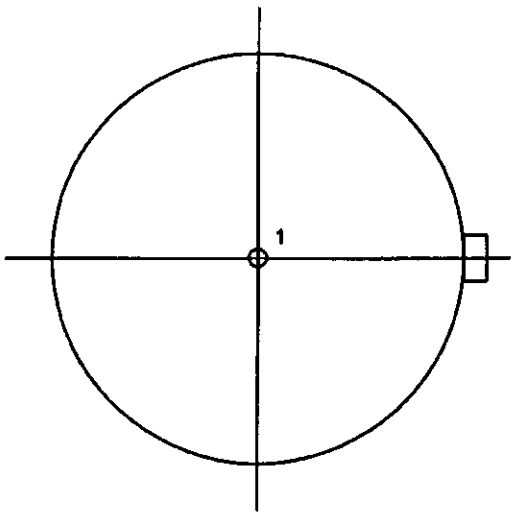

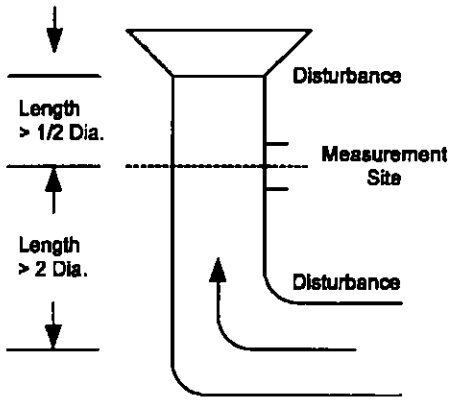

Job:	East Balt Commissary, LLC Chicago, IL
Date:	January 26 and 27, 2017, and February 16, 2017
Test Location:	Catalytic Oxidizer Stack
Duct Diameter:	1.87 Feet
Duct Area:	2.75 Sq. Ft
No. Points Across Diameter:	1
No. of Ports:	1
Port Length:	2 Inches

© Mostardi Platt

GASEOUS TRAVERSE FOR RECTANGULAR DUCTS

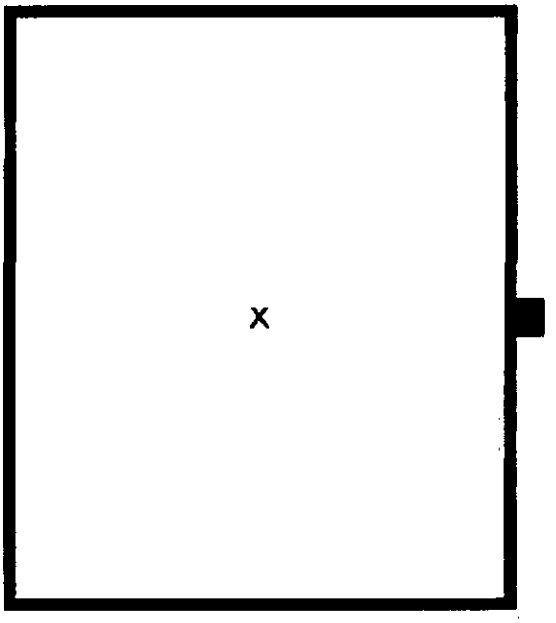

Job: East Balt Commissary, LLC
Chicago, IL

Date:	January 24, 2017	Stack Width:	28 Inches
Test Location:	Proof Box #1 Recycled Air Duct	Stack Length:	28 Inches
Tests Port:	1	Stack Area:	5.444 Square Feet
Tests Points per Port:	1		

© Mostardi Platt

Appendix C - Sample Train Diagrams

© Mostardi Platt

USEPA Method 2- Type S Pitot Tube Manometer Assembly

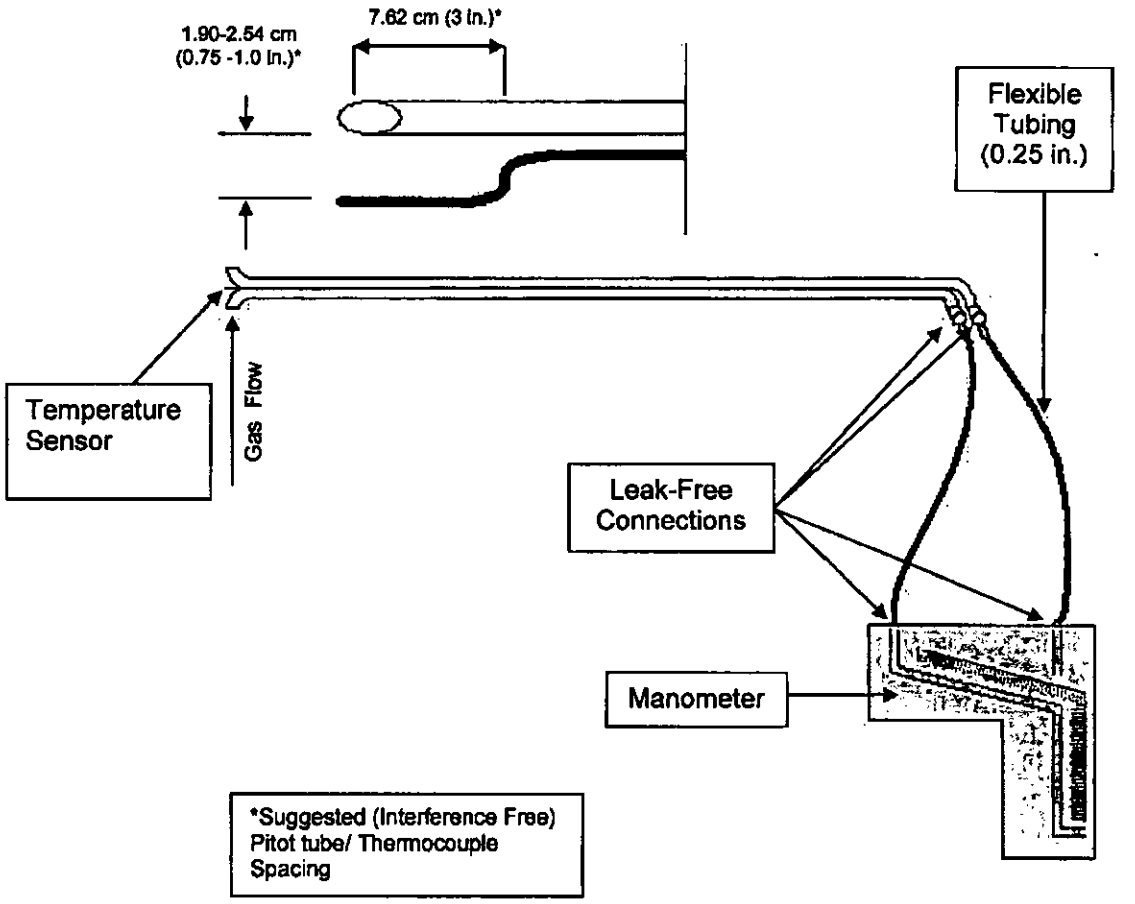

USEPA Method 3 - Integrated Oxygen/Carbon Dioxide Sample Train Diagram Utilizing Fyrite Gas Analyzer

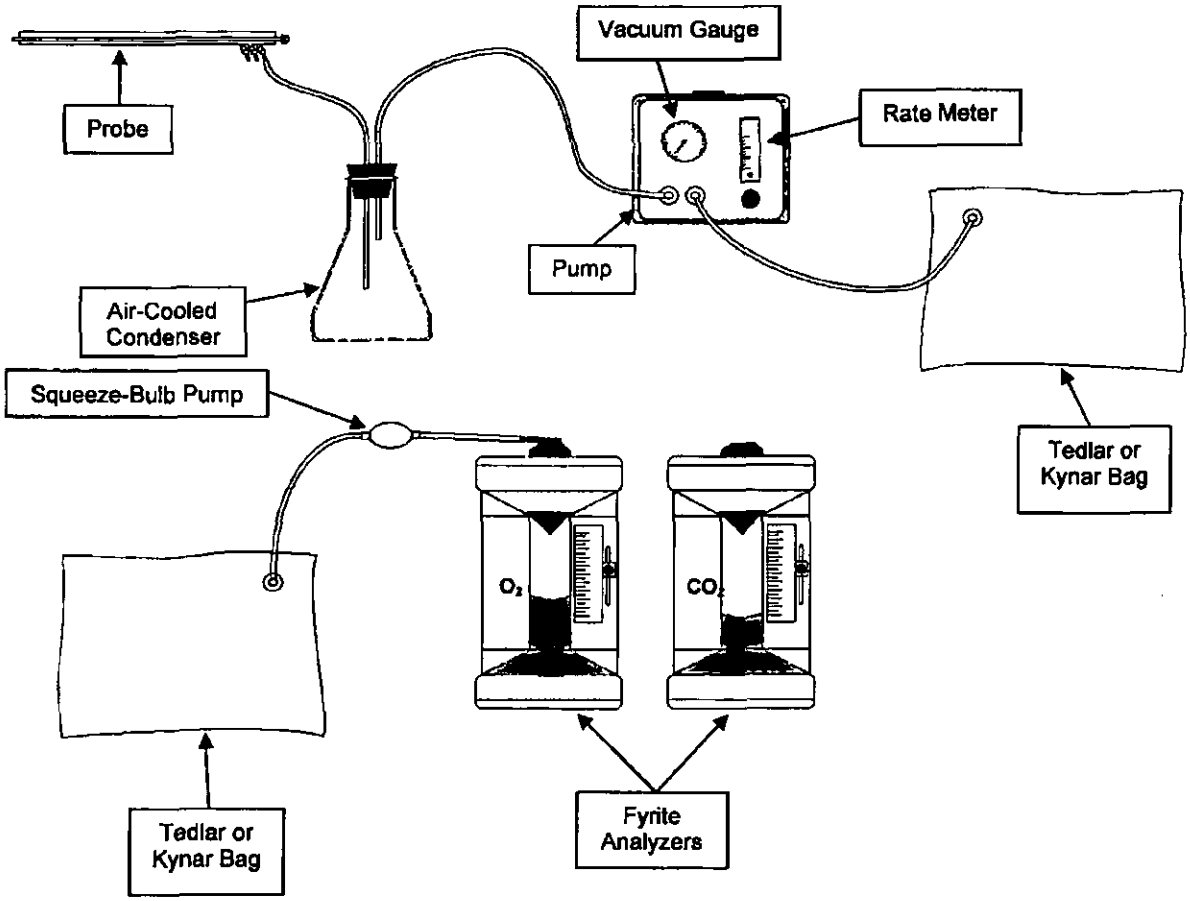

USEPA Method 4- Moisture Content Sample Train Diagram

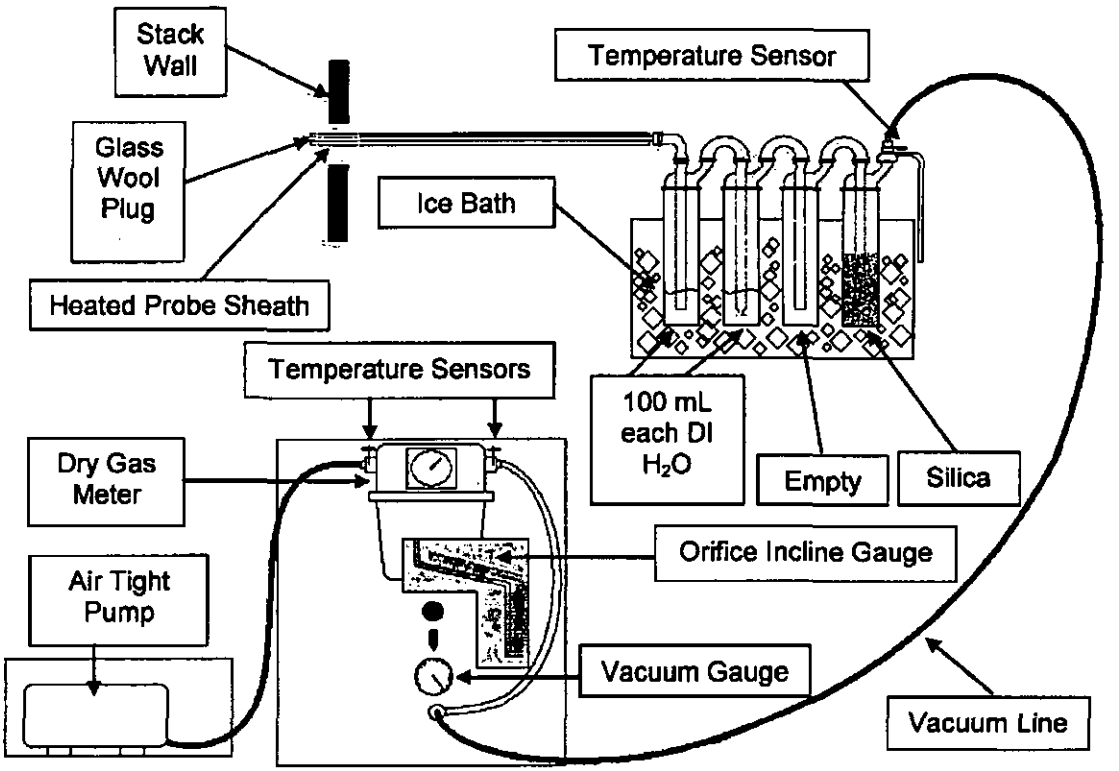

USEPA Method 25A – Total Gaseous Organic Compound Sample Train

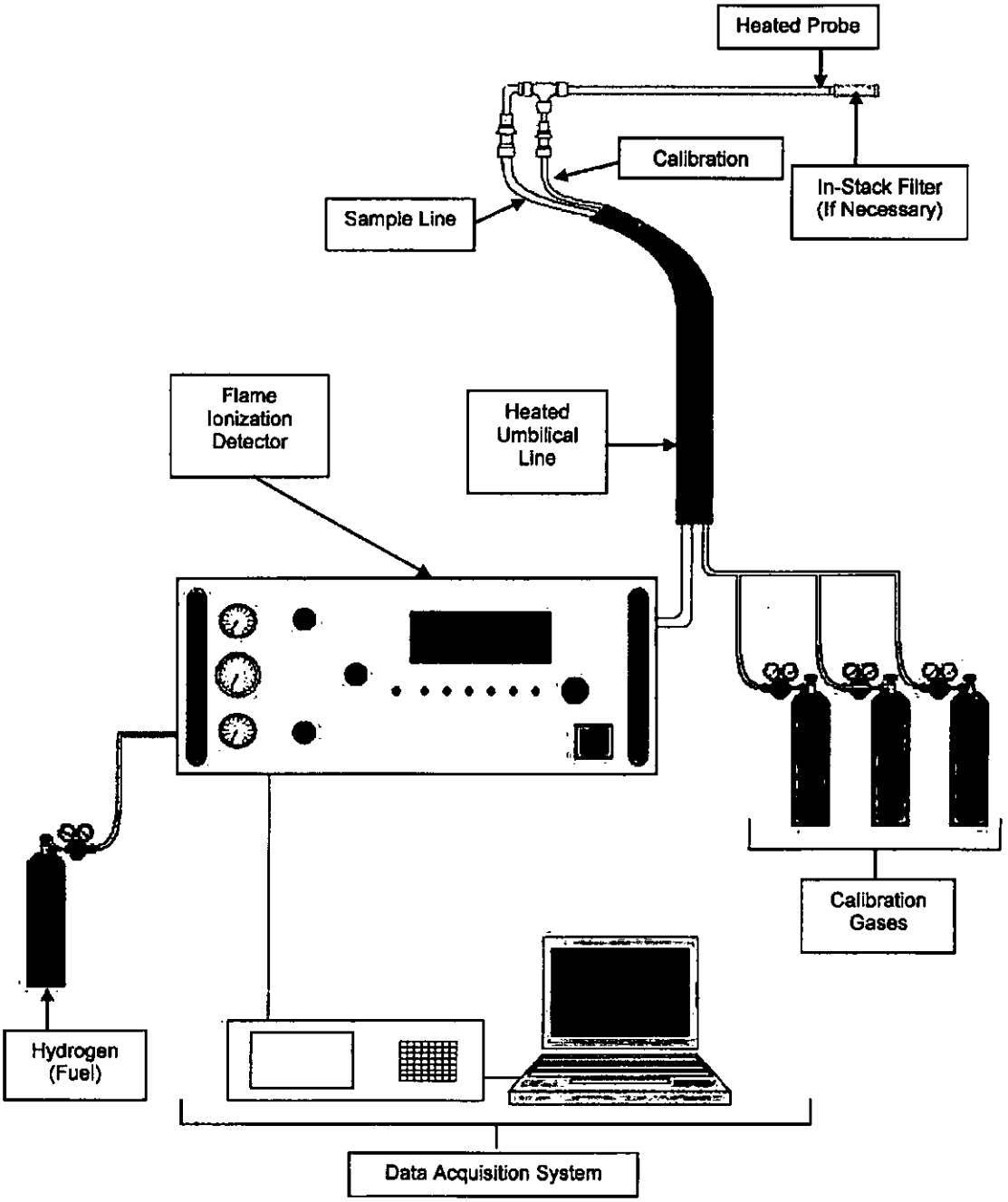

Appendix D - Calculation Nomenclature and Formulas

© Mostardi Platt

MOSTARDI PLATT

Volumetric Flow Nomenclature

A = Cross-sectional area of stack or duct, ft2
Bws = Water vapor in gas stream, proportion by volume
Cp = Pitot tube coefficient, dimensionless
Md = Dry molecular weight of gas, lb/lb-mole
Ms = Molecular weight of gas, wet basis, lb/lb-mole
Mw = Molecular weight of water, 18.0 lb/lb-mole
Pbar = Barometric pressure at testing site, in. Hg
Pg = Static pressure of gas, in. Hg (in. H2O/13.6)
DH= Static pressure of gas, in.H2O
Ps = Absolute pressure of gas, in. Hg = Pbar + Pg
Pstd = Standard absolute pressure, 29.92 in. Hg
Acfm = Actual volumetric gas flow rate
Scfm= Volumetric gas flow rate, corrected to standard conditions
Dscfm = Standard volumetric flow rate, corrected to dry conditions
R = Ideal gas constant, 21.85 in. Hg-ft3/°R-lb-mole
Ts = Average stack gas temperature, °F
Tm = Average dry gas meter temperature, oF
Tstd = Standard absolute temperature, 528°R
vs = Gas velocity, ft/sec
Vm(std)= Volume of gas sampled, corrected to standard conditions, scf
Vw(std) = Volume of water vapor in gas sample, corrected to standard conditions, scf
Vlc= Volume of liquid collected
Y = Dry gas meter calibration factor
Δp = Velocity head of gas, in. H2O
K1 = 17.647 °R/In. Hg
%EA = Percent excess air
%CO2 = Percent carbon dioxide by volume, dry basis
%O2 = Percent oxygen by volume, dry basis
%N2 = Percent nitrogen by volume, dry basis
0.264 = Ratio of O2 to N2 in air, v/v
0.28 = Molecular weight of N2 or CO, divided by 100
0.32 = Molecular weight of O2 divided by 100
0.44 = Molecular weight of CO2 divided by 100
13.6 = Specific gravity of mercury (Hg)

© Mostardi Platt

MOSTARDI PLATT

Volumetric Air Flow Calculations

$$Vm\ (std) = 17.647 \times Vm \times \left[\frac{\left(P_{bar} + \left[\frac{DH}{13.6}\right]\right)}{(460 + Tm)}\right] \times Y$$

$$Vw\ (std) = 0.0471 \times Vlc$$

$$Bws = \left[\frac{Vw\ (std)}{Vw\ (std) + Vm\ (std)}\right]$$

$$Md = (0.44 \times \%CO_2) + (0.32 \times \%O_2) + [0.28 \times (100 - \%CO_2 - \%O_2)]$$

$$Ms = Md \times (1 - Bws) + (18 \times Bws)$$

$$Vs = \sqrt{\frac{(Ts + 460)}{Ms \times Ps}} \times \sqrt{DP} \times Cp \times 85.49$$

$$Acfm = Vs \times Area\ (of\ stack\ or\ duct) \times 60$$

$$Scfm = Acfm \times 17.647 \times \left[\frac{Ps}{(460 + Ts)}\right]$$

$$Scfh = Scfm \times 60 \frac{min}{hr}$$

$$Dscfm = Scfm \times (1 - Bws)$$

© Mostardi Platt

MOSTARDI PLATT

Emission Rate Calculations

A pollutant emission rate (E), expressed as pounds of pollutant per million Btu heat input from the fuel combusted can be calculated by several methods as follows:

A. $C = C_s/7000$ where, C = pollutant concentration, lb/dscf
c_s = pollutant concentration, grains/dscf

B. If fuel flow is monitored and the fuel combusted during the test is sampled and analyzed for gross calorific value, then:

$$E = \frac{Q_{sd}C}{fuel\ flow\ rate\ (lb/hr)\ GCV} \times 10^6$$

Where E = lbs per million Btu
GCV = gross calorific value, Btu/lb
Q_{sd} = dry volumetric gas flow at standard conditions, dscf/hr

C. If an integrated gas sample is taken during the test and analyzed for $\%CO_2$ or $\%O_2$, dry basis by volume, with an approved USEPA Method 3 or 3A gas analyzer, then

$$E = CF_c \frac{100}{\%CO_2} \text{ or } E = CF_d \frac{20.9}{(20.9 - \%O_2)}$$

Where $\%CO_2$ and $\%O_2$ are expressed as percent values:

F_c = a factor representing a ratio of the volume of carbon dioxide generated to the calorific value of the specified fuel type combusted in Figure 1.

Fd = a factor representing a ratio of the volume of dry flue gases generated to the calorific value of the specified fuel type combusted in Figure 1.

Fuel Type	F_d	F_c	Fuel Type	F_d	F_c
Coal, Anthracite	10100	1970	Fuel Oil	9190	1420
Coal, Bituminous	9780	1800	Municipal	9570	1820
Coal, Lignite	9860	1910	Natural Gas	8710	1040
Coal, Sub-Bituminous	9820	1840	Wood	9240	1830

Figure 1. Fuel Type

D. If fuel sample increments are taken and composited during the test and an ultimate analysis is performed and the GCV is determined, then

$$F_C = \frac{321 \times 10^3(\%C)}{GCV} \quad where\ \%C = Carbon\ content\ by\ weight\ expressed\ as\ percent$$

$$F_d = \frac{[3.64(\%H) + 1.53(\%C) + 0.57(\%S) + 0.14(\%N) - 0.46(\%O_2)]}{GCV} \times 10^6$$

H = Hydrogen, percent; C = Carbon, percent; S = Sulfur, percent; N = Nitrogen, percent; O = Oxygen, percent

© Mostardi Platt

MOSTARDI PLATT

ppmv to lb/hr Conversion Calculations

1. $$ppm\ SO_2 \times 1.660 \times 10^{-7} = \frac{lbs/SO_2}{scf}$$

$$\frac{lbs\ SO_2}{scf} \times \frac{scf}{min} \times \frac{60\ min}{hr} = \frac{lbs\ SO_2}{hr}$$

2. $$ppm\ NO_x \times 1.194 \times 10^{-7} = \frac{lbs/NO_{x2}}{scf}$$

$$\frac{lbs\ NO_x}{scf} \times \frac{scf}{min} \times \frac{60\ min}{hr} = \frac{lbs\ NO_x}{hr}$$

3. $$ppm\ CO \times 7.266 \times 10^{-8} = \frac{lbs/CO}{scf}$$

$$\frac{lbs\ CO}{scf} \times \frac{scf}{min} \times \frac{60\ min}{hr} = \frac{lbs\ CO}{hr}$$

4. $$ppm\ C_3H_8 \times 1.142 \times 10^{-7} = \frac{lbsC_3H_8}{scf}$$

$$\frac{lbs\ C_3H_8}{scf} \times \frac{scf}{min} \times \frac{60\ min}{hr} = \frac{lbs\ C_3H_8}{hr}$$

5. $$ppm\ CH_4 \times 4.164 \times 10^{-8} = \frac{lbs/CH_4}{scf}$$

$$\frac{lbs\ CH_4}{scf} \times \frac{scf}{min} \times \frac{60\ min}{hr} = \frac{lbs\ CH_4}{hr}$$

6. $$ppm\ NMHC\ as\ C_3H_8 \times 9.3427 \times 10^{-8} = \frac{lbs\ C}{scf}$$

$$\frac{lbs\ C}{scf} \times \frac{lbsscf}{min} \times \frac{60\ min}{hr} = \frac{lbs\ C}{hr}$$

© Mostardi Platt

Appendix E - Reference Method Test Data (Computerized Sheets)

© Mostardi Platt

Method 25A Field Data Sheet

Project:	M170406	Operator:	Tim McD
Client:	East Balt Commissary, Inc.	Source:	1. Oxidizer Inlet
Location:	Chicago, IL Facility		2. Oxidizer Outlet
Date:	11/26/2017		3.

Parameters	Location 1	Location 2	Location 3
Test 1	Inlet	outlet	
Time	1010-1109	1010-1109	
VOC ppmv as ~~Ethanol~~ →	1044.4	16.5	← Ethanol CH_3CH_2OH
Air flow, scfm	2515	4771	
VOC lbs/hr as ~~Ethanol~~ →	26.21	0.56	← Ethanol
Removal Efficiency, %	97.86 %		
Test 2	Inlet	Outlet	
Time	1215 1314	1215 1314	
VOC ppmv as ~~Ethanol~~ →	1016.6	8.1	← Ethanol
Air flow, scfm	3463.5	5149.5	
VOC lbs/hr as ~~Ethanol~~ →	25.14	0.3	← Ethanol
Removal Efficiency, %	98.81 %		
Test 3	Inlet	Outlet	
Time	1355-1509	1355-1509	
VOC ppmv as ~~Ethanol~~ →	1017.4	10.1	← Ethanol
Air flow, scfm	3472	5237	
VOC lbs/hr as ~~Ethanol~~ →	25.22	0.38	← Ethanol
Removal Efficiency, %	98.39 %		

Ethanol CH_3CH_2OH MW 46.08

© Mostardi Platt

Client: East Balt Commissary, LLC
Facility: Chicago, Illinois
Project #: M170406
Location: Catalytic Oxidizer (Mid Inlet Loading)
Date: 1/26/17

Run 1

Time	NMHC ppmv Inlet A	CH4 ppmv Inlet A	NMHC ppmv outlet	CH4 ppmv outlet
10:10	290.08	185.63	28.03	138.49
10:11	290.91	217.88	28.60	153.83
10:12	291.86	234.64	27.99	150.20
10:13	291.88	202.51	24.71	130.16
10:14	291.98	175.97	23.29	119.56
10:15	293.19	174.91	25.23	130.79
10:16	295.76	214.94	30.59	162.30
10:17	299.72	286.48	36.50	198.10
10:18	301.65	305.35	35.99	198.57
10:19	299.11	254.28	28.87	153.32
10:20	297.45	201.23	24.86	130.63
10:21	297.38	186.36	24.80	128.13
10:22	297.38	191.19	24.93	129.57
10:23	296.74	186.13	24.49	126.79
10:24	294.56	176.31	24.59	130.32
10:25	294.41	188.71	25.50	131.09
10:26	294.45	197.72	25.02	125.24
10:27	294.28	185.56	25.15	132.82
10:28	291.82	172.30	20.21	106.51
10:29	289.28	117.82	15.35	78.62
10:30	289.28	110.37	15.91	84.06
10:31	289.22	115.41	16.20	82.17
10:32	289.18	130.53	15.78	78.21
10:33	289.25	87.36	10.41	50.03
10:34	289.26	59.05	10.27	49.55
10:35	289.28	69.23	11.17	54.87
10:36	289.32	79.94	12.45	62.28
10:37	291.52	87.94	11.56	56.82
10:38	291.96	67.92	9.47	44.00
10:39	291.99	51.96	9.03	42.59
10:40	293.68	62.98	9.83	46.85
10:41	294.46	67.50	9.43	44.73
10:42	292.77	60.06	9.92	48.76
10:43	293.48	62.53	10.63	52.16
10:44	293.05	62.26	9.89	48.61
10:45	291.91	57.50	8.95	41.51
10:46	293.25	54.99	8.75	41.90
10:47	294.56	59.76	9.59	47.68
10:48	294.54	66.77	11.37	56.31
10:49	295.89	93.89	15.96	79.35
10:50	297.49	161.26	20.50	102.97
10:51	296.47	193.44	18.14	92.14
10:52	293.74	149.92	17.19	91.06
10:53	290.49	98.46	10.46	52.21
10:54	286.68	58.27	8.50	40.14
10:55	286.13	56.33	9.59	45.06
10:56	283.60	55.01	8.37	38.47
10:57	281.46	49.61	9.27	43.52
10:58	281.47	59.44	10.63	52.24
10:59	281.64	94.70	21.29	113.13
11:00	283.95	199.44	20.37	107.96
11:01	281.46	120.70	14.31	72.26
11:02	281.41	94.72	9.69	46.22
11:03	278.81	57.57	7.96	35.75
11:04	278.82	44.29	9.72	44.98
11:05	278.77	64.48	10.52	51.20
11:06	278.76	75.30	9.45	46.27
11:07	278.67	66.14	8.90	43.49
11:08	278.21	53.70	8.18	37.79
11:09	276.69	43.23	8.95	40.64
Average	**290.10**	**122.70**	**16.50**	**84.40**
Min	276.67	43.23	7.96	35.75
Max	301.65	305.35	36.50	198.10

© Mostardi Platt

Client: East Balt Commissary, LLC
Facility: Chicago, Illinois
Project #: M170406
Location: Catalytic Oxidizer (Mid Inlet Loading)
Date: 1/26/17

Run 2

Time	NMHC ppmv Inlet A	CH4 ppmv Inlet A	NMHC ppmv outlet	CH4 ppmv outlet
12:15	259.36	65.08	9.89	50.01
12:16	261.92	68.62	11.67	59.44
12:17	264.50	75.19	12.61	63.25
12:18	267.08	70.03	9.83	48.67
12:19	269.58	49.12	6.76	31.75
12:20	272.12	40.51	8.18	40.58
12:21	273.69	51.22	8.94	43.18
12:22	274.49	55.38	9.08	44.46
12:23	276.24	50.65	7.76	36.24
12:24	276.95	43.37	7.75	36.68
12:25	279.50	43.91	7.77	37.93
12:26	281.57	45.95	8.00	37.05
12:27	281.96	45.98	7.83	34.74
12:28	284.07	46.62	8.46	38.00
12:29	284.07	51.13	8.88	41.14
12:30	284.14	50.69	7.70	37.53
12:31	284.09	43.26	6.87	33.79
12:32	283.99	40.75	7.71	35.32
12:33	284.00	50.89	8.16	36.81
12:34	284.03	46.30	7.47	33.21
12:35	283.93	38.88	6.53	29.57
12:36	283.99	38.14	6.90	33.38
12:37	283.95	49.14	8.59	43.26
12:38	281.87	59.56	9.23	45.79
12:39	281.40	51.37	9.10	42.58
12:40	281.42	54.41	9.05	41.73
12:41	279.50	45.24	7.38	32.95
12:42	280.61	37.27	7.00	33.18
12:43	281.44	45.71	8.55	41.51
12:44	281.44	54.33	8.88	41.97
12:45	281.39	47.29	7.62	32.88
12:46	279.98	39.40	7.63	34.10
12:47	280.13	44.79	8.30	40.58
12:48	281.48	51.03	8.10	40.17
12:49	281.47	47.55	7.15	35.38
12:50	281.54	41.19	7.51	32.91
12:51	281.44	40.08	7.38	32.90
12:52	281.50	43.21	8.42	38.02
12:53	281.71	43.27	7.19	35.81
12:54	281.52	44.07	7.60	36.70
12:55	281.49	44.03	6.95	32.19
12:56	281.49	37.57	6.88	29.32
12:57	281.43	35.63	6.97	30.00
12:58	281.79	38.37	8.64	40.41
12:59	283.95	52.71	8.00	37.42
13:00	283.95	46.19	7.46	36.40
13:01	284.07	49.26	9.08	43.83
13:02	286.61	63.84	9.76	47.12
13:03	288.64	58.31	8.13	37.57
13:04	286.60	38.47	6.68	30.81
13:05	289.05	35.75	6.84	32.42
13:06	291.63	42.69	7.61	38.15
13:07	291.83	52.35	7.86	37.56
13:08	291.83	42.64	7.26	32.31
13:09	293.98	40.67	7.56	33.77
13:10	296.71	48.79	9.55	46.46
13:11	297.31	77.97	10.27	52.65
13:12	297.33	63.08	7.23	33.00
13:13	297.37	42.98	6.83	28.78
13:14	297.40	38.09	7.48	31.91
Average	**282.40**	**48.30**	**8.10**	**38.30**
Min	259.36	35.63	6.53	28.78
Max	297.40	77.97	12.61	63.25

© Mostardi Platt

Client: East Balt Commissary, LLC
Facility: Chicago, Illinois
Project #: M170406
Location: Catalytic Oxidizer (Mid Inlet Loading)
Date: 1/26/17

Run 3

Time	NMHC ppmv Inlet A	CH4 ppmv Inlet A	NMHC ppmv outlet	CH4 ppmv outlet	
13:55	232.00	50.79	8.57	36.74	
13:56	239.45	41.50	7.89	31.96	
13:57	246.89	40.80	7.51	31.16	
13:58	252.19	40.79	8.29	36.39	
13:59	257.10	55.81	8.95	41.78	
14:00	262.10	52.63	7.21	33.04	
14:01	265.16	47.24	6.33	28.74	
14:02	267.71	40.29	6.93	28.80	
14:03	270.34	41.76	7.92	34.21	
14:04	272.84	45.17	7.91	33.80	
14:05	275.30	41.10	6.65	30.45	
14:06	276.15	41.26	7.28	32.99	
14:07	274.71	44.85	7.90	34.24	
14:08	273.63	46.04	8.18	34.26	
14:09	274.86	49.72	8.81	39.15	Break in production
14:25	271.08	163.08	22.54	106.04	
14:26	273.58	163.08	22.45	104.36	Back to Normal operation
14:27	273.85	155.82	21.44	100.45	
14:28	276.00	146.03	19.87	94.93	
14:29	278.44	140.52	20.69	100.58	
14:30	280.94	150.58	20.67	99.41	
14:31	283.44	148.51	19.69	95.17	
14:32	286.05	149.53	20.64	98.09	
14:33	288.56	144.40	17.88	83.97	
14:34	289.30	101.72	11.46	52.11	
14:35	289.24	60.50	7.81	34.47	
14:36	291.01	51.77	8.23	36.84	
14:37	293.53	53.52	8.79	36.52	
14:38	294.54	46.24	7.51	27.69	
14:39	294.55	40.74	6.19	31.62	
14:40	295.97	51.00	10.30	45.35	
14:41	298.67	72.13	11.80	53.01	
14:42	299.96	91.05	12.41	54.88	
14:43	298.96	87.66	11.10	45.87	
14:44	296.32	71.03	11.09	45.59	
14:45	294.57	66.27	8.55	35.45	
14:46	293.83	49.48	8.42	35.91	
14:47	291.97	50.15	8.67	37.77	
14:48	291.90	59.15	8.14	34.43	
14:49	291.39	50.02	7.73	31.08	
14:50	289.23	45.97	8.15	31.93	
14:51	289.20	47.37	8.76	37.49	
14:52	289.23	55.51	8.37	36.98	
14:53	289.24	47.91	7.01	30.73	
14:54	289.22	38.14	6.62	27.67	
14:55	289.28	35.61	7.60	31.95	
14:56	289.34	43.39	9.10	39.01	
14:57	289.32	50.84	8.67	37.24	
14:58	289.23	41.50	7.18	30.25	
14:59	289.19	40.82	7.04	30.67	
15:00	289.24	40.79	7.32	31.18	
15:01	289.25	43.03	7.99	31.31	
15:02	289.30	53.88	8.42	34.49	
15:03	289.29	50.53	7.67	34.21	
15:04	289.28	41.03	6.87	29.63	
15:05	291.17	40.11	7.46	32.40	
15:06	291.94	40.87	7.33	29.10	
15:07	291.90	44.17	7.87	30.17	
15:08	291.99	46.08	7.35	28.87	
15:09	291.95	41.60	6.36	26.39	
Average	**282.50**	**65.50**	**10.10**	**44.50**	
Min	232.00	35.61	6.33	26.39	
Max	299.96	163.08	22.54	106.04	

© Mostardi Platt

East Bait Commissary, LLC
Chicago, IL
Oxidizer Inlet Duct
Volumetric Flow Data - Mid Inlet Loading

Test Run	Test Date	Pre Flow SCFM	Post Flow SCFM	Average Reference Method Flow SCFM
Pre 1/Post 1	01/26/17	3,469	3,587	3,528
Pre 2/Post 2-Pre 3	01/26/17	3,493	3,461	3,477
Post 2/Pre 3/Post 3	01/26/17	3,461	3,501	3,481

© Mostardi Platt

Client:	East Balt Commissary, LLC	
Facility:	Chicago, IL	
Test Location:	Oxidizer Inlet Duct	
Project #:	M170406	
Test Method:	2 (Compliance)	
Test Engineer:	JEA	
Test Technician:	LCM	
Type of Fuel Firing:	Natural Gas	
Temp ID:	CM 6	
Meter ID:	CM 6	
Pitot ID:	80	
Pitot Type:	S-Type	
Pitot Tube Coefficient:	0.840	
Probe Length:	5.0	**ft**
Sample Plane:	Horizontal	
Port Length:	2.00	**in.**
Port Size (diameter):	.4.00	**in.**
Port Type:	Nipple	
Duct Shape:	Circular	
Diameter:	1.833333333	**ft**
Duct Area:	2.64	**Sq. Ft.**
Upstream Diameters:	73"	
Downstream Diameters:	81"	
Number of Ports Sampled:	2	
Number of Points per Port:	8	
Total Number of Traverse Points:	16	
Operating Level:	Mid	

© Mostardi Platt

METHOD 2 VOLUMETRIC FLOW DATA

Project Number:	M170406	**Operating Level:**	Mid Inlet Loading		
Client:	East Balt Commissary, LLC	**Run No.:**	Pre 1		
Facility:	Chicago, IL	**Test Date:**	1/26/2017		
Test Location:	Oxidizer Inlet Duct	**Start Time:**	9:35		
Pitot ID:	80	**End Time:**	9:41		
Pitot Coefficient:	0.840	**Test Engineer:**	JEA	**Test Tech:**	LCM
Probe Length, Feet:	5	**Port Length, Inches:**	2		

Port	Point	DP (In. H_2O)	Sqrt. DP	Temp (°F)	Velocity (V)	Port	Point	DP (In. H_2O)	Sqrt. DP	Temp (°F)	Velocity (V)
A	1	0.31	0.5568	318.0	39.70	B	1	0.33	0.5745	318.0	40.96
A	2	0.33	0.5745	317.0	40.94	B	2	0.31	0.5568	316.0	39.65
A	3	0.27	0.5196	317.0	37.03	B	3	0.28	0.5292	316.0	37.68
A	4	0.15	0.3873	316.0	27.58	B	4	0.17	0.4123	316.0	29.36
A	5	0.21	0.4583	316.0	32.63	B	5	0.20	0.4472	314.0	31.81
A	6	0.17	0.4123	316.0	29.36	B	6	0.15	0.3873	314.0	27.55
A	7	0.20	0.4472	316.0	31.85	B	7	0.18	0.4243	312.0	30.14
A	8	0.14	0.3742	314.0	26.61	B	8	0.16	0.4000	312.0	28.41

Test Parameters

P_{bar} - Barometric pressure, inches Hg	29.10	% CO_2	0.50
P_g - Stack Pressure, inches of H_2O	-1.50	% O_2	19.50
P_s - Absolute stack pressure, inches Hg	28.99	% N_2	80.00
t_s - Average stack temperature, °F	315.5	Md - dry basis lb/lb mole	28.86
Duct Shape:	Circular	Ms - wet basis lb/lb mole	27.220
Diameter, Feet	1.83333333		
		Bws - Moisture content fraction	**0.161**
Cross Sectional Area of Stack, Ft^2	2.64	Moisture determined by wb/db?	N

Method 2 Results

Average DP	0.2225	Q - ACFM	5,259
Average Sqrt DP	0.4663	Qsd - DSCFM	2,945
Average Velocity Vs (ft/sec)	33.199	Qs - SCFM	3,469
		Qs - SCFH	208,146

© Mostardi Platt

METHOD 2 VOLUMETRIC FLOW DATA

Project Number:	M170406	**Operating Level:**	Mid Inlet Loading		
Client:	East Balt Commissary, LLC	**Run No.:**	Post 1		
Facility:	Chicago, IL	**Test Date:**	1/26/2017		
Test Location:	Oxidizer Inlet Duct	**Start Time:**	11:03		
Pitot ID:	80	**End Time:**	11:09		
Pitot Coefficient:	0.840	**Test Engineer:**	JEA	**Test Tech:**	LCM
Probe Length, Feet:	5	**Port Length, Inches:**	2		

Port	Point	DP (In. H_2O)	Sqrt. DP	Temp (°F)	Velocity (V)	Port	Point	DP (In. H_2O)	Sqrt. DP	Temp (°F)	Velocity (V)
A	1	0.36	0.6000	325.0	42.97	B	1	0.31	0.5568	321.0	39.78
A	2	0.38	0.6164	323.0	44.10	B	2	0.34	0.5831	321.0	41.66
A	3	0.25	0.5000	321.0	35.72	B	3	0.27	0.5196	319.0	37.07
A	4	0.17	0.4123	320.0	29.44	B	4	0.22	0.4690	318.0	33.44
A	5	0.24	0.4899	323.0	35.04	B	5	0.24	0.4899	316.0	34.89
A	6	0.16	0.4000	318.0	28.52	B	6	0.16	0.4000	315.0	28.47
A	7	0.20	0.4472	317.0	31.87	B	7	0.19	0.4359	314.0	31.00
A	8	0.16	0.4000	316.0	28.49	B	8	0.17	0.4123	314.0	29.32

Test Parameters

P_{bar} - Barometric pressure, inches Hg	29.10	% CO_2	0.50
P_g - Stack Pressure, inches of H_2O	-1.50	% O_2	19.50
P_s - Absolute stack pressure, inches Hg	28.99	% N_2	80.00
t_s - Average stack temperature, °F	318.8	Md - dry basis lb/lb mole	28.86
Duct Shape:	Circular	Ms - wet basis lb/lb mole	27.220
Diameter, Feet	1.83333333		
		Bws - Moisture content fraction	**0.151**
Cross Sectional Area of Stack, Ft^2	2.64	Moisture determined by wb/db?	N

Method 2 Results

Average DP	0.2388	Q - ACFM	5,461
Average Sqrt DP	0.4833	Qsd - DSCFM	3,046
Average Velocity Vs (ft/sec)	34.478	Qs - SCFM	3,587
		Qs - SCFH	215,245

© Mostardi Platt

METHOD 2 VOLUMETRIC FLOW DATA

Project Number:	M170406	**Operating Level:**	Mid Inlet Loading		
Client:	East Balt Commissary, LLC	**Run No.:**	Pre 2		
Facility:	Chicago, IL	**Test Date:**	1/26/2017		
Test Location:	Oxidizer Inlet Duct	**Start Time:**	12:24		
Pitot ID:	80	**End Time:**	12:31		
Pitot Coefficient:	0.840	**Test Engineer:**	JEA	**Test Tech:**	LCM
Probe Length, Feet:	5	**Port Length, Inches:**	2		

Port	Point	DP (In. H_2O)	Sqrt. DP	Temp (°F)	Velocity (V)	Port	Point	DP (In. H_2O)	Sqrt. DP	Temp (°F)	Velocity (V)
A	1	0.35	0.5916	306.0	41.82	B	1	0.37	0.6083	307.0	43.02
A	2	0.33	0.5745	308.0	40.66	B	2	0.32	0.5657	305.0	39.96
A	3	0.24	0.4899	309.0	34.69	B	3	0.26	0.5099	301.0	35.92
A	4	0.26	0.5099	307.0	36.06	B	4	0.24	0.4899	300.0	34.49
A	5	0.22	0.4690	303.0	33.09	B	5	0.21	0.4583	300.0	32.26
A	6	0.20	0.4472	311.0	31.71	B	6	0.19	0.4359	298.0	30.65
A	7	0.11	0.3317	304.0	23.41	B	7	0.12	0.3464	297.0	24.34
A	8	0.10	0.3162	301.0	22.28	B	8	0.10	0.3162	297.0	22.22

Test Parameters

P_{bar} - Barometric pressure, inches Hg	29.10	% CO_2	0.50
P_g - Stack Pressure, inches of H_2O	-1.50	% O_2	19.50
P_s - Absolute stack pressure, inches Hg	28.99	% N_2	80.00
t_s - Average stack temperature, °F	303.4	Md - dry basis lb/lb mole	28.86
Duct Shape:	Circular	Ms - wet basis lb/lb mole	27.274
Diameter, Feet	1.83333333		
		Bws - Moisture content fraction	**0.146**
Cross Sectional Area of Stack, Ft^2	2.64	Moisture determined by wb/db?	N

Method 2 Results

Average DP	0.2263	Q - ACFM	5,212
Average Sqrt DP	0.4663	Qsd - DSCFM	2,983
Average Velocity Vs (ft/sec)	32.901	Qs - SCFM	3,493
		Qs - SCFH	209,556

© Mostardi Platt

METHOD 2 VOLUMETRIC FLOW DATA

Project Number:	M170406	**Operating Level:**	Mid Inlet Loading		
Client:	East Balt Commissary, LLC	**Run No.:**	Post 2/Pre 3		
Facility:	Chicago, IL	**Test Date:**	1/26/2017		
Test Location:	Oxidizer Inlet Duct	**Start Time:**	13:09		
Pitot ID:	80	**End Time:**	13:16		
Pitot Coefficient:	0.840	**Test Engineer:**	JEA	**Test Tech:**	LCM
Probe Length, Feet:	5	**Port Length, Inches:**	2		

Port	Point	DP (In. H_2O)	Sqrt. DP	Temp (°F)	Velocity (V)	Port	Point	DP (In. H_2O)	Sqrt. DP	Temp (°F)	Velocity (V)
A	1	0.38	0.6164	310.0	43.68	B	1	0.40	0.6325	310.0	44.82
A	2	0.31	0.5568	307.0	39.38	B	2	0.36	0.6000	306.0	42.41
A	3	0.27	0.5196	305.0	36.70	B	3	0.23	0.4796	305.0	33.88
A	4	0.20	0.4472	301.0	31.51	B	4	0.21	0.4583	303.0	32.33
A	5	0.21	0.4583	306.0	32.39	B	5	0.18	0.4243	301.0	29.89
A	6	0.24	0.4899	310.0	34.72	B	6	0.14	0.3742	297.0	26.29
A	7	0.13	0.3606	303.0	25.43	B	7	0.13	0.3606	295.0	25.30
A	8	0.11	0.3317	302.0	23.38	B	8	0.08	0.2828	293.0	19.82

Test Parameters

P_{bar} - Barometric pressure, inches Hg	29.10	% CO_2	0.50
P_g - Stack Pressure, inches of H_2O	-1.50	% O_2	19.50
P_s - Absolute stack pressure, inches Hg	28.99	% N_2	80.00
t_s - Average stack temperature, °F	303.4	Md - dry basis lb/lb mole	28.86
Duct Shape:	Circular	Ms - wet basis lb/lb mole	27.274
Diameter, Feet	1.83333333		
		Bws - Moisture content fraction	**0.146**
Cross Sectional Area of Stack, Ft^2	2.64	Moisture determined by wb/db?	N

Method 2 Results

Average DP	0.2238	Q - ACFM	5,164
Average Sqrt DP	0.4620	Qsd - DSCFM	2,955
Average Velocity Vs (ft/sec)	32.602	Qs - SCFM	3,461
		Qs - SCFH	207,645

© Mostardi Platt

METHOD 2 VOLUMETRIC FLOW DATA

Project Number:	M170406	**Operating Level:**	Mid Inlet Loading		
Client:	East Balt Commissary, LLC	**Run No.:**	Post 3		
Facility:	Chicago, IL	**Test Date:**	1/26/2017		
Test Location:	Oxidizer Inlet Duct	**Start Time:**	15:04		
Pitot ID:	80	**End Time:**	15:10		
Pitot Coefficient:	0.840	**Test Engineer:**	JEA	**Test Tech:**	LCM
Probe Length, Feet:	5	**Port Length, Inches:**	2		

Port	Point	DP (In. H_2O)	Sqrt. DP	Temp (°F)	Velocity (V)	Port	Point	DP (In. H_2O)	Sqrt. DP	Temp (°F)	Velocity (V)
A	1	0.40	0.6325	321.0	45.20	B	1	0.42	0.6481	310.0	45.99
A	2	0.34	0.5831	320.0	41.65	B	2	0.35	0.5916	307.0	41.90
A	3	0.26	0.5099	319.0	36.40	B	3	0.24	0.4899	305.0	34.65
A	4	0.23	0.4796	317.0	34.19	B	4	0.20	0.4472	305.0	31.63
A	5	0.22	0.4690	317.0	33.44	B	5	0.17	0.4123	303.0	29.13
A	6	0.18	0.4243	314.0	30.19	B	6	0.15	0.3873	299.0	27.29
A	7	0.17	0.4123	310.0	29.26	B	7	0.12	0.3464	296.0	24.36
A	8	0.13	0.3606	302.0	25.45	B	8	0.09	0.3000	291.0	21.03

Test Parameters

P_{bar} - Barometric pressure, inches Hg	29.10	% CO_2	0.50
P_g - Stack Pressure, inches of H_2O	-1.50	% O_2	19.50
P_s - Absolute stack pressure, inches Hg	28.99	% N_2	80.00
t_s - Average stack temperature, °F	308.5	Md - dry basis lb/lb mole	28.86
Duct Shape:	Circular	Ms - wet basis lb/lb mole	27.198
Diameter, Feet	1.83333333		
		Bws - Moisture content fraction	**0.153**
Cross Sectional Area of Stack, Ft^2	2.64	Moisture determined by wb/db?	N

Method 2 Results

Average DP	0.2294	Q - ACFM	5,260
Average Sqrt DP	0.4684	Qsd - DSCFM	2,966
Average Velocity Vs (ft/sec)	33.206	Qs - SCFM	3,501
		Qs - SCFH	210,086

© Mostardi Platt

METHOD 4 MOISTURE DETERMINATION

Project Number:	M170406	**Run Number:**	1		
Client:	East Balt Commissary, LLC	**Operating Level:**	Mid Inlet Loading		
Facility:	Chicago, IL	**Time:**	**Start-** 9:27		**End-** 10:12
Test Location:	Oxidizer Inlet Duct	**Test Engineer:**	JEA		
Test Date:	1/26/2017	**Test Tech:**	LCM		

Pressure, Barometric(Hg"):	29.10	**Meter Calibration (Y):**	0.993
Delta H:	1.610	**Meter Delta H (dH):**	1.610
Meter Initial Volume:	77.320	**Initial Wt:**	232.2
Meter Final Volume:	111.436	**Final Wt:**	240.2
Meter Temperature:	37.65	**Initial Volume:**	200.0
Meter Volume dscf:	35.100	**Final Volume:**	325.0
		Water Vapor in Flue Gas (Bws):	**0.151**

Project Number:	M170406	**Run Number:**	2		
Client:	East Balt Commissary, LLC	**Operating Level:**	Mid Inlet Loading		
Facility:	Chicago, IL	**Time:**	**Start-** 12:15		**End-** 13:00
Test Location:	Oxidizer Inlet Duct	**Test Engineer:**	JEA		
Test Date:	1/26/2017	**Test Tech:**	LCM		

Pressure, Barometric(Hg"):	29.10	**Meter Calibration (Y):**	0.993
Delta H:	1.610	**Meter Delta H (dH):**	1.610
Meter Initial Volume:	111.872	**Initial Wt:**	240.2
Meter Final Volume:	145.749	**Final Wt:**	246.1
Meter Temperature:	40.75	**Initial Volume:**	325.0
Meter Volume dscf:	34.639	**Final Volume:**	445.0
		Water Vapor in Flue Gas (Bws):	**0.146**

Project Number:	M170406	**Run Number:**	3		
Client:	East Balt Commissary, LLC	**Operating Level:**	Mid Inlet Loading		
Facility:	Chicago, IL	**Time:**	**Start-** 13:55		**End-** 14:40
Test Location:	Oxidizer Inlet Duct	**Test Engineer:**	JEA		
Test Date:	1/26/2017	**Test Tech:**	LCM		

Pressure, Barometric(Hg"):	29.10	**Meter Calibration (Y):**	0.993
Delta H:	1.610	**Meter Delta H (dH):**	1.610
Meter Initial Volume:	146.151	**Initial Wt:**	246.1
Meter Final Volume:	180.038	**Final Wt:**	253.9
Meter Temperature:	41.85	**Initial Volume:**	445.0
Meter Volume dscf:	34.573	**Final Volume:**	570.0
		Water Vapor in Flue Gas (Bws):	**0.153**

© Mostardi Platt

East Balt Commissary, LLC
Chicago, IL
Oxidizer Outlet Duct
Volumetric Flow Data - Mid Inlet Loading

Test Run	Test Date	Pre Flow SCFM	Post Flow SCFM	Average Reference Method Flow SCFM
Pre 1/Post 1	01/26/17	4,770	4,766	4,768
Pre 2/Post 2-Pre 3	01/26/17	5,116	5,183	5,149
Post 2-Pre 3/Post 3	01/26/17	5,183	5,291	5,237

© Mostardi Platt

Client:	East Balt Commissary, LLC	
Facility:	Chicago, IL	
Test Location:	Oxidizer Outlet Duct	
Project #:	M170406	
Test Method:	2 (Compliance)	
Test Engineer:	JEA	
Test Technician:	LCM	
Type of Fuel Firing:	Natural Gas	
Temp ID:	CM 10	
Meter ID:	CM 10	
Pitot ID:	80	
Pitot Type:	S-Type	
Pitot Tube Coefficient:	0.840	
Probe Length:	5.0	**ft**
Sample Plane:	Horizontal	
Port Length:	5.00	**in.**
Port Size (diameter):	3.00	**in.**
Port Type:	Nipple	
Duct Shape:	Circular	
Diameter:	1.87	**ft**
Duct Area:	2.75	**Sq. Ft.**
Upstream Diameters:	>2	
Downstream Diameters:	107"	
Number of Ports Sampled:	2	
Number of Points per Port:	8	
Total Number of Traverse Points:	16	
Operating Level:	Mid	

© Mostardi Platt

METHOD 2 VOLUMETRIC FLOW DATA

Project Number:	M170406	**Operating Level:**	Mid Inlet Loading		
Client:	East Balt Commissary, LLC	**Run No.:**	Pre 1		
Facility:	Chicago, IL	**Test Date:**	1/26/2017		
Test Location:	Oxidizer Outlet Duct	**Start Time:**	9:45		
Pitot ID:	80	**End Time:**	9:51		
Pitot Coefficient:	0.840	**Test Engineer:**	JEA	**Test Tech:**	LCM
Probe Length, Feet:	5	**Port Length, Inches:**	5		

Port	Point	DP (in. H_2O)	Sqrt. DP	Temp (°F)	Velocity (V)	Port	Point	DP (in. H_2O)	Sqrt. DP	Temp (°F)	Velocity (V)
A	1	0.41	0.6403	449.0	48.59	B	1	0.40	0.6325	455.0	48.15
A	2	0.44	0.6633	451.0	50.39	B	2	0.45	0.6708	448.0	50.87
A	3	0.43	0.6557	455.0	49.92	B	3	0.42	0.6481	455.0	49.34
A	4	0.41	0.6403	465.0	49.01	B	4	0.40	0.6325	470.0	48.54
A	5	0.40	0.6325	470.0	48.54	B	5	0.38	0.6164	470.0	47.31
A	6	0.45	0.6708	475.0	51.62	B	6	0.46	0.6782	481.0	52.36
A	7	0.51	0.7141	490.0	55.40	B	7	0.55	0.7416	490.0	57.53
A	8	0.72	0.8485	485.0	65.65	B	8	0.69	0.8307	480.0	64.10

Test Parameters

P_{bar} - Barometric pressure, inches Hg	29.10	% CO_2	0.50
P_g - Stack Pressure, inches of H_2O	-0.50	% O_2	19.50
P_s - Absolute stack pressure, inches Hg	29.06	% N_2	80.00
t_s - Average stack temperature, °F	468.1	Md - dry basis lb/lb mole	28.86
Duct Shape:	Circular	Ms - wet basis lb/lb mole	28.013
Diameter, Feet	1.87		
		Bws - Moisture content fraction	**0.078**
Cross Sectional Area of Stack, Ft^2	2.75	Moisture determined by wb/db?	N

Method 2 Results

Average DP	0.4700	Q - ACFM	8,631
Average Sqrt DP	0.6823	Qsd - DSCFM	4,398
Average Velocity Vs (ft/sec)	52.311	Qs - SCFM	4,770
		Qs - SCFH	286,198

© Mostardi Platt

METHOD 2 VOLUMETRIC FLOW DATA

Project Number:	M170406	**Operating Level:**	Mid Inlet Loading		
Client:	East Balt Commissary, LLC	**Run No.:**	Post 1		
Facility:	Chicago, IL	**Test Date:**	1/28/2017		
Test Location:	Oxidizer Outlet Duct	**Start Time:**	11:13		
Pitot ID:	80	**End Time:**	11:19		
Pitot Coefficient:	0.840	**Test Engineer:**	JEA	**Test Tech:**	LCM
Probe Length, Feet:	5	**Port Length, Inches:**	5		

Port	Point	DP (in. H_2O)	Sqrt. DP	Temp (°F)	Velocity (V)	Port	Point	DP (in. H_2O)	Sqrt. DP	Temp (°F)	Velocity (V)
A	1	0.45	0.6708	461.0	51.24	B	1	0.44	0.6633	464.0	50.75
A	2	0.39	0.6245	462.0	47.72	B	2	0.47	0.6856	461.0	52.36
A	3	0.37	0.6083	464.0	46.54	B	3	0.41	0.6403	455.0	48.75
A	4	0.42	0.6481	471.0	49.77	B	4	0.39	0.6245	461.0	47.70
A	5	0.44	0.6633	473.0	50.99	B	5	0.35	0.5916	465.0	45.28
A	6	0.47	0.6856	477.0	52.62	B	6	0.48	0.6928	470.0	53.17
A	7	0.53	0.7280	472.0	55.94	B	7	0.59	0.7681	476.0	59.14
A	8	0.66	0.8124	476.0	62.55	B	8	0.64	0.8000	483.0	61.83

Test Parameters

P_{bar} - Barometric pressure, inches Hg	29.10	% CO_2	0.50
P_g - Stack Pressure, inches of H_2O	-0.50	% O_2	19.50
P_s - Absolute stack pressure, inches Hg	29.06	% N_2	80.00
t_s - Average stack temperature, °F	468.2	Md - dry basis lb/lb mole	28.86
Duct Shape:	Circular	Ms - wet basis lb/lb mole	28.013
Diameter, Feet	1.87		
		Bws - Moisture content fraction	**0.078**
Cross Sectional Area of Stack, Ft^2	2.75	Moisture determined by wb/db?	N

Method 2 Results

Average DP	0.4688	Q - ACFM	8,625
Average Sqrt DP	0.6817	Qsd - DSCFM	4,394
Average Velocity Vs (ft/sec)	52.270	Qs - SCFM	4,766
		Qs - SCFH	285,938

© Mostardi Platt

METHOD 2 VOLUMETRIC FLOW DATA

Project Number:	M170406	**Operating Level:**	Mid Inlet Loading
Client:	East Balt Commissary, LLC	**Run No.:**	Pre 2
Facility:	Chicago, IL	**Test Date:**	1/26/2017
Test Location:	Oxidizer Outlet Duct	**Start Time:**	12:15
Pitot ID:	80	**End Time:**	12:21
Pitot Coefficient:	0.840	**Test Engineer:**	JEA
Probe Length, Feet:	5	**Port Length, Inches:**	5

Test Tech: LCM

Port	Point	DP (in. H_2O)	Sqrt. DP	Temp (°F)	Velocity (V)	Port	Point	DP (in. H_2O)	Sqrt. DP	Temp (°F)	Velocity (V)
A	1	0.42	0.6481	469.0	49.86	B	1	0.41	0.6403	474.0	49.39
A	2	0.45	0.6708	476.0	51.80	B	2	0.47	0.6856	481.0	53.08
A	3	0.48	0.6928	481.0	53.64	B	3	0.49	0.7000	467.0	53.80
A	4	0.47	0.6856	486.0	53.22	B	4	0.44	0.6633	463.0	50.87
A	5	0.44	0.6633	490.0	51.61	B	5	0.55	0.7416	471.0	57.12
A	6	0.51	0.7141	467.0	54.88	B	6	0.72	0.8485	463.0	65.07
A	7	0.69	0.8307	460.0	63.60	B	7	0.70	0.8367	461.0	64.09
A	8	0.73	0.8544	457.0	65.31	B	8	0.66	0.8124	460.0	62.20

Test Parameters

P_{bar} - Barometric pressure, inches Hg	29.10	% CO_2	0.50
P_g - Stack Pressure, inches of H_2O	-0.50	% O_2	19.50
P_s - Absolute stack pressure, inches Hg	29.06	% N_2	80.00
t_s - Average stack temperature, °F	470.4	Md - dry basis lb/lb mole	28.86
Duct Shape:	Circular	Ms - wet basis lb/lb mole	27.850
Diameter, Feet	1.87		
		Bws - Moisture content fraction	**0.093**
Cross Sectional Area of Stack, Ft^2	2.75	Moisture determined by wb/db?	N

Method 2 Results

Average DP	0.5394	Q - ACFM	9,280
Average Sqrt DP	0.7305	Qsd - DSCFM	4,640
Average Velocity Vs (ft/sec)	56.243	Qs - SCFM	5,116
		Qs - SCFH	306,945

© Mostardi Platt

METHOD 2 VOLUMETRIC FLOW DATA

Project Number:	M170406	**Operating Level:**	Mid Inlet Loading		
Client:	East Balt Commissary, LLC	**Run No.:**	Post 2/ Pre3		
Facility:	Chicago, IL	**Test Date:**	1/26/2017		
Test Location:	Oxidizer Outlet Duct	**Start Time:**	13:00		
Pitot ID:	80	**End Time:**	13:06		
Pitot Coefficient:	0.840	**Test Engineer:**	JEA	**Test Tech:**	LCM
Probe Length, Feet:	5	**Port Length, Inches:**	5		

Port	Point	DP (in. H_2O)	Sqrt. DP	Temp (°F)	Velocity (V)	Port	Point	DP (in. H_2O)	Sqrt. DP	Temp (°F)	Velocity (V)
A	1	0.41	0.6403	472.0	49.34	B	1	0.39	0.6245	480.0	48.33
A	2	0.44	0.6633	476.0	51.22	B	2	0.45	0.6708	483.0	52.00
A	3	0.46	0.6782	483.0	52.57	B	3	0.51	0.7141	482.0	54.73
A	4	0.43	0.6557	494.0	51.12	B	4	0.57	0.7550	460.0	57.80
A	5	0.50	0.7071	461.0	54.17	B	5	0.59	0.7681	474.0	59.25
A	6	0.66	0.8124	460.0	62.20	B	6	0.74	0.8602	461.0	65.90
A	7	0.62	0.7874	455.0	60.12	B	7	0.71	0.8426	455.0	64.34
A	8	0.71	0.8426	451.0	64.19	B	8	0.64	0.8000	452.0	60.98

Test Parameters

P_{bar} - Barometric pressure, inches Hg	29.10	% CO_2	0.50
P_g - Stack Pressure, inches of H_2O	-0.50	% O_2	19.50
P_s - Absolute stack pressure, inches Hg	29.06	% N_2	80.00
t_s - Average stack temperature, °F	467.4	Md - dry basis lb/lb mole	28.86
Duct Shape:	Circular	Ms - wet basis lb/lb mole	27.850
Diameter, Feet	1.87		
		Bws - Moisture content fraction	**0.093**
Cross Sectional Area of Stack, Ft^2	2.75	Moisture determined by wb/db?	N

Method 2 Results

Average DP	0.5519	Q - ACFM	9,372
Average Sqrt DP	0.7389	Qsd - DSCFM	4,701
Average Velocity Vs (ft/sec)	56.799	Qs - SCFM	5,183
		Qs - SCFH	310,964

© Mostardi Platt

METHOD 2 VOLUMETRIC FLOW DATA

Project Number:	M170406	**Operating Level:**	Mid Inlet Loading		
Client:	East Balt Commissary, LLC	**Run No.:**	Post 3		
Facility:	Chicago, IL	**Test Date:**	1/26/2017		
Test Location:	Oxidizer Outlet Duct	**Start Time:**	15:13		
Pitot ID:	80	**End Time:**	15:19		
Pitot Coefficient:	0.840	**Test Engineer:**	JEA	**Test Tech:**	LCM
Probe Length, Feet:	5	**Port Length, Inches:**	5		

Port	Point	DP (In. H_2O)	Sqrt. DP	Temp (°F)	Velocity (V)	Port	Point	DP (In. H_2O)	Sqrt. DP	Temp (°F)	Velocity (V)
A	1	0.42	0.6481	481.0	50.24	B	1	0.41	0.6403	483.0	49.69
A	2	0.45	0.6708	476.0	51.86	B	2	0.47	0.6856	477.0	53.03
A	3	0.47	0.6856	464.0	52.66	B	3	0.53	0.7280	460.0	55.80
A	4	0.42	0.6481	462.0	49.73	B	4	0.60	0.7746	454.0	59.18
A	5	0.51	0.7141	460.0	54.74	B	5	0.68	0.8246	451.0	62.90
A	6	0.69	0.8307	456.0	63.53	B	6	0.72	0.8485	450.0	64.69
A	7	0.66	0.8124	454.0	62.07	B	7	0.76	0.8718	450.0	66.46
A	8	0.69	0.8307	450.0	63.32	B	8	0.64	0.8000	447.0	60.89

Test Parameters

P_{bar} - Barometric pressure, inches Hg	29.10	% CO_2	0.50
P_g - Stack Pressure, inches of H_2O	-0.50	% O_2	19.50
P_s - Absolute stack pressure, inches Hg	29.06	% N_2	80.00
t_s - Average stack temperature, °F	460.9	Md - dry basis lb/lb mole	28.86
Duct Shape:	Circular	Ms - wet basis lb/lb mole	27.785
Diameter, Feet	1.87		
		Bws - Moisture content fraction	**0.099**
Cross Sectional Area of Stack, Ft^2	2.75	Moisture determined by wb/db?	N

Method 2 Results

Average DP	0.5700	Q - ACFM	9,501
Average Sqrt DP	0.7509	Qsd - DSCFM	4,767
Average Velocity Vs (ft/sec)	57.583	Qs - SCFM	5,291
		Qs - SCFH	317,480

© Mostardi Platt

METHOD 4 MOISTURE DETERMINATION

Project Number:	M170406	**Run Number:**	1		
Client:	East Balt Commissary, LLC	**Operating Level:**	Mid Inlet Loading		
Facility:	Chicago, IL	**Time:**	**Start-** 10:12	**End-** 10:57	
Test Location:	Oxidizer Outlet Duct	**Test Engineer:**	JEA		
Test Date:	1/26/2017	**Test Tech:**	LCM		
Pressure, Barometric(Hg"):	29.10	**Meter Calibration (Y):**	1.015		
Delta H:	1.537	**Meter Delta H (dH):**	1.537		
Meter Initial Volume:	17.420	**Initial Wt:**	249.5		
Meter Final Volume:	51.640	**Final Wt:**	253.8		
Meter Temperature:	37.00	**Initial Volume:**	200.0		
Meter Volume dscf:	36.028	**Final Volume:**	260.0		
		Water Vapor in Flue Gas (Bws):	**0.078**		

Project Number:	M170406	**Run Number:**	2		
Client:	East Balt Commissary, LLC	**Operating Level:**	Mid Inlet Loading		
Facility:	Chicago, IL	**Time:**	**Start-** 12:15	**End-** 13:00	
Test Location:	Oxidizer Outlet Duct	**Test Engineer:**	JEA		
Test Date:	1/26/2017	**Test Tech:**	LCM		
Pressure, Barometric(Hg"):	29.10	**Meter Calibration (Y):**	1.015		
Delta H:	1.537	**Meter Delta H (dH):**	1.537		
Meter Initial Volume:	52.110	**Initial Wt:**	253.8		
Meter Final Volume:	85.933	**Final Wt:**	260.7		
Meter Temperature:	41.20	**Initial Volume:**	260.0		
Meter Volume dscf:	35.311	**Final Volume:**	330.0		
		Water Vapor in Flue Gas (Bws):	**0.093**		

Project Number:	M170406	**Run Number:**	3		
Client:	East Balt Commissary, LLC	**Operating Level:**	Mid Inlet Loading		
Facility:	Chicago, IL	**Time:**	**Start-** 13:55	**End-** 14:40	
Test Location:	Oxidizer Outlet Duct	**Test Engineer:**	JEA		
Test Date:	1/26/2017	**Test Tech:**	LCM		
Pressure, Barometric(Hg"):	29.10	**Meter Calibration (Y):**	1.015		
Delta H:	1.537	**Meter Delta H (dH):**	1.537		
Meter Initial Volume:	86.148	**Initial Wt:**	253.8		
Meter Final Volume:	120.031	**Final Wt:**	261.2		
Meter Temperature:	41.70	**Initial Volume:**	330.0		
Meter Volume dscf:	35.339	**Final Volume:**	405.0		
		Water Vapor in Flue Gas (Bws):	**0.099**		

© Mostardi Platt

Method 25A Field Data Sheet

Project:	M170406	Operator:	J. Mei
Client:	East Balt Commissary, Inc	Source:	1. Oxidizer Inlet
Location:	Chicago, IL Facility		2. Oxidizer Outlet
Date:	11/27/2017		3. ~~[illegible]~~

MID-HIGH LOAD

Parameters	Location 1	Location 2	Location 3
Test 1	Inlet	outlet	
Time	650-749	650-749	
VOC ppmv as Ethanol	1879.6	4.1	
Air flow, scfm	3433	4760	
VOC lbs/hr as Ethanol	46.07	0.14	
Removal Efficiency, %	99.70%		
Test 2	Inlet	outlet	
Time	840-939	840-939	
VOC ppmv as Ethanol	1586.9	4.4	
Air flow, scfm	3474	4864	
VOC lbs/hr as Ethanol	39.36	0.15	
Removal Efficiency, %	99.62%		
Test 3	Inlet	outlet	
Time	1035-1134	1035-1134	
VOC ppmv as Ethanol	1636.9	7.6	
Air flow, scfm	3462	4804	
VOC lbs/hr as Ethanol	40.46	0.26	
Removal Efficiency, %	99.36%		

© Mostardi Platt

Client: East Balt Commissary, LLC
Facility: Chicago, Illinois
Project #: M170406
Location: Catalytic Oxidizer (Low Inlet Loading)
Date: 1/27/17

Run 1

Time	NMHC ppmv Inlet A	CH4 ppmv Inlet A	NMHC ppmv outlet	CH4 ppmv outlet
6:50	412.72	16.37	6.07	15.83
6:51	413.97	16.41	5.78	14.59
6:52	415.25	16.41	5.76	15.70
6:53	416.48	16.44	5.76	15.62
6:54	417.69	16.40	5.54	15.83
6:55	417.69	16.40	5.60	15.83
6:56	417.71	16.39	3.17	15.83
6:57	418.98	16.36	2.23	14.83
6:58	420.27	16.37	4.59	15.45
6:59	419.12	16.40	5.28	14.95
7:00	418.98	16.39	5.52	15.39
7:01	419.01	16.41	3.69	15.10
7:02	418.98	16.39	3.47	20.59
7:03	419.00	23.50	3.60	21.39
7:04	418.98	21.59	4.55	17.89
7:05	419.00	19.35	5.60	16.50
7:06	419.03	18.14	5.44	15.65
7:07	419.03	16.90	4.14	15.84
7:08	419.84	16.41	2.40	15.80
7:09	420.33	16.39	2.52	15.86
7:10	420.36	16.38	2.47	15.85
7:11	421.63	16.44	2.52	15.84
7:12	422.80	16.40	3.18	15.82
7:13	423.99	16.41	5.00	15.83
7:14	424.86	16.41	2.89	15.86
7:15	424.59	16.38	3.07	15.82
7:16	425.42	16.37	5.23	14.48
7:17	425.80	16.40	5.13	14.50
7:18	426.73	16.40	5.36	14.54
7:19	426.40	16.07	5.12	14.53
7:20	425.42	15.11	2.69	15.86
7:21	425.17	15.34	2.82	15.88
7:22	423.86	16.21	4.84	14.63
7:23	422.93	15.11	5.22	14.57
7:24	424.19	15.26	5.12	14.53
7:25	425.39	16.48	5.22	14.55
7:26	425.41	16.44	3.30	16.65
7:27	426.73	16.46	2.62	15.13
7:28	428.73	16.46	4.63	15.51
7:29	428.68	16.48	3.23	15.87
7:30	426.74	16.43	4.28	15.86
7:31	425.57	15.27	5.08	14.98
7:32	464.37	15.10	3.17	14.49
7:33	502.30	15.13	2.34	15.29
7:34	552.33	15.10	2.49	15.09
7:35	615.48	15.11	2.24	14.52
7:36	794.75	15.08	3.65	14.53
7:37	1227.79	15.07	3.98	14.53
7:38	1283.32	15.08	2.17	14.54
7:39	987.57	15.07	2.41	15.03
7:40	772.02	15.07	2.77	15.37
7:41	712.33	15.07	2.56	14.92
7:42	684.49	15.07	3.12	15.49
7:43	650.63	15.07	5.46	14.83
7:44	621.92	15.07	5.79	15.85
7:45	603.37	15.08	5.40	15.62
7:46	636.64	15.08	3.29	15.67
7:47	716.79	15.10	5.18	14.54
7:48	802.48	15.08	2.52	14.53
7:49	789.73	15.08	5.24	14.53
Average	**522.10**	**16.20**	**4.10**	**15.50**
Min	412.72	15.07	2.17	14.48
Max	1283.32	23.50	6.07	21.39

© Mostardi Platt

If steam is used as a purge medium during unit startup and pressurization, then it is essential that no delays occur before introduction of other pressurized gases. Condensing steam could result in the creation of partial vacuum in the unit or vessel, which could lead to an implosion.

2. ***Hydrocarbon Purge.*** *After the oxygen is safely removed, the inert gas supply is closed and hydrocarbons are introduced to purge out the inert gas to a flare and to pressurize the unit.*

Prior to initiating the hydrocarbon purge, all vents to the atmosphere are closed. This is done to prevent the possible release of unburned hydrocarbons to the atmosphere. Once the vents are closed, hydrocarbons from storage vessels, the fuel gas system, or refinery vapor recovery systems are introduced as a purging medium. The actual hydrocarbon source depends on the individual unit or vessel. Often, because catalysts, metallurgy, or feedstocks are incompatible with high-sulfur content hydrocarbons, relatively clean hydrocarbon streams are used during purging. These relatively clean streams, such as low-sulfur fuel gas, hydrogen gas from refinery hydrogen systems, or a feedstock, result in little sulfur being present in the hydrocarbons that are routed to the flare during purging.

3. ***Flare Vent Closure.*** *Once the inert gases have been purged from the unit, flare vents are closed and the startup procedures continue, typically with little or no further releases to the flare.*

The purge of inert gases is determined to be complete by testing the purge stream leaving the unit for the presence of inert gases or by observation of the flare. Further flaring is undesirable since it results in unnecessary pollution and economic loss. It is important to ensure that unit or vessel vents to the flare system are closed at the completion of purging of inert gases and before the introduction of feedstocks to prevent extremely large flaring events and potential release of liquid feedstocks to the flare.

3.5 Fuel Gas Imbalance

Flaring can occur due to a sudden, short-term imbalance in the flare/fuel gas system. Fuel gas and/or hydrogen systems may be out of balance during a maintenance event or process upset when either a producer or a consumer of fuel gas and/or hydrogen is shut down, leading to excess fuel gas being flared. These imbalances will be mitigated through the shutdown and startup procedure updates discussed in Sections 3.4.1 and 3.4.2, respectively.

3.6 Refinery-Wide Relief System Evaluation

The Robinson Refinery is currently engaged in a multi-year study of and upgrade to its plant-wide pressure relief system. While this study is focused primarily on pressure protection of vessels by identifying and addressing process safety valves (PSVs) with inlet and/or outlet pressure drop issues, PSV "chatter" can be reduced or eliminated. In extreme cases, excessive chatter can lead to PSV failure. Additionally, damage to the disk caused by chatter during a relied scenario could result in a leak after the valve reseats. Piping modifications to eliminate excessive inlet and/or outlet pressure drop could reduce this potential.

The relief system study also identified valves between vessels to car-seal open in order to eliminate some blocked-in relief scenarios. By minimizing the number of circumstances that could potentially cause PSVs to open, exposure to high short-term waste gas rates and the frequency for increased risk of damage to the PSVs is reduced.

A1.0 Description of Streams to the 84F-1, 84F-5, and 84F-6 Flares

Each of the sources listed below are monitored by the GE Ultrasonic Flow meter at the 84F-1, 5, or 6 Flare, depending on which is receiving the vent gas flow, and the Siemens Gas Chromatograph.

A1.1 Crude Unit (Unit 1)

Control Valve	Description
01PV1002	Blanket Gas (valve vents to flare on high pressure) on Transmix Coalescing Surge Drum.
01PV0032	Valve vents to flare on high pressure of Atmospheric Tower.
01PV0240	Valve vents to flare on high pressure of Atmospheric Tower.
01PV0450 (1K-1 failure)	Control Preflash Tower pressure until charge rate has been reduced and/or the Preflash Off Gas can be lined up to 82K-101 of Preflash Reflux Receiver.
01LV207	Slop oil from hotwell
01LV0209	Hotwell offgas to flare due to high pressure on hotwell

Manual Block Valve	Description
1C-10	1st stage desalter
1C-11	2nd stage desalter
1C-14	Debutanizer Overhead Receiver
1C-15	Naphtha Splitter Overhead Receiver
1C-18	Fuel Gas KO Drum
1C-30	1K-1 1st Stage Discharge Drum
1C-31	1K-1 Intersatge KO Drum
1C-32	1K-1 2nd Stage Discharge Drum

Compressor	Description

1K-1	Preflash Off Gas Compressor. Continuous nitrogen purge seal.

Analyzer	Description
01AI0050	Crude unit fuel gas analyzer

Truck Unloading	Description
Ammonia unloading lines at US-276 (1C-102)	Lines are vented to flare to de-pressure unloading lines after unloading ammonia to allow for unloading hose removal.

Turnaround Document	Description
105.3828	Transmix Startup from Turnaround
105.1025	Amine Scrubber Startup from Turnaround
105.5114	Kerosene Treaters Startup from Turnaround
105.1003	Crude Unit Startup from Turnaround
105.1046	Amine Scrubber Shutdown for Turnaround
105.3831	Transmix Shutdown for Turnaround
105.5086	Kerosene Treater Shutdown for Turnaround
105.1044	Crude Unit Shutdown for Turnaround

Relief Valve Count	38
Sampling System Count	2

A1.2 Ultrafiner (Unit 2)

Control Valve	Description
02PV0021	Valve vents to flare on high pressure on High Pressure Separator.

Manual Block Valve	Description
2C-8	Fuel Gas KO Drum (manual vent to flare to de-inventory level).
2C-18	Fuel Gas KO Drum (manual vent to flare to de-inventory level).
2E-1A-F	2E-1A-F -- 3" Vent to flare off ejector inlet.

Split Range	Description
2PC-201	02PV-210B Valve vents to flare on high pressure from Naphtha Feed Surge Drum.

Vessel	Description
2C-1	Fuel gas blanketed system.

Turnaround Document	Description
105.1040	Ultrafiner Startup from Turnaround
105.1052	Ultrafiner Shutdown for Turnaround

Relief Valve Count	15
Sampling System Count	4

A1.3 Ultraformer (Unit 3)

Control Valve	Description
02PV-215	Valve vents to flare on high pressure from Fuel Gas KO Drum.
03PV-0517	Valve vents to flare on high pressure to refinery 600# mixed hydrogen header from Discharge KO Drum.
03PV-0050	Reactor de-pressure to flare. Used regularly as per procedure.
03PV-0180	Regeneration gas pressure control. Used regularly as per procedure.

Manual Block Valve	Description
3C-25	Fuel Gas KO Drum (manual vent to flare to de-inventory level).
MOV-11 Vent	3C-1 Process Inlet
MOV-13 Vent	3C-1 Process Outlet
MOV-15 Vent	3C-1 Regen Header on Inlet
MOV-17 Vent	3C-1 Regen Header on Outlet
MOV-21 Vent	3C-2 Process Inlet
MOV-23 Vent	3C-2 Process Outlet
MOV-25 Vent	3C-2 Regen Header on Inlet
MOV-27 Vent	3C-2 Regen Header on Outlet
MOV-31 Vent	3C-3 Process Inlet
MOV-33 Vent	3C-3 Process Outlet
MOV-35 Vent	3C-3 Regen Header on Inlet
MOV-37 Vent	3C-3 Regen Header on Outlet
MOV-41 Vent	3C-4 Process Inlet
MOV-43 Vent	3C-4 Process Outlet

MOV-45 Vent	3C-4 Regen Header on Inlet
MOV-47 Vent	3C-4 Regen Header on Outlet
MOV-52 Vent	3C-5 Swing Header on Inlet
MOV-53 Vent	3C-5 Swing Header on Outlet
MOV-55 Vent	3C-5 Regen Header on Inlet
MOV-57 Vent	3C-5 Regen Header on Outlet
Vent	Regen Gas 3MOV-62/3MOV-61& 63
Vent	From Hot H2 Purge Line into Lower Regen Header (H2/Regen Gas 3MOV-66/3MOV-67)
MOV-71 Vent	Lower Regen Header

Split Range	Description
02PV-0041	Vents to fuel gas to control Plant 3 unit pressure increase up valve limits from Ultraformer New Gas Chloride Scrubber.
02PV-0040	Vents to flare on high Plant 3 pressure from Ultraformer Net Gas Chloride Scrubber.

Compressor	Description
3K-5B	Ultraformer Net Gas Compressor. Continuous nitrogen purge seal.
3K-5A	Ultraformer Net Gas Compressor. Continuous nitrogen purge seal.

Analyzer	Description
03AI0030	Recycle gas moisture analyzer

Turnaround Document	Description
105.1034	Ultraformer Startup from Turnaround
105.1050	Ultraformer Shutdown for Turnaround

Pump Seal Count	2
Relief Valve Count	30
Sampling System Count	2

A1.4 Unicracker (Unit 4)

Manual Block Valve	Description
4C-10	Splitter Overhead Reciever. By-pass around 4PSV-40.
4C-13	BT Overhead Receiver. By-pass around4PSV-43.
04HV-0090	100# Depressuring Valve opened only during upset.
04HV-0080	300# Depressuring Valve opened only during upset.
4G-10	Ammonia Injection pump discharge only used during catalyst activation / unit startup.
4K-1	Discharge line drain at XV50010 only used during compressor shutdown and startup.
4C-22A	4K-2A booster suction bottle drain only used during compressor shutdown and startup.
4C-23A	4K-2A booster discharge line drain only used during compressor shutdown and startup.
4C-31A	4K-2A feed gas suction bottle drain only used during compressor shutdown and startup.
4C-31B	4K-2B feed gas suction bottle drain only used during compressor shutdown and startup.
4C-27A	4K-2A 2nd stage makeup discharge line drain only used during compressor shutdown and startup.
4C-27B	4K-2B 2nd stage makeup discharge line drain only used during compressor shutdown and startup.
4C-22B	4K-2B booster suction bottle drain only used during compressor shutdown and startup.
4C-23B	4K-2B booster discharge line drain only used during compressor shutdown and startup.
4C-3	Downstream of 04FV-0150 only used during unit shutdown and startup.

4C-4	Downstream of 04PV-0080 only used during unit shutdown and startup.

Split Range	Description
04PV-201B	Vents fuel gas to flare on high 4C-11 Feed Surge Drum pressure

Vessel	Description
4C-1	Methanator KO Drum or Recip KO
4C-30	Fuel Gas KO Drum

Compressor	Description
4K-1	Recycle Gas Compressor. Only vents to flare if primary seal is leaking.
4K-2A	Hydro. Makeup & Booster Comp. (North) Continuous nitrogen purge seal.
4K-2B	Hydro Makeup & Booster Comp. (South) Continuous nitrogen purge seal.

Turnaround Document	Description
105.1241	Unicracker Shutdown For Turnaround
105.1238	Unicracker Shutdown to Standby
105.1240.	BT Tower Shutdown to Standby
105.1239	BT Tower Shutdown For Turnaround

Relief Valve Count	45

Sampling System Count	2

A1.5 HF Alkylation (Unit 7)

Manual Block Valve	Description
7C3	Iso Overhead Receiver.

Split Range	Description
07LC0070	7C7 Depropanizer Overhead Receiver.

Vessel	Description
7C-21	Alkylate KOH Treater
7C-46	Propane KOH Treater Drain Pot
7C44	Relief Gas Scrubber

Flare Sweep	Description
7FO-526	Natural Gas
7FO-551	Natural Gas

Truck Unloading	Description
Nitrogen and Fuel Gas	Vented to flare from 7C-13 during unloading.

Turnaround Document	Description

105.4319	7F-1 Startup
105.668	Plant 7 Startup from Turnaround
105.724	HF Alkylation Unit Shutdown for Turnaround
105.725	Acid Storage Drum Shutdown

Pump Seal Count	8
Relief Valve Count	31
Sampling System Count	4

A1.6 #1 Sats Gas (Unit 8)

Vessel	Description
8C-12	Blowdown Drum

Turnaround Document	Description
105.734	Plant 8 Startup from Turnaround
105.752	Plant 8 Shutdown for Turnaround

Relief Valve Count	10
Sampling System Count	1

A1.7 LPG Merox Treaters (Unit 11)

Vessel	Description
11C-42	Vent Tank, when flame arresotrs plug
11C-41	Disulfide Seperator Vent Gas, when bypassing 11C-42

Turnaround Document	Description
105.745	Plant 11 Butane Treater Startup
105.746	Plant 11 Merox Caustic Section Startup
105.747	Plant 11 Olefin Treater Startup
105.748	Plant 11 Propane Treater Startup
105.765	Plant 11 Butane Treater Shutdown
105.766	Plant 11 Merox Caustic Section Shutdown
105.767	Plant 11 Olefin Treater Shutdown
105.768	Plant 11 Propane Treater Shutdown

Relief Valve Count	21
Sampling System Count	1

A1.8 Naphtha Hydrotreater/Platformer (Unit 16)

Manual Block Valve	Description
16C-43	Fuel Gas KO Drum drain to flare.
16C-61	North End Fuel Gas KO Drum drain to flare.
16K-1A	Suction Bottle Drain Line East Cylinder.
16K-1A	Suction Bottle Drain Line West Cylinder.
16K-1A	Discharge Vent.
16K-1B	Suction Bottle Drain Line East Cylinder.
16K-1B	Suction Bottle Drain Line West Cylinder.
16K-1B	Discharge Vent.
16K-3A	Suction Bottle Drain Line 2nd Stage.
16K-3B	Suction Bottle Drain Line 2nd Stage.
16HV-0020	16C-4 Hydrotreater Product Separator Dump Valve.
16C-4	16C-4 Hydrotreater Product Separator vent to flare.
16C-6	Flash Drum vent to flare.
16C-7	Stripper Overhead Reciever Vent
16C-72A/B	Upstream and Downstream Vents
16Y-22	Recycle Gas Coalescer Vent to flare
16C-36	Pressure Control to 16C-36.

Split Range	Description
16PC-1310	NHT Charge Drum. SOUR.
16PC-0562/16FI-0580	Platformer H2 to flare from Product Separator 16C-10.

16PC-0540	Platformer H2 to flare from Chloride Scrubber16C-72.
16XV-0949	Catalyst Hopper 16C-28 Vent
16XV-0909	Catalyst Hopper 16C-23 Vent

Compressor	Description
16K-2	Recycle Gas Compressor. Only vents to flare if primary seal is leaking.
16K-1A	Recycle Gas Compressor. Continuous nitrogen purge seal.
16K-3B	Net Gas Compressor. Continuous nitrogen purge seal.
16K-3A	Net Gas Compressor. Continuous nitrogen purge seal.
16K-1B	Recycle Gas Compressor. Continuous nitrogen purge seal.
16K-14	NHT Stripper O/H Gas Compressor. Continuous nitrogen purge seal.

Turnaround Document	Description
105.11	Platformer Startup
105.15	Platformer Startup
105.16	Platformer Shutdown
105.28	Platformer Shutdown

Pump Seal Count	2
Relief Valve Count	33
Sampling System Count	4

A1.9 Tank Farm (Unit 21)

Truck Unloading	Description
LPG Railcar Loading/Unloading Rack	Liquid and vapor lines vent to flares.

Turnaround Document	Description
105.681	Propane Guard Bed Change Out 21C-54A/B
105.682	Propylene Guard Bed Change Out 21C-54A/B

Pump Seal Count	2
Relief Valve Count	2
Sampling System Count	2

A1.10 #2 Sats Gas (Unit 23)

Control Valve	Description
23PCV-200	23C-22/23, during dryer regen

Turnaround Document	Description
105.806	Plant 23 Butane Treater Startup
105.808	Plant 23 Propane Treater Startup
105.810	Plant 23 Startup from Turnaround
105.774	Plant 23 Butane Treater Shutdown

105.776	Plant 23 Propane Treater Shutdown
105.778	Plant 23 Shutdown for Turnaround

Relief Valve Count	22

A1.11 Benzene Extraction Unit (Unit 42)

Control Valve	Description
42PC-1012	Reformate Feed Surge Drum Vent and Bypass
42PC-1420	Splitter Ovhd Receiver Vent and Bypass
42PC-2412	Extractor Surge Drum Vent and Bypass
42PC-4102	Clay Treater Charge Drum Vent and Bypass

Manual Block Valve	Description
42HC-4590	Benzene Column Ovhd Receiver Vent and Bypass
42C-29	Fuel Gas KO Drum Liquid Drain

Vessel	Description
42C-16	Stripper O/H Receiver Vent
42 E-40	NH3 Vaporizer
42D-1	Sulfolane Sump
42D-6	Benzene Sump

Truck Unloading	Description
NH3 Unloading	Liquid/Vapor unloading lines

Flare Sweep	Description
42FI503	Natural Gas
42FI504	Natural Gas

Turnaround Document	Description
105.6307	Unit 42 Start Up
105.6202	Extractor Isolation and Cleanup
105.6211	Solvent Regenerator Shutdown
105.6312	Unit 42 Shutdown for Maintenance and Turnaround

Relief Valve Count	31
Sampling System Count	2

A1.12 Diesel/LCO Hydrotreater (Unit 69)

Split Range	Description
69PV-0441	Fractionator Overhead Receiver.
69PV-0052	Feed Surge Drum.

Manual Block Valves	Description
69C-8	Unit Depressuring Valve, 69HV-0620. Sour
69C-35	69K-3 1st Stage Discharge Pulsation Dampner Drain.
69C-37	69K-3 2nd Stage Discharge Pulsation Dampner Drain.

Analyzer	Description
69AI-0231	Online Hydrogen Purity Analyzer.

Compressor	Description
69K-1	Compressor Seal Gas.

Flare Sweep	Description
69FO-512	Continuous Fuel Gas Sweep (orifice).
69FO-514	Continuous Fuel Gas Sweep (orifice).
69FO-515	Continuous Fuel Gas Sweep (orifice).

Turnaround Document	Description
105.184	DHT Shutdown to TAR
105.182	DHT Startup from TAR
105.158	Hydrogen Membrane Startup from Shutdown
105.157	Hydrogen Membrane Shutdown to TAR

Relief Valve Count	23
Sampling System Count	2

A1.13 MTBE (Unit 71)

Turnaround Document	Description
105.816	Plant 71 Startup from Turnaround

105.78	Plant 71 Shutdown for Turnaround

Pump Seal Count	6
Relief Valve Count	10

A1.14 Fluidized Catalytic Cracking Unit (Unit 82)

Split Range	Description
82PC1080	Main Column T-4.

Vessel	Description
60C-2	Fuel Gas KO Pots at CO Boiler. Does not rely on flare header pressure.
82C-27-82F2	Fuel Gas KO Pot. Does not rely on flare header pressure.

Compressor	Description
82K-101	Wet Gas Compressor. Only vents to flare if primary seal is leaking.

Flare Sweep	Description
82FI204	Natural Gas
82FI206	Natural Gas

Truck Unloading	Description
Ammonia unloading	Lines are vented to flare to de-pressure unloading lines after unloading ammonia to allow for unloading hose removal.

Turnaround Document	Description
105.534	FCCU Startup from Emergency Shutdown
105.54	FCCU Shutdown to Standby
105.4871	SNCR Air Free and Start Up

Pump Seal Count	4
Relief Valve Count	21
Sampling System Count	2

A2.0 Revision and Review Record

Table A2.0: FMP Revision and Review Record

Name of Reviewer	Reviewer's Position	Date of Review &/or Revision	Resubmittal Required (Y/N)?	Comment(s)

Wood River Refinery
P. O. Box 76
900 South Central Avenue
Roxana, Illinois 62084

Brian Wulf
Director - Environmental

March 20, 2017

CERTIFIED MAIL
RETURN RECEIPT REQUESTED

080-EDR-17
Certified #0143

Mr. George Czerniak, Chief
Air Enforcement and Compliance Assurance Branch
U.S. Environmental Protection Agency Region V
77 West Jackson Boulevard
Chicago, IL 60604

RECEIVED
MAR 28 2017
AIR ENFORCEMENT BRANCH
U.S. EPA REGION 5

SUBJECT: WRB Refining LP Wood River Refinery
NSPS Subpart Ja Alternative Monitoring Plan Application
Maintenance Degassing Thermal Oxidizer

Dear Mr. Czerniak:

WRB Refining LP (WRB) owns the Wood River Refinery (WRR) located in Hartford and Roxana, Illinois. Phillips 66 Company (Phillips) operates the facility. The WRR is a major source pursuant to Title V of the Clean Air Act and currently operates under CAAPP Permit 95120306 (CAAPP Permit).

Each year, a number of storage tanks and process vessels at the WRR are removed from service, de-inventoried, and cleaned in preparation for maintenance and/or inspection. Phillips proposes a change in the tank and vessel cleaning procedure that will reduce slop oil and wastewater generation by reducing or eliminating gas oil, chemical, and water rinsing to remove residual hydrocarbon liquids and vapors prior to opening equipment to atmosphere. In place of gas oil and water rinses, Phillips proposes controlling volatile organic material (VOM) vapors from temporary vapor control events such as tank and vessel degassing using a mobile thermal oxidizer, adding a scrubber as needed to control H_2S.

Using a maintenance contractor, Phillips cleans seven or fewer tanks each year with each tank degassing event lasting less than seven days. Phillips may also use a larger thermal oxidizer(s) for up to four weeks per year for process unit clearing prior to major maintenance shutdowns. Phillips has applied to the Illinois Environmental Protection Agency (Illinois EPA) for a CAAPP construction permit authorizing maintenance contractors to periodically install and operate mobile thermal oxidizers and scrubbers to control vapors generated during tank and process unit cleaning at the refinery.

The thermal oxidizer is a fuel gas combustion device (FGCD) subject to New Source Performance Standards for Petroleum Refineries, Title 40 Part 60, Subpart Ja. The affected FGCD (thermal oxidizer) is contractor-provided mobile equipment that is operated for a short period on an infrequent basis making it impractical and infeasible to perform the continuous monitoring required by 40 CFR 60.107a(a)(1)-(2).

Therefore, Phillips is submitting this application for an Alternative Monitoring Plan (AMP) as provided by 40 CFR 60.13(i)(2) to obtain US EPA approval for testing thermal oxidizer inlet grab samples for H_2S using colorimetric tubes or a hand held device in lieu of continuous emission monitoring. Phillips proposes using the monitoring procedure previously approved by US EPA Region 5 for refinery vapor control events using a thermal oxidizer. (See the attached letter from Sara Breneman, Region 5 Air Enforcement and Compliance Chief, to Chris Longo, GEM Mobile Treatment Services.)

40 CFR 60.107a(a)(3)(ii) exempts fuel gas streams "that meet a commercial-grade product specification for sulfur content of 30 ppm_v or less." Phillips may elect to submit commercial product specifications demonstrating the material stored in certain tanks qualifies for this monitoring exemption. The proposed AMP will be followed unless US EPA has provided written agreement that a tank qualifies for exemption as a low sulfur product.

If you have any questions or concerns regarding this request, please contact Dana French at (618) 255-2418.

Sincerely,

Brian Wulf
Director - Environmental

Attachment

Client: East Balt Commissary, LLC
Facility: Chicago, Illinois
Project #: M170406
Location: Catalytic Oxidizer (Low Inlet Loading)
Date: 1/27/17

Run 2

Time	NMHC ppmv Inlet A	CH4 ppmv Inlet A	NMHC ppmv outlet	CH4 ppmv outlet
8:40	381.79	16.38	3.67	15.56
8:41	385.22	16.38	2.95	14.83
8:42	388.53	16.38	2.95	14.51
8:43	390.75	16.44	3.31	15.45
8:44	392.66	16.41	3.55	15.84
8:45	395.18	16.41	5.52	15.86
8:46	397.73	16.42	6.72	15.05
8:47	400.22	16.42	4.63	15.27
8:48	402.65	16.42	5.16	15.85
8:49	404.70	16.43	7.04	15.84
8:50	405.95	16.43	5.51	15.85
8:51	407.20	16.41	3.62	15.85
8:52	408.45	16.39	3.18	15.87
8:53	409.49	16.43	2.99	15.36
8:54	409.72	16.39	2.99	14.48
8:55	410.76	16.16	2.81	14.48
8:56	410.77	15.12	2.82	14.48
8:57	410.94	15.15	2.93	14.81
8:58	412.52	15.14	3.33	15.82
8:59	413.71	15.15	3.23	15.56
9:00	413.70	15.14	3.21	14.49
9:01	413.73	15.15	6.20	14.49
9:02	413.70	15.10	2.94	14.49
9:03	413.72	15.11	6.46	14.48
9:04	414.95	15.06	6.59	14.47
9:05	416.14	15.03	3.46	15.60
9:06	417.44	16.05	3.95	15.78
9:07	417.67	16.27	7.38	15.78
9:08	418.65	16.30	7.74	15.84
9:09	419.94	16.32	8.11	15.84
9:10	420.30	16.33	7.82	14.75
9:11	421.14	16.31	7.65	14.49
9:12	422.30	16.35	4.92	15.54
9:13	423.49	16.36	4.00	14.87
9:14	424.76	16.38	6.16	14.55
9:15	426.03	16.36	7.19	14.55
9:16	427.92	16.39	7.16	14.51
9:17	429.81	16.39	4.84	14.52
9:18	431.10	16.38	3.26	14.51
9:19	431.85	16.38	3.61	15.21
9:20	432.27	16.36	4.09	15.14
9:21	433.39	16.40	3.81	14.53
9:22	434.68	16.44	3.33	15.10
9:23	435.96	16.43	3.28	15.85
9:24	437.20	16.39	3.20	15.36
9:25	460.57	16.42	3.21	14.54
9:26	545.97	16.39	3.20	14.91
9:27	523.30	16.41	3.31	15.86
9:28	502.87	16.42	3.62	15.85
9:29	492.70	16.38	3.58	15.82
9:30	498.95	16.43	2.96	15.85
9:31	502.66	16.35	3.07	15.78
9:32	500.09	16.37	3.09	15.81
9:33	496.30	15.14	3.19	15.84
9:34	491.33	15.16	3.08	15.85
9:35	665.05	16.26	3.20	15.84
9:36	597.74	16.36	7.10	15.85
9:37	542.71	16.36	3.46	15.81
9:38	510.10	16.35	6.74	15.82
9:39	488.89	16.36	3.47	15.84
Average	**440.80**	**16.10**	**4.40**	**15.30**
Min	381.79	15.03	2.81	14.47
Max	665.05	16.44	8.11	15.87

© Mostardi Platt

Client: East Balt Commissary, LLC
Facility: Chicago, Illinois
Project #: M170406
Location: Catalytic Oxidizer (Low Inlet Loading)
Date: 1/27/17

Run 3

Time	NMHC ppmv Inlet A	CH4 ppmv Inlet A	NMHC ppmv outlet	CH4 ppmv outlet
10:35	321.72	16.33	7.25	15.32
10:36	325.60	16.32	6.15	15.82
10:37	331.11	16.32	4.67	16.53
10:38	334.87	16.32	5.18	17.11
10:39	338.62	16.33	7.28	16.46
10:40	342.45	16.35	9.82	15.80
10:41	346.23	16.38	10.25	15.82
10:42	349.98	16.34	10.68	15.82
10:43	352.76	16.34	10.81	15.78
10:44	356.26	16.31	10.92	15.79
10:45	359.14	16.28	11.88	15.76
10:46	361.66	17.19	11.65	15.43
10:47	363.26	16.72	11.10	14.44
10:48	363.70	16.22	11.53	14.44
10:49	364.51	16.20	11.70	14.41
10:50	365.11	16.21	11.50	14.43
10:51	365.77	16.22	11.68	14.42
10:52	367.03	16.24	12.42	14.45
10:53	368.86	16.20	11.99	14.44
10:54	371.39	16.22	11.38	14.50
10:55	373.96	16.24	11.38	14.52
10:56	376.00	16.21	10.76	14.46
10:57	377.69	16.23	5.69	14.42
10:58	380.63	18.84	5.12	14.47
10:59	383.86	23.75	6.91	16.76
11:00	385.37	18.91	6.39	16.06
11:01	387.69	18.63	5.55	15.74
11:02	390.63	17.55	5.07	15.79
11:03	394.04	17.51	4.98	15.80
11:04	395.23	17.51	4.89	15.76
11:05	396.49	17.46	8.10	14.93
11:06	398.57	16.22	7.32	15.30
11:07	399.13	16.20	5.60	15.78
11:08	401.53	16.22	7.82	15.08
11:09	404.12	16.23	9.65	15.15
11:10	407.82	16.25	7.06	15.81
11:11	409.31	16.28	4.34	15.22
11:12	412.03	16.30	4.40	15.05
11:13	413.48	16.26	4.98	15.78
11:14	414.80	16.25	5.31	15.78
11:15	417.04	16.24	4.43	15.83
11:16	426.00	16.25	4.38	15.83
11:17	433.61	16.22	4.47	15.82
11:18	598.07	16.26	4.61	16.32
11:19	604.39	18.70	4.99	17.82
11:20	529.41	19.45	4.63	16.04
11:21	500.40	18.24	5.50	17.02
11:22	488.24	17.64	5.38	15.82
11:23	727.37	16.95	4.35	15.81
11:24	966.98	16.23	9.34	15.79
11:25	899.30	16.25	9.97	15.83
11:26	802.56	16.19	9.59	14.51
11:27	726.11	16.16	9.70	14.49
11:28	670.19	16.21	5.61	15.70
11:29	626.85	16.21	5.12	14.66
11:30	599.54	16.19	4.45	14.48
11:31	595.01	16.26	4.55	14.50
11:32	582.27	16.27	8.60	14.51
11:33	567.31	16.25	9.81	14.51
11:34	572.61	16.21	7.05	15.45
Average	**454.70**	**16.80**	**7.60**	**15.40**
Min	321.72	16.16	4.34	14.41
Max	966.98	23.75	12.42	17.82

© Mostardi Platt

East Bait Commissary, LLC
Chicago, IL
Oxidizer Inlet Duct
Volumetric Flow Data - Low Inlet Loading

Test Run	Test Date	Pre Flow SCFM	Post Flow SCFM	Average Reference Method Flow SCFM
Pre 1/Post 1	01/27/17	3,432	3,461	3,446
Pre 2/Post 2	01/27/17	3,461	3,514	3,487
Pre 3/Post 3	01/27/17	3,514	3,437	3,475

© Mostardi Platt

Client:	East Balt Commissary, LLC	
Facility:	Chicago, IL	
Test Location:	Oxidizer Inlet Duct	
Project #:	M170406	
Test Method:	2 (Compliance)	
Test Engineer:	JEA	
Test Technician:	JRK	
Type of Fuel Firing:	Natural Gas	
Temp ID:	CM 6	
Meter ID:	CM 6	
Pitot ID:	80	
Pitot Type:	S-Type	
Pitot Tube Coefficient:	0.840	
Probe Length:	5.0	**ft**
Sample Plane:	Horizontal	
Port Length:	2.00	**in.**
Port Size (diameter):	4.00	**in.**
Port Type:	Nipple	
Duct Shape:	Circular	
Diameter:	1.833333333	**ft**
Duct Area:	2.64	**Sq. Ft.**
Upstream Diameters:	73"	
Downstream Diameters:	81"	
Number of Ports Sampled:	2	
Number of Points per Port:	8	
Total Number of Traverse Points:	16	
Operating Level:	Low	

© Mostardi Platt

METHOD 2 VOLUMETRIC FLOW DATA

Project Number:	M170406	**Operating Level:**	Low Inlet Loading		
Client:	East Balt Commissary, LLC	**Run No.:**	Pre 1		
Facility:	Chicago, IL	**Test Date:**	1/27/2017		
Test Location:	Oxidizer Inlet Duct	**Start Time:**	7:02		
Pitot ID:	80	**End Time:**	7:11		
Pitot Coefficient:	0.840	**Test Engineer:**	JEA	**Test Tech:**	LCM
Probe Length, Feet:	5	**Port Length, Inches:**	2		

Port	Point	DP (in. H_2O)	Sqrt. DP	Temp (°F)	Velocity (V)	Port	Point	DP (in. H_2O)	Sqrt. DP	Temp (°F)	Velocity (V)
A	1	0.32	0.5657	319.0	40.22	B	1	0.36	0.6000	322.0	42.74
A	2	0.34	0.5831	318.0	41.43	B	2	0.32	0.5657	320.0	40.24
A	3	0.36	0.6000	316.0	42.57	B	3	0.27	0.5196	318.0	36.92
A	4	0.25	0.5000	315.0	35.45	B	4	0.16	0.4000	316.0	28.42
A	5	0.15	0.3873	314.0	27.44	B	5	0.19	0.4359	316.0	30.93
A	6	0.13	0.3606	312.0	25.52	B	6	0.17	0.4123	314.0	29.22
A	7	0.10	0.3162	311.0	22.37	B	7	0.15	0.3873	312.0	27.41
A	8	0.16	0.4000	311.0	28.29	B	8	0.12	0.3464	311.0	24.50

Test Parameters

P_{bar} - Barometric pressure, inches Hg	29.20	% CO_2	0.50
P_g - Stack Pressure, inches of H_2O	-1.40	% O_2	19.50
P_s - Absolute stack pressure, inches Hg	29.10	% N_2	80.00
t_s - Average stack temperature, °F	315.4	Md - dry basis lb/lb mole	28.86
Duct Shape:	Circular	Ms - wet basis lb/lb mole	27.318
Diameter, Feet	1.83333333		
		Bws - Moisture content fraction	**0.142**
Cross Sectional Area of Stack, Ft^2	2.64	Moisture determined by wb/db?	N

Method 2 Results

Average DP	0.2219	Q - ACFM	5,182
Average Sqrt DP	0.4613	Qsd - DSCFM	2,944
Average Velocity Vs (ft/sec)	32.716	Qs - SCFM	3,432
		Qs - SCFH	205,893

© Mostardi Platt

METHOD 2 VOLUMETRIC FLOW DATA

Project Number:	M170406	**Operating Level:**	Low Inlet Loading		
Client:	East Balt Commissary, LLC	**Run No.:**	Post 1/Pre 2		
Facility:	Chicago, IL	**Test Date:**	1/27/2017		
Test Location:	Oxidizer Inlet Duct	**Start Time:**	7:48		
Pitot ID:	80	**End Time:**	7:55		
Pitot Coefficient:	0.840	**Test Engineer:**	JEA	**Test Tech:**	JRK
Probe Length, Feet:	5	**Port Length, Inches:**	2		

Port	Point	DP (In. H_2O)	Sqrt. DP	Temp (°F)	Velocity (V)	Port	Point	DP (In. H_2O)	Sqrt. DP	Temp (°F)	Velocity (V)
A	1	0.31	0.5568	321.0	39.63	B	1	0.38	0.6164	321.0	43.88
A	2	0.35	0.5916	320.0	42.09	B	2	0.33	0.5745	320.0	40.86
A	3	0.37	0.6083	319.0	43.24	B	3	0.26	0.5099	319.0	36.25
A	4	0.28	0.5292	319.0	37.62	B	4	0.15	0.3873	318.0	27.52
A	5	0.17	0.4123	318.0	29.29	B	5	0.18	0.4243	317.0	30.12
A	6	0.15	0.3873	317.0	27.50	B	6	0.17	0.4123	315.0	29.24
A	7	0.13	0.3606	312.0	25.52	B	7	0.14	0.3742	312.0	26.48
A	8	0.14	0.3742	310.0	26.45	B	8	0.11	0.3317	311.0	23.46

Test Parameters

P_{bar} - Barometric pressure, inches Hg	29.20	% CO_2	0.50
P_g - Stack Pressure, inches of H_2O	-1.40	% O_2	19.50
P_s - Absolute stack pressure, inches Hg	29.10	% N_2	80.00
t_s - Average stack temperature, °F	316.8	Md - dry basis lb/lb mole	28.86
Duct Shape:	Circular	Ms - wet basis lb/lb mole	27.318
Diameter, Feet	1.83333333		
		Bws - Moisture content fraction	**0.142**
Cross Sectional Area of Stack, Ft^2	2.64	Moisture determined by wb/db?	N

Method 2 Results

Average DP	0.2263	Q - ACFM	5,236
Average Sqrt DP	0.4657	Qsd - DSCFM	2,970
Average Velocity Vs (ft/sec)	33.058	Qs - SCFM	3,461
		Qs - SCFH	207,678

© Mostardi Platt

METHOD 2 VOLUMETRIC FLOW DATA

Project Number:	M170406	**Operating Level:**	Low Inlet Loading		
Client:	East Balt Commissary, LLC	**Run No.:**	Post 2/Pre 3		
Facility:	Chicago, IL	**Test Date:**	1/27/2017		
Test Location:	Oxidizer Inlet Duct	**Start Time:**	9:42		
Pitot ID:	80	**End Time:**	9:48		
Pitot Coefficient:	0.840	**Test Engineer:**	JEA	**Test Tech:**	JRK
Probe Length, Feet:	5	**Port Length, Inches:**	2		

Port	Point	DP (In. H_2O)	Sqrt. DP	Temp (°F)	Velocity (V)	Port	Point	DP (In. H_2O)	Sqrt. DP	Temp (°F)	Velocity (V)
A	1	0.33	0.5745	323.0	40.99	B	1	0.41	0.6403	328.0	45.84
A	2	0.37	0.6083	321.0	43.35	B	2	0.36	0.6000	326.0	42.90
A	3	0.39	0.6245	320.0	44.48	B	3	0.29	0.5385	324.0	38.45
A	4	0.31	0.5566	318.0	39.60	B	4	0.17	0.4123	324.0	29.44
A	5	0.18	0.4243	317.0	30.16	B	5	0.16	0.4000	321.0	28.51
A	6	0.16	0.4000	316.0	28.42	B	6	0.14	0.3742	317.0	26.60
A	7	0.14	0.3742	315.0	26.56	B	7	0.13	0.3606	315.0	25.60
A	8	0.11	0.3317	312.0	23.50	B	8	0.12	0.3464	312.0	24.55

Test Parameters

P_{bar} - Barometric pressure, inches Hg	29.20	% CO_2	0.50
P_g - Stack Pressure, inches of H_2O	-1.40	% O_2	19.50
P_s - Absolute stack pressure, inches Hg	29.10	% N_2	80.00
t_s - Average stack temperature, °F	319.3	Md - dry basis lb/lb mole	28.86
Duct Shape:	Circular	Ms - wet basis lb/lb mole	27.253
Diameter, Feet	1.83333333		
		Bws - Moisture content fraction	0.148
Cross Sectional Area of Stack, Ft^2	2.64	Moisture determined by wb/db?	N

Method 2 Results

Average DP	0.2356	Q - ACFM	5,333
Average Sqrt DP	0.4729	Qsd - DSCFM	2,994
Average Velocity Vs (ft/sec)	33.666	Qs - SCFM	3,514
		Qs - SCFH	210,817

© Mostardi Platt

METHOD 2 VOLUMETRIC FLOW DATA

Project Number:	M170406	**Operating Level:**	Low Inlet Loading		
Client:	East Balt Commissary, LLC	**Run No.:**	Post 3/Pre 4		
Facility:	Chicago, IL	**Test Date:**	1/27/2017		
Test Location:	Oxidizer Inlet Duct	**Start Time:**	11:38		
Pitot ID:	80	**End Time:**	11:42		
Pitot Coefficient:	0.840	**Test Engineer:**	JEA	**Test Tech:**	JRK
Probe Length, Feet:	5	**Port Length, Inches:**	2		

Port	Point	DP (In. H_2O)	Sqrt. DP	Temp (°F)	Velocity (V)	Port	Point	DP (In. H_2O)	Sqrt. DP	Temp (°F)	Velocity (V)
A	1	0.30	0.5477	325.0	39.10	B	1	0.44	0.6633	331.0	47.54
A	2	0.39	0.6245	321.0	44.47	B	2	0.35	0.5916	330.0	42.37
A	3	0.33	0.5745	320.0	40.88	B	3	0.29	0.5385	325.0	38.45
A	4	0.30	0.5477	319.0	38.95	B	4	0.18	0.4243	322.0	30.23
A	5	0.18	0.4243	315.0	30.10	B	5	0.15	0.3873	320.0	27.56
A	6	0.17	0.4123	314.0	29.23	B	6	0.13	0.3606	318.0	25.63
A	7	0.12	0.3464	312.0	24.53	B	7	0.11	0.3317	313.0	23.50
A	8	0.10	0.3162	311.0	22.37	B	8	0.10	0.3162	310.0	22.36

Test Parameters

P_{bar} - Barometric pressure, inches Hg	29.20	% CO_2	0.50
P_g - Stack Pressure, inches of H_2O	-1.40	% O_2	19.50
P_s - Absolute stack pressure, inches Hg	29.10	% N_2	80.00
t_s - Average stack temperature, °F	319.1	Md - dry basis lb/lb mole	28.86
Duct Shape:	Circular	Ms - wet basis lb/lb mole	27.296
Diameter, Feet	1.83333333		
		Bws - Moisture content fraction	**0.144**
Cross Sectional Area of Stack, Ft^2	2.64	Moisture determined by wb/db?	N

Method 2 Results

Average DP	0.2275	Q - ACFM	5,216
Average Sqrt DP	0.4629	Qsd - DSCFM	2,942
Average Velocity Vs (ft/sec)	32.927	Qs - SCFM	3,437
		Qs - SCFH	206,239

© Mostardi Platt

METHOD 4 MOISTURE DETERMINATION

Project Number:	M170406	**Run Number:**		1	
Client:	East Balt Commissary, LLC	**Operating Level:**		Low Inlet Loading	
Facility:	Chicago, IL	**Time:**	**Start-**	6:50	**End-** 7:35
Test Location:	Oxidizer Inlet Duct	**Test Engineer:**		JEA	
Test Date:	1/27/2017	**Test Tech:**		JRK	

Pressure, Barometric(Hg"):	29.20	**Meter Calibration (Y):**	0.993
Delta H:	1.610	**Meter Delta H (dH):**	1.610
Meter Initial Volume:	80.980	**Initial Wt:**	238.5
Meter Final Volume:	114.861	**Final Wt:**	246.9
Meter Temperature:	34.45	**Initial Volume:**	200.0
Meter Volume dscf:	35.204	**Final Volume:**	315.0
		Water Vapor in Flue Gas (Bws):	**0.142**

Project Number:	M170406	**Run Number:**		2	
Client:	East Balt Commissary, LLC	**Operating Level:**		Low Inlet Loading	
Facility:	Chicago, IL	**Time:**	**Start-**	8:40	**End-** 9:25
Test Location:	Oxidizer Inlet Duct	**Test Engineer:**		JEA	
Test Date:	1/27/2017	**Test Tech:**		JRK	

Pressure, Barometric(Hg"):	29.20	**Meter Calibration (Y):**	0.993
Delta H:	1.610	**Meter Delta H (dH):**	1.610
Meter Initial Volume:	115.530	**Initial Wt:**	246.9
Meter Final Volume:	149.388	**Final Wt:**	256.2
Meter Temperature:	34.75	**Initial Volume:**	315.0
Meter Volume dscf:	35.159	**Final Volume:**	435.0
		Water Vapor in Flue Gas (Bws):	**0.148**

Project Number:	M170406	**Run Number:**		3	
Client:	East Balt Commissary, LLC	**Operating Level:**		Low Inlet Loading	
Facility:	Chicago, IL	**Time:**	**Start-**	10:35	**End-** 11:20
Test Location:	Oxidizer Inlet Duct	**Test Engineer:**		JEA	
Test Date:	1/27/2017	**Test Tech:**		JRK	

Pressure, Barometric(Hg"):	29.20	**Meter Calibration (Y):**	0.993
Delta H:	1.610	**Meter Delta H (dH):**	1.610
Meter Initial Volume:	149.840	**Initial Wt:**	256.2
Meter Final Volume:	183.677	**Final Wt:**	265.5
Meter Temperature:	33.00	**Initial Volume:**	435.0
Meter Volume dscf:	35.262	**Final Volume:**	552.0
		Water Vapor in Flue Gas (Bws):	**0.144**

© Mostardi Platt

East Balt Commissary, LLC
Chicago, IL
Oxidizer Outlet Duct
Volumetric Flow Data - Low Inlet Loading

Test Run	Test Date	Pre Flow SCFM	Post Flow SCFM	Average Reference Method Flow SCFM
Pre 1/Post 1	01/27/17	4,735	4,798	4,766
Pre 2/Post 2	01/27/17	4,798	4,864	4,831
Pre 3/Post 3	01/27/17	4,864	4,743	4,804

© Mostardi Platt

Client:	East Balt Commissary, LLC	
Facility:	Chicago, IL	
Test Location:	Oxidizer Outlet Duct	
Project #:	M170406	
Test Method:	2 (Compliance)	
Test Engineer:	JEA	
Test Technician:	JRK	
Type of Fuel Firing:	Natural Gas	
Temp ID:	CM 10	
Meter ID:	CM 10	
Pitot ID:	80	
Pitot Type:	S-Type	
Pitot Tube Coefficient:	0.840	
Probe Length:	5.0	**ft**
Sample Plane:	Horizontal	
Port Length:	5.00	**in.**
Port Size (diameter):	3.00	**in.**
Port Type:	Nipple	
Duct Shape:	Circular	
Diameter:	1.87	**ft**
Duct Area:	2.75	**Sq. Ft.**
Upstream Diameters:	>2	
Downstream Diameters:	107"	
Number of Ports Sampled:	2	
Number of Points per Port:	8	
Total Number of Traverse Points:	16	
Operating Level:	Low	

© Mostardi Platt

METHOD 2 VOLUMETRIC FLOW DATA

Project Number:	M170406	**Operating Level:**	Low Inlet Loading		
Client:	East Balt Commissary, LLC	**Run No.:**	Pre 1		
Facility:	Chicago, IL	**Test Date:**	1/27/2017		
Test Location:	Oxidizer Outlet Duct	**Start Time:**	6:50		
Pitot ID:	80	**End Time:**	7:00		
Pitot Coefficient:	0.840	**Test Engineer:**	JEA	**Test Tech:**	LCM
Probe Length, Feet:	5	**Port Length, Inches:**	5		

Port	Point	DP (in. H_2O)	Sqrt. DP	Temp (°F)	Velocity (V)	Port	Point	DP (in. H_2O)	Sqrt. DP	Temp (°F)	Velocity (V)
A	1	0.38	0.6164	453.0	46.75	B	1	0.43	0.6557	454.0	49.75
A	2	0.46	0.6782	455.0	51.49	B	2	0.46	0.6782	458.0	51.57
A	3	0.44	0.6633	457.0	50.41	B	3	0.41	0.6403	460.0	48.74
A	4	0.41	0.6403	459.0	48.72	B	4	0.40	0.6325	461.0	48.17
A	5	0.39	0.6245	460.0	47.54	B	5	0.37	0.6083	460.0	46.30
A	6	0.44	0.6633	462.0	50.55	B	6	0.42	0.6481	458.0	49.28
A	7	0.47	0.6834	460.0	52.02	B	7	0.57	0.7550	452.0	57.22
A	8	0.60	0.7746	453.0	58.74	B	8	0.64	0.8000	450.0	60.57

Test Parameters

P_{bar} - Barometric pressure, inches Hg	29.20	% CO_2	0.50
P_g - Stack Pressure, inches of H_2O	-0.40	% O_2	19.50
P_s - Absolute stack pressure, inches Hg	29.17	% N_2	80.00
t_s - Average stack temperature, °F	457.0	Md - dry basis lb/lb mole	28.86
Duct Shape:	Circular	Ms - wet basis lb/lb mole	28.067
Diameter, Feet	1.87		
		Bws - Moisture content fraction	**0.073**
Cross Sectional Area of Stack, Ft^2	2.75	Moisture determined by wb/db?	N

Method 2 Results

Average DP	0.4554	Q - ACFM	8,435
Average Sqrt DP	0.6726	Qsd - DSCFM	4,389
Average Velocity Vs (ft/sec)	51.120	Qs - SCFM	4,735
		Qs - SCFH	284,100

© Mostardi Platt

METHOD 2 VOLUMETRIC FLOW DATA

Project Number:	M170406	**Operating Level:**	Low Inlet Loading		
Client:	East Balt Commissary, LLC	**Run No.:**	Post 1/Pre 2		
Facility:	Chicago, IL	**Test Date:**	1/27/2017		
Test Location:	Oxidizer Outlet Duct	**Start Time:**	7:40		
Pitot ID:	80	**End Time:**	7:46		
Pitot Coefficient:	0.840	**Test Engineer:**	JEA	**Test Tech:**	JRK
Probe Length, Feet:	5	**Port Length, Inches:**	5		

Port	Point	DP (in. H_2O)	Sqrt. DP	Temp (°F)	Velocity (V)	Port	Point	DP (in. H_2O)	Sqrt. DP	Temp (°F)	Velocity (V)
A	1	0.39	0.6245	450.0	47.28	B	1	0.42	0.6481	452.0	49.12
A	2	0.44	0.6633	451.0	50.25	B	2	0.46	0.6782	456.0	51.52
A	3	0.42	0.6481	459.0	49.31	B	3	0.40	0.6325	461.0	48.17
A	4	0.40	0.6325	456.0	48.04	B	4	0.37	0.6083	460.0	46.30
A	5	0.38	0.6164	457.0	46.85	B	5	0.43	0.6557	454.0	49.75
A	6	0.46	0.6782	459.0	51.60	B	6	0.54	0.7348	450.0	55.63
A	7	0.46	0.6928	463.0	52.83	B	7	0.61	0.7810	446.0	59.00
A	8	0.62	0.7874	452.0	59.68	B	8	0.65	0.8062	442.0	60.77

Test Parameters

P_{bar} - Barometric pressure, inches Hg	29.20	% CO_2	0.50
P_g - Stack Pressure, inches of H_2O	-0.40	% O_2	19.50
P_s - Absolute stack pressure, inches Hg	29.17	% N_2	80.00
t_s - Average stack temperature, °F	454.3	Md - dry basis lb/lb mole	28.86
Duct Shape:	Circular	Ms - wet basis lb/lb mole	28.067
Diameter, Feet	1.87		
		Bws - Moisture content fraction	**0.073**
Cross Sectional Area of Stack, Ft^2	2.75	Moisture determined by wb/db?	N

Method 2 Results

Average DP	0.4869	Q - ACFM	8,521
Average Sqrt DP	0.6805	Qsd - DSCFM	4,447
Average Velocity Vs (ft/sec)	51.640	Qs - SCFM	4,798
		Qs - SCFH	287,856

© Mostardi Platt

METHOD 2 VOLUMETRIC FLOW DATA

Project Number:	M170406	**Operating Level:**	Low Inlet Loading		
Client:	East Balt Commissary, LLC	**Run No.:**	Post 2/Pre 3		
Facility:	Chicago, IL	**Test Date:**	1/27/2017		
Test Location:	Oxidizer Outlet Duct	**Start Time:**	9:33		
Pitot ID:	80	**End Time:**	9:39		
Pitot Coefficient:	0.840	**Test Engineer:**	JEA	**Test Tech:**	JRK
Probe Length, Feet:	5	**Port Length, Inches:**	5		

Port	Point	DP (in. H_2O)	Sqrt. DP	Temp (°F)	Velocity (V)	Port	Point	DP (in. H_2O)	Sqrt. DP	Temp (°F)	Velocity (V)
A	1	0.36	0.6000	455.0	45.60	B	1	0.40	0.6325	456.0	48.10
A	2	0.42	0.6481	453.0	49.20	B	2	0.47	0.6856	460.0	52.25
A	3	0.41	0.6403	458.0	48.75	B	3	0.43	0.6557	462.0	50.03
A	4	0.39	0.6245	460.0	47.59	B	4	0.38	0.6164	460.0	46.98
A	5	0.46	0.6782	444.0	51.24	B	5	0.41	0.6403	453.0	48.61
A	6	0.45	0.6708	442.0	50.62	B	6	0.56	0.7483	449.0	56.69
A	7	0.60	0.7746	441.0	58.42	B	7	0.62	0.7874	447.0	59.58
A	8	0.62	0.7874	439.0	59.32	B	8	0.67	0.8185	441.0	61.73

Test Parameters

P_{bar} - Barometric pressure, inches Hg	29.20	% CO_2	0.50
P_g - Stack Pressure, inches of H_2O	-0.40	% O_2	19.50
P_s - Absolute stack pressure, inches Hg	29.17	% N_2	80.00
t_s - Average stack temperature, °F	451.3	Md - dry basis lb/lb mole	28.86
Duct Shape:	Circular	Ms - wet basis lb/lb mole	28.002
Diameter, Feet	1.87		
		Bws - Moisture content fraction	**0.079**
Cross Sectional Area of Stack, Ft^2	2.75	Moisture determined by wb/db?	N

Method 2 Results

Average DP	0.4781	Q - ACFM	8,611
Average Sqrt DP	0.6880	Qsd - DSCFM	4,480
Average Velocity Vs (ft/sec)	52.187	Qs - SCFM	4,864
		Qs - SCFH	291,862

© Mostardi Platt

METHOD 2 VOLUMETRIC FLOW DATA

Project Number:	M170406	**Operating Level:**	Low Inlet Loading		
Client:	East Balt Commissary, LLC	**Run No.:**	Post 3		
Facility:	Chicago, IL	**Test Date:**	1/27/2017		
Test Location:	Oxidizer Outlet Duct	**Start Time:**	11:28		
Pitot ID:	80	**End Time:**	11:34		
Pitot Coefficient:	0.840	**Test Engineer:**	JEA	**Test Tech:**	JRK
Probe Length, Feet:	5	**Port Length, Inches:**	5		

Port	Point	DP (in. H_2O)	Sqrt. DP	Temp (°F)	Velocity (V)	Port	Point	DP (in. H_2O)	Sqrt. DP	Temp (°F)	Velocity (V)
A	1	0.38	0.6164	461.0	47.03	B	1	0.43	0.6557	460.0	50.00
A	2	0.44	0.6633	464.0	50.69	B	2	0.46	0.6782	464.0	51.83
A	3	0.40	0.6325	458.0	48.18	B	3	0.44	0.6633	460.0	50.58
A	4	0.37	0.6083	456.0	46.28	B	4	0.37	0.6083	454.0	46.23
A	5	0.44	0.6633	453.0	50.39	B	5	0.39	0.6245	451.0	47.39
A	6	0.41	0.6403	446.0	48.45	B	6	0.38	0.6164	448.0	46.70
A	7	0.58	0.7616	441.0	57.47	B	7	0.54	0.7348	443.0	55.52
A	8	0.60	0.7746	439.0	58.39	B	8	0.63	0.7937	441.0	59.90

Test Parameters

P_{bar} - Barometric pressure, inches Hg	29.20	% CO_2	0.50
P_g - Stack Pressure, inches of H_2O	-0.40	% O_2	19.50
P_s - Absolute stack pressure, inches Hg	29.17	% N_2	80.00
t_s - Average stack temperature, °F	452.4	Md - dry basis lb/lb mole	28.86
Duct Shape:	Circular	Ms - wet basis lb/lb mole	27.969
Diameter, Feet	1.87		
		Bws - Moisture content fraction	**0.082**
Cross Sectional Area of Stack, Ft^2	2.75	Moisture determined by wb/db?	N

Method 2 Results

Average DP	0.4538	Q - ACFM	8,407
Average Sqrt DP	0.6710	Qsd - DSCFM	4,354
Average Velocity Vs (ft/sec)	50.954	Qs - SCFM	4,743
		Qs - SCFH	284,596

© Mostardi Platt

METHOD 4 MOISTURE DETERMINATION

Project Number:	M170406	**Run Number:**	1	
Client:	East Balt Commissary, LLC	**Operating Level:**	Low Inlet Loading	
Facility:	Chicago, IL	**Time:**	**Start-** 6:50	**End-** 7:35
Test Location:	Oxidizer Outlet Duct	**Test Engineer:**	JEA	
Test Date:	1/27/2017	**Test Tech:**	JRK	

Pressure, Barometric(Hg"):	29.20	**Meter Calibration (Y):**	1.015
Delta H:	1.537	**Meter Delta H (dH):**	1.537
Meter Initial Volume:	20.930	**Initial Wt:**	248.1
Meter Final Volume:	54.722	**Final Wt:**	252.9
Meter Temperature:	34.75	**Initial Volume:**	200.0
Meter Volume dscf:	35.861	**Final Volume:**	255.0
		Water Vapor in Flue Gas (Bws):	0.073

Project Number:	M170406	**Run Number:**	2	
Client:	East Balt Commissary, LLC	**Operating Level:**	Low Inlet Loading	
Facility:	Chicago, IL	**Time:**	**Start-** 8:40	**End-** 9:25
Test Location:	Oxidizer Outlet Duct	**Test Engineer:**	JEA	
Test Date:	1/27/2017	**Test Tech:**	JRK	

Pressure, Barometric(Hg"):	29.20	**Meter Calibration (Y):**	1.015
Delta H:	1.537	**Meter Delta H (dH):**	1.537
Meter Initial Volume:	55.246	**Initial Wt:**	252.9
Meter Final Volume:	89.081	**Final Wt:**	258.0
Meter Temperature:	34.90	**Initial Volume:**	255.0
Meter Volume dscf:	35.875	**Final Volume:**	315.0
		Water Vapor in Flue Gas (Bws):	0.079

Project Number:	M170406	**Run Number:**	3	
Client:	East Balt Commissary, LLC	**Operating Level:**	Low Inlet Loading	
Facility:	Chicago, IL	**Time:**	**Start-** 10:35	**End-** 11:20
Test Location:	Oxidizer Outlet Duct	**Test Engineer:**	JEA	
Test Date:	1/27/2017	**Test Tech:**	JRK	

Pressure, Barometric(Hg"):	29.20	**Meter Calibration (Y):**	1.015
Delta H:	1.537	**Meter Delta H (dH):**	1.537
Meter Initial Volume:	89.730	**Initial Wt:**	258.0
Meter Final Volume:	123.571	**Final Wt:**	263.4
Meter Temperature:	34.85	**Initial Volume:**	315.0
Meter Volume dscf:	35.906	**Final Volume:**	378.0
		Water Vapor in Flue Gas (Bws):	0.082

© Mostardi Platt

Method 25A Field Data Sheet

Project:	M170406	Operator:	JFR
Client:	East Balt Commissary, Inc.	Source:	1. Oxidizer Inlet
Location:	Chicago, IL		2. Oxidizer Outlet
Date:	2/16/17		3.

High Inlet Loading

Parameters	Location 1	Location 2	Location 3
Test 1			
Time	1040-1140		
VOC ppmv as C_3H_8	411.2 ⇒ 1480.3	4.90 ⇒ 17.5	
Air flow, scfm	3361	4887	
VOC lbs/hr as	9.47		
Removal Efficiency, %			
Test 2			
Time	1220-1320		
VOC ppmv as C_3H_8	437.8 ⇒ 1576.1	3.7 ⇒ 13.2	
Air flow, scfm	3136	4851	
VOC lbs/hr as			
Removal Efficiency, %			
Test 3			
Time	1350-1436, 1452-1510		
VOC ppmv as C_3H_8	400.3 ⇒	4.4 ⇒ 15.8	
Air flow, scfm	3178	4715	
VOC lbs/hr as			
Removal Efficiency, %			

© Mostardi Platt

Client: East Balt Commissary, LLC
Facility: Chicago Illinois
Project #: M170406
Location: Catalytic Oxidizer (High Inlet Loading)
Date: 2/16/17

Run 1

Time	CH4 ppmv Inlet A	NMHC ppmv Inlet	CH4 ppmv outlet	NMHC ppmv Outlet
10:40	133.00	435.70	152.30	5.20
10:41	137.70	436.70	153.60	5.20
10:42	143.10	434.70	148.00	5.00
10:43	131.40	429.00	141.90	4.90
10:44	132.60	424.40	151.30	5.00
10:45	148.00	416.30	149.80	5.00
10:46	144.80	400.90	155.30	5.20
10:47	134.90	392.30	153.90	5.20
10:48	139.70	391.90	145.90	5.00
10:49	145.20	391.50	148.80	5.10
10:50	131.10	392.30	152.40	5.20
10:51	134.70	392.00	147.30	4.80
10:52	147.60	391.10	149.80	4.80
10:53	137.30	390.90	159.20	5.10
10:54	130.20	389.70	150.50	4.80
10:55	146.00	388.50	141.80	4.60
10:56	136.20	388.40	150.20	5.00
10:57	130.50	387.30	146.20	4.70
10:58	138.00	391.10	140.00	4.40
10:59	140.60	389.90	153.30	5.00
11:00	135.60	388.60	153.20	5.00
11:01	129.30	392.10	139.00	4.30
11:02	132.40	393.50	142.60	4.50
11:03	132.80	393.70	157.30	4.90
11:04	138.20	392.50	147.10	4.50
11:05	135.20	393.40	138.60	4.40
11:06	137.10	390.80	161.30	5.10
11:07	142.80	391.70	150.30	4.80
11:08	139.00	392.40	143.30	4.50
11:09	136.70	390.60	159.30	5.20
11:10	139.10	386.50	144.10	4.70
11:11	139.10	385.40	139.00	4.40
11:12	136.50	385.90	153.30	5.10
11:13	142.40	389.30	155.50	5.10
11:14	141.90	392.40	142.40	4.60
11:15	138.00	389.90	151.80	4.70
11:16	138.40	388.60	155.90	4.90
11:17	142.20	385.40	143.30	4.40
11:18	142.60	388.10	156.70	4.80
11:19	138.40	390.20	161.90	5.00
11:20	134.40	393.20	139.40	4.30
11:21	133.40	392.70	136.10	4.20
11:22	148.00	394.30	168.90	5.30
11:23	152.40	396.50	161.80	5.00
11:24	141.30	398.10	144.40	4.40
11:25	140.30	400.40	157.50	4.90
11:26	154.20	402.30	156.10	5.00
11:27	147.70	410.40	135.00	4.50
11:28	140.10	428.10	149.40	5.10
11:29	165.50	439.30	168.00	5.70
11:30	158.80	447.10	145.80	4.70
11:31	134.90	454.60	142.70	4.60
11:32	154.60	457.30	165.70	5.40
11:33	165.70	462.10	151.90	5.00
11:34	132.80	465.20	135.30	4.50
11:35	149.40	471.00	156.40	5.20
11:36	179.60	506.80	156.80	5.20
11:37	153.20	513.50	140.30	4.60
11:38	149.00	502.30	149.40	4.70
11:39	172.20	483.70	160.60	5.10
Average	**142.10**	**411.20**	**150.10**	**4.90**
Min	129.30	385.40	135.00	4.20
Max	179.60	513.50	168.90	5.70

© Mostardi Platt

Client: East Balt Commissary, LLC
Facility: Chicago Illinois
Project #: M170406
Location: Catalytic Oxidizer (High Inlet Loading)
Date: 2/16/17

Run 2

Time	CH4 ppmv Inlet A	NMHC ppmv Inlet	CH4 ppmv outlet	NMHC ppmv Outlet
12:20	162.80	453.50	126.90	4.10
12:21	149.30	457.20	106.20	3.40
12:22	163.70	445.70	127.10	4.10
12:23	171.10	434.50	131.70	4.30
12:24	169.80	428.60	121.30	3.90
12:25	158.80	432.80	121.50	3.80
12:26	166.20	435.00	127.50	4.10
12:27	174.10	428.80	121.80	3.80
12:28	157.40	423.70	119.30	3.70
12:29	160.10	426.00	127.60	4.20
12:30	171.30	426.80	124.20	4.20
12:31	165.90	424.80	115.90	3.90
12:32	161.70	422.30	123.60	4.10
12:33	168.50	418.50	125.40	4.00
12:34	170.70	418.10	116.90	3.70
12:35	161.90	418.80	124.70	3.90
12:36	161.20	414.40	126.40	3.90
12:37	167.80	408.40	122.00	3.90
12:38	158.60	409.30	124.20	4.00
12:39	147.80	409.50	124.90	4.20
12:40	153.60	394.70	107.40	3.60
12:41	163.80	394.20	122.90	4.10
12:42	162.10	408.50	133.90	4.60
12:43	151.50	424.80	118.40	3.90
12:44	168.10	415.40	118.90	3.90
12:45	159.80	428.90	141.00	4.70
12:46	150.30	453.70	112.30	3.60
12:47	166.60	454.90	115.60	3.60
12:48	163.00	455.20	134.70	4.20
12:49	165.50	431.60	126.90	3.90
12:50	165.60	422.70	117.10	3.50
12:51	155.30	452.60	128.70	3.90
12:52	153.80	454.80	117.00	3.70
12:53	133.70	446.60	102.20	3.10
12:54	158.70	478.90	122.60	3.70
12:55	164.10	436.00	129.80	3.90
12:56	170.50	423.40	119.30	3.60
12:57	160.90	431.40	124.60	3.60
12:58	157.50	440.80	123.70	3.70
12:59	166.80	456.90	114.00	3.50
13:00	154.10	458.40	116.90	3.60
13:01	154.10	450.40	124.20	3.60
13:02	169.90	446.60	117.50	3.40
13:03	169.20	456.30	110.00	2.90
13:04	160.80	463.70	114.40	3.10
13:05	164.20	455.70	112.00	3.10
13:06	160.90	445.70	110.00	3.20
13:07	161.70	443.50	114.10	3.30
13:08	159.20	443.20	122.00	3.60
13:09	167.00	446.60	125.20	3.60
13:10	158.50	444.00	125.00	3.60
13:11	156.00	442.90	118.20	3.40
13:12	168.00	452.50	80.50	1.90
13:13	158.70	463.90	119.50	3.60
13:14	156.60	465.90	140.50	4.20
13:15	166.60	470.00	125.70	3.60
13:16	158.60	450.70	116.90	3.20
13:17	157.70	439.50	133.50	3.60
13:18	169.40	431.70	127.60	3.70
13:19	167.60	452.50	116.90	3.40
Average	**161.60**	**437.80**	**121.00**	**3.70**
Min	133.70	394.20	80.50	1.90
Max	174.10	478.90	141.00	4.70

© Mostardi Platt

Client: East Balt Commissary, LLC
Facility: Chicago Illinois
Project #: M170406
Location: Catalytic Oxidizer (High Inlet Loading)
Date: 2/16/17

Run 3

Time	CH4 ppmv Inlet A	NMHC ppmv Inlet	CH4 ppmv outlet	NMHC ppmv Outlet
13:56	165.40	452.20	147.40	4.50
13:57	160.00	445.90	154.80	4.70
13:58	158.50	440.70	158.00	4.80
13:59	168.60	434.60	150.80	4.70
14:00	158.00	435.70	149.80	4.70
14:01	163.60	431.40	161.80	5.00
14:02	178.20	430.50	160.20	4.90
14:03	159.10	431.70	148.40	4.50
14:04	161.90	433.10	155.60	4.90
14:05	165.30	435.40	152.50	4.70
14:06	158.90	438.00	142.20	4.30
14:07	161.80	449.60	154.30	4.60
14:08	175.50	461.00	165.30	5.00
14:09	167.50	480.10	148.10	4.50
14:10	156.20	593.00	152.00	4.90
14:11	161.90	542.50	160.10	4.80
14:12	158.50	511.90	146.90	4.40
14:13	158.70	507.70	155.80	4.60
14:14	159.90	509.70	161.50	4.60
14:15	158.30	501.60	146.80	4.20
14:16	157.60	505.00	150.70	4.40
14:17	155.00	493.80	155.50	4.60
14:18	160.40	487.60	146.50	4.20
14:19	164.20	488.10	150.40	4.50
14:20	165.00	493.20	163.10	4.90
14:21	162.00	495.60	153.90	4.50
14:22	155.00	491.30	145.80	4.20
14:23	161.50	484.90	157.40	4.50
14:24	175.60	484.20	157.40	4.30
14:25	165.00	490.60	140.30	3.80
14:26	146.90	492.20	133.40	3.60
14:27	155.00	483.20	142.00	3.80
14:28	162.50	475.40	138.00	3.80
14:29	159.50	476.20	146.60	4.10
14:30	162.20	464.90	153.20	4.30
14:31	164.80	463.80	151.40	4.10
14:32	154.80	465.80	148.70	4.00
14:33	107.20	451.40	109.20	2.90
14:34	106.10	437.60	96.50	2.50
14:35	148.80	436.60	135.60	3.70
14:36	173.60	434.40	157.30	4.50
14:52	156.50	452.40	141.60	4.30
14:53	171.10	462.80	147.50	4.60
14:54	177.30	464.40	147.80	4.50
14:55	156.00	476.40	135.10	4.10
14:56	164.70	497.20	138.50	4.20
14:57	165.60	487.90	152.40	4.60
14:58	165.80	473.80	141.80	4.20
14:59	154.30	467.20	136.20	4.20
15:00	174.90	473.00	144.10	4.50
15:01	170.00	467.90	135.90	4.30
15:02	153.60	465.80	135.90	4.20
15:03	166.10	459.10	138.50	4.30
15:04	172.50	448.90	145.20	4.50
15:05	153.40	455.90	131.50	4.00
15:06	176.70	476.70	147.30	4.70
15:07	187.10	467.90	146.80	4.70
15:08	144.40	460.00	128.50	4.10
15:09	151.00	457.40	141.40	4.60
15:10	171.30	441.00	138.20	4.40
Average	**161.50**	**470.30**	**146.30**	**4.40**
Min	106.10	430.50	96.50	2.50
Max	187.10	593.00	165.30	5.00

© Mostardi Platt

East Bait Commissary, LLC
Chicago, Illinois
Catalytic Oxidizer Inlet Duct
Volumetric Flow Data - High Inlet Loading

Test Run	Test Date	Pre Flow SCFH	Post Flow SCFH	Average Reference Method Flow SCFM
Pre 1/Post 1	02/16/17	3,440	3,281	3,361
Pre 2/Post 2	02/16/17	3,281	2,990	3,136
Pre 3/Post 3	02/16/17	3,169	3,186	3,178

© Mostardi Platt

Client:	East Balt Commissary, LLC	
Facility:	Chicago, Illinois	
Test Location:	Catalytic Oxidizer Inlet Duct	
Project #:	M170406	
Test Method:	2 (Compliance)	
Test Engineer:	DJK	
Test Technician:	EMC	
Type of Fuel Firing:	Natural Gas	
Temp ID:	CM23	
Meter ID:	CM23	
Pitot ID:	14	
Pitot Type:	S-Type	
Pitot Tube Coefficient:	0.840	
Probe Length:	4.0	**ft**
Sample Plane:	Horizontal	
Port Length:	2.00	**in.**
Port Size (diameter):	4.00	**in.**
Port Type:	Nipple	
Duct Shape:	Circular	
Diameter:	1.833333	**ft**
Duct Area:	2.64	**Sq. Ft.**
Upstream Diameters:	73"	
Downstream Diameters:	81"	
Number of Ports Sampled:	2	
Number of Points per Port:	8	
Total Number of Traverse Points:	16	
Operating Level:	High Inlet Loading	

© Mostardi Platt

METHOD 2 VOLUMETRIC FLOW DATA

Project Number:	M170406	**Operating Level:**	High Inlet Loading		
Client:	East Balt Commissary, LLC	**Run No.:**	1		
Facility:	Chicago, Illinois	**Test Date:**	2/16/2017		
Test Location:	Catalytic Oxidizer Inlet Duct	**Start Time:**	9:35		
Pitot ID:	14	**End Time:**	9:46		
Pitot Coefficient:	0.840	**Test Engineer:**	DJK	**Test Tech:**	EMC
Probe Length, Feet:	4	**Port Length, Inches:**	2		

Port	Point	DP (In. H_2O)	Sqrt. DP	Temp (°F)	Velocity (V)	Port	Point	DP (In. H_2O)	Sqrt. DP	Temp (°F)	Velocity (V)
A	1	0.28	0.5292	332.0	37.78	B	1	0.18	0.4243	330.0	30.25
A	2	0.27	0.5196	335.0	37.17	B	2	0.18	0.4243	330.0	30.25
A	3	0.23	0.4796	335.0	34.30	B	3	0.17	0.4123	329.0	29.38
A	4	0.20	0.4472	335.0	31.99	B	4	0.16	0.4000	312.0	28.19
A	5	0.16	0.4000	336.0	28.63	B	5	0.20	0.4472	315.0	31.58
A	6	0.16	0.4000	336.0	28.63	B	6	0.21	0.4583	314.0	32.34
A	7	0.18	0.4243	280.0	29.28	B	7	0.33	0.5745	311.0	40.46
A	8	0.19	0.4359	275.0	29.98	B	8	0.37	0.6083	310.0	42.82

Test Parameters

P_{bar} - Barometric pressure, Inches Hg	29.23	% CO_2	0.50
P_g - Stack Pressure, Inches of H_2O	1.60	% O_2	19.50
P_s - Absolute stack pressure, Inches Hg	29.35	% N_2	80.00
t_s - Average stack temperature, °F	319.7	Md - dry basis lb/lb mole	28.88
Duct Shape:	Circular	Ms - wet basis lb/lb mole	27.307
Diameter, Feet	1.833333		
		Bws - Moisture content fraction	**0.143**
Cross Sectional Area of Stack, Ft^2	2.64	Moisture determined by wb/db?	N

Method 2 Results

Average DP	0.2169	Q - ACFM	5,178
Average Sqrt DP	0.4615	Qsd - DSCFM	2,948
Average Velocity Vs (ft/sec)	32.692	Qs - SCFM	3,440
		Qs - SCFH	206,385

© Mostardi Platt

METHOD 2 VOLUMETRIC FLOW DATA

Project Number:	M170406	**Operating Level:**	High Inlet Loading		
Client:	East Balt Commissary, LLC	**Run No.:**	2		
Facility:	Chicago, Illinois	**Test Date:**	2/16/2017		
Test Location:	Catalytic Oxidizer Inlet Duct	**Start Time:**	10:49		
Pitot ID:	14	**End Time:**	10:58		
Pitot Coefficient:	0.840	**Test Engineer:**	DJK	**Test Tech:**	EMC
Probe Length, Feet:	4	**Port Length, Inches:**	2		

Port	Point	DP (In. H_2O)	Sqrt. DP	Temp (°F)	Velocity (V)	Port	Point	DP (In. H_2O)	Sqrt. DP	Temp (°F)	Velocity (V)
A	1	0.28	0.5292	328.0	37.68	B	1	0.16	0.4000	315.0	28.25
A	2	0.24	0.4899	328.0	34.89	B	2	0.16	0.4000	317.0	28.28
A	3	0.15	0.3873	328.0	27.58	B	3	0.16	0.4000	320.0	28.34
A	4	0.14	0.3742	330.0	26.68	B	4	0.15	0.3873	310.0	27.26
A	5	0.16	0.4000	330.0	28.52	B	5	0.21	0.4583	323.0	32.53
A	6	0.17	0.4123	330.0	29.40	B	6	0.21	0.4583	315.0	32.36
A	7	0.17	0.4123	312.0	29.06	B	7	0.29	0.5385	310.0	37.91
A	8	0.18	0.4243	280.0	29.28	B	8	0.32	0.5657	315.0	39.95

Test Parameters

P_{bar} - Barometric pressure, inches Hg	29.23	% CO_2	0.50
P_g - Stack Pressure, inches of H_2O	1.60	% O_2	19.50
P_s - Absolute stack pressure, inches Hg	29.35	% N_2	80.00
t_s - Average stack temperature, °F	318.2	Md - dry basis lb/lb mole	28.86
Duct Shape:	Circular	Ms - wet basis lb/lb mole	27.307
Diameter, Feet	1.833333		
		Bws - Moisture content fraction	**0.143**
Cross Sectional Area of Stack, Ft^2	2.64	Moisture determined by wb/db (Y or N)	N

Method 2 Results

Average DP	0.1969	Q - ACFM	4,930
Average Sqrt DP	0.4398	Qsd - DSCFM	2,812
Average Velocity Vs (ft/sec)	31.125	Qs - SCFM	3,281
		Qs - SCFH	196,867

© Mostardi Platt

METHOD 2 VOLUMETRIC FLOW DATA

Project Number:	M170406	**Operating Level:**	High Inlet Loading		
Client:	East Balt Commissary, LLC	**Run No.:**	3		
Facility:	Chicago, Illinois	**Test Date:**	2/16/2017		
Test Location:	Catalytic Oxidizer Inlet Duct	**Start Time:**	12:55		
Pitot ID:	14	**End Time:**	13:04		
Pitot Coefficient:	0.840	**Test Engineer:**	DJK	**Test Tech:**	EMC
Probe Length, Feet:	4	**Port Length, Inches:**	2		

Port	Point	DP (In. H_2O)	Sqrt. DP	Temp (°F)	Velocity (V)	Port	Point	DP (In. H_2O)	Sqrt. DP	Temp (°F)	Velocity (V)
A	1	0.25	0.5000	315.0	35.27	B	1	0.14	0.3742	312.0	26.34
A	2	0.22	0.4690	320.0	33.19	B	2	0.14	0.3742	326.0	26.58
A	3	0.18	0.4243	323.0	30.08	B	3	0.13	0.3606	328.0	25.64
A	4	0.17	0.4123	325.0	29.27	B	4	0.13	0.3606	329.0	25.66
A	5	0.13	0.3606	326.0	25.61	B	5	0.10	0.3162	329.0	22.51
A	6	0.12	0.3464	325.0	24.59	B	6	0.22	0.4690	320.0	33.19
A	7	0.15	0.3873	315.0	27.32	B	7	0.19	0.4359	329.0	31.02
A	8	0.16	0.4000	303.0	27.99	B	8	0.20	0.4472	329.0	31.83

Test Parameters

P_{bar} - Barometric pressure, inches Hg	29.23	% CO_2	0.50
P_g - Stack Pressure, inches of H_2O	1.60	% O_2	19.50
P_s - Absolute stack pressure, inches Hg	29.35	% N_2	80.00
t_s - Average stack temperature, °F	322.1	Md - dry basis lb/lb mole	28.86
Duct Shape:	Circular	Ms - wet basis lb/lb mole	27.372
Diameter, Feet	1.833333		
		Bws - Moisture content fraction	**0.137**
Cross Sectional Area of Stack, Ft^2	2.64	Moisture determined by wb/db (Y or N)	N

Method 2 Results

Average DP	0.1644	Q - ACFM	4,516
Average Sqrt DP	0.4024	Qsd - DSCFM	2,581
Average Velocity Vs (ft/sec)	28.510	Qs - SCFM	2,990
		Qs - SCFH	179,423

© Mostardi Platt

METHOD 2 VOLUMETRIC FLOW DATA

Project Number:	M170406	**Operating Level:**	High Inlet Loading		
Client:	East Balt Commissary, LLC	**Run No.:**	4		
Facility:	Chicago, Illinois	**Test Date:**	2/16/2017		
Test Location:	Catalytic Oxidizer Inlet Duct	**Start Time:**	13:55		
Pitot ID:	14	**End Time:**	14:03		
Pitot Coefficient:	0.840	**Test Engineer:**	DJK	**Test Tech:**	EMC
Probe Length, Feet:	4	**Port Length, Inches:**	2		

Port	Point	DP (In. H_2O)	Sqrt. DP	Temp (°F)	Velocity (V)	Port	Point	DP (In. H_2O)	Sqrt. DP	Temp (°F)	Velocity (V)
A	1	0.25	0.5000	325.0	35.49	B	1	0.18	0.4243	320.0	30.02
A	2	0.22	0.4690	325.0	33.30	B	2	0.17	0.4123	317.0	29.12
A	3	0.18	0.4243	321.0	30.04	B	3	0.15	0.3873	323.0	27.46
A	4	0.15	0.3873	322.0	27.44	B	4	0.15	0.3873	323.0	27.46
A	5	0.13	0.3606	327.0	25.63	B	5	0.18	0.4243	319.0	30.00
A	6	0.12	0.3464	328.0	24.64	B	6	0.23	0.4796	325.0	34.04
A	7	0.16	0.4000	320.0	28.30	B	7	0.23	0.4796	315.0	33.83
A	8	0.16	0.4000	321.0	28.32	B	8	0.28	0.5292	285.0	36.59

Test Parameters

P_{bar} - Barometric pressure, inches Hg	29.23	% CO_2	0.50
P_g - Stack Pressure, inches of H_2O	1.60	% O_2	19.50
P_s - Absolute stack pressure, inches Hg	29.35	% N_2	80.00
t_s - Average stack temperature, °F	319.8	Md - dry basis lb/lb mole	28.86
Duct Shape:	Circular	Ms - wet basis lb/lb mole	27.372
Diameter, Feet	1.833333		
		Bws - Moisture content fraction	**0.137**
Cross Sectional Area of Stack, Ft^2	2.64	Moisture determined by wb/db (Y or N)	N

Method 2 Results

Average DP	0.1838	Q - ACFM	4,771
Average Sqrt DP	0.4257	Qsd - DSCFM	2,735
Average Velocity Vs (ft/sec)	30.119	Qs - SCFM	3,169
		Qs - SCFH	190,125

© Mostardi Platt

METHOD 2 VOLUMETRIC FLOW DATA

Project Number:	M170406	**Operating Level:**	High Inlet Loading		
Client:	East Balt Commissary, LLC	**Run No.:**	5		
Facility:	Chicago, Illinois	**Test Date:**	2/16/2017		
Test Location:	Catalytic Oxidizer Inlet Duct	**Start Time:**	15:04		
Pitot ID:	14	**End Time:**	15:10		
Pitot Coefficient:	0.840	**Test Engineer:**	DJK	**Test Tech:**	EMC
Probe Length, Feet:	4	**Port Length, Inches:**	2		

Port	Point	DP (in. H_2O)	Sqrt. DP	Temp (°F)	Velocity (V)	Port	Point	DP (in. H_2O)	Sqrt. DP	Temp (°F)	Velocity (V)
A	1	0.26	0.5099	315.0	35.92	B	1	0.18	0.4243	310.0	29.79
A	2	0.24	0.4899	318.0	34.57	B	2	0.17	0.4123	315.0	29.04
A	3	0.21	0.4583	315.0	32.28	B	3	0.15	0.3873	320.0	27.37
A	4	0.18	0.4243	320.0	29.98	B	4	0.16	0.4000	318.0	28.23
A	5	0.16	0.4000	322.0	28.30	B	5	0.14	0.3742	314.0	26.34
A	6	0.17	0.4123	321.0	29.15	B	6	0.19	0.4359	323.0	30.86
A	7	0.15	0.3873	322.0	27.40	B	7	0.20	0.4472	318.0	31.56
A	8	0.15	0.3873	300.0	27.01	B	8	0.24	0.4899	300.0	34.17

Test Parameters

P_{bar} - Barometric pressure, inches Hg	29.23	% CO_2	0.50
P_g - Stack Pressure, inches of H_2O	1.60	% O_2	19.50
P_s - Absolute stack pressure, Inches Hg	29.35	% N_2	80.00
t_s - Average stack temperature, °F	315.7	Md - dry basis lb/lb mole	28.86
Duct Shape:	Circular	Ms - wet basis lb/lb mole	27.448
Diameter, Feet	1.833333		
		Bws - Moisture content fraction	**0.130**
Cross Sectional Area of Stack, Ft^2	2.64	Moisture determined by wb/db (Y or N)	N

Method 2 Results

Average DP	0.1844	Q - ACFM	4,772
Average Sqrt DP	0.4275	Qsd - DSCFM	2,772
Average Velocity Vs (ft/sec)	30.126	Qs - SCFM	3,186
		Qs - SCFH	191,167

© Mostardi Platt

METHOD 4 MOISTURE DETERMINATION

Project Number:	M170406	**Run Number:**	1		
Client:	East Balt Commissary, LLC	**Operating Level:**	High Inlet Loading		
Facility:	Chicago, Illinois	**Time:**	**Start-** 9:45		**End-** 10:30
Test Location:	Catalytic Oxidizer Inlet Duct	**Test Engineer:**	DJK		
Test Date:	2/16/2017	**Test Tech:**	EMC		
Pressure, Barometric(Hg"):	29.23	**Meter Calibration (Y):**	1.007		
Delta H:	1.750	**Meter Delta H (dH):**	1.747		
Meter Initial Volume:	67.597	**Initial Wt:**	237.8		
Meter Final Volume:	88.721	**Final Wt:**	239.2		
Meter Temperature:	51.00	**Initial Volume:**	200.0		
Meter Volume dscf:	21.567	**Final Volume:**	275.0		
		Water Vapor in Flue Gas (Bws):	0.143		

Project Number:	M170406	**Run Number:**	2		
Client:	East Balt Commissary, LLC	**Operating Level:**	High Inlet Loading		
Facility:	Chicago, Illinois	**Time:**	**Start-** 12:20		**End-** 13:05
Test Location:	Catalytic Oxidizer Inlet Duct	**Test Engineer:**	DJK		
Test Date:	2/16/2017	**Test Tech:**	EMC		
Pressure, Barometric(Hg"):	29.23	**Meter Calibration (Y):**	1.007		
Delta H:	1.750	**Meter Delta H (dH):**	1.747		
Meter Initial Volume:	89.041	**Initial Wt:**	236.2		
Meter Final Volume:	110.125	**Final Wt:**	245.3		
Meter Temperature:	49.00	**Initial Volume:**	235.0		
Meter Volume dscf:	21.611	**Final Volume:**	299.0		
		Water Vapor in Flue Gas (Bws):	0.137		

Project Number:	M170406	**Run Number:**	3		
Client:	East Balt Commissary, LLC	**Operating Level:**	High Inlet Loading		
Facility:	Chicago, Illinois	**Time:**	**Start-** 13:55		**End-** 14:40
Test Location:	Catalytic Oxidizer Inlet Duct	**Test Engineer:**	DJK		
Test Date:	2/16/2017	**Test Tech:**	EMC		
Pressure, Barometric(Hg"):	29.23	**Meter Calibration (Y):**	1.007		
Delta H:	1.750	**Meter Delta H (dH):**	1.747		
Meter Initial Volume:	10.355	**Initial Wt:**	243.2		
Meter Final Volume:	31.521	**Final Wt:**	247.7		
Meter Temperature:	51.00	**Initial Volume:**	200.0		
Meter Volume dscf:	21.610	**Final Volume:**	264.0		
		Water Vapor in Flue Gas (Bws):	0.130		

© Mostardi Platt

East Bait Commissary, LLC
Chicago, Illinois
Oxidizer Stack
Volumetric Flow Data - High Inlet Loading

Test Run	Test Date	Pre Flow SCFH	Post Flow SCFH	Average Reference Method Flow SCFM
Pre 1/Post 1	02/16/17	4,872	4,902	4,887
Pre 2/Post 2	02/16/17	4,902	4,799	4,851
Pre 3/Post 3	02/16/17	4,727	4,702	4,715

© Mostardi Platt

Client:	East Balt Commissary, LLC	
Facility:	Chicago, Illinois	
Test Location:	Oxidizer Stack	
Project #:	M170406	
Test Method:	2 (Compliance)	
Test Engineer:	DJK	
Test Technician:	EMC	
Type of Fuel Firing:	Natural Gas	
Temp ID:	CM19	
Meter ID:	CM19	
Pitot ID:	14	
Pitot Type:	S-Type	
Pitot Tube Coefficient:	0.840	
Probe Length:	4.0	**ft**
Sample Plane:	Horizontal	
Port Length:	5.00	**in.**
Port Size (diameter):	3.00	**in.**
Port Type:	Flange	
Duct Shape:	Circular	
Diameter:	1.875	**ft**
Duct Area:	2.76	**Sq. Ft.**
Upstream Diameters:	>2	
Downstream Diameters:	107"	
Number of Ports Sampled:	2	
Number of Points per Port:	8	
Total Number of Traverse Points:	16	
Operating Level:	High Inlet Loading	

© Mostardi Platt

METHOD 2 VOLUMETRIC FLOW DATA

Project Number:	M170406	**Operating Level:**	High Inlet Loading		
Client:	East Balt Commissary, LLC	**Run No.:**	1		
Facility:	Chicago, Illinois	**Test Date:**	2/16/2017		
Test Location:	Oxidizer Stack	**Start Time:**	9:47		
Pitot ID:	14	**End Time:**	9:58		
Pitot Coefficient:	0.840	**Test Engineer:**	DJK	**Test Tech:**	EMC
Probe Length, Feet:	4	**Port Length, Inches:**	5		

Port	Point	DP (in. H_2O)	Sqrt. DP	Temp (°F)	Velocity (V)	Port	Point	DP (in. H_2O)	Sqrt. DP	Temp (°F)	Velocity (V)
A	1	0.44	0.6633	513.0	51.81	B	1	0.52	0.7211	528.0	56.76
A	2	0.49	0.7000	514.0	54.71	B	2	0.54	0.7348	526.0	57.78
A	3	0.51	0.7141	515.0	55.84	B	3	0.51	0.7141	527.0	56.18
A	4	0.45	0.6708	518.0	52.53	B	4	0.45	0.6708	527.0	52.77
A	5	0.47	0.6856	521.0	53.77	B	5	0.44	0.6633	526.0	52.16
A	6	0.56	0.7483	537.0	59.17	B	6	0.47	0.6856	528.0	53.96
A	7	0.58	0.7616	545.0	60.46	B	7	0.54	0.7348	530.0	57.90
A	8	0.66	0.8124	542.0	64.40	B	8	0.57	0.7550	540.0	59.79

Test Parameters

P_{bar} - Barometric pressure, inches Hg	29.23	% CO_2	0.50
P_g - Stack Pressure, inches of H_2O	0.50	% O_2	19.50
P_s - Abeolute stack pressure, inches Hg	29.27	% N_2	80.00
t_s - Average stack temperature, °F	527.3	Md - dry basis lb/lb mole	28.88
Duct Shape:	Circular	Ms - wet basis lb/lb mole	28.100
Diameter, Feet	1.875		
		Bws - Moisture content fraction	**0.070**
Cross Sectional Area of Stack, Ft^2	2.76	Moisture determined by wb/db?	N

Method 2 Results

Average DP	0.5125	Q - ACFM	9,313
Average Sqrt DP	0.7147	Qsd - DSCFM	4,531
Average Velocity Vs (ft/sec)	56.238	Qs - SCFM	4,872
		Qs - SCFH	292,303

© Mostardi Platt

METHOD 2 VOLUMETRIC FLOW DATA

Project Number:	M170406	**Operating Level:**	High Inlet Loading		
Client:	East Balt Commissary, LLC	**Run No.:**	2		
Facility:	Chicago, Illinois	**Test Date:**	2/16/2017		
Test Location:	Oxidizer Stack	**Start Time:**	10:39		
Pitot ID:	14	**End Time:**	10:48		
Pitot Coefficient:	0.840	**Test Engineer:**	DJK	**Test Tech:**	EMC
Probe Length, Feet:	4	**Port Length, Inches:**	5		

Port	Point	DP (in. H_2O)	Sqrt. DP	Temp (°F)	Velocity (V)	Port	Point	DP (in. H_2O)	Sqrt. DP	Temp (°F)	Velocity (V)
A	1	0.38	0.6164	480.0	47.33	B	1	0.44	0.6633	499.0	51.44
A	2	0.38	0.6164	484.0	47.43	B	2	0.46	0.6782	503.0	52.70
A	3	0.45	0.6708	505.0	52.18	B	3	0.46	0.6782	508.0	52.84
A	4	0.44	0.6633	512.0	51.79	B	4	0.42	0.6481	507.0	50.47
A	5	0.45	0.6708	520.0	52.59	B	5	0.58	0.7616	515.0	59.55
A	6	0.62	0.7874	520.0	61.73	B	6	0.58	0.7616	528.0	59.94
A	7	0.66	0.8124	545.0	64.49	B	7	0.63	0.7937	531.0	62.57
A	8	0.68	0.8246	548.0	65.56	B	8	0.62	0.7874	535.0	62.20

Test Parameters

P_{bar} - Barometric pressure, Inches Hg	29.23	% CO_2	0.50
P_g - Stack Pressure, Inches of H_2O	0.50	% O_2	19.50
P_s - Absolute stack pressure, Inches Hg	29.27	% N_2	80.00
t_s - Average stack temperature, °F	515.0	Md - dry basis lb/lb mole	28.86
Duct Shape:	Circular	Ms - wet basis lb/lb mole	28.100
Diameter, Feet	1.875		
		Bws - Moisture content fraction	**0.070**
Cross Sectional Area of Stack, Ft^2	2.76	Moisture determined by wb/db (Y or N)	N

Method 2 Results

Average DP	0.5156	Q - ACFM	9,254
Average Sqrt DP	0.7147	Qsd - DSCFM	4,559
Average Velocity Vs (ft/sec)	55.879	Qs - SCFM	4,902
		Qs - SCFH	294,108

© Mostardi Platt

METHOD 2 VOLUMETRIC FLOW DATA

Project Number:	M170406	**Operating Level:**	High Inlet Loading		
Client:	East Balt Commissary, LLC	**Run No.:**	3		
Facility:	Chicago, Illinois	**Test Date:**	2/16/2017		
Test Location:	Oxidizer Stack	**Start Time:**	13:05		
Pitot ID:	14	**End Time:**	13:14		
Pitot Coefficient:	0.840	**Test Engineer:**	DJK	**Test Tech:**	EMC
Probe Length, Feet:	4	**Port Length, Inches:**	5		

Port	Point	DP (in. H_2O)	Sqrt. DP	Temp (°F)	Velocity (V)	Port	Point	DP (in. H_2O)	Sqrt. DP	Temp (°F)	Velocity (V)
A	1	0.46	0.6782	516.0	53.01	B	1	0.35	0.5916	515.0	46.21
A	2	0.49	0.7000	520.0	54.82	B	2	0.40	0.6325	522.0	49.58
A	3	0.47	0.6856	523.0	53.77	B	3	0.40	0.6325	523.0	49.61
A	4	0.42	0.6481	531.0	51.04	B	4	0.39	0.6245	525.0	49.03
A	5	0.50	0.7071	523.0	55.46	B	5	0.53	0.7280	526.0	57.19
A	6	0.53	0.7280	529.0	57.28	B	6	0.58	0.7616	528.0	59.89
A	7	0.58	0.7616	533.0	60.04	B	7	0.65	0.8062	542.0	63.85
A	8	0.60	0.7746	535.0	61.13	B	8	0.67	0.8185	550.0	65.08

Test Parameters

P_{bar} - Barometric pressure, inches Hg	29.23	% CO_2	0.50
P_g - Stack Pressure, inches of H_2O	0.50	% O_2	19.50
P_s - Absolute stack pressure, inches Hg	29.27	% N_2	80.00
t_s - Average stack temperature, °F	527.6	Md - dry basis lb/lb mole	28.86
Duct Shape:	Circular	Ms - wet basis lb/lb mole	28.154
Diameter, Feet	1.875		
		Bws - Moisture content fraction	**0.065**
Cross Sectional Area of Stack, Ft^2	2.76	Moisture determined by wb/db (Y or N)	N

Method 2 Results

Average DP	0.5013	Q - ACFM	9,177
Average Sqrt DP	0.7049	Qsd - DSCFM	4,488
Average Velocity Vs (ft/sec)	55.418	Qs - SCFM	4,799
		Qs - SCFH	287,969

© Mostardi Platt

METHOD 2 VOLUMETRIC FLOW DATA

Project Number:	M170406	**Operating Level:**	High Inlet Loading		
Client:	East Balt Commissary, LLC	**Run No.:**	4		
Facility:	Chicago, Illinois	**Test Date:**	2/16/2017		
Test Location:	Oxidizer Stack	**Start Time:**	14:04		
Pitot ID:	14	**End Time:**	14:14		
Pitot Coefficient:	0.840	**Test Engineer:**	DJK	**Test Tech:**	EMC
Probe Length, Feet:	4	**Port Length, Inches:**	5		

Port	Point	DP (in. H_2O)	Sqrt. DP	Temp (°F)	Velocity (V)	Port	Point	DP (in. H_2O)	Sqrt. DP	Temp (°F)	Velocity (V)
A	1	0.35	0.5916	521.0	46.37	B	1	0.36	0.6000	523.0	47.08
A	2	0.46	0.6782	523.0	53.22	B	2	0.42	0.6481	531.0	51.06
A	3	0.46	0.6782	523.0	53.22	B	3	0.42	0.6481	532.0	51.08
A	4	0.42	0.6481	525.0	50.90	B	4	0.38	0.6164	535.0	48.66
A	5	0.43	0.6557	532.0	51.69	B	5	0.43	0.6557	522.0	51.43
A	6	0.59	0.7681	542.0	60.85	B	6	0.55	0.7416	526.0	58.28
A	7	0.66	0.8124	545.0	64.46	B	7	0.58	0.7616	533.0	60.06
A	8	0.69	0.8307	545.0	65.90	B	8	0.62	0.7874	534.0	62.13

Test Parameters

P_{bar} - Barometric pressure, inches Hg	29.23	% CO_2	0.50
P_g - Stack Pressure, inches of H_2O	0.50	% O_2	19.50
P_s - Absolute stack pressure, inches Hg	29.27	% N_2	80.00
t_s - Average stack temperature, °F	530.6	Md - dry basis lb/lb mole	28.86
Duct Shape:	Circular	Ms - wet basis lb/lb mole	28.132
Diameter, Feet	1.875		
		Bws - Moisture content fraction	**0.067**
Cross Sectional Area of Stack, Ft^2	2.76	Moisture determined by wb/db (Y or N)	N

Method 2 Results

Average DP	0.4888	Q - ACFM	9,088
Average Sqrt DP	0.6951	Qsd - DSCFM	4,410
Average Velocity Vs (ft/sec)	54.758	Qs - SCFM	4,727
		Qs - SCFH	283,624

© Mostardi Platt

METHOD 2 VOLUMETRIC FLOW DATA

Project Number:	M170406	**Operating Level:**	High Inlet Loading		
Client:	East Balt Commissary, LLC	**Run No.:**	5		
Facility:	Chicago, Illinois	**Test Date:**	2/16/2017		
Test Location:	Oxidizer Stack	**Start Time:**	15:11		
Pitot ID:	14	**End Time:**	15:20		
Pitot Coefficient:	0.840	**Test Engineer:**	DJK	**Test Tech:**	EMC
Probe Length, Feet:	4	**Port Length, Inches:**	5		

Port	Point	DP (In. H_2O)	Sqrt. DP	Temp (°F)	Velocity (V)	Port	Point	DP (In. H_2O)	Sqrt. DP	Temp (°F)	Velocity (V)
A	1	0.54	0.7348	515.0	57.43	B	1	0.36	0.6000	521.0	47.03
A	2	0.52	0.7211	511.0	56.24	B	2	0.36	0.6000	520.0	47.01
A	3	0.54	0.7348	518.0	57.51	B	3	0.38	0.6164	521.0	48.32
A	4	0.42	0.6481	520.0	50.77	B	4	0.44	0.6633	525.0	52.10
A	5	0.43	0.6557	522.0	51.43	B	5	0.42	0.6481	528.0	50.98
A	6	0.48	0.6928	524.0	54.39	B	6	0.53	0.7280	524.0	57.15
A	7	0.55	0.7416	530.0	58.40	B	7	0.51	0.7141	530.0	56.23
A	8	0.56	0.7483	530.0	58.93	B	8	0.60	0.7746	536.0	61.18

Test Parameters

P_{bar} - Barometric pressure, inches Hg	29.23	% CO_2	0.50
P_g - Stack Pressure, Inches of H_2O	0.50	% O_2	19.50
P_s - Absolute stack pressure, Inches Hg	29.27	% N_2	80.00
t_s - Average stack temperature, °F	523.4	Md - dry basis lb/lb mole	28.86
Duct Shape:	Circular	Ms - wet basis lb/lb mole	28.132
Diameter, Feet	1.875		
		Bws - Moisture content fraction	**0.067**
Cross Sectional Area of Stack, Ft^2	2.76	Moisture determined by wb/db (Y or N)	N

Method 2 Results

Average DP	0.4775	Q - ACFM	8,953
Average Sqrt DP	0.6889	Qsd - DSCFM	4,387
Average Velocity Vs (ft/sec)	54.065	Qs - SCFM	4,702
		Qs - SCFH	282,117

© Mostardi Platt

METHOD 4 MOISTURE DETERMINATION

Project Number:	M170406	**Run Number:**		1	
Client:	East Balt Commissary, LLC	**Operating Level:**		High Inlet Loading	
Facility:	Chicago, Illinois	**Time:**	**Start-**	9:45	**End-** 10:30
Test Location:	Oxidizer Stack	**Test Engineer:**		DJK	
Test Date:	2/16/2017	**Test Tech:**		EMC	

Pressure, Barometric(Hg"):	29.23	**Meter Calibration (Y):**	0.980
Delta H:	1.600	**Meter Delta H (dH):**	1.623
Meter Initial Volume:	87.562	**Initial Wt:**	239.2
Meter Final Volume:	108.675	**Final Wt:**	242.7
Meter Temperature:	50.00	**Initial Volume:**	200.0
Meter Volume dscf:	21.011	**Final Volume:**	230.0
		Water Vapor in Flue Gas (Bws):	0.070

Project Number:	M170406	**Run Number:**		2	
Client:	East Balt Commissary, LLC	**Operating Level:**		High Inlet Loading	
Facility:	Chicago, Illinois	**Time:**	**Start-**	12:20	**End-** 13:05
Test Location:	Oxidizer Stack	**Test Engineer:**		DJK	
Test Date:	2/16/2017	**Test Tech:**		EMC	

Pressure, Barometric(Hg"):	29.23	**Meter Calibration (Y):**	0.980
Delta H:	1.600	**Meter Delta H (dH):**	1.623
Meter Initial Volume:	8.826	**Initial Wt:**	232.3
Meter Final Volume:	29.911	**Final Wt:**	236.2
Meter Temperature:	52.00	**Initial Volume:**	230.0
Meter Volume dscf:	20.901	**Final Volume:**	257.0
		Water Vapor in Flue Gas (Bws):	0.065

Project Number:	M170406	**Run Number:**		3	
Client:	East Balt Commissary, LLC	**Operating Level:**		High Inlet Loading	
Facility:	Chicago, Illinois	**Time:**	**Start-**	13:55	**End-** 14:40
Test Location:	Oxidizer Stack	**Test Engineer:**		DJK	
Test Date:	2/16/2017	**Test Tech:**		EMC	

Pressure, Barometric(Hg"):	29.23	**Meter Calibration (Y):**	0.980
Delta H:	1.600	**Meter Delta H (dH):**	1.623
Meter Initial Volume:	30.089	**Initial Wt:**	247.9
Meter Final Volume:	51.231	**Final Wt:**	251.6
Meter Temperature:	53.00	**Initial Volume:**	240.0
Meter Volume dscf:	20.917	**Final Volume:**	268.0
		Water Vapor in Flue Gas (Bws):	0.067

© Mostardi Platt

Method 25A Field Data Sheet

Project:	M170406	Operator:	S Dyra
Client:	East Bolt Commissary, Inc	Source:	1. Proof Box #1
Location:	Proof Box #1		2.
Date:	1/24/17		3.

Parameters	Location 1	Location 2	Location 3
Test 1			
Time	829-929		
VOC ppmv as propane	241.3		
Air flow, scfm			
VOC lbs/hr as			
Removal Efficiency, %			
Test 2			
Time	1039-~~1149~~ 1139		
VOC ppmv as propane	306.5		
Air flow, scfm			
VOC lbs/hr as			
Removal Efficiency, %			
Test 3			
Time	1217-1317		
VOC ppmv as propane	527.9		
Air flow, scfm			
VOC lbs/hr as			
Removal Efficiency, %			

East Bait Commissary, LLC Chicago, Illinois Proof Box #1 Recycled Air Duct Gaseous Summary							
Test No.	Date	Start Time	End Time	THC ppm Outlet as C_3H_8 (wet)	VOC ppm as CH3CH2OH Outlet (wet)	Outlet Flowrate, SCFM	Outlet VOC as CH3CH2OH lb/hr
1	01/24/17	08:29	09:28	236.6	523.6	144.6	0.54
2	01/24/17	10:39	11:38	302.3	669.0	142.9	0.69
3	01/24/17	12:17	13:16	526.8	1,165.8	142.9	1.20
Average				355.2	786.1	143.5	0.81

A response factor of 2.213 was determined to convert THC ppmv as C_3H_8 to VOC ppmv as CH_3CH_2OH for the VIG 20/2 analyzer used at Proof Box #1

© Mostardi Platt

Client: East Balt Commissary, LLC
Facility: Chicago, Illinois
Project #: M170406
Location: Proof Box #1 Recycled Air Duct
Date: 1/24/17

Run 1

Time	THC ppmv outlet
8:29	46.10
8:30	96.00
8:31	86.50
8:32	81.50
8:33	76.20
8:34	75.40
8:35	70.90
8:36	68.30
8:37	67.50
8:38	68.00
8:39	69.50
8:40	71.80
8:41	74.60
8:42	81.30
8:43	87.30
8:44	102.60
8:45	106.70
8:46	115.30
8:47	124.00
8:48	130.40
8:49	136.50
8:50	144.20
8:51	154.80
8:52	166.20
8:53	175.70
8:54	185.10
8:55	193.20
8:56	199.70
8:57	207.30
8:58	218.90
8:59	229.00
9:00	237.90
9:01	246.70
9:02	253.30
9:03	260.40
9:04	267.90
9:05	276.10
9:06	284.90
9:07	293.60
9:08	302.60
9:09	311.30
9:10	319.50
9:11	331.60
9:12	343.30
9:13	350.90
9:14	361.50
9:15	373.20
9:16	382.70
9:17	391.00
9:18	396.80
9:19	407.60
9:20	414.20
9:21	425.00
9:22	433.70
9:23	442.60
9:24	449.60
9:25	463.40
9:26	474.50
9:27	486.50
9:28	501.40
Average	**236.60**
Min	**46.10**
Max	**501.40**

© Mostardi Platt

Client: East Balt Commissary, LLC
Facility: Chicago, Illinois
Project #: M170406
Location: Proof Box #1 Recycled Air Duct
Date: 1/24/17

Run 2

Time	THC ppmv outlet
10:39	286.80
10:40	275.10
10:41	262.10
10:42	246.90
10:43	229.90
10:44	212.80
10:45	198.40
10:46	187.40
10:47	178.70
10:48	172.30
10:49	167.40
10:50	164.30
10:51	162.50
10:52	162.30
10:53	164.20
10:54	169.40
10:55	175.90
10:56	180.80
10:57	185.00
10:58	187.90
10:59	193.40
11:00	199.00
11:01	207.20
11:02	215.40
11:03	223.50
11:04	229.80
11:05	236.20
11:06	241.10
11:07	249.40
11:08	257.70
11:09	268.10
11:10	277.70
11:11	285.60
11:12	290.90
11:13	295.00
11:14	299.90
11:15	310.80
11:16	321.10
11:17	330.80
11:18	339.90
11:19	347.80
11:20	356.10
11:21	364.60
11:22	375.70
11:23	390.30
11:24	401.90
11:25	411.10
11:26	415.80
11:27	423.10
11:28	430.00
11:29	446.00
11:30	461.60
11:31	473.00
11:32	487.10
11:33	494.50
11:34	502.10
11:35	512.10
11:36	521.70
11:37	534.80
11:38	546.10
Average	302.30
Min	162.30
Max	548.10

© Mostardi Platt

Client: East Balt Commissary, LLC
Facility: Chicago, Illinois
Project #: M170406
Location: Proof Box #1 Recycled Air Duct
Date: 1/24/17

Run 3

Time	THC ppmv outlet
12:17	598.80
12:18	590.50
12:19	583.70
12:20	576.90
12:21	571.50
12:22	566.20
12:23	558.30
12:24	548.70
12:25	539.60
12:26	531.40
12:27	526.40
12:28	529.50
12:29	535.90
12:30	539.90
12:31	544.40
12:32	535.60
12:33	531.90
12:34	532.40
12:35	532.50
12:36	530.50
12:37	527.80
12:38	524.30
12:39	521.30
12:40	518.00
12:41	512.60
12:42	511.00
12:43	511.70
12:44	511.90
12:45	509.90
12:46	510.00
12:47	509.60
12:48	509.20
12:49	510.40
12:50	509.70
12:51	507.40
12:52	505.30
12:53	501.40
12:54	495.10
12:55	490.80
12:56	486.70
12:57	483.40
12:58	481.70
12:59	482.90
13:00	484.80
13:01	487.40
13:02	491.40
13:03	497.20
13:04	503.60
13:05	508.80
13:06	512.60
13:07	517.40
13:08	522.00
13:09	528.50
13:10	535.20
13:11	543.30
13:12	551.20
13:13	559.80
13:14	567.60
13:15	574.50
13:16	582.80
Average	**526.80**
Min	481.70
Max	598.80

© Mostardi Platt

Appendix F - Field Data Sheets

© Mostardi Platt

Volumetric Flow Rate Determination Field Data Sheet

Project Number:	M170406	Date:	1-26-17
Client:	EastBalt Commissary, Inc	Test Number:	Pre-1
Test Location:	Oxidizer Inlet	Start Time:	935
Source Condition:	~~Normal~~ ~~Mid~~ ~~Low~~ Inlet Loading	End Time:	941
Test Engineer:	JEA Mid	Test Tech:	LCM

Duct Diameter 1.83 ft
Flue Area 2.6[illegible] ft²
Port Length 2 "
P_{bar} 29.16 "Hg
Static -1.5 "H_2O
Static ____ "Hg
P_s 28.99 "Hg

CO_2 % 5
O_2 % 19.50
N_2 % 80
Meter No.CM 6

Upstream Disturbance, Diameters 73"
Downstream Disturbance, Diameters 81"
Pitot ID 080
Pitot Coefficient (C_p) 0.840
Wet Bulb Temp ____
Dry Bulb Temp ____
B_{ws} 0.151
Fluke # ____

Leak Checks Passed@
Pre ✓ @ 4 Inches H_2O
Post ✓ @ 5 Inches H_2O
Umbilical ID ____

Port-Point #	ΔP	Temp. °F	$\sqrt{\Delta P}$	Null Point Angle, Degrees	Port-Point #	ΔP	Temp. °F	$\sqrt{\Delta P}$	Null Point Angle, Degrees
1-1	.31	318							
2	.33	317							
3	.27	317							
4	.15	316							
5	.21	316							
6	.17	316							
7	.20	316							
8	.14	314							
2-1	.33	318							
2	.31	316							
3	.28	316							
4	.17	316							
5	.20	314							
6	.15	314							
7	.18	312							
8	.16	312							
Average									

44 x CO_2% + .32 x O_2% + .28 x N_2% = _____ (Md)

(_____ Md x _____ 1-Bws) + (18 x _____ Bws) = _____ (Ms)

85.49 x ____ Cp x $\sqrt{\frac{(\_\_\_\_\_)\ Ts\ °R}{\_\_\_\_ Ms \times \_\_\_\_ Ps}}$ x ____ $\sqrt{\Delta P}$ = ____ ft/sec (Vs)

_____ Vs x _____ Flue Area x 60 = _____ acfm

17.647 x _____ acfm x $\frac{Ps}{Ts\ °R}$ = _____ scfm x 60 = _____ scfh

© Mostardi Platt

Volumetric Flow Rate Determination Field Data Sheet

Project Number:	M170406	Date:	~~01-24-17~~ 1-26-17
Client:	EastBalt Commissary, Inc	Test Number:	Post 1/Pie 2
Test Location:	Oxidizer Inlet	Start Time:	1103
Source Condition:	Normal ~~Mid~~ ~~Inlet~~ Inlet Cond.	End Time:	1109
Test Engineer:	JEA Mid	Test Tech:	LCM

Duct Diameter 1.83 ft
Flue Area 2.63 ft²
Port Length 2 "
29.10 P_{bar} "Hg
Static -1.5 "H_2O
Static "Hg
P_s 25.99 "Hg

CO_2 % 5
O_2 % 19.50
N_2 % 80
Meter No.CM 6

Upstream Disturbance, Diameters 73"
Downstream Disturbance, Diameters 81"
Pitot ID 080
Pitot Coefficient (C_p) 0.840
Wet Bulb Temp
Dry Bulb Temp
B_{ws} 0.151
Fluke #

Leak Checks Passed@
Pre 1.84 Inches H_2O
Post 1.65 Inches H_2O
Umbilical ID

Port-Point #	ΔP	Temp. °F	$\sqrt{\Delta P}$	Null Point Angle, Degrees	Port-Point #	ΔP	Temp. °F	$\sqrt{\Delta P}$	Null Point Angle, Degrees
1-1	.36	325							
2	.38	323							
3	.25	321							
4	.17	320							
5	.24	323							
6	.16	318							
7	.20	317							
8	.16	316							
2-1	.31	321							
2	.34	321							
3	.27	319							
4	.22	318							
5	.24	316							
6	.16	315							
7	.19	314							
8	.17	314							
Average									

44 x CO_2% + .32 x O_2% + .28 x N_2% = _____ (Md)

(_____ Md x _____ 1-Bws) + (18 x _____ Bws) = _____ (Ms)

85.49 × ____Cp × $\sqrt{\frac{(\_\_\_\_\_)Ts\ °R}{\_\_\_Ms \times \_\_\_Ps}}$ × ____ $\sqrt{\Delta P}$ = ____ ft/sec (Vs)

_____ Vs × _____ Flue Area × 60 = _____ acfm

17.647 × _____ acfm × $\frac{Ps}{Ts\ °R}$ = _____ scfm x 60 = _____ scfh

© Mostardi Platt

Volumetric Flow Rate Determination Field Data Sheet

Project Number:	M170406	Date:	1-26-17
Client:	EastBalt Commissary Inc	Test Number:	Pie 7
Test Location:	Oxidizer Inlet	Start Time:	1224
Source Condition:	~~Normal~~ ~~Mid~~ ~~Low~~ Inlet Loading	End Time:	1231
Test Engineer:	JEA Mid	Test Tech:	LCM

Duct Diameter 1.83 ft
Flue Area 2.63 ft²
Port Length 2 "
Upstream Disturbance, Diameters 73"
Downstream Disturbance, Diameters 81"
Pitot ID 080
Pitot Coefficient (C_p) 0.840

P_{bar} 29.10 "Hg
Static -1.5 "H_2O
Static "Hg
P_s 28.99 "Hg

CO_2 % .50
O_2 % 19.50
N_2 % 80
Meter No. CM 6

Wet Bulb Temp
Dry Bulb Temp
B_{ws} 0.026
Fluke #

Leak Checks Passed@
Pre Yes Inches H_2O
Post Yes Inches H_2O
Umbilical ID

Port-Point #	ΔP	Temp. °F	$\sqrt{\Delta P}$	Null Point Angle, Degrees	Port-Point #	ΔP	Temp. °F	$\sqrt{\Delta P}$	Null Point Angle, Degrees
1-1	.35	306							
2	.33	308							
3	.24	309							
4	.26	307							
5	.22	303							
6	.20	311							
7	.11	304							
8	.10	301							
2-1	.37	307							
2	.32	305							
3	.26	301							
4	.24	300							
5	.21	300							
6	.19	298							
7	.13	297							
8	.10	297							
Average									

44 x CO_2% + .32 x O_2% + .28 x N_2% = _____ (Md)

(_____ Md x _____ 1-Bws) + (18 x _____ Bws) = _____ (Ms)

$$85.49 \times \_\_\_ Cp \times \sqrt{\frac{(\_\_\_\_\_)\ Ts\ °R}{\_\_\_ Ms \times \_\_\_ Ps}} \times \_\_\_ \sqrt{\Delta P} = \_\_\_ \text{ ft/sec (Vs)}$$

_____ Vs x _____ Flue Area x 60 = _____ acfm

$$17.647 \times \_\_\_ \text{acfm} \times \frac{Ps}{Ts\ °R} = \_\_\_\_\_ \text{ scfm x 60} = \_\_\_\_\_ \text{ scfh}$$

© Mostardi Platt

Volumetric Flow Rate Determination Field Data Sheet

Project Number:	M170406	Date:	~~01-24-17~~ 1-25-17
Client:	EastBalt Commissary, Inc	Test Number:	Pos+2 / Pos 3
Test Location:	Oxidizer Inlet	Start Time:	1309
Source Condition:	~~Normal~~ Mid ~~Low~~ Inlet Loading	End Time:	1316
Test Engineer:	JEA Mid	Test Tech:	LCM

Duct Diameter 1.83 ft
Flue Area 2.63 ft²
Port Length 2 "

Upstream Disturbance, Diameters 73"
Downstream Disturbance, Diameters 81"
Pitot ID 080 Pitot Coefficient (C_p) 0.840

29.80 P_{bar} ~~28.79~~ "Hg
Static 1.5 "H_2O
Static ____ "Hg
P_s 28.99 "Hg

CO_2 % .50
O_2 % 18.50
N_2 % 80
Meter No. CM 6

Wet Bulb Temp ____
Dry Bulb Temp ____
B_{ws} 0.149
Fluke # ____

Leak Checks Passed @
Pre 1.5 Inches H_2O
Post 1.06 Inches H_2O
Umbilical ID ____

Port-Point #	ΔP	Temp. °F	$\sqrt{\Delta P}$	Null Point Angle, Degrees	Port-Point #	ΔP	Temp. °F	$\sqrt{\Delta P}$	Null Point Angle, Degrees
1-1	.38	310							
2	.31	307							
3	.27	305							
4	.20	301							
5	.21	306							
6	.24	310							
7	.13	303							
8	.11	302							
2-1	.40	310							
2	.36	306							
3	.23	305							
4	.21	303							
5	.18	301							
6	.14	297							
7	.13	295							
8	.08	293							
Average									

44 x CO_2% + .32 x O_2% + .28 x N_2% = _____ (Md)

(_____ Md x _____ 1-Bws) + (18 x _____ Bws) = _____ (Ms)

$$85.49 \times \_\_\_ Cp \times \sqrt{\frac{(\_\_\_)\,Ts\ °R}{\_\_\_ Ms \times \_\_\_ Ps}} \times \_\_\_ \sqrt{\Delta P} = \_\_\_ \text{ ft/sec (Vs)}$$

_____ Vs x _____ Flue Area x 60 = _____ acfm

$$17.647 \times \_\_\_ \text{acfm} \times \frac{Ps}{Ts\ °R} = \_\_\_ \text{ scfm x 60} = \_\_\_ \text{ scfh}$$

© Mostardi Platt

Volumetric Flow Rate Determination Field Data Sheet

Project Number:	M170406	Date:	~~01-24-17~~ 1-26-17
Client:	EastBalt Commissary, Inc	Test Number:	Pcst 3
Test Location:	Oxidizer Inlet	Start Time:	1504
Source Condition:	~~Normal~~ Mid ~~Low~~ Inlet Loading	End Time:	1510
Test Engineer:	JEA Mid	Test Tech:	LCM

Duct Diameter 1.83 ft
Flue Area 2.63 ft²
Port Length 2 "
P_{bar} 29.00 "Hg
Static 1.50 "H_2O
Static ____ "Hg
P_s 28.99 "Hg

CO_2 % .50
O_2 % 20.50
N_2 % 80
Meter No. CM 6

Upstream Disturbance, Diameters 73"
Downstream Disturbance, Diameters 81"
Pitot ID 080 Pitot Coefficient (C_p) 0.840
Wet Bulb Temp ____
Dry Bulb Temp ____
B_{ws} 0.153
Fluke # ____

Leak Checks Passed@
Pre ✓ Inches H_2O
Post ✓ Inches H_2O
Umbilical ID ___

Port-Point #	ΔP	Temp. °F	$\sqrt{\Delta P}$	Null Point Angle, Degrees	Port-Point #	ΔP	Temp. °F	$\sqrt{\Delta P}$	Null Point Angle, Degrees
1-1	.40	321							
2	.34	320							
3	.26	319							
4	.23	317							
5	.22	317							
6	.18	314							
7	.17	310							
8	.13	302							
2-1	.42	310							
2	.35	307							
3	.24	305							
4	.20	305							
5	.17	303							
6	.15	299							
7	.12	296							
8	.09	291							
Average									

44 x CO_2% + .32 x O_2% + .28 x N_2% = _____ (Md)

(_____ Md x _____ 1-Bws) + (18 x _____ Bws) = _____ (Ms)

$$85.49 \times \_\_\_ Cp \times \sqrt{\frac{(\_\_\_\_\_)Ts\ °R}{\_\_\_ Ms \times \_\_\_ Ps}} \times \_\_\_ \sqrt{\Delta P} = \_\_\_ \text{ ft/sec (Vs)}$$

_____ Vs x _____ Flue Area x 60 = _____ acfm

$$17.647 \times \_\_\_ \text{acfm} \times \frac{Ps}{Ts\ °R} = \_\_\_ \text{ scfm} \times 60 = \_\_\_ \text{ scfh}$$

© Mostardi Platt

MOISTURE FIELD DATA SHEET

1/26/17

Project Name/Number: M170406 EastBalt Commissary Date: ~~4/24/17~~
Test Location: Oxidizer Inlet Source Condition: ~~Normal~~ Mid
Test Method: 4 Meter ID: CM_6 Pre-Calibration Date: 01/13/17
Meter ΔH: 1.610 Meter Y: 0.993 Test Engineer: JEA

Test (Run) No. 1 Barometric Pressure (P_{bar}) ~~29.06~~ 29.10 in. Hg
Static Pressure: -1.5 Stack Temperature: 305 (From Method 2 Test Data)
Gas Sample Analysis: 6.5 %CO_2 19.5 %O_2

Clock Time 24 hour	Meter Volume (Vm) ft3 or L (Circle One)	Meter Gage Pressure (ΔH) in. H_2O	Meter Inlet Temp. (t_m) °F	Meter Outlet Temp. (t_m) °F	Impinger Outlet Temp °F	Meter Vacuum "Hg
1012	~~77.920~~	1.610	35	35		1
1017	~~80.~~ 81.160		36	35		1
1022	84.920		36	36		1
1027	88.630		36	35		1
1032	92.470		38	35		1
1037	96.180		39	36		1
1042	99.990		41	36		2
1047	103.930		43	36		2
1052	107.640		45	37		2
1057	111.436		45	37		2

Total Vol. in ft3 (Vm)= 34.116 Multiply total volume collected in Liters by 0.035315 to convert to ft^3

Condensate: ~~260~~ 325 / / mls (V_f); -200 / / mls (V_i); = ~~60~~ 125 mls gained

Silica Gel or Train: 240.2 grams (W_f); -232.2 grams (W_i); = 8.0 grams gained

Average Meter Temperature: 37.65 (average of both inlet and outlet if applicable)

.151 BWS

75% total

Comments:

Pre-Test Leak Check: 0 @ 5 "Hg
Post-Test Leak Check: 0 @ 7 "Hg

Test (Run) No. 2 Barometric Pressure (P_{bar}) ~~29.06~~ 29.10 in. Hg
Static Pressure: -1.5 Stack Temperature: 305 (From Method 2 Test Data)
Gas Sample Analysis: 6.5 %CO_2 19.5 %O_2

Clock Time 24 hour	Meter Volume (Vm) ft3 or L (Circle One)	Meter Gage Pressure (ΔH) in. H_2O	Meter Inlet Temp. (t_m) °F	Meter Outlet Temp. (t_m) °F	Impinger Outlet Temp °F	Meter Vacuum "Hg
1215	111.872	~~1.610~~	38	38		1
1220	115.710		39	38		1
1225	119.430		41	39		1
1230	123.180		41	39		1
1235	126.930		41	39		2
1240	130.690		42	40		2
1245	134.410		43	40		2
1250	138.170		44	41		2
1255	141.930		45	41		2
130	145.949		45	41		2

Total Vol. in ft3 (Vm)= 33.877 Multiply total volume collected in Liters by 0.035315 to convert to ft^3

Condensate: 445 / / mls (V_f); -325 / / mls (V_i); = 120 mls gained

Silica Gel or Train: 246.1 grams (W_f); -240.2 grams (W_i); = 5.9 grams gained

Average Meter Temperature: 40.75 (average of both inlet and outlet if applicable)

.146 BWS

Comments:

Pre-Test Leak Check: 0 @ 5 "Hg
Post-Test Leak Check: 0 @ 6 "Hg

228
165
0

6.1

© Mostardi Platt

MOISTURE FIELD DATA SHEET

1/26/17

Project Name/Number: M170406 EastBalt Commissary Date: ~~1/24/17~~
Test Location: Oxidizer Inlet Source Condition: ~~Normal~~ M.d
Test Method: 4 Meter ID: CM_6 Pre-Calibration Date: 01/13/17
Meter ΔH: 1.610 Meter Y: 0.993 Test Engineer: JEA

Test (Run) No. 3 Barometric Pressure (P_{bar}) 29.10 in. Hg
Static Pressure: 1.5 Stack Temperature: 305 (From Method 2 Test Data)

Gas Sample Analysis: 0.5 %CO_2 19.6 %O_2

Clock Time 24 hour	Meter Volume (Vm) ft3 or L (Circle One)	Meter Gage Pressure (ΔH) in. H_2O	Meter Inlet Temp. (t_m) °F	Meter Outlet Temp. (t_m) °F	Impinger Outlet Temp °F	Meter Vacuum "Hg
1355	146.151	1.610	40	40		1
1400	149.970		41	40		1
1405	153.730		41	40		1
1410	157.516		42	41		1
1415	161.230		42	41		2
1420	164.970		43	41		2
1425	168.730		44	41		2
1430	172.480		44	42		2
1435	176.250		45	42		2
1440	180.038		45	42		2
Total Vol. in ft3 (Vm)=	33.887	Multiply total volume collected in Liters by 0.035315 to convert to ft^3				

Condensate: 579 / ___ mls (V_f) − 445 / ___ mls (V_i) = 125 mls gained

Silica Gel or Train: 253.9 grams (W_f) − 246.1 grams (W_i) = 7.8 grams gained

Average Meter Temperature: 41.85
(average of both inlet and outlet if applicable)

.153 BWS

Comments:

Pre-Test Leak Check: 0 @ 4 "Hg

Post-Test Leak Check: 0 @ 5 "Hg

Test (Run) No. ___ Barometric Pressure (P_{bar}) ___ in. Hg
Static Pressure: ___ Stack Temperature: ___ (From Method ___ Test Data)

Gas Sample Analysis: ___ %CO_2 ___ %O_2

Clock Time 24 hour	Meter Volume (Vm) ft3 or L (Circle One)	Meter Gage Pressure (ΔH) in. H_2O	Meter Inlet Temp. (t_m) °F	Meter Outlet Temp. (t_m) °F	Impinger Outlet Temp °F	Meter Vacuum "Hg
Total Vol. in ft3 (Vm)=		Multiply total volume collected in Liters by 0.035315 to convert to ft^3				

Condensate: ___ / ___ / ___ mls (V_f) − ___ / ___ / ___ mls (V_i) = ___ mls gained

Silica Gel or Train: ___ grams (W_f) − ___ grams (W_i) = ___ grams gained

Average Meter Temperature: ___
(average of both inlet and outlet if applicable)

Comments:

Pre-Test Leak Check: ___ @ ___ "Hg

Post-Test Leak Check: ___ @ ___ "Hg

© Mostardi Platt

Volumetric Flow Rate Determination Field Data Sheet

Project Number:	M170406	Date:	1-26-17
Client:	EastBalt Commissary, Inc.	Test Number:	Pre 1
Test Location:	Oxidizer Outlet	Start Time:	945
Source Condition:	~~Normal~~ ~~Mid~~ ~~Low~~ Inlet Loading	End Time:	951
Test Engineer:	JEA Mid	Test Tech:	LCM

Duct Diameter 1.87 ft
Flue Area 2.75 ft²
Port Length 5 "
P_{bar} 29.00 "Hg
Static 7.50 "H_2O
Static ___ "Hg
P_s 29.00 "Hg

CO_2 % 1.50
O_2 % 19.50
N_2 % 80
Meter No.CM10

Upstream Disturbance, Diameters > 2
Downstream Disturbance, Diameters 107"
Pitot ID 080
Pitot Coefficient (C_p) 0.840

Wet Bulb Temp ___
Dry Bulb Temp ___
B_{ws} 0.079
Fluke # ___

Leak Checks Passed@
Pre 12.4 Inches H_2O
Post 12.5 Inches H_2O
Umbilical ID ___

Port-Point #	ΔP	Temp. °F	$\sqrt{\Delta P}$	Null Point Angle, Degrees	Port-Point #	ΔP	Temp. °F	$\sqrt{\Delta P}$	Null Point Angle, Degrees
1-1	.41	449							
2	.44	451							
3	.43	455							
4	.41	465							
5	.40	470							
6	.45	475							
7	.51	490							
8	.72	485							
2-1	.40	455							
2	.45	448							
3	.42	455							
4	.40	470							
5	.38	470							
6	.46	481							
7	.55	490							
8	.69	480							
Average									

44 x CO_2% + .32 x O_2% + .28 x N_2% = _____ (Md)

(_____ Md x _____1-Bws) + (18 x_____Bws) = _____ (Ms)

85.49 × ____Cp × $\sqrt{\frac{(\_\_\_\_)Ts\ °R}{\_\_\_\_Ms \times \_\_\_\_Ps}}$ × ____ $\sqrt{\Delta P}$ = ____ ft/sec (Vs)

_____ Vs x _____ Flue Area x 60 = _____acfm

17.647 × _____acfm × $\frac{Ps}{Ts\ °R}$ = _____ scfm x 60 = _____ scfh

© Mostardi Platt

Volumetric Flow Rate Determination Field Data Sheet

Project Number:	M170406	Date:	1-28-17
Client:	EastBalt Commissary, Inc	Test Number:	Post 1/Pre 2
Test Location:	Oxidizer Outlet	Start Time:	1113
Source Condition:	Normal Mid ~~Low~~ Inlet Load.	End Time:	1119
Test Engineer:	JEA M.d	Test Tech:	LCM

Duct Diameter 1.87 ft
Flue Area 2.75 ft²
Port Length 5 "
Upstream Disturbance, Diameters > 2
Downstream Disturbance, Diameters 107"
Pitot ID 080
Pitot Coefficient (C_p) 0.840

P_{bar} 29.00 "Hg
Static -.30 "H_2O
Static ____ "Hg
P_s 29.06 "Hg

CO_2 % .50
O_2 % 19.80
N_2 % 80
Meter No. CM10

Wet Bulb Temp ____
Dry Bulb Temp ____
B_{ws} 0.079
Fluke # ____

Leak Checks Passed@
Pre ✓ Inches H_2O
Post ✓ Inches H_2O
Umbilical ID ____

Port-Point #	ΔP	Temp. °F	$\sqrt{\Delta P}$	Null Point Angle, Degrees	Port-Point #	ΔP	Temp. °F	$\sqrt{\Delta P}$	Null Point Angle, Degrees
1-1	.45	461							
2	.39	462							
3	.37	464							
4	.42	471							
5	.44	473							
6	.47	477							
7	.53	472							
8	.66	476							
2-1	.44	464							
2	.47	461							
3	.41	455							
4	.39	461							
5	.35	465							
6	.48	470							
7	.59	476							
8	.64	483							
Average									

44 x CO_2% + .32 x O_2% + .28 x N_2% = _____ (Md)

(_____ Md x _____ 1-Bws) + (18 x _____ Bws) = _____ (Ms)

$$85.49 \times \_\_\_ Cp \times \sqrt{\frac{(\_\_\_\_\_)Ts\ °R}{\_\_\_ Ms \times \_\_\_ Ps}} \times \_\_\_ \sqrt{\Delta P} = \_\_\_ \text{ ft/sec (Vs)}$$

_____ Vs x _____ Flue Area x 60 = _____ acfm

$$17.647 \times \_\_\_ \text{acfm} \times \frac{Ps}{Ts\ °R} = \_\_\_ \text{ scfm x 60} = \_\_\_ \text{ scfh}$$

© Mostardi Platt

Volumetric Flow Rate Determination Field Data Sheet

Project Number:	M170406	Date:	1-26-17
Client:	EastBalt Commissary, Inc.	Test Number:	Pre2
Test Location:	Oxidizer Outlet	Start Time:	1215
Source Condition:	Normal Mid ~~low~~ Inlet Loading	End Time:	1220
Test Engineer:	JEA Mid	Test Tech:	LCM

Duct Diameter __1.87__ ft
Flue Area __2.75____ ft²
Port Length __5____"
P_{bar} 29.10 "Hg
Static -.50 "H_2O
Static _____ "Hg
P_s 29.00 "Hg

CO_2 % .50
O_2 % 19.50
N_2 % 80
Meter No.CM10

Upstream Disturbance, Diameters > 2_____
Downstream Disturbance, Diameters 107"_____
Pitot ID_080___ Pitot Coefficient (C_p) _0.840___
Wet Bulb Temp _____
Dry Bulb Temp _____
B_{ws} 0.093
Fluke # _____

Leak Checks Passed@
Pre 0 Inches H_2O
Post 0 Inches H_2O
Umbilical ID ___

Port-Point #	ΔP	Temp. °F	$\sqrt{\Delta P}$	Null Point Angle, Degrees	Port-Point #	ΔP	Temp. °F	$\sqrt{\Delta P}$	Null Point Angle, Degrees
1-1	.42	469							
2	.45	476							
3	.48	481							
4	.47	486							
5	.44	490							
6	.51	467							
7	.69	460							
8	.73	457							
2-1	.41	474							
2	.47	481							
3	.49	467							
4	.44	463							
5	.55	471							
6	.72	463							
7	.70	461							
8	.66	460							
Average									

44 x CO_2% + .32 x O_2% + .28 x N_2% = _____ (Md)

(_____ Md x _____1-Bws) + (18 x_____Bws) = _____ (Ms)

85.49 x ___Cp x $\sqrt{\frac{(\_\_\_\_\_)Ts\ °R}{\_\_\_Ms \times \_\_\_Ps}}$ x ___ $\sqrt{\Delta P}$ = ___ ft/sec (Vs)

_____ Vs x _____ Flue Area x 60 = _____acfm

17.647 x _____acfm x $\frac{Ps}{Ts\ °R}$ = _____ scfm x 60 = _____ scfh

© Mostardi Platt

Volumetric Flow Rate Determination Field Data Sheet

Project Number:	M170406	Date:	1-29-17
Client:	EastBalt Commissary Inc.	Test Number:	Post 2 / Pre 3
Test Location:	Oxidizer Outlet	Start Time:	1300
Source Condition:	~~Normal~~ Mid Inlet loading	End Time:	1306
Test Engineer:	JEA Mid	Test Tech:	LCM

Duct Diameter 1.87 ft
Flue Area 2.75 ft²
Port Length 5 "
P_{bar} 29.10 "Hg
Static -.50 "H_2O
Static ____ "Hg
P_s 29.06 "Hg

CO_2 % .50
O_2 % 19.50
N_2 % 80
Meter No.CM10

Upstream Disturbance, Diameters > 2
Downstream Disturbance, Diameters 107"
Pitot ID 080
Pitot Coefficient (C_p) 0.840
Wet Bulb Temp ____
Dry Bulb Temp ____
B_{ws} 0.043
Fluke # ____

Leak Checks Passed@
Pre .195 Inches H_2O
Post .206 Inches H_2O
Umbilical ID ___

Port-Point #	ΔP	Temp. °F	√ΔP	Null Point Angle, Degrees	Port-Point #	ΔP	Temp. °F	√ΔP	Null Point Angle, Degrees
1-1	.41	472	~~472~~						
2	.44	476	~~476~~						
3	.46	483	~~483~~						
4	.43	494	~~494~~						
5	.50	461	~~461~~						
6	.66	460	~~460~~						
7	.67	455	~~455~~						
8	.71	451	~~451~~						
2-1	.39	480	~~480~~						
2	.45	483	~~483~~						
3	.51	462	~~462~~						
4	.57	460	~~460~~						
5	.59	474	~~474~~						
6	[illegible]	461	~~461~~						
7	[illegible]	455	~~455~~						
8	[illegible]	452	~~452~~						
Average									

44 x CO_2% + .32 x O_2% + .28 x N_2% = _____ (Md)

(_____ Md x _____1-Bws) + (18 x_____Bws) = _____ (Ms)

$$85.49 \times \_\_\_\_ Cp \times \sqrt{\frac{(\_\_\_\_\_)Ts\ °R}{\_\_\_\_ Ms \times \_\_\_\_ Ps}} \times \_\_\_\_ \sqrt{\Delta P} = \_\_\_\_ \text{ ft/sec (Vs)}$$

_____ Vs x _____ Flue Area x 60 = _____acfm

$$17.647 \times \_\_\_\_ acfm \times \frac{Ps}{Ts\ °R} = \_\_\_\_\_ scfm \times 60 = \_\_\_\_\_ scfh$$

© Mostardi Platt

Volumetric Flow Rate Determination Field Data Sheet

Project Number:	M170406	Date:	1-26-17
Client:	EastBalt Commissary, Inc	Test Number:	Post 3
Test Location:	Oxidizer Outlet	Start Time:	1513
Source Condition:	~~Normal~~ ~~Mid~~ ~~Low~~ Inlet Loading	End Time:	1519
Test Engineer:	JEA Mid	Test Tech:	LCM

Duct Diameter 1.87 ft
Flue Area 2.75 ft²
Port Length 5 "
P_{bar} 29.06 "Hg
-.50 Static [illegible] "H_2O
Static ____ "Hg
P_s 29.06 "Hg

CO_2 % .58
O_2 % 19.58
N_2 % 80
Meter No.CM10

Upstream Disturbance, Diameters > 2
Downstream Disturbance, Diameters 107"
Pitot ID 080
Pitot Coefficient (C_p) 0.840

Wet Bulb Temp ____
Dry Bulb Temp ____
B_{ws} 0.099
Fluke # ____

Leak Checks Passed@
Pre [illegible] Inches H_2O
Post YES Inches H_2O
Umbilical ID ___

Port-Point #	ΔP	Temp. °F	$\sqrt{\Delta P}$	Null Point Angle, Degrees	Port-Point #	ΔP	Temp. °F	$\sqrt{\Delta P}$	Null Point Angle, Degrees
1-1	.42	481							
2	.45	476							
3	.47	464							
4	.42	462							
5	.51	460							
6	.69	456							
7	.66	454							
8	.69	450							
2-1	.41	483							
2	.47	477							
3	.53	460							
4	.60	454							
5	.68	451							
6	.72	450							
7	.76	450							
8	.64	447							
Average									

44 x CO_2% + .32 x O_2% + .28 x N_2% = _____ (Md)

(_____ Md x _____ 1-Bws) + (18 x _____ Bws) = _____ (Ms)

$$85.49 \times \_\_\_ Cp \times \sqrt{\frac{(\_\_\_\_\_)Ts\ °R}{\_\_\_ Ms \times \_\_\_ Ps}} \times \_\_\_ \sqrt{\Delta P} = \_\_\_ \text{ ft/sec (Vs)}$$

_____ Vs x _____ Flue Area x 60 = _____ acfm

$$17.647 \times \_\_\_ \text{acfm} \times \frac{Ps}{Ts\ °R} = \_\_\_\_\_ \text{ scfm x 60} = \_\_\_\_\_ \text{ scfh}$$

© Mostardi Platt

MOISTURE FIELD DATA SHEET

Project Name/Number: M170406 EastBalt Commissary Date: ~~1/24/17~~ 1/26/17
Test Location: Oxidizer Outlet Source Condition: ~~Normal~~ Mid
Test Method: 4 Meter ID: CM_10 Pre-Calibration Date: 01/05/17
Meter ΔH: 1.537 Meter Y: 1.015 Test Engineer: JEA

Test (Run) No. 1 Barometric Pressure (P_{bar}) 29.40 Hg
Static Pressure: .50 Stack Temperature: 465 (From Method 2 Test Data)
Gas Sample Analysis: 0.5 %CO_2 19.5 %O_2

Clock Time 24 hour	Meter Volume (Vm) ft3 or L (Circle One)	Meter Gage Pressure (ΔH) in. H_2O	Meter Inlet Temp. (t_m) °F	Meter Outlet Temp. (t_m) °F	Impinger Outlet Temp °F	Meter Vacuum "Hg
1012	14.420	1.537	35	35		1
1017	21.230		36	35		1
1022	25.670		36	35		2
1027	28.910		37	35		2
1032	32.620		38	35		2
1037	36.380		38	35		2
1042	40.160		39	36		2
1047	44.020		41	36		2
1052	47.830		42	37		2
1057	51.640		42	37		2
Total Vol. in ft3 (Vm)=	34.22	Multiply total volume collected in Liters by 0.035315 to convert to ft³				

Condensate: 260 / / mls (V_f); - 200 / / mls (V_i); = 60 mls gained

Silica Gel or Train: 253.8 grams (W_f); - 249.5 grams (W_i); = 4.3 grams gained

Average Meter Temperature: 37.0
(average of both inlet and outlet if applicable)

740 Total

.078 BWS

260

Comments:

Pre-Test Leak Check: 0 @ 5 "Hg
Post-Test Leak Check: 0 @ 6 "Hg

Test (Run) No. 2 Barometric Pressure (P_{bar}) 29.40 in. Hg
Static Pressure: .50 Stack Temperature: 465 (From Method 2 Test Data)
Gas Sample Analysis: 0.5 %CO_2 19.5 %O_2

Clock Time 24 hour	Meter Volume (Vm) ft3 or L (Circle One)	Meter Gage Pressure (ΔH) in. H_2O	Meter Inlet Temp. (t_m) °F	Meter Outlet Temp. (t_m) °F	Impinger Outlet Temp °F	Meter Vacuum "Hg
1215	52.110	1.537	39	39		1
1220	55.916		39	39		1
1225	59.640		40	39		1
1230	63.390		41	39		1
1235	67.180		42	40		1
1240	70.920		44	40		1
1245	74.640		44	40		1
1250	78.420		45	41		1
1255	82.190		45	41		1
1300	85.933		46	41		1
Total Vol. in ft3 (Vm)=	33.823	Multiply total volume collected in Liters by 0.035315 to convert to ft³				

Condensate: 330 / / mls (V_f); - 260 / / mls (V_i); = 70 mls gained

Silica Gel or Train: 260.2 grams (W_f); - [redacted] grams (W_i) 253.3; = 6.9 grams gained

Average Meter Temperature: 41.2
(average of both inlet and outlet if applicable)

.093 BWS

Comments:

Pre-Test Leak Check: 0 @ 4 "Hg
Post-Test Leak Check: 0 @ 6 "Hg

4.1°

© Mostardi Platt

1515

MOISTURE FIELD DATA SHEET

1/26/17

Project Name/Number: M170406 EastBalt Commissary Date: ~~1/24/17~~
Test Location: Oxidizer Outlet Source Condition: ~~Normal~~ Mid
Test Method: 4 Meter ID: CM_10 Pre-Calibration Date: 01/05/17
Meter ΔH: 1.537 Meter Y: 1.015 29.10 Test Engineer: JEA

Test (Run) No. 3 Barometric Pressure (P_{bar}) ~~29.06~~ in. Hg
Static Pressure: 7.50 Stack Temperature: 465 (From Method 2 Test Data)
Gas Sample Analysis: 0.5 %CO_2 19.5 %O_2

Clock Time 24 hour	Meter Volume (Vm) ft3 or L (Circle One)	Meter Gage Pressure (ΔH) in. H_2O	Meter Inlet Temp. (t_m) °F	Meter Outlet Temp. (t_m) °F	Impinger Outlet Temp °F	Meter Vacuum "Hg
1355	96.148	1.537	40	40		1
1400	89.920		41	40		1
1405	93.730		42	40		2
1410	97.460		42	40		2
1415	101.190		43	40		2
1420	104.960		44	40		2
1425	108.720		44	40		2
1430	112.470		44	41		2
1435	116.220		45	41		2
1440	120.031		46	41		2
Total Vol. in ft3 (Vm)=	33.883	Multiply total volume collected in Liters by 0.035315 to convert to ft^3				

Condensate: 405 / / mls (V_f) − 330 / / mls (V_i) = 75 mls gained

Silica Gel or Train: 261.2 grams (W_f) − 253.8 grams (W_i) = 7.4 grams gained

Average Meter Temperature: 41.7
(average of both inlet and outlet if applicable)

BWS=0.09

Comments:

Pre-Test Leak Check: 0 @ 5 "Hg
Post-Test Leak Check: 0 @ 7 "Hg

Test (Run) No. _____ Barometric Pressure (P_{bar}) _____ in. Hg
Static Pressure: _____ Stack Temperature: _____ (From Method _____ Test Data)
Gas Sample Analysis: _____ %CO_2 _____ %O_2

Clock Time 24 hour	Meter Volume (Vm) ft3 or L (Circle One)	Meter Gage Pressure (ΔH) in. H_2O	Meter Inlet Temp. (t_m) °F	Meter Outlet Temp. (t_m) °F	Impinger Outlet Temp °F	Meter Vacuum "Hg
Total Vol. in ft3 (Vm)=		Multiply total volume collected in Liters by 0.035315 to convert to ft^3				

Condensate: ___ / ___ / ___ mls (V_f) − ___ / ___ / ___ mls (V_i) = ___ mls gained

Silica Gel or Train: ___ grams (W_f) − ___ grams (W_i) = ___ grams gained

Average Meter Temperature: _____
(average of both inlet and outlet if applicable)

Comments:

Pre-Test Leak Check: ___ @ ___ "Hg
Post-Test Leak Check: ___ @ ___ "Hg

© Mostardi Platt

Null

Volumetric Flow Rate Determination Field Data Sheet

Project Number:	M170406	Date:	1-27-17
Client:	EastBalt Commissary, Inc	Test Number:	Pre1
Test Location:	Oxidizer Inlet	Start Time:	702
Source Condition:	~~Normal~~ ~~Mixed~~ Inlet Loading	End Time:	711
Test Engineer:	JEA Low	Test Tech:	JRK

Duct Diameter 1.83 ft
Flue Area 2.64 ft²
Port Length 2 "
P_{bar} 29.20 "Hg
Static 1.4 "H_2O
Static ____ "Hg
P_s 29.10 "Hg

CO_2 % .50
O_2 % 19.50
N_2 % 80
Meter No.CM 6

Upstream Disturbance, Diameters 73"
Downstream Disturbance, Diameters 81"
Pitot ID 080
Pitot Coefficient (C_p) 0.840
Wet Bulb Temp ____
Dry Bulb Temp ____
B_{ws} 0.142
Fluke # ____

Leak Checks Passed@
Pre 1.97 Inches H_2O
Post 1.96 Inches H_2O
Umbilical ID ____

Port-Point #	ΔP	Temp. °F	$\sqrt{\Delta P}$	Null Point Angle, Degrees	Port-Point #	ΔP	Temp. °F	$\sqrt{\Delta P}$	Null Point Angle, Degrees
1-1	.32	319		4					
2	.34	318		5					
3	.36	316		5					
4	.25	315		3					
5	.15	314		2					
6	.13	312		1					
7	.10	311		2					
8	.16	311		0					
2-1	.36	322		2					
2	.32	320		1					
3	.27	318		1					
4	.16	316		2					
5	.19	316		0					
6	.17	314		0					
7	.15	312		3					
8	.12	311		1					
				32/16					
				2.0 degrees					
Average									

44 x CO_2% + .32 x O_2% + .28 x N_2% = _____ (Md)

(_____ Md x _____ 1-Bws) + (18 x _____ Bws) = _____ (Ms)

85.49 x ____ Cp x $\sqrt{\frac{(\_\_\_\_\_)Ts\ °R}{\_\_\_Ms \times \_\_\_Ps}}$ x ____ $\sqrt{\Delta P}$ = ____ ft/sec (Vs)

_____ Vs x _____ Flue Area x 60 = _____ acfm

17.647 x _____ acfm x $\frac{Ps}{Ts\ °R}$ = _____ scfm x 60 = _____ scfh

© Mostardi Platt

Volumetric Flow Rate Determination Field Data Sheet

Project Number:	M170406	Date:	1-27-17
Client:	EastBalt Commissary, Inc	Test Number:	Post / Pre 2
Test Location:	Oxidizer Inlet	Start Time:	748
Source Condition:	~~Normal~~ ~~Max~~ Inlet Loading	End Time:	755
Test Engineer:	JEA Low	Test Tech:	JRK

Duct Diameter 1.83 ft
Flue Area 2.63 ft²
Port Length 2 "
P_{bar} 29.70 "Hg
Static 1.4 "H_2O
Static ____ "Hg
P_s 29.60 "Hg

CO_2 % .80
O_2 % 19.50
N_2 % 80
Meter No. CM 6

Upstream Disturbance, Diameters 73"
Downstream Disturbance, Diameters 81"
Pitot ID 080 Pitot Coefficient (C_p) 0.840
Wet Bulb Temp ____
Dry Bulb Temp ____
B_{ws} 0.417
Fluke # ____

Leak Checks Passed@
Pre Vac Inches H_2O
Post Vac Inches H_2O
Umbilical ID ____

Port-Point #	ΔP	Temp. °F	$\sqrt{\Delta P}$	Null Point Angle, Degrees	Port-Point #	ΔP	Temp. °F	$\sqrt{\Delta P}$	Null Point Angle, Degrees
1	.31	321			7				
2	.35	320							
3	.37	319							
4	.28	319							
5	.17	318							
6	.15	317							
7	.13	312							
8	.14	310							
1	.38	321							
2	.33	320							
3	.26	319							
4	.15	318							
5	.18	317							
6	.17	315							
7	.14	312							
8	.11	311							
Average									

$44 \times CO_2\% + .32 \times O_2\% + .28 \times N_2\% =$ _____ (Md)

(_____ Md × _____ 1-Bws) + (18 × _____ Bws) = _____ (Ms)

$85.49 \times \_\_\_ Cp \times \sqrt{\frac{(\_\_\_\_\_)Ts\ °R}{\_\_\_ Ms \times \_\_\_ Ps}} \times \_\_\_ \sqrt{\Delta P} = \_\_\_$ ft/sec (Vs)

_____ Vs × _____ Flue Area × 60 = _____ acfm

$17.647 \times \_\_\_ acfm \times \frac{Ps}{Ts\ °R} = \_\_\_ scfm \times 60 = \_\_\_ scfh$

© Mostardi Platt

Volumetric Flow Rate Determination Field Data Sheet

Project Number:	M170406	Date:	1-28-17
Client:	EastBalt Commissary, Inc	Test Number:	Post 2 Pre 3
Test Location:	Oxidizer Inlet	Start Time:	942
Source Condition:	~~Normal~~ ~~Heat~~ Inlet Loading	End Time:	948
Test Engineer:	JEA LDW	Test Tech:	JRK

Duct Diameter 1.83 ft
Flue Area 2.63 ft²
Port Length 2 "
P_{bar} 29.20 "Hg
Static -1.4 "H_2O
Static ____ "Hg
P_s 29.10 "Hg

CO_2 % .50
O_2 % 19.50
N_2 % 80
Meter No. CM 6

Upstream Disturbance, Diameters 73"
Downstream Disturbance, Diameters 81"
Pitot ID 080
Pitot Coefficient (C_p) 0.840
Wet Bulb Temp ____
Dry Bulb Temp ____
B_{ws} 0.143
Fluke # ____

Leak Checks Passed@
Pre ✓ 3 inches H_2O
Post ✓ 3 inches H_2O
Umbilical ID ____

Port-Point #	ΔP	Temp. °F	√ΔP	Null Point Angle, Degrees	Port-Point #	ΔP	Temp. °F	√ΔP	Null Point Angle, Degrees
1-1	.33	323							
2	.37	321							
3	.39	320							
4	.31	318							
5	.18	317							
6	.16	316							
7	.14	315							
8	.11	312							
2-1	.41	328							
2	.36	326							
3	.29	324							
4	.17	324							
5	.16	321							
6	.14	317							
7	.13	315							
8	.12	312							
Average									

44 x CO_2% + .32 x O_2% + .28 x N_2% = _____ (Md)

(_____ Md x _____ 1-Bws) + (18 x _____ Bws) = _____ (Ms)

$$85.49 \times \_\_\_\_ Cp \times \sqrt{\frac{(\_\_\_\_)\ Ts\ °R}{\_\_\_\_ Ms \times \_\_\_\_ Ps}} \times \_\_\_\_ \sqrt{\Delta P} = \_\_\_\_ \text{ ft/sec (Vs)}$$

_____ Vs x _____ Flue Area x 60 = _____ acfm

$$17.647 \times \_\_\_\_ acfm \times \frac{Ps}{Ts\ °R} = \_\_\_\_ scfm \times 60 = \_\_\_\_ scfh$$

© Mostardi Platt

Volumetric Flow Rate Determination Field Data Sheet

Project Number:	M170406	Date:	1-27-17
Client:	EastBalt Commissary, Inc	Test Number:	Post-3
Test Location:	Oxidizer Inlet	Start Time:	[redacted] 1136
Source Condition:	~~Normal~~ [redacted] Inlet loading	End Time:	[redacted] 1142
Test Engineer:	JEA Low	Test Tech:	JRK

Duct Diameter 1.83 ft
Flue Area 2.6[redacted] ft²
Port Length 2 "
P_{bar} 29.20 "Hg
Static -1.4 "H_2O
Static ____ "Hg
P_s 29.10 Hg

CO_2 % .50
O_2 % 19.50
N_2 % 80
Meter No. CM 6

Upstream Disturbance, Diameters 73"
Downstream Disturbance, Diameters 81"
Pitot ID 080
Pitot Coefficient (C_p) 0.840
Wet Bulb Temp ____
Dry Bulb Temp ____
B_{ws} 0.044
Fluke # ____

Leak Checks Passed@
Pre Yes Inches H_2O
Post Yes Inches H_2O
Umbilical ID ___

Port-Point #	ΔP	Temp. °F	$\sqrt{\Delta P}$	Null Point Angle, Degrees	Port-Point #	ΔP	Temp. °F	$\sqrt{\Delta P}$	Null Point Angle, Degrees
1-1	.30	325							
2	.39	321							
3	.32	320							
4	.20	319							
5	.18	315							
6	.17	314							
7	.12	312							
8	.10	311							
2-1	.44	331							
2	.35	330							
3	.29	325							
4	.18	322							
5	.15	320							
6	.13	318							
7	.11	313							
8	.10	310							
Average									

44 x CO_2% + .32 x O_2% + .28 x N_2% = _____ (Md)

(_____ Md x _____ 1-Bws) + (18 x _____ Bws) = _____ (Ms)

$$85.49 \times \_\_\_ Cp \times \sqrt{\frac{(\_\_\_\_\_)Ts\ °R}{\_\_\_ Ms \times \_\_\_ Ps}} \times \_\_\_ \sqrt{\Delta P} = \_\_\_ \text{ ft/sec (Vs)}$$

_____ Vs x _____ Flue Area x 60 = _____ acfm

$$17.647 \times \_\_\_ \text{acfm} \times \frac{Ps}{Ts\ °R} = \_\_\_ \text{ scfm x 60} = \_\_\_ \text{ scfh}$$

© Mostardi Platt

MOISTURE FIELD DATA SHEET

Project Name/Number: M170406 EasyBelt Commissary Date: 1-27-17
Test Location: Oxidizer Inlet Source Condition: ~~Mode~~ Low
Test Method: 4 Meter ID: CM6 Pre-Calibration Date: 1-13-17
Meter ΔH: 1.610 Meter Y: 0.993 Test Engineer: SEA

Test (Run) No. 1 Barometric Pressure (P_{bar}) 29.20 in. Hg
Static Pressure: -1.4 Stack Temperature: 320 (From Method 2 Test Data)

Gas Sample Analysis: 0.5 %CO_2 19.5 %O_2

Clock Time 24 hour	Meter Volume (Vm) ft3 or L (Circle One)	Meter Gage Pressure (ΔH) in. H_2O	Meter Inlet Temp. (t_m) °F	Meter Outlet Temp. (t_m) °F	Impinger Outlet Temp °F	Meter Vacuum "Hg
650	80.980	1.610	33	33		1
655	84.760		33	33		1
700	88.520		34	33		1
705	92.290		34	33		1
710	96.040		34	33		1
715	99.810		34	34		1
720	103.530		35	34		1
725	107.310		36	33		1
730	111.040		38	33		2
735	114.861		40	35		2

Full Feed

Total Vol. in ft3 (Vm)= 33.881 Multiply total volume collected in Liters by 0.035315 to convert to ft^3

Condensate: 315 / / mls (V_f) - 200 / / mls (V_i) = 115 mls gained

Silica Gel or Train: 246.9 grams (W_f) - 238.5 grams (W_i) = 8.9 grams gained

Average Meter Temperature: 34.45
(average of both inlet and outlet if applicable)

BWS = .142

Comments:

Pre-Test Leak Check: 0 @ 5 "Hg
Post-Test Leak Check: 0 @ 7 "Hg

Test (Run) No. 2 Barometric Pressure (P_{bar}) 29.20 in. Hg
Static Pressure: -1.4 Stack Temperature: 320 (From Method 2 Test Data)

Gas Sample Analysis: 0.5 %CO_2 19.5 %O_2

Clock Time 24 hour	Meter Volume (Vm) ft3 or L (Circle One)	Meter Gage Pressure (ΔH) in. H_2O	Meter Inlet Temp. (t_m) °F	Meter Outlet Temp. (t_m) °F	Impinger Outlet Temp °F	Meter Vacuum "Hg
840	115.530	1.610	33	33		1
845	119.310		33	33		2
850	123.130		34	33		2
855	126.830		34	33		2
900	130.620		35	33		2
905	134.330		36	34		2
910	138.110		36	34		2
915	141.830		38	34		2
920	145.610		39	35		2
925	149.388		40	35		2

Full Feed

Total Vol. in ft3 (Vm)= 33.858 Multiply total volume collected in Liters by 0.035315 to convert to ft^3

Condensate: 435 / / mls (V_f) - 315 / / mls (V_i) = 120 mls gained

Silica Gel or Train: 256.2 grams (W_f) - 246.9 grams (W_i) = 9.3 grams gained

Average Meter Temperature: 34.75
(average of both inlet and outlet if applicable)

BWS = .148

Comments:

Pre-Test Leak Check: 0 @ 5 "Hg
Post-Test Leak Check: 0 @ 6 "Hg

T2
115,010

© Mostardi Platt

MOISTURE FIELD DATA SHEET

Project Name/Number: M170406 EastBalt Commissary Date: ~~1/24/17~~ 1/27/17
Test Location: Oxidizer Inlet Source Condition: Normal ~~High~~ Low
Test Method: 4 Meter ID: CM_6 Pre-Calibration Date: 01/13/17
Meter ΔH: 1.610 Meter Y: 0.993 Test Engineer: JEA

Test (Run) No. 9 Barometric Pressure (P_{bar}) 29.20 in. Hg
Static Pressure: -1.40 Stack Temperature: 320 (From Method 2 Test Data)
Gas Sample Analysis: 0.5 %CO_2 19.5 %O_2

Clock Time 24 hour	Meter Volume (Vm) ft3 or L (Circle One)	Meter Gage Pressure (ΔH) in. H_2O	Meter Inlet Temp. (t_m) °F	Meter Outlet Temp. (t_m) °F	Impinger Outlet Temp °F	Meter Vacuum "Hg
1035	149.840	1.610	32	32	1	1
1040	153.630		33	32		1
1045	157.390		33	32		1
1050	161.120		34	32		1
1055	164.930		34	32		2
1100	168.640		35	33		2
1105	172.420		36	33		2
1110	176.180		36	33		2
1115	179.940		37	34		2
1120	183.677		39	34		2
Total Vol. in ft3 (Vm)=	33.837	Multiply total volume collected in Liters by 0.035315 to convert to ft^3				

Condensate: 592 / / mls (V_f); 435 / / mls (V_i); = 117 mls gained
Silica Gel or Train: 265.5 grams (W_f); 256.2 grams (W_i); = 9.3 grams gained

Average Meter Temperature: 33.8
(average of both inlet and outlet if applicable)

BWS = .144

Comments:
Pre-Test Leak Check: 0 @ 5 "Hg
Post-Test Leak Check: 0 @ 6 "Hg

Test (Run) No. Barometric Pressure (P_{bar}) in. Hg
Static Pressure: Stack Temperature: (From Method Test Data)
Gas Sample Analysis: %CO_2 %O_2

Clock Time 24 hour	Meter Volume (Vm) ft3 or L (Circle One)	Meter Gage Pressure (ΔH) in. H_2O	Meter Inlet Temp. (t_m) °F	Meter Outlet Temp. (t_m) °F	Impinger Outlet Temp °F	Meter Vacuum "Hg
		1.610				
Total Vol. in ft3 (Vm)=		Multiply total volume collected in Liters by 0.035315 to convert to ft^3				

Condensate: / / mls (V_f); / / mls (V_i); = mls gained
Silica Gel or Train: grams (W_f); grams (W_i); = grams gained

Average Meter Temperature:
(average of both inlet and outlet if applicable)

Comments:
Pre-Test Leak Check: @ "Hg
Post-Test Leak Check: @ "Hg

© Mostardi Platt

[redacted]

Nol)

Volumetric Flow Rate Determination Field Data Sheet

Project Number:	M170406	Date:	1-20-17
Client:	EastBalt Commissary Inc	Test Number:	Pre1
Test Location:	Oxidizer Outlet	Start Time:	650
Source Condition:	~~Normal~~ ~~[illegible]~~ Inlet Loading	End Time:	700
Test Engineer:	JEA LOW	Test Tech:	~~[illegible]~~ JRK

Duct Diameter 1.87 ft
Flue Area 2.75 ft²
Port Length 5 "
P_{bar} 29.20 "Hg
Static -.40 "H_2O
Static ____ "Hg
P_s 29.17 "Hg

CO_2 % .50
O_2 % 19.50
N_2 % 80
Meter No. CM10

Upstream Disturbance, Diameters > 2
Downstream Disturbance, Diameters 107"
Pitot ID 080
Pitot Coefficient (C_p) 0.840

Wet Bulb Temp ____
Dry Bulb Temp ____
B_{ws} 0.073
Fluke # ____

Leak Checks Passed@
Pre .09 Inches H_2O
Post .05 Inches H_2O
Umbilical ID ____

Port-Point #	ΔP	Temp. °F	√ΔP	Null Point Angle, Degrees	Port-Point #	ΔP	Temp. °F	√ΔP	Null Point Angle, Degrees
1-1	.38	453		2					
2	.46	455		3					
3	.44	457		2					
4	.41	459		1					
5	.39	460		0					
6	.44	462		0					
7	.47	460		4					
8	.60	453		0					
2-1	.43	454		2					
2	.46	456		3					
3	.41	460		2					
4	.40	461		2					
5	.37	460		1					
6	.42	458		1					
7	.57	452		0					
8	.64	450		2					
				25/16					
Average				1.56 degrees					

44 x CO_2% + .32 x O_2% + .28 x N_2% = _____ (Md)

(_____ Md x _____ 1-Bws) + (18 x _____ Bws) = _____ (Ms)

$$85.49 \times \_\_\_ Cp \times \sqrt{\frac{(\_\_\_\_\_)Ts\ °R}{\_\_\_ Ms \times \_\_\_ Ps}} \times \_\_\_ \sqrt{\Delta P} = \_\_\_ \text{ ft/sec (Vs)}$$

_____ Vs x _____ Flue Area x 60 = _____ acfm

$$17.647 \times \_\_\_ \text{acfm} \times \frac{Ps}{Ts\ °R} = \_\_\_ \text{ scfm x 60} = \_\_\_ \text{ scfh}$$

© Mostardi Platt

Volumetric Flow Rate Determination Field Data Sheet

1-27-17

Project Number:	M170406	Date:	~~1-26-17~~
Client:	EastBalt Commissary, Inc	Test Number:	Post 1/Piez
Test Location:	Oxidizer Outlet	Start Time:	740 ~~746~~
Source Condition:	~~Normal~~ ~~Max~~ Toilet Loading	End Time:	746
Test Engineer:	JEA LDW	Test Tech:	JRK

Duct Diameter 1.87 ft
Flue Area 2.75 ft²
Port Length 5 "
P_{bar} 29.70 Hg
Static -.40 "H_2O
Static _____ "Hg
P_s 29.57 "Hg

CO_2 % .50
O_2 % 19.50
N_2 % 80
Meter No. CM10

Upstream Disturbance, Diameters > 2
Downstream Disturbance, Diameters 107"
Pitot ID 080
Pitot Coefficient (C_p) 0.840
Wet Bulb Temp _____
Dry Bulb Temp _____
B_{ws} 0.073
Fluke # _____

Leak Checks Passed@
Pre .02 Inches H_2O
Post .06 Inches H_2O
Umbilical ID ___

Port-Point #	ΔP	Temp. °F	$\sqrt{\Delta P}$	Null Point Angle, Degrees	Port-Point #	ΔP	Temp. °F	$\sqrt{\Delta P}$	Null Point Angle, Degrees
1-1	.39	450							
2	.44	451							
3	.42	454							
4	.40	456							
5	.38	457							
6	.46	459							
7	.48	463							
8	.62	452							
2-1	.42	452							
2	.46	456							
3	.40	461							
4	.37	460							
5	.43	454							
6	.34	450							
7	.61	446							
8	.65	442							
Average									

44 x CO_2% + .32 x O_2% + .28 x N_2% = _____ (Md)

(_____ Md x _____ 1-Bws) + (18 x _____ Bws) = _____ (Ms)

$$85.49 \times \_\_\_ Cp \times \sqrt{\frac{(\_\_\_\_\_)Ts\ °R}{\_\_\_ Ms \times \_\_\_ Ps}} \times \_\_\_ \sqrt{\Delta P} = \_\_\_ \text{ ft/sec } (Vs)$$

_____ Vs x _____ Flue Area x 60 = _____ acfm

$$17.647 \times \_\_\_ \text{acfm} \times \frac{Ps}{Ts\ °R} = \_\_\_ \text{scfm} \times 60 = \_\_\_ \text{scfh}$$

© Mostardi Platt

Volumetric Flow Rate Determination Field Data Sheet

Project Number:	M170406	Date:	~~1-26-17~~ 1-27-17
Client:	EastBalt Commissary, Inc	Test Number:	Post 2 / Pre 3
Test Location:	Oxidizer Outlet	Start Time:	9:33
Source Condition:	~~Normal~~ ~~Mid~~ Inlet Loading	End Time:	939
Test Engineer:	JEA Low	Test Tech:	~~JEA~~ JRK

Duct Diameter 1.87 ft
Flue Area 2.75 ft²
Port Length 5 "
P_{bar} 29.20 "Hg
Static -.40 "H_2O
Static ____ "Hg
P_s 29.17 "Hg

CO_2 % .50
O_2 % 19.50
N_2 % 80
Meter No. CM10

Upstream Disturbance, Diameters > 2
Downstream Disturbance, Diameters 107"
Pitot ID .080 Pitot Coefficient (C_p) 0.840
Wet Bulb Temp ____
Dry Bulb Temp ____
B_{ws} 0.07
Fluke # ____

Leak Checks Passed@
Pre .65 Inches H_2O
Post .67 Inches H_2O
Umbilical ID ____

Port-Point #	ΔP	Temp. °F	$\sqrt{\Delta P}$	Null Point Angle, Degrees	Port-Point #	ΔP	Temp. °F	$\sqrt{\Delta P}$	Null Point Angle, Degrees
1-1	.36	455							
2	.42	453							
3	.41	458							
4	.39	460							
5	.46	449							
6	.45	447							
7	.60	441							
8	.62	439							
2-1	.40	456							
2	.47	460							
3	.43	462							
4	.38	460							
5	.41	452							
6	.56	449							
7	.62	447							
8	.67	441							
Average									

44 x CO_2% + .32 x O_2% + .28 x N_2% = _____ (Md)

(_____ Md x _____1-Bws) + (18 x_____Bws) = _____ (Ms)

$$85.49 \times \_\_\_\_ Cp \times \sqrt{\frac{(\_\_\_\_\_)Ts\ °R}{\_\_\_\_ Ms \times \_\_\_\_ Ps}} \times \_\_\_\_ \sqrt{\Delta P} = \_\_\_\_ \text{ ft/sec (Vs)}$$

_____ Vs x _____ Flue Area x 60 = _____acfm

$$17.647 \times \_\_\_\_ acfm \times \frac{Ps}{Ts\ °R} = \_\_\_\_\_ scfm \times 60 = \_\_\_\_\_ scfh$$

© Mostardi Platt

Volumetric Flow Rate Determination Field Data Sheet

Project Number:	M170406	Date:	~~1-26-17~~ 1-27-17
Client:	EastBalt Commissary, Inc	Test Number:	Post3
Test Location:	Oxidizer Outlet	Start Time:	1128
Source Condition:	~~Normal~~ Inlet Loading	End Time:	1134
Test Engineer:	JEA Low	Test Tech:	~~[illegible]~~ JRK

Duct Diameter __1.87__ ft
Flue Area __2.75____ ft²
Port Length __5____"
P_{bar} 29.20 "Hg
Static -.40 "H_2O
Static _____ "Hg
P_s 29.17 "Hg

CO_2 % .50
O_2 % 19.50
N_2 % 80
Meter No.CM10

Upstream Disturbance, Diameters > 2_____
Downstream Disturbance, Diameters 107"_____
Pitot ID_080___ Pitot Coefficient (C_p) _0.840___
Wet Bulb Temp _____
Dry Bulb Temp _____
B_{ws} 0.082
Fluke # _____

Leak Checks Passed@
Pre ✓ 25 Inches H_2O
Post ✓ 25 Inches H_2O
Umbilical ID ___

Port-Point #	ΔP	Temp. °F	$\sqrt{\Delta P}$	Null Point Angle, Degrees	Port-Point #	ΔP	Temp. °F	$\sqrt{\Delta P}$	Null Point Angle, Degrees
1-1	.38	461							
2	.44	464							
3	.40	458							
4	.37	456							
5	.44	453							
6	.41	446							
7	.58	441							
8	.60	439							
2-1	.43	460							
2	.46	464							
3	.44	460							
4	.37	454							
5	.39	451							
6	.38	448							
7	.54	443							
8	.63	441							
Average									

44 x CO_2% + .32 x O_2% + .28 x N_2% = _____ (Md)

(_____ Md x _____ 1-Bws) + (18 x _____ Bws) = _____ (Ms)

85.49 x ____Cp x $\sqrt{\frac{(\_\_\_\_\_)Ts\ °R}{\_\_\_Ms \times \_\_\_Ps}}$ x ____ $\sqrt{\Delta P}$ = ____ ft/sec (Vs)

_____ Vs x _____ Flue Area x 60 = _____ acfm

17.647 x _____ acfm x $\frac{Ps}{Ts\ °R}$ = _____ scfm x 60 = _____ scfh

© Mostardi Platt

1/27/17

MOISTURE FIELD DATA SHEET

Project Name/Number: M170406 EastBalt Commissary Date: ~~1/24/17~~
Test Location: Oxidizer Outlet Source Condition: ~~Normal~~ LOW
Test Method: 4 Meter ID: CM_10 Pre-Calibration Date: 01/05/17
Meter ΔH: 1.537 Meter Y: 1.015 Test Engineer: JEA

Test (Run) No. 1 Barometric Pressure (P_{bar}) 29.20 in. Hg
Static Pressure: -.40 Stack Temperature: 450 (From Method 2 Test Data)

Gas Sample Analysis: 0.5 %CO_2 19.5 %O_2

Clock Time 24 hour	Meter Volume (Vm) ft3 or L (Circle One)	Meter Gage Pressure (ΔH) in. H_2O	Meter Inlet Temp. (t_m) °F	Meter Outlet Temp. (t_m) °F	Impinger Outlet Temp °F	Meter Vacuum "Hg
650	20.930	1.537	33	33	Fully Iced	1
655	24.720		34	33		1
700	28.460		34	33		1
705	32.210		34	33		2
710	35.960		34	33		2
715	39.730		35	34		2
720	43.510		37	34		2
725	47.220		38	35		2
730	51.040		39	35		2
735	54.722		39	35		2
Total Vol. in ft3 (Vm)=	33.792	Multiply total volume collected in Liters by 0.035315 to convert to ft³				

Condensate: 255 / / mls (V_f) - 200 / / mls (V_i) = 55 mls gained

Silica Gel or Train: 252.9 grams (W_f) - 248.1 grams (W_i) = 48 grams gained

Average Meter Temperature: 34.75
(average of both inlet and outlet if applicable)

BWS=.073

Comments:

Pre-Test Leak Check: 0 @ 4 "Hg
Post-Test Leak Check: 0 @ 6 "Hg

Test (Run) No. 2 Barometric Pressure (P_{bar}) 29.20 in. Hg
Static Pressure: -.40 Stack Temperature: 450 (From Method 2 Test Data)

Gas Sample Analysis: 0.5 %CO_2 19.5 %O_2

Clock Time 24 hour	Meter Volume (Vm) ft3 or L (Circle One)	Meter Gage Pressure (ΔH) in. H_2O	Meter Inlet Temp. (t_m) °F	Meter Outlet Temp. (t_m) °F	Impinger Outlet Temp °F	Meter Vacuum "Hg
840	55.246	1.537	33	33	Fully Iced	1
845	59.030		33	33		1
850	62.840		34	33		1
855	66.570		34	33		1
900	70.320		35	34		1
905	74.040		35	34		2
910	77.820		36	35		2
915	81.580		38	35		2
920	85.390		39	35		2
925	89.061		41	35		2
Total Vol. in ft3 (Vm)=	33.815	Multiply total volume collected in Liters by 0.035315 to convert to ft³				

Condensate: 315 / mls (V_f) - 255 / mls (V_i) = 60 mls gained

Silica Gel or Train: 258.0 grams (W_f) - 252.9 grams (W_i) = 5.1 grams gained

Average Meter Temperature: 34.9
(average of both inlet and outlet if applicable)

BWS=.079

Comments:

Pre-Test Leak Check: 0 @ 5 "Hg
Post-Test Leak Check: 0 @ 7 "Hg

© Mostardi Platt

MOISTURE FIELD DATA SHEET

Project Name/Number: M170406 EastBalt Commissary Date: ~~1/24/17~~ 1-27-17
Test Location: Oxidizer Outlet Source Condition: Normal ~~M-12~~ Low
Test Method: 4 Meter ID: CM_10 Pre-Calibration Date: 01/05/17
Meter ΔH: 1.537 Meter Y: 1.015 Test Engineer: JEA

Test (Run) No. 3 Barometric Pressure (P_{bar}) 29.20 in. Hg
Static Pressure: -.40 Stack Temperature: 450 (From Method 2 Test Data)

Gas Sample Analysis: 0.5 %CO_2 19.5 %O_2

Clock Time 24 hour	Meter Volume (Vm) ft3 or L (Circle One)	Meter Gage Pressure (ΔH) in. H_2O	Meter Inlet Temp. (t_m) °F	Meter Outlet Temp. (t_m) °F	Impinger Outlet Temp °F	Meter Vacuum "Hg
1035	89.730	1.537	33	33	Fully Iced	1
1040	93.520		34	33		1
1045	97.280		34	33		1
1050	101.040		35	33		2
1055	104.820		35	33		2
1100	108.530		36	34		2
1105	112.280		36	34		2
1110	116.040		38	34		2
1115	119.820		39	35		2
1120	123.571		40	35		2
Total Vol. in ft3 (Vm)=	33.841	Multiply total volume collected in Liters by 0.035315 to convert to ft³				

Condensate

[illegible] mls (V_f)
- [illegible] mls (V_i)
= [illegible] mls gained
63

Silica Gel or Train

263.4 grams (W_f)
- 258.0 grams (W_i)
= 5.4 grams gained

Average Meter Temperature: 34.85
(average of both inlet and outlet if applicable)

BWS=.082

Comments:

Pre-Test Leak Check: 0 @ 4 "Hg
Post-Test Leak Check: 0 @ 5 "Hg

Test (Run) No. Barometric Pressure (P_{bar}) in. Hg
Static Pressure: Stack Temperature: (From Method Test Data)

Gas Sample Analysis: %CO_2 %O_2

Clock Time 24 hour	Meter Volume (Vm) ft3 or L (Circle One)	Meter Gage Pressure (ΔH) in. H_2O	Meter Inlet Temp. (t_m) °F	Meter Outlet Temp. (t_m) °F	Impinger Outlet Temp °F	Meter Vacuum "Hg
Total Vol. in ft3 (Vm)=		Multiply total volume collected in Liters by 0.035315 to convert to ft³				

Condensate

___/___/___ mls (V_f)
- ___/___/___ mls (V_i)
= ___ mls gained

Silica Gel or Train

___ grams (W_f)
- ___ grams (W_i)
= ___ grams gained

Average Meter Temperature: ___
(average of both inlet and outlet if applicable)

Comments:

Pre-Test Leak Check: ___ @ ___ "Hg
Post-Test Leak Check: ___ @ ___ "Hg

© Mostardi Platt

Volumetric Flow Rate Determination Field Data Sheet

Project Number:	M170406	Date:	2/16/17
Client:	Eastfield Commissary	Test Number:	1
Test Location:	Oxidizer ~~Eastfield Commissary~~ Inlet Duct	Start Time:	~~10:35~~ 9:35
Source Condition:	High	End Time:	~~10:46~~ 9:46
Test Engineer:	DJM	Test Tech:	EMC

Duct Diameter 1.43 ft
Flue Area 2.63 ft²
Port Length 2 "
P_{bar} 29.23 "Hg
Static ____ "H_2O
Static 1.6 "Hg
P_s ____ "Hg

CO_2 % 0.50
O_2 % 19.50
N_2 % 80.00
Meter No. CM23

Upstream Disturbance, Diameters 73"
Downstream Disturbance, Diameters 51"
Pitot ID 17 Pitot Coefficient (C_p) .84
Wet Bulb Temp N/A
Dry Bulb Temp N/A
B_{ws} 0.143
Fluke # N/A

Leak Checks Passed@
Pre 3.0 Inches H_2O
Post 3.2 Inches H_2O
Umbilical ID ___

Port-Point #	ΔP	Temp. °F	$\sqrt{\Delta P}$	Null Point Angle, Degrees	Port-Point #	ΔP	Temp. °F	$\sqrt{\Delta P}$	Null Point Angle, Degrees
1-1	.28	332							
-2	.27	335							
-3	.23	335							
-4	.2	339							
-5	.16	336							
-6	.16	336							
-7	.14	280							
-8	.14	295							
2-1	.14	330							
-2	.14	330							
-3	.17	329							
-4	.16	312							
-5	.20	315							
-6	.21	314							
-7	.33	311							
-8	.37	310							
Average									

44 x CO_2% + .32 x O_2% + .28 x N_2% = _____ (Md)

(_____ Md x _____ 1-Bws) + (18 x _____ Bws) = _____ (Ms)

$$85.49 \times \_\_\_\_ Cp \times \sqrt{\frac{(\_\_\_\_\_)Ts\ °R}{\_\_\_\_ Ms \times \_\_\_\_ Ps}} \times \_\_\_\_ \sqrt{\Delta P} = \_\_\_\_ \text{ ft/sec (Vs)}$$

_____ Vs x _____ Flue Area x 60 = _____ acfm

$$17.647 \times \_\_\_\_ acfm \times \frac{Ps}{Ts\ °R} = \_\_\_\_\_ scfm \times 60 = \_\_\_\_\_ scfh$$

© Mostardi Platt

Volumetric Flow Rate Determination Field Data Sheet

Project Number:	M170406	Date:	2/16/17
Client:	Eastbalt Cammby	Test Number:	2
Test Location:	Outdoor Stack Inlet Duct	Start Time:	10:47
Source Condition:	High	End Time:	10:58
Test Engineer:	DJH	Test Tech:	EMC

Duct Diameter 1.83 ft
Flue Area 2.63 ft²
Port Length 2 "
P_{bar} 29.23 "Hg
Static 8.16 "H_2O
Static ____ "Hg
P_s ____ "Hg

CO_2 % 0.50
O_2 % 19.50
N_2 % 80.00
Meter No. CM13

Upstream Disturbance, Diameters 73"
Downstream Disturbance, Diameters 81"
Pitot ID 14 Pitot Coefficient (C_p) .84
Wet Bulb Temp NA
Dry Bulb Temp NA
B_{ws} 0.143
Fluke # NA

Leak Checks Passed@
Pre 3.5 Inches H_2O
Post 3.6 Inches H_2O
Umbilical ID ___

Port-Point #	ΔP	Temp. °F	$\sqrt{\Delta P}$	Null Point Angle, Degrees	Port-Point #	ΔP	Temp. °F	$\sqrt{\Delta P}$	Null Point Angle, Degrees
1-1	.28	328							
-2	.24	328							
-3	.15	328							
-4	.14	330							
-5	.16	330							
-6	.17	330							
-7	.17	312							
-8	.18	280							
2-1	.16	315							
-2	.16	317							
-3	.16	320							
-4	.15	310							
-5	.21	323							
-6	.21	315							
-7	.24	310							
-8	.32	315							
Average									

44 x CO_2% + .32 x O_2% + .28 x N_2% = _____ (Md)

(_____ Md x _____ 1-Bws) + (18 x _____ Bws) = _____ (Ms)

85.49 x ____ Cp x $\sqrt{\frac{(\_\_\_\_\_)\ Ts\ °R}{\_\_\_\ Ms \times \_\_\_\ Ps}}$ x ____ $\sqrt{\Delta P}$ = ____ ft/sec (Vs)

_____ Vs x _____ Flue Area x 60 = _____ acfm

17.647 x _____ acfm x $\frac{Ps}{Ts\ °R}$ = _____ scfm x 60 = _____ scfh

Volumetric Flow Rate Determination Field Data Sheet

Project Number:	M170406	Date:	2/16/17
Client:	Westbrook Comm	Test Number:	3
Test Location:	Oxidizer Inlet Duct	Start Time:	12:35
Source Condition:	High	End Time:	13:04
Test Engineer:	DJM	Test Tech:	EMC

Duct Diameter 1.43 ft
Flue Area 2.63 ft²
Port Length 2 "
P_{bar} 29.23 "Hg
Static 0.6 "H_2O
Static ____ "Hg
P_s ____ "Hg

CO_2 % 0.50
O_2 % 19.50
N_2 % 80.00
Meter No. CM13

Upstream Disturbance, Diameters 7.1
Downstream Disturbance, Diameters 8.1
Pitot ID 14 Pitot Coefficient (C_p) .84
Wet Bulb Temp NA
Dry Bulb Temp NA
B_{ws} 0.137
Fluke # N/A

Leak Checks Passed@
Pre 2.2 Inches H_2O
Post 3.4 Inches H_2O
Umbilical ID ___

Port-Point #	ΔP	Temp. °F	$\sqrt{\Delta P}$	Null Point Angle, Degrees	Port-Point #	ΔP	Temp. °F	$\sqrt{\Delta P}$	Null Point Angle, Degrees
1-1	.25	315							
-2	.22	320							
-3	.18	323							
-4	.17	325							
-5	.15	326							
-6	.17	325							
-7	.15	315							
-8	.16	303							
2-1	.14	312							
-2	.14	326							
-3	.13	328							
-4	.13	329							
-5	.10	329							
-6	.22	320							
-7	.19	329							
-8	.20	329							
Average									

44 x CO_2% + .32 x O_2% + .28 x N_2% = _____ (Md)

(_____ Md x _____1-Bws) + (18 x_____Bws) = _____ (Ms)

$$85.49 \times \_\_\_\_ Cp \times \sqrt{\frac{(\_\_\_\_\_)Ts\ °R}{\_\_\_\_ Ms \times \_\_\_\_ Ps}} \times \_\_\_\_ \sqrt{\Delta P} = \_\_\_\_ \text{ ft/sec (Vs)}$$

_____ Vs x _____ Flue Area x 60 = _____acfm

$$17.647 \times \_\_\_\_ acfm \times \frac{Ps}{Ts\ °R} = \_\_\_\_\_ scfm \times 60 = \_\_\_\_\_ scfh$$

© Mostardi Platt

Volumetric Flow Rate Determination Field Data Sheet

Project Number:	M170406	Date:	7/16/17
Client:	Eastbalt Company	Test Number:	4
Test Location:	Oxidizer Stack Inlet Duct	Start Time:	13:55
Source Condition:	High	End Time:	14:03
Test Engineer:	DJH	Test Tech:	EMC

Duct Diameter 1.83 ft
Flue Area 2.63 ft²
Port Length 2 "
P_{bar} 29.29 "Hg
Static 1.6 "H_2O
Static _____ "Hg
P_s _____ "Hg

CO_2 % 0.50
O_2 % 19.50
N_2 % 80.00
Meter No. CM23

Upstream Disturbance, Diameters 73"
Downstream Disturbance, Diameters 61"
Pitot ID 14 Pitot Coefficient (C_p) .84
Wet Bulb Temp N/A
Dry Bulb Temp N/A
B_{ws} 0.137
Fluke # N/A

Leak Checks Passed@
Pre 3.2 Inches H_2O
Post 3.5 Inches H_2O
Umbilical ID ___

Port-Point #	ΔP	Temp. °F	$\sqrt{\Delta P}$	Null Point Angle, Degrees	Port-Point #	ΔP	Temp. °F	$\sqrt{\Delta P}$	Null Point Angle, Degrees
1-1	.25	325							
-2	.23	323							
-3	.18	321							
-4	.15	322							
-5	.15	327							
-6	.12	328							
-7	.16	320							
-8	.16	321							
2-1	.18	320							
-2	.17	317							
-3	.15	323							
-4	.15	323							
-5	.18	319							
-6	.23	325							
-7	.23	315							
-8	.28	285							
Average									

44 x CO_2% + .32 x O_2% + .28 x N_2% = _____ (Md)

(_____ Md x _____ 1-Bws) + (18 x _____ Bws) = _____ (Ms)

85.49 × ____ Cp × $\sqrt{\frac{(\_\_\_\_\_)\text{Ts °R}}{\_\_\_\_\text{Ms} \times \_\_\_\_\text{Ps}}}$ × ____ $\sqrt{\Delta P}$ = ____ ft/sec (Vs)

_____ Vs × _____ Flue Area × 60 = _____ acfm

17.647 × _____ acfm × $\frac{Ps}{Ts\ °R}$ = _____ scfm x 60 = _____ scfh

© Mostardi Platt

Volumetric Flow Rate Determination Field Data Sheet

Project Number:	M170406	Date:	2/16/17
Client:	East Bostn Company	Test Number:	5
Test Location:	Outlet ~~East Bostn Company~~ Inlet Duct	Start Time:	15:04
Source Condition:	High	End Time:	15:10
Test Engineer:	DM	Test Tech:	EMC

Duct Diameter 1.83 ft
Flue Area 2.63 ft²
Port Length 2 "
P_{bar} 29.22 "Hg
Static 1.6 "H_2O
Static _____ "Hg
P_s _____ "Hg

CO_2 % 0.5
O_2 % 19.50
N_2 % 80.00
Meter No. CM23

Upstream Disturbance, Diameters 73"
Downstream Disturbance, Diameters 81"
Pitot ID 14 Pitot Coefficient (C_p) .84
Wet Bulb Temp N/A
Dry Bulb Temp N/A
B_{ws} 0.130
Fluke # N/A

Leak Checks Passed@
Pre 3.0 Inches H_2O
Post 3.2 Inches H_2O
Umbilical ID ___

Port-Point #	ΔP	Temp. °F	$\sqrt{\Delta P}$	Null Point Angle, Degrees	Port-Point #	ΔP	Temp. °F	$\sqrt{\Delta P}$	Null Point Angle, Degrees
1-1	.26	315							
-2	.24	318							
-3	.21	313							
-4	.18	320							
-5	.16	322							
-6	.17	324							
-7	.15	322							
-8	.13	300							
2-1	.18	310							
-2	.17	315							
-3	.15	329							
-4	.16	318							
-5	.14	314							
-6	.19	323							
-7	.20	318							
-8	.24	300							
Average									

44 x CO_2% + .32 x O_2% + .28 x N_2% = _____ (Md)

(_____ Md × _____1-Bws) + (18 × _____Bws) = _____ (Ms)

85.49 × ____Cp × $\sqrt{\frac{(\_\_\_\_\_)Ts\ °R}{\_\_\_\_Ms \times \_\_\_\_Ps}}$ × ____ $\sqrt{\Delta P}$ = ____ ft/sec (Vs)

_____ Vs × _____ Flue Area × 60 = _____ acfm

17.647 × _____acfm × $\frac{Ps}{Ts\ °R}$ = _____ scfm x 60 = _____ scfh

© Mostardi Platt

MOISTURE FIELD DATA SHEET

Project Name/Number: East Ball Commissary Inc, Chicago, IL M170406 Date: 2/16/17
Test Location: Oxidizer Stack Inlet Duct Source Condition: High
Test Method: Method 4 Meter ID: CM23 Pre-Calibration Date: 2/13/17
Meter ΔH: 1.747 Meter Y: 1.007 Test Engineer: DJK

Test (Run) No. 1 Barometric Pressure (P_{bar}) 29.23 in. Hg
Static Pressure: 1.6 Stack Temperature: 320 (From Method 2 Test Data)

Gas Sample Analysis: 0.50 %CO_2 19.50 %O_2

Clock Time 24 hour	Meter Volume (Vm) ft3 or L (Circle One)	Meter Gage Pressure (ΔH) in. H_2O	Meter Inlet Temp. (t_m) °F	Meter Outlet Temp. (t_m) °F	Impinger Outlet Temp °F	Meter Vacuum "Hg
945	67.597	1.75	49	49	47	3
950	70.04		49	49	47	3
955	72.32		50	50	48	3
1000	74.63		51	51	49	3
1005	77.12		51	51	49	3
1010	79.32		52	51	50	3
1015	81.67		53	51	50	3
1020	84.03		53	51	51	3
1025	86.34		53	52	51	3
1030	88.721		53	52	51	3
Total Vol. in ft3 (Vm)=		Multiply total volume collected in Liters by 0.035315 to convert to ft^3				

Condensate: / / 235 mls (V_f) - / / 200 mls (V_i) = 35 mls gained

Silica Gel or Train: 239.2 grams (W_f) - 237.8 grams (W_i) = 1.4 grams gained

Average Meter Temperature: 51.000
(average of both inlet and outlet if applicable)

Comments:

Pre-Test Leak Check: 0.000 @ 10 "Hg

Post-Test Leak Check: 0.000 @ 10 "Hg

Test (Run) No. 2 Barometric Pressure (P_{bar}) 29.23 in. Hg
Static Pressure: 1.6 Stack Temperature: 320 (From Method 2 Test Data)

Gas Sample Analysis: 0.50 %CO_2 19.50 %O_2

Clock Time 24 hour	Meter Volume (Vm) ft3 or L (Circle One)	Meter Gage Pressure (ΔH) in. H_2O	Meter Inlet Temp. (t_m) °F	Meter Outlet Temp. (t_m) °F	Impinger Outlet Temp °F	Meter Vacuum "Hg
1220	89.041	1.75	47	47	45	3
1225	91.42		47	47	46	3
1230	93.78		49	48	46	3
1235	96.17		48	49	46	3
1240	98.43		48	49	46	3
1245	100.75		50	49	47	3
1250	103.11		50	49	47	3
1255	105.48		50	49	47	3
1300	107.83		52	50	48	3
1305	110.125		52	50	48	3
Total Vol. in ft3 (Vm)=		Multiply total volume collected in Liters by 0.035315 to convert to ft^3				

Condensate: / / 279 mls (V_f) - / / 235 mls (V_i) = 44 mls gained

Silica Gel or Train: 245.3 grams (W_f) - 236.2 grams (W_i) = 9.1 grams gained

Average Meter Temperature: 49.00
(average of both inlet and outlet if applicable)

Comments:

Pre-Test Leak Check: 0.000 @ 10 "Hg

Post-Test Leak Check: 0.000 @ 10 "Hg

MOISTURE FIELD DATA SHEET

Project Name/Number: East Bell Commissary Inc., Chicago, IL M170406 Date: 2/16/17
Test Location: Oxidizer Stack Inlet Duct Source Condition: High
Test Method: Method 4 Meter ID: CM23 Pre-Calibration Date: 2/13/17
Meter ΔH: 1.747 Meter Y: 1.007 Test Engineer: DSK

Test (Run) No. 3 Barometric Pressure (P_{bar}) 29.22 in. Hg
Static Pressure: 1.6 Stack Temperature: 328 (From Method 2 Test Data)
Gas Sample Analysis: 6.50 %CO_2 19.50 %O_2

Clock Time 24 hour	Meter Volume (Vm) ft3 or L (Circle One)	Meter Gage Pressure (ΔH) in. H_2O	Meter Inlet Temp. (t_m) °F	Meter Outlet Temp. (t_m) °F	Impinger Outlet Temp °F	Meter Vacuum "Hg
1355	10.555	1.75	49	49	45	3
1400	12.76		49	49	45	3
1405	15.12		50	49	45	3
1410	17.43		50	49	45	3
1415	19.75		51	49	46	3
1420	22.12		51	51	46	3
1425	24.46		52	51	46	3
1430	26.75		53	51	47	3
1435	29.12		53	51	47	3
1440	31.521		54	51	47	3
Total Vol. in ft3 (Vm)=		Multiply total volume collected in Liters by 0.035315 to convert to ft^3				

Condensate: ___/___/964 mls (V_f) - ___/___/200 mls (V_i) = 64 mls gained

Silica Gel or Train: 247.7 grams (W_f) - 243.2 grams (W_i) = 4.5 grams gained

Average Meter Temperature: 51.00
(average of both inlet and outlet if applicable)

Comments:

Pre-Test Leak Check: 0.000 @ 10 "Hg
Post-Test Leak Check: 0.000 @ 10 "Hg

Test (Run) No. ___ Barometric Pressure (P_{bar}) ___ in. Hg
Static Pressure: ___ Stack Temperature: ___ (From Method ___ Test Data)
Gas Sample Analysis: ___ %CO_2 ___ %O_2

Clock Time 24 hour	Meter Volume (Vm) ft3 or L (Circle One)	Meter Gage Pressure (ΔH) in. H_2O	Meter Inlet Temp. (t_m) °F	Meter Outlet Temp. (t_m) °F	Impinger Outlet Temp °F	Meter Vacuum "Hg
Total Vol. in ft3 (Vm)=		Multiply total volume collected in Liters by 0.035315 to convert to ft^3				

Condensate: ___/___/___mls (V_f) - ___/___/___mls (V_i) = ___mls gained

Silica Gel or Train: ___grams (W_f) - ___grams (W_i) = ___grams gained

Average Meter Temperature: ___
(average of both inlet and outlet if applicable)

Comments:

Pre-Test Leak Check: ___@___"Hg
Post-Test Leak Check: ___@___"Hg

© Mostardi Platt

Volumetric Flow Rate Determination Field Data Sheet

Project Number:	M170406	Date:	2/16/17
Client:	Lightburn Company	Test Number:	1
Test Location:	Outlet Oxidizer Stack	Start Time:	9:17
Source Condition:	High	End Time:	9:58
Test Engineer:	DJM	Test Tech:	EMC

Duct Diameter 1.425 ft
Flue Area 2.76 ft²
Port Length 5 "
P_{bar} 29.20 "Hg
Static 0.5 "H_2O
Static ____ "Hg
P_s ____ "Hg

CO_2 % 0.5
O_2 % 19.5
N_2 % 80.0
Meter No. CM19

Upstream Disturbance, Diameters >2
Downstream Disturbance, Diameters 10.7
Pitot ID New Pitot Coefficient (C_p) .84
Wet Bulb Temp N/A
Dry Bulb Temp N/A
B_{ws} 0.070
Fluke # N/A

Leak Checks Passed@
Pre 1.0 Inches H_2O
Post 3.5 Inches H_2O
Umbilical ID ___

Port-Point #	ΔP	Temp. °F	$\sqrt{\Delta P}$	Null Point Angle, Degrees	Port-Point #	ΔP	Temp. °F	$\sqrt{\Delta P}$	Null Point Angle, Degrees
1-1	.44	513							
-2	.49	514							
-3	.51	515							
-4	.43	516							
-5	.47	524							
-6	.56	537							
-7	.58	545							
-8	.66	542							
2-1	.52	528							
-2	.54	526							
-3	.51	527							
-4	.45	527							
-5	.44	526							
-6	.47	528							
-7	.54	530							
-8	.57	540							
Average									

44 x CO_2% + .32 x O_2% + .28 x N_2% = _____ (Md)

(_____ Md × _____1-Bws) + (18 × _____Bws) = _____ (Ms)

$$85.49 \times \_\_\_\_ Cp \times \sqrt{\frac{(\_\_\_\_\_)Ts\ °R}{\_\_\_\_ Ms \times \_\_\_\_ Ps}} \times \_\_\_\_ \sqrt{\Delta P} = \_\_\_\_ \text{ ft/sec (Vs)}$$

_____ Vs × _____ Flue Area × 60 = _____acfm

$$17.647 \times \_\_\_\_ acfm \times \frac{Ps}{Ts\ °R} = \_\_\_\_\_ scfm \times 60 = \_\_\_\_\_ scfh$$

© Mostardi Platt

Volumetric Flow Rate Determination Field Data Sheet

Project Number:	M170406	Date:	2/16/17
Client:	Eastfall Company	Test Number:	2
Test Location:	Outlet, Oxidizer Stack	Start Time:	10:39
Source Condition:	High	End Time:	10:48
Test Engineer:	DJH	Test Tech:	EMC

Duct Diameter 1.476 ft
Flue Area 2.71 ft²
Port Length 5 "
P_{bar} 29.23 "Hg
Static [illegible] "H_2O
Static _____ "Hg
P_s _____ "Hg

CO_2 % 0.50
O_2 % 19.50
N_2 % 80.00
Meter No. CM 19

Upstream Disturbance, Diameters >2
Downstream Disturbance, Diameters 107
Pitot ID [illegible] Pitot Coefficient (C_p) .84
Wet Bulb Temp N/A
Dry Bulb Temp N/A
B_{ws} 0.070
Fluke # N/A

Leak Checks Passed@
Pre 3/2 Inches H_2O
Post 3/6 Inches H_2O
Umbilical ID ___

Port-Point #	ΔP	Temp. °F	$\sqrt{\Delta P}$	Null Point Angle, Degrees	Port-Point #	ΔP	Temp. °F	$\sqrt{\Delta P}$	Null Point Angle, Degrees
1-1	.38	480							
-2	.38	484							
-3	.45	505							
-4	.44	512							
-5	.45	520							
-6	.62	520							
-7	.66	545							
-8	.68	549							
2-1	.44	499							
-2	.46	503							
-3	.46	504							
-4	.47	507							
-5	.58	514							
-6	.58	518							
-7	.63	531							
-8	.62	535							
Average									

44 x CO_2% + .32 x O_2% + .28 x N_2% = _____ (Md)

(_____ Md x _____1-Bws) + (18 x_____Bws) = _____ (Ms)

$$85.49 \times \_\_\_\_ Cp \times \sqrt{\frac{(\_\_\_\_\_)Ts\ °R}{\_\_\_\_ Ms \times \_\_\_\_ Ps}} \times \_\_\_\_ \sqrt{\Delta P} = \_\_\_\_ \text{ ft/sec (Vs)}$$

_____ Vs x _____ Flue Area x 60 = _____acfm

$$17.647 \times \_\_\_\_ acfm \times \frac{Ps}{Ts\ °R} = \_\_\_\_\_ scfm \times 60 = \_\_\_\_\_ scfh$$

© Mostardi Platt

Volumetric Flow Rate Determination Field Data Sheet

Project Number:	M170406	Date:	2/16/17
Client:	Eastbat Commis	Test Number:	3
Test Location:	Outlet, Oxidizer Stack	Start Time:	13:05
Source Condition:	High	End Time:	13:49
Test Engineer:	DJU	Test Tech:	EMC

Duct Diameter 1.476 ft
Flue Area 2.76 ft²
Port Length 5 "
P_{bar} 29.23 "Hg
Static 1.5 "H_2O
Static _____ "Hg
P_s _____ "Hg

CO_2 % 0.50
O_2 % 19.50
N_2 % 80.00
Meter No. CM19

Upstream Disturbance, Diameters >2
Downstream Disturbance, Diameters 10.7
Pitot ID [illegible] Pitot Coefficient (C_p) .84
Wet Bulb Temp N/A
Dry Bulb Temp N/A
B_{ws} 0.065
Fluke # N/A

Leak Checks Passed@
Pre 3.0 Inches H_2O
Post 3.5 Inches H_2O
Umbilical ID ___

Port-Point #	ΔP	Temp. °F	$\sqrt{\Delta P}$	Null Point Angle, Degrees	Port-Point #	ΔP	Temp. °F	$\sqrt{\Delta P}$	Null Point Angle, Degrees
1-1	.46	516							
-2	.49	520							
-3	.47	523							
-4	.42	551							
-5	.50	523							
-6	.53	521							
-7	.58	533							
-8	.60	535							
2-1	.35	515							
-2	.40	522							
-3	.40	523							
-4	.39	525							
-5	.53	526							
-6	.58	528							
-7	.65	542							
-8	.67	550							
Average									

44 x CO_2% + .32 x O_2% + .28 x N_2% = _____ (Md)

(_____ Md x _____1-Bws) + (18 x_____Bws) = _____ (Ms)

$$85.49 \times \_\_\_\_ Cp \times \sqrt{\frac{(\_\_\_\_\_)Ts\ °R}{\_\_\_\_ Ms \times \_\_\_\_ Ps}} \times \_\_\_\_ \sqrt{\Delta P} = \_\_\_\_ \text{ ft/sec (Vs)}$$

_____ Vs x _____ Flue Area x 60 = _____acfm

$$17.647 \times \_\_\_\_ acfm \times \frac{Ps}{Ts\ °R} = \_\_\_\_\_ scfm \times 60 = \_\_\_\_\_ scfh$$

© Mostardi Platt

Volumetric Flow Rate Determination Field Data Sheet

Project Number:	M170406	Date:	2/16/17
Client:	Eastbelt Comm	Test Number:	4
Test Location:	Outlet, Oxidizer Stack	Start Time:	14:09
Source Condition:	High	End Time:	14:14
Test Engineer:	DJH	Test Tech:	EMC

Duct Diameter 1.875 ft
Flue Area 2.76 ft²
Port Length 5 "
P_{bar} 29.27 "Hg
Static .5 "H_2O
Static _____ "Hg
P_s _____ "Hg

CO_2 % 0.50
O_2 % 19.50
N_2 % 80.00
Meter No. CM19

Upstream Disturbance, Diameters >2
Downstream Disturbance, Diameters 10.71
Pitot ID [illegible] Pitot Coefficient (C_p) .84
Wet Bulb Temp N/A
Dry Bulb Temp N/A
B_{ws} 0.069
Fluke # N/A

Leak Checks Passed@
Pre 3.0 Inches H_2O
Post 3.5 Inches H_2O
Umbilical ID ___

Port-Point #	ΔP	Temp. °F	$\sqrt{\Delta P}$	Null Point Angle, Degrees	Port-Point #	ΔP	Temp. °F	$\sqrt{\Delta P}$	Null Point Angle, Degrees
1-1	.35	521							
-2	.46	523							
-3	.46	523							
-4	.42	525							
-5	.43	532							
-6	.59	542							
-7	.66	545							
-8	.69	545							
2-1	.36	523							
-2	.42	531							
-3	.42	532							
-4	.38	535							
-5	.43	522							
-6	.55	526							
-7	.58	533							
-8	.62	534							
Average									

44 x CO_2% + .32 x O_2% + .28 x N_2% = _____ (Md)

(_____ Md × _____1-Bws) + (18 × _____Bws) = _____ (Ms)

85.49 × ____Cp × $\sqrt{\frac{(\_\_\_\_\_)Ts\ °R}{\_\_\_\_Ms \times \_\_\_\_Ps}}$ × ____ $\sqrt{\Delta P}$ = ____ ft/sec (Vs)

_____ Vs × _____ Flue Area × 60 = _____acfm

17.647 × _____acfm × $\frac{Ps}{Ts\ °R}$ = _____ scfm x 60 = _____ scfh

© Mostardi Platt

Volumetric Flow Rate Determination Field Data Sheet

Project Number:	M170406	Date:	2/16/17
Client:	East Brit Company	Test Number:	5
Test Location:	Outlet	Start Time:	15:11
Source Condition:		End Time:	15:20
Test Engineer:	DJR	Test Tech:	EMC

Duct Diameter 1.875 ft
Flue Area 2.76 ft²
Port Length 5 "
P_{bar} 29.23 "Hg
Static .5 "H_2O
Static ____ "Hg
P_s ____ "Hg

CO_2 % 0.50
O_2 % 19.50
N_2 % 80.00
Meter No. CM19

Upstream Disturbance, Diameters >2
Downstream Disturbance, Diameters 107"
Pitot ID [redacted] Pitot Coefficient (C_p) .84
Wet Bulb Temp NA
Dry Bulb Temp NA
B_{ws} 0.067
Fluke # NA

Leak Checks Passed@
Pre 3.0 Inches H_2O
Post 3.8 Inches H_2O
Umbilical ID ___

Port-Point #	ΔP	Temp. °F	$\sqrt{\Delta P}$	Null Point Angle, Degrees	Port-Point #	ΔP	Temp. °F	$\sqrt{\Delta P}$	Null Point Angle, Degrees
1-1	.59	515							
-2	.52	517							
-3	.54	518							
-4	.42	520							
-5	.43	522							
-6	.44	524							
-7	.55	530							
-8	.56	530							
2-1	.36	521							
-2	.36	520							
-3	.38	521							
-4	.44	525							
-5	.42	528							
-6	.53	524							
-7	.51	530							
-8	.60	536							
Average									

44 x CO_2% + .32 x O_2% + .28 x N_2% = _____ (Md)

(_____ Md x _____ 1-Bws) + (18 x _____ Bws) = _____ (Ms)

85.49 x ____ Cp x $\sqrt{\frac{(\_\_\_\_)Ts\ °R}{\_\_\_\_Ms \times \_\_\_\_Ps}}$ x ____ $\sqrt{\Delta P}$ = ____ ft/sec (Vs)

_____ Vs x _____ Flue Area x 60 = _____ acfm

17.647 x _____ acfm x $\frac{Ps}{Ts\ °R}$ = _____ scfm x 60 = _____ scfh

© Mostardi Platt

MOISTURE FIELD DATA SHEET

Project Name/Number: East Ball Commissary, Inc. Chicago, IL M170406 Date: 2/16/17
Test Location: Oxidizer Stack Source Condition: High
Test Method: Method 4 Meter ID: CM 19 Pre-Calibration Date: 2/13/17
Meter ΔH: 1.623 Meter Y: 0.980 Test Engineer: DSK

Test (Run) No. 1 Barometric Pressure (P_{bar}) 29.23 in. Hg
Static Pressure: 0.5 Stack Temperature: 520 (From Method M2 Test Data)
Gas Sample Analysis: 0.50 %CO_2 19.50 %O_2

Clock Time 24 hour	Meter Volume (Vm) ft3 or L (Circle One)	Meter Gage Pressure (ΔH) in. H_2O	Meter Inlet Temp. (t_m) °F	Meter Outlet Temp. (t_m) °F	Impinger Outlet Temp °F	Meter Vacuum "Hg
945	87.561	1.6	48	48	46	3
950	89.93		48	48	46	3
955	92.27		48	50	46	3
1000	94.61		49	50	47	3
1005	97.04		50	50	47	3
1010	99.38		50	50	47	3
1015	101.65		52	50	47	3
1020	103.96		52	50	49	3
1025	106.380		52	50	49	3
1030	108.675		52	50	49	3
Total Vol. in ft3 (Vm)=		Multiply total volume collected in Liters by 0.035315 to convert to ft^3				

Condensate: ___ / ___ / 250 mls (V_f) - ___ / ___ / 100 mls (V_i) = 30 mls gained

Silica Gel or Train: 242.7 grams (W_f) - 239.2 grams (W_i) = 3.5 grams gained

Average Meter Temperature: 50.00 (average of both inlet and outlet if applicable)

Comments:

Pre-Test Leak Check: 0.000 @ 10 "Hg
Post-Test Leak Check: 0.000 @ 10 "Hg

Test (Run) No. 2 Barometric Pressure (P_{bar}) 29.23 in. Hg
Static Pressure: 0.5 Stack Temperature: 520 (From Method M2 Test Data)
Gas Sample Analysis: 0.50 %CO_2 19.50 %O_2

Clock Time 24 hour	Meter Volume (Vm) ft3 or L (Circle One)	Meter Gage Pressure (ΔH) in. H_2O	Meter Inlet Temp. (t_m) °F	Meter Outlet Temp. (t_m) °F	Impinger Outlet Temp °F	Meter Vacuum "Hg
1220	8.926	1.6	52	50	47	3
1225	11.241		52	50	47	3
1230	13.56		52	51	48	3
1235	15.87		52	51	48	3
1240	18.25		53	51	49	3
1245	20.56		53	51	49	3
1250	22.93		53	52	50	3
1255	25.31		53	52	50	3
1300	27.62		54	52	50	3
1305	29.911		54	52	50	3
Total Vol. in ft3 (Vm)=		Multiply total volume collected in Liters by 0.035315 to convert to ft^3				

Condensate: ___ / ___ / 251 mls (V_f) - ___ / ___ / 250 mls (V_i) = 1 mls gained

Silica Gel or Train: 236.2 grams (W_f) - 232.3 grams (W_i) = 3.9 grams gained

Average Meter Temperature: 52.00 (average of both inlet and outlet if applicable)

Comments:

Pre-Test Leak Check: 0.000 @ 10 "Hg
Post-Test Leak Check: 0.000 @ 9 "Hg

© Mostardi Platt

MOISTURE FIELD DATA SHEET

Project Name/Number: East Bell Commissary Inc., Chicago, IL M170406 Date: 2/16/17
Test Location: Oxidizer Stack Source Condition: High
Test Method: Method 4 Meter ID: CM19 Pre-Calibration Date: 2/13/17
Meter ΔH: 1.623 Meter Y: 0.980 Test Engineer: DJK

Test (Run) No. 3 Barometric Pressure (P_{bar}) 29.23 in. Hg
Static Pressure: 0.50 Stack Temperature: 520 (From Method M2 Test Data)

Gas Sample Analysis: 0.50 %CO_2 19.50 %O_2

Clock Time 24 hour	Meter Volume (Vm) ft3 or L (Circle One)	Meter Gage Pressure (ΔH) in. H_2O	Meter Inlet Temp. (t_m) °F	Meter Outlet Temp. (t_m) °F	Impinger Outlet Temp °F	Meter Vacuum "Hg
1355	30.089	1.6	53	51	48	3
1400	32.48		53	51	49	3
1405	34.79		53	51	49	3
1410	37.16		54	51	50	3
1415	39.47		54	52	50	3
1420	41.82		54	52	50	3
1425	44.17		55	52	51	3
1430	46.52		55	53	51	3
1435	48.86		55	53	51	3
1440	51.231		55	53	51	3
Total Vol. in ft3 (Vm)=		Multiply total volume collected in Liters by 0.035315 to convert to ft^3				

Condensate: ___ / ___ / 268 mls (V_f) - ___ / ___ / 240 mls (V_i) = 28 mls gained

Silica Gel or Train: 251.6 grams (W_f) - 247.9 grams (W_i) = 3.7 grams gained

Average Meter Temperature: 53.00
(average of both inlet and outlet if applicable)

Comments:

Pre-Test Leak Check: 0.000 @ 10 "Hg

Post-Test Leak Check: 0.000 @ 10 "Hg

Test (Run) No. ___ Barometric Pressure (P_{bar}) ___ in. Hg
Static Pressure: ___ Stack Temperature: ___ (From Method ___ Test Data)

Gas Sample Analysis: ___ %CO_2 ___ %O_2

Clock Time 24 hour	Meter Volume (Vm) ft3 or L (Circle One)	Meter Gage Pressure (ΔH) in. H_2O	Meter Inlet Temp. (t_m) °F	Meter Outlet Temp. (t_m) °F	Impinger Outlet Temp °F	Meter Vacuum "Hg
Total Vol. in ft3 (Vm)=		Multiply total volume collected in Liters by 0.035315 to convert to ft^3				

Condensate: ___ / ___ / ___ mls (V_f) - ___ / ___ / ___ mls (V_i) = ___ mls gained

Silica Gel or Train: ___ grams (W_f) - ___ grams (W_i) = ___ grams gained

Average Meter Temperature: ___
(average of both inlet and outlet if applicable)

Comments:

Pre-Test Leak Check: ___ @ ___ "Hg

Post-Test Leak Check: ___ @ ___ "Hg

Volumetric Flow Rate Determination Field Data Sheet

Project Number: M170406
Client: East Bakt Commissary
Test Location: Proof Room 1
Source Condition:
Test Engineer: JMC / SD

Date: 1/24/17
Test Number: Proof Oxid.
Start Time: 0829-0929 ~~0925~~-
End Time: 1039-1139
Test Tech: 1217-1317

Duct Diameter _____ ft
Flue Area _____ ft²
Port Length _____"
P_{bar} _____ "Hg
Static _____ "H_2O
Static _____ "Hg
P_s _____ "Hg

CO_2 % _____
O_2 % _____
N_2 % _____
Meter No. _____

Upstream Disturbance, Diameters _____
Downstream Disturbance, Diameters _____
Pitot ID _____ Pitot Coefficient (C_p) _____
Wet Bulb Temp _____
Dry Bulb Temp _____
B_{ws} _____
Fluke # _____

Leak Checks Passed@
Pre _____ Inches H_2O
Post _____ Inches H_2O
Umbilical ID ___

	Proof Inlet ~~Port Point #~~	ft/min ~~ΔP~~	Proof Outlet ~~Temp. °F~~	ft/min ~~ΔP~~	Null Point Angle, Degrees	#1 Oven Inlet ~~Port Point #~~	#1 ~~ΔP~~	Oven Inlet ~~Temp. °F~~ #2	2 ~~ΔP~~	Null Point Angle, Degrees
	829	+100	829	+150		927	✓		✓	
	839	100		150		937	✓		✓	
R1	849	125		175	2025/14	947				
	859	150		175		957				
	909	150		175	144.6	1007				
	919	150		175		1017				
	929	15		175		1027				
	1039	100		150						
	1049	100		175						
	1059	125		175						
	1109	125		175	2000/					
R2	1119	125		150	142.9					
	1129	125		175						
	1139	125		175						
	1217	100		150						
	1227	125		175						
R3	1237	100		150	2000/14					
	1247	100		175						
	1257	125		175	142.9					
	1307	~~125~~	125	175						
	~~1307~~ 1317	125		175						

44 x CO_2% + .32 x O_2% + .28 x N_2% = _____ (Md)

(_____ Md x _____ 1-Bws) + (18 x _____ Bws) = _____ (Ms)

85.49 x ____Cp x $\sqrt{\frac{(\_\_\_\_)Ts\ °R}{\_\_\_Ms \times \_\_\_Ps}}$ x ____ $\sqrt{\Delta P}$ = ____ ft/sec (Vs)

_____ Vs x _____ Flue Area x 60 = _____ acfm

17.647 x _____ acfm x $\frac{Ps}{Ts\ °R}$ = _____ scfm x 60 = _____ scfh

Dwyer Dwyer Vaneometer 0-480 ft/min T39AB Cat. No. 480

© Mostardi Platt

Appendix G – Calibration Data and Response Time Data

© Mostardi Platt

MOSTARDI PLATT

Procedures for Calibration

Temperature Sensing Devices

The potentiometer and thermocouples are calibrated utilizing a NIST traceable millivolt source.

Pitot Tubes

The pitot tubes utilized during this test program are manufactured according to the specification described and illustrated in the *Code of Federal Regulations*, Title 40, Part 60, Appendix A, Methods 1 and 2. The pitot tubes comply with the alignment specifications in Method 2, Section 4; and the pitot tube assemblies are in compliance with specifications in the same section.

© Mostardi Platt

CALIBRATION SUMMARY

Project Number: M170406
Client: EAST BAY COMMISSARY
Test Location: OXIDIZER INC + BOTTLE

Date: 11/26/2017
Operator: J. MEI
Box Truck: 10

Analyzer Type, S/N, and Span	Cal Level	Cylinder ID Serial Number	Expected Cal Value	Actual Response	Difference As % of Span	Cylinder Pressure (psi)	Cylinder Expiration Date
~~NOx~~ PROPANE	Zero	N/A	0	-1.90	0.02	N/A	N/A
	Low ~~Mid~~	CC159450	3003	2998.8	0.14	900	8/7/22
	Mid ~~High~~	CC332246	6023	6015.81	-0.71	800	1/2/23
~~CO~~ $_2$	High ~~Zero~~	CC340799	8079	8850.17	-1.97	1700	1/5/25
CH4	Zero ~~Mid~~	N/A	0	-0.90	0.01	N/A	N/A
	Low ~~High~~	XC0016148B	200.9	202.14	-0.04	1500	9/7/24
~~CO2~~ METHANE	Mid ~~Zero~~	CC5D261	597.3	597.44	0	1300	10/20/23
	High ~~Mid~~	CC432477	919.8	917.22	0.03	1500	5/22/22
	Zero ~~High~~	N/A	0	0.01	0	N/A	N/A
~~O2~~ ETHANOL	Low ~~Zero~~	CC506464	27.2	27.21	0	1400	1/6/20
	Mid	CC506457	51.0	51.02	0	1100	1/6/20
	High	ALM014429	80.0	80.03	0	1400	1/10/20
~~CO~~ CH4 METHANE	Zero	N/A	0	0.20	0	N/A	N/A
	Low ~~Mid~~	XC0016148B	200.9	201.99	-0.04	1500	9/7/24
	Mid ~~High~~	CC5D261	597.3	597.78	-0.01	1300	10/20/23
	HIGH	CC432477	919.8	922.07	-0.03	1500	5/22/22

© Mostardi Platt

Client: East Bell Commissary, LLC
Facility: Chicago, Illinois
Project #: M170406

Location: Catalytic Oxidizer (Mid Inlet Loading)
Date: 1/26/17
Operator: T.Mel

Type	Setting	Cylinder ID	Cylinder Value	Predicted Value	Predicted Value Difference, %	Analyzer Response	Difference, % of Cylinder	Expiration Date	Final Bottle Pressure, PSI	Cylinder % of span
NMHC ppmv Inlet A	Zero	N/A	0	N/A	N/A	-1.90	0.02%	N/A	N/A	N/A
	Low	CC159456	3003	3060.88	2.07%	2998.80	0.14%	8/7/2022	900	34.60%
	Mid	CC332245	6033	6151.41	1.25%	6075.81	-0.71%	1/2/2023	800	69.51%
	High	CC340799	8679	N/A	N/A	8650.17	-1.97%	1/5/2025	1700	100.00%
CH4 ppmv Inlet A	Zero	N/A	0	N/A	N/A	-0.90	0.01%	N/A	N/A	N/A
	Low	XC001669B	200.9	199.70	-1.22%	202.14	-0.04%	9/7/2024	1500	21.84%
	Mid	CC50261	597.3	595.50	-0.32%	597.44	0.00%	10/20/2023	1300	64.94%
	High	CC432477	919.8	N/A	N/A	917.52	0.03%	5/22/2022	1500	100.00%
NMHC ppmv outlet	Zero	N/A	0	N/A	N/A	0.01	0.00%	N/A	N/A	N/A
	Low	CC506464	27.2	27.22	0.02%	27.21	0.00%	1/6/2020	1400	33.58%
	Mid	CC506457	51	51.02	0.01%	51.02	0.00%	1/6/2020	1100	62.96%
	High	ALM014429	80	N/A	N/A	80.03	0.00%	1/10/2020	1400	98.77%
CH4 ppmv outlet	Zero	N/A	0	N/A	N/A	0.20	0.00%	N/A	N/A	N/A
	Low	XC001669B	200.9	201.55	-0.22%	201.99	-0.04%	9/7/2024	1500	21.84%
	Mid	CC50261	597.3	598.84	0.18%	597.78	-0.01%	10/20/2023	1300	64.94%
	High	CC432477	919.8	N/A	N/A	922.07	-0.03%	5/22/2022	1500	100.00%

Response Time Data

Type	RM Analyzer s/n	Analyzer Span	RM Gas Span
NMHC ppmv inlet A	1433763284	10000	8679
CH4 ppmv inlet A	1433763284	5000	919.8
NMHC ppmv outlet	1160990215	500	81
CH4 ppmv outlet	1160990215	5000	920
	Start	95% Response	Time (min)
Upscale			1.5
Downscale			1.5

© Mostardi Platt

Client:	East Balt Commissary, LLC	Location:	Catalytic Oxidizer (Mid Inlet Loading)
Facility:	Chicago, Illinois	Date:	1/26/17
Fuel Type:	Natural Gas	Operator:	T.Mei
Fuel Factor:	8710	Project #:	M170406
Diluent:	O2 %	Fuel Factor: by	Standard

NMHC ppmv Inlet A Correction Data

Run #	Cma	Precal	Postcal	Pre zero	Post zero	Co	Cm	C	Cgas	Span Bias	Span Drift	Zero Bias	Zero Drift
1	6033.00	6075.81	5931.79	-1.90	-1.88	-1.89	6003.80	290.10	290.1	1.66	-1.66	0.00	0.00
2	6033.00	5931.79	5901.64	-1.88	-1.83	-1.86	5916.72	282.40	282.4	2.01	-0.35	0.00	0.00
3	6033.00	5901.64	6087.85	-1.83	-1.80	-1.82	5994.75	282.60	282.6	-0.14	2.15	0.00	0.00

CH4 ppmv Inlet A Correction Data

Run #	Cma	Precal	Postcal	Pre zero	Post zero	Co	Cm	C	Cgas	Span Bias	Span Drift	Zero Bias	Zero Drift
1	597.30	597.44	597.45	-0.90	-0.91	-0.91	597.45	122.70	122.7	0.00	0.00	0.00	0.00
2	597.30	597.45	597.46	-0.91	-0.90	-0.91	597.46	48.30	48.3	0.00	0.00	0.00	0.00
3	597.30	597.46	597.49	-0.90	-1.04	-0.97	597.48	65.50	65.5	-0.01	0.00	0.02	-0.02

NMHC ppmv outlet Correction Data

Run #	Cma	Precal	Postcal	Pre zero	Post zero	Co	Cm	C	Cgas	Span Bias	Span Drift	Zero Bias	Zero Drift
1	51.00	51.02	51.02	0.01	0.02	0.02	51.02	16.50	16.5	0.00	0.00	-0.01	0.01
2	51.00	51.02	51.02	0.02	0.02	0.02	51.02	8.10	8.1	0.00	0.00	-0.01	0.00
3	51.00	51.02	51.02	0.02	0.02	0.02	51.02	10.10	10.1	0.00	0.00	-0.01	0.00

CH4 ppmv outlet Correction Data

Run #	Cma	Precal	Postcal	Pre zero	Post zero	Co	Cm	C	Cgas	Span Bias	Span Drift	Zero Bias	Zero Drift
1	597.30	597.78	599.07	0.20	0.16	0.18	598.43	84.40	84.4	-0.14	0.14	0.00	0.00
2	597.30	599.07	599.15	0.16	0.24	0.20	599.11	38.30	38.3	-0.15	0.01	0.00	0.01
3	597.30	599.15	599.07	0.24	0.21	0.23	599.11	44.50	44.5	-0.14	-0.01	0.00	0.00

Cma = Concentration of Cal Gas C = Average value of test Co=Average Pre and Post Zero
Cm=Average Pre and Post Span Cgas = Corrected gas value of test

Calibration Corrected Data

Run #	Run Date	Start Time	End Time	NMHC ppmv Inlet A	CH4 ppmv Inlet A	NMHC ppmv outlet	CH4 ppmv outlet
1	1/26/17	10:10	11:09	290.1	122.7	16.5	84.4
2	1/26/17	12:15	13:14	282.4	48.3	8.1	38.3
3	1/26/17	13:55	15:09	282.6	65.5	10.1	44.5

© Mostardi Platt

Client: East Balt Commissary, LLC
Facility: Chicago, Illinois
Project #: M170406
Location: Catalytic Oxidizer (Mid Inlet Loading)
Date: 1/26/17

Linearity Cal/Pre 1 Cal

Time	NMHC ppmv Inlet A		CH4 ppmv Inlet A		NMHC ppmv outlet		CH4 ppmv outlet	
6:47	1492.7		-1.0		0.0		922.05	
6:48	1492.8		-0.9		0.0		922.07	h
6:49	1492.7		-0.9		0.0		912.91	
6:50	1145.2		-1.0		0.0		900.45	
6:51	907.7		-1.0		0.0		724.20	
6:52	4525.1		-1.1		0.0		201.74	
6:53	4510.9		-1.0		0.0	z	201.99	l
6:54	4489.6		-0.9		0.0		197.85	
6:55	4489.6		-1.0		0.0		193.05	
6:56	4490.8		-0.9		0.0		177.16	
6:57	4492.2		-0.9		0.0		45.29	
6:58	2560.5		-0.9		0.0		603.01	
6:59	1212.9		-0.9		0.0		601.77	
7:00	2980.5		-0.9		0.0		597.79	
7:01	2980.5		-0.9		0.0		597.78	m
7:02	2988.8		-0.9		0.0		601.93	
7:03	2998.8		-1.0		158.0		417.38	
7:04	2998.8	l	-1.0		506.9		2.78	
7:05	2998.8		-1.1		293.4		1.44	
7:06	2998.9		-1.0		80.0		0.17	
7:07	5804.3		-0.9		80.0		0.17	
7:08	8818.7		-0.9		80.0	h	0.18	
7:09	8842.1		-0.9		80.0		0.21	
7:10	8850.2	h	-0.9		80.0		0.20	z
7:11	8855.9		-0.9		80.0		0.21	
7:12	6084.6		-0.9	z	79.9		0.18	
7:13	1788.7		-1.0		68.2		1.39	
7:14	6075.3		-0.9		38.6		1.66	
7:15	6075.8	m	-0.9		17.3		0.21	
7:16	6078.3		-1.0		25.4		0.23	
7:17	6080.5		-1.0		27.2		0.18	
7:18	5446.17		206.23		27.21		0.2	
7:19	589.62		2459.66		27.21	l	0.2	
7:20	-1.87		9999.65		27.21		0.21	
7:21	-1.96		9999.67		27.21		0.18	
7:22	-1.86		3793.56		27.21		0.23	
7:23	-1.9	z	917.58		26.88		0.21	
7:24	-1.98		917.52	h	19.03		0.24	
7:25	-1.97		919.5		30.48		0.2	
7:26	-1.94		297.2		39.28		0.22	
7:27	-1.95		172.03		51.02		0.21	
7:28	-1.92		204.53		51.02		0.23	
7:29	-1.91		202.12		51.02		0.21	
7:30	-1.94		202.14	l	51.02	m	0.22	
7:31	-2.01		202.06		51.02		0.21	
7:32	-2.02		202.02		51.01		0.24	
7:33	-1.91		179.56		51.02		0.24	
7:34	-1.77		58.99		63		0.84	
7:35	-1.84		602.69		89.81		2.85	
7:36	-1.93		602.75		36.59		2.85	
7:37	-1.89		601.2		20.89		2.84	
7:38	-1.93		597.44	m	17.94		17.22	
7:39	-1.93		597.47		61.55		145.42	

© Mostardi Platt

Client: East Bait Commissary, LLC
Facility: Chicago, Illinois
Project #: M170406

Location: Catalytic Oxidizer (Mid Inlet Loading)
Date: 1/26/17

Post 1/Pre 2

Time	NMHC ppmv Inlet A		CH4 ppmv Inlet A		NMHC ppmv outlet		CH4 ppmv outlet	
11:16	6029.5		-1.0		0.02		547.57	
11:17	5931.8	m	-0.9		0.02		550.96	
11:18	5851.4		-0.9		0.02		599.03	
11:19	5776.2		-0.9	z	0.02	z	599.07	m
11:20	4607.3		-0.9		0.02		597.22	
11:21	2920.7		-1.0		0.02		591.88	
11:22	2920.7		-1.1		0.02		614.88	
11:23	2962.3		-1.0		0.34		564.22	
11:24	2998.7		-1.0		5.37		4.02	
11:25	2998.7		-0.9		19.83		1.48	
11:26	2993.7		-1.0		30.70		1.47	
11:27	1340.2		217.7		38.29		1.47	
11:28	129.3		469.8		38.55		1.47	
11:29	39.2		552.1		43.74		0.92	
11:30	31.8		554.6		51.02		0.17	
11:31	29.1		555.9		51.02		0.16	z
11:32	1.3		593.4		51.02	m	0.18	
11:33	-1.9	z	597.5	m	51.02		0.20	

Post 2/Pre 3

Time	NMHC ppmv Inlet A		CH4 ppmv Inlet A		NMHC ppmv outlet		CH4 ppmv outlet	
13:28	-1.8	z	597.6		51.02		0.24	
13:29	-1.9		597.5		51.02	m	0.24	z
13:30	53.6		597.5	m	50.82		0.22	
13:31	68.7		593.8		52.61		0.21	
13:32	4060.1		178.9		47.80		280.63	
13:33	5781.3		-0.1		31.28		628.21	
13:34	5799.9		-1.0		18.49		630.29	
13:35	5825.4		-0.9		12.60		628.52	
13:36	5853.8		-1.0		9.34		637.91	
13:37	5879.0		-0.9	z	7.38		643.56	
13:38	5901.6	m	-0.9		1.74		609.50	
13:39	3693.0		16.1		0.02	z	599.14	
13:40	1952.0		19.8		0.02		599.15	m

Post 3

Time	NMHC ppmv Inlet A		CH4 ppmv Inlet A		NMHC ppmv outlet		CH4 ppmv outlet	
15:17	7513.8		-1.1		0.02		599.07	m
15:18	6907.9		-1.0		0.02	z	599.11	
15:19	6368.1		-1.0	z	4.95		161.83	
15:20	6087.7		-1.1		15.07		1.90	
15:21	6087.9	m	-1.0		24.97		1.50	
15:22	2855.8		-1.0		28.14		1.49	
15:23	178.8		294.8		49.12		0.33	
15:24	132.0		572.8		51.02		0.21	z
15:25	104.1		575.4		51.02	m	0.25	
15:26	91.2		576.7		51.03		0.23	
15:27	32.3		589.8		38.36		1.87	
15:28	-1.8		597.5		21.19		2.88	
15:29	-1.8	z	597.5	m	15.44		2.83	
15:30	-1.8		597.5		11.01		2.84	
15:31	-1.9		597.5		8.25		2.81	

© Mostardi Platt

CALIBRATION SUMMARY

Project Number: M170406
Client: East Bay Commissary
Test Location: Oxidizer Inlet + Outlet

Date: 1/27/17
Operator: S. Mei
Box Truck: 10

Analyzer Type, S/N, and Span	Cal Level	Cylinder ID Serial Number	Expected Cal Value	Actual Response	Difference As % of Span	Cylinder Pressure (psi)	Cylinder Expiration Date
Propane 0-1000	Zero	N/A	0.0	-1.00	0.11	N/A	N/A
	low	CC318789	299.9	300.24	-0.11	1450	7/6/23
	MID	CC27334	599.6	600.26	-0.11	1600	5/23/24
	HIGH	SG9115220BA	908.9	908.69	0.02	1100	12/30/27
chy 0-1000	Zero	N/A	0.0	-0.53	0.06	N/A	N/A
	low	XC001669B	200.9	200.17	0.24	1700	9/7/24
	MID	CC50261	597.3	605.95	-1.44	500	10/20/23
	HIGH	CC432477	919.8	919.55	0.03	500	5/22/22
Ethanol 0-100	Zero	N/A	0.0	0.0	0.0	N/A	N/A
	low	CC506464	27.2	27.20	0.0	1300	1/6/20
	Mid	CC506457	51.0	51.01	0.0	500	1/6/20
	High	ALM014429	80.0	80.04	0.0	1200	1/10/20
Chrt 0-1000	Zero	N/A	0.0	0.01	0.0	N/A	N/A
	low	XC001669B	200.9	200.69	0.07	1700	9/7/24
	MID	CC50261	597.3	599.06	-0.29	500	10/20/23
	HIGH	CC432477	919.8	922.18	-0.26	500	5/22/22

© Mostardi Platt

Client: East Balt Commissary, LLC
Facility: Chicago, Illinois
Project #: M170406

Location: Catalytic Oxidizer (Low Inlet Loading)
Date: 1/27/17
Operator: T.Mel

Type	Setting	Cylinder ID	Cylinder Value	Predicted Value	Predicted Value Difference, %	Analyzer Response	Difference, % of Cylinder	Expiration Date	Final Bottle Pressure, PSI	Cylinder % of span
NMHC ppmv Inlet A	Zero	N/A	0	N/A	N/A	-1.00	0.11%	N/A	N/A	N/A
	Low	CC318789	299.9	299.16	-0.36%	300.24	-0.11%	7/6/2023	1450	33.00%
	Mid	CC27334	599.6	599.12	-0.19%	600.26	-0.11%	5/23/2024	1600	65.97%
	High	SG9115220BAL	908.9	N/A	N/A	908.69	0.02%	12/30/2023	1100	100.00%
CH4 ppmv Inlet A	Zero	N/A	0	N/A	N/A	-0.53	0.06%	N/A	N/A	N/A
	Low	XC0016698	200.9	200.43	0.13%	200.17	0.24%	9/7/2024	1700	21.84%
	Mid	CC50261	597.3	598.85	-1.51%	605.85	-1.44%	10/20/2023	500	64.94%
	High	CC432477	919.8	N/A	N/A	919.55	0.03%	5/22/2022	500	100.00%
NMHC ppmv outlet	Zero	N/A	0	N/A	N/A	0.00	0.00%	N/A	N/A	N/A
	Low	CC506464	27.2	27.21	0.05%	27.20	0.00%	1/6/2020	1300	33.58%
	Mid	CC506457	51	51.03	0.03%	51.01	0.00%	1/6/2020	500	62.96%
	High	ALM014429	80	N/A	N/A	80.04	0.00%	1/10/2020	1200	98.77%
CH4 ppmv outlet	Zero	N/A	0	N/A	N/A	0.01	0.00%	N/A	N/A	N/A
	Low	XC0016698	200.9	201.43	0.37%	200.69	0.07%	9/7/2024	1700	21.84%
	Mid	CC50261	597.3	598.85	-0.04%	599.06	-0.29%	10/20/2023	500	64.94%
	High	CC432477	919.8	N/A	N/A	922.18	-0.26%	5/22/2022	500	100.00%

Response Time Data			
Type	RM Analyzer s/n	Analyzer Span	RM Gas Span
NMHC ppmv inlet A	1433763284	5000	908.9
CH4 ppmv inlet A	1433763284	5000	919.8
NMHC ppmv outlet	1160990215	500	81
CH4 ppmv outlet	1160990215	5000	920
	Start	95% Response	Time (min)
Upscale			1.5
Downscale			1.5

© Mostardi Platt

Client: East Balt Commissary, LLC
Facility: Chicago, Ilinois
Fuel Type: Natural Gas
Fuel Factor: 8710
Diluent: O2 %

Location: Catalytic Oxidizer (Low Inlet Loading)
Date: 1/27/17
Operator: T.Mei
Project #: M170406
Fuel Factor: by Standard

NMHC ppmv Inlet A Correction Data

Run #	Cma	Precal	Postcal	Pre zero	Post zero	Co	Cm	C	Cgas	Span Bias	Span Drift	Zero Bias	Zero Drift
1	599.60	600.26	600.27	-1.00	-0.89	-0.95	600.27	522.10	522.1	0.00	0.00	-0.01	0.01
2	599.60	600.27	600.27	-0.89	-0.94	-0.92	600.27	440.80	440.8	0.00	0.00	-0.01	-0.01
3	599.60	600.27	600.29	-0.94	-1.02	-0.98	600.28	454.70	454.7	0.00	0.00	0.00	-0.01

CH4 ppmv Inlet A Correction Data

Run #	Cma	Precal	Postcal	Pre zero	Post zero	Co	Cm	C	Cgas	Span Bias	Span Drift	Zero Bias	Zero Drift
1	597.30	605.85	598.81	-0.53	-0.53	-0.53	601.38	16.20	16.2	0.99	-0.99	0.00	0.00
2	597.30	598.81	598.06	-0.53	-0.52	-0.53	597.44	16.10	16.1	0.88	0.14	0.00	0.00
3	597.30	598.06	596.67	-0.52	-0.71	-0.62	597.37	16.80	16.8	1.01	-0.15	0.02	-0.02

NMHC ppmv outlet Correction Data

Run #	Cma	Precal	Postcal	Pre zero	Post zero	Co	Cm	C	Cgas	Span Bias	Span Drift	Zero Bias	Zero Drift
1	51.00	51.01	51.01	0.00	0.00	0.00	51.01	4.10	4.1	0.00	0.00	0.00	0.00
2	51.00	51.01	51.02	0.00	0.00	0.00	51.02	4.40	4.4	-0.01	0.01	0.00	0.00
3	51.00	51.02	51.01	0.00	-0.01	-0.01	51.02	7.60	7.6	0.00	-0.01	0.01	-0.01

CH4 ppmv outlet Correction Data

Run #	Cma	Precal	Postcal	Pre zero	Post zero	Co	Cm	C	Cgas	Span Bias	Span Drift	Zero Bias	Zero Drift
1	597.30	599.06	599.07	0.01	0.01	0.01	599.07	15.50	15.5	0.00	0.00	0.00	0.00
2	597.30	599.07	599.05	0.01	0.01	0.01	599.06	15.30	15.3	0.00	0.00	0.00	0.00
3	597.30	599.05	599.05	0.01	-0.02	-0.01	599.05	15.40	15.4	0.00	0.00	0.00	0.00

Cma = Concentration of Cal Gas
Cm=Average Pre and Post Span
C = Average value of test
Cgas = Corrected gas value of test
Co=Average Pre and Post Zero

Calibration Corrected Data

Run #	Run Date	Start Time	End Time	NMHC ppmv inlet A	CH4 ppmv inlet A	NMHC ppmv outlet	CH4 ppmv outlet
1	1/27/17	6:50	7:49	522.1	16.2	4.1	15.5
2	1/27/17	8:40	9:39	440.8	16.1	4.4	15.3
3	1/27/17	10:35	11:34	454.7	16.8	7.6	15.4

© Mostardi Platt

Client: East Balt Commissary, LLC
Facility: Chicago, Illinois
Project #: M170406
Location: Catalytic Oxidizer (Low Inlet Loading)
Date: 1/27/17

Linearity Cal/Pre 1 Cal

Time	NMHC ppmv Inlet A		CH4 ppmv Inlet A		NMHC ppmv outlet		CH4 ppmv outlet	
5:43	-1.0	z	2.0		0.0		922.22	
5:44	-1.0		2.0		0.0		922.18	h
5:45	482.7		0.6		0.0		922.17	
5:46	906.0		-0.6		0.0		503.27	
5:47	907.3		-0.6		0.0		203.32	
5:48	908.7		-0.6		0.0		204.04	
5:49	908.7	h	-0.6		0.0		202.77	
5:50	908.7		-0.5		0.0		200.69	l
5:51	425.0		0.9		0.0		201.96	
5:52	141.3		0.8		0.0		179.76	
5:53	280.9		-0.5		0.0		300.70	
5:54	282.8		-0.5	z	0.0		593.82	
5:55	300.5		-0.5		0.0		597.49	
5:56	300.5		-0.6		0.0		599.03	
5:57	300.2	l	-0.6		0.0	z	599.06	m
5:58	353.0		-0.6		0.0		599.06	
5:59	623.3		-0.5		0.0		601.37	
6:00	634.9		-0.5		4.2		363.63	
6:01	617.0		-0.5		30.7		2.15	
6:02	600.3		-0.6		75.4		1.33	
6:03	600.3		-0.5		94.6		1.38	
6:04	600.3	m	-0.5		82.7		0.27	
6:05	600.3		-0.6		80.0		0.03	
6:06	269.5		569.0		80.1		0.02	
6:07	-1.0		1035.0		80.1		0.01	z
6:08	-1.0		994.6		80.0	h	-0.02	
6:09	-1.0		919.6		80.1		0.03	
6:10	-1.0		919.6	h	80.0		0.05	
6:11	-1.0		914.3		79.6		0.02	
6:12	-1.0		913.8		40.0		0.02	
6:13	-1.0		646.4		21.2		0.02	
6:14	-0.98		202.38		20.91		0.01	
6:15	-1		201.46		27.2		0.02	
6:16	-0.95		201.11		27.2		0.03	
6:17	-0.98		200.17	l	27.2	l	0.05	
6:18	-0.97		200.45		27.2		0.03	
6:19	-0.91		275.18		27.2		0.04	
6:20	-0.94		603.59		41.38		0.31	
6:21	-0.99		604.79		160.11		2.44	
6:22	-0.94		605.95	m	36.94		0.03	
6:23	-1		606.01		43.66		0.03	
6:24	-1.02		597.2		47.83		0.02	
6:25	-0.99		4.74		51.02		0.03	
6:26	-1		3.39		51.02		0.04	
6:27	-0.97		2.17		51.01	m	0.02	
6:28	-0.97		2.11		51.01		0.01	
6:29	-0.95		2.12		51.01		-0.01	

© Mostardi Platt

Client: East Balt Commissary, LLC
Facility: Chicago, Illinois
Project #: M170406

Location: Catalytic Oxidizer (Low Inlet Loading)
Date: 1/27/17

Post 1/Pre 2

Time	NMHC ppmv inlet A		CH4 ppmv inlet A		NMHC ppmv outlet		CH4 ppmv outlet	
8:00	83.5		512.0		51.02		0.06	
8:01	67.6		44.6		51.01		0.04	
8:02	56.0		-0.3		51.01	m	0.01	z
8:03	47.0		-0.6		51.02		0.07	
8:04	39.3		-0.5		50.96		0.03	
8:05	32.9		-0.5	z	62.65		5.38	
8:06	27.6		-0.6		78.82		183.14	
8:07	419.7		-0.6		39.54		588.05	
8:08	576.2		-0.6		27.84		583.06	
8:09	578.1		-0.5		11.14		592.71	
8:10	600.3		-0.6		0.00		599.11	
8:11	600.3	m	-0.6		0.00	z	599.07	m
8:12	600.3		-0.6		3.97		592.43	
8:13	542.9		1.3		10.73		206.76	
8:14	153.7		67.9		12.04		17.56	
8:15	9.1		555.8		11.21		17.15	
8:16	7.9		559.9		10.68		17.11	
8:17	6.2		567.3		10.29		17.15	
8:18	-1.0		596.8		11.46		17.13	
8:19	-0.9	z	596.8	m	11.85		16.52	

Post 2/Pre 3

Time	NMHC ppmv inlet A		CH4 ppmv inlet A		NMHC ppmv outlet		CH4 ppmv outlet	
9:49	1068.7		-0.5		51.02	m	0.03	
9:50	946.1		-0.5		54.05		0.03	
9:51	864.9		-0.6		57.95		0.01	z
9:52	807.8		-0.5		46.46		0.06	
9:53	776.4		-0.5		36.10		112.49	
9:54	626.7		-0.5		29.14		563.36	
9:55	600.3		-0.5		22.03		570.42	
9:56	600.3		-0.5		17.85		579.84	
9:57	600.3		-0.5	z	13.86		570.11	
9:58	600.3	m	-0.5		5.31		587.98	
9:59	600.3		-0.5		-0.01		599.08	
10:00	600.3		-0.5		0.00	z	599.05	m
10:01	592.5		-0.5		2.57		607.48	
10:02	593.3		-0.5		9.82		213.98	
10:03	320.7		26.0		11.92		28.39	
10:04	97.5		158.4		11.58		27.47	
10:05	42.7		194.5		8.20		21.41	
10:06	40.5		537.7		5.26		17.13	
10:07	9.4		599.4		13.15		17.17	
10:08	-1.0		596.8		17.38		17.11	
10:09	-0.9	z	598.1	m	13.20		16.47	

Post 3

Time	NMHC ppmv inlet A		CH4 ppmv inlet A		NMHC ppmv outlet		CH4 ppmv outlet	
11:46	-1.0		596.7		51.01		-0.01	
11:47	-1.1		596.7	m	51.01	m	-0.02	z
11:48	-1.0	z	596.7		51.01		-0.03	
11:49	77.6		536.9		45.67		0.79	
11:50	787.9		-0.7		38.38		112.81	
11:51	801.9		-0.7		31.74		191.73	
11:52	784.2		-0.7	z	26.64		191.19	
11:53	688.3		-0.7		16.61		333.94	
11:54	600.3		-0.7		-0.01		599.09	
11:55	600.3	m	-0.7		-0.01	z	599.05	m

© Mostardi Platt

Project Number: M170406

		1 THC ppm		
27-Jan-17	14:43	3.33		
27-Jan-17	14:44	3.34		
27-Jan-17	14:45	0.15		
27-Jan-17	14:46	0.08		
27-Jan-17	14:47	0.09	0.0 ppm propane calibration	
27-Jan-17	14:48	1.12		
27-Jan-17	14:49	359.92		
27-Jan-17	14:50	598.51		
27-Jan-17	14:51	598.14		
27-Jan-17	14:52	600.17	599.6 ppm propane calibration	
27-Jan-17	14:53	316.53		
27-Jan-17	14:54	459.33		
27-Jan-17	14:55	904.34		
27-Jan-17	14:56	904.25		
27-Jan-17	14:57	904.03	908.9 ppm propane calibration	
27-Jan-17	14:58	92.05		
27-Jan-17	14:59	249.6		
27-Jan-17	15:00	300.19		
27-Jan-17	15:01	300.07		
27-Jan-17	15:02	299.92	299.9 ppm propane calibration	
27-Jan-17	15:03	179.38		
27-Jan-17	15:04	386.58		
27-Jan-17	15:05	391.7	868 ppm ethanol calibration as propane	393.6
27-Jan-17	15:06	393.02		
27-Jan-17	15:07	393.8		
27-Jan-17	15:08	394.48		
27-Jan-17	15:09	395.02		
27-Jan-17	15:10	269.18		
27-Jan-17	15:11	185.97		
27-Jan-17	15:12	239.57	525.2 ppm ethanol calibration as propane	241.1
27-Jan-17	15:13	240.85		
27-Jan-17	15:14	241.4		
27-Jan-17	15:15	241.69		
27-Jan-17	15:16	241.87		
27-Jan-17	15:17	130.11		
27-Jan-17	15:18	12.26		
27-Jan-17	15:19	8.03		
27-Jan-17	15:20	6.59		
27-Jan-17	15:21	63.24		
27-Jan-17	15:22	118.91		
27-Jan-17	15:23	120.47	274 ppm ethanol calibration as propane	121.4
27-Jan-17	15:24	121.02		
27-Jan-17	15:25	121.23		
27-Jan-17	15:26	121.62		
27-Jan-17	15:27	121.84		
27-Jan-17	15:28	121.96		
27-Jan-17	15:29	61.07		
27-Jan-17	15:30	9.97		
27-Jan-17	15:31	0.74		
27-Jan-17	15:32	0.32	0.0 ppm propane calibration	
27-Jan-17	15:33	2.56		
27-Jan-17	15:34	520.74		
27-Jan-17	15:35	604.11		
27-Jan-17	15:36	604.23		
27-Jan-17	15:37	604.45	599.6 ppm propane calibration	

© Mostardi Platt

Method 25A Calibration Summary

Project: East Belt Commissary
Client: M170406
Location:

Date: 2/16/17
Operator: JFK
Analyzer ID: Inlet TECO 55i
Analyzer Range: Outlet TECO 55i

Cal Run	Cal Level	Test Location	Cylinder ID Serial Number	Cal Gas Type	Cal Time	Expected Cal Value	Actual Response	Difference (% of cal value)	Drift (% of span)	Cylinder Pressure
~~Pre 1~~	Zero	Inlet as propane				0			N/A	
	Low					304.0			N/A	
	Mid					602.4			N/A	
	High					900.1			N/A	
~~Post 1/ Pre 2~~	Zero	Outlet as propane				0				
	Low					10.05				
	Mid					20.02				
	High					30.0				
Post 2/ Pre 3	Zero									
	Low									
	Mid									
	High									
Post 3	Zero									
	Low									
	Mid									
	High									
	Zero									
	Low									
	Mid									
	High									
	Zero									
	Low									
	Mid									
	High									

© Mostardi Platt

Client: East Balt Commissary, LLC
Facility: Chicago Illinois
Project #: M170406

Location: Catalytic Oxidizer (High Inlet Loading)
Date: 2/16/17
Operator: JFR

Type	Setting	Cylinder ID	Cylinder Value	Predicted Value	Predicted Value Difference, %	Analyzer Response	Difference, % of Cylinder	Expiration Date	Final Bottle Pressure, PSI
CH4 ppmv Inlet A	Zero		0	N/A	N/A	0.10	-0.01%		
	Low	CC409723	300	300.36	-0.41%	301.60	-0.53%	11/1/2022	1100
	Mid	CC287877	591.8	592.42	0.70%	588.30	0.59%	8/7/2023	700
	High	CC16977	906	N/A	N/A	906.90	-0.10%	4/1/2021	1400
NMHC ppmv Inlet	Zero		0	N/A	N/A	12.30	-1.38%		
	Low	CC49362	304	304.65	0.15%	304.20	-0.07%	5/23/2024	1500
	Mid	EB0061670	603.4	592.57	-1.88%	603.90	-0.08%	4/18/2024	800
	High	SG9161407BAL	900.1	N/A	N/A	877.90	2.45%	5/23/2024	1000
CH4 ppmv outlet	Zero		0	N/A	N/A	0.00	0.00%		
	Low	CC331352	29.94	30.02	-0.61%	30.20	-0.09%	3/8/2021	1200
	Mid	CC420342	60.77	60.93	-1.27%	61.70	-0.18%	11/5/2020	1000
	High	CC46317	93.36	N/A	N/A	93.60	-0.03%	6/8/2022	900
NMHC ppmv Outlet	Zero		0	N/A	N/A	0.00	0.00%		
	Low	CC452299	10.05	10.05	-0.50%	10.10	-0.02%	7/22/2022	1200
	Mid	CC414263	20.02	20.02	2.60%	19.60	0.09%	4/14/2024	700
	High	CC400362	30	N/A	N/A	30.00	0.00%	9/7/2024	1000

Response Time Data

Type	RM Analyzer s/n	Analyzer Span	RM Gas Span
CH4 ppmv Inlet A	1433763284	5000	1100
NMHC ppmv Inlet	1433763284	5000	1100
CH4 ppmv outlet	1160990215	500	115
NMHC ppmv Outlet	1160990215	500	37
	Start	95% Response	Time (min)
Upscale			1
Downscale			1

© Mostardi Platt

Client: East Balt Commissary, LLC
Facility: Chicago Illinois
Fuel Type: Natural Gas
Fuel Factor: 8710
Diluent: O2 %

Location: Catalytic Oxidizer (High Inlet Loading)
Date: 2/16/17
Operator: JFR
Project #: M170406
Fuel Factor: by Standard

CH4 ppmv Inlet A Correction Data

Run #	Cma	Precal	Postcal	Pre zero	Post zero	Co	Cm	C	Cgas	Span Bias	Span Drift	Zero Bias	Zero Drift
1	300.00	301.60	287.50	0.10	0.00	0.05	294.55	142.10	142.1	1.28	-1.28	0.01	-0.01
2	300.00	301.60	287.50	0.00	0.00	0.00	294.55	161.50	161.5	1.28	-1.28	0.01	0.00
3	300.00	301.60	287.50	0.00	0.00	0.00	294.55	161.50	161.5	1.28	-1.28	0.01	0.00

NMHC ppmv Inlet Correction Data

Run #	Cma	Precal	Postcal	Pre zero	Post zero	Co	Cm	C	Cgas	Span Bias	Span Drift	Zero Bias	Zero Drift
1	603.40	603.90	604.00	12.30	14.30	13.30	603.95	411.20	411.2	-0.01	0.01	-0.18	0.18
2	603.40	604.00	610.50	14.30	14.60	14.45	607.25	437.80	437.8	-0.60	0.59	-0.21	0.03
3	603.40	610.50	604.10	14.60	12.70	13.65	607.30	470.30	470.3	-0.02	-0.58	-0.04	-0.17

CH4 ppmv outlet Correction Data

Run #	Cma	Precal	Postcal	Pre zero	Post zero	Co	Cm	C	Cgas	Span Bias	Span Drift	Zero Bias	Zero Drift
1	93.36	93.60	93.50	0.00	0.00	0.00	93.55	150.10	150.1	0.00	-0.09	0.00	0.00
2	93.36	93.50	94.30	0.00	0.00	0.00	93.90	121.00	121.0	-0.61	0.70	0.00	0.00
3	93.36	94.30	93.50	0.00	0.00	0.00	93.90	146.30	146.3	0.09	-0.70	0.00	0.00

NMHC ppmv Outlet Correction Data

Run #	Cma	Precal	Postcal	Pre zero	Post zero	Co	Cm	C	Cgas	Span Bias	Span Drift	Zero Bias	Zero Drift
1	20.02	19.50	20.30	0.00	0.00	0.00	19.90	4.90	4.9	-2.16	2.16	0.00	0.00
2	20.02	20.30	20.10	0.00	0.00	0.00	20.20	3.70	3.7	-1.62	-0.54	0.00	0.00
3	20.02	20.10	20.20	0.00	0.00	0.00	20.15	4.40	4.4	-1.89	0.27	0.00	0.00

Cma = Concenkration of Cal Gas C = Average value of test Co=Average Pre and Post Zero
Cm=Average Pre and Post Span Cgas = Corrected gas value of test

Calibration Corrected Data

Run #	Run Date	Start Time	End Time	CH4 ppmv Inlet A	NMHC ppmv Inlet	CH4 ppmv outlet	NMHC ppmv Outlet
1	2/16/17	10:40	11:39	142.1	411.2	150.1	4.9
2	2/16/17	12:20	13:19	161.5	437.8	121.0	3.7
3	2/16/17	13:56	15:10	161.5	470.3	146.3	4.4

© Mostardi Platt

Facility: Chicago Illinois
Project #: M170406
Location: Catalytic Oxidizer (High Inlet Loading)
Date: 3/16/17

Linearity Cal/Pre 1 Cal

Time	CH4 ppmV Inlet A		NMHC ppmV Inlet		CH4 ppmV outlet		NMHC ppmV Outlet	
6:23	0.3		0.2		1.8		0.00	
6:24	0.2		3719.6		1.8		0.00	
6:25	0.2		4630.0		0.4		0.00	
6:26	0.2		4701.7		0.0		0.00	
6:27	0.2		4701.2		0.0		0.00	
6:28	0.2		4664.2		0.0		0.00	
6:29	0.2		4480.8		0.0		0.00	z
6:30	0.2		4480.8		0.0		8.80	
6:31	0.2		4480.8		0.0		14.50	
6:32	0.3		4321.9		0.0		23.80	
6:33	1.3		3801.0		0.0		29.00	
6:34	0.1	z	2994.4		0.0		35.00	
6:35	0.3		2994.3		0.0		41.00	
6:36	0.2		2983.0		0.0		45.40	
6:37	0.1		2961.7		0.0		48.10	
6:38	0.2		2960.5		0.0		49.80	
6:39	2.8		318.8		0.0		51.80	
6:40	0.8		1300.8		0.0		53.10	
6:41	0.2		1497.4		0.0		54.30	
6:42	0.2		1497.3		0.0		55.40	
6:43	0.2		1498.5		0.0		56.90	
6:44	2.1		400.6		0.0		58.00	
6:45	843.0		5.1		0.0		59.40	
6:46	818.2		2.0		0.0		60.20	
6:47	818.5		0.7		0.0		60.20	
6:48	821.5		0.2		0.0		60.20	
6:49	822.4		0.2		0.0		60.20	
6:50	908.8	h	0.2		0.0		76.10	
6:51	908.8		0.2		0.0		88.60	
6:52	908.3		0.2		1.4		173.60	
6:53	828.8		0.1		1.6		234.30	
6:54	37.1		29.6		1.6		208.2	
6:55	568.3		580		1.8		220.6	
6:56	568.3	m	580.3		1.8		158.8	
6:57	569.3		580		1.8		100.3	
6:58	568.3		580		0.8		43	
6:59	65.2		53.7		0		10.6	
7:00	265.3		0.7		0		2.9	
7:01	301.8	l	0.2		0		0	
7:02	302		0.2		0		0	
7:03	302		0.2		0		0	
7:04	302		0.2		0		0	
7:05	84.5		0.2		0		0	
7:06	2.3		598.8		0		0	
7:07	0.8		877.8	h	0		1.8	
7:08	0.1		877.8		0		8.2	
7:09	0.1		877.8		0		8.7	
7:10	0.1		877.6		0		11.1	
7:11	0.1		877.2		0		10.8	
7:12	1.4		465.4		0		10.8	
7:13	2.8		3.5		0		10.8	
7:14	2.8		2.6		0		11.2	
7:15	2.8		3.8		0		11.4	
7:16	2.8		3.5		0		16.4	
7:17	2.8		2.4		0		27.2	
7:18	2.8		1.1		0		27.2	
7:19	2.8		0.1		0		27.2	
7:20	2.8		0.2		0		27.2	
7:21	2.8		0.1		0		27.2	
7:22	2.7		0.2		0		27.2	
7:23	2.7		0.2		0		29.9	
7:24	2.7		0.1		0		38.8	
7:25	2.7		0.2		0		48.2	
7:26	7.8		2.8		0		53	
7:27	304.5		144.4		0		55.8	
7:28	281.8		330.3		0		58	
7:29	283.8		405.8		0		59.3	
7:30	282.6		376.6		0		60.2	
7:31	288.2		365.6		0		60.8	
7:32	302.2		367.1		0	z	53.4	
7:33:00	283.8		373.6		0		42.6	
7:34:00	128.8		137.8		0		42.6	
7:44:00	0.1		0.2		93.8	h	0	
7:45:00	0.1		0.3		93.7		0	
7:46:00	0		0.2		91.8		0	
7:47:00	0		0.3		35.1		65.6	
7:48:00	288.3		116.2		30.2	l	81.5	
7:49:00	315.7		180.2		30.8		18.4	
7:50:00	288.5		191		30.5		8.9	
7:51:00	318.4		200.9		55		7.4	
7:52:00	306.8		220.5		82.2		1.7	
7:53:00	288.4		240.7		81.7	m	0	
10:07:50	0.1		143.7		0		30	h
10:08:00	0.1		74.7		0		30	
10:09:00	0.1		47.5		0		29.9	
10:10:00	0.2		30		0.8		24.1	
10:11:00	0.1		27.4		0.8		19.5	m
10:12:00	0.1		23.7		0		18.3	
10:13:00	0.1		19.8		0		18.3	
10:14:00	0.1		18.4		0		18.2	
10:15:00	0.1		16		0		15	
10:16:00	0.1		14.8		0		8.7	
10:17:00	0.1		13.3		0		8.5	
10:18:00	2.2		10.1		0		8.5	
10:19:00	3.7		60		0		8.8	
10:20:00	3.1		33		0		9.8	
10:21:00	2.7		16.4		0		10.1	
10:22:00	1		16.8		0		10.1	h
10:23:00	0		18		0		10.1	
10:24:00	0.1		12.3	z	0		10.1	
10:25:00	0.6		286.3		0		4.8	
10:26:00	0.7		523.8		0		0	z
10:27:00	0.1		520.9		0		0	
10:28:00	0.1		520.2		0		0	
10:29:00	0.1		519.4		0		0	
10:30:00	0.1		581.4		82.3		1.8	
10:31:00	0.1		604		158.7		6.3	
10:32:00	0.1		603.9	m	167.6		8.2	
9:40:00	0		304.2	l	0		60.8	
9:41:00	0		301.6		0		60.8	

© Mostardi Platt

Client: East Bell Commissary, LLC
Facility: Chicago Illinois
Project #: M170406

Location: Catalytic Oxidizer (High Inlet Loading)
Date: 2/16/17

Post 1/Pre 2

Time	CH4 ppmv Inlet A		NMHC ppmv Inlet		CH4 ppmv outlet		NMHC ppmv Outlet	
11:51	0.2		787.2		0.00	z	0.00	z
11:52	0.2		747.8		20.40		2.30	
11:53	0.2		720.3		9.70		14.50	
11:54	0.1		700.1		0.00		20.20	
11:55	0.1		684.5		0.00		20.30	
11:56	0.1		674.1		0.00		20.30	m
11:57	0.1		668.1		0.00		20.40	
11:58	0.1		664.3		20.10		16.50	
11:59	0.1		662.9		64.10		6.80	
12:00	0.1		659.1		92.30		0.00	
12:01	0.1		638.8		93.50	m	0.00	
12:02	0.1		604.0	m	93.00		0.00	
12:03	0.0		604.0		102.80		1.20	
12:04	0.0		603.9		124.00		3.70	
12:10	0.0		15.3		129.80		4.10	
12:11	0.0		14.3	z	124.30		3.90	

Post 2/Pre 3

Time	CH4 ppmv Inlet A		NMHC ppmv Inlet		CH4 ppmv outlet		NMHC ppmv Outlet	
13:26	0.2		720.0		0.00	z	0.00	z
13:27	0.1		691.9		0.00		13.50	
13:28	0.1		670.6		0.00		21.40	
13:29	0.1		658.0		0.00		21.40	
13:30	0.1		649.8		0.00		21.40	
13:31	0.1		641.4		0.00		21.50	
13:32	0.1		635.9		0.00		21.60	
13:33	0.1		630.5		0.00		21.60	
13:34	0.1		627.9		0.00		20.10	
13:35	0.1		613.4		0.00		20.10	
13:36	0.0		610.5		0.00		20.10	m
13:37	0.1		610.5	m	0.60		19.40	
13:42	0.1		15.9		94.00		0.00	
13:43	0.0		14.6	z	94.30	m	0.00	

Post 3

Time	CH4 ppmv Inlet A		NMHC ppmv Inlet		CH4 ppmv outlet		NMHC ppmv Outlet	
15:23	0.0	z	679.4		0.00	z	20.20	m
15:24	0.0		665.6		0.00		20.30	
15:25	0.0		654.2		0.00		20.30	
15:26	0.0		648.8		29.10		13.90	
15:27	0.0		621.3		80.50		2.70	
15:28	0.0		610.5		94.30		0.00	
15:29	0.0		610.5		94.50		0.00	
15:30	0.0		604.1	m	93.50	m	0.00	z
15:48	0.0		14.0		0.00		21.00	
15:49	0.0		12.7	z	0.00		21.30	
15:53	287.5		37.1		0.00		7.80	
15:54	287.5	m	27.2		0.00		8.00	

© Mostardi Platt

Method 25A Calibration Summary

Project:	M170406	Date:	1/24/17
Client:	East Balt Commissary	Operator:	SDyra
Location:	Proof Box #1	Analyzer ID:	V16 20/2 3460308
		Analyzer Range:	0-1000 ppm propane

Cal Run	Cal Level	Test Location	Cylinder ID Serial Number	Cal Gas Type	Cal Time	Expected Cal Value	Actual Response	Difference (% of cal value)	Drift (% of span)	Cylinder Pressure
Pre 1	Zero					0			N/A	
	Low		CC318709			299.9			N/A	
	Mid		CC273334			599.6			N/A	
	High		SG9115220BAL			908.9			N/A	
Post 1/ Pre 2	Zero									
	Low									
	Mid									
	High									
Post 2/ Pre 3	Zero									
	Low									
	Mid									
	High									
Post 3	Zero									
	Low									
	Mid									
	High									
	Zero									
	Low									
	Mid									
	High									
	Zero									
	Low									
	Mid									
	High									

Client: East Belt Commissary, LLC
Facility: Chicago, Illinois
Project #: M170406

Location: Proof Box #1 Recycled Air Duct
Date: 1/24/17
Operator: SDyra

Type	Setting	Cylinder ID	Cylinder Value	Predicted Value	Predicted Value Difference, %	Analyzer Response	Difference, % of Cylinder	Expiration Date	Final Bottle Pressure, PSI
THC ppmv outlet	Zero	n/a	0	N/A	N/A	-0.20	0.02%	n/a	900
	Low	CC316789	299.9	299.44	-0.35%	300.50	-0.20%	7/6/2023	1050
	Mid	CC273334	599.6	588.87	-2.02%	611.00	-1.90%	5/23/2024	1400
	High	SG9115220BAL	908.9	N/A	N/A	907.90	0.11%	12/30/2023	1400

Response Time Data

Type	RM Analyzer s/n	Analyzer Span	RM Gas Span
THC ppmv outlet	3480308	1000	1100
	Start	95% Response	Time (min)
Upscale	7:54:07	7:54:52	0.75
Downscale	8:03:20	8:04:35	1.25

© Mostardi Platt

Client:	East Belt Commissary, LLC	**Location:**	Proof Box #1 Recycled Air Duct
Facility:	Chicago, Illinois	**Date:**	1/24/17
Fuel Type:	Natural Gas	**Operator:**	SDyra
Fuel Factor:	8710	**Project #:**	M170406
Diluent:	O2 %	**Fuel Factor: by**	Standard

THC ppmv outlet Correction Data

Run #	Cma	Precal	Postcal	Pre zero	Post zero	Co	Cm	C	Cgas	Span Bias	Span Drift	Zero Bias	Zero Drift
1	599.60	611.00	597.60	-0.20	0.20	0.00	604.30	236.60	236.6	1.22	-1.22	-0.04	0.04
2	599.60	597.60	595.10	0.20	0.60	0.40	596.35	302.30	302.3	1.45	-0.23	-0.07	0.04
3	599.60	595.10	597.40	0.60	0.40	0.50	596.25	526.80	526.8	1.24	0.21	-0.05	-0.02

Cma = Concentration of Cal Gas
Cm=Average Pre and Post Span
C = Average value of test
Cgas = Corrected gas value of test
Co=Average Pre and Post Zero

Calibration Corrected Data

Run #	Run Date	Start Time	End Time	THC ppmv outlet
1	1/24/17	8:29	9:28	236.6
2	1/24/17	10:39	11:38	302.3
3	1/24/17	12:17	13:16	526.8

© Mostardi Platt

Client: East Balt Commissary, LLC
Facility: Chicago, Illinois
Project #: M170406
Location: Proof Box #1 Recycled Air Duct
Date: 1/24/17

Linearity Cal/Pre 1 Cal

Time	THC ppmv outlet	
7:53	0.7	
7:54	-0.2	z
7:55	146.6	
7:56	498.9	
7:57	600.0	
7:58	465.3	
7:59	844.1	
8:00	907.9	h
8:01	611.0	m
8:02	293.4	
8:03	300.5	l
8:04	260.2	
8:05	18.5	
8:06	27.6	
8:07	59.6	

© Mostardi Platt

Client: East Balt Commissary, LLC
Facility: Chicago, Illinois
Project #: M170406

Location: Proof Box #1 Recycled Air Duct
Date: 1/24/17

Post 1/Pre 2

Time	THC ppmv outlet	
9:33	109.5	
9:34	1.8	
9:35	0.2	z
9:36	324.2	
9:37	604.8	
9:38	595.4	
9:39	597.6	m
9:40	595.4	
9:41	553.4	
9:42	61.4	
9:43	11.7	

Post 2/Pre 3

Time	THC ppmv outlet	
11:40	567.1	
11:41	138.2	
11:42	2.3	
11:43	0.6	z
11:44	156.5	
11:45	625.8	
11:46	594.8	
11:47	595.1	m
11:48	574.3	
11:49	599.5	

Post 3

Time	THC ppmv outlet	
13:20	325.8	
13:21	4.4	
13:22	1.2	
13:23	0.4	z
13:24	355.9	
13:25	597.4	m
13:26	593.3	
13:27	592.7	

© Mostardi Platt

Meter Box Calibration

Dry Gas Meter Calibration Data

Dry Gas Meter No.	CM6	Date:	January 12, 2017
Standard Meter No.	15788714	Calibrated By:	EWK
Standard Meter (Y)	0.9972	Barometric Pressure:	29.41

Run Number		Orifice Setting in H_2O Chg (H)	Standard Meter Gas Volume vr	Dry Gas Meter Gas Volume vd	Standard Meter Temp. F° tr	Dry Gas Meter Inlet Temp. F° tdi	Dry Gas Meter Outlet Temp. F° tdo	Dry Gas Meter Avg. Temp. F° td	Time Min	Time Sec	Y	Chg (H)
Final			34.171	19.194	63	65	62					
Initial			28.270	13.282	63	61	60					
Difference	1	0.20	5.901	5.912	63	63	61	62	20	55	0.993	1.434
Final			39.924	24.986	63	67	64					
Initial			34.349	19.370	63	64	63					
Difference	2	0.50	5.575	5.616	63	66	64	65	12	45	0.992	1.486
Final			48.650	33.795	64	69	66					
Initial			40.145	25.205	64	66	64					
Difference	3	0.70	8.505	8.590	64	68	65	66	16	55	0.990	1.574
Final			55.516	40.726	64	71	67					
Initial			48.765	33.904	64	68	66					
Difference	4	0.90	6.751	6.822	64	70	67	68	12	0	0.992	1.611
Final			66.845	52.059	62	65	64					
Initial			56.330	41.549	62	63	63					
Difference	5	1.20	10.515	10.510	62	64	64	64	16	56	0.998	1.764
Final			28.135	13.140	63	62	59					
Initial			18.978	4.060	63	58	57					
Difference	6	2.00	9.157	9.080	63	60	58	59	11	27	0.993	1.795
									Average		0.993	1.610

© Mostardi Platt

Stack Temperature Sensor Calibration

Meter Box # : CM6 *Name :* EWK

Ambient Temperature : 59 °F *Date :* January 12, 2017

Calibrator Model # : CL23A

Serial # : T-249465

Date Of Certification : January 8, 2016

Primary Standards Directly Traceable National Institute of Standards and Technology (NIST)

Reference Source Temperature (° F)	Test Thermometer Temperature (° F)	Temperature Difference %
0	0	0.0
250	250	0.0
600	600	0.0
1200	1200	0.0

$$\frac{(\text{Ref. Temp., °F} + 460) - (\text{Test Therm. Temp., °F} + 460)}{\text{Ref. Temp., °F} + 460} \cdot 100 <= 1.5\ \%$$

© Mostardi Platt

Meter Box Calibration

Dry Gas Meter Calibration Data

Dry Gas Meter No.	CM6	Date:	February 2, 2017
Standard Meter No.	4319699	Calibrated By:	JAK1
Standard Meter (Y)	1.0023	Barometric Pressure:	29.74

Run Number		Orifice Setting in H_2O Chg (H)	Standard Meter Gas Volume vr	Dry Gas Meter Gas Volume vd	Standard Meter Temp. F° tr	Dry Gas Meter Inlet Temp. F° tdi	Dry Gas Meter Outlet Temp. F° tdo	Dry Gas Meter Avg. Temp. F° td	Time Min	Time Sec	Y	Chg (H)
Final			91.407	101.240	63	68	64					
Initial			85.685	95.418	63	64	61					
Difference	1	0.20	5.722	5.822	63	66	63	64	21	58	0.987	1.640
Final			97.046	6.924	64	71	65					
Initial			91.711	1.552	64	68	65					
Difference	2	0.50	5.335	5.372	64	70	65	67	12	45	1.000	1.586
Final			102.434	12.357	65	71	69					
Initial			97.326	7.210	63	70	66					
Difference	3	0.70	5.108	5.147	64	71	68	69	10	22	1.002	1.596
Final			8.213	18.179	63	73	69					
Initial			2.795	12.706	65	71	69					
Difference	4	0.90	5.418	5.473	64	72	69	71	9	52	1.002	1.647
Final			6.284	63.016	64	69	66					
Initial			1.019	57.665	63	67	66					
Difference	5	1.20	5.265	5.351	64	68	66	67	8	36	0.990	1.775
Final			85.366	95.086	63	65	61					
Initial			78.820	88.635	63	61	60					
Difference	6	2.00	6.546	6.451	63	63	61	62	8	18	1.010	1.797
									Average		0.999	1.673

© Mostardi Platt

Stack Temperature Sensor Calibration

Meter Box # : CM6 *Name :* JAK1

Ambient Temperature : 60 °F *Date :* February 2, 2017

Calibrator Model # : CL23A

Serial # : T-249465

Date Of Certification : January 8, 2016

Primary Standards Directly Traceable National Institute of Standards and Technology (NIST)

Reference Source Temperature (° F)	Test Thermometer Temperature (° F)	Temperature Difference %
0	0	0.0
250	249	0.1
600	599	0.1
1200	1199	0.1

$$\frac{(\text{Ref. Temp., °F} + 460) - (\text{Test Therm. Temp., °F} + 460)}{\text{Ref. Temp., °F} + 460} * 100 <= 1.5\ \%$$

© Mostardi Platt

Meter Box Calibration

Dry Gas Meter Calibration Data

Dry Gas Meter No.	CM10	Date:	January 5, 2017
Standard Meter No.	4319699	Calibrated By:	EWK
Standard Meter (Y)	1.0023	Barometric Pressure:	29.41

Run Number	Orifice Setting in H_2O Chg (H)	Standard Meter Gas Volume vr	Dry Gas Meter Gas Volume vd	Standard Meter Temp. F° tr	Dry Gas Meter Inlet Temp. F° tdi	Dry Gas Meter Outlet Temp. F° tdo	Dry Gas Meter Avg. Temp. F° td	Time Min	Time Sec	Y	Chg (H)
Final		28.424	9.056	63	67	65					
Initial		22.940	3.635	63	62	61					
Difference 1	0.20	5.484	5.421	63	65	63	64	19	35	1.015	1.436
Final		33.950	14.543	64	69	66					
Initial		28.710	9.342	64	66	64					
Difference 2	0.50	5.240	5.201	64	68	65	66	12	3	1.013	1.487
Final		39.358	19.913	65	71	67					
Initial		34.074	14.666	65	68	66					
Difference 3	0.70	5.284	5.247	65	70	67	68	10	17	1.013	1.492
Final		45.842	26.343	65	72	69					
Initial		40.317	20.863	65	70	68					
Difference 4	0.90	5.525	5.480	65	71	69	70	9	34	1.017	1.514
Final		51.635	32.096	65	72	69					
Initial		45.960	26.464	65	70	69					
Difference 5	1.20	5.675	5.632	65	71	69	70	8	41	1.017	1.575
Final		22.877	103.569	62	62	60					
Initial		17.733	98.538	63	59	59					
Difference 6	2.00	5.144	5.031	63	61	60	60	6	20	1.015	1.716
								Average		1.015	1.537

© Mostardi Platt

Stack Temperature Sensor Calibration

Meter Box # : CM10 *Name :* EWK

Ambient Temperature : 56 °F *Date :* January 5, 2017

Calibrator Model # : CL23A

Serial # : T-249465

Date Of Certification : January 8, 2016

Primary Standards Directly Traceable National Institute of Standards and Technology (NIST)

Reference Source Temperature (° F)	Test Thermometer Temperature (° F)	Temperature Difference %
0	0	0.0
250	250	0.0
600	600	0.0
1200	1202	0.1

$$\frac{(\text{Ref. Temp., °F} + 460) - (\text{Test Therm. Temp., °F} + 460)}{\text{Ref. Temp., °F} + 460} * 100 <= 1.5\ \%$$

© Mostardi Platt

Meter Box Calibration

Dry Gas Meter Calibration Data

Dry Gas Meter No.	*CM10*	*Date:*	*February 3, 2017*
Standard Meter No.	*15788714*	*Calibrated By:*	*JAK1*
Standard Meter (Y)	*0.9972*	*Barometric Pressure:*	*29.80*

Run Number		Orifice Setting in H_2O Chg (H)	Standard Meter Gas Volume vr	Dry Gas Meter Gas Volume vd	Standard Meter Temp. F° tr	Dry Gas Meter Inlet Temp. F° tdi	Dry Gas Meter Outlet Temp. F° tdo	Dry Gas Meter Avg. Temp. F° td	Time Min	Time Sec	Y	Chg (H)
Final			27.359	40.026	59	63	61					
Initial			22.140	34.805	60	61	59					
Difference	1	0.20	5.219	5.221	60	62	60	61	19	18	0.999	1.523
Final			32.551	45.243	59	65	62					
Initial			27.516	40.193	60	63	61					
Difference	2	0.50	5.035	5.050	60	64	62	63	12	9	0.999	1.616
Final			38.015	50.725	59	66	63					
Initial			32.761	45.453	59	64	62					
Difference	3	0.70	5.254	5.272	59	65	63	64	10	51	1.001	1.650
Final			46.061	58.839	59	65	64					
Initial			38.668	51.389	59	65	63					
Difference	4	0.90	7.393	7.450	59	65	64	64	13	32	0.997	1.666
Final			51.636	64.445	59	65	64					
Initial			46.400	59.179	59	65	63					
Difference	5	1.20	5.236	5.266	59	65	64	64	8	23	0.999	1.699
Final			21.984	34.639	59	62	59					
Initial			16.583	29.274	59	59	58					
Difference	6	2.00	5.401	5.365	59	61	59	60	6	45	1.000	1.741
									Average		0.999	1.649

© Mostardi Platt

Stack Temperature Sensor Calibration

Meter Box # : CM10 *Name :* JAK1

Ambient Temperature : 59 °F *Date :* February 3, 2017

Calibrator Model # : CL23A

Serial # : T-249465

Date Of Certification : January 8, 2016

Primary Standards Directly Traceable National Institute of Standards and Technology (NIST)

Reference Source Temperature (° F)	Test Thermometer Temperature (° F)	Temperature Difference %
0	0	0.0
250	250	0.0
600	597	0.3
1200	1198	0.1

$$\frac{(\text{Ref. Temp., °F} + 460) - (\text{Test Therm. Temp., °F} + 460)}{\text{Ref. Temp., °F} + 460} * 100 <= 1.5\ \%$$

© Mostardi Platt

Meter Box Calibration

Dry Gas Meter Calibration Data

Dry Gas Meter No.	*CM19*	*Date:*	*February 13, 2017*
Standard Meter No.	*15788714*	*Calibrated By:*	*JJR*
Standard Meter (Y)	*0.9972*	*Barometric Pressure:*	*29.71*

Run Number		Orifice Setting in H_2O Chg (H)	Standard Meter Gas Volume vr	Dry Gas Meter Gas Volume vd	Standard Meter Temp. F° tr	Dry Gas Meter Inlet Temp. F° tdi	Dry Gas Meter Outlet Temp. F° tdo	Dry Gas Meter Avg. Temp. F° td	Time Min	Time Sec	Y	Chg (H)
Final			89.766	58.454	59	61	59					
Initial			83.170	51.748	59	56	60					
Difference	1	0.20	6.596	6.706	59	59	60	59	24	2	0.980	1.486
Final			95.908	64.715	62	66	61					
Initial			89.905	58.598	60	62	61					
Difference	2	0.50	6.003	6.117	61	64	61	63	14	37	0.980	1.660
Final			104.628	73.624	61	60	64					
Initial			96.057	64.865	60	66	65					
Difference	3	0.70	8.571	8.759	61	63	65	64	17	23	0.980	1.606
Final			12.018	81.244	66	68	85					
Initial			4.758	73.754	63	68	71					
Difference	4	0.90	7.260	7.490	65	68	78	73	13	4	0.980	1.622
Final			17.798	87.213	61	80	67					
Initial			12.149	81.374	61	69	68					
Difference	5	1.20	5.649	5.839	61	75	68	71	9	14	0.980	1.767
Final			83.011	51.587	58	56	60					
Initial			76.742	45.237	58	60	60					
Difference	6	2.00	6.269	6.350	58	58	60	59	7	30	0.982	1.596
									Average		0.980	1.623

© Mostardi Platt

Stack Temperature Sensor Calibration

Meter Box # : CM19 *Name :* JJR

Ambient Temperature : 62 °F *Date :* February 13, 2017

Calibrator Model # : CL23A

Serial # : T-249465

Date Of Certification : January 8, 2016

Primary Standards Directly Traceable National Institute of Standards and Technology (NIST)

Reference Source Temperature (° F)	Test Thermometer Temperature (° F)	Temperature Difference %
0	0	0.0
250	251	0.1
600	599	0.1
1200	1203	0.2

$$\frac{(\text{Ref. Temp., °F} + 460) - (\text{Test Therm. Temp., °F} + 460)}{\text{Ref. Temp., °F} + 460} * 100 <= 1.5\ \%$$

© Mostardi Platt

Meter Box Calibration

Dry Gas Meter Calibration Data

Dry Gas Meter No.	CM19	Date:	February 24, 2017
Standard Meter No.	15788714	Calibrated By:	jdv
Standard Meter (Y)	0.9972	Barometric Pressure:	28.85

Run Number		Orifice Setting in H_2O Chg (H)	Standard Meter Gas Volume vr	Dry Gas Meter Gas Volume vd	Standard Meter Temp. F° tr	Dry Gas Meter Inlet Temp. F° tdi	Dry Gas Meter Outlet Temp. F° tdo	Dry Gas Meter Avg. Temp. F° td	Time Min	Time Sec	Y	Chg (H)
Final			25.743	68.821	59	63	61					
Initial			20.266	63.244	59	62	58					
Difference	1	0.20	5.477	5.577	59	63	60	61	19	44	0.983	1.490
Final			33.762	77.004	59	69	64					
Initial			25.952	69.031	59	64	61					
Difference	2	0.50	7.810	7.973	59	67	63	65	18	41	0.986	1.632
Final			40.348	83.746	59	72	65					
Initial			34.179	77.442	60	69	64					
Difference	3	0.70	6.169	6.304	60	71	65	68	12	31	0.989	1.637
Final			48.063	91.674	59	74	67					
Initial			40.849	84.264	60	71	65					
Difference	4	0.90	7.214	7.410	60	73	66	69	12	56	0.987	1.638
Final			57.860	101.740	59	75	68					
Initial			48.315	91.940	60	73	67					
Difference	5	1.20	9.545	9.800	60	74	68	71	15	5	0.989	1.692
Final			20.065	63.033	58	61	59					
Initial			8.998	51.841	59	56	56					
Difference	6	2.00	11.067	11.192	59	59	58	58	13	29	0.980	1.711
									Average		0.986	1.633

© Mostardi Platt

Stack Temperature Sensor Calibration

Meter Box # : CM19 *Name :* jdv

Ambient Temperature : 60 °F *Date :* February 24, 2017

Calibrator Model # : CL23A

Serial # : T-249465

Date Of Certification : January 8, 2016

Primary Standards Directly Traceable National Institute of Standards and Technology (NIST)

Reference Source Temperature (° F)	Test Thermometer Temperature (° F)	Temperature Difference %
0	0	0.0
250	251	0.1
600	599	0.1
1200	1203	0.2

$$\frac{(\text{Ref. Temp., °F} + 460) - (\text{Test Therm. Temp., °F} + 460)}{\text{Ref. Temp., °F} + 460} * 100 <= 1.5\ \%$$

© Mostardi Platt

Meter Box Calibration

Dry Gas Meter Calibration Data

Dry Gas Meter No.	*CM23*	*Date:*	*February 13, 2017*
Standard Meter No.	*4319699*	*Calibrated By:*	*JJR*
Standard Meter (Y)	*1.0023*	*Barometric Pressure:*	*29.71*

Run Number		Orifice Setting in H_2O Chg (H)	Standard Meter Gas Volume vr	Dry Gas Meter Gas Volume vd	Standard Meter Temp. F° tr	Dry Gas Meter Inlet Temp. F° tdi	Dry Gas Meter Outlet Temp. F° tdo	Dry Gas Meter Avg. Temp. F° td	Time Min	Time Sec	Y	Chg (H)
Final			76.815	36.701	64	63	62					
Initial			71.521	31.432	63	60	60					
Difference	1	0.20	5.294	5.269	64	62	61	61	21	10	1.000	1.792
Final			82.519	42.370	65	67	64					
Initial			76.934	36.816	64	63	62					
Difference	2	0.50	5.585	5.554	65	65	63	64	14	9	1.003	1.797
Final			89.057	48.872	65	66	66					
Initial			82.725	42.573	67	66	64					
Difference	3	0.70	6.332	6.299	66	66	65	66	13	16	1.003	1.725
Final			96.070	55.864	65	68	68					
Initial			89.220	49.034	65	69	69					
Difference	4	0.90	6.850	6.830	65	69	69	69	12	30	1.007	1.667
Final			102.794	62.539	65	70	68					
Initial			96.261	56.040	65	69	67					
Difference	5	1.20	6.533	6.499	65	70	68	69	10	40	1.009	1.779
Final			71.481	31.329	63	63	63					
Initial			65.684	25.694	68	60	68					
Difference	6	2.00	5.797	5.635	66	62	66	64	7	10	1.020	1.719
									Average		1.007	1.747

© Mostardi Platt

Stack Temperature Sensor Calibration

Meter Box # : CM23 *Name :* JJR

Ambient Temperature : 62 °F *Date :* February 13, 2017

Calibrator Model # : CL23A

Serial # : T-249465

Date Of Certification : January 8, 2016

Primary Standards Directly Traceable National Institute of Standards and Technology (NIST)

Reference Source Temperature (° F)	Test Thermometer Temperature (° F)	Temperature Difference %
0	0	0.0
250	252	0.3
600	598	0.2
1200	1201	0.1

$$\frac{(\text{Ref. Temp., °F} + 460) - (\text{Test Therm. Temp., °F} + 460)}{\text{Ref. Temp., °F} + 460} * 100 <= 1.5\ \%$$

© Mostardi Platt

Meter Box Calibration

Dry Gas Meter Calibration Data

Dry Gas Meter No.	*CM23*	*Date:*	*February 27, 2017*
Standard Meter No.	*4319699*	*Calibrated By:*	*MLIP*
Standard Meter (Y)	*1.0023*	*Barometric Pressure:*	*29.50*

Run Number		Orifice Setting in H_2O Chg (H)	Standard Meter Gas Volume vr	Dry Gas Meter Gas Volume vd	Standard Meter Temp. F° tr	Dry Gas Meter Inlet Temp. F° tdi	Dry Gas Meter Outlet Temp. F° tdo	Dry Gas Meter Avg. Temp. F° td	Time Min	Time Sec	Y	Chg (H)
Final			21.913	71.442	65	67	66					
Initial			16.710	66.165	65	67	65					
Difference	1	0.20	5.203	5.277	65	67	66	66	20	35	0.988	1.761
Final			28.466	78.081	66	67	66					
Initial			21.913	71.442	65	67	66					
Difference	2	0.50	6.553	6.639	66	67	66	67	16	24	0.988	1.764
Final			34.442	84.126	66	67	66					
Initial			28.466	78.081	66	67	66					
Difference	3	0.70	5.976	6.045	66	67	66	67	12	40	0.988	1.775
Final			40.181	89.900	66	67	66					
Initial			34.442	84.126	66	67	66					
Difference	4	0.90	5.739	5.774	66	67	66	67	10	38	0.993	1.744
Final			46.238	96.015	66	67	66					
Initial			40.181	89.900	66	67	66					
Difference	5	1.20	6.057	6.115	66	67	66	67	9	45	0.988	1.755
Final			16.700	66.165	65	63	63					
Initial			9.490	58.930	65	63	63					
Difference	6	2.00	7.210	7.235	65	63	63	63	9	0	0.988	1.764
									Average		0.989	1.760

© Mostardi Platt

Stack Temperature Sensor Calibration

Meter Box # : CM23 *Name :* MLIP

Ambient Temperature : 60 °F *Date :* February 27, 2017

Calibrator Model # : CL23A

Serial # : T-249465

Date Of Certification : January 10, 2017

Primary Standards Directly Traceable National Institute of Standards and Technology (NIST)

Reference Source Temperature (° F)	Test Thermometer Temperature (° F)	Temperature Difference %
0	1	0.2
250	250	0.0
600	602	0.2
1200	1205	0.3

$$\frac{(\text{Ref. Temp., °F} + 460) - (\text{Test Therm. Temp., °F} + 460)}{\text{Ref. Temp., °F} + 460} * 100 <= 1.5\ \%$$

© Mostardi Platt

S TYPE PITOT TUBE INSPECTION WORKSHEET

Pitot Tube No: 80 Date: 12/5/16 Inspectors Name: NCC

Type of Probe: (circle one) **M2** M5 M17 Probe Length: 5 ft.

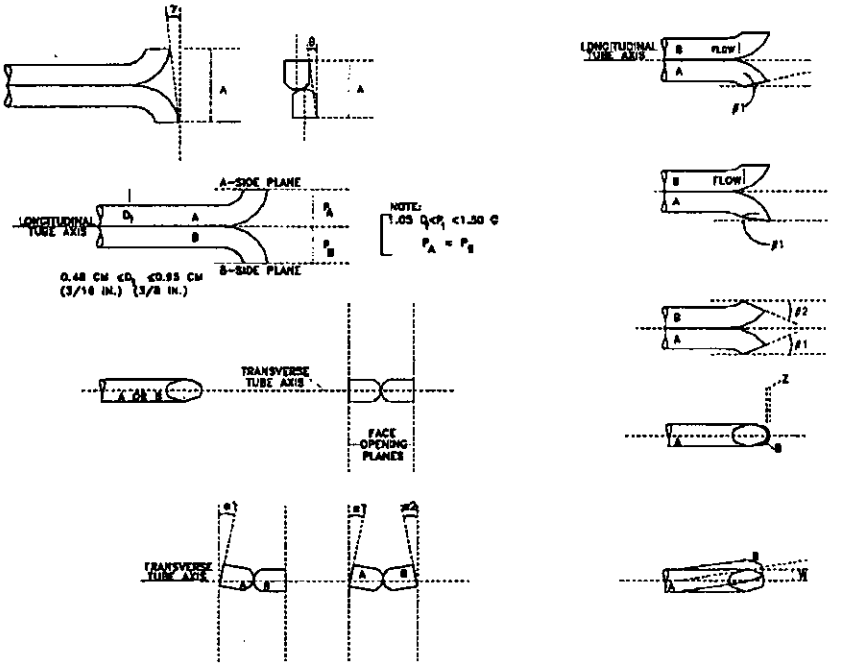

Pitot tube assembly level? X yes ____ no

Pitot tube openings damaged? ____ yes (explain below) X no

a_1 = 1 ° (<10°), a_2 = 1.5 ° (<10°) z = A sin g = 0.017 (in.); (<0.125 in.)

b_1 = 1.5 ° (<5°), b_2 = 0.5 ° (<5°) w = A sin q = 0.017 (in.); (<0.03125 in.)

γ = 1 °, θ = 1 °, A = 0.869 (in.) P_A = 0.468 (in.), P_B = 0.468 (in.), D_t = 0.375 (in.)

Calibration required? ____ yes X no

© Mostardi Platt

S TYPE PITOT TUBE INSPECTION WORKSHEET

Pitot Tube No: 14 Date: 8/29/2016 Inspectors Name: JHOWE

Type of Probe: (circle one) M2 M5 M17 Probe Length: 4 ft.

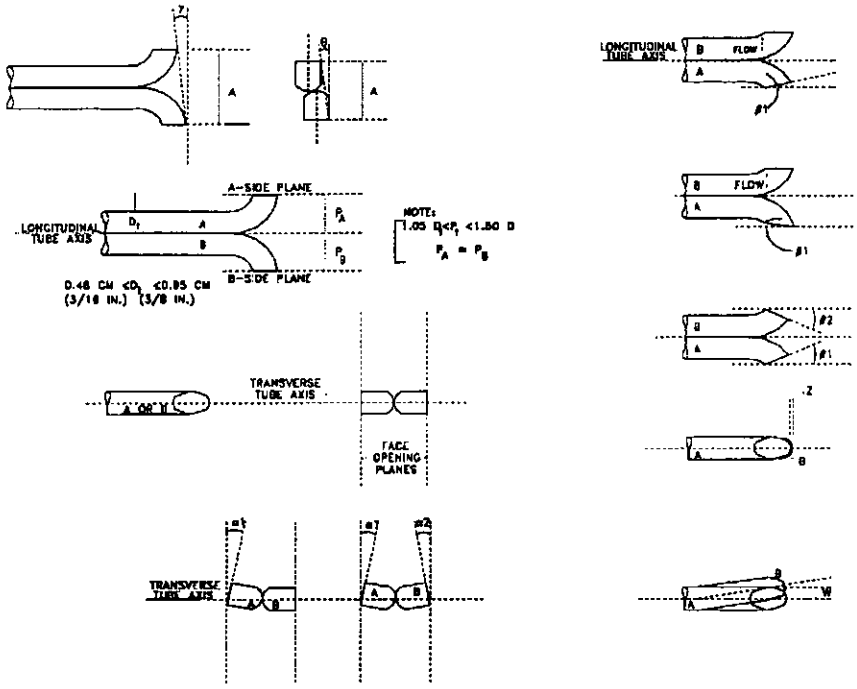

Pitot tube assembly level? X yes ____ no

Pitot tube openings damaged? ____ yes (explain below) X no

a_1 = 2 ° (<10°), a_2 = 0 ° (<10°) z = A sin g = 0.008 (in.); (<0.125 in.)

b_1 = 1 ° (<5°), b_2 = 1 ° (<5°) w = A sin q = 0.016 (in.); (<0.03125 in.)

γ = 0.5 °, θ = 1 °, A = 0.928 (in.) P_A = 0.471 (in.), P_B = 0.471 (in.), D_t = 0.375 (in.)

Calibration required? ____ yes X no

1

S TYPE PITOT TUBE INSPECTION WORKSHEET

Pitot Tube No: 14 Date: 2/24/2017 Inspectors Name: JHOWE

Type of Probe: (circle one) M2 M5 M17 Probe Length: 4 ft.

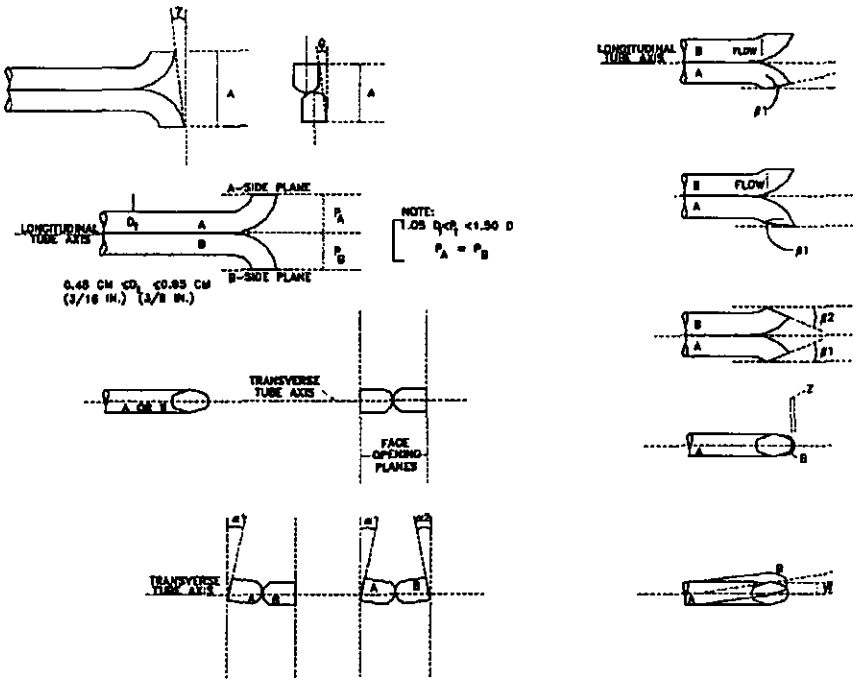

Pitot tube assembly level? X yes ____ no

Pitot tube openings damaged? ____ yes (explain below) X no

a_1 = 3 ° (<10°), a_2 = 1 ° (<10°) z = A sin g = 0.063 (in.); (<0.125 in.)

b_1 = 2.5 ° (<5°), b_2 = 1.5 ° (<5°) w = A sin q = 0.031 (in.); (<0.03125 in.)

γ = 4 °, θ = 2 °, A = 0.901 (in.) P_A = 0.471 (in.), P_B = 0.471 (in.), D_t = 0.375 (in.)

Calibration required? ____ yes X no

 © Mostardi Platt

Appendix H - Calibration Gas Cylinder Data

© Mostardi Platt

Airgas
an Air Liquide company

Airgas USA, LLC
9810 BAY AREA BLVD
Pasadena, TX 77507
Airgas.com

CERTIFICATE OF ANALYSIS

Grade of Product: CERTIFIED STANDARD-SPEC

Customer:	MOSTARDI PLATT		
Part Number:	X02AI99C15A01Z8	Reference Number:	163-400829835-1
Cylinder Number:	CC506464	Cylinder Volume:	146.2 Cubic Feet
Laboratory:	124 - Pasadena (SG06) - TX	Cylinder Pressure:	2000 PSIG
Analysis Date:	Jan 06, 2017	Valve Outlet:	590SS
Lot Number:	163-400829835-1		

Expiration Date: Jan 06, 2020

Product composition verified by direct comparison to calibration standards traceable to N.I.S.T. weights and/or N.I.S.T. Gas Mixture reference materials.

ANALYTICAL RESULTS

Component	Req Conc	Actual Concentration (Mole %)	Analytical Uncertainty
ETHANOL	27.00 PPM	27.20 PPM	+/- 5%
AIR	Balance		

Permanent Notes: NA

Approved for Release

© Mostardi Platt

Airgas.

Airgas USA, LLC
616 Miller Cut Off Road
Laporte, TX 77571
281-842-6900
Airgas.com

CERTIFICATE OF ANALYSIS

Grade of Product: CERTIFIED STANDARD-SPEC

Customer: GOLDEN SPECIALTY CONSULTING - CEDAR RAPIDS , IA
Part Number: X02AI99C15AC0J4
Cylinder Number: CC489594
Laboratory: ASG - LaPorte Mix (SAP) - TX
Analysis Date: Aug 25, 2016
Lot Number: 126-400762056-1

Reference Number: 126-400762056-1
Cylinder Volume: 146.2 Cubic Feet
Cylinder Pressure: 2015 PSIG
Valve Outlet: 590SS

Expiration Date: Aug 25, 2017

Product composition verified by direct comparison to calibration standards traceable to N.I.S.T. weights and/or N.I.S.T. Gas Mixture reference materials.

ANALYTICAL RESULTS

Component	Req Conc	Actual Concentration (Mole %)	Analytical Uncertainty
ETHANOL	42.50 PPM	45.00 PPM	+/- 5%
AIR	Balance		

Notes:
GOLDEN SPECIALTY CONSULTING
PO#: *REQUIRED*
ANALYTICAL TOLERANCE : +/- 5%

Approved for Release

© Mostardi Platt

Airgas
an Air Liquide company

Airgas Specialty Gases
Airgas USA, LLC
9810 BAY AREA BLVD
Pasadena, TX 77507
Airgas.com

CERTIFICATE OF ANALYSIS

Grade of Product: CERTIFIED STANDARD-SPEC

Customer:	MOSTARDI PLATT		
Part Number:	X02AI99C15A0200	Reference Number:	163-400829836-1
Cylinder Number:	CC506457	Cylinder Volume:	146.2 Cubic Feet
Laboratory:	124 - Pasadena (SG06) - TX	Cylinder Pressure:	2015 PSIG
Analysis Date:	Jan 06, 2017	Valve Outlet:	590SS
Lot Number:	163-400829836-1		

Expiration Date: Jan 06, 2020

Product composition verified by direct comparison to calibration standards traceable to N.I.S.T. weights and/or N.I.S.T. Gas Mixture reference materials.

ANALYTICAL RESULTS

Component	Req Conc	Actual Concentration (Mole %)	Analytical Uncertainty
ETHANOL	52.00 PPM	51.00 PPM	+/- 2%
AIR	Balance		

Permanent Notes: -NA-

Approved for Release

© Mostardi Platt

Airgas
an Air Liquide company

Airgas USA, LLC
9810 BAY AREA BLVD
Pasadena, TX 77507
Airgas.com

CERTIFICATE OF ANALYSIS

Grade of Product: CERTIFIED STANDARD-SPEC

Customer:	MOSTARDI PLATT		
Part Number:	X02AI99C15A3595	Reference Number:	163-400829837-1
Cylinder Number:	ALM014429	Cylinder Volume:	146.2 Cubic Feet
Laboratory:	124 - Pasadena (SG06) - TX	Cylinder Pressure:	1800 PSIG
Analysis Date:	Jan 10, 2017	Valve Outlet:	590SS
Lot Number:	163-400829837-1		

Expiration Date: Jan 10, 2020

Product composition verified by direct comparison to calibration standards traceable to N.I.S.T. weights and/or N.I.S.T. Gas Mixture reference materials.

ANALYTICAL RESULTS

Component	Req Conc	Actual Concentration (Mole %)	Analytical Uncertainty
ETHANOL	85.00 PPM	80.00 PPM	+/- 2%
AIR	Balance		

Approved for Release

© Mostardi Platt

Airgas
an Air Liquide company

Airgas Specialty Gases
Airgas USA, LLC
9810 BAY AREA BLVD
Pasadena, TX 77507
Airgas.com

CERTIFICATE OF ANALYSIS

Grade of Product: CERTIFIED STANDARD-SPEC

Customer:	MOSTARDI PLATT		
Part Number:	X02AI99C15A01Z9	Reference Number:	163-400829838-1
Cylinder Number:	CC503381	Cylinder Volume:	146.3 CF
Laboratory:	124 - Pasadena (SG06) - TX	Cylinder Pressure:	2015 PSIG
Analysis Date:	Jan 16, 2017	Valve Outlet:	590SS
Lot Number:	163-400829838-1		

Expiration Date: Jan 16, 2020

Product composition verified by direct comparison to calibration standards traceable to N.I.S.T. weights and/or N.I.S.T. Gas Mixture reference materials.

ANALYTICAL RESULTS

Component	Req Conc	Actual Concentration (Mole %)	Analytical Uncertainty
ETHANOL	275.0 PPM	274.0 PPM	+/- 2%
AIR	Balance		

Permanent Notes:-NA-

Signature on file

Approved for Release

© Mostardi Platt

Airgas
an Air Liquide company

Airgas Specialty Gases
Airgas USA, LLC
9810 BAY AREA BLVD
Pasadena, TX 77507
Airgas.com

CERTIFICATE OF ANALYSIS

Grade of Product: CERTIFIED STANDARD-SPEC

Customer:	MOSRDI PLATT		
Part Number:	X02AI99C15A1FJ2	Reference Number:	163-400829839-1
Cylinder Number:	ALM012361	Cylinder Volume:	85.9 CF
Laboratory:	124 - Pasadena (SG06) - TX	Cylinder Pressure:	1168 PSIG
Analysis Date:	Jan 05, 2017	Valve Outlet:	590
Lot Number:	163-400829839-1		

Expiration Date: Jan 05, 2021

Product composition verified by direct comparison to calibration standards traceable to N.I.S.T. weights and/or N.I.S.T. Gas Mixture reference materials.

ANALYTICAL RESULTS

Component	Req Conc	Actual Concentration (Mole %)	Analytical Uncertainty
ETHANOL	525.0 PPM	525.2 PPM	+/- 2%
AIR	Balance		

Approved for Release

© Mostardi Platt

Airgas
an Air Liquide company

Airgas Specialty Gases
Airgas USA, LLC
9810 BAY AREA BLVD
Pasadena, TX 77507
Airgas.com

CERTIFICATE OF ANALYSIS

Grade of Product: CERTIFIED STANDARD-SPEC

Customer:	MOSTARDI PLATT		
Part Number:	X02AI99C15A0201	Reference Number:	163-400830040-1
Cylinder Number:	CC507417	Cylinder Volume:	53.0 Cubic Feet
Laboratory:	124 - Pasadena (SG06) - TX	Cylinder Pressure:	900 PSIG
Analysis Date:	Jan 18, 2017	Valve Outlet:	590SS
Lot Number:	163-400830040-1		

Expiration Date: Jan 18, 2020

Product composition verified by direct comparison to calibration standards traceable to N.I.S.T. weights and/or N.I.S.T. Gas Mixture reference materials.

ANALYTICAL RESULTS

Component	Req Conc	Actual Concentration (Mole %)	Analytical Uncertainty
ETHANOL	850.0 PPM	868.0 PPM	+/- 2%
AIR	Balance		

Permanent Notes:-NA-

Signature on file
Approved for Release

© Mostardi Platt

Airgas.

Airgas Specialty Gases
12722 South Wentworth Avenue
Chicago, IL 60628
(773) 785-3000 Fax: (773) 785-1926
www.airgas.com

CERTIFICATE OF ANALYSIS

Grade of Product: EPA Protocol

Part Number:	E02AI99E15A1734	Reference Number:	54-124444507-1
Cylinder Number:	CC452299	Cylinder Volume:	146.2 CF
Laboratory:	ASG - Chicago - IL	Cylinder Pressure:	2015 PSIG
PGVP Number:	B12014	Valve Outlet:	590
Gas Code:	PPN,BALA	Certification Date:	Jul 22, 2014

Expiration Date: Jul 22, 2022

Certification performed in accordance with "EPA Traceability Protocol for Assay and Certification of Gaseous Calibration Standards (May 2012)" document EPA 600/R-12/531, using the assay procedures listed. *Analytical Methodology does not require correction for analytical interference. This cylinder has a total analytical* uncertainty as stated below with a confidence level of 95%. There are no significant impurities which affect the use of this calibration mixture. All concentrations are on a volume/volume basis unless otherwise noted.

Do Not Use This Cylinder below 100 psig, i.e. 0.7 megapascals.

ANALYTICAL RESULTS

Component	Requested Concentration	Actual Concentration	Protocol Method	Total Relative Uncertainty	Assay Dates
PROPANE	10.00 PPM	10.05 PPM	G1	+/- 0.7% NIST Traceable	07/22/2014
AIR	Balance				

CALIBRATION STANDARDS

Type	Lot ID	Cylinder No	Concentration	Uncertainty	Expiration Date
NTRM	10061408	CC314698	9.93 PPM PROPANE/AIR	+/- 0.6%	Jul 20, 2016

ANALYTICAL EQUIPMENT

Instrument/Make/Model	Analytical Principle	Last Multipoint Calibration
Nicolet 6700 AHR0801332	FTIR	Jun 27, 2014

Triad Data Available Upon Request

Approved for Release

© Mostardi Platt

Airgas
an Air Liquide company

CERTIFICATE OF ANALYSIS

Grade of Product: EPA Protocol

Part Number:	E02AI99E15A01H9	Reference Number:	54-124548896-1
Cylinder Number:	CC414203	Cylinder Volume:	146.2 CF
Laboratory:	ASG - Chicago - IL	Cylinder Pressure:	2015 PSIG
PGVP Number:	B12016	Valve Outlet:	590
Gas Code:	PPN,BALA	Certification Date:	Apr 14, 2016

Expiration Date: Apr 14, 2024

Certification performed in accordance with "EPA Traceability Protocol for Assay and Certification of Gaseous Calibration Standards (May 2012)" document EPA 600/R-12/531, using the assay procedures listed. Analytical Methodology does not require correction for analytical interference. This cylinder has a total analytical uncertainty as stated below with a confidence level of 95%. There are no significant impurities which affect the use of this calibration mixture. All concentrations are on a volume/volume basis unless otherwise noted.

Do Not Use This Cylinder below 100 psig, i.e. 0.7 megapascals.

ANALYTICAL RESULTS

Component	Requested Concentration	Actual Concentration	Protocol Method	Total Relative Uncertainty	Assay Dates
PROPANE	20.00 PPM	20.02 PPM	G1	+/- 0.8% NIST Traceable	04/14/2016
AIR	Balance				

CALIBRATION STANDARDS

Type	Lot ID	Cylinder No	Concentration	Uncertainty	Expiration Date
NTRM	13060520	CC417457	50.80 PPM PROPANE/NITROGEN	+/- 0.6%	Feb 26, 2019

ANALYTICAL EQUIPMENT

Instrument/Make/Model	Analytical Principle	Last Multipoint Calibration
Nicolet 6700 AHR0801332	FTIR	Mar 28, 2016

Triad Data Available Upon Request

Signature on file

Approved for Release

© Mostardi Platt

Airgas
an Air Liquide company

Airgas Specialty Gases
Airgas USA, LLC
12722 S. Wentworth Ave.
Chicago, IL 60628
Airgas.com

CERTIFICATE OF ANALYSIS

Grade of Product: EPA Protocol

Part Number:	E02AI99E15A0705	Reference Number:	54-124573204-1
Cylinder Number:	CC400362	Cylinder Volume:	146.2 CF
Laboratory:	124 - Chicago - IL	Cylinder Pressure:	2015 PSIG
PGVP Number:	B12016	Valve Outlet:	590
Gas Code:	PPN,BALA	Certification Date:	Sep 07, 2016

Expiration Date: Sep 07, 2024

Certification performed in accordance with "EPA Traceability Protocol for Assay and Certification of Gaseous Calibration Standards (May 2012)" document EPA 600/R-12/531, using the assay procedures listed. Analytical Methodology does not require correction for analytical interference. This cylinder has a total analytical uncertainty as stated below with a confidence level of 95%. There are no significant impurities which affect the use of this calibration mixture. All concentrations are on a volume/volume basis unless otherwise noted.

Do Not Use This Cylinder below 100 psig, i.e. 0.7 megapascals.

ANALYTICAL RESULTS

Component	Requested Concentration	Actual Concentration	Protocol Method	Total Relative Uncertainty	Assay Dates
PROPANE	30.00 PPM	30.00 PPM	G1	+/- 0.5% NIST Traceable	09/07/2016
AIR	Balance				

CALIBRATION STANDARDS

Type	Lot ID	Cylinder No	Concentration	Uncertainty	Expiration Date
NTRM	09061732	CC303832	97.82 PPM PROPANE/AIR	+/- 0.5%	Jun 05, 2019

ANALYTICAL EQUIPMENT

Instrument/Make/Model	Analytical Principle	Last Multipoint Calibration
Nicolet 6700 AHR0801332	FTIR	Aug 09, 2016

Triad Data Available Upon Request

Signature on file

Approved for Release

© Mostardi Platt

Airgas

CERTIFICATE OF ANALYSIS

Grade of Product: EPA Protocol

Airgas USA, LLC
Airgas Specialty Gases
12722 S. Wentworth Avenue
Chicago, IL 60628
773-785-3000 Fax: 773-785-1828
Airgas.com

Part Number:	E02AI99E15A0453	Reference Number:	54-124555697-2
Cylinder Number:	CC49362	Cylinder Volume:	146.2 CF
Laboratory:	ASG - Chicago - IL	Cylinder Pressure:	2015 PSIG
PGVP Number:	B12016	Valve Outlet:	590
Gas Code:	PPN,BALA	Certification Date:	May 23, 2016

Expiration Date: May 23, 2024

Certification performed in accordance with "EPA Traceability Protocol for Assay and Certification of Gaseous Calibration Standards (May 2012)" document EPA 600/R-12/531, using the assay procedures listed. Analytical Methodology does not require correction for analytical interference. This cylinder has a total analytical uncertainty as stated below with a confidence level of 95%. There are no significant impurities which affect the use of this calibration mixture. All concentrations are on a volume/volume basis unless otherwise noted.

Do Not Use This Cylinder below 100 psig, i.e. 0.7 megapascals.

ANALYTICAL RESULTS

Component	Requested Concentration	Actual Concentration	Protocol Method	Total Relative Uncertainty	Assay Dates
PROPANE	300.0 PPM	304.0 PPM	G1	+/- 0.8% NIST Traceable	05/23/2016
AIR	Balance				

CALIBRATION STANDARDS

Type	Lot ID	Cylinder No	Concentration	Uncertainty	Expiration Date
NTRM	10060532	CC281503	495.3 PPM PROPANE/AIR	+/- 0.5%	Jan 06, 2022

ANALYTICAL EQUIPMENT

Instrument/Make/Model	Analytical Principle	Last Multipoint Calibration
Nicolet 6700 AHR0801332	FTIR	May 06, 2016

Triad Data Available Upon Request

© Mostardi Platt

Airgas
an Air Liquide company

Airgas Specialty Gases
Airgas USA, LLC
12722 S. Wentworth Ave.
Chicago, IL 60628
Airgas.com

CERTIFICATE OF ANALYSIS

Grade of Product: EPA Protocol

Part Number:	E02AI99E15A1472	Reference Number:	54-124549926-2
Cylinder Number:	EB0061670	Cylinder Volume:	146.3 CF
Laboratory:	124 - Chicago - IL	Cylinder Pressure:	2015 PSIG
PGVP Number:	B12016	Valve Outlet:	590
Gas Code:	PPN,BALA	Certification Date:	Apr 18, 2016

Expiration Date: Apr 18, 2024

Certification performed in accordance with "EPA Traceability Protocol for Assay and Certification of Gaseous Calibration Standards (May 2012)" document EPA 600/R-12/531, using the assay procedures listed. Analytical Methodology does not require correction for analytical interference. This cylinder has a total analytical uncertainty as stated below with a confidence level of 95%. There are no significant impurities which affect the use of this calibration mixture. All concentrations are on a volume/volume basis unless otherwise noted.

Do Not Use This Cylinder below 100 psig, i.e. 0.7 megapascals.

ANALYTICAL RESULTS

Component	Requested Concentration	Actual Concentration	Protocol Method	Total Relative Uncertainty	Assay Dates
PROPANE	600.0 PPM	603.4 PPM	G1	+/- 0.8% NIST Traceable	04/18/2016
AIR	Balance				

CALIBRATION STANDARDS

Type	Lot ID	Cylinder No	Concentration	Uncertainty	Expiration Date
NTRM	11060908	CC343401	1000.3 PPM PROPANE/NITROGEN	+/- 0.7%	Mar 04, 2017

ANALYTICAL EQUIPMENT

Instrument/Make/Model	Analytical Principle	Last Multipoint Calibration
Nicolet 6700 AHR0801332	FTIR	Mar 28, 2016

Triad Data Available Upon Request

Signature on file

Approved for Release

© Mostardi Platt

Airgas

CERTIFICATE OF ANALYSIS

Grade of Product: EPA Protocol

Airgas USA, LLC
Airgas Specialty Gases
12722 S. Wentworth Avenue
Chicago, IL 60628
773-785-3000 Fax: 773-785-1928
Airgas.com

Part Number:	E02AI99E15A0563	Reference Number:	54-124555697-3
Cylinder Number:	SG9161407BAL	Cylinder Volume:	146.3 CF
Laboratory:	ASG - Chicago - IL	Cylinder Pressure:	2015 PSIG
PGVP Number:	B12016	Valve Outlet:	590
Gas Code:	PPN,BALA	Certification Date:	May 23, 2016

Expiration Date: May 23, 2024

Certification performed in accordance with "EPA Traceability Protocol for Assay and Certification of Gaseous Calibration Standards (May 2012)" document EPA 600/R-12/531, using the assay procedures listed. Analytical Methodology does not require correction for analytical interference. This cylinder has a total analytical uncertainty as stated below with a confidence level of 95%. There are no significant impurities which affect the use of this calibration mixture. All concentrations are on a volume/volume basis unless otherwise noted.

Do Not Use This Cylinder below 100 psig, i.e. 0.7 megapascals.

ANALYTICAL RESULTS

Component	Requested Concentration	Actual Concentration	Protocol Method	Total Relative Uncertainty	Assay Dates
PROPANE	900.0 PPM	900.1 PPM	G1	+/- 0.7% NIST Traceable	05/23/2016
AIR	Balance				

CALIBRATION STANDARDS

Type	Lot ID	Cylinder No	Concentration	Uncertainty	Expiration Date
NTRM -	11060908	CC342401	1000.3 PPM PROPANE/NITROGEN	+/- 0.7%	Mar 04, 2017

ANALYTICAL EQUIPMENT

Instrument/Make/Model	Analytical Principle	Last Multipoint Calibration
Nicolet 6700 AHR0801332	FTIR	May 06, 2016

Triad Data Available Upon Request

Approved for Release

© Mostardi Platt

Airgas

Airgas Specialty Gases
12722 South Wentworth Avenue
Chicago, IL 60628
(773) 785-3000 Fax: (773) 785-1928
Airgas.com

CERTIFICATE OF ANALYSIS

Grade of Product: EPA Protocol

Part Number:	E02AI99E15A0453	Reference Number:	54-124501522-2
Cylinder Number:	CC318789	Cylinder Volume:	146.2 CF
Laboratory:	ASG - Chicago - IL	Cylinder Pressure:	2015 PSIG
PGVP Number:	B12015	Valve Outlet:	590
Gas Code:	PPN,BALA	Certification Date:	Jul 06, 2015

Expiration Date: Jul 06, 2023

Certification performed in accordance with "EPA Traceability Protocol for Assay and Certification of Gaseous Calibration Standards (May 2012)" document EPA 600/R-12/531, using the assay procedures listed. Analytical Methodology does not require correction for analytical interference. This cylinder has a total analytical uncertainty as stated below with a confidence level of 95%. There are no significant impurities which affect the use of this calibration mixture. All concentrations are on a volume/volume basis unless otherwise noted.

Do Not Use This Cylinder below 100 psig, i.e. 0.7 megapascals.

ANALYTICAL RESULTS

Component	Requested Concentration	Actual Concentration	Protocol Method	Total Relative Uncertainty	Assay Dates
PROPANE	300.0 PPM	299.9 PPM	G1	+/- 0.9% NIST Traceable	07/06/2015
AIR	Balance				

CALIBRATION STANDARDS

Type	Lot ID	Cylinder No	Concentration	Uncertainty	Expiration Date
NTRM	10060523	CC281408	495.3 PPM PROPANE/AIR	+/- 0.5%	Feb 19, 2016

ANALYTICAL EQUIPMENT

Instrument/Make/Model	Analytical Principle	Last Multipoint Calibration
Nicolet 6700 AHR0801332	FTIR	Jun 08, 2015

Triad Data Available Upon Request

Approved for Release

© Mostardi Platt

Airgas
an Air Liquide company

Airgas Specialty Gases
Airgas USA, LLC
12722 S. Wentworth Ave.
Chicago, IL 60628
Airgas.com

CERTIFICATE OF ANALYSIS

Grade of Product: EPA Protocol

Part Number:	E02AI99E15A1472	Reference Number:	54-124555697-6
Cylinder Number:	CC273334	Cylinder Volume:	146.3 CF
Laboratory:	124 - Chicago - IL	Cylinder Pressure:	2015 PSIG
PGVP Number:	B12016	Valve Outlet:	590
Gas Code:	PPN,BALA	Certification Date:	May 23, 2016

Expiration Date: May 23, 2024

Certification performed in accordance with "EPA Traceability Protocol for Assay and Certification of Gaseous Calibration Standards (May 2012)" document EPA 600/R-12/531, using the assay procedures listed. Analytical Methodology does not require correction for analytical interference. This cylinder has a total analytical uncertainty as stated below with a confidence level of 95%. There are no significant impurities which affect the use of this calibration mixture. All concentrations are on a volume/volume basis unless otherwise noted.

Do Not Use This Cylinder below 100 psig, i.e. 0.7 megapascals.

ANALYTICAL RESULTS

Component	Requested Concentration	Actual Concentration	Protocol Method	Total Relative Uncertainty	Assay Dates
PROPANE	600.0 PPM	599.6 PPM	G1	+/- 0.7% NIST Traceable	05/23/2016
AIR	Balance				

CALIBRATION STANDARDS

Type	Lot ID	Cylinder No	Concentration	Uncertainty	Expiration Date
NTRM	11060908	CC343401	1000.3 PPM PROPANE/NITROGEN	+/- 0.7%	Mar 04, 2017

ANALYTICAL EQUIPMENT

Instrument/Make/Model	Analytical Principle	Last Multipoint Calibration
Nicolet 6700 AHR0801332	FTIR	May 06, 2016

Triad Data Available Upon Request

Signature on file

Approved for Release

© Mostardi Platt

Airgas

CERTIFICATE OF ANALYSIS

Grade of Product: EPA Protocol

Part Number:	E02AI99E15A0563	Reference Number:	54-124530487-3
Cylinder Number:	SG9115220BAL	Cylinder Volume:	146.3 CF
Laboratory:	ASG - Chicago - IL	Cylinder Pressure:	2015 PSIG
PGVP Number:	B12015	Valve Outlet:	590
Gas Code:	PPN,BALA	Certification Date:	Dec 30, 2015

Expiration Date: Dec 30, 2023

Certification performed in accordance with "EPA Traceability Protocol for Assay and Certification of Gaseous Calibration Standards (May 2012)" document EPA 600/R-12/531, using the assay procedures listed. Analytical Methodology does not require correction for analytical interference. This cylinder has a total analytical uncertainty as stated below with a confidence level of 95%. There are no significant impurities which affect the use of this calibration mixture. All concentrations are on a volume/volume basis unless otherwise noted.

Do Not Use This Cylinder below 100 psig, i.e. 0.7 megapascals.

ANALYTICAL RESULTS

Component	Requested Concentration	Actual Concentration	Protocol Method	Total Relative Uncertainty	Assay Dates
PROPANE	900.0 PPM	908.9 PPM	G1	+/- 0.9% NIST Traceable	12/30/2015
AIR	Balance				

CALIBRATION STANDARDS

Type	Lot ID	Cylinder No	Concentration	Uncertainty	Expiration Date
NTRM	11060905	CC343401	1000.3 PPM PROPANE/NITROGEN	+/- 0.7%	Mar 04, 2017

ANALYTICAL EQUIPMENT

Instrument/Make/Model	Analytical Principle	Last Multipoint Calibration
Nicolet 6700 AHR0801332	FTIR	Dec 28, 2015

Triad Data Available Upon Request

Approved for Release

© Mostardi Platt

Airgas.

Airgas Specialty Gases
12722 South Wentworth Avenue
Chicago, IL 60628
(773) 785-3000 Fax: (773) 785-1928
www.airgas.com

CERTIFICATE OF ANALYSIS
Grade of Product: EPA Protocol

Part Number:	E02AI99E15A0452	Reference Number:	54-124447611-1
Cylinder Number:	CC159458	Cylinder Volume:	146.5 CF
Laboratory:	ASG - Chicago - IL	Cylinder Pressure:	2015 PSIG
PGVP Number:	B12014	Valve Outlet:	590
Gas Code:	PPN,BALA	Certification Date:	Aug 07, 2014

Expiration Date: Aug 07, 2022

Certification performed in accordance with "EPA Traceability Protocol for Assay and Certification of Gaseous Calibration Standards (May 2012)" document EPA 600/R-12/531, using the assay procedures listed. Analytical Methodology does not require correction for analytical interference. This cylinder has a total analytical uncertainty as stated below with a confidence level of 95%. There are no significant impurities which affect the use of this calibration mixture. All concentrations are on a volume/volume basis unless otherwise noted.

Do Not Use This Cylinder below 100 psig, i.e. 0.7 megapascals.

ANALYTICAL RESULTS

Component	Requested Concentration	Actual Concentration	Protocol Method	Total Relative Uncertainty	Assay Dates
PROPANE	3000 PPM	3003 PPM	G1	+/- 1.0% NIST Traceable	08/07/2014
AIR	Balance				

CALIBRATION STANDARDS

Type	Lot ID	Cylinder No	Concentration	Uncertainty	Expiration Date
NTRM	12061216	CC357644	5026 PPM PROPANE/NITROGEN	+/- 0.6%	Jan 20, 2018

ANALYTICAL EQUIPMENT

Instrument/Make/Model	Analytical Principle	Last Multipoint Calibration
Nicolet 6700 AHR0801332	FTIR	Jul 25, 2014

Triad Data Available Upon Request

Approved for Release

© Mostardi Platt

Airgas
an Air Liquide company

Airgas Specialty Gases
Airgas USA, LLC
12722 S. Wentworth Ave.
Chicago, IL 60628
Airgas.com

CERTIFICATE OF ANALYSIS

Grade of Product: EPA Protocol

Part Number:	E02AI99E15A2775	Reference Number:	54-124470423-4
Cylinder Number:	CC332245	Cylinder Volume:	87.1 CF
Laboratory:	124 - Chicago - IL	Cylinder Pressure:	1182 PSIG
PGVP Number:	B12015	Valve Outlet:	590
Gas Code:	PPN,BALA	Certification Date:	Jan 02, 2015

Expiration Date: Jan 02, 2023

Certification performed in accordance with "EPA Traceability Protocol for Assay and Certification of Gaseous Calibration Standards (May 2012)" document EPA 600/R-12/531, using the assay procedures listed. Analytical Methodology does not require correction for analytical interference. This cylinder has a total analytical uncertainty as stated below with a confidence level of 95%. There are no significant impurities which affect the use of this calibration mixture. All concentrations are on a volume/volume basis unless otherwise noted.

Do Not Use This Cylinder below 100 psig, i.e. 0.7 megapascals.

ANALYTICAL RESULTS

Component	Requested Concentration	Actual Concentration	Protocol Method	Total Relative Uncertainty	Assay Dates
PROPANE	6000 PPM	6033 PPM	G1	+/- 1.0% NIST Traceable	01/02/2015
AIR	Balance				

CALIBRATION STANDARDS

Type	Lot ID	Cylinder No	Concentration	Uncertainty	Expiration Date
NTRM	00052121	SG903488ALB	1.031 % PROPANE/NITROGEN	+/- 1.0%	Jun 07, 2019

ANALYTICAL EQUIPMENT

Instrument/Make/Model	Analytical Principle	Last Multipoint Calibration
Nicolet 6700 AHR0801332	FTIR	Dec 08, 2014

Triad Data Available Upon Request

Signature on file

Approved for Release

© Mostardi Platt

Airgas
an Air Liquide company

Airgas Specialty Gases
Airgas USA, LLC
12722 S. Wentworth Ave.
Chicago, IL 60628
Airgas.com

CERTIFICATE OF ANALYSIS

Grade of Product: EPA Protocol

Part Number:	E02AI99E15A0694	Reference Number:	54-124594670-4
Cylinder Number:	CC340799	Cylinder Volume:	57.9 CF
Laboratory:	124 - Chicago - IL	Cylinder Pressure:	783 PSIG
PGVP Number:	B12017	Valve Outlet:	590
Gas Code:	PPN,BALA	Certification Date:	Jan 05, 2017

Expiration Date: Jan 05, 2025

Certification performed in accordance with "EPA Traceability Protocol for Assay and Certification of Gaseous Calibration Standards (May 2012)" document EPA 600/R-12/531, using the assay procedures listed. Analytical Methodology does not require correction for analytical interference. This cylinder has a total analytical uncertainty as stated below with a confidence level of 95%. There are no significant impurities which affect the use of this calibration mixture. All concentrations are on a volume/volume basis unless otherwise noted.

Do Not Use This Cylinder below 100 psig, i.e. 0.7 megapascals.

ANALYTICAL RESULTS

Component	Requested Concentration	Actual Concentration	Protocol Method	Total Relative Uncertainty	Assay Dates
PROPANE	9000 PPM	8679 PPM	G1	+/- 1% NIST Traceable	01/05/2017
AIR	Balance				

CALIBRATION STANDARDS

Type	Lot ID	Cylinder No	Concentration	Uncertainty	Expiration Date
NTRM	00052121	SG903488ALB	1.031 % PROPANE/NITROGEN	+/- 1.0%	Jun 07, 2019

ANALYTICAL EQUIPMENT

Instrument/Make/Model	Analytical Principle	Last Multipoint Calibration
Nicolet 6700 AHR0801332	FTIR	Dec 22, 2016

Triad Data Available Upon Request

Signature on file

Approved for Release

© Mostardi Platt

Appendix I – Oven Pressure Determination Data

© Mostardi Platt

Volumetric Flow Rate Determination Field Data Sheet

Project Number: M170406 Date: 1/26/17
Client: East Bult Commissary Test Number: Line 1
Test Location: Negative Draft Into Oven Start Time: Line 2
Source Condition: using Dry Ice. End Time:
Test Engineer: JWC Test Tech:

Duct Diameter _____ ft
Flue Area _____ ft^2
Port Length _____"
P_{bar} _____ "Hg
Static _____ "H_2O
Static _____ "Hg
P_s _____ "Hg

CO_2 % _____
O_2 % _____
N_2 % _____
Meter No. _____

Upstream Disturbance, Diameters _____
Downstream Disturbance, Diameters _____
Pitot ID _____ Pitot Coefficient (C_p) _____
Wet Bulb Temp _____
Dry Bulb Temp _____
B_{ws} _____
Fluke # _____

Leak Checks Passed@
Pre _____ Inches H_2O
Post _____ Inches H_2O
Umbilical ID ___

	Line 1 Inlet ~~Port-Point~~	Line 1 outlet ~~ΔP~~	Line 2 Inlet/outlet ~~Temp. °F~~	~~Temp. °F~~	Null Point Angle, Degrees	Port-Point #	ΔP	Temp. °F	$\sqrt{\Delta P}$	Null Point Angle, Degrees
1000	✓	✓	✓							
1115	✓	✓	✓							
1215	✓	✓	✓							
1400	✓	✓	✓							
1500	✓	✓	✓							
1530	✓	✓	✓							
Average										

44 x CO_2% + .32 x O_2% + .28 x N_2% = _____ (Md)

(_____ Md × _____ 1-Bws) + (18 × _____ Bws) = _____ (Ms)

85.49 × ____Cp × $\sqrt{\frac{(\_\_\_\_\_)Ts\ °R}{\_\_\_Ms \times \_\_\_Ps}}$ × ____ $\sqrt{\Delta P}$ = ____ ft/sec (Vs)

_____ Vs × _____ Flue Area × 60 = _____ acfm

17.647 × _____ acfm × $\frac{Ps}{Ts\ °R}$ = _____ scfm x 60 = _____ scfh

© Mostardi Platt

Volumetric Flow Rate Determination Field Data Sheet

Project Number: M170406 | Date: 1/27/17
Client: East Belt Commissary | Test Number: Line 1 6000 lbs/hr
Test Location: | Start Time: Line 2 [illegible]
Source Condition: | End Time:
Test Engineer: [illegible] | Test Tech:

Duct Diameter ______ ft
Flue Area ______ ft²
Port Length ______ "
P_{bar} ______ "Hg
Static______ "H_2O
Static______ "Hg
P_s______ "Hg

CO_2 % ______
O_2 % ______
N_2 % ______
Meter No.______

Upstream Disturbance, Diameters ______
Downstream Disturbance, Diameters ______
Pitot ID______ Pitot Coefficient (C_p) ______
Wet Bulb Temp ______
Dry Bulb Temp ______
B_{ws} ______
Fluke # ______

Leak Checks Passed@
Pre ______ Inches H_2O
Post ______ Inches H_2O
Umbilical ID ___

	Port-Point #	Line 1 Oven Inlet	Line 1 Oven Outlet ~~Temp.~~	as propane	* 3.6 ~~Null~~ as ethanol ~~Point Angle, Degrees~~	~~Port Point #~~	inlet CH4	outlet CH4 ~~Temp~~		~~Null Point Angle, Degrees~~
1	0700	✓	✓	(522.1)	1879.6	4.1	16.2	15.5		99.70% DE
	730	✓	✓							
	800	✓	✓							
			✓							
2	0840	✓	✓							99.62% DE
	0910	✓	✓							
	0940	✓	✓							
3	1035	✓	✓							
	1105	✓	✓							
	1135	✓	✓							
	Average									

Run 1 0650-0750
Run 2 0840-0940
Run 3 1055-1135

44 x CO_2% + .32 x O_2% + .28 x N_2% = ______ (Md)

(______ Md x ______ 1-Bws) + (18 x ______ Bws) = ______ (Ms)

$$85.49 \times ___ C_p \times \sqrt{\frac{(_____)T_s\ °R}{___ M_s \times ___ P_s}} \times ___ \sqrt{\Delta P} = ___ \text{ ft/sec } (V_s)$$

______ Vs x ______ Flue Area x 60 = ______ acfm

$$17.647 \times ___ \text{acfm} \times \frac{P_s}{T_s\ °R} = _____ \text{ scfm} \times 60 = _____ \text{ scfh}$$

Volumetric Flow Rate Determination Field Data Sheet

Project Number:	M170406	Date:	2/16/17
Client:	East Balt Commissary	Test Number:	Line 1
Test Location:	Negative Draft Into	Start Time:	Line 2
Source Condition:	Oven Using Dry Ice	End Time:	
Test Engineer:		Test Tech:	

Duct Diameter _____ ft
Flue Area _____ ft^2
Port Length _____ "
P_{bar} _____ "Hg
Static _____ "H_2O
Static _____ "Hg
P_s _____ "Hg

CO_2 % _____
O_2 % _____
N_2 % _____
Meter No. _____

Upstream Disturbance, Diameters _____
Downstream Disturbance, Diameters _____
Pitot ID _____ Pitot Coefficient (C_p) _____
Wet Bulb Temp _____
Dry Bulb Temp _____
B_{ws} _____
Fluke # _____

Leak Checks Passed@
Pre _____ Inches H_2O
Post _____ Inches H_2O
Umbilical ID _____

Port-Point #	Line 1 oven ~~Temp.~~ Fluke	Line 2 oven ~~Temp.~~ Fluke	$\sqrt{\Delta P}$	Null Point Angle, Degrees	Port-Point #	ΔP	Temp. °F	$\sqrt{\Delta P}$	Null Point Angle, Degrees
1040	✓	✓							
1110	✓	✓							
1140	✓	✓							
1220	✓	✓							
1250	✓	✓							
1320	✓	✓							
1356	✓	✓							
1426	✓	✓							
1510	✓	✓							
Average									

$44 \times CO_2\% + .32 \times O_2\% + .28 \times N_2\% =$ _____ (Md)

(_____ Md × _____ 1-Bws) + (18 × _____ Bws) = _____ (Ms)

$85.49 \times$ ____Cp $\times \sqrt{\frac{(\_\_\_\_\_)Ts\ °R}{\_\_\_Ms \times \_\_\_Ps}} \times$ ____ $\sqrt{\Delta P}$ = ____ ft/sec (Vs)

_____ Vs × _____ Flue Area × 60 = _____ acfm

$17.647 \times$ _____ acfm $\times \frac{Ps}{Ts\ °R}$ = _____ scfm x 60 = _____ scfh

R1 1040-1140
R2 1220-1320
R3 1356-1436, 1452-1510

END OF THE REPORT

© Mostardi Platt

mostardi platt

888 Industrial Drive
Elmhurst, Illinois 60126
630-993-2100

EQUISTAR

Equistar Chemicals, LP
8805 North Tabler Road
Morris, IL 60450

March 27, 2017

RECEIVED
MAR 29 2017
AIR ENFORCEMENT BRANCH
U.S. EPA REGION 5

Director, Air and Radiation

77 West Jackson Blvd.
Chicago, Illinois 60604-3507

Yasmine Keppner-Bauman
Illinois Environmental Protection Agency
Bureau of Air - Compliance Section (MC 40)
PO Box 19276
Springfield, Illinois 62794-9276

Martin Tippin
Illinois Environmental Protection Agency
Division of Air Pollution Control
9511 West Harrison
Des Plaines, Illinois 60016

Re: Semi-Annual Report, NSPS Fugitive Emissions
Sept 1, 2016 to Feb 28, 2017
Equistar Chemicals, LP - Morris Plant
Application No. 96010018 / I.D. No. 063800AAC

Pursuant to 40 CFR 60 Subpart VV, Section 60.487, Equistar Chemicals, LP NSPS semi-annual fugitive emissions report for the following process units:

1. Linear Low Density Polyethylene Line 5
2. Linear Low Density Polyethylene Line 6
3. Ethylene Plant De-ethanizer Section (last NSPS VV report due to transition to NSPS VVa)
4. Low Density Polyethylene Unit Off-gas Treatment System
5. Low Density Polyethylene Line 4

If you have questions, please contact me at 815-942-7298

Jeff Popidinski
Environmental Tech

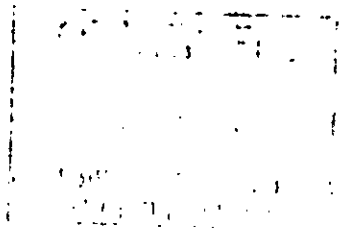

NSPS SEMI-ANNUAL FUGITIVE EMISSION REPORT SUMMARY
40 CFR 60 Subpart VV § 60.487(c)&(d)

1. § 60.487(c)(1): Process unit identification	Linear Low Density Polyethylene Line 5
2. § 60.487(c)(2)(vii): Explain any delay of repairs and where appropriate, why a process unit shutdown was technically infeasible.	No Delay of Repairs this reporting period.
3. § 60.487(c)(3): Dates of process units shutdowns that occurred within semiannual reporting period.	9/1/16 THRU 9/30/16 - 719.98. Hrs. 10/1/16 Thru 10/2/16 - 31.00 Hrs. 12/11/16 Thru 12/31/16 - 493.98 Hrs. 1/1/17 Thru 1/7/17 - 148.33 Hrs. 2/1/17 Thru 2/14/17 - 302.50 Hrs.
4. § 60.487(c)(4): Any revisions to items reported if changes have occurred since the initial report or subsequent revisions to the initial report.	A total of 23 valves were added, 6 were removed from the systems that are subject to 40 CFR 60 Subpart VV during the reporting period.
5. § 60.487(d): If complying with the alternative standard for percentage of valves leaking and skip period for leak detection and repair, has the agency been notified 90 day prior to implementing?	Not Implemented

	Sept 16	Oct 16	Nov 16	Dec 16	Jan 17	Feb 17		TOTALS
VALVES								
Leaks Detected	0	4	0	0	1	0		5
Total Monitored	0	1520	8	38	1590	1		3157
Missed repair deadlines	0	0	0	0	0	0		0
Delay of Repairs	0	0	0	0	0	0		0
PUMPS								
Leaks Detected	0	0	0	0	0	0		0
Total Monitored		7	7	7	7	7		35
Missed repair deadlines	0	0	0	0	0	0		0
Delay of Repairs	0	0	0	0	0	0		0
Number of Pumps With Dual Mech. Seal System for Which Leaks Were Detected								
Leaks Detected	0	0	0	0	0	0		0
Total Monitored	0	0	0	0	0	0		0
Missed repair deadlines	0	0	0	0	0	0		0
Delay of Repairs	0	0	0	0	0	0		0
COMPRESSORS								
Leaks Detected	0	0	0	0	0	0		0
Total Monitored	0	0	0	1	0	0		1
Missed repair deadlines	0	0	0	0	0	0		0
Delay of Repairs	0	0	0	0	0	0		0
Number of Compressor Leaks Detected Due to Sensor Indication Failure								
Leaks Detected	0	0	0	0	0	0		0
Total Monitored	0	0	0	0	0	0		0
Missed repair deadlines	0	0	0	0	0	0		0
Delay of Repairs	0	0	0	0	0	0		0

NSPS SEMI-ANNUAL FUGITIVE EMISSION REPORT SUMMARY
40 CFR 60 Subpart VV § 60.487(c)&(d)

1. § 60.487(c)(1): Process unit identification	Linear Low Density Polyethylene Line 6
2. § 60.487(c)(2)(vii): Explain any delay of repairs and where appropriate, why a process unit shutdown was technically infeasible.	No Delay of Repairs this reporting period.
3. § 60.487(c)(3): Dates of process units shutdowns that occurred within semiannual reporting period.	9/1/16 Thru 9/30/17 - 719.98 Hrs. 10/1/16 Thru 10/3/16 - 61.75 Hrs. 10/28/16 Thru 10/31/16 - 78.82 Hrs. 11/2/16 Thru 11/3/16 - 37.98 Hrs. 12/18/16/Thru 12/20/- 16 Hrs. 2/26/17 Thru 2/28/17 - 33.00 Hrs.
4. § 60.487(c)(4): Any revisions to items reported if changes have occurred since the initial report or subsequent revisions to the initial report.	A total of 0 valves were added, 19 were removed from the systems that are subject to 40 CFR 60 Subpart VV during the reporting period.
5. § 60.487(d): If complying with the alternative standard for percentage of valves leaking and skip period for leak detection and repair, has the agency been notified 90 day prior to implementing?	Not Implemented

	Sept 16	Oct 16	Nov 16	Dec 16	Jan 17	Feb 17		TOTALS
VALVES								
Leaks Detected	0	4	0	0	3	0		7
Total Monitored	0	1677	5	18	1679	0		3379
Missed repair deadlines	0	0	0	0	0	0		0
Delay of Repairs	0	0	0	0	0	0		0
PUMPS								
Leaks Detected	0	0	0	0	0	0		0
Total Monitored	0	10	10	10	10	10		50
Missed repair deadlines	0	0	0	0	0	0		0
Delay of Repairs	0	0	0	0	0	0		0
Number of Pumps With Dual Mech. Seal System for Which Leaks Were Detected								
Leaks Detected	0	0	0	0	0	0		0
Total Monitored	0	0	0	0	0	0		0
Missed repair deadlines	0	0	0	0	0	0		0
Delay of Repairs	0	0	0	0	0	0		0
COMPRESSORS								
Leaks Detected	0	0	0	0	0	0		0
Total Monitored	0	0	0	2	0	0		2
Missed repair deadlines	0	0	0	0	0	0		0
Delay of Repairs	0	0	0	0	0	0		0
Number of Compressor Leaks Detected Due to Sensor Indication Failure								
Leaks Detected	0	0	0	0	0	0		0
Total Monitored	0	0	0	0	0	0		0
Missed repair deadlines	0	0	0	0	0	0		0
Delay of Repairs	0	0	0	0	0	0		0

NSPS SEMI-ANNUAL FUGITIVE EMISSION REPORT SUMMARY
40 CFR 60 Subpart VV § 60.487(c)&(d)

1. § 60.487(c)(1): Process unit identification	Ethylene Plant De-ethanizer Section
2. § 60.487(c)(2)(vii): Explain any delay of repairs and where appropriate, why a process unit shutdown was technically infeasible.	No Delay of Repairs this reporting period.
3. § 60.487(c)(3): Dates of process units shutdowns that occurred within semiannual reporting period.	9/1/16 Thru 9/30/16 719.98 Hrs.
4. § 60.487(c)(4): Any revisions to items reported if changes have occurred since the initial report or subsequent revisions to the initial report.	There were 14 Valves added and 2 deleted removed from the systems that are subject to 40 CFR 60 Subpart VV during the reporting period. Please note that effective October 1, 2016 the Ethylene Plant became subject to NSPS Subpart VVa. As a result, there was no monitoring completed under NSPS VV. This will be the final NSPS VV report for the Ethylene Plant as future NSPS reports will be submitted under NSPS VVa. The initial NSPS VVa semiannual report will be submitted by April 30, 2017
5. § 60.487(d): If complying with the alternative standard for percentage of valves leaking and skip period for leak detection and repair, has the agency been notified 90 day prior to implementing?	Not Implemented

	Sept 16	Oct 16	Nov 16	Dec 16	Jan 17	Feb 17		TOTALS
VALVES								
Leaks Detected	0	0	0	0	0	0		0
Total Monitored	0	0	0	0	0	0		0
Missed repair deadlines	0	0	0	0	0	0		0
Delay of Repairs	0	0	0	0	0	0		0
PUMPS								
Leaks Detected	0	0	0	0	0	0		
Total Monitored	0	0	0	0	0	4		0
Missed repair deadlines	0	0	0	0	0	0		0
Delay of Repairs	0	0	0	0	0	0		0
Number of Pumps With Dual Mech. Seal System for Which Leaks Were Detected								
Leaks Detected	0	0	0	0	0	0		0
Total Monitored	0	0	0	0	0	0		0
Missed repair deadlines	0	0	0	0	0	0		0
Delay of Repairs	0	0	0	0	0	0		0
COMPRESSORS								
Leaks Detected	0	0	0	0	0	0		0
Total Monitored	0	0	0	0	0	0		0
Missed repair deadlines	0	0	0	0	0	0		0
Delay of Repairs	0	0	0	0	0	0		0
Number of Compressor Leaks Detected Due to Sensor Indication Failure								
Leaks Detected	0	0	0	0	0	0		0
Total Monitored	0	0	0	0	0	0		0
Missed repair deadlines	0	0	0	0	0	0		0
Delay of Repairs	0	0	0	0	0	0		0

NSPS SEMI-ANNUAL FUGITIVE EMISSION REPORT SUMMARY
40 CFR 60 Subpart VV § 60.487(c)&(d)

1. § 60.487(c)(1): Process unit identification	Low Density Polyethylene Unit Off-gas Treatment System
2. § 60.487(c)(2)(vii): Explain any delay of repairs and where appropriate, why a process unit shutdown was technically infeasible.	No Delay of Repairs this reporting period.
3. § 60.487(c)(3): Dates of process units shutdowns that occurred within semiannual reporting period.	7/19/16 Shut Down for a Plant Wide Turnaround. Startup will be about 9/18/16.
4. § 60.487(c)(4): Any revisions to items reported if changes have occurred since the initial report or subsequent revisions to the initial report.	There were 20 Valves added and 1 deleted removed from the systems that are subject to 40 CFR 60 Subpart VV during the reporting period.
5. § 60.487(d): If complying with the alternative standard for percentage of valves leaking and skip period for leak detection and repair, has the agency been notified 90 day prior to implementing?	Not Implemented

	Sept 16	Oct 16	Nov 16	Dec 16	Jan 17	Feb 17		TOTALS
VALVES								
Leaks Detected	0	0	0	0	0	0		0
Total Monitored	0	184	0	3	207	0		394
Missed repair deadlines	0	0	0	0	0	0		0
Delay of Repairs	0	0	0	0	0	0		0
PUMPS								
Leaks Detected	0	0	0	0	0	0		0
Total Monitored	0	2	2	2	2	2		10
Missed repair deadlines	0	0	0	0	0	0		0
Delay of Repairs	0	0	0	0	0	0		0
Number of Pumps With Dual Mech. Seal System for Which Leaks Were Detected								
Leaks Detected	0	0	0	0	0	0		0
Total Monitored	0	0	0	0	0	0		0
Missed repair deadlines	0	0	0	0	0	0		0
Delay of Repairs	0	0	0	0	0	0		0
COMPRESSORS								
Leaks Detected	0	0	0	0	0	0		0
Total Monitored	0	0	0	0	0	0		0
Missed repair deadlines	0	0	0	0	0	0		0
Delay of Repairs	0	0	0	0	0	0		0
Number of Compressor Leaks Detected Due to Sensor Indication Failure								
Leaks Detected	0	0	0	0	0	0		0
Total Monitored	0	0	0	0	0	0		0
Missed repair deadlines	0	0	0	0	0	0		0
Delay of Repairs	0	0	0	0	0	0		0

NSPS SEMI-ANNUAL FUGITIVE EMISSION REPORT SUMMARY
40 CFR 60 Subpart VV § 60.487(c)&(d)

1. § 60.487(c)(1): Process unit identification	Low Density Polyethylene Line 4
2. § 60.487(c)(2)(vii): Explain any delay of repairs and where appropriate, why a process unit shutdown was technically infeasible.	No Delay of Repairs this reporting period.
3. § 60.487(c)(3): Dates of process units shutdowns that occurred within semiannual reporting period.	7/19/16 Shut Down for a Plant Wide Turnaround. Startup will be about 9/18/16.
4. § 60.487(c)(4): Any revisions to items reported if changes have occurred since the initial report or subsequent revisions to the initial report.	There were no Added or Deleted components' this reporting period.
5. § 60.487(d): If complying with the alternative standard for percentage of valves leaking and skip period for leak detection and repair, has the agency been notified 90 day prior to implementing?	Not Implemented

	Sept 16	Oct 16	Nov 16	Dec 16	Jan 17	Feb 17		TOTALS
VALVES								
Leaks Detected	0	1	0	0	0	0		1
Total Monitored	0	527	1	1	535	0		1064
Missed repair deadlines	0	0	0	0	0	0		0
Delay of Repairs	0	0	0	0	0	0		0
PUMPS								
Leaks Detected	0	0	0	0	0	0		0
Total Monitored	0	2	2	2	2	2		10
Missed repair deadlines	0	0	0	0	0	0		0
Delay of Repairs	0	0	0	0	0	0		0
Number of Pumps With Dual Mech. Seal System for Which Leaks Were Detected								
Leaks Detected	0	0	0	0	0	0		0
Total Monitored	0	0	0	0	0	0		0
Missed repair deadlines	0	0	0	0	0	0		0
Delay of Repairs	0	0	0	0	0	0		0
COMPRESSORS								
Leaks Detected	0	0	0	0	0	0		0
Total Monitored	0	0	0	0	0	0		0
Missed repair deadlines	0	0	0	0	0	0		0
Delay of Repairs	0	0	0	0	0	0		0
Number of Compressor Leaks Detected Due to Sensor Indication Failure								
Leaks Detected	0	0	0	0	0	0		0
Total Monitored	0	0	0	0	0	0		0
Missed repair deadlines	0	0	0	0	0	0		0
Delay of Repairs	0	0	0	0	0	0		0

Ferrara candy company

RECEIVED
MAR 29 2017
AIR ENFORCEMENT BRANCH
U.S. EPA REGION 5

March 28, 2017

Attention: Compliance Tracker (AE-17J)
Air Enforcement and Compliance Assurance Branch
U.S. Environmental Protection Agency, Region 5
77 W. Jackson Boulevard
Chicago, Illinois 60604

RE: Operations & Maintenance Plan
Ferrara Candy Company
Identification No. 031090AAY

To Whom it May Concern:

Enclosed please find the Operations & Maintenance Plan for the Ferrara Candy Company facility located at 7301 West Harrison Street in Forest Park, Illinois (the facility). The purpose of the plan is to outline the operating and maintenance procedures for the emissions control devices and monitoring systems at the facility to assist in ensuring compliance with the applicable state and federal environmental regulations and emission limitation/standards.

If you have any questions, please contact our consultant, Britt Wenzel of Mostardi Platt at (630) 993-2123.

Regards,

Craig Caswell
Regulatory Engineer

Site-Specific Operation and Maintenance Plan

Permanent Total Enclosure (PTE) for Panning Rooms and Catalytic Oxidizer System/ Sugar and Starch Molding Dust Collection Systems

Ferrara Candy Company

7301 West Harrison Street
Forest Park, Illinois

Plan Date: March 2017

Table of Contents

Record of Change 1
1.0 Purpose 2
2.0 Scope 2
3.0 Responsibilities 2
4.0 Process Description 3
4.1 Terminology/Definitions 3
4.2 Process Overview 3
4.3 Federally Enforceable State Operating Permit (FESOP) Emission Limitations and Standards 4
4.4 Monitoring Requirements 4
5.0 Operations & Maintenance Plan 5
5.1 CO and Panning Operations 5
5.1.1 Monitoring Parameters and Operating Ranges/Values 5
5.2 Sugar Transfer and Use/Starch Molding Reclamation Dust Collection Operations 6
5.3 Quality Control 7
5.3.1 CO and Panning PTEs 7
5.3.1 Dust Collection Systems 7
6.0 Plan Review and Status Reporting 7
6.1 Plan Review 7
6.2 Compliance Reporting 8
7.0 References 8

RECORD OF CHANGE

Prepared by: Ferrara Candy Company.

Regulatory Requirement: Ensure compliance with 35 IAC 218, Subpart TT, 35 IAC 212, and Federally Enforceable State Operating Permit (Application No. 73010040).

Approved by: John Conversa

3/28/17 — Date

Signature

DATE OF REVIEW:

REVISION	DATE	DESCRIPTION
1	March 2017	Update Plan to reflect current FESOP requirements/Latest Polishing Pan Emission Testing Program Operating Parameters

1.0 Purpose

To describe procedures followed to:

1. Identify the parameters to be monitored to demonstrate that the capture system which includes a permanent total enclosure (PTE) is performing as demonstrated during the initial and subsequent performance tests used to set emission limitations and standards for applicable panning operations,
2. Identify the Catalytic Oxidizer (CO) temperature range that is maintained that demonstrates compliance with the standard,
3. Demonstrate the parameters selected are indicative of properly operating capture and emission control systems,
4. Outline emission unit and control device monitoring procedures and methods, and
5. Outline emission unit and control device operating and maintenance procedures.

2.0 Scope

This procedure is applicable for the following equipment:

- Candy polishing and grossing pans and capture systems operated in conjunction with the CO (application of both non-compliant and compliant coatings without daily weighted average provision 35 IAC 218.986). The enclosures are connected by a closed-duct system that draws VOM emissions from the PTE to the Catalytic Oxidizer (CO) control device.
- Starch Molding Process/Sugar transfer and associated dust collection and control systems which route particulate matter (PM) emission to the facility's dust collection and/or starch reclamation systems.

3.0 Responsibilities

- Director of US Manufacturing will be responsible for procedure approval and implementation.
- Regulatory Engineer will be responsible for procedure review and implementation.
- Production & Maintenance Supervisors have the responsibility of ensuring that this procedure is fully utilized and followed by appropriate employees of Ferrara Candy Company, and any third parties engaged in the maintenance and or handling of the CO. Additionally, the Production Manager has the responsibility of reporting any variances involving the operation of the control device or the capture systems.

4.0 Process Description

4.1 Terminology/Definitions

Permanent Total Enclosure (PTE): Is a permanently installed structure that encloses an emission source(s) that by definition captures 100 percent of the emissions generated by the emission source(s) and those emissions are discharge to a control device.

Catalytic Oxidizer (CO): Is a catalytic and thermal device that utilizes a ceramic bed that control volatile organic material emissions and a combustion chamber to provide for thermal destruction of VOM within the combustion chamber. The destruction of VOM is completed in the combustion chamber through oxidization at elevated temperatures to form CO_2 and H_2O as the by-products. The latest stack testing program (2016) established the CO operating temperature at 550F to obtain 95% overall control for VOM emissions from the candy polishing operations. The CO combustion temperature will be set at 560F to assist in maintaining the combustion temperature above 550F when minor temperature fluctuations occur.

Dust Collector: A dust collection system is an air quality improvement system used in industrial and commercial facilities to improve breathable air quality and safety.

Baghouse: A device in which particulates are removed from a stream of exhaust gases (as from a sugar silo) as the stream passes through a large cloth bag.

4.2 Process Overview

Ferrara Pan Candy Company (Ferrara Pan) manufactures a variety of candies such as jellybeans, hard candy, chocolate and chocolate covered fruits and nuts by a variety of processes. The main ingredient in making candy is sugar. Other candy making ingredients include starches, colors, chocolate, fruit, nuts, flavors and confectioner's glaze (glaze). The flavors and glazes contain Volatile Organic Material (VOM) applied in a process called "panning".

Starch Molding and Sugar Use

Sugar and corn syrup are blended into a liquid base into which colors and flavors are added to form the final candy blend that is deposited into molded starch boards. (imprinted starch filled boards) to produce soft candies (e.g., gummie type products). The starch molds are allowed to sit prior to dumping the starch boards into an enclosed starch sifter that removes the candies for packaging and reclaims the starch for reuse. Dust collection systems are used to both collect the starch for reuse and to assist in controlling PM emissions from this process.

Granular sugar is delivered to the facility in bulk via railroad car. The sugar is transferred from rail cars to storage silos by an enclosed bucket conveyor transfer system. The silos are equipped with baghouses to control particulate emissions. The sugar is then transferred from silos to various process areas inside the facility building using screw conveyor, bucket conveyors and pneumatic transfer systems.

Candy Polishing Process

The panning process involves the use of rotating ovate shaped containers. These pans are used in a variety of candy making processes as described below:

- Chocolate Panning/Polishing usually starts with almonds, peanuts, or raisins rather than sugar centers and heated chocolate is sprayed or poured onto them. After the chocolate is applied, a confectioner's glaze is poured into the pan and as it evaporates it leaves a glossy finish that "polishes" the chocolate to an attractive shiny finish. These confectioner's glazes contain VOMs.
- Pan Polishing usually starts with "grossed" centers and other ingredients such as sugar, color and flavors are added to build up a shell around the centers. As a final step, a confectioner's glaze is added as a protective and decorative layer. These confectioner's glazes contain VOMs.

4.3 Federally Enforceable State Operating Permit (FESOP) Emission Limitations and Standards

Ferrara Pan has been operating under an Illinois EPA FESOP (Application No. 73010040) limiting VOM emissions from its usage of glaze and flavors to less than 25 tons VOM per year. Further, state regulations (35 IAC 218.986) require the facility to either capture and control at least 81% of the VOM emissions from the candy polishing process or use low VOM-containing glazes that contain <3.5 pounds VOM per gallon less water/exempt compounds (e.g., compliant glazes).

Ferrara Pan currently uses both compliant and non-compliant glazes during the production process. However, all current pan polishing operations that use glazes, regardless of whether compliant with the VOM content limit or not, are currently controlled by the facility's 12,000 cubic feet per minute (CFM) CO. Condition 10a of the facility's FESOP requires an overall VOM emission control of 95%. To obtain this overall control efficiency, these polishing operations are conducted within 4 PTEs which route the 100% of the VOM emissions from the pan polishing activities to the CO.

Further, to meet the 95% overall control efficiency, the CO must maintain a combustion chamber temperature across the combustion chamber of 550°F. This CO operating temperature was established during the February 5, 2016 Stack Testing Program conducted at the facility per Condition 5g of the facility's current FESOP.

4.4 Monitoring Requirements

Pursuant to 35 IAC 218.991(a)(2) and FESOP Condition NO. 19d, any owner or operator of a VOM emission unit which is subject to the requirements of 35 IAC 218 Subpart TT and complying by the use of emission capture and control equipment shall comply with the following:

- Collect and record all of the following information each day and maintain the information at the source for a period of three years:
  - i. Control device monitoring data.
  - ii. A log of operating time for the capture system, control device, monitoring equipment and the associated emission source(s).
  - iii. A maintenance log for the capture system, control device and monitoring equipment detailing all routine and non-routine maintenance performed including dates and duration of any outages.

    Note: Continuous CO combustion inlet and outlet temperature requires a temperature monitoring accuracy of +/- 1 percent of the temperature measured in

Celsius (C) or +/- 0.5C, whichever is greater (FESOP Condition Nos. 15 a and b).

- Maintain records of the following items to demonstrate compliance with the starch molding and sugar storage and use emission standards/limitations:

  i. Records addressing use of good operating practices for the dust collectors, baghouses, cyclones, and catalytic oxidizer;
  ii. Records for periodic inspection of the dust collectors, baghouses, cyclones, and catalytic oxidizer with date, individual performing the inspection, and nature of inspection; and
  iii. Records for prompt repair of defects, with identification and description of defect, effect on emissions, date identified, date repaired, and nature of repair.

All records and logs required by the FESOP will be retained at a readily accessible location at the source for at least five (5) years from the date of entry and shall be made available for inspection and copying by the Illinois EPA or USEPA upon request.

5.0 Operations & Maintenance Plan

The facility makes a commitment to take timely corrective action during periods of excursion where the monitored indicators are out of range. A corrective action may include an investigation of the reason for the excursion, evaluation of the situation and necessary follow-up action to return operation within the indicator range. An excursion is determined by the averaged discrete data point over a period of time. An excursion does not necessarily indicate a violation of an applicable requirement.

If the corrective action measures fail to return the indicators to the appropriate range or it is determined that emission standards and/or limitations have been exceeded, the facility will report the exceedance to the Illinois EPA within 30 days of the exceedance.

Note: If subsequent emission testing demonstrates compliance with emission limits and standards at new set operating conditions, then these new indicator ranges may be set for monitoring and the new ranges can be incorporated in the facility's FESOP. If emission testing demonstrates noncompliance with emission limits, then the facility, within 30 days, will propose a schedule to implement corrective action to bring the source into compliance and demonstrate compliance.

5.1 CO and Panning Operations

5.1.1 Monitoring Parameters and Operating Ranges/Values

PTE Differential Pressure

The operating range for the PTE is based on the design criteria established by USEPA Method 204, Criteria for and Verification of a Permanent or Temporary Total Enclosure, 40 CFR 51, Appendix M. This regulation establishes an operating differential pressure of negative 0.007 inches H_2O (or a greater negative pressure).

The capture efficiency of the PTEs will be periodically monitored using differential pressure measuring devices. The monitor will detect the interior pressure of the enclosure versus the

ambient pressure of the production building. The enclosures are maintained at a differential pressure of at least negative 0.007 inches H_2O (or a greater negative pressure) while the candy polishing operations are being completed.

CO Combustion Chamber Temperature
The minimum combustion chamber temperature was established during the latest performance test in February 2016. The stack testing report was submitted establishing the average combustion temperature of 550°F. In February 2017, under an agreement with the U.S EPA, the facility agreed to operate the CO at a combustion temperature of 550°F (up from 525°F).

Each panning PTE has been equipped with a visual alarm. This alarm is triggered at each PTE if the CO combustion temperature drops below 550°F. Panning room operators have been instructed to cease polishing operations upon alarm activation.

Each PTE is vented to the CO. To ensure that the CO is operating properly the combustion chamber temperature at the catalyst be inlet and outlet will be continuously measured and recorded on the circular log and electronically.

The monitoring system is equipped with a visual alarm which visually notifies panning room operators when the CO combustion temperature falls below the required operating temperature and polishing panning operations must be ceased. The panning room operators also are to maintain a log of panning room operations, including operator name, date, panning room operating time, and alarm system activation (if identified).

Additionally, maintenance department personnel perform scheduled preventative maintenance checks/monitoring of the polishing equipment, CO, and PTEs to ensure the equipment is operating properly. Maintenance and inspection records will be kept for five (5) years and available upon request.

5.2 Sugar Transfer and Use/Starch Molding Reclamation Dust Collection Operations

5.2.1 Monitoring Parameters and Operating Ranges/Values

Continuous monitoring of the starch molding process and associated reclamation and dust collection system is not required. Periodic monitoring is not required during periods of time greater than one day in which the source does not operate. In addition, to assist in ensuring the starch molding system dust collection systems are operating properly, the following monitoring and maintenance activities are conducted:

- **Periodic Activities** - Visible emissions, visible by an observer looking generally toward the zenith at a point beyond the property line of the source, will be observed on a periodic basis to ensure no visible emissions during the material handling operation of the starch molding process. If visible emissions are observed this would be an exceedance not a violation and action will be taken as soon as possible, but no later than 8 hours.
- **Monthly Activities -** Check the cleaning sequence of the baghouse/collector. Pulse jet baghouse - check the air delivery system. Check the hopper functions and performance.

  If leaks or abnormal conditions are detected the appropriate measures for remediation will be implemented within eight (8) hours. Written records of the inspection and any

action resulting from the inspections will be maintained

- **Quarterly Activities** - Thoroughly inspect bags/collection system for leaks and wear (Look for obvious holes or tears in the bags).

  If leaks or abnormal conditions are detected the appropriate measures for remediation will be implemented within eight (8) hours. Bag replacement should be documented by identifying the date, time and location of the bag in relationship to the other bags. The location should be identified on an overhead drawing of the bag layout in the baghouse.

  A written record of the inspection and any action resulting from the inspection will be maintained.
- **Semiannual Activities** - Inspect every 6 months all components that are not subject to wear or plugging, including structural components, housing, ducts and hoods.

  If leaks or abnormal conditions are detected the appropriate measures for remediation will be implemented within eight (8) hours. Maintain a written record of the inspection and any action resulting from the inspection.

Additionally, maintenance department personnel perform scheduled preventative maintenance checks/monitoring of the baghouses/dust collection system to ensure the equipment is operating properly. Maintenance and inspection records will be kept for 5 years and available upon request.

5.3 Quality Control

5.3.1 CO and Panning PTEs

The following quality control measures will be used to ensure proper operation of the CO and associated panning process PTEs:

- Semi-annual calibration of continuous temperature monitor and electronic logging system;
- Annual check of visual alarm system;
- Annual third party CO maintenance inspection;
- Periodic catalyst bed analysis; and
- An adequate inventory of spare parts shall be kept.
- Routine inspection and measurement of PTE air flow(s).

5.3.1 Dust Collection Systems

The following quality control measures will be used to ensure proper operation of the baghouses/dust collectors:

- The filter equipment will be operated and maintained according to the manufacturers recommendations.
- An adequate inventory of spare parts shall be kept.

6.0 Plan Review and Status Reporting

6.1 Plan Review

This plan will be reviewed routinely and updated to address changes or improvements in operations and/or monitoring activities.

6.2 Compliance Reporting

Pursuant to 35 IAC 218.991(a)(3), any owner or operator of a VOM emission unit which is subject to the requirements of 35 IAC 218 Subpart TT and complying by the use of emission capture and control equipment shall comply notify the Illinois EPA:

- Of any violation of the requirements of 35 218 Subpart TT by sending a copy any record showing a violation to the Illinois EPA within 30 days following the occurrence of the violation.
- At least 30 calendar days before changing the method of compliance with 35 IAC 218 Subpart TT from the use of capture systems and control devices to the use of complying coatings
- Upon changing the method of compliance with 35 IAC 218 Subpart TT from the use of capture systems and control devices to the use of complying coatings.

The report shall include the emissions released in accordance with the recordkeeping requirements, a copy of the relevant records, and a description of the exceedance or violation and efforts to reduce emissions and future occurrences

7.0 References

1. CO Operations & Maintenance Manual (Catalytic Products).
2. Ferrara Candy Company Preventative Maintenance Program.
3. 35 IAC 218, Subpart TT.
4. 35 IAC 212.
5. Facility Federally Enforceable State Operating Permit.
6. Typical baghouse monitoring and indicating devices - APTI - SI:412A

Site-Specific Operation and Maintenance Plan

Permanent Total Enclosure (PTE) for Panning Rooms and Catalytic Oxidizer System/ Sugar and Starch Molding Dust Collection Systems

Ferrara Candy Company

7301 West Harrison Street
Forest Park, Illinois

Plan Date: March 2017

Table of Contents

Record of Change 1
1.0 Purpose 2
2.0 Scope 2
3.0 Responsibilities 2
4.0 Process Description 3
4.1 Terminology/Definitions 3
4.2 Process Overview 3
4.3 Federally Enforceable State Operating Permit (FESOP) Emission Limitations and Standards 4
4.4 Monitoring Requirements 4
5.0 Operations & Maintenance Plan 5
5.1 CO and Panning Operations 5
5.1.1 Monitoring Parameters and Operating Ranges/Values 5
5.2 Sugar Transfer and Use/Starch Molding Reclamation Dust Collection Operations 6
5.3 Quality Control 7
5.3.1 CO and Panning PTEs 7
5.3.1 Dust Collection Systems 7
6.0 Plan Review and Status Reporting 7
6.1 Plan Review 7
6.2 Compliance Reporting 8
7.0 References 8

RECORD OF CHANGE

Prepared by: Ferrara Candy Company.

Regulatory Requirement: Ensure compliance with 35 IAC 218, Subpart TT, 35 IAC 212, and Federally Enforceable State Operating Permit (Application No. 73010040).

Approved by: John Conversa

3/28/17
Date

Signature

DATE OF REVIEW:

REVISION	DATE	DESCRIPTION
1	March 2017	Update Plan to reflect current FESOP requirements/Latest Polishing Pan Emission Testing Program Operating Parameters

1.0 Purpose

To describe procedures followed to:

1. Identify the parameters to be monitored to demonstrate that the capture system which includes a permanent total enclosure (PTE) is performing as demonstrated during the initial and subsequent performance tests used to set emission limitations and standards for applicable panning operations,
2. Identify the Catalytic Oxidizer (CO) temperature range that is maintained that demonstrates compliance with the standard,
3. Demonstrate the parameters selected are indicative of properly operating capture and emission control systems,
4. Outline emission unit and control device monitoring procedures and methods, and
5. Outline emission unit and control device operating and maintenance procedures.

2.0 Scope

This procedure is applicable for the following equipment:

- Candy polishing and grossing pans and capture systems operated in conjunction with the CO (application of both non-compliant and compliant coatings without daily weighted average provision 35 IAC 218.986). The enclosures are connected by a closed-duct system that draws VOM emissions from the PTE to the Catalytic Oxidizer (CO) control device.
- Starch Molding Process/Sugar transfer and associated dust collection and control systems which route particulate matter (PM) emission to the facility's dust collection and/or starch reclamation systems.

3.0 Responsibilities

- Director of US Manufacturing will be responsible for procedure approval and implementation.
- Regulatory Engineer will be responsible for procedure review and implementation.
- Production & Maintenance Supervisors have the responsibility of ensuring that this procedure is fully utilized and followed by appropriate employees of Ferrara Candy Company, and any third parties engaged in the maintenance and or handling of the CO. Additionally, the Production Manager has the responsibility of reporting any variances involving the operation of the control device or the capture systems.

4.0 Process Description

4.1 Terminology/Definitions

Permanent Total Enclosure (PTE): Is a permanently installed structure that encloses an emission source(s) that by definition captures 100 percent of the emissions generated by the emission source(s) and those emissions are discharge to a control device.

Catalytic Oxidizer (CO): Is a catalytic and thermal device that utilizes a ceramic bed that control volatile organic material emissions and a combustion chamber to provide for thermal destruction of VOM within the combustion chamber. The destruction of VOM is completed in the combustion chamber through oxidization at elevated temperatures to form CO_2 and H_2O as the by-products. The latest stack testing program (2016) established the CO operating temperature at 550F to obtain 95% overall control for VOM emissions from the candy polishing operations. The CO combustion temperature will be set at 560F to assist in maintaining the combustion temperature above 550F when minor temperature fluctuations occur.

Dust Collector: A dust collection system is an air quality improvement system used in industrial and commercial facilities to improve breathable air quality and safety.

Baghouse: A device in which particulates are removed from a stream of exhaust gases (as from a sugar silo) as the stream passes through a large cloth bag.

4.2 Process Overview

Ferrara Pan Candy Company (Ferrara Pan) manufactures a variety of candies such as jellybeans, hard candy, chocolate and chocolate covered fruits and nuts by a variety of processes. The main ingredient in making candy is sugar. Other candy making ingredients include starches, colors, chocolate, fruit, nuts, flavors and confectioner's glaze (glaze). The flavors and glazes contain Volatile Organic Material (VOM) applied in a process called "panning".

Starch Molding and Sugar Use

Sugar and corn syrup are blended into a liquid base into which colors and flavors are added to form the final candy blend that is deposited into molded starch boards. (imprinted starch filled boards) to produce soft candies (e.g., gummie type products). The starch molds are allowed to sit prior to dumping the starch boards into an enclosed starch sifter that removes the candies for packaging and reclaims the starch for reuse. Dust collection systems are used to both collect the starch for reuse and to assist in controlling PM emissions from this process.

Granular sugar is delivered to the facility in bulk via railroad car. The sugar is transferred from rail cars to storage silos by an enclosed bucket conveyor transfer system. The silos are equipped with baghouses to control particulate emissions. The sugar is then transferred from silos to various process areas inside the facility building using screw conveyor, bucket conveyors and pneumatic transfer systems.

Candy Polishing Process

The panning process involves the use of rotating ovate shaped containers. These pans are used in a variety of candy making processes as described below:

- Chocolate Panning/Polishing usually starts with almonds, peanuts, or raisins rather than sugar centers and heated chocolate is sprayed or poured onto them. After the chocolate is applied, a confectioner's glaze is poured into the pan and as it evaporates it leaves a glossy finish that "polishes" the chocolate to an attractive shiny finish. These confectioner's glazes contain VOMs.
- Pan Polishing usually starts with "grossed" centers and other ingredients such as sugar, color and flavors are added to build up a shell around the centers. As a final step, a confectioner's glaze is added as a protective and decorative layer. These confectioner's glazes contain VOMs.

4.3 Federally Enforceable State Operating Permit (FESOP) Emission Limitations and Standards

Ferrara Pan has been operating under an Illinois EPA FESOP (Application No. 73010040) limiting VOM emissions from its usage of glaze and flavors to less than 25 tons VOM per year. Further, state regulations (35 IAC 218.986) require the facility to either capture and control at least 81% of the VOM emissions from the candy polishing process or use low VOM-containing glazes that contain <3.5 pounds VOM per gallon less water/exempt compounds (e.g., compliant glazes).

Ferrara Pan currently uses both compliant and non-compliant glazes during the production process. However, all current pan polishing operations that use glazes, regardless of whether compliant with the VOM content limit or not, are currently controlled by the facility's 12,000 cubic feet per minute (CFM) CO. Condition 10a of the facility's FESOP requires an overall VOM emission control of 95%. To obtain this overall control efficiency, these polishing operations are conducted within 4 PTEs which route the 100% of the VOM emissions from the pan polishing activities to the CO.

Further, to meet the 95% overall control efficiency, the CO must maintain a combustion chamber temperature across the combustion chamber of 550°F. This CO operating temperature was established during the February 5, 2016 Stack Testing Program conducted at the facility per Condition 5g of the facility's current FESOP.

4.4 Monitoring Requirements

Pursuant to 35 IAC 218.991(a)(2) and FESOP Condition NO. 19d, any owner or operator of a VOM emission unit which is subject to the requirements of 35 IAC 218 Subpart TT and complying by the use of emission capture and control equipment shall comply with the following:

- Collect and record all of the following information each day and maintain the information at the source for a period of three years:
  - i. Control device monitoring data.
  - ii. A log of operating time for the capture system, control device, monitoring equipment and the associated emission source(s).
  - iii. A maintenance log for the capture system, control device and monitoring equipment detailing all routine and non-routine maintenance performed including dates and duration of any outages.

    Note: Continuous CO combustion inlet and outlet temperature requires a temperature monitoring accuracy of +/- 1 percent of the temperature measured in

Celsius (C) or +/- 0.5C, whichever is greater (FESOP Condition Nos. 15 a and b).

- Maintain records of the following items to demonstrate compliance with the starch molding and sugar storage and use emission standards/limitations:

  i. Records addressing use of good operating practices for the dust collectors, baghouses, cyclones, and catalytic oxidizer;
  ii. Records for periodic inspection of the dust collectors, baghouses, cyclones, and catalytic oxidizer with date, individual performing the inspection, and nature of inspection; and
  iii. Records for prompt repair of defects, with identification and description of defect, effect on emissions, date identified, date repaired, and nature of repair.

All records and logs required by the FESOP will be retained at a readily accessible location at the source for at least five (5) years from the date of entry and shall be made available for inspection and copying by the Illinois EPA or USEPA upon request.

5.0 Operations & Maintenance Plan

The facility makes a commitment to take timely corrective action during periods of excursion where the monitored indicators are out of range. A corrective action may include an investigation of the reason for the excursion, evaluation of the situation and necessary follow-up action to return operation within the indicator range. An excursion is determined by the averaged discrete data point over a period of time. An excursion does not necessarily indicate a violation of an applicable requirement.

If the corrective action measures fail to return the indicators to the appropriate range or it is determined that emission standards and/or limitations have been exceeded, the facility will report the exceedance to the Illinois EPA within 30 days of the exceedance.

Note: If subsequent emission testing demonstrates compliance with emission limits and standards at new set operating conditions, then these new indicator ranges may be set for monitoring and the new ranges can be incorporated in the facility's FESOP. If emission testing demonstrates noncompliance with emission limits, then the facility, within 30 days, will propose a schedule to implement corrective action to bring the source into compliance and demonstrate compliance.

5.1 CO and Panning Operations

5.1.1 Monitoring Parameters and Operating Ranges/Values

PTE Differential Pressure

The operating range for the PTE is based on the design criteria established by USEPA Method 204, Criteria for and Verification of a Permanent or Temporary Total Enclosure, 40 CFR 51, Appendix M. This regulation establishes an operating differential pressure of negative 0.007 inches H_2O (or a greater negative pressure).

The capture efficiency of the PTEs will be periodically monitored using differential pressure measuring devices. The monitor will detect the interior pressure of the enclosure versus the

ambient pressure of the production building. The enclosures are maintained at a differential pressure of at least negative 0.007 inches H_2O (or a greater negative pressure) while the candy polishing operations are being completed.

CO Combustion Chamber Temperature
The minimum combustion chamber temperature was established during the latest performance test in February 2016. The stack testing report was submitted establishing the average combustion temperature of 550°F. In February 2017, under an agreement with the U.S EPA, the facility agreed to operate the CO at a combustion temperature of 550°F (up from 525°F).

Each panning PTE has been equipped with a visual alarm. This alarm is triggered at each PTE if the CO combustion temperature drops below 550°F. Panning room operators have been instructed to cease polishing operations upon alarm activation.

Each PTE is vented to the CO. To ensure that the CO is operating properly the combustion chamber temperature at the catalyst be inlet and outlet will be continuously measured and recorded on the circular log and electronically.

The monitoring system is equipped with a visual alarm which visually notifies panning room operators when the CO combustion temperature falls below the required operating temperature and polishing panning operations must be ceased. The panning room operators also are to maintain a log of panning room operations, including operator name, date, panning room operating time, and alarm system activation (if identified).

Additionally, maintenance department personnel perform scheduled preventative maintenance checks/monitoring of the polishing equipment, CO, and PTEs to ensure the equipment is operating properly. Maintenance and inspection records will be kept for five (5) years and available upon request.

5.2 Sugar Transfer and Use/Starch Molding Reclamation Dust Collection Operations

5.2.1 Monitoring Parameters and Operating Ranges/Values

Continuous monitoring of the starch molding process and associated reclamation and dust collection system is not required. Periodic monitoring is not required during periods of time greater than one day in which the source does not operate. In addition, to assist in ensuring the starch molding system dust collection systems are operating properly, the following monitoring and maintenance activities are conducted:

- **Periodic Activities** - Visible emissions, visible by an observer looking generally toward the zenith at a point beyond the property line of the source, will be observed on a periodic basis to ensure no visible emissions during the material handling operation of the starch molding process. If visible emissions are observed this would be an exceedance not a violation and action will be taken as soon as possible, but no later than 8 hours.
- **Monthly Activities -** Check the cleaning sequence of the baghouse/collector. Pulse jet baghouse - check the air delivery system. Check the hopper functions and performance.

  If leaks or abnormal conditions are detected the appropriate measures for remediation will be implemented within eight (8) hours. Written records of the inspection and any

action resulting from the inspections will be maintained

- **Quarterly Activities -** Thoroughly inspect bags/collection system for leaks and wear (Look for obvious holes or tears in the bags).

  If leaks or abnormal conditions are detected the appropriate measures for remediation will be implemented within eight (8) hours. Bag replacement should be documented by identifying the date, time and location of the bag in relationship to the other bags. The location should be identified on an overhead drawing of the bag layout in the baghouse.

  A written record of the inspection and any action resulting from the inspection will be maintained.
- **Semiannual Activities -** Inspect every 6 months all components that are not subject to wear or plugging, including structural components, housing, ducts and hoods.

  If leaks or abnormal conditions are detected the appropriate measures for remediation will be implemented within eight (8) hours. Maintain a written record of the inspection and any action resulting from the inspection.

Additionally, maintenance department personnel perform scheduled preventative maintenance checks/monitoring of the baghouses/dust collection system to ensure the equipment is operating properly. Maintenance and inspection records will be kept for 5 years and available upon request.

5.3 Quality Control

5.3.1 CO and Panning PTEs

The following quality control measures will be used to ensure proper operation of the CO and associated panning process PTEs:

- Semi-annual calibration of continuous temperature monitor and electronic logging system;
- Annual check of visual alarm system;
- Annual third party CO maintenance inspection;
- Periodic catalyst bed analysis; and
- An adequate inventory of spare parts shall be kept.
- Routine inspection and measurement of PTE air flow(s).

5.3.1 Dust Collection Systems

The following quality control measures will be used to ensure proper operation of the baghouses/dust collectors:

- The filter equipment will be operated and maintained according to the manufacturers recommendations.
- An adequate inventory of spare parts shall be kept.

6.0 Plan Review and Status Reporting

6.1 Plan Review

This plan will be reviewed routinely and updated to address changes or improvements in operations and/or monitoring activities.

6.2 Compliance Reporting

Pursuant to 35 IAC 218.991(a)(3), any owner or operator of a VOM emission unit which is subject to the requirements of 35 IAC 218 Subpart TT and complying by the use of emission capture and control equipment shall comply notify the Illinois EPA:

- Of any violation of the requirements of 35 218 Subpart TT by sending a copy any record showing a violation to the Illinois EPA within 30 days following the occurrence of the violation.
- At least 30 calendar days before changing the method of compliance with 35 IAC 218 Subpart TT from the use of capture systems and control devices to the use of complying coatings
- Upon changing the method of compliance with 35 IAC 218 Subpart TT from the use of capture systems and control devices to the use of complying coatings.

The report shall include the emissions released in accordance with the recordkeeping requirements, a copy of the relevant records, and a description of the exceedance or violation and efforts to reduce emissions and future occurrences

7.0 References

1. CO Operations & Maintenance Manual (Catalytic Products).
2. Ferrara Candy Company Preventative Maintenance Program.
3. 35 IAC 218, Subpart TT.
4. 35 IAC 212.
5. Facility Federally Enforceable State Operating Permit.
6. Typical baghouse monitoring and indicating devices - APTI - SI:412A