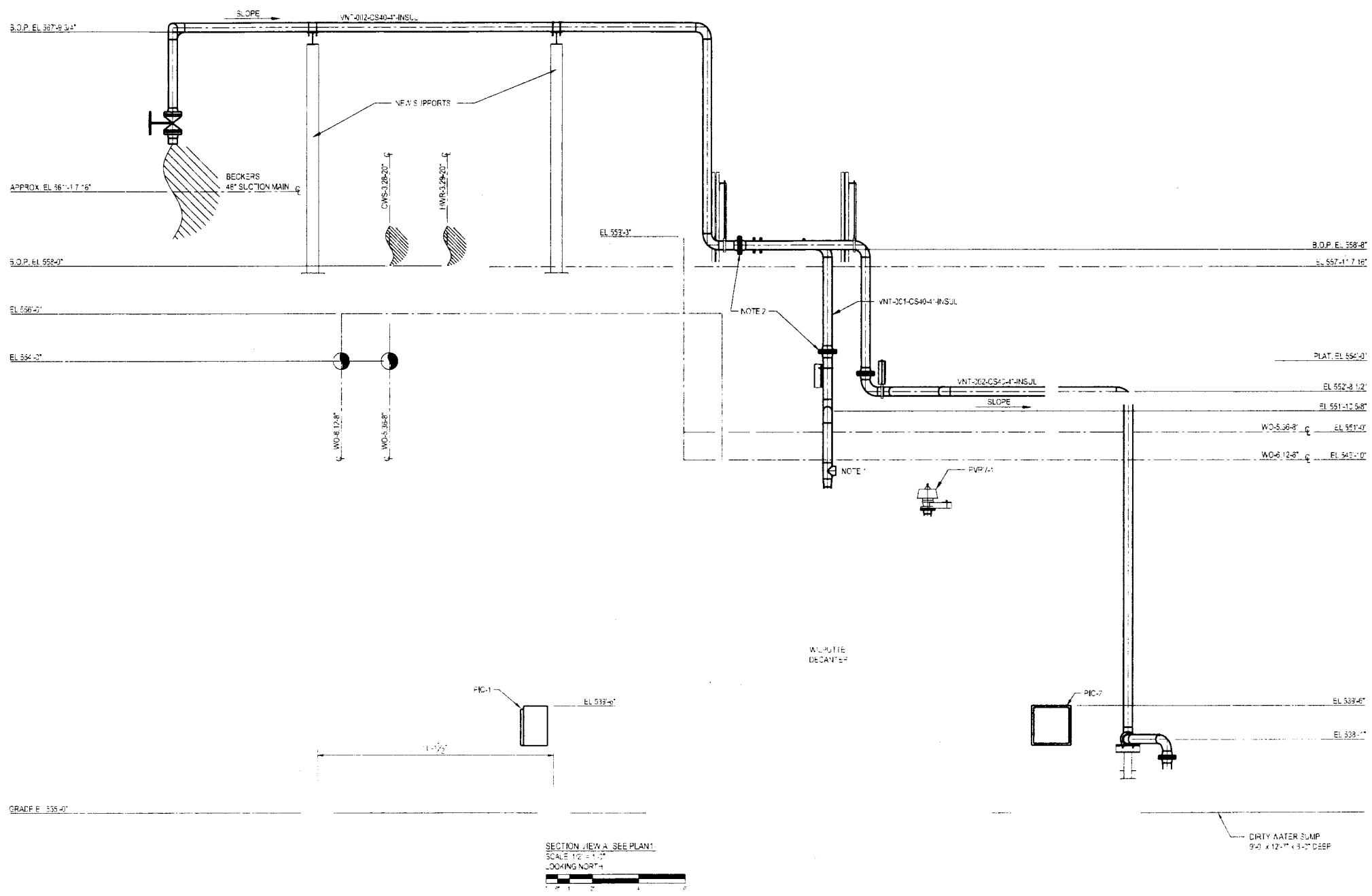

NOTES:

1. 4" TEE BRANCH TO BE BLANK DRILLED WITH 1" HOLE PLUGGED.
2. FLANGES INCLUDED TO DISMANTLE IF TUBE BUNDLE MUST BE REMOVED.

REFERENCE	DWG. NO.
N/S PIPE BRIDGE	723-3749-0300
PROCESS WATER DECANTER TANK (WILPUTTE)	723-3638-9286
PIPING LIGHT OIL RECOVERY UNIT MISC SECTS	723-3640-9267
PIPING LIGHT OIL RECOVERY UNIT	723-3640-9266

REV	DESCRIPTION	CHECKED	DATE
1	ISSUED FOR REVIEW	HJS	01/31/17

DRAWN BY	RJG	01/17/17
CHECKED BY	HJS	01/20/17
APPROVED BY	SV	

Borton Lawson
ENGINEERING
ARCHITECTURE
www.borton-lawson.com

ABC COKE
A Division of Drummond Company, Inc.
TARRANT, ALABAMA

ABC COKE
TARRANT, ALABAMA
VENT CAPTURE
WILPUTTE DECANTER & DIRTY WATER SUMP
SECTION VIEW A

CUSTOMER PROJECT NO. 2016-2379-003
SCALE 1/2" = 1'-0"

ELEV1-1

REVISION A

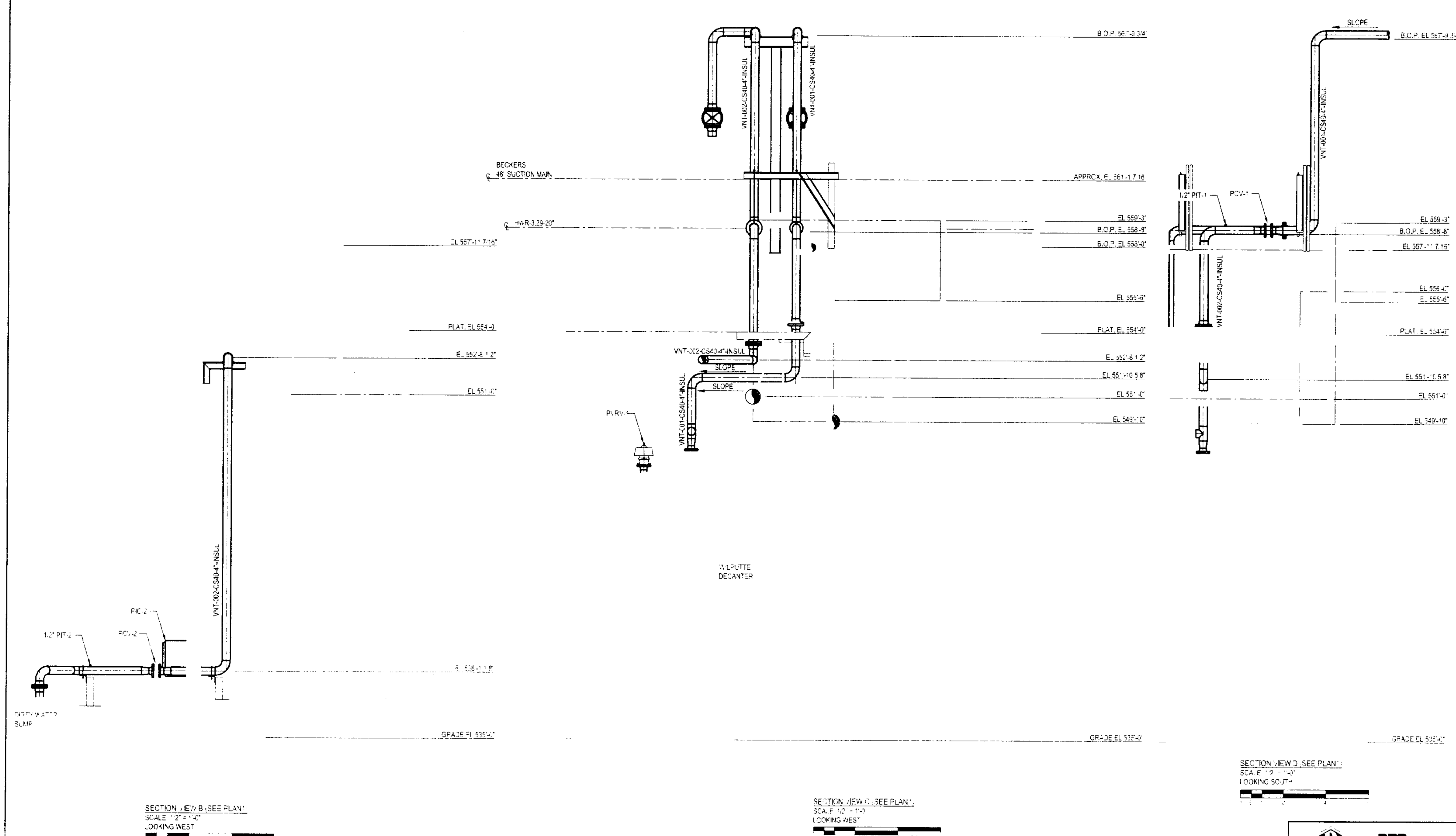

REFERENCE	DWG. NO.
N/S PIPE BRIDGE	723-3740-0300
PROCESS WATER DECANTER TANK (WILPUTTE)	723-3630-0280
PIPING LIGHT OIL RECOVERY UNIT MISC SECTS	723-3640-0267
PIPING LIGHT OIL RECOVERY UNIT	723-3640-0266

REV	DESCRIPTION	CHECKED	DATE
A	ISSUED FOR REVIEW	MJS	01/31/17

FILE NAME: ELEV1-2

DRAWN BY: RJG DATE: 01/17/17
CHECKED BY: MJS DATE: 01/20/17
APPROVED BY: SW

Borton Lawson
ENGINEERING
ARCHITECTURE
www.borton-lawson.com

ABC COKE
A Division of Drummond Company, Inc.
TARRANT, ALABAMA

ABC COKE
TARRANT, ALABAMA
VENT CAPTURE
WILPUTTE DECANTER & DIRTY WATER SUMP
SECTION VIEW B, C, & D

CUSTOMER PROJECT NO. 2016-2379-003
SCALE 1/2" = 1'-0"

ELEV1-2

REVISION A

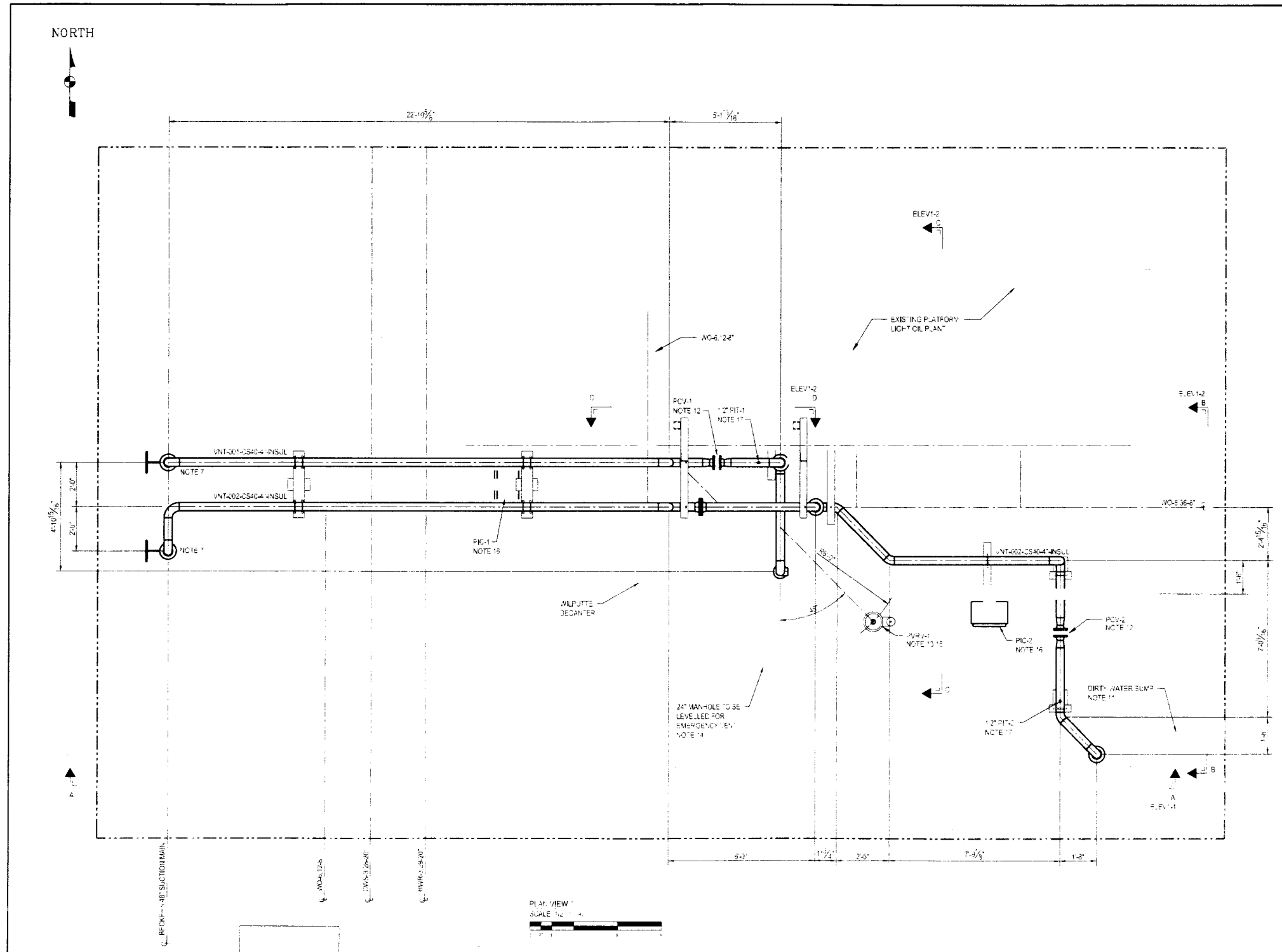

NOTES:

1. FABRICATION SHALL BE IN ACCORDANCE WITH ABC COKE PIPING STANDARDS.
2. 3" AND LARGER PIPE TO BE SEAMLESS OR WELDED, ASTM A-53 GR.B STANDARD WEIGHT.
3. 3" AND LARGER FITTINGS TO BE SEAMLESS STEEL BUTT WELDING, ASTM A-234 GR. WPB, STANDARD WEIGHT.
4. 3" AND LARGER FLANGES TO BE 150# RF ANSI STANDARD FORGED STEEL, WELD NECK OR SLIP-ON TYPE, ASTM A-181 GR. II.
5. USE FLAT FACE FLANGE WHERE REQUIRED TO MATE EQUIPMENT.
6. PIPE SECTIONS SHALL BE SHOP PRIMED AND FINISHED COATED WITH INCURON INDURETHANE ENAMEL.
7. WALL THICKNESS MUST BE CHECKED BEFORE HOT TAPS. HOT TAP LOCATIONS SHOWN ON DRAWING MAY NEED TO BE CHANGED. USE SUPPORT WHERE NEEDED.
8. ALL LINES SLOPED BACKWARDS TO VAPOR SOURCE.
9. ALL UNUSED HOLES TO BE PLUGGED BEFORE STARTUP.
10. INCLUDE 1 1/2" THICK CALCIUM SILICATE PER ASTM SPECIFICATIONS C533-87 PLUS ALUMINUM JACKET. ALL LINES TO BE STEAM TRACED.
11. DIRTY WATER SUMP PUMP TO BE LOCATED LATER.
12. PCV-1 AND PCV-2 TO BE FISHER 85H 8 IN WCC BODY BUTTERFLY VALVE WITH 1061 ACTUATOR SETTING UPRIGHT AND 3610J 3-15 PSI POSITIONER.
13. PVRV-1 VAREC MODEL 2013B-144V-FFA/S-00-02 SET @ 9" WC VAC, 0.75 OZ.
14. EMERGENCY VENT, GROTH MODEL # 20004-24-S-T200 A.P.I. 650 DRILLED, SET @ 10" WC.
15. CONTRACTOR TO INSTALL NEW LEVELLED 8" RF ANSI 150# NOZZLE. AVOID EXISTING VENTS IF PRESENT.
16. PIC-1 AND PIC-2 TO BE YOKOGAWA CONTROLLER CT-550 OR EQUIV. INCLUDE 20 x 20 x 12" DEEP SS SEE-THROUGH CONTROL PANEL AND LOCAL ALARM. ADD UNISTRUT SUPPORT AS REQUIRED.
17. PIT-1 AND PIT-2 TO BE YOKOGAWA STYLE 81 OR HARP MODEL EJA110A STYLE S1 SUFFIX - BLS1B-KDE A7/F1/D1.
18. ALL DIMENSIONS TO BE FIELD CHECKED.

ABC COKE
A Division of Drummond Company, Inc.
TARRANT, ALABAMA

REFERENCE	DWG. NO.
PROCESS WATER DECANTER TANK (WILPUTTE)	723-3620-5280
PIPING LIGHT OIL RECOVERY UNIT MISC SECTS	723-3640-5267
PIPING LIGHT OIL RECOVERY UNIT	723-3640-5266

REV	DESCRIPTION	CHECKED	DATE
3			
2			
1			
A	ISSUED FOR REVIEW	MJS	01/31/17

PLANT: SV
DRAWN BY: RJG 01/17/17
CHECKED BY: MJS 01/20/17
APPROVED BY: DATE

Borton Lawson
ENGINEERING
ARCHITECTURE
www.borton-lawson.com

ABC COKE
CUSTOMER PROJECT NO. 2016-1237-003
TARRANT, ALABAMA
SCALE: 1/2" = 1'-0"
VENT CAPTURE
WILPUTTE DECANTER & DIRTY WATER SUMP
PLAN VIEW
PLAN1
REVISION A

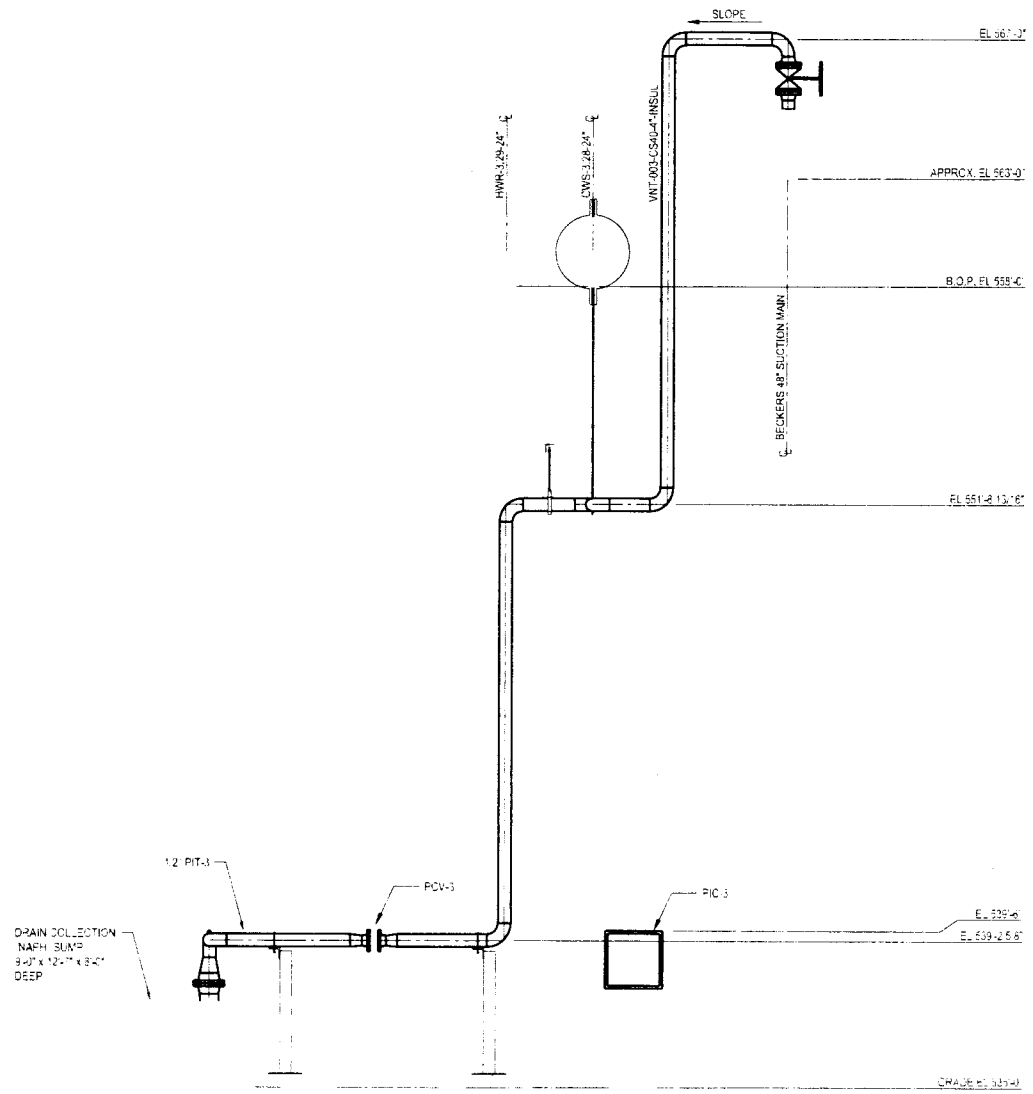

SECTION VIEW A (SEE PLAN2)
SCALE 1/2" = 1'-0"
LOOKING SOUTH

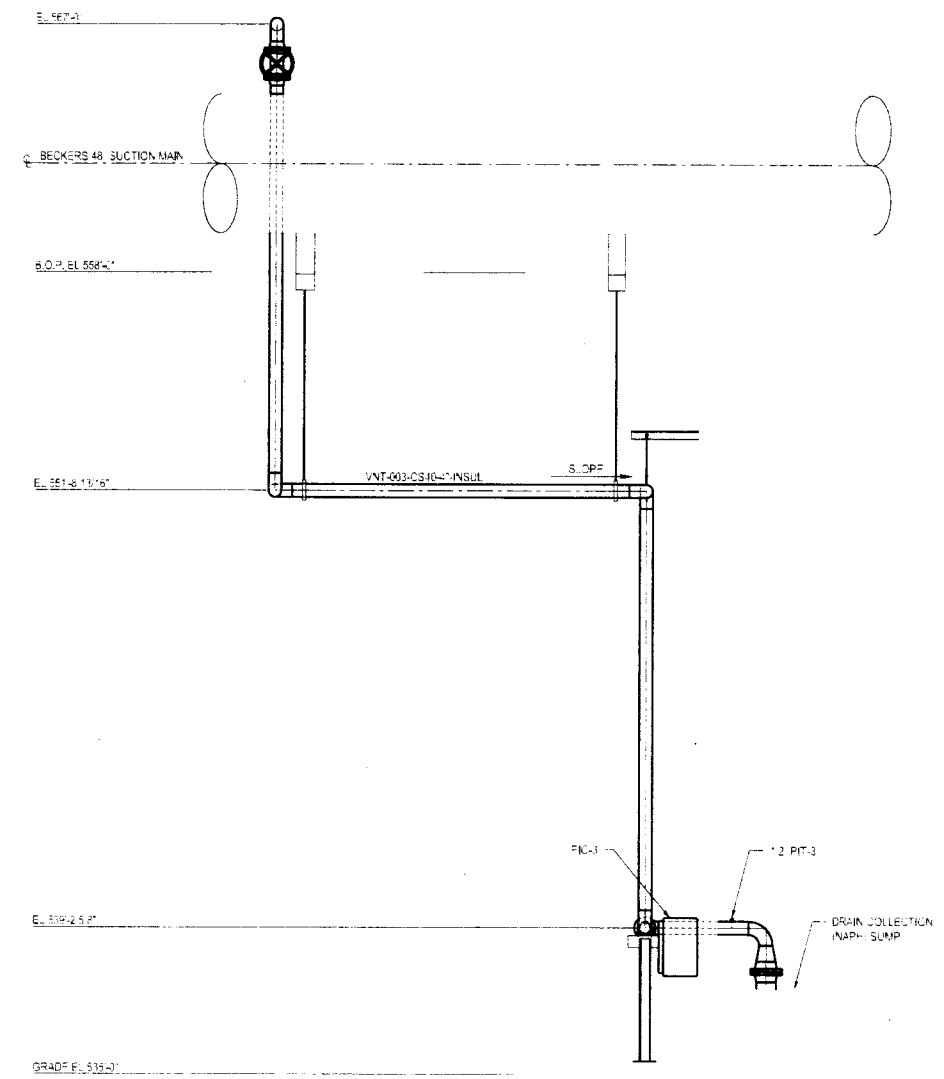

SECTION VIEW B (SEE PLAN2)
SCALE 1/2" = 1'-0"
LOOKING EAST

REFERENCE	DWG. NO.
N/S PIPE BRIDGE	723-3742-0200

REV	DESCRIPTION	CHECKED	DATE
1	ISSUED FOR REVIEW	MJS	01/31/17

SCHEM DATE	JUL 30 '16	DRAWN BY	DATE
		RJG	01/17/17
SCHEM NO.	36-51	CHECKED BY	DATE
		MJS	01/20/17
FILE NAME	ELEV2-1	APPROVED BY	DATE
		SW	

Borton Lawson
ENGINEERING
ARCHITECTURE
www.borton-lawson.com

ABC COKE
A Division of Drummond Company, Inc.
TARRANT, ALABAMA

ABC COKE	CUSTOMER PROJECT NO 2016-2379-003
TARRANT, ALABAMA	SCALE 1/2" = 1'-0"
VENT CAPTURE DRAIN COLLECTION (NAPH) SUMP SECTION VIEW A & B	ELEV2-1

REVISION A

NORTH

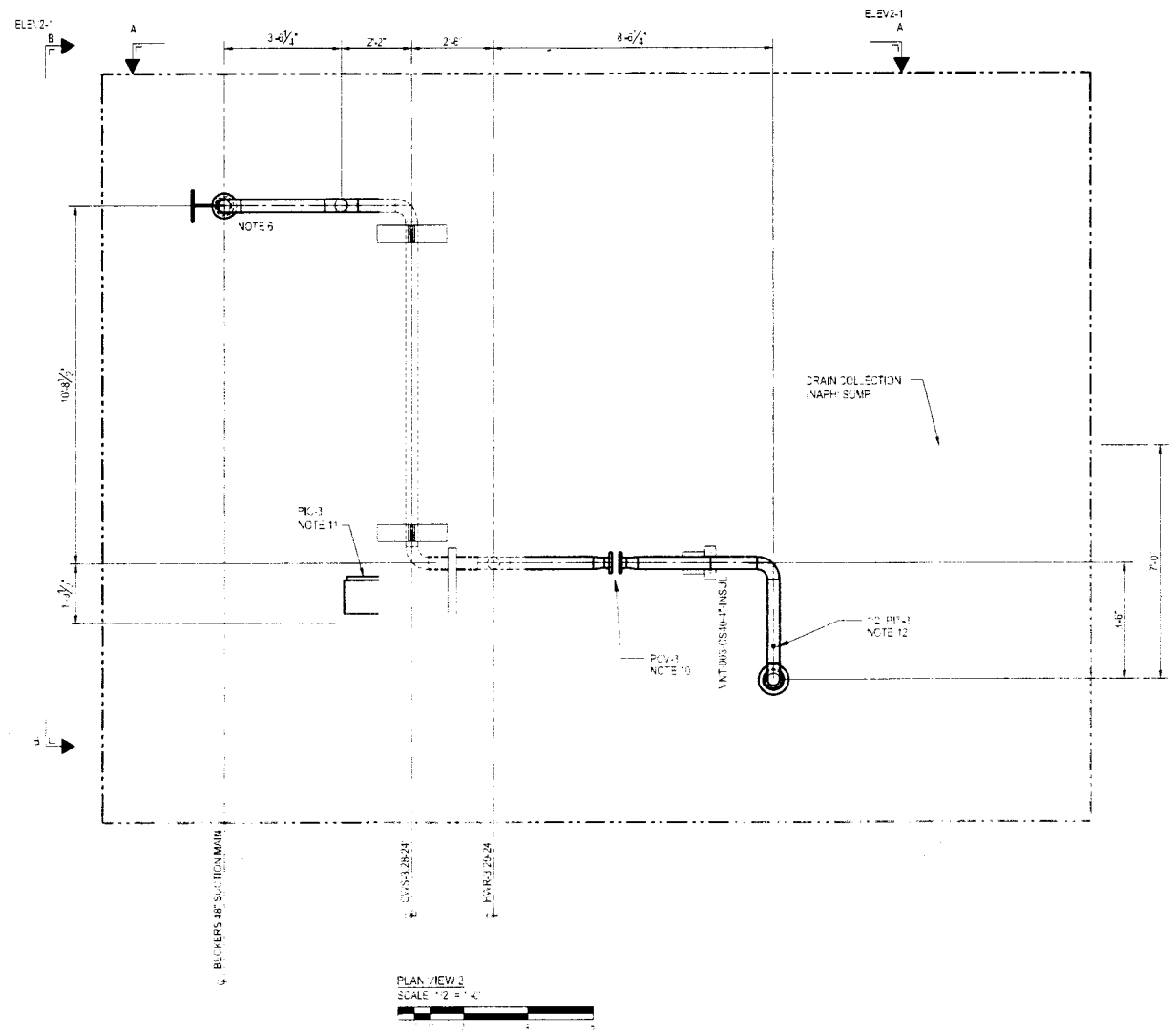

NOTES:

1. FABRICATION SHALL BE IN ACCORDANCE WITH ABC COKE PIPING STANDARDS.
2. 3" AND LARGER PIPE TO BE SEAMLESS OR WELDED ASTM A-53 GR.B STANDARD WEIGHT.
3. 3" AND LARGER FITTINGS TO BE SEAMLESS STEEL BUTT WELDING, ASTM A-234 GR. WPB, STANDARD WEIGHT.
4. 3" AND LARGER FLANGES TO BE 150# RF ANSI STANDARD FORGED STEEL WELD NECK OR SLIP-ON TYPE, ASTM A-181 GR. I.
5. PIPE SECTIONS SHALL BE SHOP PRIMED AND FINISHED COATED WITH INCURON INDURETHANE ENAMEL.
6. WALL THICKNESS MUST BE CHECKED BEFORE HOT TAPS. HOT TAP LOCATIONS SHOWN ON DRAWING MAY NEED TO BE CHANGED. USE SUPPORT WHERE NEEDED.
7. ALL LINES SLOPED BACKWARDS TO DRAIN COLLECTOR.
8. ALL UNUSED HOLES TO BE PLUGGED BEFORE START UP.
9. INCLUDE 1 1/2" THICK CALCIUM SILICATE PER ASTM SPECIFICATIONS C533-67 PLUS ALUMINUM JACKET. ALL LINES TO BE STEAM TRACED.
10. PICV-3 TO BE FISHER 9560 3 IN ACC BODY BUTTERFLY VALVE WITH 4 20-52 ACTUATOR SITTING UPRIGHT AND 3610J 3-15 PSI POSITIONER.
11. PIC-3 TO BE YOKOGAWA CONTROLLER UT-550 OR EQUIV. INCLUDE 30" x 30" x 12" DEEP SS SPE-THROUGH CONTROL PANEL AND LOCAL ALARM. ADD UNISTRUT [illegible] AS REQ'D FIELD.
12. PIT-3 TO BE YOKOGAWA STYLE 31 DP HARP MODEL EJA-110A STYLE 31 SUFFIX - EL3AB-NEA#TF/D1.
13. ALL DIMENSIONS TO BE FIELD CHECKED.

ABC COKE
A Division of Drummond Company, Inc.
TARRANT, ALABAMA

REV	DESCRIPTION	CHECKED	DATE
3			
2			
1	ISSUED FOR REVIEW	MJS	01/31/17

DRAWN BY	RJG 01/17/17
CHECKED BY	MJS 01/26/17
APPROVED BY	SW
FILE NAME	PLAN2

Borton Lawson
ENGINEERING ARCHITECTURE
www.borton-lawson.com

REFERENCE	DWG NO
N/S PIPE BRIDGE	123-3740-0200

ABC COKE
TARRANT, ALABAMA
VENT CAPTURE
DRAIN COLLECTION (NAPH) SUMP
PLAN VIEW 2

CUSTOMER PROJECT NO 2016-03/7-003
SCALE 1/2" = 1'-0"

PLAN2

REVISION A

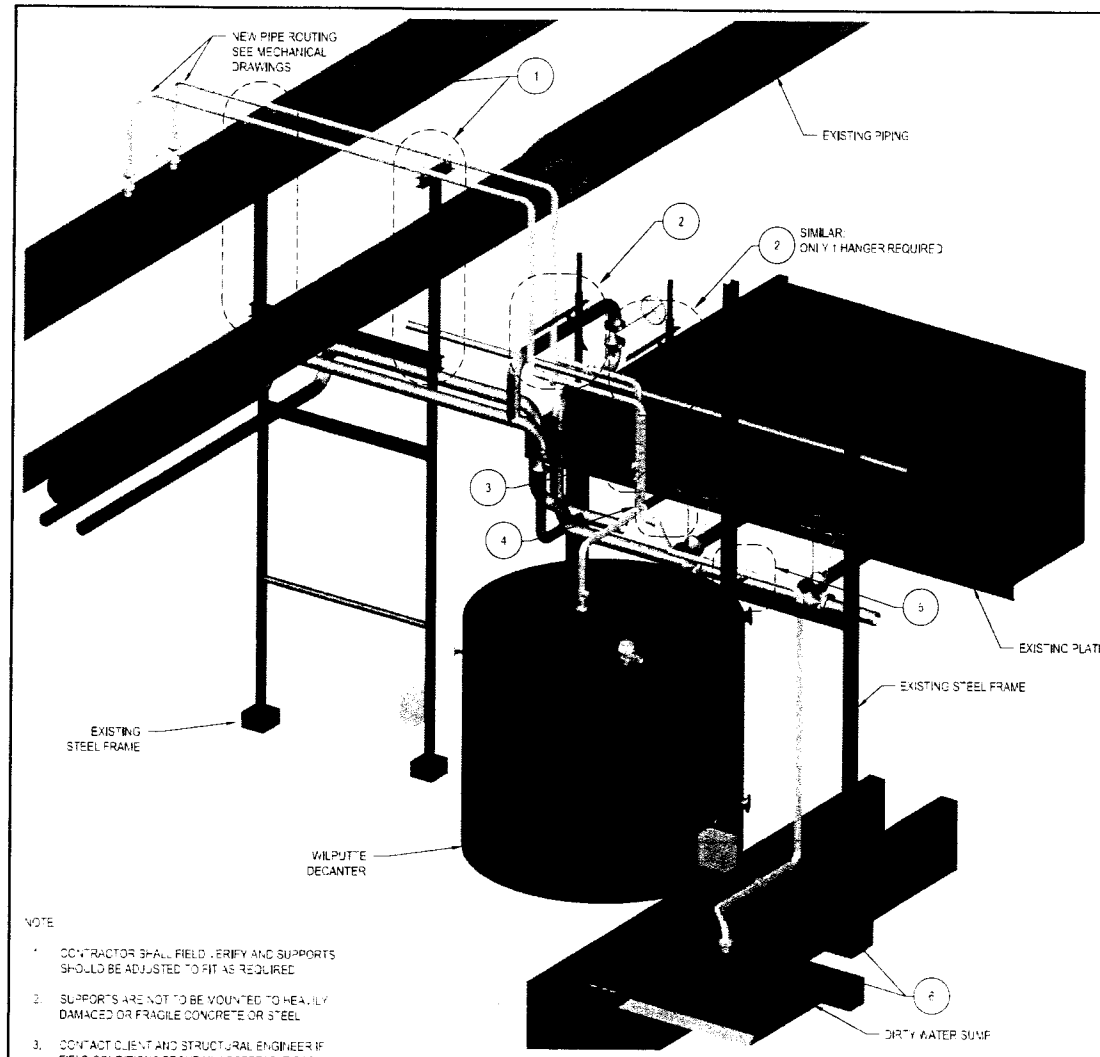

ISOMETRIC VIEW

NOTE

1. CONTRACTOR SHALL FIELD VERIFY AND SUPPORTS SHOULD BE ADJUSTED TO FIT AS REQUIRED
2. SUPPORTS ARE NOT TO BE MOUNTED TO HEAVILY DAMAGED OR FRAGILE CONCRETE OR STEEL
3. CONTACT CLIENT AND STRUCTURAL ENGINEER IF FIELD CONDITIONS PROVE UNACCEPTABLE FOR SUPPORTING NEW PIPE ROUTING OR SUPPORTS

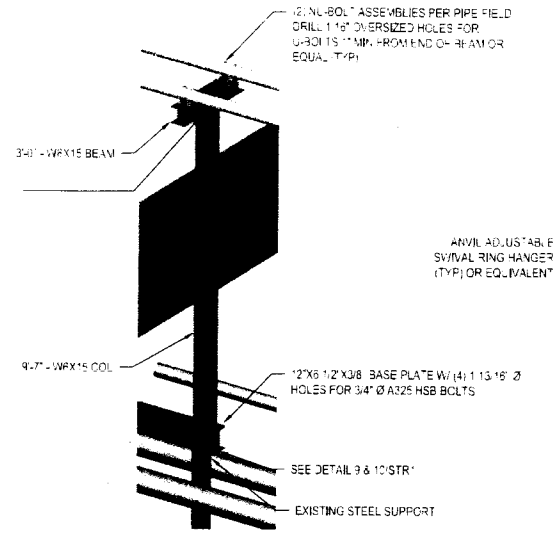

1 STR1 W6 SUPPORT
SCALE: 1/2" = 1'-0"

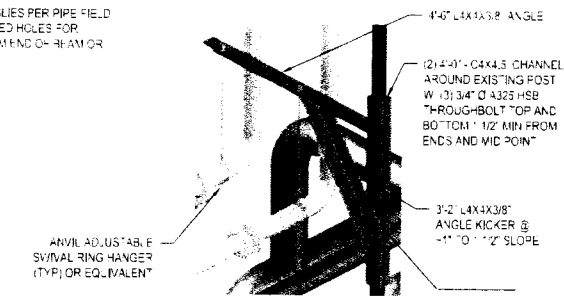

2 STR1 BRACKET HANGER SUPPORT
SCALE: 3/4" = 1'-0"

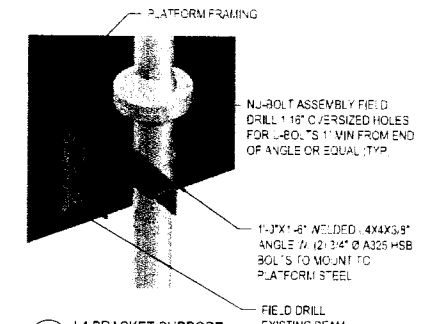

3 STR1 L4 BRACKET SUPPORT
SCALE: 1" = 1'-0"

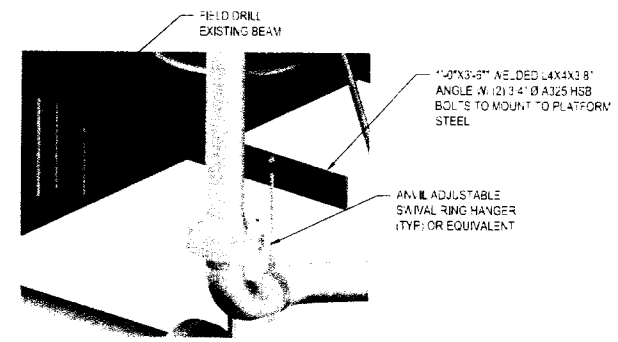

4 STR1 L4 HANGER SUPPORT
SCALE: 1" = 1'-0"

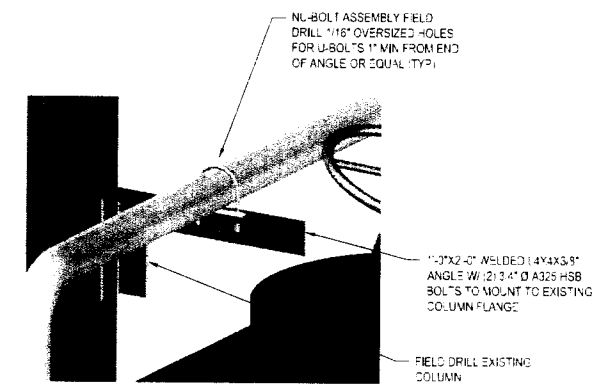

5 STR1 L4 BRACKET SUPPORT
SCALE: 1" = 1'-0"

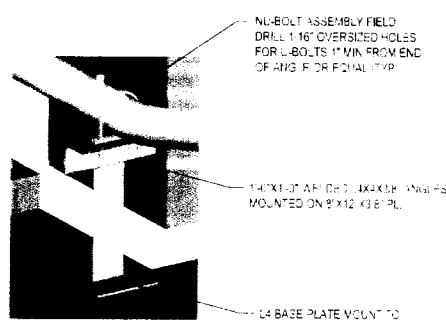

6 STR1 L4 STAND SUPPORT
SCALE: 1" = 1'-0"

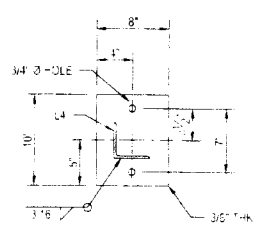

7 STR1 L4 BASE PLATE
SCALE: 1/2" = 1'-0"

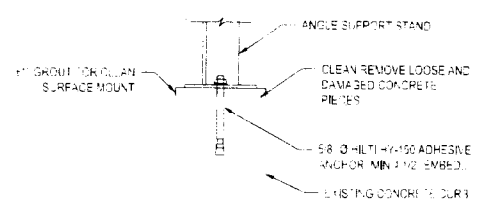

8 STR1 L4 BASE DETAIL
SCALE: 1/2" = 1'-0"

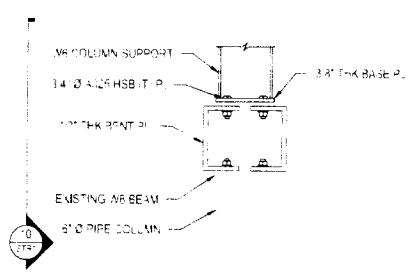

9 STR1 EXISTING BEAM REINFORCING DETAIL
SCALE: 1/2" = 1'-0"

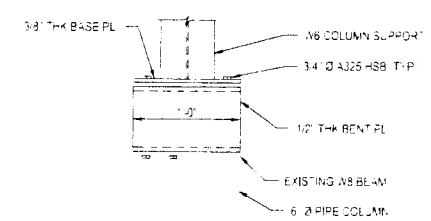

10 STR1 EXISTING BEAM REINFORCING DETAIL SECTION
SCALE: 1/2" = 1'-0"

REFERENCE	DWG. NO.
N/S PIPE BRIDGE	723-3740-1300
PROCESS WATER DECANTER TANK (WILPUTTE)	723-3630-9280
PIPING LIGHT OIL RECOVERY UNIT MISC SECTS	723-3640-9267
PIPING LIGHT OIL RECOVERY UNIT	723-3640-9266

REV	DESCRIPTION	CHECKED	DATE
A	ISSUED FOR REVIEW	GMM	01/31/17

DRAWN BY	JCP	01/31/17
CHECKED BY	GMM	01/31/17
FILE NAME	STR1-1	
APPROVED BY	SW	

Borton Lawson
ENGINEERING
ARCHITECTURE
www.borton-lawson.com

ABC COKE
A Division of Drummond Company, Inc.
TARRANT, ALABAMA

ABC COKE
TARRANT, ALABAMA

STRUCTURAL VIEWS AND DETAILS AREA 1 WILPUTTE DECANTER & DIRTY WATER SUMP SECTION VIEW A

CUSTOMER PROJECT NO. 2016-2379-003
SCALE: AS NOTED

STR1-1

REVISION A

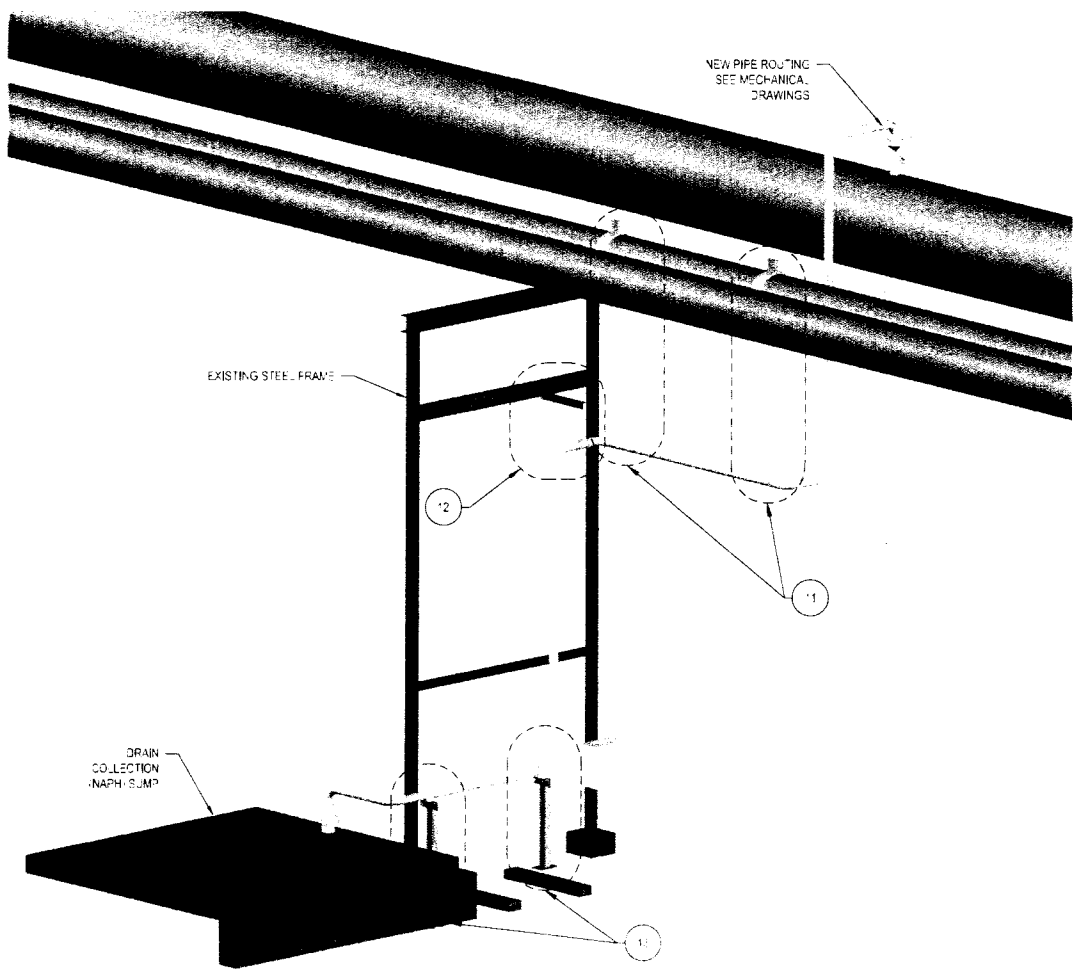

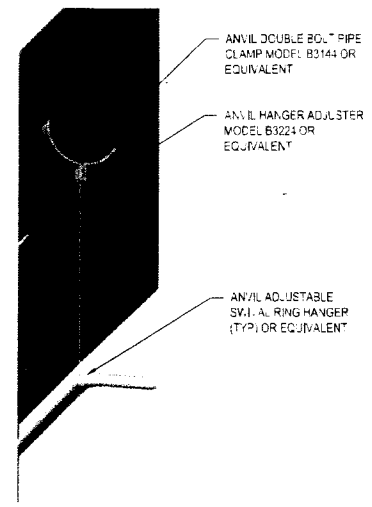

11 BRACKET HANGER SUPPORT
STR2 SCALE: NTS

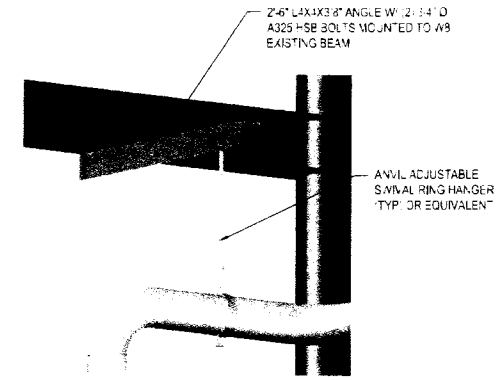

12 L4 HANGER SUPPORT
STR2 SCALE: 1"=1'-0"

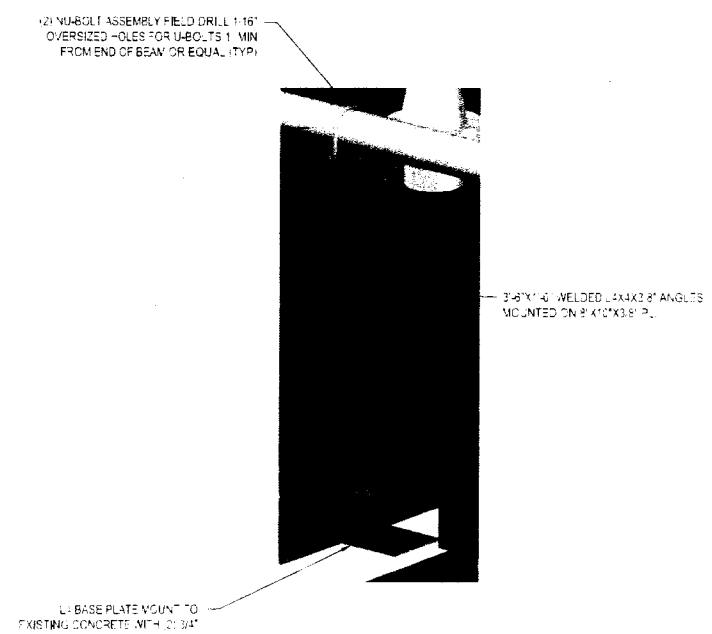

13 L4 STAND SUPPORT
STR2 SCALE: NTS

NOTE

1. ALL DIMENSIONS WILL BE FIELD VERIFIED AND SUPPORTS SHOULD BE ADJUSTED TO FIT AS REQUIRED.
2. SUPPORTS ARE NOT TO BE MOUNTED TO HEAVILY DAMAGED OR FRAGILE CONCRETE OR STEEL.
3. CONTACT CLIENT AND STRUCTURAL ENGINEER IF FIELD CONDITIONS PROVE UNACCEPTABLE FOR SUPPORTING NEW PIPE ROUTING OR SUPPORTS.

STRUCTURAL STEEL

1. DETAIL, FABRICATE AND ERECT STRUCTURAL STEEL IN ACCORDANCE WITH THE LATEST EDITION OF THE AMERICAN INSTITUTE OF STEEL CONSTRUCTION (AISC) SPECIFICATIONS AND CODES.
2. STEEL MEMBERS SHALL BE:

STRUCTURAL STEEL W & WT SHAPES	ASTM A992 GRADE 50 (FY = 50 KSI)
STRUCTURAL STEEL C-CHANNELS, ANGLES, BARS, PLATES	ASTM A36
STEEL BOLTS	ASTM A325 TYPE N UNLESS NOTED OTHERWISE (U.N.O.) WHERE A-325 BOLTS IS INDICATED PROVIDE SLIP CRITICAL BOLTED CONNECTIONS

3. WELD OR BOLT SHOP CONNECTIONS. FOR FIELD CONNECTIONS USE 3/4" DIAMETER HIGH STRENGTH INSTALLED TO THE "SNUG TIGHT" CONDITION DESCRIBED IN AISC SPECIFICATIONS FOR STRUCTURAL JOINTS, USING ASTM A325 OR A490 BOLTS. FIELD WELDING WILL BE PERMITTED WHERE SPECIFICALLY CALLED FOR ON THE DRAWINGS.
4. CONNECTIONS NOT SHOWN SHALL BE DESIGNED TO SUPPORT THE BEAM REACTIONS SPECIFIED ON THE DRAWINGS. IF NO REACTIONS ARE PROVIDED, CONNECTIONS SHALL BE DESIGNED TO SUPPORT 1/2 THE TOTAL UNIFORM LOAD CAPACITY FOR THE PARTICULAR BEAM AND SPAN AS LISTED IN THE AISC MANUAL OF STEEL CONSTRUCTION.
5. PERFORM WELDING IN ACCORDANCE WITH THE AMERICAN WELDING SOCIETY "STRUCTURAL WELDING CODE" CONFORM TO AWS D1.1 E70 ELECTRODES.
6. NON-SHRINK GROUT - PRE-MIXED, NON-METALLIC, CEMENT-BASED GROUT MEETING THE REQUIREMENTS OF ASTM C827, ASTM C109 & CRD C-621 WITH A MINIMUM COMPRESSIVE STRENGTH OF [illegible] PSI AT 28 DAYS.
7. PROVIDE SHORING/BRACING FOR A SAFE STRUCTURE UNTIL ALL FINAL CONNECTIONS ARE MADE. DESIGN SHALL BE BY STEEL ERECTOR.
8. PROVIDE MISCELLANEOUS PLATES, ANGLES AND ANCHORS AS SHOWN OR NOTED ON THE STRUCTURAL DRAWINGS.
9. ALL CUTTING AND BLOCKING OF STEEL SHALL BE SHOWN ON SHOP DRAWINGS AND PERFORMED IN SHOP. FIELD BURNING IS NOT ALLOWED.
10. STRUCTURAL MEMBERS TO BE SHOP PRIMED AND FINISHED COATED WITH INDURON INDURETHANE ENAMEL.
11. ALL HANGERS TO BE STAINLESS STEEL.

ABC COKE
A Division of Drummond Company, Inc.
TARRANT, ALABAMA

N/S PIPE BRIDGE	723-3740-9300
PROCESS WATER DECANTER TANK (WILPUTTE)	723-3630-9280
PIPING LIGHT OIL RECOVERY UNIT MISC SECTS	723-3640-9267
PIPING LIGHT OIL RECOVERY UNIT	723-3640-9266
REFERENCE	DWG NO

REV	DESCRIPTION	CHECKED	DATE
A	ISSUED FOR REVIEW	GMM	01/31/17

DRAWN BY	JCP	01/31/17
CHECKED BY	GMM	01/31/17
FILE NAME	STR2-1	
APPROVED BY	SW	

Borton Lawson
ENGINEERING ARCHITECTURE
www.borton-lawson.com

ABC COKE
TARRANT, ALABAMA
STRUCTURAL VIEWS AND DETAILS AREA 2
DRAIN COLLECTION (NAPH) SUMP
SECTION VIEW A

CUSTOMER PROJECT NO 2016-2379-003
SCALE AS NOTED

STR2-1

REVISION A

NORTH

BILL OF MATERIALS			LENGTH		WT
MARK	QUAN	DESCRIPTION	FT	INS	

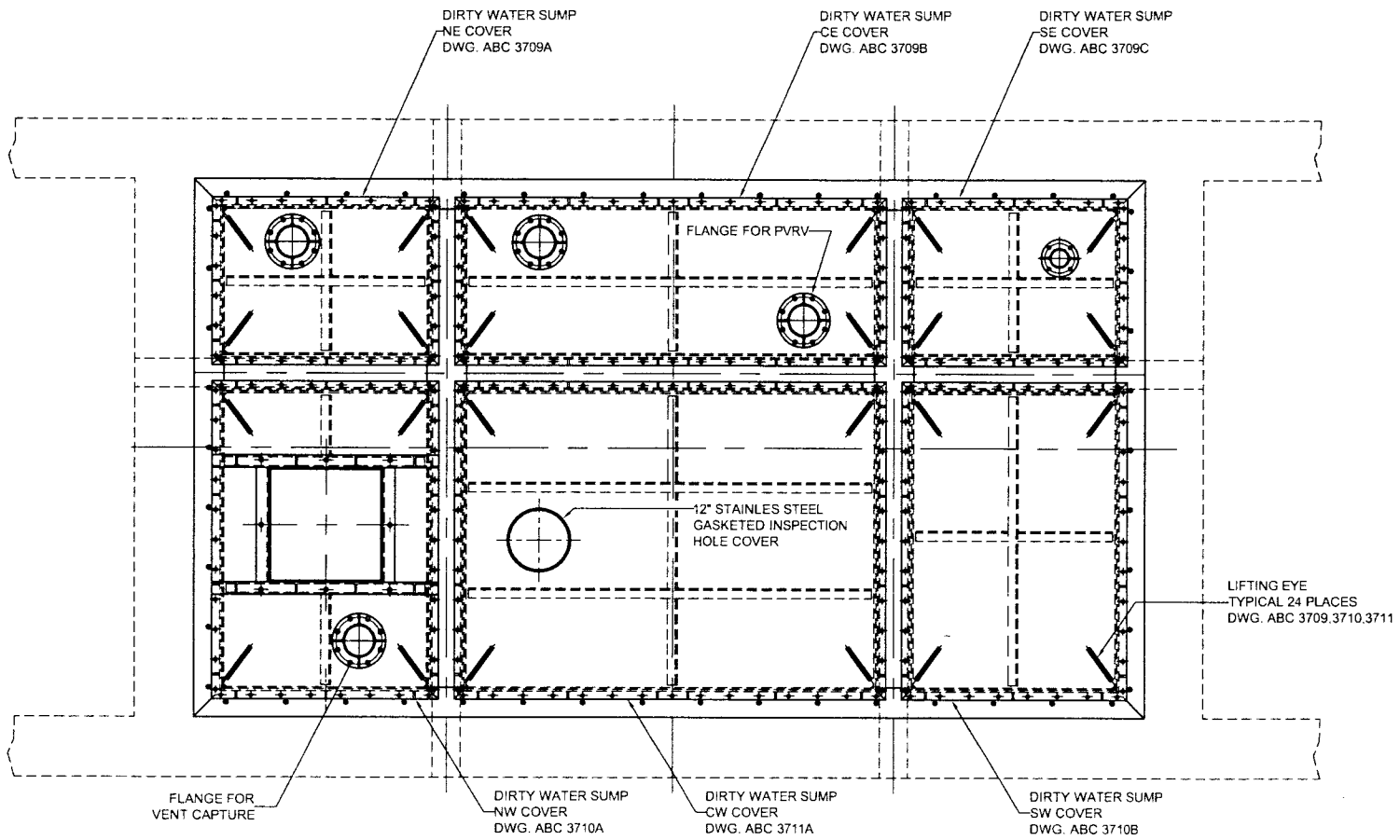

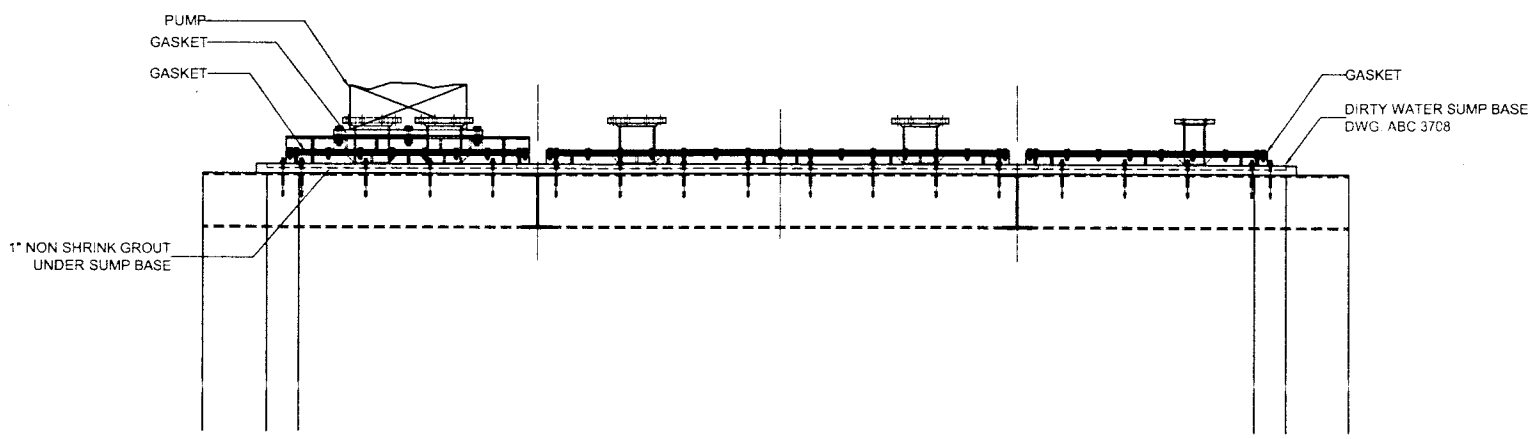

DRAWING NO.	DESCRIPTION
REFERENCES	

NO.	REVISIONS	MADE BY	CHECK BY	DATE	NO.	REVISIONS	MADE BY	CHECK BY	DATE

THIS PRINT AND ALL INFORMATION THEREON IS THE PROPERTY OF ALABAMA BY-PRODUCTS CORPORATION and is confidential and must not be made public or copied unless so authorized by them and is subject to return upon demand.

	BY	DATE
DRAWN	SMK	8-22-16
CHECKED		
APPROVED		
APPROVED		
ISSUED		

ALABAMA BY-PRODUCTS CORPORATION
FOUNDRY COKE • COAL • COAL CHEMICALS
COKE OVEN AND BY-PRODUCTS DIVISION
P. O. BOX 6507 – TARRANT BRANCH
BIRMINGHAM, ALABAMA 35217

DIRTY WATER SUMP
GEN ARRGT

DATE: 8-22-2016
SCALE: 1:16

ABC 3707

BILL OF MATERIALS			LENGTH		WT
MARK	QUAN	DESCRIPTION	FT	INS	

NOTES:
1. ALL JOINTS TO BE VEED AND WELDED AT 100%.
2. ALL MATERIAL TO BE 316 STAINLESS.
2. BASE MUST BE FLAT AND STRAIGHT. NO WARPING!
4. REMOVE ALL BURRS AND SHARP EDGES.
5. ANGLES MUST BE FULL WELDED AND GAS TIGHT.

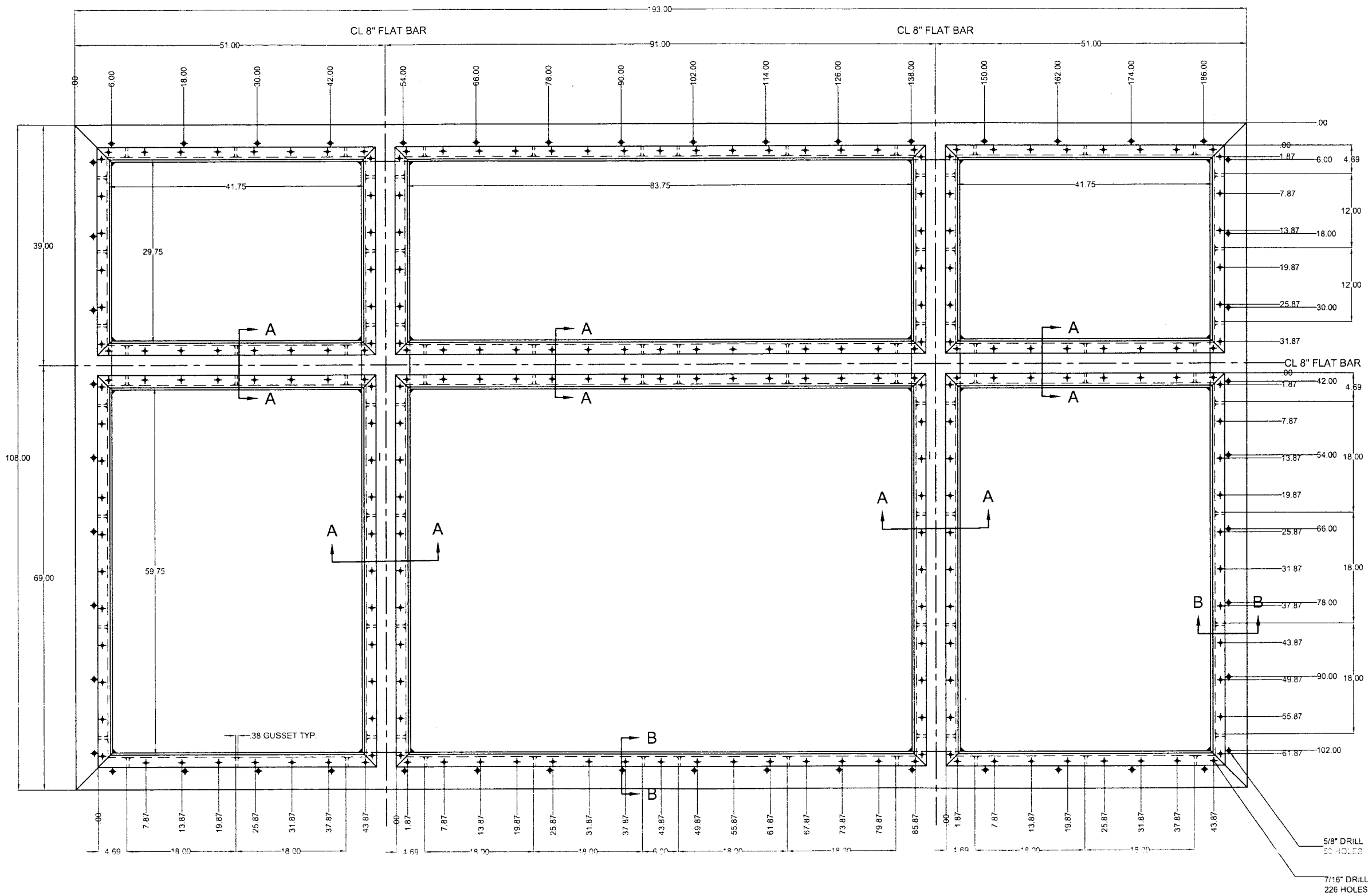

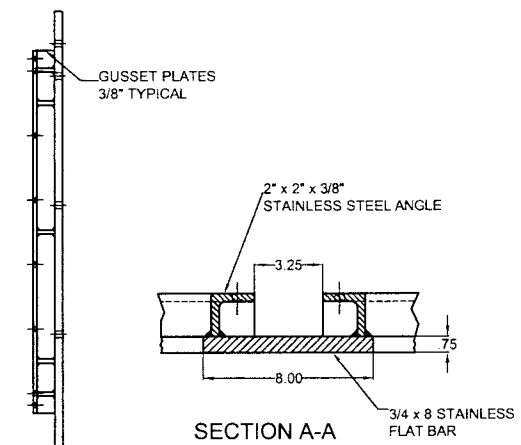

SECTION A-A

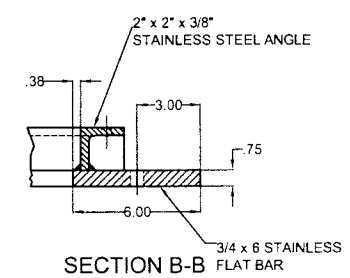

SECTION B-B

DRAWING NO.	DESCRIPTION

THIS PRINT AND ALL INFORMATION THEREON IS THE PROPERTY OF ALABAMA BY-PRODUCTS CORPORATION and is confidential and must not be made public or copied unless so authorized by them and is subject to return upon demand.

	BY	DATE
DRAWN	SMK	8-23-16
CHECKED		
APPROVED		
APPROVED		

ALABAMA BY-PRODUCTS CORPORATION
FOUNDRY COKE • COAL • COAL CHEMICALS
COKE OVEN AND BY-PRODUCTS DIVISION
P. O. BOX 6507 – TARRANT BRANCH

DIRTY WATER SUMP
BASE

DATE: 8-23-16
SCALE: 1/8

ABC 3708

BILL OF MATERIALS			LENGTH		WT
MARK	QUAN	DESCRIPTION	FT	INS	

NOTES:
1. ALL MATERIAL TO BE 316 STAINLESS UNLESS NOTED.
2. COVER MUST BE FLAT AND STRAIGHT. NO WARPING!
3. REMOVE ALL BURRS AND SHARP EDGES.
4. SUPPORT ANGLES UNDER COVER MAY BE SKIP WELDED.
5. PIPE PROTRUSIONS MUST BE 100% WELDED BOTH SIDES TO BE GAS TIGHT.

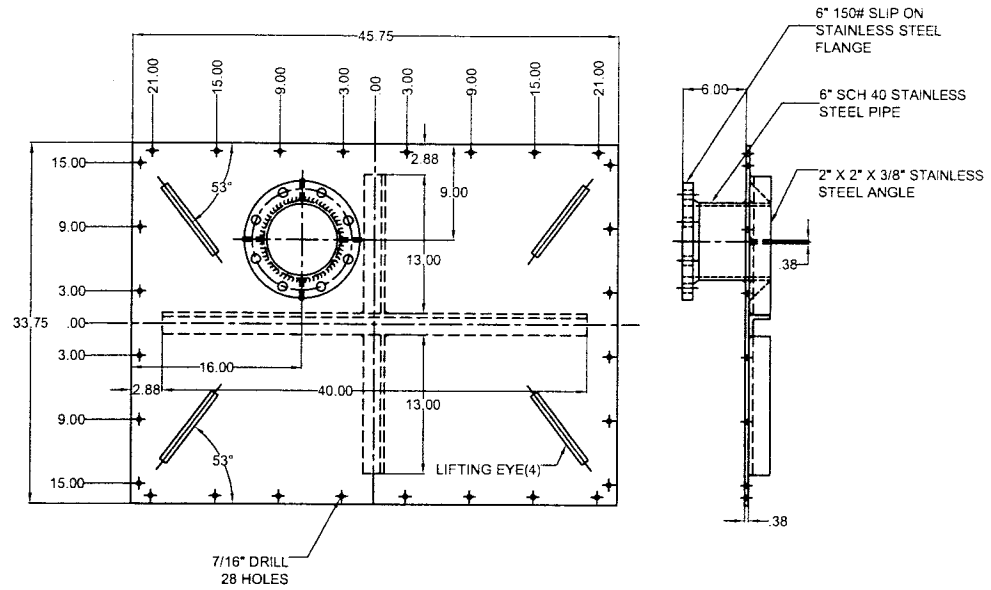

NW COVER
QTY: 1
MATERIAL: 316 STAINLESS

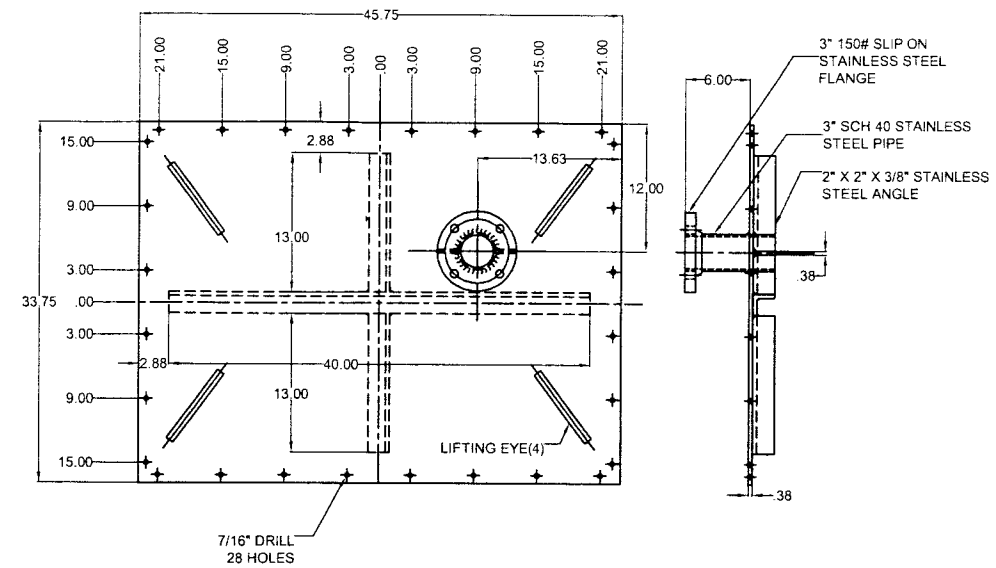

SW COVER
QTY: 1
MATERIAL: 316 STAINLESS

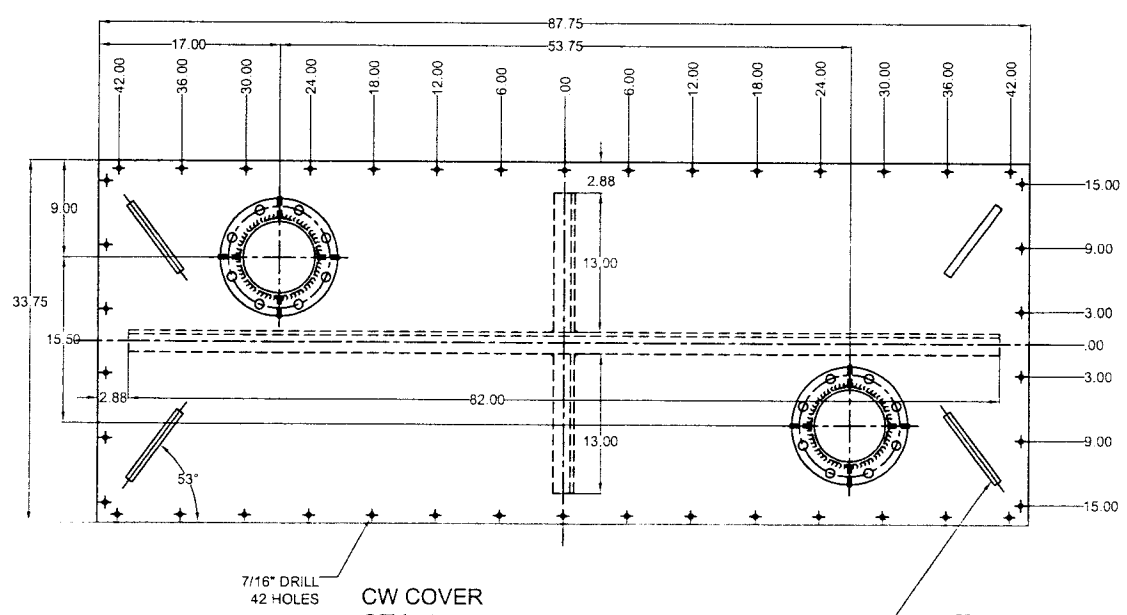

CW COVER
QTY: 1
MATERIAL: 316 STAINLESS

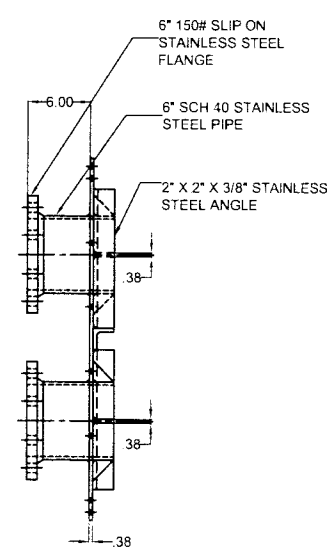

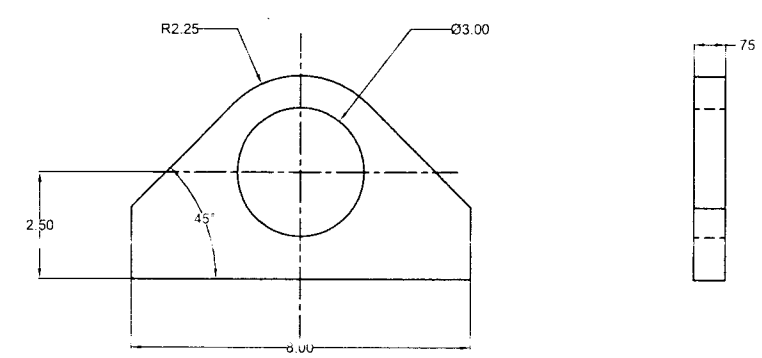

LIFTING EYE
QTY: 12
MATERIAL: 316 STAINLESS

DRAWING NO.	DESCRIPTION
REFERENCES	

NO.	REVISIONS	MADE BY	CHECK BY	DATE	NO.	REVISIONS	MADE BY	CHECK BY	DATE

THIS PRINT AND ALL INFORMATION THEREON IS THE PROPERTY OF ALABAMA BY-PRODUCTS CORPORATION and is confidential and must not be made public or copied unless as authorized by them and is subject to return upon demand.

	BY	DATE
DRAWN	SMK	8-23-16
CHECKED		
APPROVED		
APPROVED		
ISSUED		

ALABAMA BY-PRODUCTS CORPORATION
FOUNDRY COKE • COAL • COAL CHEMICALS
COKE OVEN AND BY-PRODUCTS DIVISION
P. O. BOX 6507 – TARRANT BRANCH
BIRMINGHAM, ALABAMA 35217

DIRTY WATER SUMP
COVER DETAILS

DATE: 8-23-16
SCALE: 1/8

ABC 3709

BILL OF MATERIALS					
MARK	QUAN	DESCRIPTION	LENGTH FT	LENGTH INS	WT

NOTES:
1. ALL MATERIAL TO BE 316 STAINLESS UNLESS NOTED.
2. COVER MUST BE FLAT AND STRAIGHT. NO WARPING!
3. REMOVE ALL BURRS AND SHARP EDGES.
4. SUPPORT ANGLES UNDER COVER MAY BE SKIP WELDED.
5. PIPE PROTRUSIONS MUST BE 100% WELDED BOTH SIDES TO BE GAS TIGHT.
6. PUMP MOUNT BASE TO BE100% WELDED BOTH SIDES TO BE GAS TIGHT.

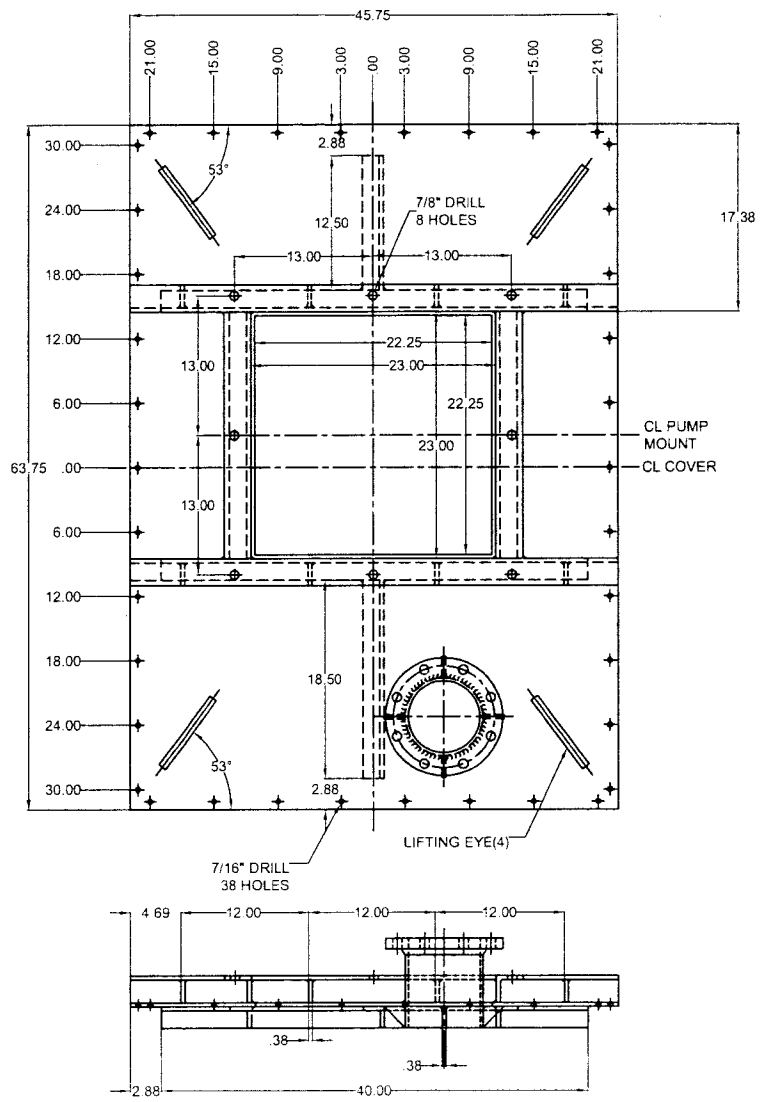

NE COVER
QTY: 1
MATERIAL: 316 STAINLESS

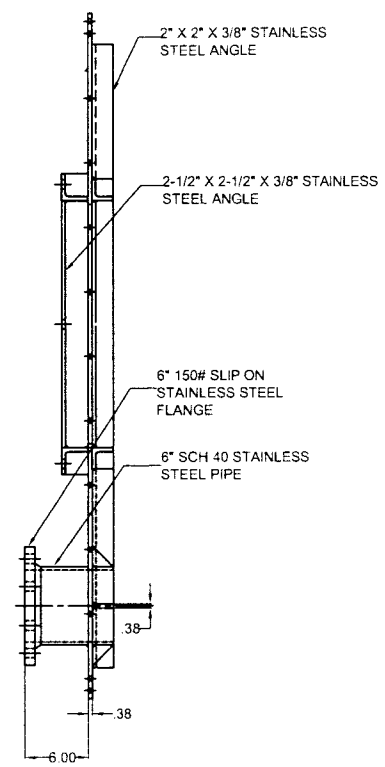

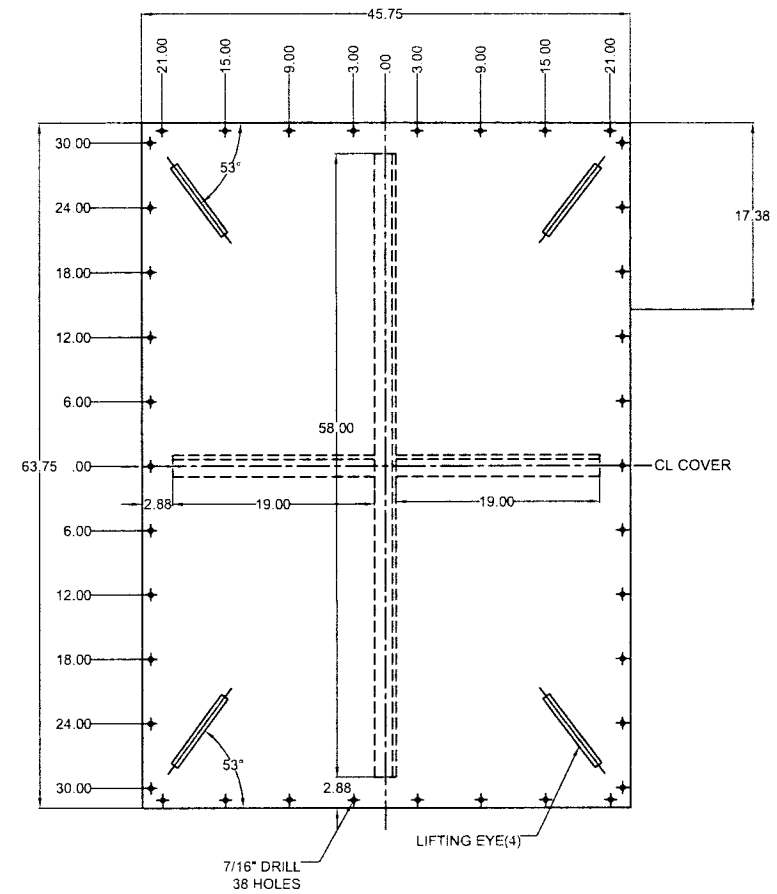

SE COVER
QTY: 1
MATERIAL: 316 STAINLESS

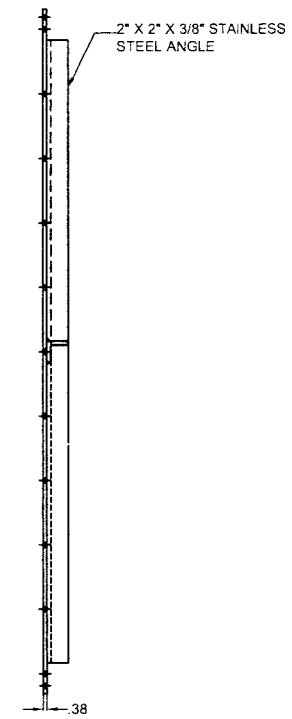

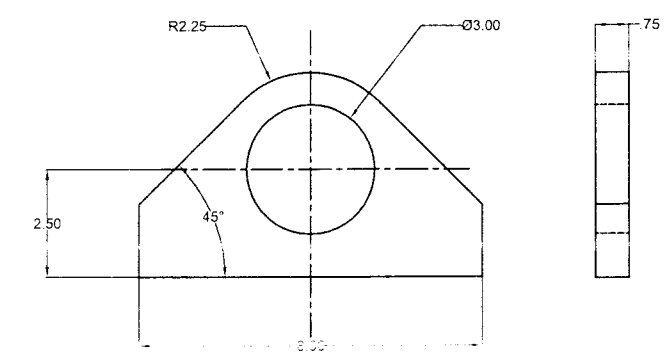

LIFTING EYE
QTY: 8
MATERIAL: 316 STAINLESS

DRAWING NO.	DESCRIPTION

THIS PRINT AND ALL INFORMATION THEREON IS THE PROPERTY OF ALABAMA BY-PRODUCTS CORPORATION and is confidential and must not be made public or copied unless so authorized by them and is subject to return upon demand.

	BY	DATE
DRAWN	SMK	8-25-16
CHECKED		
APPROVED		
APPROVED		

ALABAMA BY-PRODUCTS CORPORATION
FOUNDRY COKE • COAL • COAL CHEMICALS
COKE OVEN AND BY-PRODUCTS DIVISION
P. O. BOX 6507 – TARRANT BRANCH

DIRTY WATER SUMP
COVER DETAILS

DATE: 8-25-16
SCALE: 1/8

ABC 3710

BILL OF MATERIALS			LENGTH		WT
MARK	QUAN	DESCRIPTION	FT	INS	#

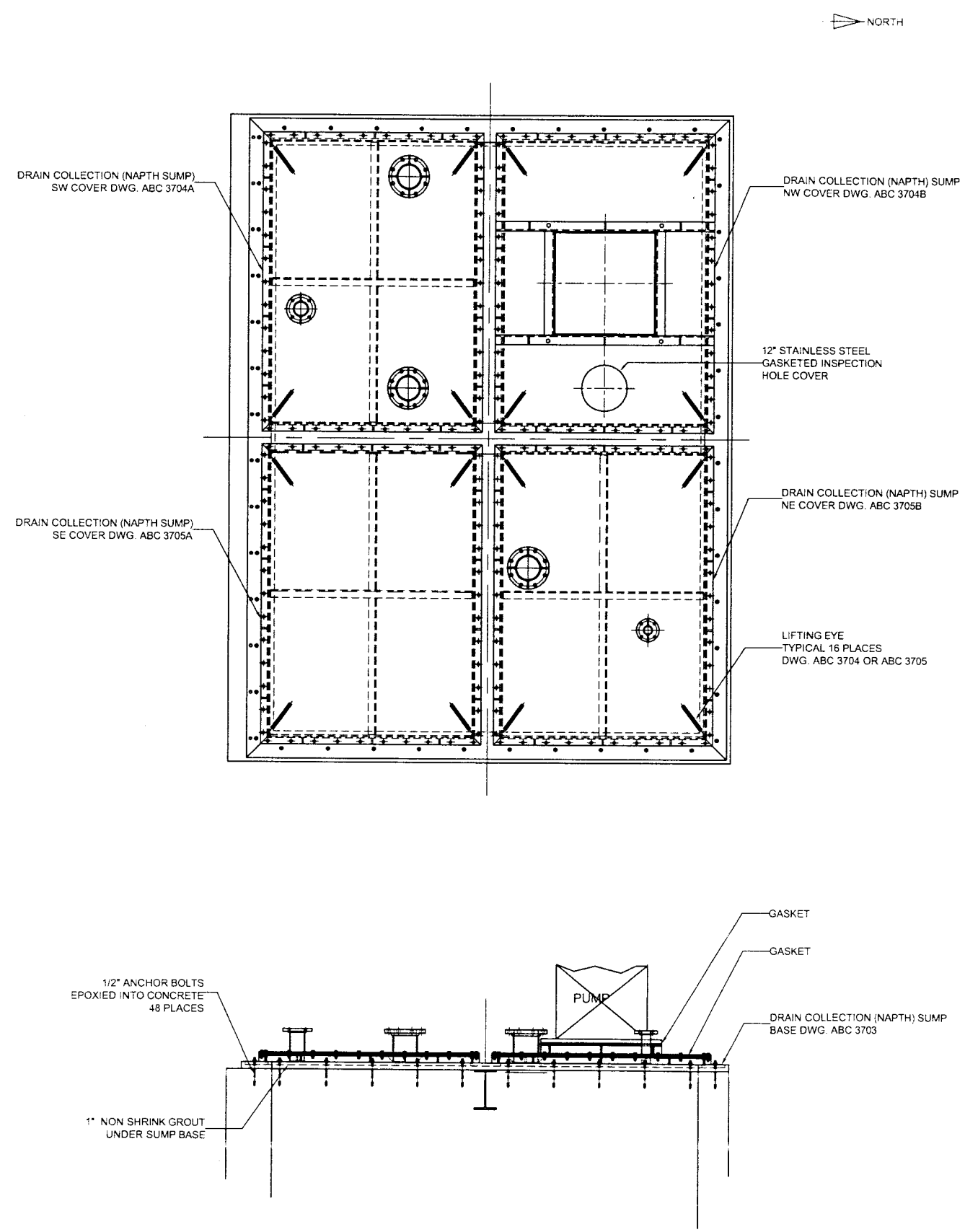

DRAWING NO.	DESCRIPTION

REFERENCES

NO.	REVISIONS	MADE BY	CHECK BY	DATE	NO.	REVISIONS	MADE BY	CHECK BY	DATE

THIS PRINT AND ALL INFORMATION THEREON IS THE PROPERTY OF ALABAMA BY-PRODUCTS CORPORATION and is confidential and must not be made public or copied unless so authorized by them and is subject to return upon demand.

	BY	DATE
DRAWN		
CHECKED		
APPROVED		
APPROVED		
ISSUED		

ALABAMA BY-PRODUCTS CORPORATION
FOUNDRY COKE • COAL • COAL CHEMICALS
COKE OVEN AND BY-PRODUCTS DIVISION
P. O. BOX 6507 — TARRANT BRANCH
BIRMINGHAM, ALABAMA 35217

DRAIN COLLECTION (NAPTH) SUMP GEN ARRGT

DATE: 7-15-2016
SCALE: 1/16

ABC 3702

BILL OF MATERIALS			LENGTH		WT
MARK	QUAN	DESCRIPTION	FT	INS	

NOTES:
1. ALL JOINTS TO BE VEED AND WELDED AT 100%.
2. ALL MATERIAL TO BE 316 STAINLESS.
2. BASE MUST BE FLAT AND STRAIGHT. NO WARPING!
4. REMOVE ALL BURRS AND SHARP EDGES.
5. ANGLES MUST BE FULL WELDED AND GAS TIGHT.

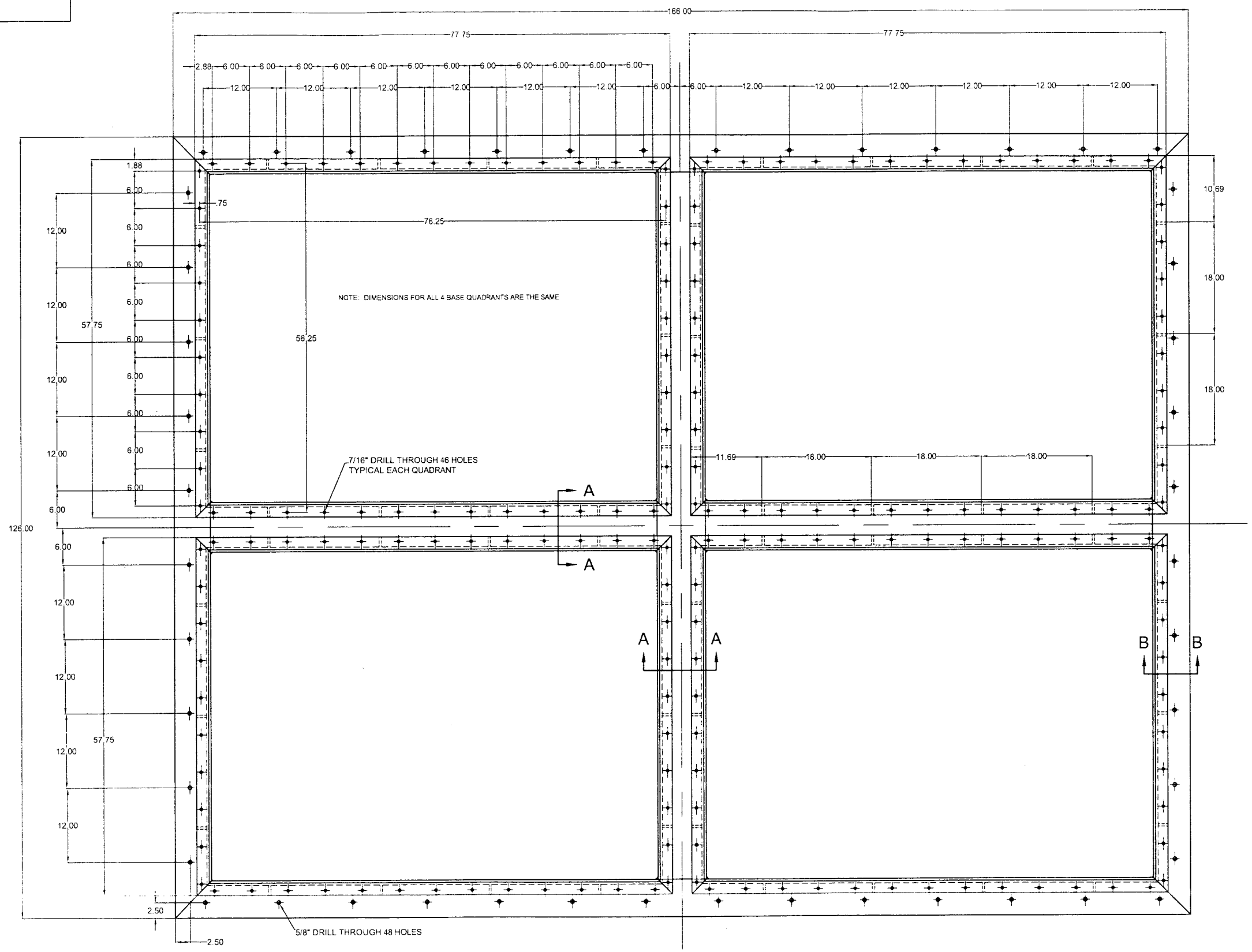

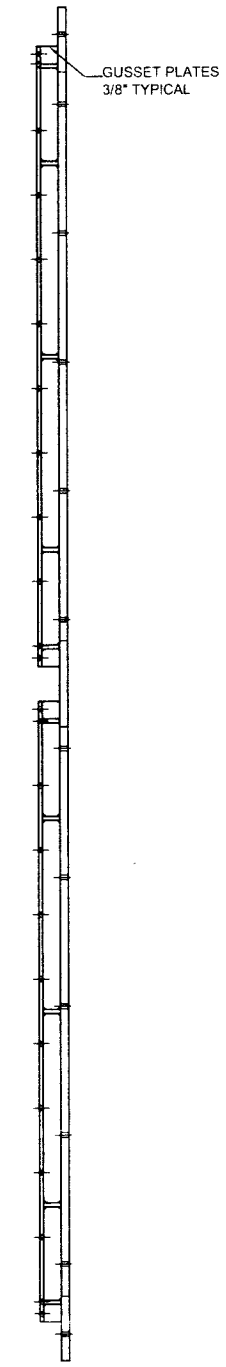

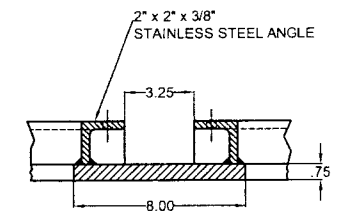

SECTION A-A

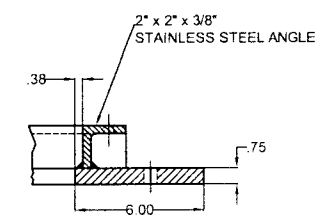

SECTION B-B

DRAWING NO.	DESCRIPTION

THIS PRINT AND ALL INFORMATION THEREON IS THE PROPERTY OF ALABAMA BY-PRODUCTS CORPORATION and is confidential and must not be made public or copied unless as authorized by them and is subject to return upon demand.

	BY	DATE
DRAWN	SMK	7-18-16
CHECKED		
APPROVED		
APPROVED		

ALABAMA BY-PRODUCTS CORPORATION
FOUNDRY COKE • COAL • COAL CHEMICALS
COKE OVEN AND BY-PRODUCTS DIVISION
P. O. BOX 8507 — TARRANT BRANCH

DRAIN COLLECTION (NAPTH) SUMP BASE

DATE: 7-18-16
SCALE: 1/8

ABC 3703

BILL OF MATERIALS			LENGTH		WT
MARK	QUAN	DESCRIPTION	FT	INS	

NOTES:
1. ALL PROTRUSIONS TO BE FULL WELD ON BOTH SIDES OF 3/8" PLATE
2. ANGLE ON TOP SIDE OF NW COVER TO BE FULL WELD ALSO.
3. ANGLE ON NW COVER TOP MUST BE FLAT AND STRAIGHT.
4. STAINLESS MANHOLE COVER TO BE FURNISHED BY ABC COKE.
5. COVERS MUST BE FLAT AFTER WELDING. NO WARPING!
6. REMOVE ALL SHARP CORNERS AND EDGES.
7. ANGLE BRACING UNDER COVER MAY BE SKIP WELDED.

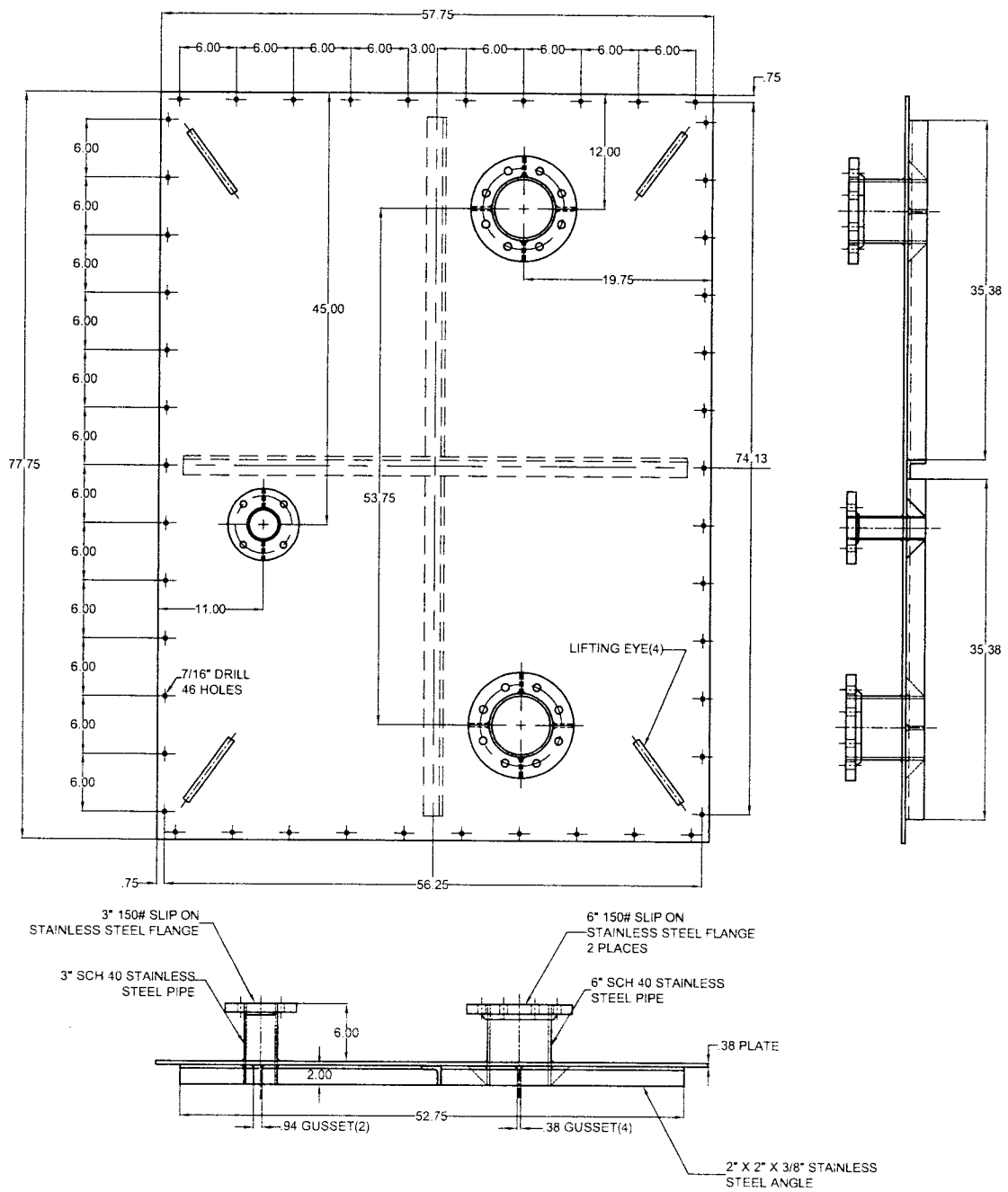

SW COVER

QTY. 1

MATERIAL: 316 STAINLESS

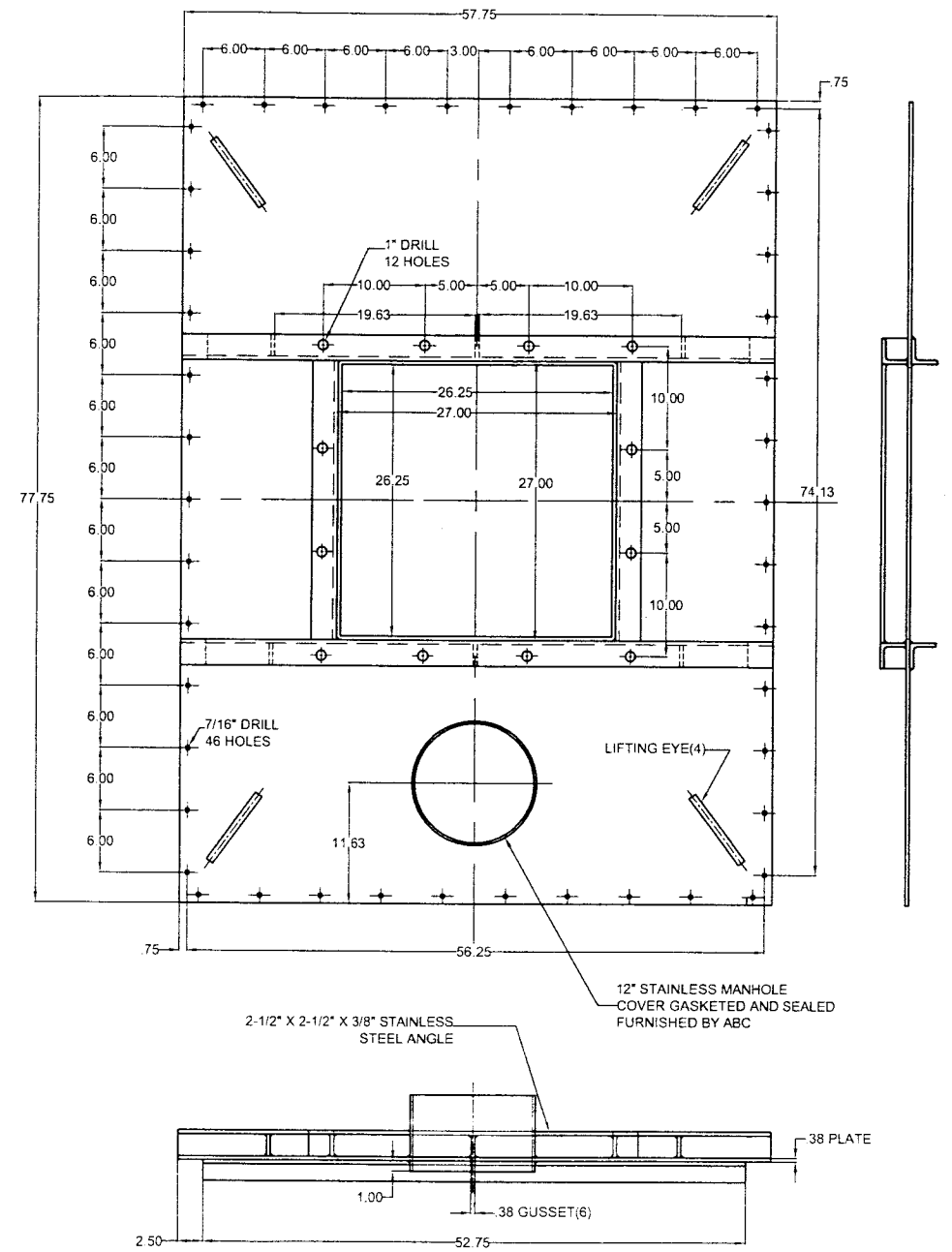

NW COVER

QTY: 1

MATERIAL: 316 STAINLESS

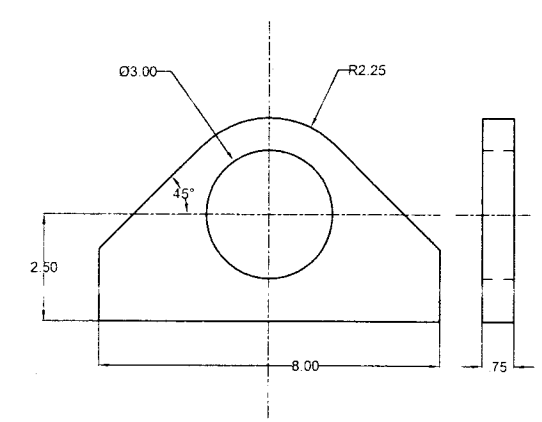

LIFTING EYE

QTY: 8

MATERIAL: 316 STAINLESS

DRAWING NO.	DESCRIPTION
REFERENCES	

NO.	REVISIONS	MADE BY	CHECK BY	DATE	NO.	REVISIONS	MADE BY	CHECK BY	DATE

THIS PRINT AND ALL INFORMATION THEREON IS THE PROPERTY OF ALABAMA BY-PRODUCTS CORPORATION and is confidential and must not be made public or copied unless as authorized by them and is subject to return upon demand.

	BY	DATE
DRAWN	SMK	7-19-16
CHECKED		
APPROVED		
APPROVED		
ISSUED		

ALABAMA BY-PRODUCTS CORPORATION
FOUNDRY COKE • COAL • COAL CHEMICALS
COKE OVEN AND BY-PRODUCTS DIVISION
P. O. BOX 6507 – TARRANT BRANCH
BIRMINGHAM, ALABAMA 35217

DRAIN COLLECTION(NAPTH) SUMP COVERS

DATE: 7-19-2016
SCALE: 1/8

ABC 3704

BILL OF MATERIALS			LENGTH		WT
MARK	QUAN	DESCRIPTION	FT	INS	

NOTES:
1. ALL PROTRUSIONS TO BE FULL WELD ON BOTH SIDES OF 3/8" PLATE.
2. COVERS MUST BE FLAT AND STRAIGHT AFTER WELDING. NO WARPING!
3. REMOVE ALL SHARP CORNERS ADM EDGES.
4. ANGLE BRACING UNDER COVER MAY BE SKIP WELDED.

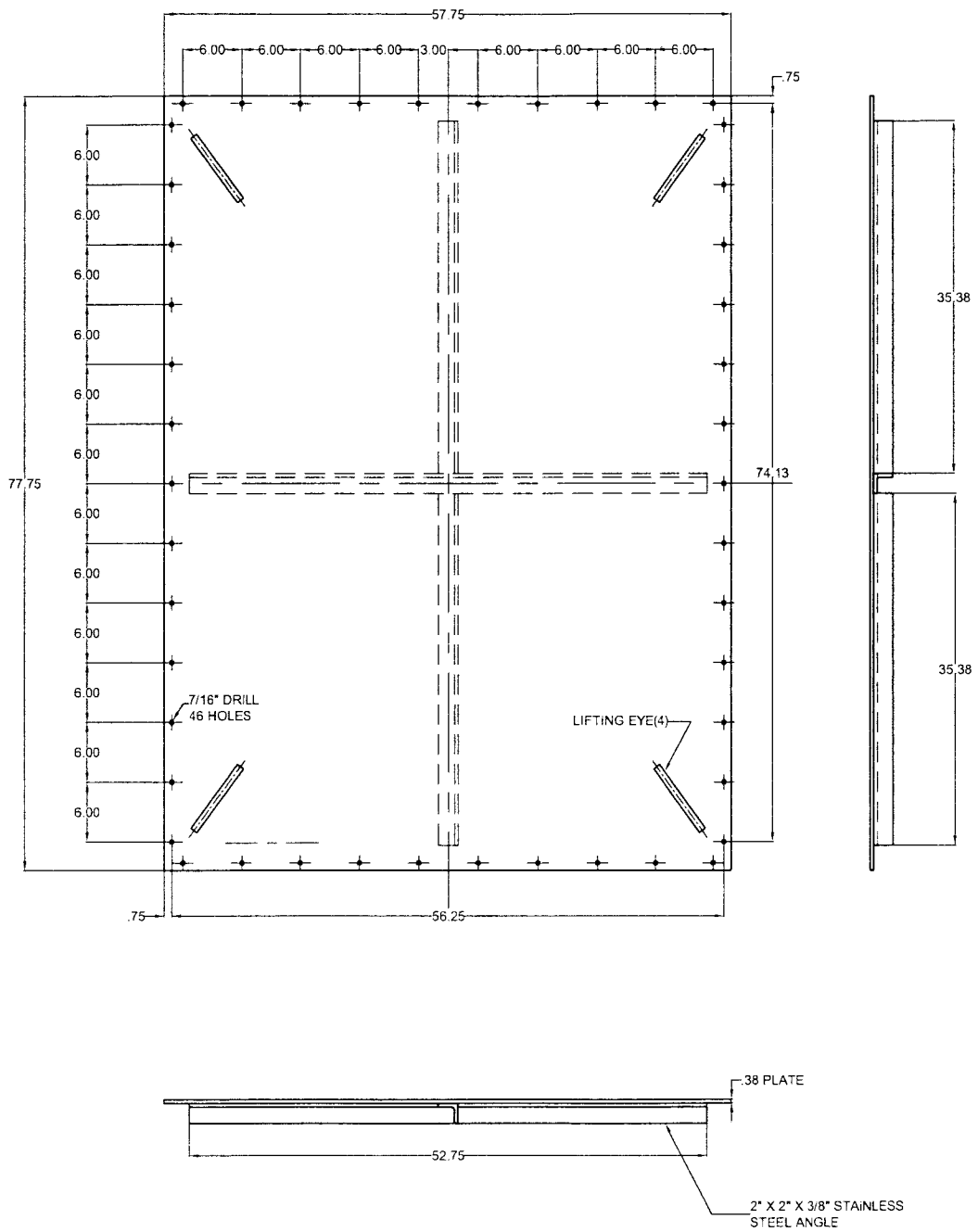

SE COVER

QTY: 1

MATERIAL: 316 STAINLESS

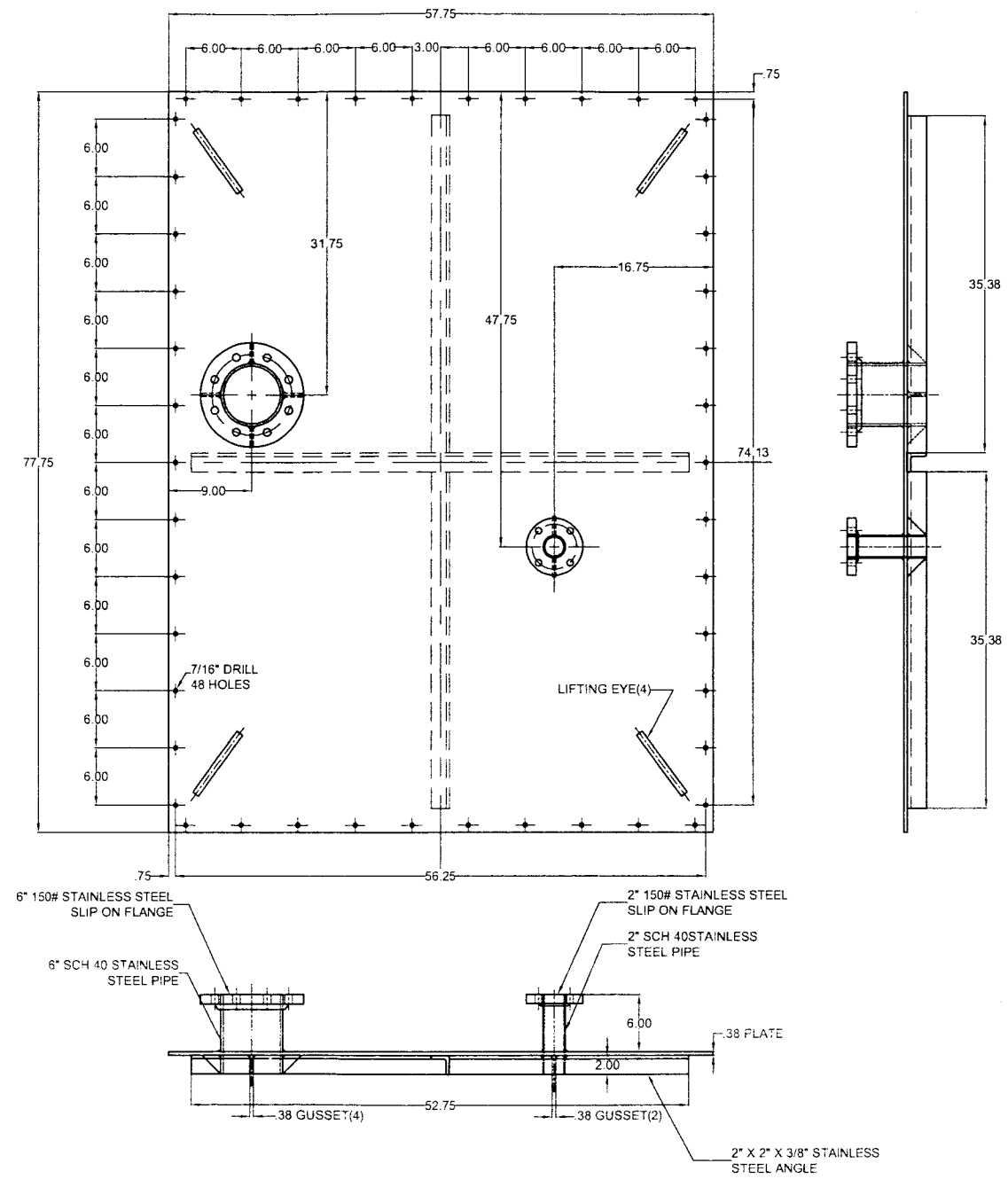

NE COVER

QTY: 1

MATERIAL: 316 STAINLESS

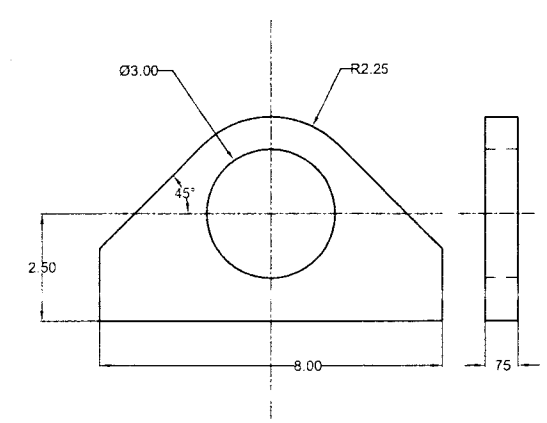

LIFTING EYE

QTY: 8

MATERIAL: 316 STAINLESS

DRAWING NO.	DESCRIPTION

THIS PRINT AND ALL INFORMATION THEREON IS THE PROPERTY OF ALABAMA BY-PRODUCTS CORPORATION and is confidential and must not be made public or copied unless so authorized by them and is subject to return upon demand.

	BY	DATE
DRAWN	SMK	7-20-16
CHECKED		
APPROVED		
APPROVED		

ALABAMA BY-PRODUCTS CORPORATION
FOUNDRY COKE • COAL • COAL CHEMICALS
COKE OVEN AND BY-PRODUCTS DIVISION
P. O. BOX 6507 – TARRANT BRANCH
BIRMINGHAM, ALABAMA 35217

DRAIN COLLECTION(NAPTH) SUMP COVERS

DATE: 7-20-2016
SCALE: 1/8

ABC 3705

* INDICATES ITEMS NOT SHOWN.
◘ INDICATES RECOMMENDED SPARE PARTS.

	No.	QTY.	NAME	DRAWING No. OR DESCRIPTION	PART No.
	28	1	THREADLOCKER	LOCTITE #271	23271
	29	6	ADJUSTING NUT	1 1/2-6 UNC HEX NUT	U24H5-V
	44	4	LOWER SCREEN FASTENER	A2.5SSSA107-2 (3/8-16 UNC X 1-3/4" LG STUD)	V3725
◘	46	1	IMPELLER WASHER	A2SHA5046	25030
	77	1	SHAFT GUARD	47-3710	ZBSG47-3710
	78	2	HOSE CLAMP	MCMASTER-CARR #5322K37	218524
	79	1	VAPOR SLEEVE	47-3711 - VITON	218525
	80	1	EXPANSION JOINT	3" - DINATECNICA - JEBT - BROWN	218522
	93	3	ADJUSTING WASHER	1-1/2" LOCK WASHER	U24-14-Z
◘	95	1	DISCHARGE PIPE GASKET	C3SHA5095 - GARLOCK 3300	218532
	202	1	BEARING COLUMN BASE	D4SRK5002-2	21903
	206	1	SHAFT W LOCKNUT & KEY	D4SHKC5002-6	21916
	216	6	COLUMN BASE FASTENER	5/8"-11 UNC X 3-1/2" LG HEX SCREW	U10H1-14V
		6		5/8" LOCK WASHER	U10-14-Z
	221	1	FLINGER	A4SHA5021	46740
*	TAG	1	TAG KIT	A389934	ZTAGKITVERTGMS

	No.	QTY.	NAME	DRAWING No. OR DESCRIPTION	PART No.
	1	1	PEDESTAL	47-3706	218521
	2	1	BEARING ASSEMBLY	47-3705	GBA4-5TB
◘	3	1	IMPELLER	D47-1926	23077
◘	4	1	LOWER SCREEN	D47-1899	23055
◘	5	1	UPPER SCREEN	D4SHB5005	24929
	6	1	AGITATOR SHAFT	C47-1901	23076
◘	7	1	COVER PLATE	D3SNA5007	25531
◘	8	1	AGITATOR	D47-1900	23052
	9	4	UPPER SCREEN FASTENER	3/8-16 UNC X 1" LG HEX SCREW	U6H1-4S
		4		3/8" FLAT WASHER	U6-11-S
		4		3/8" LOCK WASHER	U6-14-S
◘	10	1	CASING	D3SNA5010	21607
*	11	5	COVER PLATE/DISCH PIPE FASTENER	3/4-10 UNC 1-3/4" LG HEX SCREW	V0453
		5		3/4" LOCK WASHER	U12-14-S
	12	13	PEDESTAL/CASING FASTENER	3/4-10 UNC X 4-1/2" LG HEX SCREW	V0489
		13		3/4-10 UNC HEX NUT	U12H5-S
		13		3/4" LOCK WASHER	U12-14-S
◘	13	2	O-RING	#2-222 - VITON	35T38V222
	23	4	LOWER SCREEN FASTENER	3/8-16 UNC HEX NUT	U6H5-S
	24	4	LOWER SCREEN FASTENER	3/8" LOCK WASHER	U6-14-S
	25	8	EXPANSION JOINT FASTENER	5/8-11 UNC X 3-1/4" LG HEX SCREW	U10H1-13S
		8		5/8-11 UNC HEX NUT	U10H5-S
		16		5/8" FLAT WASHER	U10-11-S
	26	1	DISCHARGE PIPE	47-3709	218523

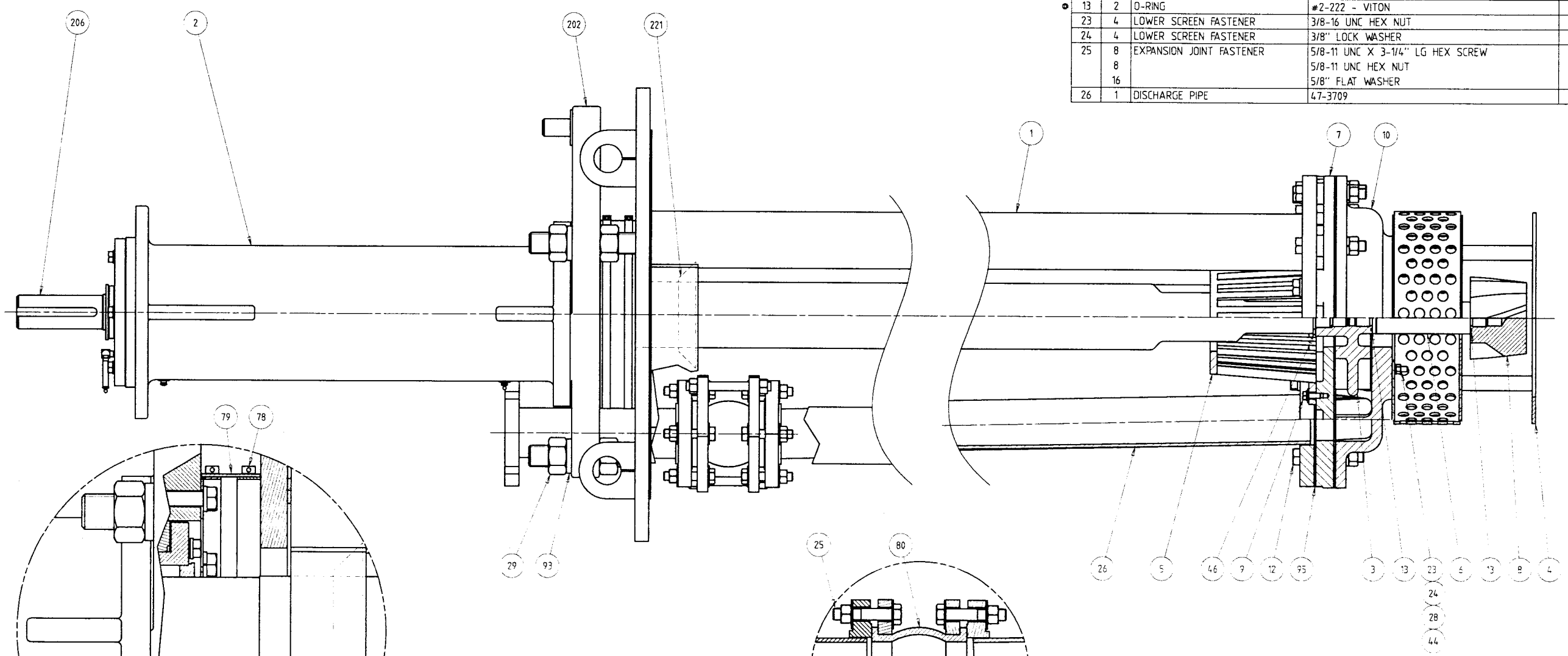

⚠ DETAIL OF VAPOR SLEEVE AREA

⚠ DETAIL OF EXPANSION JOINT AREA

REV	DESCRIPTION	DATE	REF. NO	BY	CHK
1	ADDED DETAIL VIEWS OF VAPOR SLEEVE AREA & EXPANSION JOINT AREA	17JAN2017	ECN27363MAD	EAK	KDS

OFFICE OF ORIGIN: MADISON

Copyright © Weir Slurry Group, Inc. 2016
Weir Slurry Group, Inc. ("the Company") is the owner of the copyright and other confidential information in this drawing.
The drawing must not be used in whole or in part, in any form or by any means, and the information in it must not be disclosed to any person or used for any purpose other than the specific purpose for which it has been provided, without the prior written consent of the Company.

SCALE: -
APP. JC
CHK. KDS
DRN. E. KISTER
DATE 13DEC2016
SHEET 1 OF 1

PRODUCT
WARMAN®
Centrifugal Slurry Pumps

WEIR MINERALS

TITLE
3SN4-5100A X 72" LG - HI CHROME, WITH AGITATOR, INPRO SEALS, LOWER DISCHARGE CONNECTION AND VAPOR SLEEVE

3SN45172CA5268
COMPONENTS DIAGRAM

SHEET SIZE A2 | DRAWING No. A395240 | REVISION 1

* INDICATES ITEMS NOT SHOWN

◎ RECOMMENDED SPARE PARTS

No.	QTY.	NAME	DRAWING No. OR DESCRIPTION	PART No.
29	1	THREADLOCKER	LOCTITE #271	23071
32	1	ADJUSTING NUT	1-14 UNC HEX NUT	22546
44	4	COVER FITTING FASTENER	A2SHA5006 X 1-1/4" LG HEX SCREW	V3126
	6		3/8-16 UNC HEX NUT	U8H5-S
	6		3/8 LOCK WASHER	U6-14-S
◎ 46	1	IMPELLER WASHER	A2SHA5066	25330
77	1	SHAFT GUARD	47-3775	ZBS047-3775
78	2	HOSE CLAMP	MCMASTER-CARR #5322K37	218524
79	1	VAPOR SLEEVE	47-3711 - VITON	218525
80	1	EXPANSION JOINT	1-1/2" - DINATECNICA - LEBT - BROWN	218529
93	3	ADJUSTING WASHER	1-1/4" LOCK WASHER	U20-14-Z
◎ 95	1	DISCHARGE PIPE GASKET	A1.5SHA5095 - GARLOCK 3300	218533
202	1	BEARING COLUMN BASE	D2SRK5002-2	21133
206	1	SHAFT W/ LOCKNUT & KEY	D2SHKB5002-6	22720
216	6	COLUMN BASE FASTENER	5/8-11 UNC X 4" LG STUD	U1079-16V
	12		5/8-11 UNC HEX NUT	U10H5-V
	6		5/8" LOCK WASHER	U10-14-Z
221	1	FLINGER	A2SHA5002-21	22053
* TAG	1	TAG KIT	A389934	ZTAGKITVERTGMS

No.	QTY.	NAME	DRAWING No. OR DESCRIPTION	PART No.
1	1	PEDESTAL	47-3711	218528
2	1	BEARING ASSEMBLY	47-3701	CB-03518
◎ 3	1	IMPELLER	C047-1930	23024
◎ 4	1	LOWER SCREEN	C47-1899	23095
◎ 5	1	UPPER SCREEN	D2SHA5005	21942
6	1	AGITATOR SHAFT	C47-1901	23075
◎ 7	1	COVER PLATE	D1.5SNA5007	21952
◎ 8	1	AGITATOR	C47-1912	23075
9	4	UPPER SCREEN FASTENER	3/8-16 UNC X 1" LG HEX SCREW	U6H1-4S
	4		3/8" FLAT WASHER	U6-11-S
	4		3/8 LOCK WASHER	U6-14-S
◎ 10	1	CASING	D1.5SNA5010	21959
11	1	DISCHARGE PIPE FASTENER	5/8-11 UNC X 1-1/2" LG HEX SCREW	U10H1-6S
	1		5/8" LOCK WASHER	U10-14-S
12	10	CASING FASTENER	5/8-11 UNC X 4" LG HEX SCREW	U10H1-16S
	10		5/8-11 UNC HEX NUT	U10H5-S
	10		5/8" LOCK WASHER	U10-14-S
◎ 13	2	O-RING	#2-222 - VITON	35T38V222
25	8	EXPANSION JOINT FASTENER	1/2-13 UNC X 2-1/2" LG HEX SCREW	U8H1-10V
	8		1/2-13 UNC HEX NUT	U8H5-S
	16		1/2" FLAT WASHER	U8-11-S
26	1	DISCHARGE PIPE	47-3717	218530

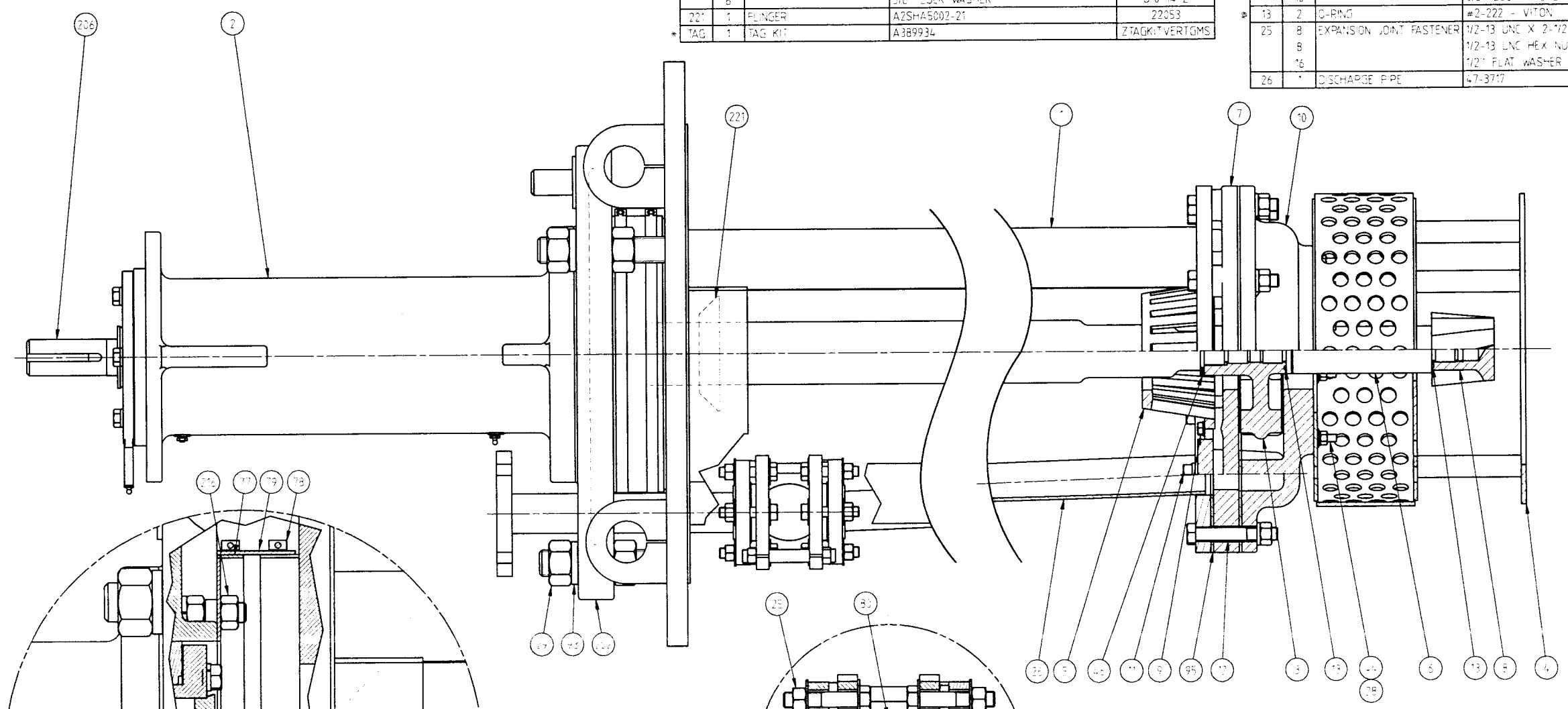

△ DETAIL OF VAPOR SEAL AREA

△ DETAIL OF EXPANSION JOINT AREA

REV	DESCRIPTION	DATE	REF. NO.	BY	CHK
1	ADDED DETAIL VIEWS OF VAPOR SEAL AREA & EXPANSION JOINT AREA	11JAN2017	ECN127363MAD	EAK	KDS

OFFICE OF ORIGIN: MADISON

SCALE --

APP. CG

CHK. KDS

DRN. E. KISTER

DATE 13DEC2016

SHEET 1 OF 1

Copyright © Weir Slurry Group, Inc. 2016
Weir Slurry Group, Inc. ("the Company") is the owner of the copyright and all confidential information in this drawing.
The drawing must not be copied in whole or in part, in any form or by any means, and the information in it must not be disclosed to any person or used for any purpose other than the specific purpose for which it has been provided without the prior written consent of the Company.

PRODUCT
WARMAN®
Centrifugal Slurry Pumps

WEIR MINERALS

TITLE
1.5SN2-5100A X 60" LG - HIGH CHROME, WITH AGITATOR, INPRO SEALS, LOWER DISCHARGE CONNECTION AND VAPOR SEAL

1.5SN25160CA268
COMPONENTS DIAGRAM

SHEET SIZE A2 | DRAWING No A395241 | REVISION 1

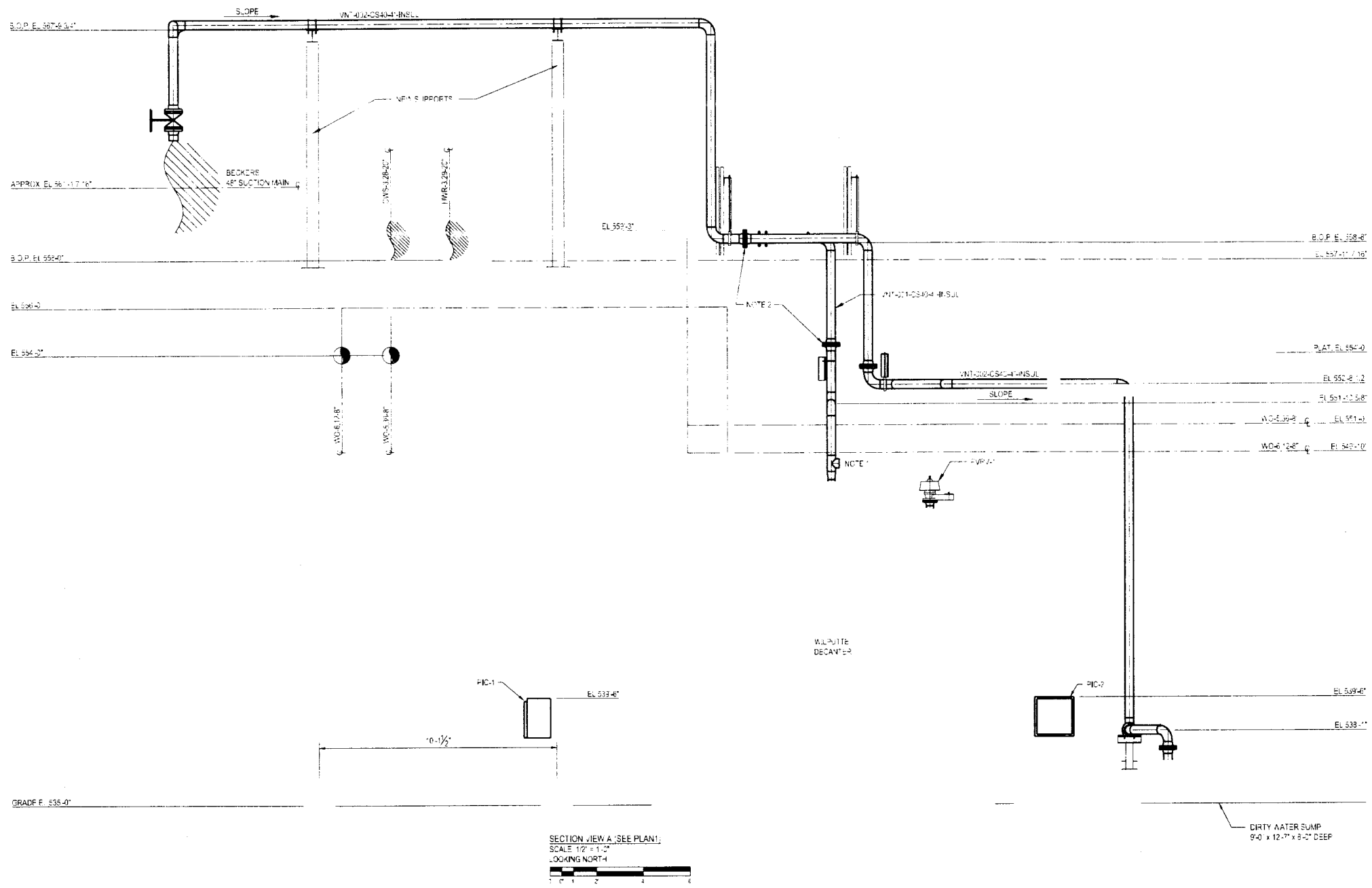

NOTES:

1. 4" TEE BRANCH TO BE BLANK DRILLED WITH 1" HOLE PLUGGED.
2. FLANGES INCLUDED TO DISMANTLE IF TUBE BUNDLE MUST BE REMOVED.

ABC COKE
A Division of Drummond Company, Inc.
TARRANT, ALABAMA

REFERENCE	DWG NO
N/S PIPE BRIDGE	723-3740-0380
PROCESS WATER DECANTER TANK (WILPUTTE)	723-3630-0280
PIPING LIGHT OIL RECOVERY UNIT MISC SECTS	723-3640-0267
PIPING LIGHT OIL RECOVERY UNIT	723-3640-0266

REV	DESCRIPTION	CHECKED	DATE
1	ISSUED FOR REVIEW	MJS	01/31/17

DRAWN BY	RJG	01/17/17
CHECKED BY	MJS	01/20/17
APPROVED BY	SW	

Borton Lawson
ENGINEERING ARCHITECTURE
www.borton-lawson.com

ABC COKE
TARRANT, ALABAMA
VENT CAPTURE
WILPUTTE DECANTER & DIRTY WATER SUMP
SECTION VIEW A

CUSTOMER PROJECT NO 2016-2379-003
SCALE: 1/2" = 1'-0"

ELEV1-1

REVISION A

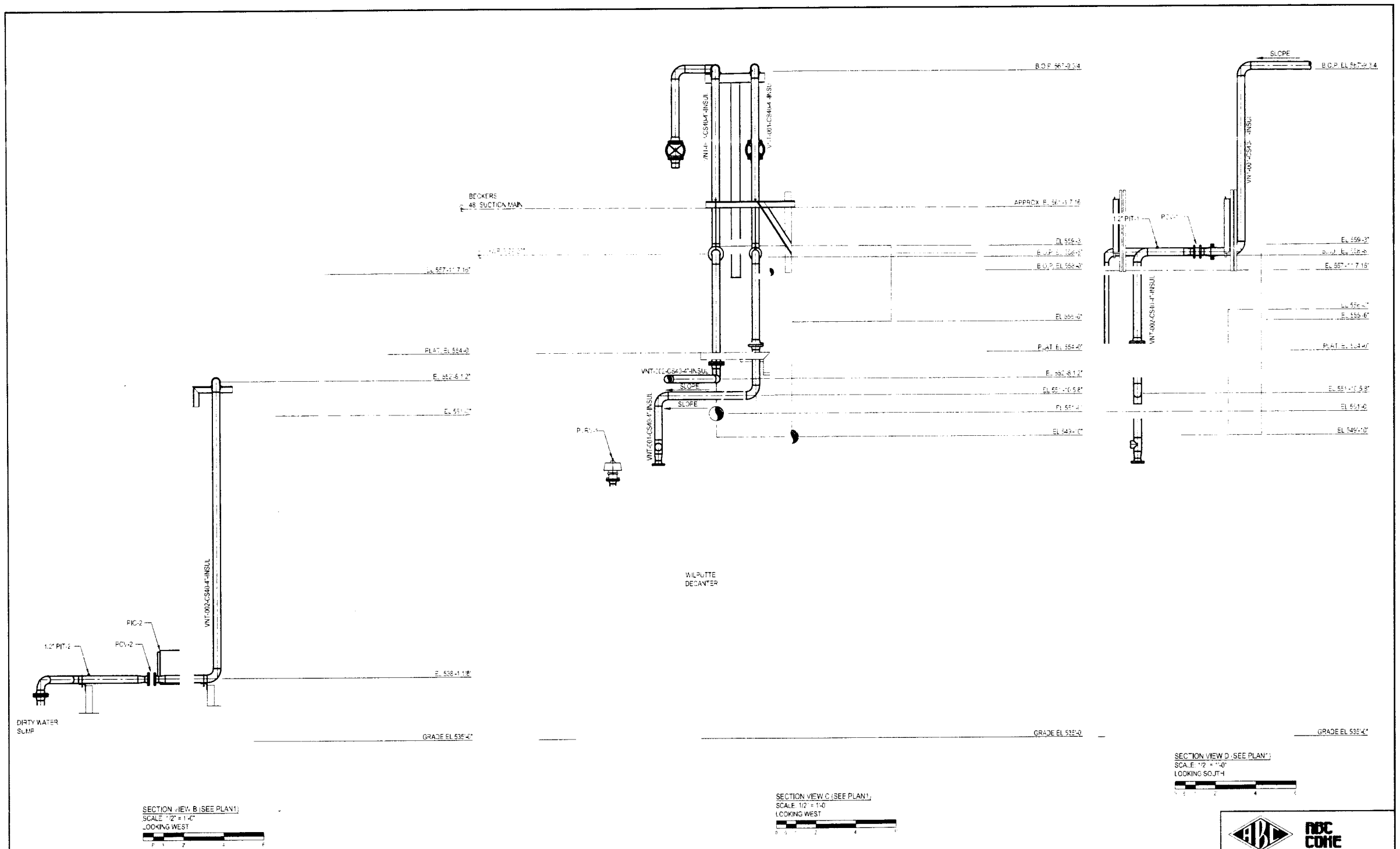

REFERENCE	DWG NO
N/S PIPE BRIDGE	723-3740-0300
PROCESS WATER DECANTER TANK (WILPUTTE)	723-3630-0090
PIPING LIGHT OIL RECOVERY UNIT MISC SECTS	723-3640-0067
PIPING LIGHT OIL RECOVERY UNIT	723-3640-0066

REV	DESCRIPTION	CHECKED	DATE
1			
2			
3			
4	ISSUED FOR REVIEW	MJS	01/31/17

FILE NAME: ELEV1-2

DRAWN BY	RJG	DATE 01/17/17
CHECKED BY	MJS	DATE 01/20/17
APPROVED BY	SW	DATE

Borton Lawson
ENGINEERING
ARCHITECTURE
www.borton-lawson.com

ABC COKE
A Division of Drummond Company, Inc.
TARRANT, ALABAMA

ABC COKE
TARRANT, ALABAMA
VENT CAPTURE
WILPUTTE DECANTER & DIRTY WATER SUMP
SECTION VIEW B, C, & D

CUSTOMER PROJECT NO 2015-2379.003
SCALE 1/2" = 1'-0"

ELEV1-2

REVISION A

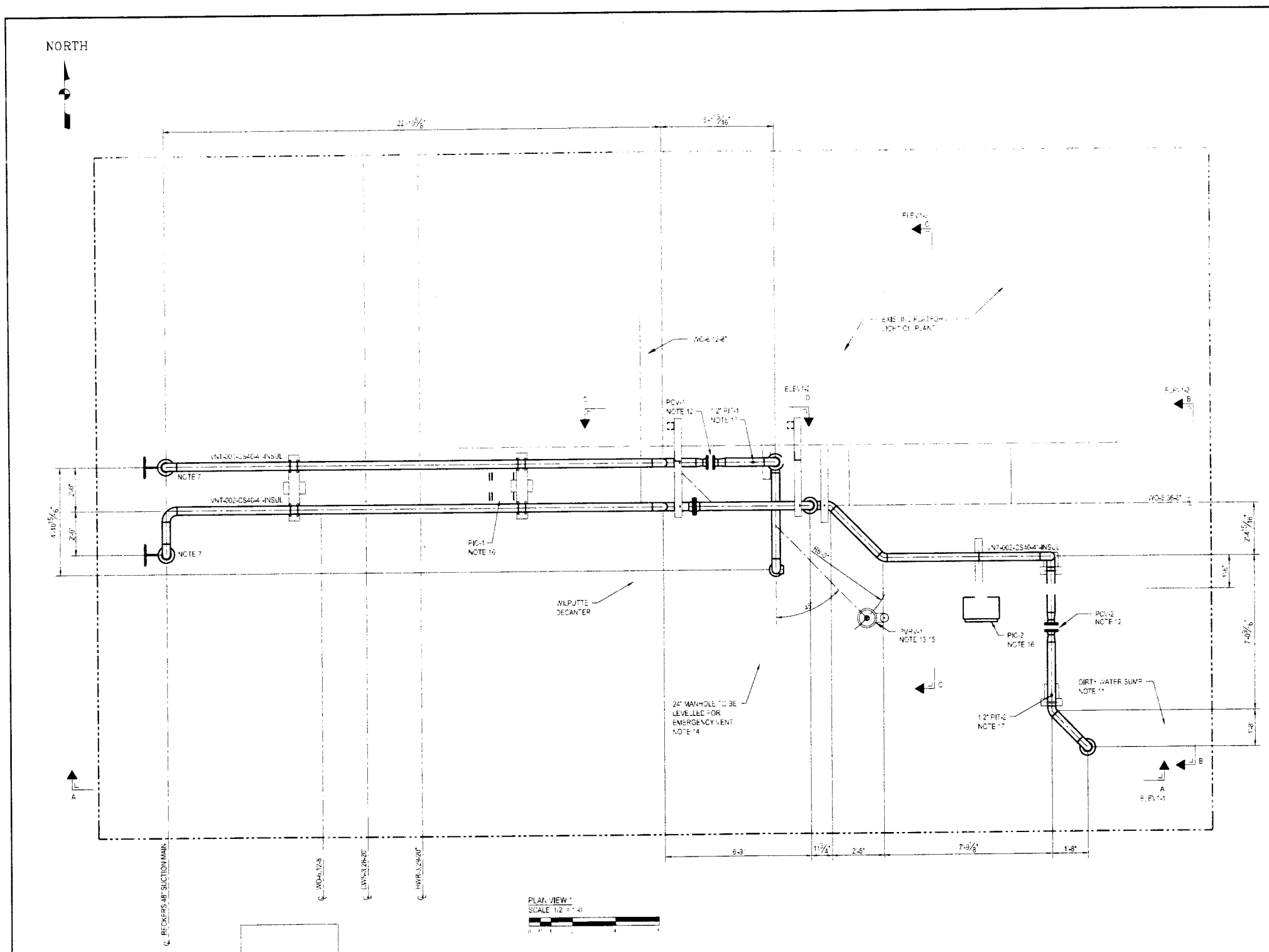

NOTES

1. FABRICATION SHALL BE IN ACCORDANCE WITH ABC COKE PIPING STANDARDS.
2. 3" AND LARGER PIPE TO BE SEAMLESS OR WELDED ASTM A-53 GR.B STANDARD WEIGHT.
3. 3" AND LARGER FITTINGS TO BE SEAMLESS STEEL BUTT WELDING ASTM A-234 GR WPB STANDARD WEIGHT.
4. 2" AND LARGER FLANGES TO BE 15 LB RF ANSI STANDARD FORGED STEEL WELD NECK OR SLIP-ON TYPE ASTM A-181 GR I.
5. USE FLAT FACE FLANGE WHERE REQUIRED TO MATE EQUIPMENT.
6. PIPE SECTIONS SHALL BE SHOP PRIMED AND FINISHED COATED WITH INCURON INDURETHANE ENAMEL.
7. WALL THICKNESS MUST BE CHECKED BEFORE HOT TAPS. HOT TAP LOCATIONS SHOWN ON DRAWING MAY NEED TO BE CHANGED. USE SUPPORT WHERE NEEDED.
8. ALL LINES SLOPED BACKWARDS TO VAPOR SOURCE.
9. ALL UNUSED HOLES TO BE PLUGGED BEFORE STARTUP.
10. INCLUDE 1 1/2" THICK CALCIUM SILICATE PER ASTM SPECIFICATIONS C533-67 PLUS ALUMINUM JACKET, ALL LINES TO BE STEAM TRACED.
11. DIRTY WATER SUMP PUMP TO BE LOCATED LATER.
12. PVC-1 AND PVC-2 TO BE FISHER 8580-3 IN WCC BODY BUTTERFLY VALVE WITH 2052 ACTUATOR SITTING UPRIGHT AND 3610J 3-15 PSI POSITIONER.
13. PVRV-1 VAREC MODEL 2010B-3-4-V-FF-VS-02-02 SET @ 9" WC VAC 0.75 OZ.
14. EMERGENCY VENT, GROTH MODEL # 2000A-24-3-T200 A.P.I. 650 DRILLED SET @ 10" WC.
15. CONTRACTOR TO INSTALL NEW LEVELLED 3" RF ANSI 150# NOZZLE, AVOID EXISTING WELDS IF PRESENT.
16. PIC-1 AND PIC-2 TO BE YOKOGAWA CONTROLLER UT-550 OR EQUIV. INCLUDE 20 x 20 x 12" DEEP SS SEE-THROUGH CONTROL PANEL AND LOCAL ALARM. ADD UNISTRUT SUPPORT AS REQUIRED.
17. PIT-1 AND PIT-2 TO BE YOKOGAWA STYLE 8" OF HARP MODEL EJA-110A STYLE S1 SUFFIX - ELS4B-92EA7-F1/D1.
18. ALL DIMENSIONS TO BE FIELD CHECKED.

ABC COKE
A Division of Drummond Company, Inc.
TARRANT, ALABAMA

REFERENCE	DWG NO
N/S PIPE BRIDGE	723-3740-0300
PROCESS WATER DECANTER TANK (WILPUTTE)	723-3630-0280
PIPING LIGHT OIL RECOVERY UNIT MISC SECTS	723-3640-0267
PIPING LIGHT OIL RECOVERY UNIT	723-3640-0266

REV	DESCRIPTION	CHECKED	DATE
A	ISSUED FOR REVIEW	MJS	01/31/17

DRAWN BY	RJG	01/17/17
CHECKED BY	MJS	01/20/17
APPROVED BY	SW	

Borton Lawson
ENGINEERING ARCHITECTURE
www.borton-lawson.com

ABC COKE
TARRANT, ALABAMA
VENT CAPTURE
WILPUTTE DECANTER & DIRTY WATER SUMP
PLAN VIEW

CUSTOMER PROJECT NO 2016-2379-003
SCALE 1/2" = 1'-0"
PLAN1
REVISION A

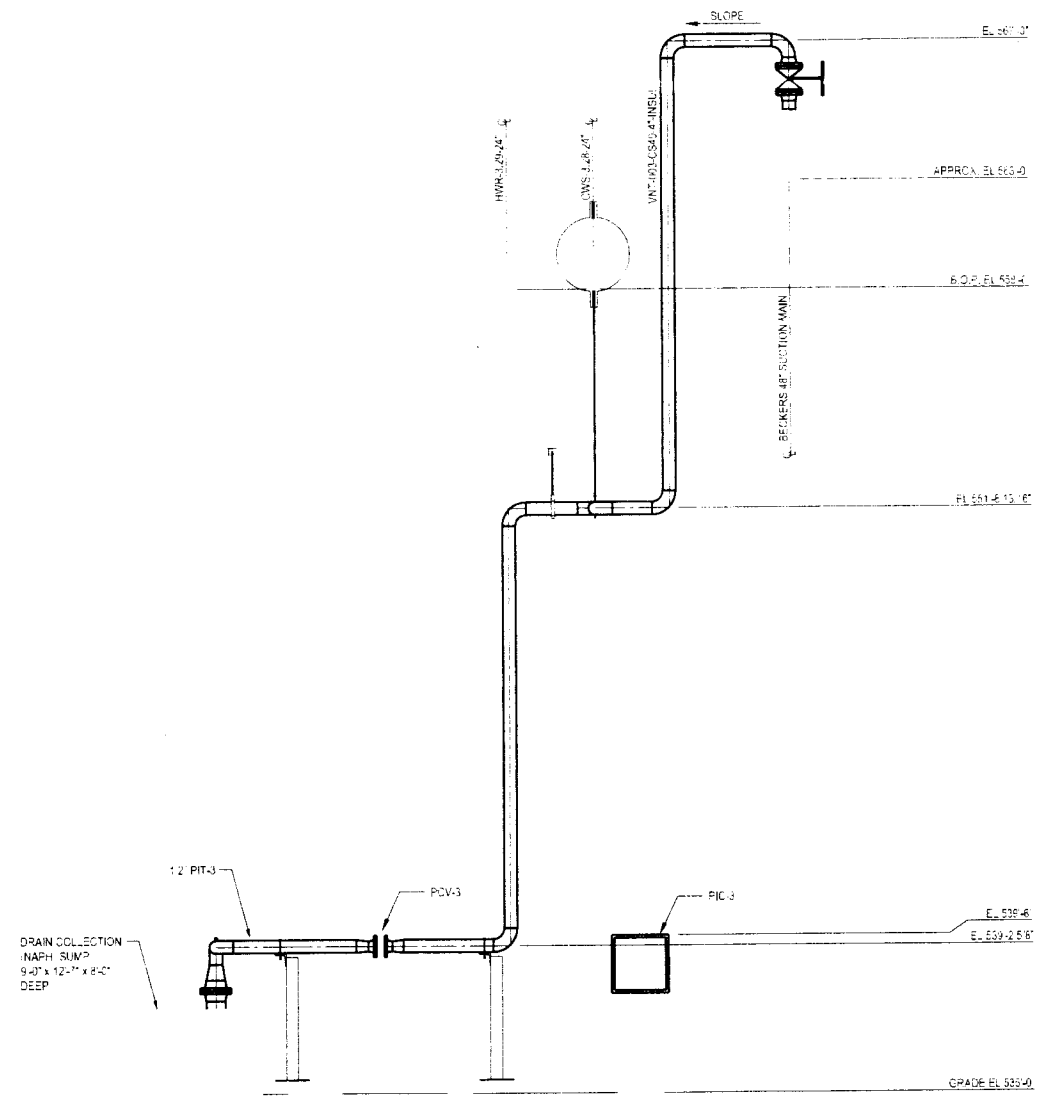

SECTION VIEW A (SEE PLAN2)
SCALE 1/2" = 1'-0"
LOOKING SOUTH

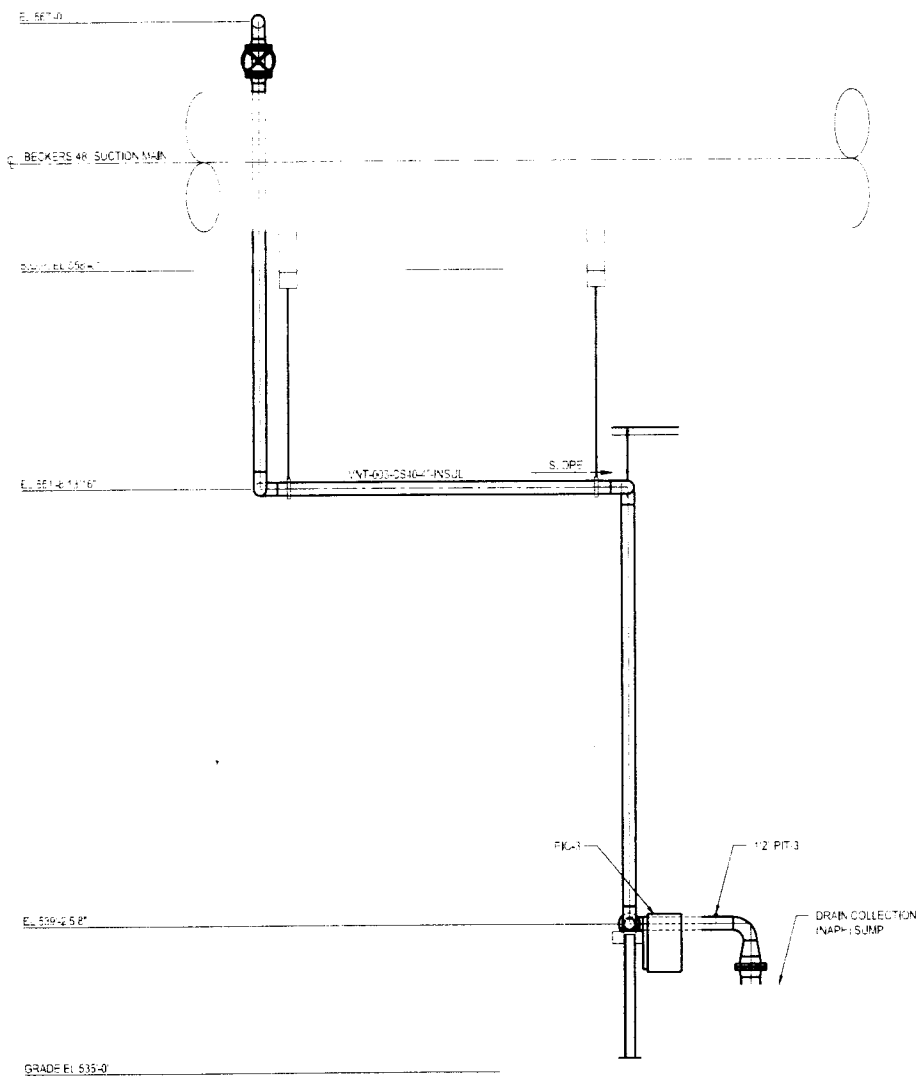

SECTION VIEW B (SEE PLAN2)
SCALE 1/2" = 1'-0"
LOOKING EAST

ABC COKE
A Division of Drummond Company, Inc.
TARRANT, ALABAMA

REFERENCE	DWG NO
N/S PIPE BRIDGE	723-3740-0300

REV	DESCRIPTION	CHECKED	DATE
A	ISSUED FOR REVIEW	MJS	01/31/17

JUL 02 '99	RJC	01/17/17	
06:51	MJS	01/20/17	
ELEV2-1	SW		

Borton Lawson
ENGINEERING ARCHITECTURE
www.borton-lawson.com

ABC COKE
TARRANT, ALABAMA
VENT CAPTURE
DRAIN COLLECTION (NAPH) SUMP
SECTION VIEW A & B

CUSTOMER PROJECT NO. 2016-2379-003
SCALE: 1/2" = 1'-0"
ELEV2-1
REVISION A

NORTH

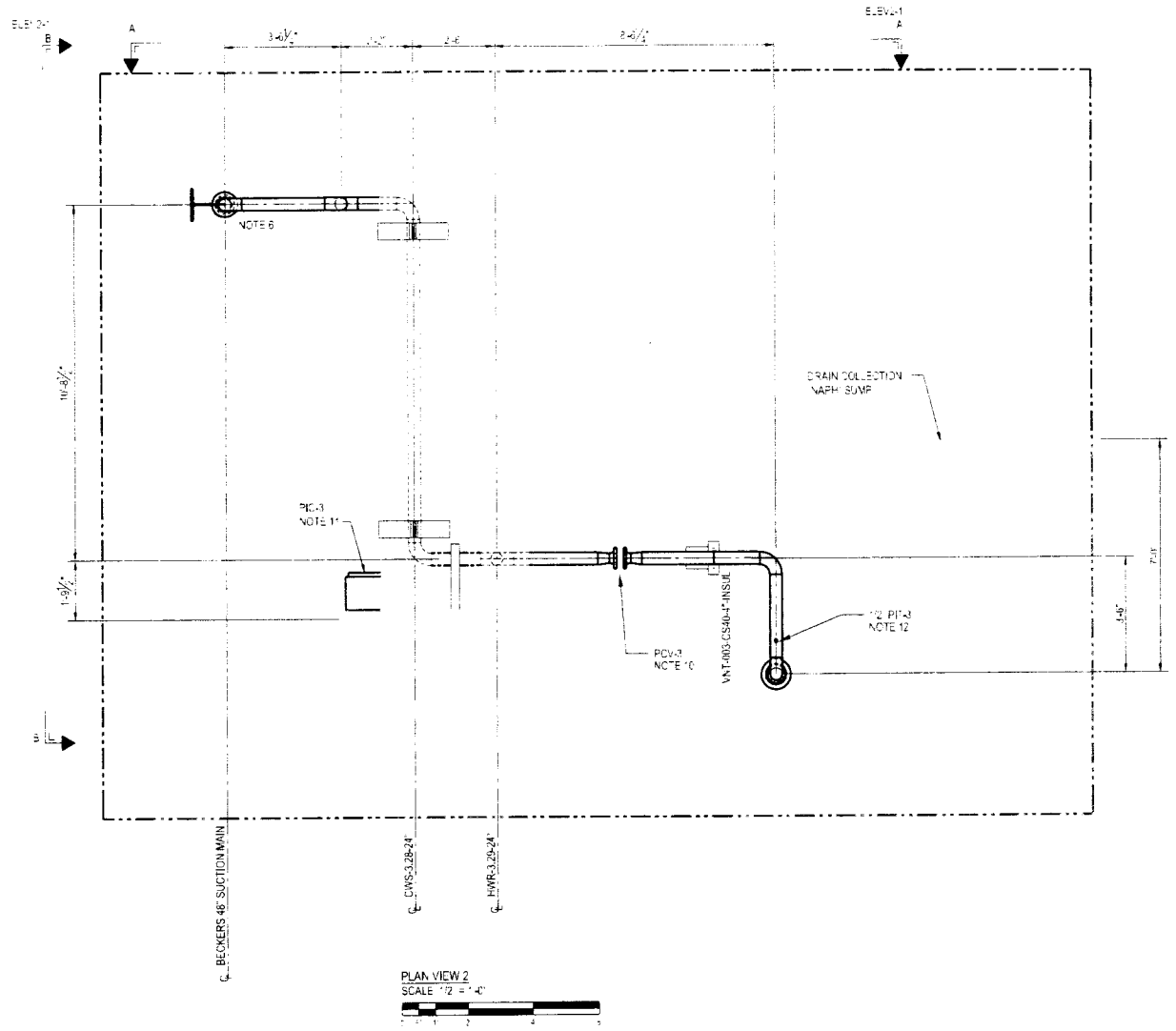

PLAN VIEW 2
SCALE 1/2" = 1'-0"

NOTES:

1. FABRICATION SHALL BE IN ACCORDANCE WITH ABC COKE PIPING STANDARDS.
2. 2" AND LARGER PIPE TO BE SEAMLESS OR WELDED, ASTM A53 GR.B STANDARD WEIGHT.
3. 2" AND LARGER FITTINGS TO BE SEAMLESS STEEL BUTT WELDING, ASTM A234 GR. WPB, STANDARD WEIGHT.
4. 2" AND LARGER FLANGES TO BE 150# RF ANSI STANDARD FORGED STEEL WELD NECK OR SLIP-ON TYPE, ASTM A-181 GR. I.
5. PIPE SECTIONS SHALL BE SHOP PRIMED AND FINISHED COATED WITH INDURON INDURETHANE ENAMEL.
6. WALL THICKNESS MUST BE CHECKED BEFORE HOT TAPS. HOT TAP LOCATIONS SHOWN ON DRAWING MAY NEED TO BE CHANGED. USE SUPPORT WHERE NEEDED.
7. ALL LINES SLOPED BACKWARDS TO VAPOR SOURCE.
8. ALL UNUSED HOLES TO BE PLUGGED BEFORE STARTUP.
9. INCLUDE 1 1/2" THICK CALCIUM SILICATE PER ASTM SPECIFICATIONS C533-67, PLUS ALUMINUM JACKET. ALL LINES TO BE STEAM TRACED.
10. PVC-3 TO BE FISHER 9580 2 IN ACC BODY BUTTERFLY VALVE WITH 2052 ACTUATOR SITTING UPRIGHT AND 3512 3-15 PSI POSITIONER.
11. PIC-3 TO BE YOKOGAWA CONTROLLER UT-550 OR EQUIV. INCLUDE 20" x 20" x 12" DEEP SS SEE-THROUGH CONTROL PANEL AND LOCAL ALARM. ADD UNISTRUT SUPPORT AS REQUIRED.
12. PIT-3 TO BE YOKOGAWA STYLE 31 DP HARP MODEL EJA-110A STYLE S1 SUFFIX - ELS4B-92EA7FF 7D1.
13. ALL DIMENSIONS TO BE FIELD CHECKED.

ABC COKE
A Division of Drummond Company, Inc.
TARRANT, ALABAMA

					DRAWN BY RJG	DATE 01/17/17	
					CHECKED BY MJS	DATE 01/26/17	
N/S PIPE BRIDGE	723-3745-0300	3	ISSUED FOR REVIEW	MJS	01/31/17	APPROVED BY SW	DATE
REFERENCE	DWG NO	REV	DESCRIPTION	CHECKED	DATE	PLAN2	

Borton Lawson
ENGINEERING
ARCHITECTURE
www.borton-lawson.com

ABC COKE
TARRANT, ALABAMA
VENT CAPTURE
DRAIN COLLECTION (NAPH) SUMP
PLAN VIEW 2

CUSTOMER PROJECT NO 2016-2379-003
SCALE 1/2" = 1'-0"
PLAN2
REVISION A

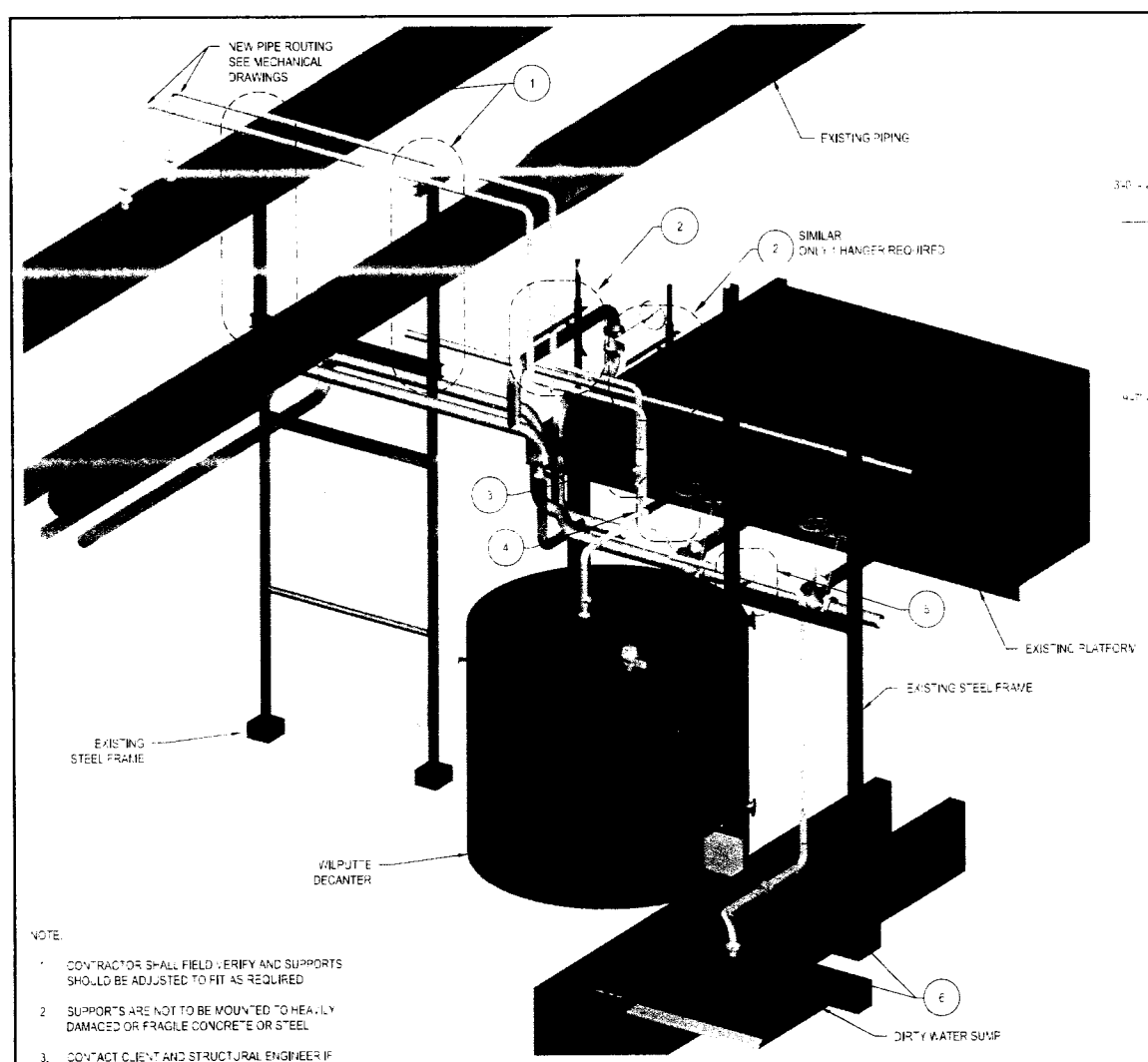

ISOMETRIC VIEW

NOTE:

1. CONTRACTOR SHALL FIELD VERIFY AND SUPPORTS SHOULD BE ADJUSTED TO FIT AS REQUIRED
2. SUPPORTS ARE NOT TO BE MOUNTED TO HEAVILY DAMAGED OR FRAGILE CONCRETE OR STEEL
3. CONTACT CLIENT AND STRUCTURAL ENGINEER IF FIELD CONDITIONS PROVE UNACCEPTABLE FOR SUPPORTING NEW PIPE ROUTING OR SUPPORTS

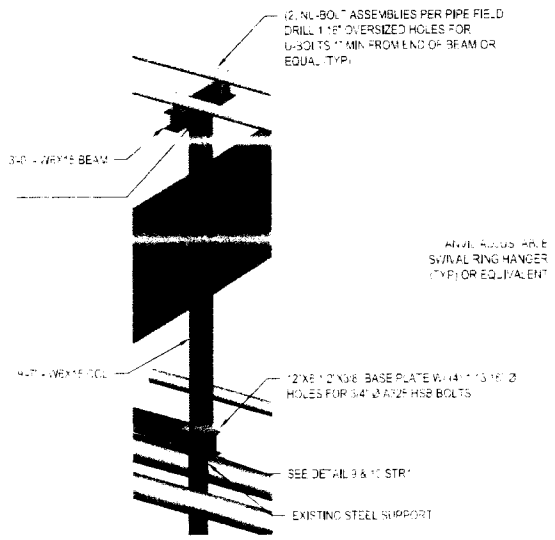

1 W6 SUPPORT

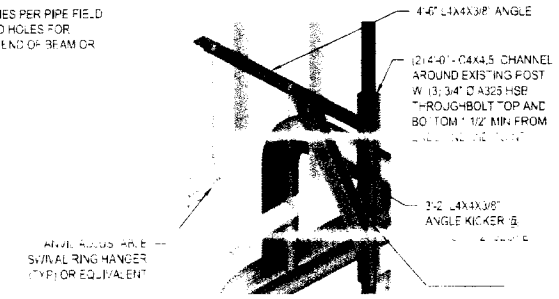

2 BRACKET HANGER SUPPORT

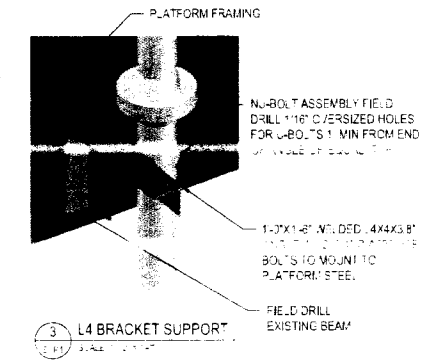

3 L4 BRACKET SUPPORT

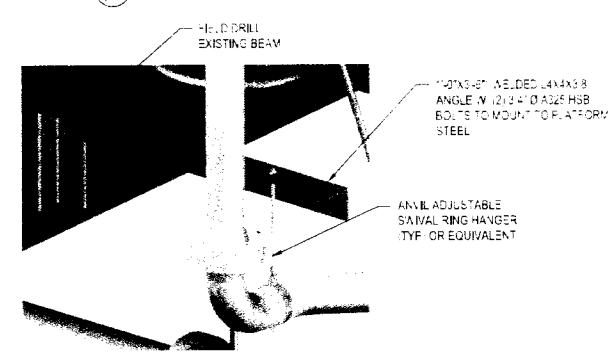

4 L4 HANGER SUPPORT

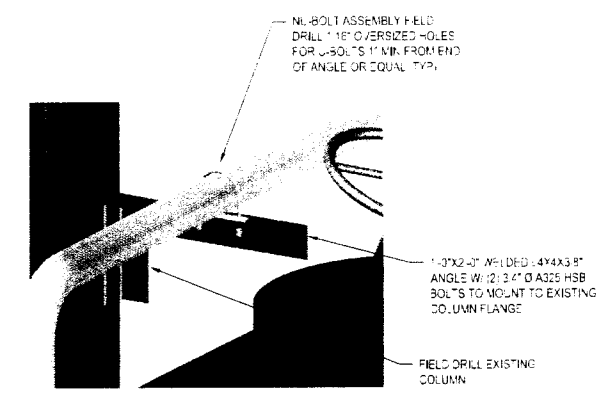

5 L4 BRACKET SUPPORT

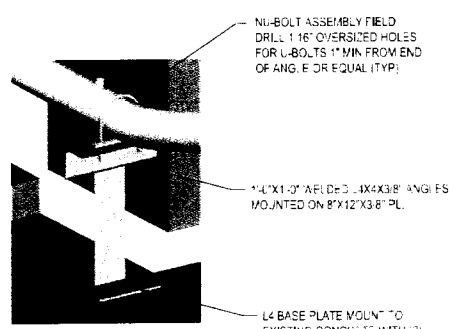

6 L4 STAND SUPPORT

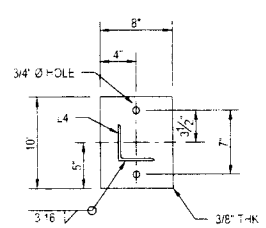

7 L4 BASE PLATE

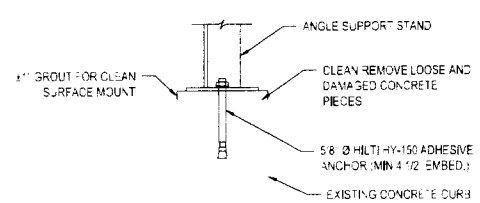

8 L4 BASE DETAIL

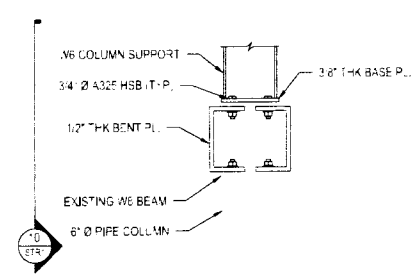

9 EXISTING BEAM REINFORCING DETAIL

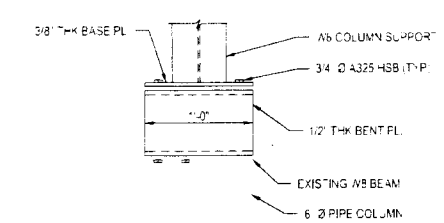

10 EXISTING BEAM REINFORCING DETAIL SECTION

ABC COKE
A Division of Drummond Company, Inc.
TARRANT, ALABAMA

N/S PIPE BRIDGE	723-3740-8300
PROCESS WATER DECANTER TANK (WILPUTTE)	723-3630-6280
PIPING LIGHT OIL RECOVERY UNIT MISC SECTS	723-3640-0267
PIPING LIGHT OIL RECOVERY UNIT	723-3640-0266
REFERENCE	DWG NO

REV	DESCRIPTION	CHECKED	DATE
A	ISSUED FOR REVIEW	CMM	01/31/17

DRAWN BY	JCP	01/31/17
CHECKED BY	CMM	01/31/17
FILE NAME	STR1-1	APPROVED BY SW

Borton Lawson
ENGINEERING ARCHITECTURE
www.borton-lawson.com

ABC COKE
TARRANT, ALABAMA

STRUCTURAL VIEWS AND DETAILS AREA 1
WILPUTTE DECANTER & DIRTY WATER SUMP
SECTION VIEW A

CUSTOMER PROJECT NO 2016-2379-003
SCALE AS NOTED

STR1 – 1

REVISION A

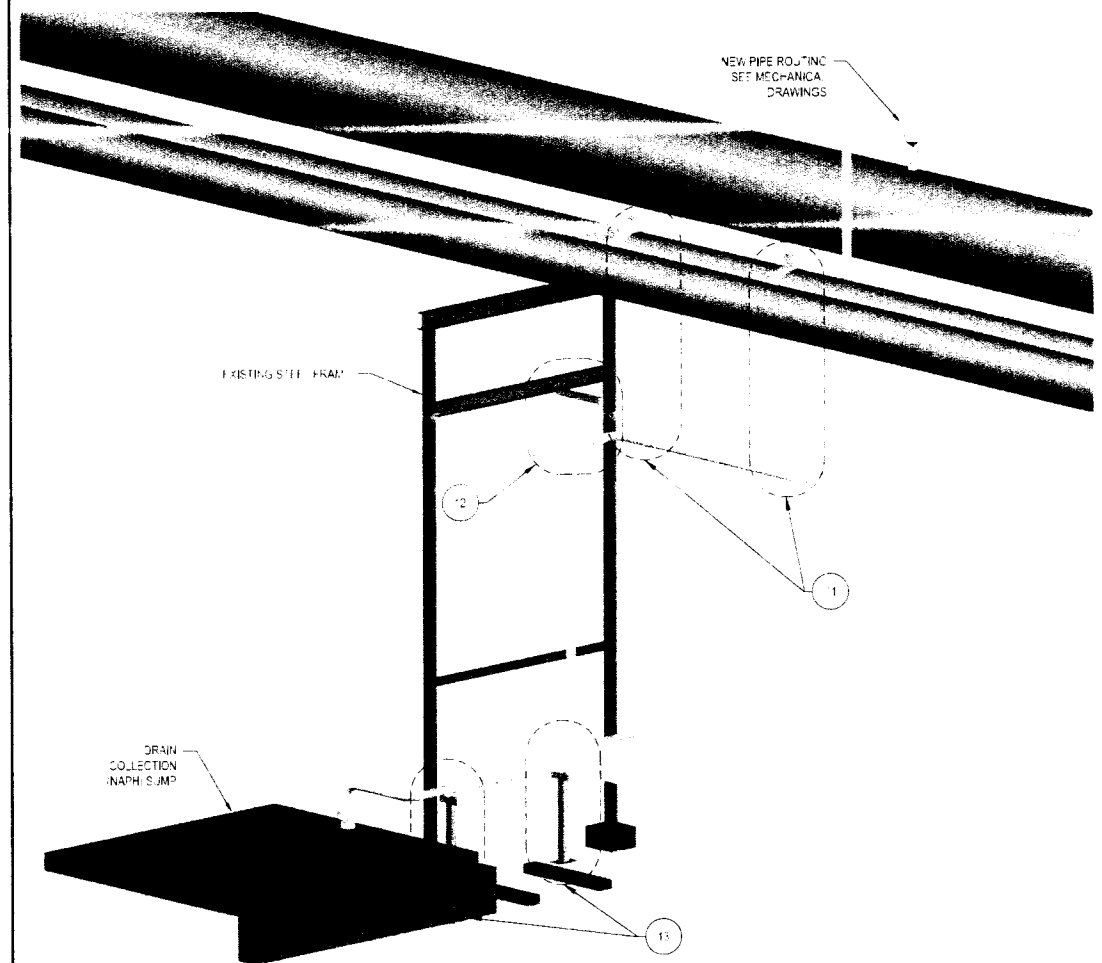

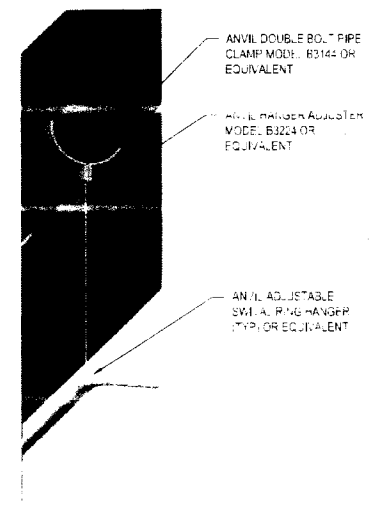

11 BRACKET HANGER SUPPORT

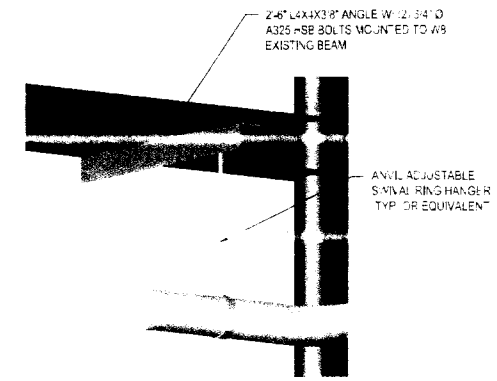

12 L4 HANGER SUPPORT

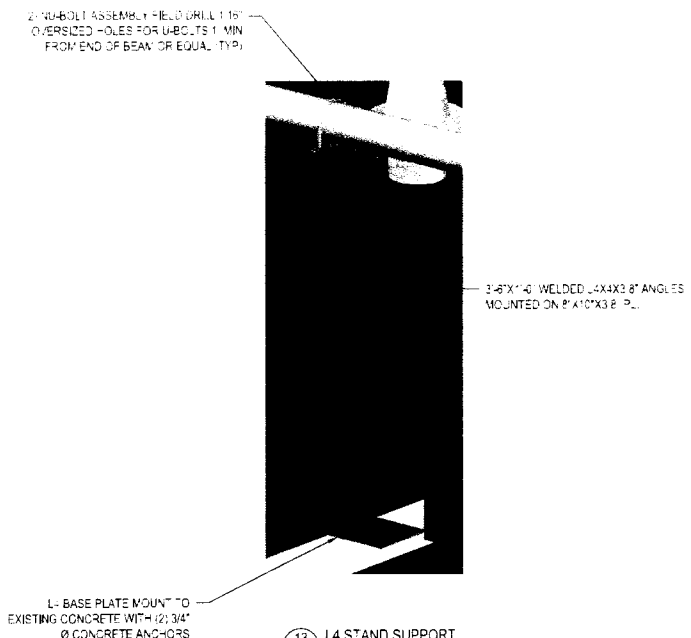

13 L4 STAND SUPPORT

NOTE

1. ALL DIMENSIONS WILL BE FIELD VERIFIED AND SUPPORTS SHOULD BE ADJUSTED TO FIT AS REQUIRED.
2. SUPPORTS ARE NOT TO BE MOUNTED TO HEAVILY DAMAGED OR FRAGILE CONCRETE OR STEEL
3. CONTACT CLIENT AND STRUCTURAL ENGINEER IF FIELD CONDITIONS PROVE UNACCEPTABLE FOR SUPPORTING NEW PIPE ROUTING OR SUPPORTS

STRUCTURAL STEEL

1. DETAIL, FABRICATE AND ERECT STRUCTURAL STEEL IN ACCORDANCE WITH THE LATEST EDITION OF THE AMERICAN INSTITUTE OF STEEL CONSTRUCTION (AISC) SPECIFICATIONS AND CODES.
2. STEEL MEMBERS SHALL BE

STRUCTURAL STEEL W & WT SHAPES	ASTM A992 GRADE 50 (FY = 50 KSI)
STRUCTURAL STEEL CHANNELS, ANGLES, BARS, PLATES	ASTM A36
STEEL BOLTS	ASTM A325 TYPE N UNLESS NOTED OTHERWISE (U.N.O.) WHERE A325 SC IS INDICATED PROVIDE SLIP CRITICAL BOLTED CONNECTIONS

3. WELD OR BOLT SHOP CONNECTIONS. FOR FIELD CONNECTIONS USE 3/4" DIAMETER HIGH STRENGTH INSTALLED TO THE "SNUG TIGHT" CONDITION DESCRIBED IN AISC SPECIFICATIONS FOR STRUCTURAL JOINTS, USING ASTM A-325 OR A490 BOLTS. FIELD WELDING WILL BE PERMITTED WHERE SPECIFICALLY CALLED FOR ON THE DRAWINGS.
4. CONNECTIONS NOT SHOWN SHALL BE DESIGNED TO SUPPORT THE BEAM REACTIONS SPECIFIED ON THE DRAWINGS. IF NO REACTIONS ARE PROVIDED, CONNECTIONS SHALL BE DESIGNED TO SUPPORT 1/2 THE TOTAL UNIFORM LOAD CAPACITY FOR THE PARTICULAR BEAM AND SPAN AS LISTED IN THE AISC MANUAL OF STEEL CONSTRUCTION.
5. PERFORM WELDING IN ACCORDANCE WITH THE AMERICAN WELDING SOCIETY "STRUCTURAL WELDING CODE", CONFORM TO AWS D1.1, E70 ELECTRODES
6. NON-SHRINK GROUT - PRE-MIXED, NON-METALLIC, CEMENT-BASED GROUT, MEETING THE REQUIREMENTS OF ASTM C827, ASTM C109 & CRD C-621, WITH A MINIMUM COMPRESSIVE STRENGTH OF 7000 PSI AT 28 DAYS.
7. PROVIDE SHORING/BRACING FOR A SAFE STRUCTURE UNTIL ALL FINAL CONNECTIONS ARE MADE. DESIGN SHALL BE BY STEEL ERECTOR.
8. PROVIDE MISCELLANEOUS PLATES, ANGLES AND ANCHORS AS SHOWN OR NOTED ON THE STRUCTURAL DRAWINGS
9. ALL CUTTING AND BLOCKING OF STEEL SHALL BE SHOWN ON SHOP DRAWINGS AND PERFORMED IN SHOP. FIELD BURNING IS NOT ALLOWED.
10. STRUCTURAL MEMBERS TO BE SHOP PRIMED AND FINISHED COATED WITH INDURON INDURETHANE ENAMEL
11. ALL HANGERS TO BE STAINLESS STEEL

ABC COKE
A Division of Drummond Company, Inc.
TARRANT, ALABAMA

REFERENCE	DWG. NO.
N/S PIPE BRIDGE	723-3740-0200
PROCESS WATER DECANTER TANK (WILPUTTE)	723-3630-0280
PIPING LIGHT OIL RECOVERY UNIT MISC SECTS	723-3640-0267
PIPING LIGHT OIL RECOVERY UNIT	723-3640-0266

REV	DESCRIPTION	CHECKED	DATE
A	ISSUED FOR REVIEW	DHM	01/31/17

DRAWN BY	JCP	01/31/17
CHECKED BY	DHM	01/31/17
APPROVED BY	SW	
FILE NAME	STR2-1	

Borton Lawson
ENGINEERING
ARCHITECTURE
www.borton-lawson.com

ABC COKE
TARRANT, ALABAMA

STRUCTURAL VIEWS AND DETAILS AREA 2
DRAIN COLLECTION (NAPHTHA) SUMP
SECTION VIEW A

CUSTOMER PROJECT NO 2016-2379-003
SCALE AS NOTED

STR2-1

REVISION A

BILL OF MATERIALS			LENGTH		WT
MARK	QUAN	DESCRIPTION	FT	INS	

NORTH

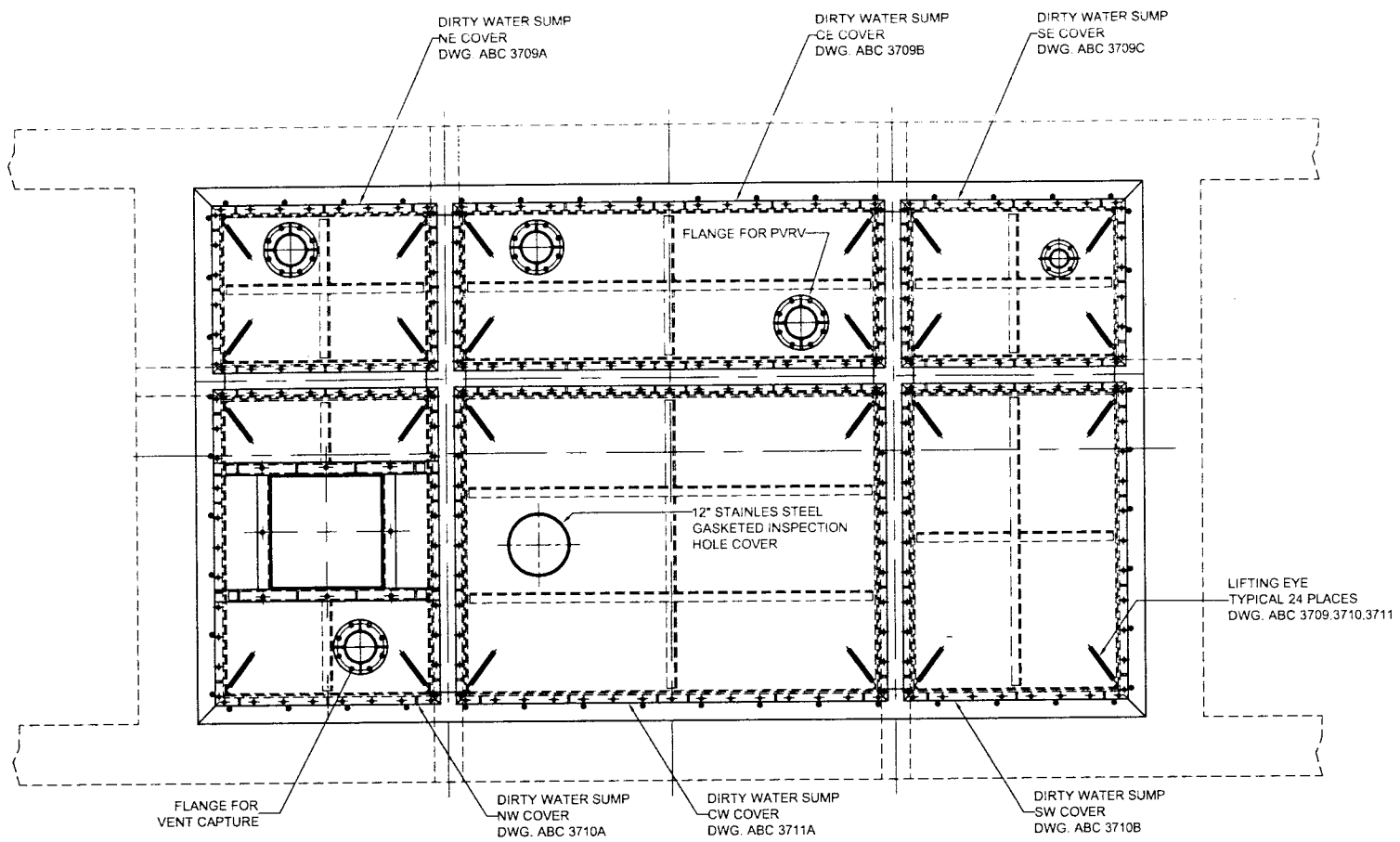

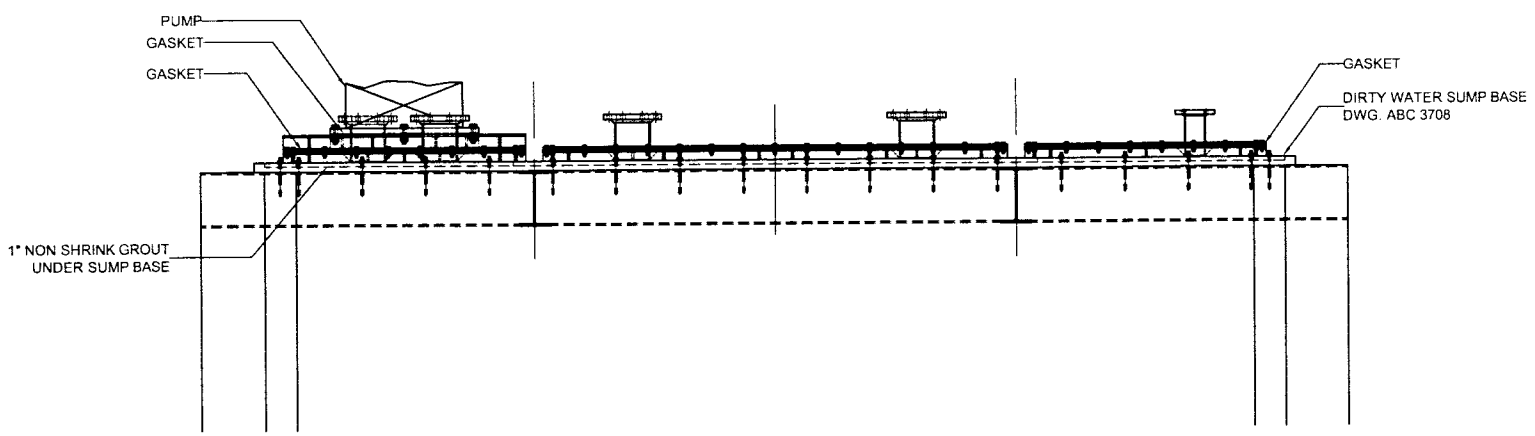

DRAWING NO.	DESCRIPTION
	REFERENCES

NO.	REVISIONS	MADE BY	CHECK BY	DATE	NO.	REVISIONS	DRAWN	MADE BY	CHECK BY	DATE

THIS PRINT AND ALL INFORMATION THEREON IS THE PROPERTY OF ALABAMA BY-PRODUCTS CORPORATION and is confidential and must not be made public or copied unless as authorized by them and is subject to return upon demand.

	BY	DATE
DRAWN	SMK	8-22-16
CHECKED		
APPROVED		
APPROVED		
ISSUED		

ALABAMA BY-PRODUCTS CORPORATION
FOUNDRY COKE • COAL • COAL CHEMICALS
COKE OVEN AND BY-PRODUCTS DIVISION
P. O. BOX 6507 – TARRANT BRANCH
BIRMINGHAM, ALABAMA 35217

DIRTY WATER SUMP
GEN ARRGT

DATE: 8-22-2016
SCALE: 1:16

ABC 3707

BILL OF MATERIALS			LENGTH		WT
MARK	QUAN	DESCRIPTION	FT	INS	

NOTES:
1. ALL JOINTS TO BE VEED AND WELDED AT 100%.
2. ALL MATERIAL TO BE 316 STAINLESS.
2. BASE MUST BE FLAT AND STRAIGHT. NO WARPING!
4. REMOVE ALL BURRS AND SHARP EDGES.
5. ANGLES MUST BE FULL WELDED AND GAS TIGHT.

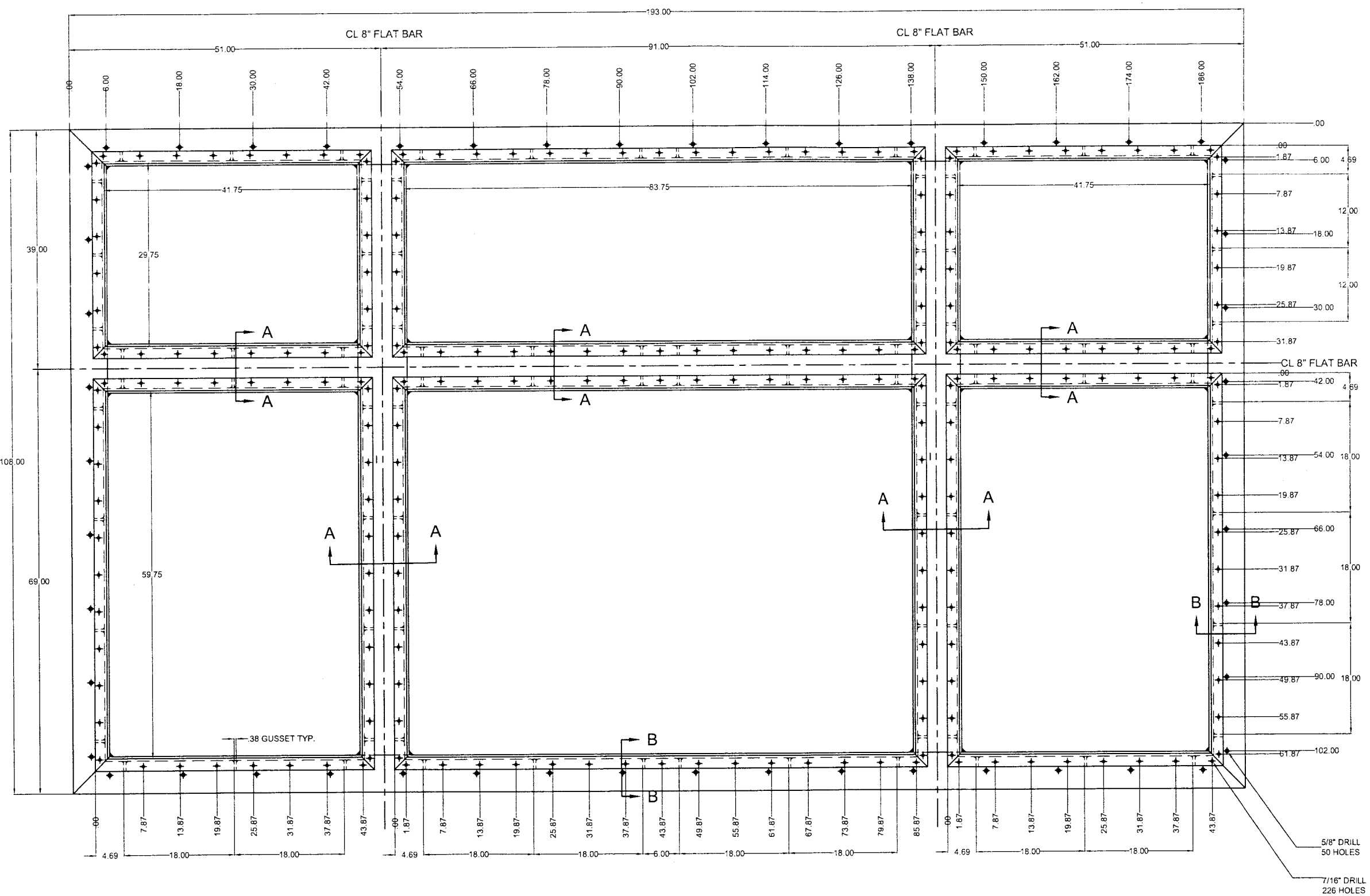

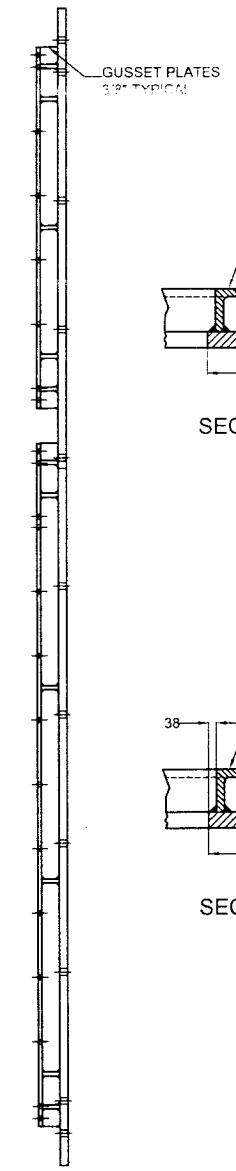

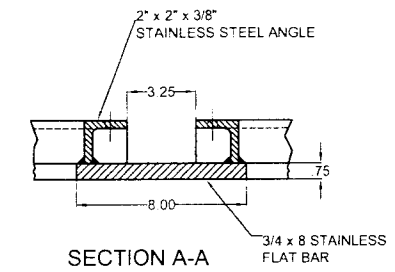

SECTION A-A

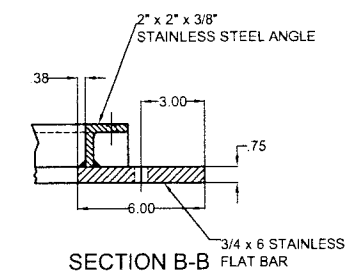

SECTION B-B

DRAWING NO.	DESCRIPTION	NO.	REVISIONS	MADE BY	CHECK BY	DATE	NO.	REVISIONS	MADE BY	CHECK BY	DATE
REFERENCES											

THIS PRINT AND ALL INFORMATION THEREON IS THE PROPERTY OF ALABAMA BY-PRODUCTS CORPORATION and is confidential and must not be made public or copied unless so authorized by them and is subject to return upon demand.

	BY	DATE
DRAWN	SMK	8-23-16
CHECKED		
APPROVED		
APPROVED		
ISSUED		

ALABAMA BY-PRODUCTS CORPORATION
FOUNDRY COKE • COAL • COAL CHEMICALS
COKE OVEN AND BY-PRODUCTS DIVISION
P. O. BOX 5507 – TARRANT BRANCH
BIRMINGHAM, ALABAMA 35217

DIRTY WATER SUMP
BASE

DATE: 8-23-16
SCALE: 1/8

ABC 3708

BILL OF MATERIALS			LENGTH		WT
MARK	QUAN	DESCRIPTION	FT	INS	

NOTES:
1. ALL MATERIAL TO BE 316 STAINLESS UNLESS NOTED.
2. COVER MUST BE FLAT AND STRAIGHT. NO WARPING!
3. REMOVE ALL BURRS AND SHARP EDGES.
4. SUPPORT ANGLES UNDER COVER MAY BE SKIP WELDED.
5. PIPE PROTRUSIONS MUST BE 100% WELDED BOTH SIDES TO BE GAS TIGHT.

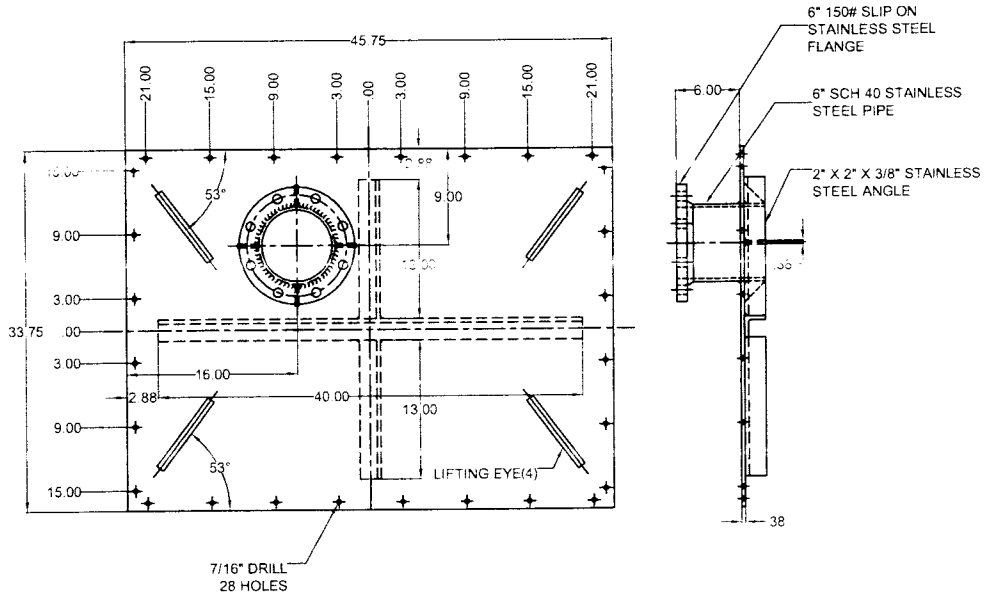

NW COVER
QTY: 1
MATERIAL: 316 STAINLESS

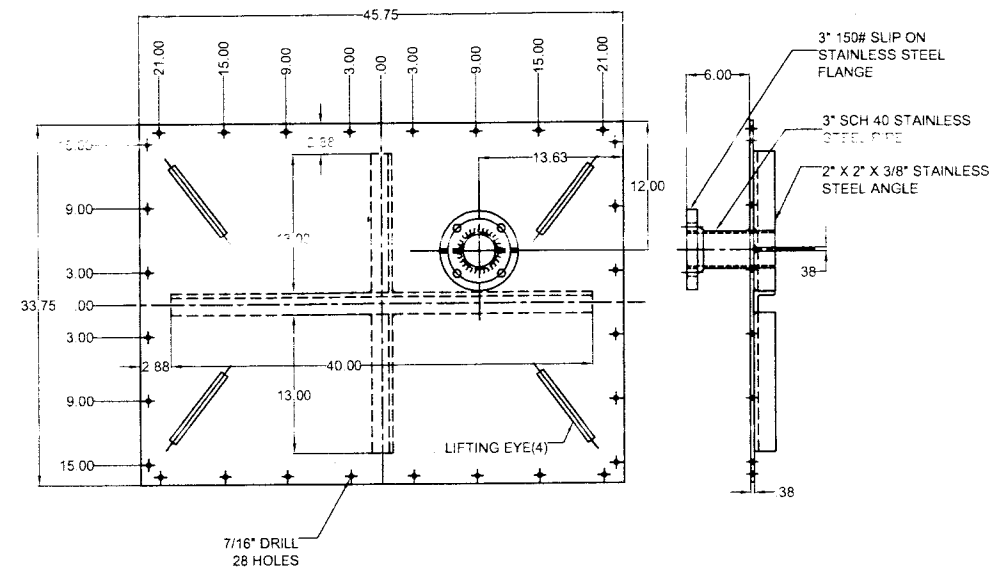

SW COVER
QTY: 1
MATERIAL: 316 STAINLESS

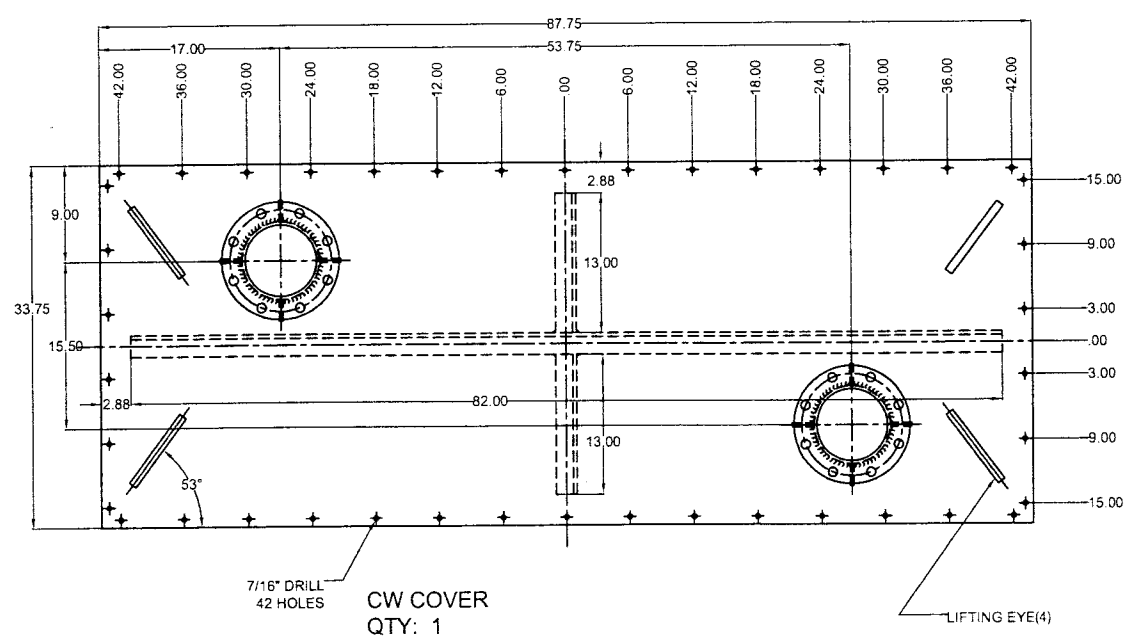

CW COVER
QTY: 1
MATERIAL: 316 STAINLESS

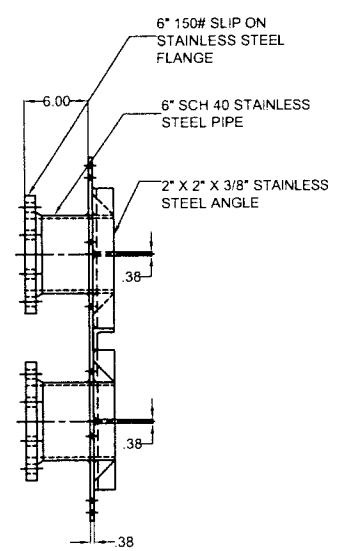

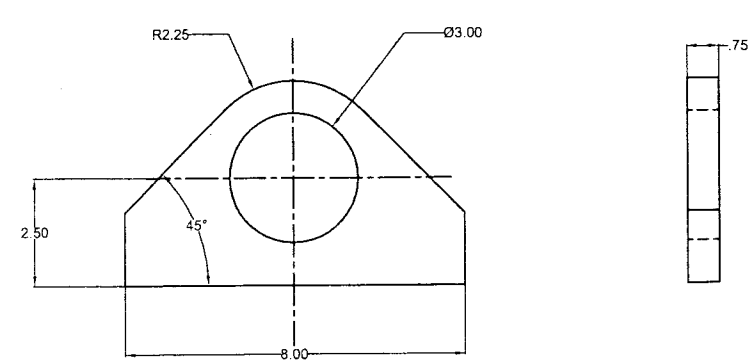

LIFTING EYE
QTY: 12
MATERIAL: 316 STAINLESS

DRAWING NO.	DESCRIPTION
	REFERENCES

NO.	REVISIONS	MADE BY	CHECK BY	DATE	NO.	REVISIONS	DRAWN	MADE BY	CHECK BY	DATE

THIS PRINT AND ALL INFORMATION THEREON IS THE PROPERTY OF ALABAMA BY-PRODUCTS CORPORATION and is confidential and must not be made public or copied unless so authorized by them and is subject to return upon demand.

	BY	DATE
DRAWN	SMK	8-23-16
CHECKED		
APPROVED		
APPROVED		
ISSUED		

ALABAMA BY-PRODUCTS CORPORATION
FOUNDRY COKE • COAL • COAL CHEMICALS
COKE OVEN AND BY-PRODUCTS DIVISION
P. O. BOX 6507 – TARRANT BRANCH
BIRMINGHAM, ALABAMA 35217

DIRTY WATER SUMP
COVER DETAILS

DATE 8-23-16
SCALE 1/8

ABC 3709

BILL OF MATERIALS			LENGTH		WT
MARK	QUAN	DESCRIPTION	FT	INS	

NOTES:
1. ALL MATERIAL TO BE 316 STAINLESS UNLESS NOTED.
2. COVER MUST BE FLAT AND STRAIGHT. NO WARPING!
3. REMOVE ALL BURRS AND SHARP EDGES.
4. SUPPORT ANGLES UNDER COVER MAY BE SKIP WELDED.
5. PIPE PROTRUSIONS MUST BE 100% WELDED BOTH SIDES TO BE GAS TIGHT.
6. PUMP MOUNT BASE TO BE100% WELDED BOTH SIDES TO BE GAS TIGHT.

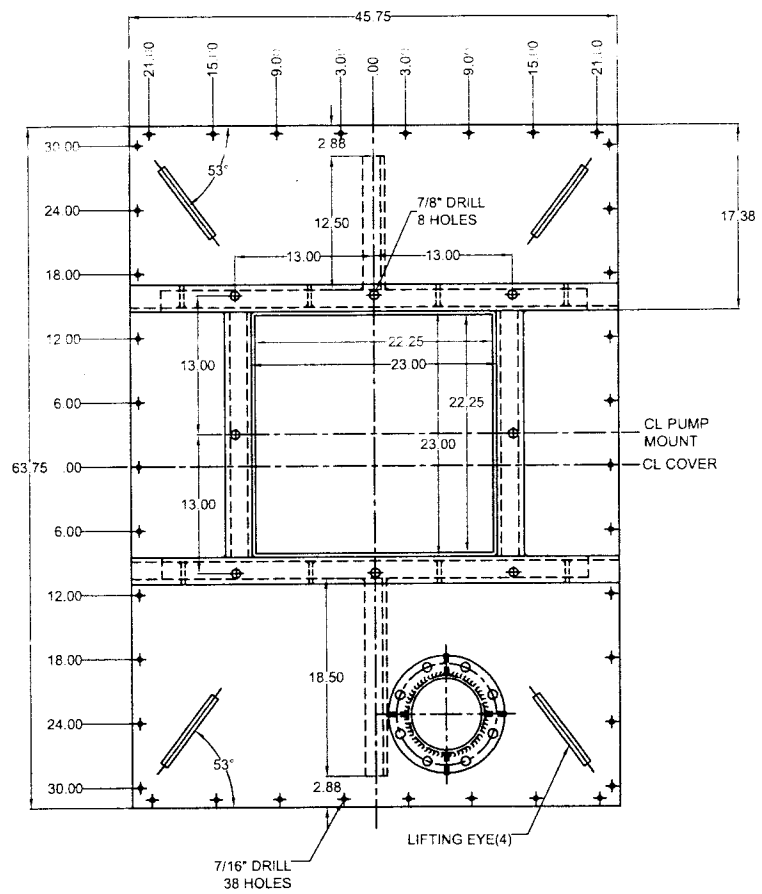

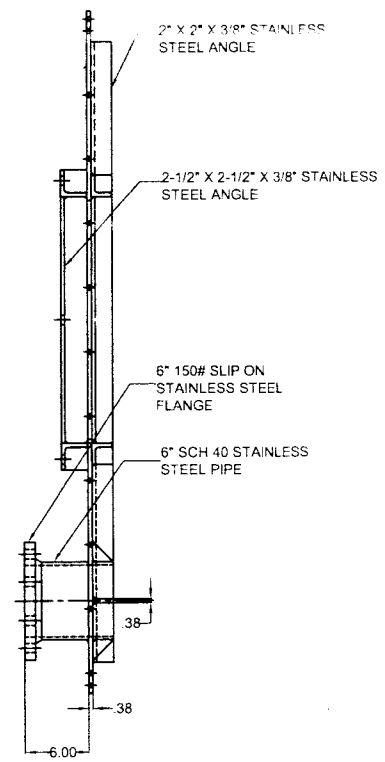

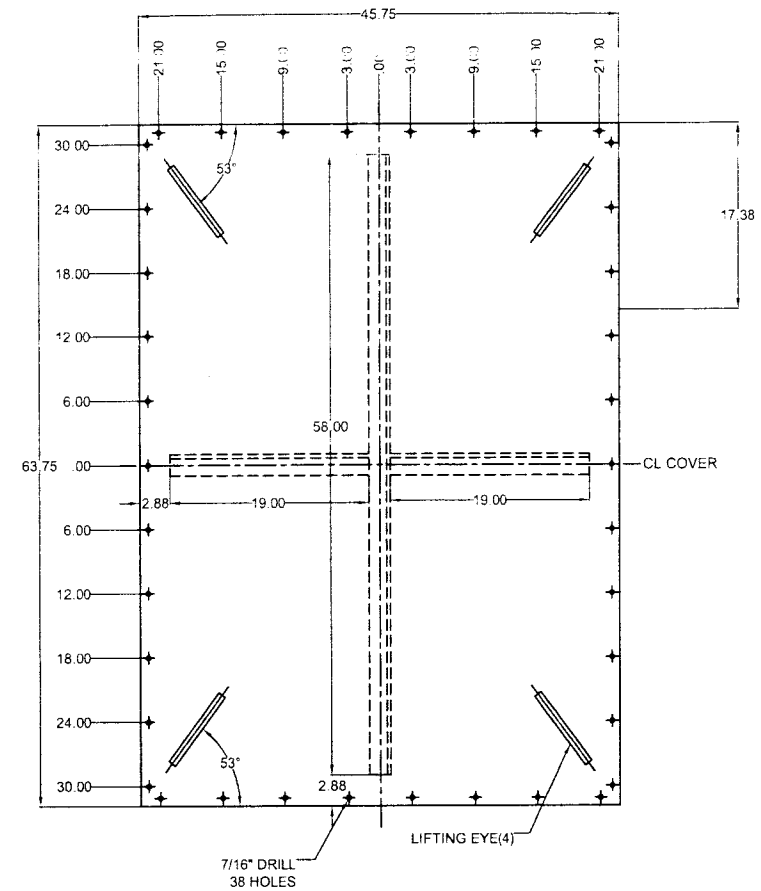

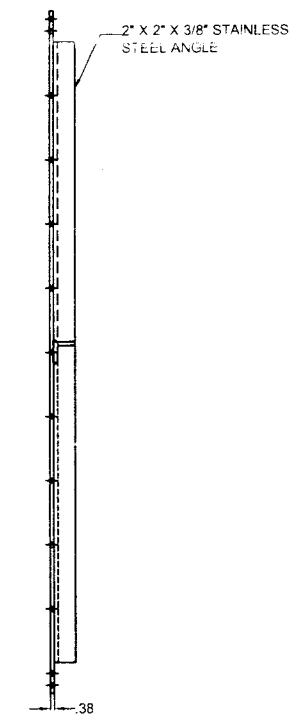

SE COVER
QTY: 1
MATERIAL: 316 STAINLESS

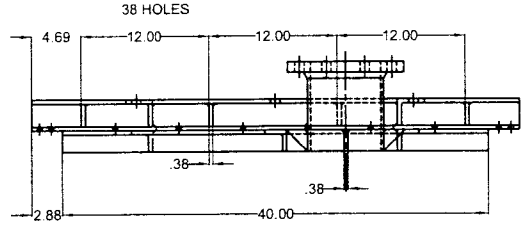

NE COVER
QTY: 1
MATERIAL: 316 STAINLESS

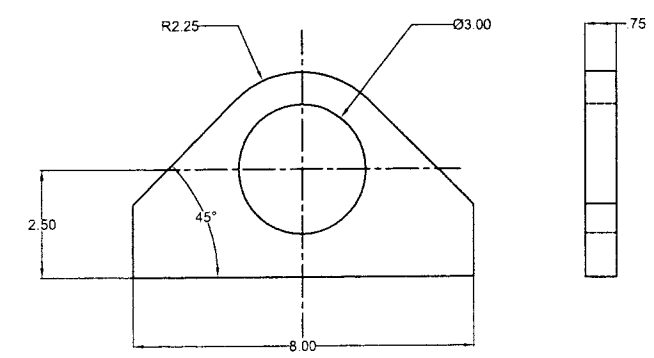

LIFTING EYE
QTY: 8
MATERIAL: 316 STAINLESS

DRAWING NO.	DESCRIPTION
REFERENCES	

NO.	REVISIONS	MADE BY	CHECK BY	DATE	NO.	REVISIONS	DRAWN	MADE BY	CHECK BY	DATE

THIS PRINT AND ALL INFORMATION THEREON IS THE PROPERTY OF ALABAMA BY-PRODUCTS CORPORATION and is confidential and must not be made public or copied unless as authorized by them and is subject to return upon demand.

	BY	DATE
DRAWN	SMK	8-25-16
CHECKED		
APPROVED		
APPROVED		
ISSUED		

ALABAMA BY-PRODUCTS CORPORATION
FOUNDRY COKE • COAL • COAL CHEMICALS
COKE OVEN AND BY-PRODUCTS DIVISION
P. O. BOX 5507 – TARRANT BRANCH
BIRMINGHAM, ALABAMA 35217

DIRTY WATER SUMP
COVER DETAILS

DATE: 8-25-16
SCALE: 1/8

ABC 3710

BILL OF MATERIALS			LENGTH		WT
MARK	QUAN	DESCRIPTION	FT	INS	

NOTES:
1. ALL MATERIAL TO BE 316 STAINLESS UNLESS NOTED.
2. COVER MUST BE FLAT AND STRAIGHT. NO WARPING!
3. REMOVE ALL BURRS AND SHARP EDGES.
4. SUPPORT ANGLES UNDER COVER MAY BE SKIP WELDED.
5. INSPECTION COVER TO BE WELDED 100% OB BOTH SIDES OF COVER TO BE GAS TIGHT.

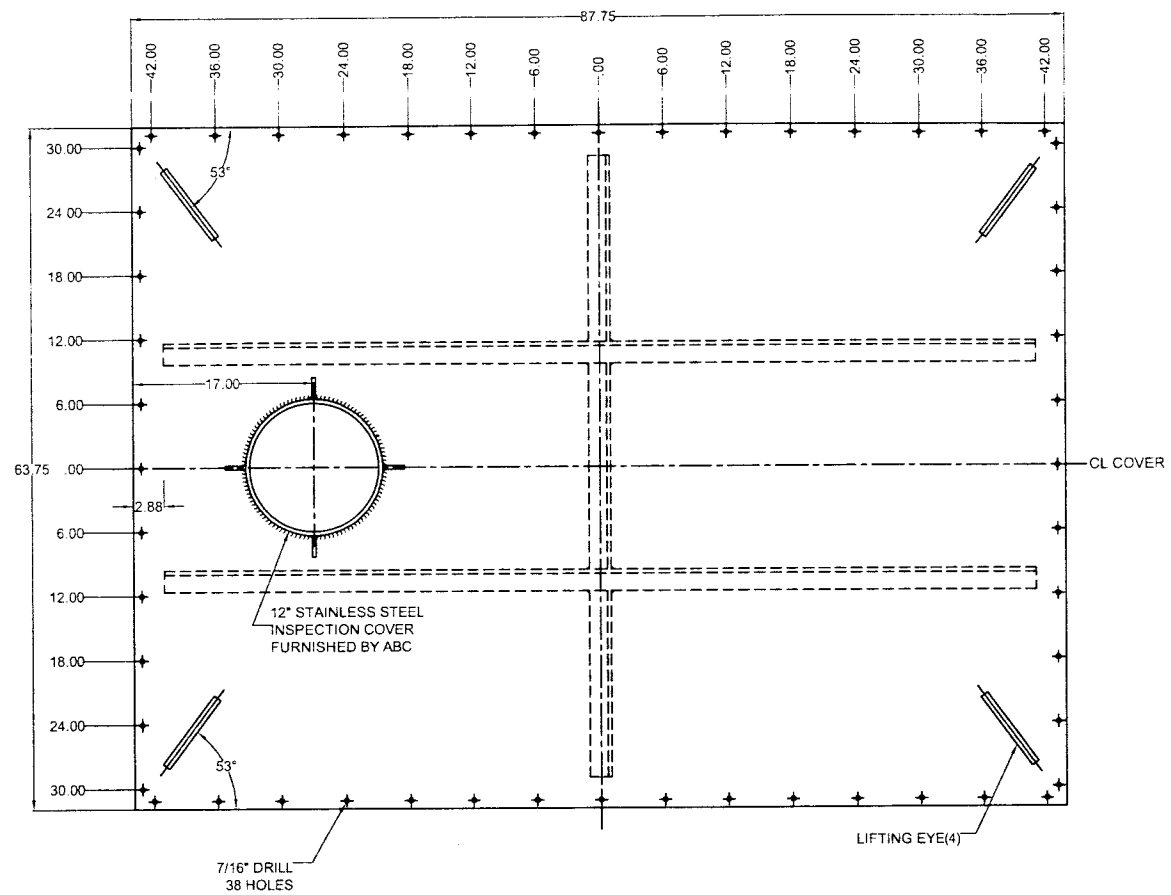

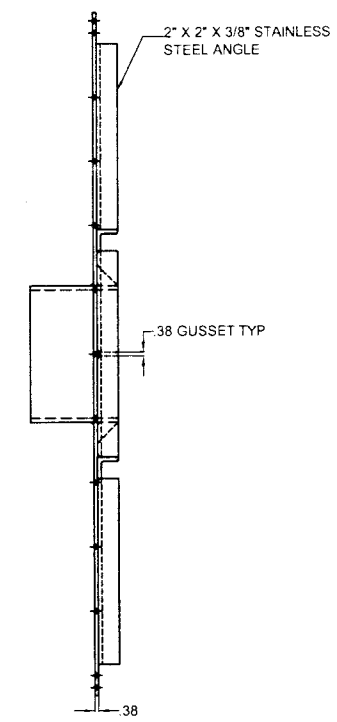

CE COVER
QTY: 1
MATERIAL: 316 STAINLESS

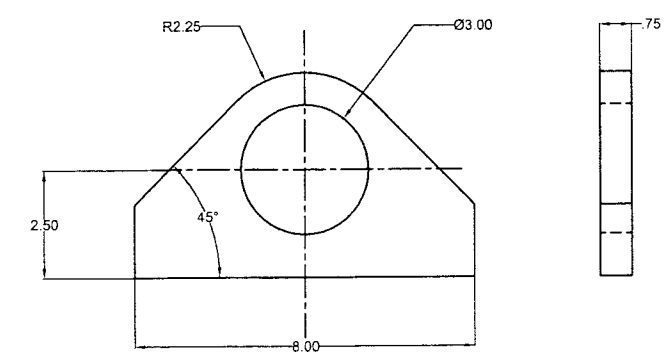

LIFTING EYE
QTY: 4
MATERIAL: 316 STAINLESS

DRAWING NO.	DESCRIPTION
REFERENCES	

NO.	REVISIONS	MADE BY	CHECK BY	DATE	NO.	REVISIONS	MADE BY	CHECK BY	DATE

THIS PRINT AND ALL INFORMATION THEREON IS THE PROPERTY OF ALABAMA BY-PRODUCTS CORPORATION and is confidential and must not be made public or copied unless so authorized by them and is subject to return upon demand.

	BY	DATE
DRAWN	SMK	8-25-16
CHECKED		
APPROVED		
APPROVED		
ISSUED		

ALABAMA BY-PRODUCTS CORPORATION
FOUNDRY COKE • COAL • COAL CHEMICALS
COKE OVEN AND BY-PRODUCTS DIVISION
P. O. BOX 8507 — TARRANT BRANCH
BIRMINGHAM, ALABAMA 35217

DIRTY WATER SUMP
COVER DETAILS

DATE: 8-25-16
SCALE: 1/8

ABC 3711

BILL OF MATERIALS					
MARK	QUAN	DESCRIPTION	LENGTH FT	LENGTH INS	WT

NORTH

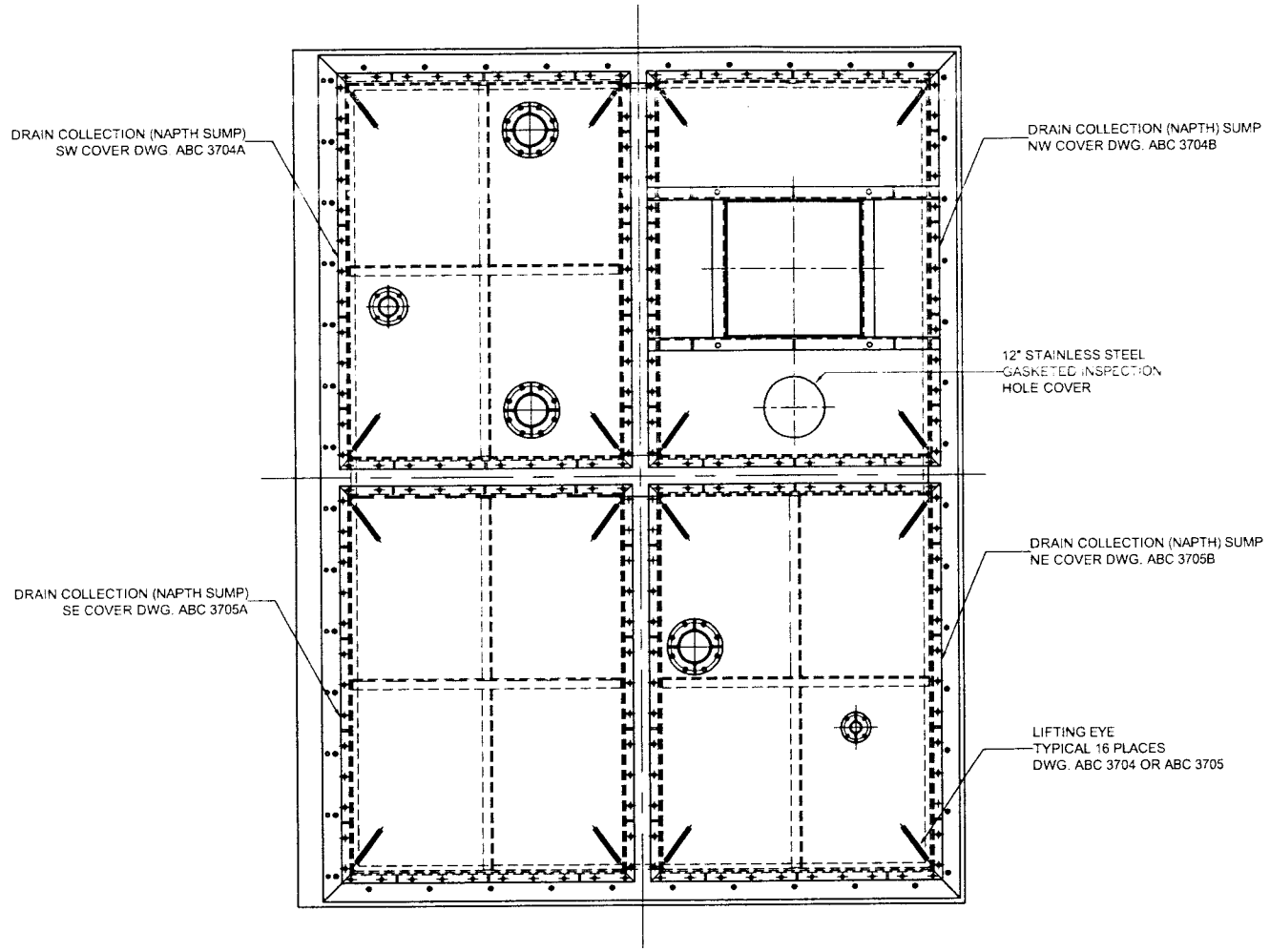

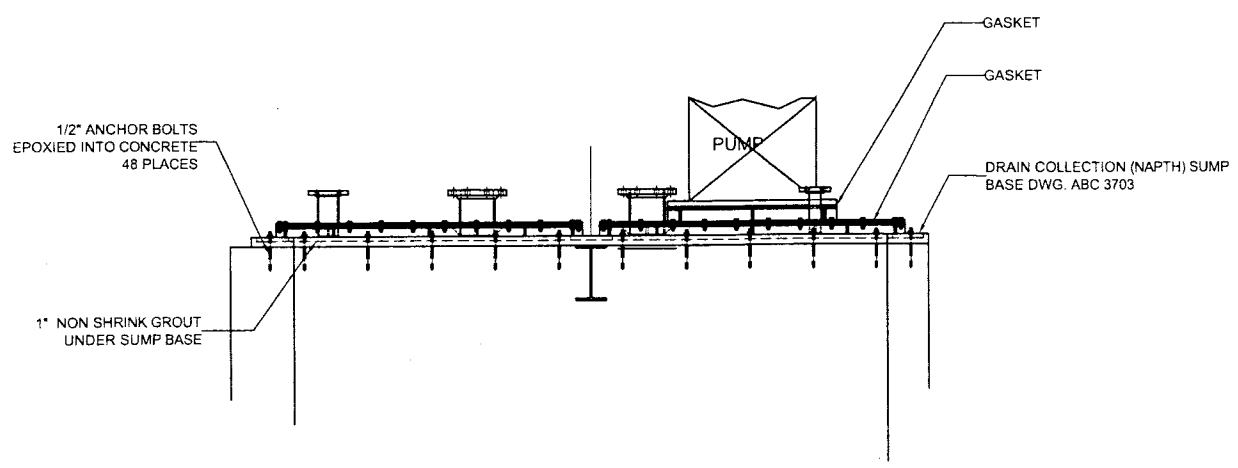

DRAWING NO.	DESCRIPTION
	REFERENCES

NO.	REVISIONS	MADE BY	CHECK BY	DATE	NO.	REVISIONS	DRAWN	MADE BY	CHECK BY	DATE

THIS PRINT AND ALL INFORMATION THEREON IS THE PROPERTY OF ALABAMA BY-PRODUCTS CORPORATION and is confidential and must not be made public or copied unless so authorized by them and is subject to return upon demand.

	BY	DATE
DRAWN		
CHECKED		
APPROVED		
APPROVED		
ISSUED		

ALABAMA BY-PRODUCTS CORPORATION
FOUNDRY COKE • COAL • COAL CHEMICALS
COKE OVEN AND BY-PRODUCTS DIVISION
P. O. BOX 6807 – TARRANT BRANCH
BIRMINGHAM, ALABAMA 35217

DRAIN COLLECTION (NAPTH) SUMP GEN ARRGT

DATE: 7-15-2016
SCALE: 1:16

ABC 3702

BILL OF MATERIALS			LENGTH		WT
MARK	QUAN	DESCRIPTION	FT	INS	

NOTES:
1. ALL JOINTS TO BE VEED AND WELDED AT 100%.
2. ALL MATERIAL TO BE 316 STAINLESS.
2. BASE MUST BE FLAT AND STRAIGHT. NO WARPING!
4. REMOVE ALL BURRS AND SHARP EDGES.
5. ANGLES MUST BE FULL WELDED AND GAS TIGHT.

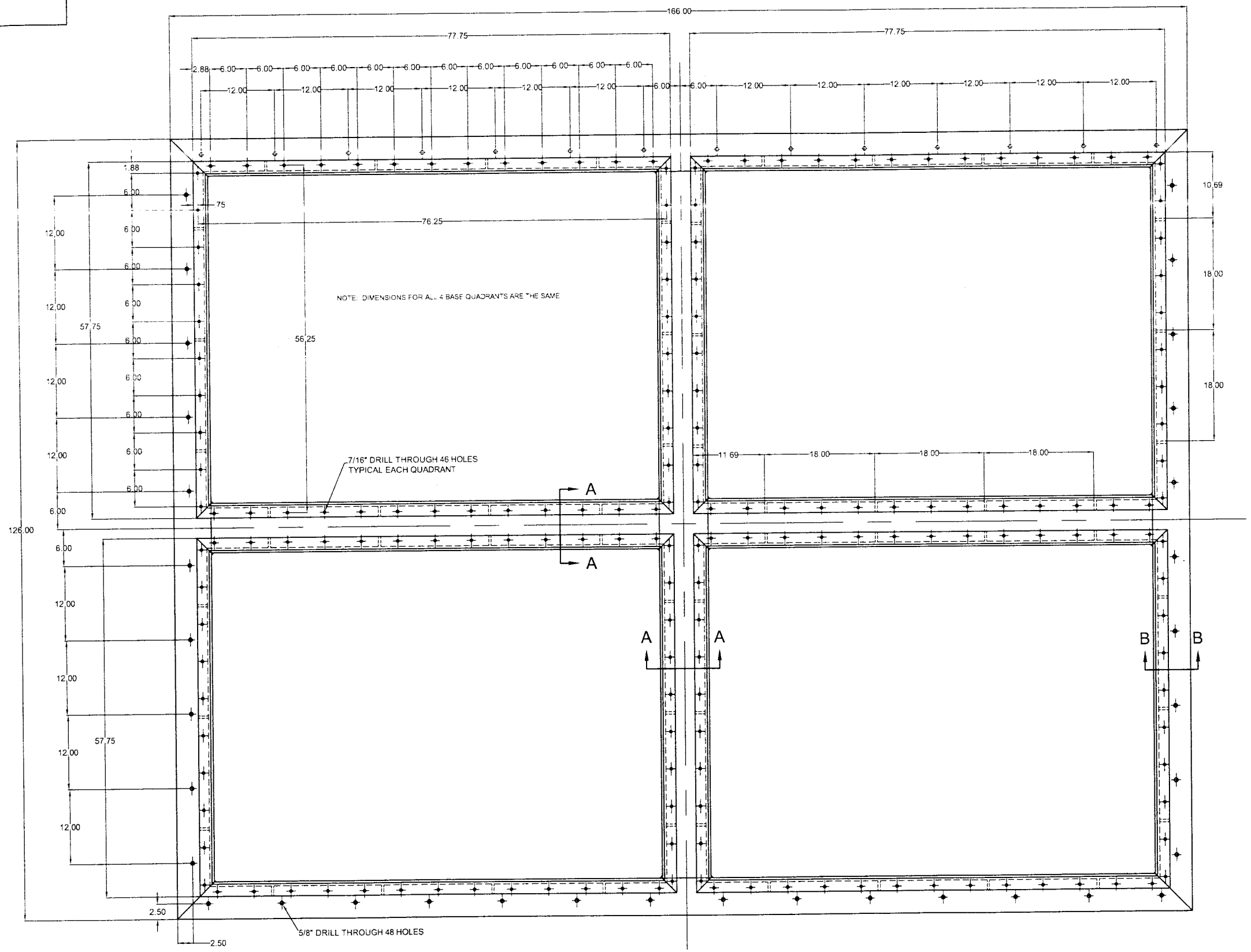

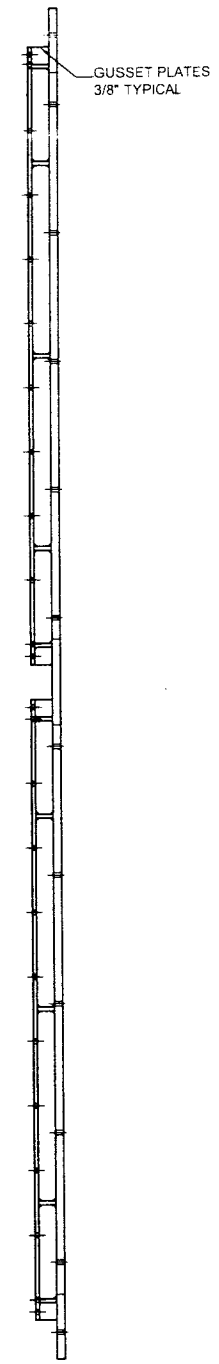

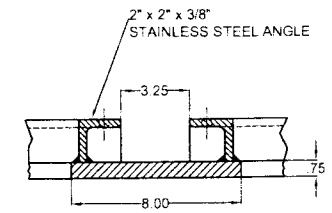

SECTION A-A

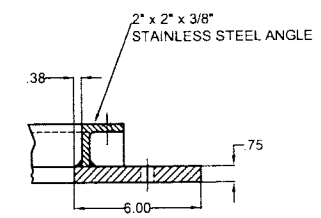

SECTION B-B

DRAWING NO.	DESCRIPTION
REFERENCES	

NO.	REVISIONS	MADE BY	CHECK BY	DATE	NO.	REVISIONS	DRAWN	MADE BY	CHECK BY	DATE

THIS PRINT AND ALL INFORMATION THEREON IS THE PROPERTY OF ALABAMA BY-PRODUCTS CORPORATION and is confidential and must not be made public or copied unless as authorized by them and is subject to return upon demand.

	BY	DATE
DRAWN	SMK	7-18-16
CHECKED		
APPROVED		
APPROVED		
ISSUED		

ALABAMA BY-PRODUCTS CORPORATION
FOUNDRY COKE • COAL • COAL CHEMICALS
COKE OVEN AND BY-PRODUCTS DIVISION
P. O. BOX 8507 – TARRANT BRANCH
BIRMINGHAM, ALABAMA 35217

DRAIN COLLECTION (NAPTH) SUMP BASE

DATE: 7-18-16
SCALE: 1:8

ABC 3703

BILL OF MATERIALS			LENGTH		WT
MARK	QUAN	DESCRIPTION	FT	INS	

NOTES:
1. ALL PROTRUSIONS TO BE FULL WELD ON BOTH SIDES OF 3/8" PLATE
2. ANGLE ON TOP SIDE OF NW COVER TO BE FULL WELD ALSO.
3. ANGLE ON NW COVER TOP MUST BE FLAT AND STRAIGHT
4. STAINLESS MANHOLE COVER TO BE FURNISHED BY ABC COKE.
5. COVERS MUST BE FLAT AFTER WELDING. NO WARPING!
6. REMOVE ALL SHARP CORNERS AND EDGES
7. ANGLE BRACING UNDER COVER MAY BE SKIP WELDED.

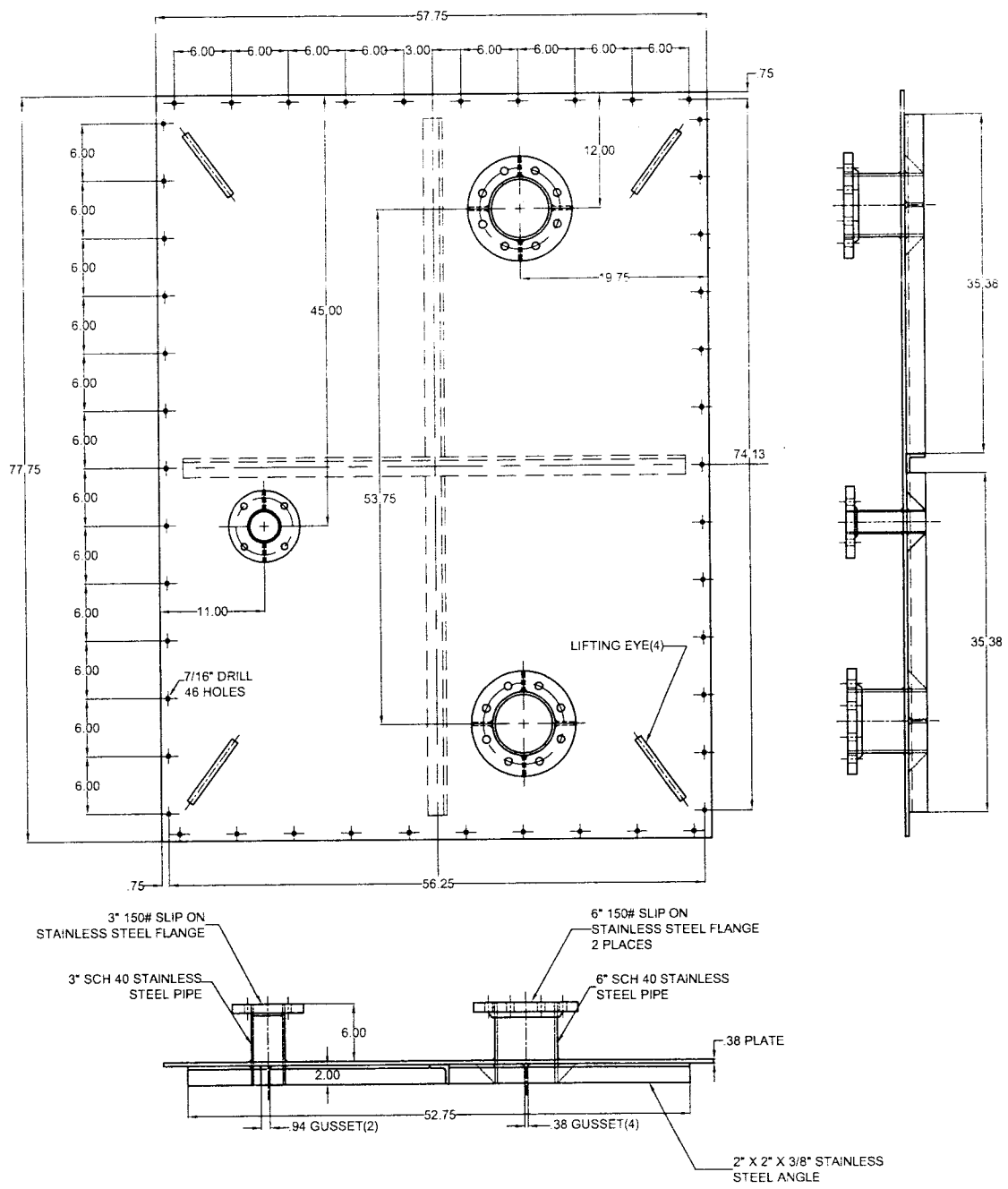

SW COVER

QTY: 1

MATERIAL: 316 STAINLESS

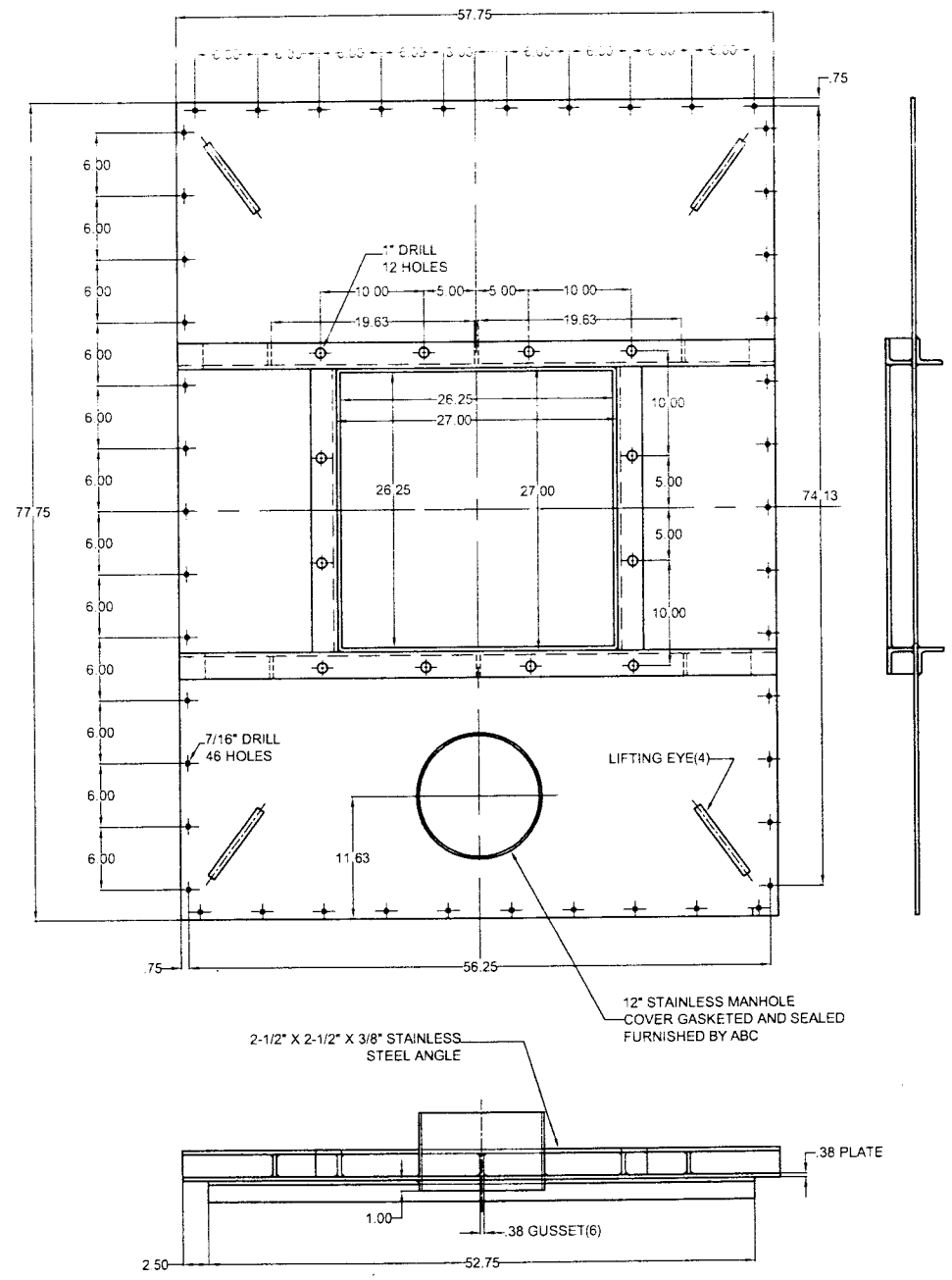

NW COVER

QTY: 1

MATERIAL: 316 STAINLESS

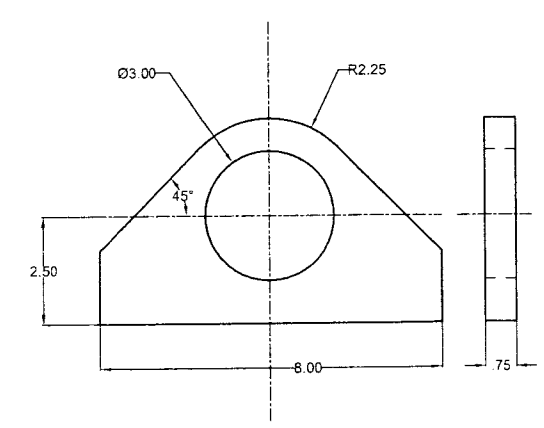

LIFTING EYE

QTY: 8

MATERIAL: 316 STAINLESS

DRAWING NO.	DESCRIPTION	NO.	REVISIONS	MADE BY	CHECK BY	DATE	NO.	REVISIONS	MADE BY	CHECK BY	DATE
	REFERENCES										

THIS PRINT AND ALL INFORMATION THEREON IS THE PROPERTY OF ALABAMA BY-PRODUCTS CORPORATION and is confidential and must not be made public or copied unless so authorized by them and is subject to return upon demand.

	BY	DATE
DRAWN	SMK	7-19-16
CHECKED		
APPROVED		
APPROVED		
ISSUED		

ALABAMA BY-PRODUCTS CORPORATION
FOUNDRY COKE • COAL • COAL CHEMICALS
COKE OVEN AND BY-PRODUCTS DIVISION
P. O. BOX 6507 — TARRANT BRANCH
BIRMINGHAM, ALABAMA 35217

DRAIN COLLECTION(NAPTH) SUMP COVERS

DATE: 7-19-2016
SCALE: 1/8

ABC 3704

* INDICATES ITEMS NOT SHOWN.
● INDICATES RECOMMENDED SPARE PARTS.

	No.	QTY.	NAME	DRAWING No. OR DESCRIPTION	PART No.
	28	1	THREADLOCKER	LOCTITE #271	23271
	29	6	ADJUSTING NUT	1 1/2-6 UNC HEX NUT	U24H5-V
	44	4	LOWER SCREEN FASTENER	A2.5SSSA107-2 (3/8-16 UNC X 1-3/4" LG STUD)	V3725
●	46	1	IMPELLER WASHER	A2SHA5046	25030
	77	1	SHAFT GUARD	47-3710	ZBSG47-3710
	78	2	HOSE CLAMP	MCMASTER-CARR #5322K37	218524
	79	1	VAPOR SLEEVE	47-3711 - VITON	218525
	80	1	EXPANSION JOINT	3" - DINATECNICA - JEBT - BROWN	218522
	93	3	ADJUSTING WASHER	1-1/2" LOCK WASHER	U24-14-Z
●	95	1	DISCHARGE PIPE GASKET	C3SHA5095 - GARLOCK 3300	218532
	202	1	BEARING COLUMN BASE	D4SRK5002-2	21903
	206	1	SHAFT W LOCKNUT & KEY	D4SHKC5002-6	21916
	216	6	COLUMN BASE FASTENER	5/8"-11 UNC X 3-1/2" LG HEX SCREW	U10H1-14V
		6		5/8" LOCK WASHER	U10-14-Z
	221	1	FLINGER	A4SHA5021	46740
*	TAG	1	TAG KIT	A389934	ZTAGKITVERTGMS

	No.	QTY.	NAME	DRAWING No. OR DESCRIPTION	PART No.
	1	1	PEDESTAL	47-3706	218521
	2	1	BEARING ASSEMBLY	47-3705	GBA4-51B
●	3	1	IMPELLER	D47-1926	23077
●	4	1	LOWER SCREEN	D47-1899	23055
●	5	1	UPPER SCREEN	D4SHB5005	24929
	6	1	AGITATOR SHAFT	C47-1901	23076
●	7	1	COVER PLATE	D3SNA5007	25531
●	8	1	AGITATOR	D47-1900	23052
	9	4	UPPER SCREEN FASTENER	3/8-16 UNC X 1" LG HEX SCREW	U6H1-4S
		4		3/8" FLAT WASHER	U6-11-S
		4		3/8" LOCK WASHER	U6-14-S
●	10	1	CASING	D3SNA5010	21607
*	11	5	COVER PLATE/DISCH PIPE FASTENER	3/4-10 UNC 1-3/4" LG HEX SCREW	V0453
		5		3/4" LOCK WASHER	U12-14-S
	12	13	PEDESTAL/CASING FASTENER	3/4-10 UNC X 4-1/2" LG HEX SCREW	V0489
		13		3/4-10 UNC HEX NUT	U12H5-S
		13		3/4" LOCK WASHER	U12-14-S
●	13	2	O-RING	#2-222 - VITON	35T38V222
	23	4	LOWER SCREEN FASTENER	3/8-16 UNC HEX NUT	U6H5-S
	24	4	LOWER SCREEN FASTENER	3/8" LOCK WASHER	U6-14-S
	25	8	EXPANSION JOINT FASTENER	5/8-11 UNC X 3-1/4" LG HEX SCREW	U10H1-13S
		8		5/8-11 UNC HEX NUT	U10H5-S
		16		5/8" FLAT WASHER	U10-11-S
	26	1	DISCHARGE PIPE	47-3709	218523

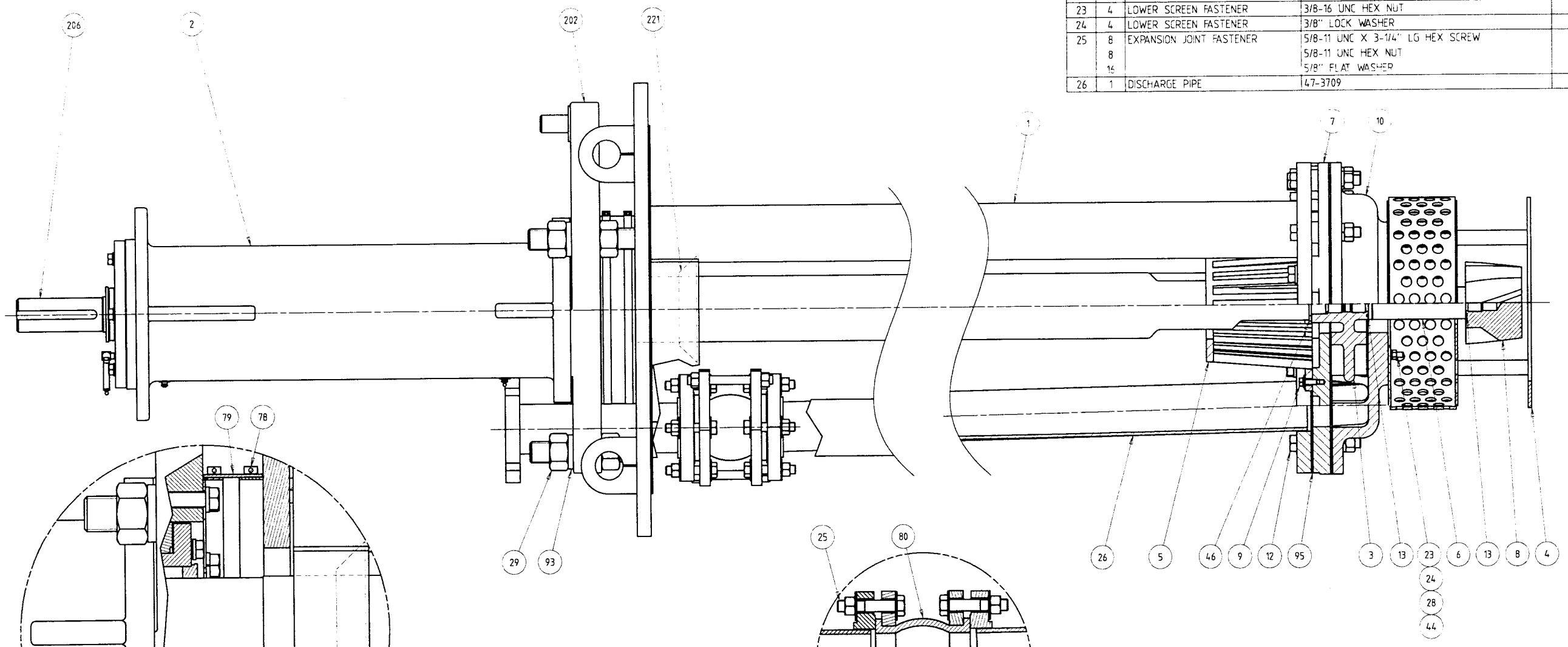

DETAIL OF VAPOR SLEEVE AREA

DETAIL OF EXPANSION JOINT AREA

REV	DESCRIPTION	DATE	REF NO	BY	CHK
1	ADDED DETAIL VIEWS OF VAPOR SLEEVE AREA & EXPANSION JOINT AREA	12JAN2007	EXHOTDESMAD	EAK	KDS

OFFICE OF ORIGIN
MADISON

SCALE --

APP	SG
CHK	KDS
DRN	E. KISTER
DATE	12DEC2006

Copyright © Weir Slurry Group, Inc. 2006
Weir Slurry Group, Inc. the Company, is the owner of the copyright and all confidential information in this drawing.
The drawing must not be copied in whole or in part in any form or by any means, nor the information in it must not be disclosed to any person or used for any purpose other than the specific purpose for which it has been provided without the prior written consent of the Company.

PRODUCT
WARMAN®
Centrifugal Slurry Pumps

WEIR MINERALS

TITLE
3SN4-5100A X 72" LG - HI CHROME, WITH AGITATOR, INPRO SEALS, LOWER DISCHARGE CONNECTION AND VAPOR SLEEVE

3SN45172CA5268
COMPONENTS DIAGRAM

SHEET SIZE A2 | DRAWING NO. A395240 | REV. 1

SHEET 1 OF 1

* INDICATES ITEMS NOT SHOWN
@ RECOMMENDED SPARE PARTS

No.	QTY.	NAME	DRAWING No. OR DESCRIPTION	PART No.
28	1	THREADLOCKER	LOCTITE #271	23271
29	6	ADJUSTING NUT	1 1/4-7 UNC HEX NUT	U20H5 V
44	6	LOWER SCREEN FASTENER	A2.5SSSA107-2 (3/8-16 UNC X 1-3/4 LG	V3725
	6		3/8-16 UNC HEX NUT	U6H5 S
	6		3/8" LOCK WASHER	U6-14-S
@ 46	1	IMPELLER WASHER	A2SHA5046	25030
77	1	SHAFT GUARD	47-3715	ZBSG47-3715
78	2	HOSE CLAMP	MCMASTER-CARR #5322K37	218524
79	1	VAPOR SLEEVE	47-3711 - VITON	218525
80	1	EXPANSION JOINT	1-1/2" - DINATECNICA - JEBT - BROWN	218529
93	3	ADJUSTING WASHER	1 1/4" LOCK WASHER	[illegible]
@ 95	1	DISCHARGE PIPE GASKET	A1.5SHA5095 - GARLOCK 3300	218533
202	1	BEARING COLUMN BASE	D2SRK5002-2	21133
206	1	SHAFT W/ LOCKNUT & KEY	D2SHKB5002-6	22120
216	6	COLUMN BASE FASTENER	5/8-11 UNC X 1-1/2" LG STUD	[illegible]
	10		5/8-11 UNC HEX NUT	U10H5 V
	6		5/8" LOCK WASHER	U10-14-Z
221	1	FLINGER	A2SHA5002-21	22053
TAG	1	TAG KIT	A389934	ZTAGKITVERTGMS

No.	QTY.	NAME	DRAWING No. OR DESCRIPTION	PART No.
1	1	PEDESTAL	47-3716	218528
2	1	BEARING ASSEMBLY	47-3704	GBA251B
@ 3	1	IMPELLER	C47-1932	23263
@ 4	1	LOWER SCREEN	D47-1899	23055
@ 5	1	UPPER SCREEN	D2SHA5005	21942
6	1	AGITATOR SHAFT	C47-1901	23076
@ 7	1	COVER PLATE	D1.5SNA5007	21952
@ 8	1	AGITATOR	D47-1912	23075
9	4	UPPER SCREEN FASTENER	3/8-16 UNC X 1" LG HEX SCREW	U6H1-4S
	4		3/8" FLAT WASHER	U6-11 S
	4		3/8" LOCK WASHER	U6-14 S
@ 10	1	CASING	D1.5SNA5010	21959
11	1	DISCHARGE PIPE FASTENER	5/8-11 UNC X 1-1/2" LG HEX SCREW	U10H1-6S
	1		5/8" LOCK WASHER	U10-14 S
12	11	CASING FASTENER	5/8-11 UNC X 1-1/2" LG HEX SCREW	U10H1-4S
	10		5/8-11 UNC HEX NUT	U10H5-S
	10		5/8" LOCK WASHER	U10-14-S
@ 13	2	O-RING	#2-222 - VITON	35T3BV222
25	8	EXPANSION JOINT FASTENER	1/2-13 UNC X 2-1/2" LG HEX SCREW	U8H1-10V
	8		1/2-13 UNC HEX NUT	U8H5 S
	16		1/2" FLAT WASHER	U8-11 S
26	1	DISCHARGE PIPE	47-3717	218530

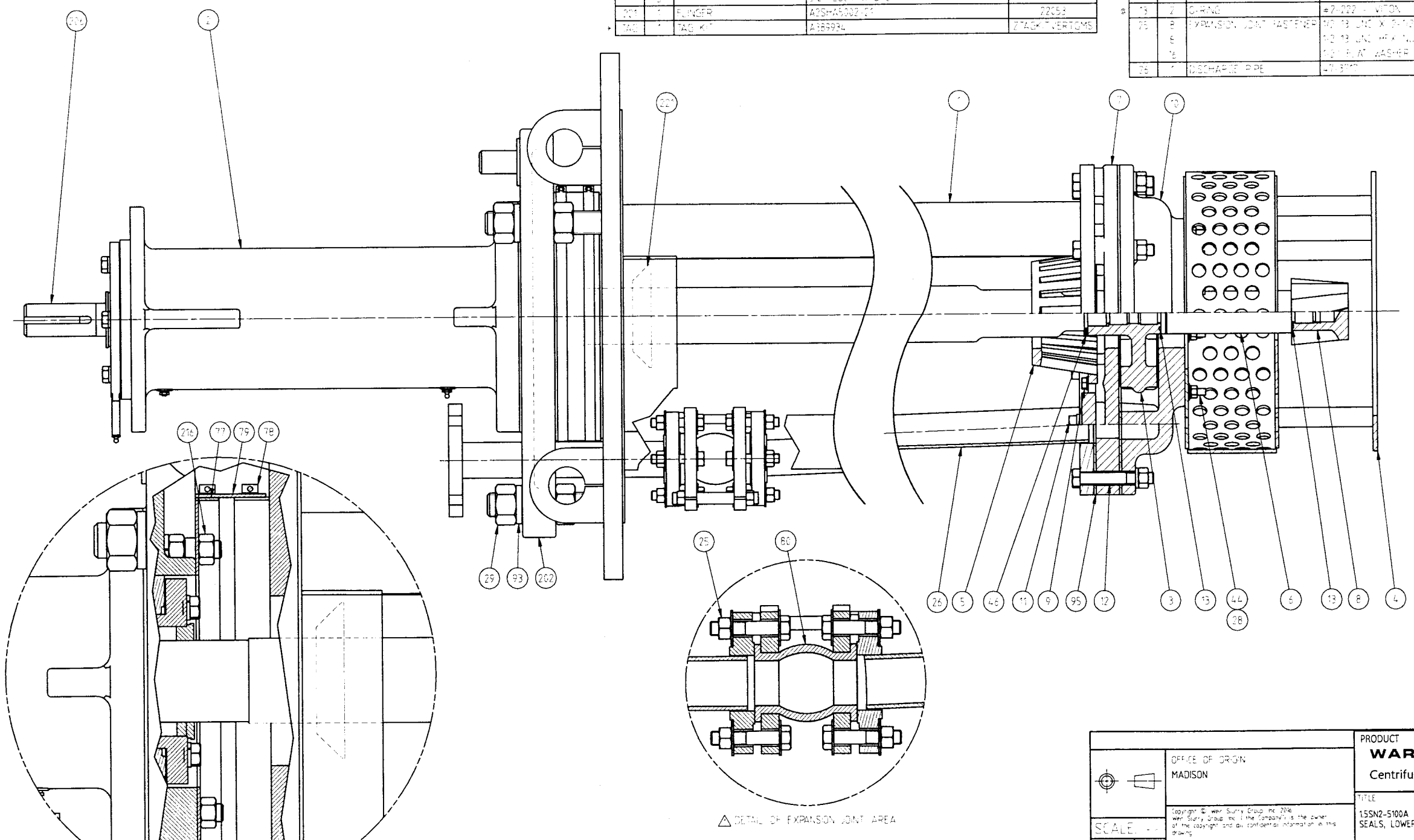

△ DETAIL OF VAPOR SEAL AREA

△ DETAIL OF EXPANSION JOINT AREA

REV	DESCRIPTION	DATE	REF NO	BY	CHK
1	ADDED DETAIL VIEWS OF VAPOR SEAL AREA & EXPANSION JOINT AREA	11JAN2017	ECN127363MAD	EAK	KDS

OFFICE OF ORIGIN
MADISON

Copyright © Weir Slurry Group Inc 2016
Weir Slurry Group Inc ("the Company") is the owner of the copyright and all confidential information in this drawing.
The drawing must not be copied in whole or in part, in any form or by any means and the information in it must not be disclosed to any person or used for any purpose other than the specific purpose for which it has been provided, without the prior written consent of the Company.

SCALE	- -
APP.	GG
CHK.	KDS
DRN.	E. KISTER
DATE	13DEC2016

SHEET 1 OF 1

PRODUCT
WARMAN®
Centrifugal Slurry Pumps

WEIR MINERALS

TITLE
1.5SN2-5100A X 60" LG - HIGH CHROME, WITH AGITATOR, INPRO SEALS, LOWER DISCHARGE CONNECTION AND VAPOR SEAL

1.5SN25160CA268
COMPONENTS DIAGRAM

SHEET SIZE	DRAWING No	REVISION
A2	A395241	1

UNIT_CODE	TAG_ NUMBER	EQUITYPE_DESC	CONFIG_DESC	SERVICE_DESC	ACCESS_DESC	CLOSED_VENT _SYSTEM	ROUTE	LOCATION	LEVEL	SIZE	IFSTYPE_DESC	ATTEMPT_A LLOWED	UNDER_300_H OURS_SERVIC E	POTENTIAL_ OPEN_END	GROUP_DESC	PRODUCT_DESC	DATE_ADDED	DATE_IN_SERVICE	TECH_DESC
COKE	B1	Flange	Standard Service	Gas	Accessible	FALSE	31	36" ROUND ACCESS HATCH IN SULFATE BUILDING	1P4	36	Yes, equipment can be isolated from service	FALSE	FALSE	FALSE	40 CFR 61 Subpart L	UNCLASSIFIED	28-Oct-16	12-Nov-16	ARAN PARKER
COKE	B10	Valve	Externally Actuated	Vacuum Service	Unsafe to Monitor	FALSE	0	3" & (2) 2" VALVES & EXPANSION JOINT GAS LINE @ SATURATOR W/	4PR0	3	Yes, equipment can be isolated from service	FALSE	FALSE	FALSE	40 CFR 61 Subpart L	UNCLASSIFIED	28-Oct-16	12-Nov-16	ARAN PARKER
COKE	B100	Valve	Externally Actuated	Vacuum Service	Accessible	FALSE	180	GAS OUTLET NORTH PRIMARY COOLER W/1FL & 3WC	4P-2	36	Yes, equipment can be isolated from service	FALSE	FALSE	FALSE	40 CFR 61 Subpart L	UNCLASSIFIED	28-Oct-16	18-Nov-16	ARAN PARKER
COKE	B101	Flange	Standard Service	Vacuum Service	Accessible	FALSE	943	MANHOLE SOUTH PRIMARY COOLER TOP W/1FL & 2WC	4P1	24	Yes, equipment can be isolated from service	FALSE	FALSE	FALSE	40 CFR 61 Subpart L	UNCLASSIFIED	28-Oct-16	18-Nov-16	ARAN PARKER
COKE	B102	Valve	Externally Actuated	Vacuum Service	Accessible	FALSE	944	GAS OUTLET SOUTH PRIMARY COOLER W/1FL & 3WC	4P-2	36	Yes, equipment can be isolated from service	FALSE	FALSE	FALSE	40 CFR 61 Subpart L	UNCLASSIFIED	28-Oct-16	18-Nov-16	ARAN PARKER
COKE	B103	Valve	Externally Actuated	Gas	Accessible	FALSE	885	24" VALVE UNDERFIRE MAIN @ SATURATOR W/2FL & 3WC	00	24	Yes, equipment can be isolated from service	FALSE	FALSE	FALSE	40 CFR 61 Subpart L	UNCLASSIFIED	28-Oct-16	19-Nov-16	ARAN PARKER
COKE	B104	Valve	Externally Actuated	Gas	Accessible	FALSE	883	24" VALVE UNDERFIRE MAIN @ SATURATOR W/2FL & 5WC	00	24	Yes, equipment can be isolated from service	FALSE	FALSE	FALSE	40 CFR 61 Subpart L	UNCLASSIFIED	28-Oct-16	19-Nov-16	ARAN PARKER
COKE	B105	Valve	Externally Actuated	Gas	Accessible	FALSE	884	16" VALVE UNDERFIRE MAIN @ SATURATOR W/2FL & 8WC	04	16	Yes, equipment can be isolated from service	FALSE	FALSE	FALSE	40 CFR 61 Subpart L	UNCLASSIFIED	28-Oct-16	19-Nov-16	ARAN PARKER
COKE	B106	Valve	Externally Actuated	Gas	Accessible	FALSE	886	12" VALVE UNDERFIRE MAIN @ SATURATOR W/2FL & 4WC	08	12	Yes, equipment can be isolated from service	FALSE	FALSE	FALSE	40 CFR 61 Subpart L	UNCLASSIFIED	28-Oct-16	19-Nov-16	ARAN PARKER
COKE	B107	Valve	Externally Actuated	Gas	Accessible	FALSE	888	4" VALVE UNDERFIRE MAIN @ SATURATOR W/6FL & 15WC	08	4	Yes, equipment can be isolated from service	FALSE	FALSE	FALSE	40 CFR 61 Subpart L	UNCLASSIFIED	28-Oct-16	19-Nov-16	ARAN PARKER
COKE	B108	Valve	Externally Actuated	Gas	Accessible	FALSE	889	4" & 1" VALVE UNDERFIRE MAIN @ SATURATOR W/3FL, 5WC & 2SC	02	4	Yes, equipment can be isolated from service	FALSE	FALSE	FALSE	40 CFR 61 Subpart L	UNCLASSIFIED	28-Oct-16	19-Nov-16	ARAN PARKER
COKE	B108a	Valve	Externally Actuated	Gas	Accessible	FALSE	890	1" VALVE UNDERFIRE MAIN @ SATURATOR W/3FL, 5WC & 2SC	02	1	Yes, equipment can be isolated from service	FALSE	FALSE	FALSE	40 CFR 61 Subpart L	UNCLASSIFIED	28-Oct-16	19-Nov-16	ARAN PARKER
COKE	B109	Valve	Externally Actuated	Gas	Accessible	FALSE	896	20" VALVE UNDERFIRE MAIN @ SATURATOR W/2FL & 2WC	04	20	Yes, equipment can be isolated from service	FALSE	FALSE	FALSE	40 CFR 61 Subpart L	UNCLASSIFIED	28-Oct-16	19-Nov-16	ARAN PARKER
COKE	B109A	Valve	Externally Actuated	Gas	Accessible	FALSE	897	20" VALVE UNDERFIRE MAIN @ SATURATOR W/2FL & 2WC	04	0.5	Yes, equipment can be isolated from service	FALSE	FALSE	FALSE	40 CFR 61 Subpart L	UNCLASSIFIED	19-Nov-16	19-Nov-16	ARAN PARKER
COKE	B10a	Valve	Externally Actuated	Vacuum Service	Unsafe to Monitor	FALSE	0	2" VALVES & EXPANSION JOINT GAS LINE @ SATURATOR W/5FL, 13W	4PR0	2	Yes, equipment can be isolated from service	FALSE	FALSE	FALSE	40 CFR 61 Subpart L	UNCLASSIFIED	28-Oct-16	12-Nov-16	ARAN PARKER
COKE	B10b	Valve	Externally Actuated	Vacuum Service	Unsafe to Monitor	FALSE	0	2" VALVES & EXPANSION JOINT GAS LINE @ SATURATOR W/5FL, 13W	4PR0	2	Yes, equipment can be isolated from service	FALSE	FALSE	FALSE	40 CFR 61 Subpart L	UNCLASSIFIED	28-Oct-16	12-Nov-16	ARAN PARKER
COKE	B11	Valve	Externally Actuated	Vacuum Service	Unsafe to Monitor	FALSE	0	3" VALVES & EXPANSION JOINT GAS LINE @ PRIMARY COOLERS W	4PR0	3	Yes, equipment can be isolated from service	FALSE	FALSE	FALSE	40 CFR 61 Subpart L	UNCLASSIFIED	28-Oct-16	12-Nov-16	ARAN PARKER
COKE	B110	Valve	Externally Actuated	Gas	Accessible	FALSE	898	24" VALVE UNDERFIRE MAIN @ SATURATOR W/4FL & 9WC	06	24	Yes, equipment can be isolated from service	FALSE	FALSE	FALSE	40 CFR 61 Subpart L	UNCLASSIFIED	28-Oct-16	19-Nov-16	ARAN PARKER
COKE	B111	Valve	Externally Actuated	Gas	Accessible	FALSE	894	20" VALVE UNDERFIRE MAIN TO BECKERS W/2FL & 2WC	03	20	Yes, equipment can be isolated from service	FALSE	FALSE	FALSE	40 CFR 61 Subpart L	UNCLASSIFIED	28-Oct-16	19-Nov-16	ARAN PARKER
COKE	B111B	Valve	Externally Actuated	Gas	Accessible	FALSE	32	20" VALVE UNDERFIRE MAIN TO BECKERS W/2FL & 2WC	03	0.5	Yes, equipment can be isolated from service	FALSE	FALSE	FALSE	40 CFR 61 Subpart L	UNCLASSIFIED	19-Nov-16	19-Nov-16	ARAN PARKER
COKE	B112	Valve	Externally Actuated	Gas	Accessible	FALSE	892	6" & 2" VALVE UNDERFIRE MAIN TO BECKERS W/2FL, 3WC & 2SC	03	6	Yes, equipment can be isolated from service	FALSE	FALSE	FALSE	40 CFR 61 Subpart L	UNCLASSIFIED	28-Oct-16	19-Nov-16	ARAN PARKER
COKE	B112a	Valve	Externally Actuated	Gas	Accessible	FALSE	893	2" VALVE UNDERFIRE MAIN TO BECKERS W/2FL, 3WC & 2SC	03	2	Yes, equipment can be isolated from service	FALSE	FALSE	FALSE	40 CFR 61 Subpart L	UNCLASSIFIED	28-Oct-16	19-Nov-16	ARAN PARKER
COKE	B113	Valve	Externally Actuated	Vacuum Service	Accessible	FALSE	134	30" VALVE GAS LINE FROM NORTH PRIMARY COOLER W/4FL & 3WC	1P1	30	Yes, equipment can be isolated from service	FALSE	FALSE	FALSE	40 CFR 61 Subpart L	UNCLASSIFIED	28-Oct-16	18-Nov-16	ARAN PARKER
COKE	B113A	Valve	Externally Actuated	Gas	Accessible	FALSE	135	30" VALVE GAS LINE FROM NORTH PRIMARY COOLER W/4FL & 3WC	1P1	2	Yes, equipment can be isolated from service	FALSE	FALSE	FALSE	40 CFR 61 Subpart L	UNCLASSIFIED	19-Nov-16	19-Nov-16	ARAN PARKER
COKE	B113B	Valve	Externally Actuated	Gas	Accessible	FALSE	136	30" VALVE GAS LINE FROM NORTH PRIMARY COOLER W/4FL & 3WC	1P1	2	Yes, equipment can be isolated from service	FALSE	FALSE	FALSE	40 CFR 61 Subpart L	UNCLASSIFIED	19-Nov-16	19-Nov-16	ARAN PARKER
COKE	B113C	Valve	Externally Actuated	Gas	Accessible	FALSE	137	30" VALVE GAS LINE FROM NORTH PRIMARY COOLER W/4FL & 3WC	1P1	2	Yes, equipment can be isolated from service	FALSE	FALSE	FALSE	40 CFR 61 Subpart L	UNCLASSIFIED	19-Nov-16	19-Nov-16	ARAN PARKER
COKE	B114	Valve	Externally Actuated	Gas	Accessible	FALSE	1054	16" COG VALVE AT LITTLE HOLDER W/4-16" FL	00	16	Yes, equipment can be isolated from service	FALSE	FALSE	FALSE	40 CFR 61 Subpart L	UNCLASSIFIED	28-Oct-16	19-Nov-16	ARAN PARKER
COKE	B115	Valve	Externally Actuated	Gas	Accessible	FALSE	1055	16" COG VALVE AT LITTLE HOLDER W/3-2" PIPES & 30SC	0-3	16	Yes, equipment can be isolated from service	FALSE	FALSE	FALSE	40 CFR 61 Subpart L	UNCLASSIFIED	28-Oct-16	19-Nov-16	ARAN PARKER
COKE	B116	Valve	Externally Actuated	Gas	Accessible	FALSE	1053	3" VALVE & ¼" PIPE W/10SC & ½" PIPE W/5SC @ LITTLE HOLDER	0-3	3	Yes, equipment can be isolated from service	FALSE	FALSE	FALSE	40 CFR 61 Subpart L	UNCLASSIFIED	28-Oct-16	19-Nov-16	ARAN PARKER
COKE	B117	Valve	Externally Actuated	Gas	Accessible	FALSE	293	20" COG VALVE @ LITTLE HOLDER	0-3	20	Yes, equipment can be isolated from service	FALSE	FALSE	FALSE	40 CFR 61 Subpart L	UNCLASSIFIED	28-Oct-16	19-Nov-16	ARAN PARKER
COKE	B117A	Valve	Externally Actuated	Gas	Accessible	FALSE	1051	20" COG VALVE @ LITTLE HOLDER	0-3	0.5	Yes, equipment can be isolated from service	FALSE	FALSE	FALSE	40 CFR 61 Subpart L	UNCLASSIFIED	19-Nov-16	19-Nov-16	ARAN PARKER
COKE	B117B	Valve	Externally Actuated	Gas	Accessible	FALSE	1052	20" COG VALVE @ LITTLE HOLDER	0-3	0.5	Yes, equipment can be isolated from service	FALSE	FALSE	FALSE	40 CFR 61 Subpart L	UNCLASSIFIED	19-Nov-16	19-Nov-16	ARAN PARKER
COKE	B118	Valve	Externally Actuated	Gas	Accessible	FALSE	1056	20" COG VALVE @ LITTLE HOLDER	0-3	20	Yes, equipment can be isolated from service	FALSE	FALSE	FALSE	40 CFR 61 Subpart L	UNCLASSIFIED	28-Oct-16	19-Nov-16	ARAN PARKER
COKE	B118A	Valve	Externally Actuated	Gas	Accessible	FALSE	1057	20" COG VALVE @ LITTLE HOLDER	0-3	0.5	Yes, equipment can be isolated from service	FALSE	FALSE	FALSE	40 CFR 61 Subpart L	UNCLASSIFIED	19-Nov-16	19-Nov-16	ARAN PARKER
COKE	B118B	Valve	Externally Actuated	Gas	Accessible	FALSE	1058	20" COG VALVE @ LITTLE HOLDER	0-3	0.5	Yes, equipment can be isolated from service	FALSE	FALSE	FALSE	40 CFR 61 Subpart L	UNCLASSIFIED	19-Nov-16	19-Nov-16	ARAN PARKER
COKE	B118c	Valve	Externally Actuated	Gas	Accessible	FALSE	1059	20" COG VALVE @ LITTLE HOLDER	0-3	0.5	Yes, equipment can be isolated from service	FALSE	FALSE	FALSE	40 CFR 61 Subpart L	UNCLASSIFIED	19-Nov-16	19-Nov-16	ARAN PARKER
COKE	B119	Valve	Externally Actuated	Gas	Accessible	FALSE	1060	24" COG VALVE @ LITTLE HOLDER WITH ½" VALVE	0-3	24	Yes, equipment can be isolated from service	FALSE	FALSE	FALSE	40 CFR 61 Subpart L	UNCLASSIFIED	28-Oct-16	19-Nov-16	ARAN PARKER
COKE	B119A	Valve	Externally Actuated	Gas	Accessible	FALSE	1061	24" COG VALVE @ LITTLE HOLDER WITH ½" VALVE	0-3	0.5	Yes, equipment can be isolated from service	FALSE	FALSE	FALSE	40 CFR 61 Subpart L	UNCLASSIFIED	19-Nov-16	19-Nov-16	ARAN PARKER
COKE	B119B	Valve	Externally Actuated	Gas	Accessible	FALSE	1062	24" COG VALVE @ LITTLE HOLDER WITH ½" VALVE	0-3	0.5	Yes, equipment can be isolated from service	FALSE	FALSE	FALSE	40 CFR 61 Subpart L	UNCLASSIFIED	19-Nov-16	19-Nov-16	ARAN PARKER
COKE	B119C	Valve	Externally Actuated	Gas	Accessible	FALSE	1063	24" COG VALVE @ LITTLE HOLDER WITH ½" VALVE	0-3	0.5	Yes, equipment can be isolated from service	FALSE	FALSE	FALSE	40 CFR 61 Subpart L	UNCLASSIFIED	19-Nov-16	19-Nov-16	ARAN PARKER
COKE	B11a	Valve	Externally Actuated	Vacuum Service	Unsafe to Monitor	FALSE	0	3" VALVES & EXPANSION JOINT GAS LINE @ PRIMARY COOLERS W/6FL	4PR0	3	Yes, equipment can be isolated from service	FALSE	FALSE	FALSE	40 CFR 61 Subpart L	UNCLASSIFIED	28-Oct-16	12-Nov-16	ARAN PARKER
COKE	B12	Valve	Externally Actuated	Vacuum Service	Unsafe to Monitor	FALSE	0	GAS LINE EXPANSION JOINT @ PRIMARY COOLERS W/2FL & 4WC	4PR0	6	Yes, equipment can be isolated from service	FALSE	FALSE	FALSE	40 CFR 61 Subpart L	UNCLASSIFIED	28-Oct-16	12-Nov-16	ARAN PARKER
COKE	B120	Valve	Externally Actuated	Gas	Accessible	FALSE	1039	20" COG VALVE INLET TO LITTLE HOLDER WITH (2) ¾ "VALVES	0-3	20	Yes, equipment can be isolated from service	FALSE	FALSE	FALSE	40 CFR 61 Subpart L	UNCLASSIFIED	28-Oct-16	19-Nov-16	ARAN PARKER
COKE	B120A	Valve	Externally Actuated	Gas	Accessible	FALSE	1040	20" COG VALVE INLET TO LITTLE HOLDER WITH (2) ¾ "VALVES	0-3	0.5	Yes, equipment can be isolated from service	FALSE	FALSE	FALSE	40 CFR 61 Subpart L	UNCLASSIFIED	19-Nov-16	19-Nov-16	ARAN PARKER
COKE	B120B	Valve	Externally Actuated	Gas	Accessible	FALSE	1041	20" COG VALVE INLET TO LITTLE HOLDER WITH (2) ¾ "VALVES	0-3	0.5	Yes, equipment can be isolated from service	FALSE	FALSE	FALSE	40 CFR 61 Subpart L	UNCLASSIFIED	19-Nov-16	19-Nov-16	ARAN PARKER
COKE	B121	Valve	Externally Actuated	Gas	Accessible	FALSE	132	20" COG VALVE (BY-PASS) (3) 20"FL & 8WC	115	20	Yes, equipment can be isolated from service	FALSE	FALSE	FALSE	40 CFR 61 Subpart L	UNCLASSIFIED	28-Oct-16	19-Nov-16	ARAN PARKER
COKE	B122	Valve	Externally Actuated	Gas	Accessible	FALSE	67	"A" ESP PURGE LINE 4" VALVE 4FL, 1 ½ "VALVE, 7WC & 15SC	1P9	4	Yes, equipment can be isolated from service	TRUE	FALSE	FALSE	40 CFR 61 Subpart L	UNCLASSIFIED	28-Oct-16	19-Nov-16	ARAN PARKER
COKE	B123	Valve	Externally Actuated	Gas	Difficult to Monitor	FALSE	91	4" PURGE LINE (3) 4"FL ("B" PRECIPITATOR) 6WC	130	4	Yes, equipment can be isolated from service	TRUE	FALSE	FALSE	40 CFR 61 Subpart L	UNCLASSIFIED	28-Oct-16	19-Nov-16	ARAN PARKER
COKE	B124	Valve	Externally Actuated	Gas	Accessible	FALSE	71	(LA PRECIPITATOR) 3" BALL VALVE, 4" BALL VALVE, 5FL & 14 WC	1P1	3	Yes, equipment can be isolated from service	FALSE	FALSE	FALSE	40 CFR 61 Subpart L	UNCLASSIFIED	28-Oct-16	18-Nov-16	ARAN PARKER
COKE	B124A	Valve	Externally Actuated	Gas	Accessible	FALSE	72	(LA PRECIPITATOR) 3" BALL VALVE, 4" BALL VALVE, 5FL & 14 WC	1P9	3	Yes, equipment can be isolated from service	TRUE	FALSE	FALSE	40 CFR 61 Subpart L	UNCLASSIFIED	11-Nov-16	19-Nov-16	ARAN PARKER
COKE	B125	Valve	Externally Actuated	Gas	Accessible	FALSE	470	36" GAS INLET FINAL COOLER	00	36	Yes, equipment can be isolated from service	TRUE	FALSE	FALSE	40 CFR 61 Subpart L	UNCLASSIFIED	28-Oct-16	19-Nov-16	ARAN PARKER
COKE	B126	Valve	Externally Actuated	Gas	Accessible	FALSE	755	FINAL COOLER BYPASS – 2VALVES, 1FL & 3WC	010	1	Yes, equipment can be isolated from service	TRUE	FALSE	FALSE	40 CFR 61 Subpart L	UNCLASSIFIED	28-Oct-16	29-Nov-16	ARAN PARKER
COKE	B126a	Valve	Externally Actuated	Gas	Accessible	FALSE	756	2VALVES, 1FL & 3WC	010	1	Yes, equipment can be isolated from service	TRUE	FALSE	FALSE	40 CFR 61 Subpart L	UNCLASSIFIED	28-Oct-16	29-Nov-16	ARAN PARKER
COKE	B127	Valve	Externally Actuated	Gas	Accessible	FALSE	403	PURIFIER OUTLET W/1 VALVE	1P2	1	Yes, equipment can be isolated from service	TRUE	FALSE	FALSE	40 CFR 61 Subpart L	UNCLASSIFIED	28-Oct-16	29-Nov-16	ARAN PARKER
COKE	B129	Flange	Standard Service	Gas	Accessible	FALSE	722	COG TO FINAL COOLER BYPASS VALVE	1P1	76	Yes, equipment can be isolated from service	TRUE	FALSE	FALSE	40 CFR 61 Subpart L	UNCLASSIFIED	28-Oct-16	29-Nov-16	Matt Case
COKE	B13	Valve	Externally Actuated	Vacuum Service	Unsafe to Monitor	FALSE	0	GAS LINE @ WILPUTTE W/12WC	4PR0	6	Yes, equipment can be isolated from service	FALSE	FALSE	FALSE	40 CFR 61 Subpart L	UNCLASSIFIED	28-Oct-16	12-Nov-16	ARAN PARKER
COKE	B130	Valve	Externally Actuated	Gas	Unsafe to Monitor	FALSE	741	42" VALVE GAS LINE FROM SATURATOR TO STILL W/3FL & 14WC	040	42	Yes, equipment can be isolated from service	FALSE	FALSE	FALSE	40 CFR 61 Subpart L	UNCLASSIFIED	28-Oct-16	19-Nov-16	ARAN PARKER
COKE	B131	Valve	Externally Actuated	Gas	Accessible	FALSE	855	20" VALVE GAS LINE @ SCRUBBERS W/10FL	08	20	Yes, equipment can be isolated from service	FALSE	FALSE	FALSE	40 CFR 61 Subpart L	UNCLASSIFIED	28-Oct-16	19-Nov-16	ARAN PARKER
COKE	B132	Valve	Externally Actuated	Gas	Accessible	FALSE	842	20" VALVE GAS LINE @ SCRUBBERS W/10FL & 27WC	08	20	Yes, equipment can be isolated from service	FALSE	FALSE	FALSE	40 CFR 61 Subpart L	UNCLASSIFIED	28-Oct-16	19-Nov-16	ARAN PARKER
COKE	B133	Valve	Externally Actuated	Gas	Accessible	FALSE	796	20" VALVE GAS LINE @ SCRUBBERS W/11FL	05	20	Yes, equipment can be isolated from service	FALSE	FALSE	FALSE	40 CFR 61 Subpart L	UNCLASSIFIED	28-Oct-16	19-Nov-16	ARAN PARKER
COKE	B134	Valve	Externally Actuated	Gas	Accessible	FALSE	862	GAS LINE INLET @ WEST SCRUBBER	08	20	Yes, equipment can be isolated from service	FALSE	FALSE	FALSE	40 CFR 61 Subpart L	UNCLASSIFIED	28-Oct-16	19-Nov-16	Matt Case
COKE	B135	Valve	Externally Actuated	Gas	Accessible	FALSE	798	20" VALVE GAS LINE OUTLET @ WEST SCRUBBER W/3FL	08	20	Yes, equipment can be isolated from service	FALSE	FALSE	FALSE	40 CFR 61 Subpart L	UNCLASSIFIED	28-Oct-16	19-Nov-16	ARAN PARKER
COKE	B136	Valve	Externally Actuated	Gas	Accessible	FALSE	863	20" VALVE GAS LINE OUTLET WEST SCRUBBER W/4FL & 3WC	08	20	Yes, equipment can be isolated from service	FALSE	FALSE	FALSE	40 CFR 61 Subpart L	UNCLASSIFIED	28-Oct-16	19-Nov-16	ARAN PARKER
COKE	B137	Valve	Externally Actuated	Gas	Accessible	FALSE	819	20" VALVE GAS LINE @ HOT WATER TANK W/6FL & 9WC	1P1	20	Yes, equipment can be isolated from service	FALSE	FALSE	FALSE	40 CFR 61 Subpart L	UNCLASSIFIED	28-Oct-16	19-Nov-16	ARAN PARKER
COKE	B137A	Valve	Externally Actuated	Gas	Accessible	FALSE	820	20" VALVE GAS LINE @ HOT WATER TANK W/6FL & 9WC	1P1	1	Yes, equipment can be isolated from service	FALSE	FALSE	FALSE	40 CFR 61 Subpart L	UNCLASSIFIED	19-Nov-16	19-Nov-16	ARAN PARKER
COKE	B138	Valve	Externally Actuated	Gas	Accessible	FALSE	876	20", 2" VALVE GAS LINE @ EAST SCRUBBER W/6FL, 10WC & 20"VALV	08	20	Yes, equipment can be isolated from service	FALSE	FALSE	FALSE	40 CFR 61 Subpart L	UNCLASSIFIED	28-Oct-16	18-Nov-16	Matt Case
COKE	B138b	Valve	Externally Actuated	Gas	Accessible	FALSE	877	2" VALVE GAS LINE @ EAST SCRUBBER W/6FL, 10WC & 20"VALVE BOD	010	2	Yes, equipment can be isolated from service	FALSE	FALSE	FALSE	40 CFR 61 Subpart L	UNCLASSIFIED	28-Oct-16	18-Nov-16	ARAN PARKER
COKE	B139	Valve	Externally Actuated	Gas	Accessible	FALSE	878	20" VALVE GAS LINE @ EAST SCRUBBER W/6FL & 20"VALVE BODY W/3	08	20	Yes, equipment can be isolated from service	FALSE	FALSE	FALSE	40 CFR 61 Subpart L	UNCLASSIFIED	28-Oct-16	18-Nov-16	Matt Case
COKE	B14	Valve	Externally Actuated	Vacuum Service	Unsafe to Monitor	FALSE	0	GAS LINE @ WILPUTTE W/8WC	4PR0	3	Yes, equipment can be isolated from service	FALSE	FALSE	FALSE	40 CFR 61 Subpart L	UNCLASSIFIED	28-Oct-16	12-Nov-16	ARAN PARKER
COKE	B140	Valve	Externally Actuated	Gas	Accessible	FALSE	869	20" VALVE GAS LINE OUTLET @ EAST SCRUBBER W/5FL & 3WC	08	20	Yes, equipment can be isolated from service	FALSE	FALSE	FALSE	40 CFR 61 Subpart L	UNCLASSIFIED	28-Oct-16	19-Nov-16	Matt Case
COKE	B141	Valve	Externally Actuated	Gas	Accessible	FALSE	856	20" VALVE GAS @ EAST SCRUBBER W/3FL & 1WC	08	0	Yes, equipment can be isolated from service	FALSE	FALSE	FALSE	40 CFR 61 Subpart L	UNCLASSIFIED	28-Oct-16	19-Nov-16	ARAN PARKER
COKE	B143	Valve	Externally Actuated	Light Liquid	Difficult to Monitor	FALSE	825	1" VALVE & GAUGE EAST SCRUBBER OUTLET W/2WC & 20SC	1P19	1	Yes, equipment can be isolated from service	TRUE	FALSE	FALSE	40 CFR 61 Subpart L	UNCLASSIFIED	28-Oct-16	29-Nov-16	ARAN PARKER
COKE	B144	Valve	Externally Actuated	Gas	Difficult to Monitor	FALSE	822	2" VALVE EAST SCRUBBER TOP OUTLET W/2FL, 9WC & 4SC	2P20	1	Yes, equipment can be isolated from service	TRUE	FALSE	FALSE	40 CFR 61 Subpart L	UNCLASSIFIED	28-Oct-16	29-Nov-16	ARAN PARKER
COKE	B145	Valve	Externally Actuated	Light Liquid	Accessible	FALSE	823	2" VALVE WEST SCRUBBER TOP OUTLET W/2FL, 9WC & 4SC	1P3	2	Yes, equipment can be isolated from service	TRUE	FALSE	FALSE	40 CFR 61 Subpart L	UNCLASSIFIED	28-Oct-16	02-Dec-16	ARAN PARKER
COKE	B146	Valve	Externally Actuated	Light Liquid	Accessible	FALSE	824	6 VALVE WEST SCRUBBER TOP W/17SC	1P3	6	Yes, equipment can be isolated from service	TRUE	FALSE	FALSE	40 CFR 61 Subpart L	UNCLASSIFIED	28-Oct-16	02-Dec-16	ARAN PARKER
COKE	B147	Valve	Externally Actuated	Gas	Accessible	FALSE	35	24" COG VALVE (3) 24"FL, (2) ¾ "VALVES, 10SC GAS MAIN @ SULF	115	24	Yes, equipment can be isolated from service	FALSE	FALSE	FALSE	40 CFR 61 Subpart L	UNCLASSIFIED	28-Oct-16	19-Nov-16	ARAN PARKER
COKE	B147a	Valve	Externally Actuated	Gas	Accessible	FALSE	36	¾ "VALVES, 10SC GAS MAIN @ SULFATE	115	0.8	Yes, equipment can be isolated from service	FALSE	FALSE	FALSE	40 CFR 61 Subpart L	UNCLASSIFIED	28-Oct-16	19-Nov-16	ARAN PARKER
COKE	B147b	Valve	Externally Actuated	Gas	Accessible	FALSE	0	¾ "VALVES, 10SC GAS MAIN @ SULFATE	115	24	Yes, equipment can be isolated from service	FALSE	FALSE	FALSE	40 CFR 61 Subpart L	UNCLASSIFIED	28-Oct-16	18-Nov-16	ARAN PARKER

UNIT_CODE	TAG_ NUMBER	EQUITYPE_DESC	CONFIG_DESC	SERVICE_DESC	ACCESS_DESC	CLOSED_VENT _SYSTEM	ROUTE	LOCATION	LEVEL	SIZE	IFSTYPE_DESC	ATTEMPT_A LLOWED	UNDER_300_H OURS_SERVIC E	POTENTIAL_ OPEN_END	GROUP_DESC	PRODUCT_DESC	DATE_ADDED	DATE_IN_SERVICE	TECH_DESC
COKE	B148	Valve	Externally Actuated	Gas	Accessible	FALSE	37	24" VALVE, ¾" VALVE, 5SC, (2) 24"FL GAS MAIN @ SULFATE	115	24	Yes, equipment can be isolated from service	TRUE	FALSE	FALSE	40 CFR 61 Subpart L	UNCLASSIFIED	28-Oct-16	18-Nov-16	ARAN PARKER
COKE	B148a	Valve	Externally Actuated	Gas	Accessible	FALSE	38	¾" VALVE, 5SC, (2) 24"FL GAS MAIN @ SULFATE	115	0.8	Yes, equipment can be isolated from service	FALSE	FALSE	FALSE	40 CFR 61 Subpart L	UNCLASSIFIED	28-Oct-16	18-Nov-16	ARAN PARKER
COKE	B148B	Valve	Externally Actuated	Gas	Accessible	FALSE	39	¾" VALVE, 5SC, (2) 24"FL GAS MAIN @ SULFATE	115	0.8	Yes, equipment can be isolated from service	FALSE	FALSE	FALSE	40 CFR 61 Subpart L	UNCLASSIFIED	02-Dec-16	02-Dec-16	ARAN PARKER
COKE	B149	Valve	Externally Actuated	Gas	Accessible	FALSE	40	24" COG VALVE (3) 24"FL, 6SC, ¾ "VALVE SULFATE GAS MAIN @ SU	115	24	Yes, equipment can be isolated from service	FALSE	FALSE	FALSE	40 CFR 61 Subpart L	UNCLASSIFIED	28-Oct-16	18-Nov-16	ARAN PARKER
COKE	B15	Valve	Externally Actuated	Vacuum Service	Unsafe to Monitor	FALSE	0	GAS LINE WILPUTTE SUCTION MAIN W/5FL & 21WC	4PR0	36	Yes, equipment can be isolated from service	FALSE	FALSE	FALSE	40 CFR 61 Subpart L	UNCLASSIFIED	28-Oct-16	12-Nov-16	ARAN PARKER
COKE	B152a	Valve	Externally Actuated	Gas	Accessible	FALSE	803	3" COG VALVE (BLANKED)	1P5	3	Yes, equipment can be isolated from service	TRUE	FALSE	FALSE	40 CFR 61 Subpart L	UNCLASSIFIED	28-Oct-16	29-Nov-16	ARAN PARKER
COKE	B153	Flange	Standard Service	Gas	Accessible	FALSE	821	20" COG FROM SCRUBBER (VALVE)	03	20	Yes, equipment can be isolated from service	FALSE	FALSE	FALSE	40 CFR 61 Subpart L	UNCLASSIFIED	28-Oct-16	19-Nov-16	ARAN PARKER
COKE	B154	Valve	Externally Actuated	Gas	Accessible	FALSE	830	20" COG VALVE, 1" VALVE FROM SCRUBBER, 1/4" VALVE, 1/2" VALV	08	20	Yes, equipment can be isolated from service	FALSE	FALSE	FALSE	40 CFR 61 Subpart L	UNCLASSIFIED	28-Oct-16	19-Nov-16	Matt Case
COKE	B154a	Valve	Externally Actuated	Gas	Accessible	FALSE	831	1" VALVE FROM SCRUBBER, 3 THERMAL WELLS & 29SC	010	1	Yes, equipment can be isolated from service	FALSE	FALSE	FALSE	40 CFR 61 Subpart L	UNCLASSIFIED	28-Oct-16	19-Nov-16	Brent Birdwell
COKE	B154b	Valve	Externally Actuated	Gas	Accessible	FALSE	832	1/4" VALVE, 3 THERMAL WELLS & 29SC	03	0.3	Yes, equipment can be isolated from service	FALSE	FALSE	FALSE	40 CFR 61 Subpart L	UNCLASSIFIED	28-Oct-16	19-Nov-16	Brent Birdwell
COKE	B154c	Valve	Externally Actuated	Gas	Accessible	FALSE	833	1/2" VALVE, 3 THERMAL WELLS & 29SC	08	0.5	Yes, equipment can be isolated from service	FALSE	FALSE	FALSE	40 CFR 61 Subpart L	UNCLASSIFIED	28-Oct-16	19-Nov-16	ARAN PARKER
COKE	B155	Valve	Externally Actuated	Gas	Difficult to Monitor	FALSE	887	20" COG MAIN WT-OFF UNDERFIRE TO WILPUTTE (BLANKED)	020	20	Yes, equipment can be isolated from service	TRUE	FALSE	FALSE	40 CFR 61 Subpart L	UNCLASSIFIED	28-Oct-16	29-Nov-16	ARAN PARKER
COKE	B156	Valve	Externally Actuated	Gas	Accessible	FALSE	1070	3" VALVE GAS LINE @ LITTLE HOLDER W/2FL & 2WC	010	3	Yes, equipment can be isolated from service	TRUE	FALSE	FALSE	40 CFR 61 Subpart L	UNCLASSIFIED	28-Oct-16	29-Nov-16	ARAN PARKER
COKE	B157	Flange	Standard Service	Gas	Accessible	FALSE	829	20" COG FROM SCRUBBER VALVE BLANKED	02	20	Yes, equipment can be isolated from service	FALSE	FALSE	FALSE	40 CFR 61 Subpart L	UNCLASSIFIED	28-Oct-16	19-Nov-16	ARAN PARKER
COKE	B158	Flange	Standard Service	Light Liquid	Accessible	FALSE	1071	24" COG TO LITTLE HOLDER 2FL, 1" VALVE, (2) ¾ "VALVES, 2" VA	00	4	Yes, equipment can be isolated from service	TRUE	FALSE	FALSE	40 CFR 61 Subpart L	UNCLASSIFIED	28-Oct-16	07-Dec-16	ARAN PARKER
COKE	B158a	Valve	Externally Actuated	Light Liquid	Accessible	FALSE	1072	1" VALVE	00	1	Yes, equipment can be isolated from service	TRUE	FALSE	FALSE	40 CFR 61 Subpart L	UNCLASSIFIED	28-Oct-16	07-Dec-16	ARAN PARKER
COKE	B158b	Valve	Externally Actuated	Light Liquid	Accessible	FALSE	1073	¾ "VALVES	00	0.8	Yes, equipment can be isolated from service	TRUE	FALSE	FALSE	40 CFR 61 Subpart L	UNCLASSIFIED	28-Oct-16	07-Dec-16	ARAN PARKER
COKE	B158c	Valve	Externally Actuated	Light Liquid	Accessible	FALSE	1074	¾ "VALVES	00	0.8	Yes, equipment can be isolated from service	TRUE	FALSE	FALSE	40 CFR 61 Subpart L	UNCLASSIFIED	28-Oct-16	07-Dec-16	ARAN PARKER
COKE	B158d	Valve	Externally Actuated	Light Liquid	Accessible	FALSE	1075	2" VALVE & ¾ "PLUG	00	2	Yes, equipment can be isolated from service	TRUE	FALSE	FALSE	40 CFR 61 Subpart L	UNCLASSIFIED	28-Oct-16	07-Dec-16	ARAN PARKER
COKE	B159	Valve	Externally Actuated	Gas	Accessible	FALSE	1065	12" COG VALVE (BLANKED) W/2FL & ¾ "VALVE	05	12	Yes, equipment can be isolated from service	FALSE	FALSE	FALSE	40 CFR 61 Subpart L	UNCLASSIFIED	28-Oct-16	18-Nov-16	ARAN PARKER
COKE	B159a	Valve	Externally Actuated	Gas	Accessible	FALSE	1066	¾ "VALVE	06	0.8	Yes, equipment can be isolated from service	FALSE	FALSE	FALSE	40 CFR 61 Subpart L	UNCLASSIFIED	28-Oct-16	18-Nov-16	ARAN PARKER
COKE	B160	Valve	Externally Actuated	Gas	Accessible	FALSE	1068	20" COG VALVE W/2 FL & 1" VALVE	010	20	Yes, equipment can be isolated from service	FALSE	FALSE	FALSE	40 CFR 61 Subpart L	UNCLASSIFIED	28-Oct-16	18-Nov-16	ARAN PARKER
COKE	B160a	Valve	Externally Actuated	Gas	Accessible	FALSE	1069	1" VALVE	05	1	Yes, equipment can be isolated from service	FALSE	FALSE	FALSE	40 CFR 61 Subpart L	UNCLASSIFIED	28-Oct-16	18-Nov-16	ARAN PARKER
COKE	B161	Valve	Externally Actuated	Gas	Accessible	FALSE	1067	1 ½ "COG VALVE W/4SC	06	1.5	Yes, equipment can be isolated from service	FALSE	FALSE	FALSE	40 CFR 61 Subpart L	UNCLASSIFIED	28-Oct-16	18-Nov-16	ARAN PARKER
COKE	B163	Valve	Externally Actuated	Gas	Accessible	FALSE	1042	36" COG TEE AT LITTLE HOLDER W/(4) 24" FL, 2" VALVE FOR PUMP	0-3	1.5	Yes, equipment can be isolated from service	FALSE	FALSE	FALSE	40 CFR 61 Subpart L	UNCLASSIFIED	28-Oct-16	18-Nov-16	ARAN PARKER
COKE	B163a	Valve	Externally Actuated	Gas	Accessible	FALSE	1043	2" VALVE FOR PUMPING COG CONDENSATE	00	2	Yes, equipment can be isolated from service	FALSE	FALSE	FALSE	40 CFR 61 Subpart L	UNCLASSIFIED	28-Oct-16	18-Nov-16	ARAN PARKER
COKE	B163B	Valve	Externally Actuated	Gas	Accessible	FALSE	1044	2" VALVE FOR PUMPING COG CONDENSATE	00	2	Yes, equipment can be isolated from service	FALSE	FALSE	FALSE	40 CFR 61 Subpart L	UNCLASSIFIED	18-Nov-16	18-Nov-16	ARAN PARKER
COKE	B163C	Valve	Externally Actuated	Gas	Accessible	FALSE	1045	2" VALVE FOR PUMPING COG CONDENSATE	00	2	Yes, equipment can be isolated from service	FALSE	FALSE	FALSE	40 CFR 61 Subpart L	UNCLASSIFIED	18-Nov-16	18-Nov-16	ARAN PARKER
COKE	B164	Flange	Standard Service	Gas	Accessible	FALSE	1015	6" VENT PIPE ON NORTH CONDENSATE SEAL POT	01	6	Yes, equipment can be isolated from service	TRUE	FALSE	FALSE	40 CFR 61 Subpart L	UNCLASSIFIED	28-Oct-16	29-Nov-16	ARAN PARKER
COKE	B164b	Valve	Externally Actuated	Light Liquid	Accessible	FALSE	1016	2" PLUGGED VALVE	00	2	Yes, equipment can be isolated from service	TRUE	FALSE	FALSE	40 CFR 61 Subpart L	UNCLASSIFIED	28-Oct-16	13-Dec-16	ARAN PARKER
COKE	B165	Flange	Standard Service	Gas	Accessible	FALSE	1023	SOUTH CONDENSATE SEAL POT	01	4	Yes, equipment can be isolated from service	TRUE	FALSE	FALSE	40 CFR 61 Subpart L	UNCLASSIFIED	28-Oct-16	29-Nov-16	ARAN PARKER
COKE	B166	Flange	Standard Service	Gas	Accessible	FALSE	1452	(FLARE STACK) 2"FL, 2WC & 2SC	05	2	Yes, equipment can be isolated from service	TRUE	FALSE	FALSE	40 CFR 61 Subpart L	UNCLASSIFIED	28-Oct-16	29-Nov-16	ARAN PARKER
COKE	B167	Flange	Standard Service	Gas	Accessible	FALSE	1453	(FS) 24"ACCESS HATCH MAIN FLARE	03	24	Yes, equipment can be isolated from service	TRUE	FALSE	FALSE	40 CFR 61 Subpart L	UNCLASSIFIED	28-Oct-16	29-Nov-16	ARAN PARKER
COKE	B168	Valve	Externally Actuated	Gas	Accessible	FALSE	1474	(F) 4" VALVE, 2FL, & 2SC MAIN FLARE	04	4	Yes, equipment can be isolated from service	TRUE	FALSE	FALSE	40 CFR 61 Subpart L	UNCLASSIFIED	28-Oct-16	29-Nov-16	ARAN PARKER
COKE	B169	Valve	Externally Actuated	Gas	Accessible	FALSE	1472	(FS) (2) 2" VALVES & 29SC MAIN FLARE	09	2	Yes, equipment can be isolated from service	TRUE	FALSE	FALSE	40 CFR 61 Subpart L	UNCLASSIFIED	28-Oct-16	29-Nov-16	ARAN PARKER
COKE	B169a	Valve	Externally Actuated	Gas	Accessible	FALSE	1473	2" VALVES & 29SC MAIN FLARE	09	2	Yes, equipment can be isolated from service	TRUE	FALSE	FALSE	40 CFR 61 Subpart L	UNCLASSIFIED	28-Oct-16	29-Nov-16	ARAN PARKER
COKE	B17	Valve	Externally Actuated	Gas	Unsafe to Monitor	FALSE	0	CUTOFF V WILPUTTE NORTH CROSSOVER MAIN W/5FL & 12WC	4PR0	36	Yes, equipment can be isolated from service	FALSE	FALSE	FALSE	40 CFR 61 Subpart L	UNCLASSIFIED	28-Oct-16	12-Nov-16	ARAN PARKER
COKE	B170	Valve	Externally Actuated	Gas	Accessible	FALSE	1454	(F) 20" VALVE, (2) 20"FL, (5) 20" WELDS MAIN FLARE	05	20	Yes, equipment can be isolated from service	TRUE	FALSE	FALSE	40 CFR 61 Subpart L	UNCLASSIFIED	28-Oct-16	29-Nov-16	ARAN PARKER
COKE	B171	Flange	Standard Service	Light Liquid	Accessible	FALSE	1461	(F) 20"FL, (4) 20"WC, ½ "VALVE, 1WC, & 3SC MAIN FLARE	01	20	Yes, equipment can be isolated from service	TRUE	FALSE	FALSE	40 CFR 61 Subpart L	UNCLASSIFIED	28-Oct-16	29-Nov-16	ARAN PARKER
COKE	B172	Valve	Externally Actuated	Gas	Accessible	FALSE	1468	(F) 20" VALVE, (2) 20"FL, (3) 20" WELDS MAIN FLARE	04	20	Yes, equipment can be isolated from service	TRUE	FALSE	FALSE	40 CFR 61 Subpart L	UNCLASSIFIED	28-Oct-16	29-Nov-16	ARAN PARKER
COKE	B173	Valve	Externally Actuated	Gas	Accessible	FALSE	1467	(F) 1" VALVE, 1 WC, & 9SC MAIN FLARE	06	1	Yes, equipment can be isolated from service	TRUE	FALSE	FALSE	40 CFR 61 Subpart L	UNCLASSIFIED	28-Oct-16	29-Nov-16	ARAN PARKER
COKE	B174	Valve	Externally Actuated	Gas	Accessible	FALSE	1465	(F) 16" VALVE, (3) 16"FL, (8) 16"WC, 3"VALVE, (4) 3"FL & 12W	07	16	Yes, equipment can be isolated from service	TRUE	FALSE	FALSE	40 CFR 61 Subpart L	UNCLASSIFIED	28-Oct-16	29-Nov-16	ARAN PARKER
COKE	B174a	Valve	Externally Actuated	Gas	Accessible	FALSE	1466	3"VALVE, (4) 3"FL & 12WC MAIN FLARE	07	3	Yes, equipment can be isolated from service	TRUE	FALSE	FALSE	40 CFR 61 Subpart L	UNCLASSIFIED	28-Oct-16	29-Nov-16	ARAN PARKER
COKE	B175	Valve	Externally Actuated	Gas	Accessible	FALSE	1460	(F) 1" VALVE, 1WC, & 3SC MAIN FLARE	07	1	Yes, equipment can be isolated from service	TRUE	FALSE	FALSE	40 CFR 61 Subpart L	UNCLASSIFIED	28-Oct-16	29-Nov-16	ARAN PARKER
COKE	B176	Valve	Externally Actuated	Gas	Accessible	FALSE	1464	(F) 1" VALVE, 1WC & 3SC MAIN FLARE	05	1	Yes, equipment can be isolated from service	TRUE	FALSE	FALSE	40 CFR 61 Subpart L	UNCLASSIFIED	28-Oct-16	29-Nov-16	ARAN PARKER
COKE	B177	Valve	Externally Actuated	Gas	Accessible	FALSE	1462	(F) 24" VALVE, (2) 24"WC & (2) 24"FL MAIN FLARE	01	24	Yes, equipment can be isolated from service	TRUE	FALSE	FALSE	40 CFR 61 Subpart L	UNCLASSIFIED	28-Oct-16	29-Nov-16	ARAN PARKER
COKE	B178	Valve	Externally Actuated	Gas	Accessible	FALSE	1458	(F) 12" VALVE, 3WC, 2" VALVE & 3SC MAIN FLARE	08	12	Yes, equipment can be isolated from service	TRUE	FALSE	FALSE	40 CFR 61 Subpart L	UNCLASSIFIED	28-Oct-16	29-Nov-16	ARAN PARKER
COKE	B178a	Valve	Externally Actuated	Gas	Accessible	FALSE	1459	2" VALVE & 3SC MAIN FLARE	08	2	Yes, equipment can be isolated from service	TRUE	FALSE	FALSE	40 CFR 61 Subpart L	UNCLASSIFIED	28-Oct-16	29-Nov-16	ARAN PARKER
COKE	B179	Valve	Externally Actuated	Gas	Accessible	FALSE	1470	(F) 18" VALVE, 17 WC, 5FL, ¾ "VALVE & 7SC MAIN FLARE	013	18	Yes, equipment can be isolated from service	TRUE	FALSE	FALSE	40 CFR 61 Subpart L	UNCLASSIFIED	28-Oct-16	29-Nov-16	ARAN PARKER
COKE	B179a	Valve	Externally Actuated	Gas	Accessible	FALSE	1471	¾ "VALVE & 7SC MAIN FLARE	013	0.8	Yes, equipment can be isolated from service	TRUE	FALSE	FALSE	40 CFR 61 Subpart L	UNCLASSIFIED	28-Oct-16	29-Nov-16	ARAN PARKER
COKE	B180	Valve	Externally Actuated	Gas	Accessible	FALSE	1455	(F) (2) 24" ACCESS COVERS ¾ "VALVE, 4 WC & 2SC MAIN FLARE	01	24	Yes, equipment can be isolated from service	TRUE	FALSE	FALSE	40 CFR 61 Subpart L	UNCLASSIFIED	28-Oct-16	29-Nov-16	ARAN PARKER
COKE	B180a	Valve	Externally Actuated	Gas	Accessible	FALSE	1456	24" ACCESS COVERS	01	24	Yes, equipment can be isolated from service	TRUE	FALSE	FALSE	40 CFR 61 Subpart L	UNCLASSIFIED	28-Oct-16	29-Nov-16	ARAN PARKER
COKE	B180b	Valve	Externally Actuated	Gas	Accessible	FALSE	1457	¾ "VALVE	01	0.8	Yes, equipment can be isolated from service	TRUE	FALSE	FALSE	40 CFR 61 Subpart L	UNCLASSIFIED	28-Oct-16	29-Nov-16	ARAN PARKER
COKE	B181	Valve	Externally Actuated	Gas	Accessible	FALSE	1463	(F) 1 ½ "VALVE & 4WC CONN MAIN FLARE	01	1.5	Yes, equipment can be isolated from service	TRUE	FALSE	FALSE	40 CFR 61 Subpart L	UNCLASSIFIED	28-Oct-16	29-Nov-16	ARAN PARKER
COKE	B182	Valve	Externally Actuated	Gas	Accessible	FALSE	1469	4" VALVE, 2FL & 2WC MAIN FLARE	015	4	Yes, equipment can be isolated from service	TRUE	FALSE	FALSE	40 CFR 61 Subpart L	UNCLASSIFIED	28-Oct-16	29-Nov-16	ARAN PARKER
COKE	B183	Valve	Externally Actuated	Gas	Accessible	FALSE	68	"A" ESP PURGE LINE 4" VALVE 4FL, 1 ½ "VALVE, 7WC & 15SC	1P9	0.8	Yes, equipment can be isolated from service	TRUE	FALSE	FALSE	40 CFR 61 Subpart L	UNCLASSIFIED	11-Nov-16	19-Nov-16	Matt Case
COKE	B184	Valve	Externally Actuated	Gas	Accessible	FALSE	69	"A" ESP PURGE LINE 4" VALVE 4FL, 1 ½ "VALVE, 7WC & 15SC	16	0.8	Yes, equipment can be isolated from service	TRUE	FALSE	FALSE	40 CFR 61 Subpart L	UNCLASSIFIED	11-Nov-16	19-Nov-16	Matt Case
COKE	B185	Valve	Externally Actuated	Gas	Accessible	FALSE	70	"A" ESP PURGE LINE 4" VALVE 4FL, 1 ½ "VALVE, 7WC & 15SC	16	0.8	Yes, equipment can be isolated from service	TRUE	FALSE	FALSE	40 CFR 61 Subpart L	UNCLASSIFIED	11-Nov-16	19-Nov-16	Matt Case
COKE	B186	Valve	Externally Actuated	Gas	Accessible	FALSE	90	24" VALVE ESP A W/2FL & 4WC	1P5	1	Yes, equipment can be isolated from service	FALSE	FALSE	FALSE	40 CFR 61 Subpart L	UNCLASSIFIED	11-Nov-16	18-Nov-16	Matt Case
COKE	B187	Valve	Externally Actuated	Gas	Accessible	FALSE	133	20" COG VALVE (BY-PASS) (3) 20"FL & 8WC	115	0.7	Yes, equipment can be isolated from service	FALSE	FALSE	FALSE	40 CFR 61 Subpart L	UNCLASSIFIED	19-Nov-16	19-Nov-16	Matt Case
COKE	B188	Valve	Externally Actuated	Gas	Accessible	FALSE	722.004	20FT N OF EAST SCRUBBER 5FT N OF STAIRS 36" LINE OVERHEAD	1P4	0.5	Yes, equipment can be isolated from service	TRUE	FALSE	FALSE	40 CFR 61 Subpart L	UNCLASSIFIED	22-Mar-18	22-Mar-18	Matt Case
COKE	B189	Valve	Externally Actuated	Gas	Accessible	FALSE	722	COG TO FINAL COOLER BYPASS VALVE	1P1	36	Yes, equipment can be isolated from service	TRUE	FALSE	FALSE	40 CFR 61 Subpart L	UNCLASSIFIED	22-Mar-18	22-Mar-18	Matt Case
COKE	B19	Valve	Externally Actuated	Gas	Unsafe to Monitor	FALSE	0	CUTOFF V WILPUTTE SOUTH CROSSOVER MAIN W/5FL & 12WC	4PR0	36	Yes, equipment can be isolated from service	FALSE	FALSE	FALSE	40 CFR 61 Subpart L	UNCLASSIFIED	28-Oct-16	12-Nov-16	ARAN PARKER
COKE	B190	Valve	Externally Actuated	Gas	Accessible	FALSE	895	20" VALVE UNDERFIRE MAIN TO BECKERS W/2FL & 2WC	03	0.5	Yes, equipment can be isolated from service	FALSE	FALSE	FALSE	40 CFR 61 Subpart L	UNCLASSIFIED	19-Nov-16	19-Nov-16	Matt Case
COKE	B191	Valve	Externally Actuated	Gas	Accessible	FALSE	847	24" & (2) ½" VALVES W/ SATURATOR BYPASS W/3FL, 7WC & 5SC	1P1	24	Yes, equipment can be isolated from service	FALSE	FALSE	FALSE	40 CFR 61 Subpart L	UNCLASSIFIED	28-Oct-16	18-Nov-16	Matt Case
COKE	B192	Valve	Externally Actuated	Gas	Accessible	FALSE	129	TOP OF EXHAUSTER	1P6	0.5	Yes, equipment can be isolated from service	FALSE	FALSE	FALSE	40 CFR 61 Subpart L	UNCLASSIFIED	31-Jul-18	31-Jul-18	Matt Case
COKE	B193	Valve	Externally Actuated	Gas	Accessible	FALSE	130	TOP OF EXHAUSTER	1P6	0.5	Yes, equipment can be isolated from service	FALSE	FALSE	FALSE	40 CFR 61 Subpart L	UNCLASSIFIED	31-Jul-18	31-Jul-18	Matt Case
COKE	B194	Valve	Externally Actuated	Gas	Accessible	FALSE	131	TOP OF EXHAUSTER	1P6	0.5	Yes, equipment can be isolated from service	FALSE	FALSE	FALSE	40 CFR 61 Subpart L	UNCLASSIFIED	31-Jul-18	31-Jul-18	Matt Case
COKE	B195	Valve	Externally Actuated	Gas	Accessible	FALSE	132	TOP OF EXHAUSTER	1P6	0.5	Yes, equipment can be isolated from service	FALSE	FALSE	FALSE	40 CFR 61 Subpart L	UNCLASSIFIED	31-Jul-18	31-Jul-18	Matt Case
COKE	B196	Valve	Externally Actuated	Gas	Accessible	FALSE	126	TOP OF EXHAUSTER	1P6	0.5	Yes, equipment can be isolated from service	FALSE	FALSE	FALSE	40 CFR 61 Subpart L	UNCLASSIFIED	31-Jul-18	31-Jul-18	Matt Case
COKE	B197	Valve	Externally Actuated	Gas	Accessible	FALSE	127	TOP OF EXHAUSTER	1P6	0.5	Yes, equipment can be isolated from service	FALSE	FALSE	FALSE	40 CFR 61 Subpart L	UNCLASSIFIED	31-Jul-18	31-Jul-18	Matt Case
COKE	B198	Valve	Externally Actuated	Gas	Accessible	FALSE	128	TOP OF EXHAUSTER	1P6	0.5	Yes, equipment can be isolated from service	FALSE	FALSE	FALSE	40 CFR 61 Subpart L	UNCLASSIFIED	31-Jul-18	31-Jul-18	Matt Case
COKE	B199	Valve	Externally Actuated	Gas	Accessible	FALSE	125	.5 VALVE SOUTH EXHAUSTER BYPASS W/4FL & 10WC	1P6	0.5	Yes, equipment can be isolated from service	FALSE	FALSE	FALSE	40 CFR 61 Subpart L	UNCLASSIFIED	11-Nov-16	12-Nov-16	Matt Case
COKE	B20	Flange	Standard Service	Gas	Accessible	FALSE	1099	MANHOLE PRIMARY COOLER SUMP W/2FL & 2WC	02	36	Yes, equipment can be isolated from service	FALSE	FALSE	FALSE	40 CFR 61 Subpart L	UNCLASSIFIED	28-Oct-16	18-Nov-16	ARAN PARKER
COKE	B200	Valve	Externally Actuated	Light Liquid	Difficult to Monitor	FALSE	65	ELECTROSTATIC PRECIPITATOR IA	016	3	Yes, equipment can be isolated from service	FALSE	FALSE	FALSE	40 CFR 61 Subpart L	UNCLASSIFIED	31-Jul-18	31-Jul-18	Matt Case
COKE	B201	Valve	Externally Actuated	Gas	Accessible	FALSE	797	20" VALVE GAS LINE @ SCRUBBERS W/11FL	07	0.5	Yes, equipment can be isolated from service	FALSE	FALSE	FALSE	40 CFR 61 Subpart L	UNCLASSIFIED	19-Nov-16	19-Nov-16	Matt Case
COKE	B202	Valve	Externally Actuated	Gas	Accessible	FALSE	797.001	20" VALVE GAS LINE @ SCRUBBERS	07	1	Yes, equipment can be isolated from service	FALSE	FALSE	FALSE	40 CFR 61 Subpart L	UNCLASSIFIED	15-Mar-18	15-Mar-18	Matt Case
COKE	B203	Valve	Externally Actuated	Gas	Accessible	FALSE	797.002	GAS LINE @ SCRUBBERS	07	1.5	Yes, equipment can be isolated from service	FALSE	FALSE	FALSE	40 CFR 61 Subpart L	UNCLASSIFIED	15-Mar-18	15-Mar-18	Matt Case

UNIT_CODE	TAG_ NUMBER	EQUITYPE_DESC	CONFIG_DESC	SERVICE_DESC	ACCESS_DESC	CLOSED_VENT _SYSTEM	ROUTE	LOCATION	LEVEL	SIZE	IFSTYPE_DESC	ATTEMPT_A LLOWED	UNDER_300_H OURS_SERVIC E	POTENTIAL_ OPEN_END	GROUP_DESC	PRODUCT_DESC	DATE_ADDED	DATE_IN_SERVICE	TECH_DESC
COKE	B204	Valve	Externally Actuated	Gas	Accessible	FALSE	797.003	GAS LINE @ SCRUBBERS	06	0.8	Yes, equipment can be isolated from service	FALSE	FALSE	FALSE	40 CFR 61 Subpart L	UNCLASSIFIED	15-Mar-18	15-Mar-18	Matt Case
COKE	B205	Valve	Externally Actuated	Gas	Accessible	FALSE	797.019	GAS LINE @ SCRUBBERS	03	0.8	Yes, equipment can be isolated from service	FALSE	FALSE	FALSE	40 CFR 61 Subpart L	UNCLASSIFIED	15-Mar-18	15-Mar-18	Matt Case
COKE	B206	Valve	Externally Actuated	Gas	Accessible	FALSE	797.005	GAS LINE @ SCRUBBERS	07	1.5	Yes, equipment can be isolated from service	FALSE	FALSE	FALSE	40 CFR 61 Subpart L	UNCLASSIFIED	15-Mar-18	15-Mar-18	Matt Case
COKE	B207	Valve	Externally Actuated	Gas	Accessible	FALSE	797.006	GAS LINE @ SCRUBBERS	07	1.5	Yes, equipment can be isolated from service	FALSE	FALSE	FALSE	40 CFR 61 Subpart L	UNCLASSIFIED	15-Mar-18	15-Mar-18	Matt Case
COKE	B208	Valve	Externally Actuated	Gas	Accessible	FALSE	797.02	GAS LINE @ SCRUBBERS	03	1.5	Yes, equipment can be isolated from service	FALSE	FALSE	FALSE	40 CFR 61 Subpart L	UNCLASSIFIED	15-Mar-18	15-Mar-18	Brent Birdwell
COKE	B209	Valve	Externally Actuated	Gas	Accessible	FALSE	797.008	GAS LINE @ SCRUBBERS	07	1.5	Yes, equipment can be isolated from service	FALSE	FALSE	FALSE	40 CFR 61 Subpart L	UNCLASSIFIED	15-Mar-18	15-Mar-18	Matt Case
COKE	B21	Flange	Standard Service	Gas	Accessible	FALSE	1098	PRIMARY COOLER SUMP W 5FL, 12WC & 1SC	02	54	Yes, equipment can be isolated from service	FALSE	FALSE	FALSE	40 CFR 61 Subpart L	UNCLASSIFIED	28-Oct-16	18-Nov-16	ARAN PARKER
COKE	B210	Valve	Externally Actuated	Gas	Accessible	FALSE	797.009	GAS LINE @ SCRUBBERS	06	1.5	Yes, equipment can be isolated from service	FALSE	FALSE	FALSE	40 CFR 61 Subpart L	UNCLASSIFIED	15-Mar-18	15-Mar-18	Matt Case
COKE	B211	Valve	Externally Actuated	Gas	Accessible	FALSE	797.01	GAS LINE @ SCRUBBERS	06	1.5	Yes, equipment can be isolated from service	FALSE	FALSE	FALSE	40 CFR 61 Subpart L	UNCLASSIFIED	15-Mar-18	15-Mar-18	Matt Case
COKE	B212	Valve	Externally Actuated	Gas	Accessible	FALSE	797.023	GAS LINE @ SCRUBBERS	1P12	1.5	Yes, equipment can be isolated from service	FALSE	FALSE	FALSE	40 CFR 61 Subpart L	UNCLASSIFIED	15-Mar-18	15-Mar-18	Matt Case
COKE	B213	Valve	Externally Actuated	Gas	Accessible	FALSE	797.012	GAS LINE @ SCRUBBERS	05	1.5	Yes, equipment can be isolated from service	FALSE	FALSE	FALSE	40 CFR 61 Subpart L	UNCLASSIFIED	15-Mar-18	15-Mar-18	Matt Case
COKE	B214	Valve	Externally Actuated	Gas	Accessible	FALSE	797.013	GAS LINE @ SCRUBBERS	04	0.5	Yes, equipment can be isolated from service	FALSE	FALSE	FALSE	40 CFR 61 Subpart L	UNCLASSIFIED	15-Mar-18	15-Mar-18	Matt Case
COKE	B215	Valve	Externally Actuated	Gas	Accessible	FALSE	797.014	GAS LINE @ SCRUBBERS	04	1.5	Yes, equipment can be isolated from service	FALSE	FALSE	FALSE	40 CFR 61 Subpart L	UNCLASSIFIED	15-Mar-18	15-Mar-18	Matt Case
COKE	B216	Valve	Externally Actuated	Gas	Accessible	FALSE	797.015	GAS LINE @ SCRUBBERS	04	1.5	Yes, equipment can be isolated from service	FALSE	FALSE	FALSE	40 CFR 61 Subpart L	UNCLASSIFIED	15-Mar-18	15-Mar-18	Matt Case
COKE	B217	Valve	Externally Actuated	Gas	Accessible	FALSE	797.016	GAS LINE @ SCRUBBERS	05	1.5	Yes, equipment can be isolated from service	FALSE	FALSE	FALSE	40 CFR 61 Subpart L	UNCLASSIFIED	15-Mar-18	15-Mar-18	Matt Case
COKE	B218	Valve	Externally Actuated	Gas	Accessible	FALSE	797.017	GAS LINE @ SCRUBBERS	04	1.5	Yes, equipment can be isolated from service	FALSE	FALSE	FALSE	40 CFR 61 Subpart L	UNCLASSIFIED	15-Mar-18	15-Mar-18	Matt Case
COKE	B219	Valve	Externally Actuated	Gas	Accessible	FALSE	797.018	GAS LINE @ SCRUBBERS	04	1.5	Yes, equipment can be isolated from service	FALSE	FALSE	FALSE	40 CFR 61 Subpart L	UNCLASSIFIED	15-Mar-18	15-Mar-18	Matt Case
COKE	B22	Valve	Externally Actuated	Gas	Accessible	FALSE	803	20" COG UNDERFIRE TO BECKERS 20FT SW OF HOT WATER STORAGE	1P5	1	Yes, equipment can be isolated from service	TRUE	FALSE	FALSE	40 CFR 61 Subpart L	UNCLASSIFIED	09-May-18	09-May-18	Matt Case
COKE	B220	Valve	Externally Actuated	Gas	Accessible	FALSE	797.024	GAS LINE @ SCRUBBERS	05	1.5	Yes, equipment can be isolated from service	FALSE	FALSE	FALSE	40 CFR 61 Subpart L	UNCLASSIFIED	15-Mar-18	15-Mar-18	Matt Case
COKE	B221	Valve	Externally Actuated	Gas	Accessible	FALSE	797.021	GAS LINE @ SCRUBBERS	1P12	1.5	Yes, equipment can be isolated from service	FALSE	FALSE	FALSE	40 CFR 61 Subpart L	UNCLASSIFIED	15-Mar-18	15-Mar-18	Matt Case
COKE	B222	Valve	Externally Actuated	Gas	Accessible	FALSE	797.022	GAS LINE @ SCRUBBERS	1P2	1.5	Yes, equipment can be isolated from service	FALSE	FALSE	FALSE	40 CFR 61 Subpart L	UNCLASSIFIED	15-Mar-18	15-Mar-18	Matt Case
COKE	B223	Valve	Externally Actuated	Gas	Accessible	FALSE	797.025	GAS LINE @ SCRUBBERS	05	1.5	Yes, equipment can be isolated from service	FALSE	FALSE	FALSE	40 CFR 61 Subpart L	UNCLASSIFIED	15-Mar-18	15-Mar-18	Matt Case
COKE	B225	Valve	Externally Actuated	Gas	Accessible	FALSE	862.001	GAS LINE INLET @ WEST SCRUBBER	08	0.5	Yes, equipment can be isolated from service	FALSE	FALSE	FALSE	40 CFR 61 Subpart L	UNCLASSIFIED	15-Mar-18	15-Mar-18	Matt Case
COKE	B226	Valve	Externally Actuated	Gas	Accessible	FALSE	862.002	GAS LINE INLET @ WEST SCRUBBER	08	0.5	Yes, equipment can be isolated from service	FALSE	FALSE	FALSE	40 CFR 61 Subpart L	UNCLASSIFIED	15-Mar-18	15-Mar-18	Matt Case
COKE	B227	Valve	Externally Actuated	Gas	Accessible	FALSE	862.003	GAS LINE INLET @ WEST SCRUBBER	08	0.5	Yes, equipment can be isolated from service	FALSE	FALSE	FALSE	40 CFR 61 Subpart L	UNCLASSIFIED	15-Mar-18	15-Mar-18	Matt Case
COKE	B228	Valve	Externally Actuated	Gas	Accessible	FALSE	862.004	GAS LINE INLET @ WEST SCRUBBER	08	0.5	Yes, equipment can be isolated from service	FALSE	FALSE	FALSE	40 CFR 61 Subpart L	UNCLASSIFIED	15-Mar-18	15-Mar-18	Matt Case
COKE	B229	Valve	Externally Actuated	Gas	Accessible	FALSE	862.005	GAS LINE INLET @ WEST SCRUBBER	08	0.5	Yes, equipment can be isolated from service	FALSE	FALSE	FALSE	40 CFR 61 Subpart L	UNCLASSIFIED	15-Mar-18	15-Mar-18	Matt Case
COKE	B23	Valve	Externally Actuated	Gas	Accessible	FALSE	804	20" COG UNDERFIRE TO BECKERS 20FT SW OF HOT WATER STORAGE	1P5	1	Yes, equipment can be isolated from service	TRUE	FALSE	FALSE	40 CFR 61 Subpart L	UNCLASSIFIED	09-May-18	09-May-18	Matt Case
COKE	B230	Valve	Externally Actuated	Gas	Accessible	FALSE	862.006	GAS LINE INLET @ WEST SCRUBBER	08	0.5	Yes, equipment can be isolated from service	FALSE	FALSE	FALSE	40 CFR 61 Subpart L	UNCLASSIFIED	15-Mar-18	15-Mar-18	Matt Case
COKE	B231	Valve	Externally Actuated	Gas	Accessible	FALSE	862.007	GAS LINE INLET @ WEST SCRUBBER	08	0.5	Yes, equipment can be isolated from service	FALSE	FALSE	FALSE	40 CFR 61 Subpart L	UNCLASSIFIED	15-Mar-18	15-Mar-18	Matt Case
COKE	B232	Valve	Externally Actuated	Gas	Accessible	FALSE	862.008	GAS LINE INLET @ WEST SCRUBBER	08	0.5	Yes, equipment can be isolated from service	FALSE	FALSE	FALSE	40 CFR 61 Subpart L	UNCLASSIFIED	15-Mar-18	15-Mar-18	Matt Case
COKE	B233	Valve	Externally Actuated	Gas	Accessible	FALSE	862.009	GAS LINE INLET @ SW SIDE OF WEST SCRUBBER ABOVE VLV B136	013	1.5	Yes, equipment can be isolated from service	FALSE	FALSE	FALSE	40 CFR 61 Subpart L	UNCLASSIFIED	15-Mar-18	15-Mar-18	Matt Case
COKE	B234	Valve	Externally Actuated	Gas	Accessible	FALSE	854	20" & (4) ½" VALVES GAS LINE INLET EAST SCRUBBER W/4FL, 10WC	08	0.5	Yes, equipment can be isolated from service	FALSE	FALSE	FALSE	40 CFR 61 Subpart L	UNCLASSIFIED	19-Nov-16	19-Nov-16	Matt Case
COKE	B235	Valve	Externally Actuated	Gas	Accessible	FALSE	33	20" & (4) ½" VALVES GAS LINE INLET EAST SCRUBBER W/4FL, 10WC	08	0.5	Yes, equipment can be isolated from service	FALSE	FALSE	FALSE	40 CFR 61 Subpart L	UNCLASSIFIED	19-Nov-16	19-Nov-16	Matt Case
COKE	B236	Valve	Externally Actuated	Gas	Accessible	FALSE	34	20" & (4) ½" VALVES GAS LINE INLET EAST SCRUBBER W/4FL, 10WC	08	0.5	Yes, equipment can be isolated from service	FALSE	FALSE	FALSE	40 CFR 61 Subpart L	UNCLASSIFIED	19-Nov-16	19-Nov-16	Matt Case
COKE	B237	Valve	Externally Actuated	Gas	Accessible	FALSE	43	20" & (4) ½" VALVES GAS LINE INLET EAST SCRUBBER W/4FL, 10WC	08	0.5	Yes, equipment can be isolated from service	FALSE	FALSE	FALSE	40 CFR 61 Subpart L	UNCLASSIFIED	19-Nov-16	19-Nov-16	Matt Case
COKE	B238	Valve	Externally Actuated	Gas	Accessible	FALSE	44	20" & (4) ½" VALVES GAS LINE INLET EAST SCRUBBER W/4FL, 10WC	08	0.5	Yes, equipment can be isolated from service	FALSE	FALSE	FALSE	40 CFR 61 Subpart L	UNCLASSIFIED	19-Nov-16	19-Nov-16	Matt Case
COKE	B239	Valve	Externally Actuated	Gas	Accessible	FALSE	46	20" & (4) ½" VALVES GAS LINE INLET EAST SCRUBBER W/4FL, 10WC	08	0.5	Yes, equipment can be isolated from service	FALSE	FALSE	FALSE	40 CFR 61 Subpart L	UNCLASSIFIED	19-Nov-16	19-Nov-16	Matt Case
COKE	B24	Valve	Externally Actuated	Gas	Accessible	FALSE	803	20" COG UNDERFIRE TO BECKERS BATT & 3" COG VALVE (BLANKED)	1P5	30	Yes, equipment can be isolated from service	TRUE	FALSE	FALSE	40 CFR 61 Subpart L	UNCLASSIFIED	09-May-18	09-May-18	Matt Case
COKE	B240	Valve	Externally Actuated	Gas	Accessible	FALSE	47	20" & (4) ½" VALVES GAS LINE INLET EAST SCRUBBER W/4FL, 10WC	08	0.5	Yes, equipment can be isolated from service	FALSE	FALSE	FALSE	40 CFR 61 Subpart L	UNCLASSIFIED	19-Nov-16	19-Nov-16	Matt Case
COKE	B241	Valve	Externally Actuated	Gas	Accessible	FALSE	836.008	VALVE & LEVEL GAUGE EAST SCRUBBER BOTTOM	08	0.5	Yes, equipment can be isolated from service	TRUE	FALSE	FALSE	40 CFR 61 Subpart L	UNCLASSIFIED	16-Mar-18	16-Mar-18	Matt Case
COKE	B242	Valve	Externally Actuated	Gas	Accessible	FALSE	836.007	VALVE & LEVEL GAUGE EAST SCRUBBER BOTTOM	06	0.5	Yes, equipment can be isolated from service	TRUE	FALSE	FALSE	40 CFR 61 Subpart L	UNCLASSIFIED	16-Mar-18	16-Mar-18	Matt Case
COKE	B243	Valve	Externally Actuated	Gas	Accessible	FALSE	836.006	VALVE & LEVEL GAUGE EAST SCRUBBER BOTTOM	05	0.5	Yes, equipment can be isolated from service	TRUE	FALSE	FALSE	40 CFR 61 Subpart L	UNCLASSIFIED	16-Mar-18	16-Mar-18	Matt Case
COKE	B244	Valve	Externally Actuated	Gas	Accessible	FALSE	836.005	VALVE & LEVEL GAUGE EAST SCRUBBER BOTTOM	05	0.5	Yes, equipment can be isolated from service	TRUE	FALSE	FALSE	40 CFR 61 Subpart L	UNCLASSIFIED	16-Mar-18	16-Mar-18	Matt Case
COKE	B245	Valve	Externally Actuated	Gas	Accessible	FALSE	836.004	VALVE & LEVEL GAUGE EAST SCRUBBER BOTTOM	07	0.5	Yes, equipment can be isolated from service	TRUE	FALSE	FALSE	40 CFR 61 Subpart L	UNCLASSIFIED	16-Mar-18	16-Mar-18	Matt Case
COKE	B246	Valve	Externally Actuated	Gas	Accessible	FALSE	836.009	1FT N OF EAST SCRUBBER BOTTOM	08	0.5	Yes, equipment can be isolated from service	TRUE	FALSE	FALSE	40 CFR 61 Subpart L	UNCLASSIFIED	16-Mar-18	16-Mar-18	Matt Case
COKE	B251	Valve	Externally Actuated	Gas	Accessible	FALSE	8610.01	VALVE & LEVEL GAUGE WEST SCRUBBER BOTTOM	08	1	Yes, equipment can be isolated from service	TRUE	FALSE	FALSE	40 CFR 61 Subpart L	UNCLASSIFIED	21-Mar-18	21-Mar-18	Matt Case
COKE	B252	Valve	Externally Actuated	Gas	Accessible	FALSE	8610.01	VALVE & LEVEL GAUGE WEST SCRUBBER BOTTOM	07	0.5	Yes, equipment can be isolated from service	TRUE	FALSE	FALSE	40 CFR 61 Subpart L	UNCLASSIFIED	21-Mar-18	21-Mar-18	Matt Case
COKE	B253	Valve	Externally Actuated	Gas	Accessible	FALSE	8610.01	VALVE & LEVEL GAUGE WEST SCRUBBER BOTTOM	06	0.5	Yes, equipment can be isolated from service	TRUE	FALSE	FALSE	40 CFR 61 Subpart L	UNCLASSIFIED	21-Mar-18	21-Mar-18	Matt Case
COKE	B254	Valve	Externally Actuated	Gas	Accessible	FALSE	8610.01	VALVE & LEVEL GAUGE WEST SCRUBBER BOTTOM	07	0.5	Yes, equipment can be isolated from service	TRUE	FALSE	FALSE	40 CFR 61 Subpart L	UNCLASSIFIED	21-Mar-18	21-Mar-18	Matt Case
COKE	B255	Valve	Externally Actuated	Gas	Accessible	FALSE	8610.01	2FT N OF WEST SCRUBBER BOTTOM	05	0.5	Yes, equipment can be isolated from service	TRUE	FALSE	FALSE	40 CFR 61 Subpart L	UNCLASSIFIED	21-Mar-18	21-Mar-18	Matt Case
COKE	B256	Valve	Externally Actuated	Gas	Accessible	FALSE	8610.01	2FT N OF WEST SCRUBBER BOTTOM	05	0.5	Yes, equipment can be isolated from service	TRUE	FALSE	FALSE	40 CFR 61 Subpart L	UNCLASSIFIED	21-Mar-18	21-Mar-18	Matt Case
COKE	B257	Valve	Externally Actuated	Gas	Accessible	FALSE	878.001	GAS LINE @ EAST SCRUBBER	09	0.8	Yes, equipment can be isolated from service	FALSE	FALSE	FALSE	40 CFR 61 Subpart L	UNCLASSIFIED	21-Mar-18	21-Mar-18	Matt Case
COKE	B258	Valve	Externally Actuated	Gas	Accessible	FALSE	878.002	GAS LINE @ EAST SCRUBBER	09	0.8	Yes, equipment can be isolated from service	FALSE	FALSE	FALSE	40 CFR 61 Subpart L	UNCLASSIFIED	21-Mar-18	21-Mar-18	Matt Case
COKE	B259	Valve	Externally Actuated	Gas	Accessible	FALSE	878.003	GAS LINE @ EAST SCRUBBER	09	0.8	Yes, equipment can be isolated from service	FALSE	FALSE	FALSE	40 CFR 61 Subpart L	UNCLASSIFIED	21-Mar-18	21-Mar-18	Matt Case
COKE	B26	Blower	Standard Service	Gas	Accessible	FALSE	124	12" VALVE SOUTH EXHAUSTER BYPASS W/4FL & 10WC	1P9	0	Yes, equipment can be isolated from service	FALSE	FALSE	FALSE	40 CFR 61 Subpart L	UNCLASSIFIED	28-Oct-16	12-Nov-16	ARAN PARKER
COKE	B260	Valve	Externally Actuated	Gas	Accessible	FALSE	876.001	GAS LINE @ EAST SCRUBBER	010	0.8	Yes, equipment can be isolated from service	FALSE	FALSE	FALSE	40 CFR 61 Subpart L	UNCLASSIFIED	21-Mar-18	21-Mar-18	Matt Case
COKE	B261	Valve	Externally Actuated	Gas	Accessible	FALSE	876.002	GAS LINE @ EAST SCRUBBER	010	0.8	Yes, equipment can be isolated from service	FALSE	FALSE	FALSE	40 CFR 61 Subpart L	UNCLASSIFIED	21-Mar-18	21-Mar-18	Matt Case
COKE	B262	Valve	Externally Actuated	Light Liquid	Accessible	FALSE	869.001	GAS LINE OUTLET @ EAST SCRUBBER	012	0.5	Yes, equipment can be isolated from service	FALSE	FALSE	FALSE	40 CFR 61 Subpart L	UNCLASSIFIED	21-Mar-18	21-Mar-18	Matt Case
COKE	B263	Valve	Externally Actuated	Gas	Accessible	FALSE	853	20" & (4) ½" VALVES GAS LINE INLET EAST SCRUBBER W/4FL, 10WC	08	20	Yes, equipment can be isolated from service	FALSE	FALSE	FALSE	40 CFR 61 Subpart L	UNCLASSIFIED	28-Oct-16	19-Nov-16	Matt Case
COKE	B264	Valve	Externally Actuated	Gas	Accessible	FALSE	840.001	EAST SCRUBBER BOTTOM	09	1	Yes, equipment can be isolated from service	TRUE	FALSE	FALSE	40 CFR 61 Subpart L	UNCLASSIFIED	21-Mar-18	21-Mar-18	Matt Case
COKE	B265	Valve	Externally Actuated	Gas	Accessible	FALSE	840.002	EAST SCRUBBER BOTTOM	09	0.5	Yes, equipment can be isolated from service	TRUE	FALSE	FALSE	40 CFR 61 Subpart L	UNCLASSIFIED	21-Mar-18	21-Mar-18	Matt Case
COKE	B266	Valve	Externally Actuated	Gas	Accessible	FALSE	840.003	EAST SCRUBBER BOTTOM	09	0.5	Yes, equipment can be isolated from service	TRUE	FALSE	FALSE	40 CFR 61 Subpart L	UNCLASSIFIED	21-Mar-18	21-Mar-18	Matt Case
COKE	B267	Valve	Externally Actuated	Gas	Accessible	FALSE	8610.01	2FT N OF WEST SCRUBBER BOTTOM	010	2	Yes, equipment can be isolated from service	TRUE	FALSE	FALSE	40 CFR 61 Subpart L	UNCLASSIFIED	21-Mar-18	21-Mar-18	Matt Case
COKE	B268	Valve	Externally Actuated	Gas	Accessible	FALSE	740.004	20FT N OF EAST SCRUBBER 5FT N OF STAIRS	05	1	Yes, equipment can be isolated from service	TRUE	FALSE	FALSE	40 CFR 61 Subpart L	UNCLASSIFIED	22-Mar-18	22-Mar-18	Matt Case
COKE	B269	Valve	Externally Actuated	Gas	Accessible	FALSE	740.005	20FT N OF EAST SCRUBBER 5FT N OF STAIRS	05	0.5	Yes, equipment can be isolated from service	TRUE	FALSE	FALSE	40 CFR 61 Subpart L	UNCLASSIFIED	22-Mar-18	22-Mar-18	Matt Case
COKE	B27	Valve	Externally Actuated	Gas	Difficult to Monitor	FALSE	123	36" VALVE SOUTH EXHAUSTER CUTOFF	120	36	Yes, equipment can be isolated from service	FALSE	FALSE	FALSE	40 CFR 61 Subpart L	UNCLASSIFIED	28-Oct-16	12-Nov-16	ARAN PARKER
COKE	B270	Valve	Externally Actuated	Gas	Accessible	FALSE	740.006	20FT N OF EAST SCRUBBER 5FT N OF STAIRS	05	1	Yes, equipment can be isolated from service	TRUE	FALSE	FALSE	40 CFR 61 Subpart L	UNCLASSIFIED	22-Mar-18	22-Mar-18	Matt Case
COKE	B271	Valve	Externally Actuated	Gas	Accessible	FALSE	740.007	20FT N OF EAST SCRUBBER 5FT N OF STAIRS	010	1	Yes, equipment can be isolated from service	TRUE	FALSE	FALSE	40 CFR 61 Subpart L	UNCLASSIFIED	22-Mar-18	22-Mar-18	Matt Case
COKE	B272	Valve	Externally Actuated	Gas	Accessible	FALSE	740.008	20FT N OF EAST SCRUBBER 5FT N OF STAIRS	011	1	Yes, equipment can be isolated from service	TRUE	FALSE	FALSE	40 CFR 61 Subpart L	UNCLASSIFIED	22-Mar-18	22-Mar-18	Matt Case
COKE	B273	Valve	Externally Actuated	Gas	Accessible	FALSE	722.001	20FT N OF EAST SCRUBBER 5FT N OF STAIRS 36" LINE OVERHEAD	1P4	3	Yes, equipment can be isolated from service	TRUE	FALSE	FALSE	40 CFR 61 Subpart L	UNCLASSIFIED	22-Mar-18	22-Mar-18	Matt Case
COKE	B274	Valve	Externally Actuated	Gas	Accessible	FALSE	722.002	20FT N OF EAST SCRUBBER 5FT N OF STAIRS 36" LINE OVERHEAD	1P4	3	Yes, equipment can be isolated from service	TRUE	FALSE	FALSE	40 CFR 61 Subpart L	UNCLASSIFIED	22-Mar-18	22-Mar-18	Matt Case
COKE	B275	Valve	Externally Actuated	Gas	Accessible	FALSE	722.003	20FT N OF EAST SCRUBBER 5FT N OF STAIRS 36" LINE OVERHEAD	1P4	0.5	Yes, equipment can be isolated from service	TRUE	FALSE	FALSE	40 CFR 61 Subpart L	UNCLASSIFIED	22-Mar-18	22-Mar-18	Matt Case
COKE	B28	Valve	Externally Actuated	Gas	Accessible	FALSE	118	36", 3" & (3) 2" VALVES SOUTH EXHAUSTER OUTLET W/6FL, 13WC &	115	36	Yes, equipment can be isolated from service	FALSE	FALSE	FALSE	40 CFR 61 Subpart L	UNCLASSIFIED	28-Oct-16	12-Nov-16	ARAN PARKER
COKE	B28a	Valve	Externally Actuated	Gas	Accessible	FALSE	119	3"VALVES SOUTH EXHAUSTER OUTLET W/6FL, 13WC & 10SC	115	3	Yes, equipment can be isolated from service	FALSE	FALSE	FALSE	40 CFR 61 Subpart L	UNCLASSIFIED	28-Oct-16	12-Nov-16	ARAN PARKER
COKE	B28b	Valve	Externally Actuated	Gas	Accessible	FALSE	120	2" VALVES SOUTH EXHAUSTER OUTLET W/6FL, 13WC & 10SC	115	2	Yes, equipment can be isolated from service	FALSE	FALSE	FALSE	40 CFR 61 Subpart L	UNCLASSIFIED	28-Oct-16	12-Nov-16	ARAN PARKER
COKE	B28c	Valve	Externally Actuated	Gas	Accessible	FALSE	121	2" VALVES SOUTH EXHAUSTER OUTLET W/6FL, 13WC & 10SC	115	2	Yes, equipment can be isolated from service	FALSE	FALSE	FALSE	40 CFR 61 Subpart L	UNCLASSIFIED	28-Oct-16	12-Nov-16	ARAN PARKER
COKE	B28d	Valve	Externally Actuated	Gas	Accessible	FALSE	122	2" VALVES SOUTH EXHAUSTER OUTLET W/6FL, 13WC & 10SC	115	2	Yes, equipment can be isolated from service	FALSE	FALSE	FALSE	40 CFR 61 Subpart L	UNCLASSIFIED	28-Oct-16	12-Nov-16	ARAN PARKER

UNIT_CODE	TAG_ NUMBER	EQUITYPE_DESC	CONFIG_DESC	SERVICE_DESC	ACCESS_DESC	CLOSED_VENT _SYSTEM	ROUTE	LOCATION	LEVEL	SIZE	IFSTYPE_DESC	ATTEMPT_A LLOWED	UNDER_300_H OURS_SERVIC E	POTENTIAL_ OPEN_END	GROUP_DESC	PRODUCT_DESC	DATE_ADDED	DATE_IN_SERVICE	TECH_DESC
COKE	B30	Flange	Standard Service	Gas	Accessible	FALSE	62	MANHOLE ELECTROSTATIC PRECIPITATOR (ESP) 1A W/2WC	17	36	Yes, equipment can be isolated from service	FALSE	FALSE	FALSE	40 CFR 61 Subpart L	UNCLASSIFIED	28-Oct-16	12-Nov-16	ARAN PARKER
COKE	B31	Valve	Externally Actuated	Gas	Accessible	FALSE	60	WATER BLOCK EXHAUSTER SEAL	14	0.5	Yes, equipment can be isolated from service	FALSE	FALSE	FALSE	40 CFR 61 Subpart L	UNCLASSIFIED	28-Oct-16	12-Nov-16	Matt Case
COKE	B32	Valve	Externally Actuated	Gas	Accessible	FALSE	63	WATER BLOCK AT EXHAUSTER SEAL	14	0.5	Yes, equipment can be isolated from service	FALSE	FALSE	FALSE	40 CFR 61 Subpart L	UNCLASSIFIED	28-Oct-16	12-Nov-16	Matt Case
COKE	B33	Valve	Externally Actuated	Gas	Accessible	FALSE	64	3" VALVE @ ESP 1A W/3WC & 6SC	1P4	3	Yes, equipment can be isolated from service	FALSE	FALSE	FALSE	40 CFR 61 Subpart L	UNCLASSIFIED	28-Oct-16	12-Nov-16	ARAN PARKER
COKE	B34	Valve	Externally Actuated	Gas	Accessible	FALSE	55	1.5" VALVE FROM ESP 1A DEAD SIDE W/1WC & 9SC	1P1	1.5	Yes, equipment can be isolated from service	FALSE	FALSE	FALSE	40 CFR 61 Subpart L	UNCLASSIFIED	28-Oct-16	12-Nov-16	ARAN PARKER
COKE	B35	Valve	Externally Actuated	Light Liquid	Accessible	FALSE	52	1.5" VALVE @ ESP 1A W/2WC & 4SC	00	0	Yes, equipment can be isolated from service	TRUE	FALSE	FALSE	40 CFR 61 Subpart L	UNCLASSIFIED	28-Oct-16	12-Nov-16	ARAN PARKER
COKE	B36	Valve	Externally Actuated	Gas	Accessible	FALSE	130	12" VALVE NORTH EXHAUSTER BYPASS W/4FL & 10WC	11P7	12	Yes, equipment can be isolated from service	FALSE	FALSE	FALSE	40 CFR 61 Subpart L	UNCLASSIFIED	28-Oct-16	12-Nov-16	ARAN PARKER
COKE	B37	Valve	Externally Actuated	Light Liquid	Accessible	FALSE	56	2" & ½" VALVE @ ESP 1A W/2WC & 12SC	00	1	Yes, equipment can be isolated from service	TRUE	FALSE	FALSE	40 CFR 61 Subpart L	UNCLASSIFIED	28-Oct-16	01-Dec-16	ARAN PARKER
COKE	B37a	Valve	Externally Actuated	Light Liquid	Accessible	FALSE	57	½" VALVE @ ESP 1A W/2WC & 12SC	00	1	Yes, equipment can be isolated from service	TRUE	FALSE	FALSE	40 CFR 61 Subpart L	UNCLASSIFIED	28-Oct-16	01-Dec-16	ARAN PARKER
COKE	B38	Flange	Standard Service	Light Liquid	Accessible	FALSE	58	ESP 1A OUTLET W/1FL, 6WC & 1SC	1P0	2	Yes, equipment can be isolated from service	FALSE	FALSE	FALSE	40 CFR 61 Subpart L	UNCLASSIFIED	28-Oct-16	18-Nov-16	ARAN PARKER
COKE	B39	Valve	Externally Actuated	Gas	Accessible	FALSE	59	1.5" VALVE ESP 1A LIVE SIDE W/1WC & 7SC	1P4	1.5	Yes, equipment can be isolated from service	FALSE	FALSE	FALSE	40 CFR 61 Subpart L	UNCLASSIFIED	28-Oct-16	18-Nov-16	ARAN PARKER
COKE	B40	Flange	Standard Service	Gas	Accessible	FALSE	66	ESP 1A LIVE SIDE W/5FL, 15WC & 10SC	1P2	8	Yes, equipment can be isolated from service	FALSE	FALSE	FALSE	40 CFR 61 Subpart L	UNCLASSIFIED	28-Oct-16	18-Nov-16	ARAN PARKER
COKE	B41	Flange	Standard Service	Gas	Accessible	FALSE	61	ESP 1A DEAD SIDE W/5FL, 12WC & 11SC	1P4	8	Yes, equipment can be isolated from service	FALSE	FALSE	FALSE	40 CFR 61 Subpart L	UNCLASSIFIED	28-Oct-16	18-Nov-16	ARAN PARKER
COKE	B42	Valve	Externally Actuated	Gas	Accessible	FALSE	54	4" VALVE @ ESP 1A W/2FL, 5WC & 1SC	1P7	4	Yes, equipment can be isolated from service	TRUE	FALSE	FALSE	40 CFR 61 Subpart L	UNCLASSIFIED	28-Oct-16	18-Nov-16	ARAN PARKER
COKE	B43	Valve	Externally Actuated	Gas	Accessible	FALSE	53	1.5" VALVE @ ESP 1A W/4SC	1P7	2	Yes, equipment can be isolated from service	FALSE	FALSE	FALSE	40 CFR 61 Subpart L	UNCLASSIFIED	28-Oct-16	18-Nov-16	ARAN PARKER
COKE	B44	Valve	Externally Actuated	Gas	Accessible	FALSE	131	42" INLET VALVE TO NORTH EXHAUSTER	12	42	Yes, equipment can be isolated from service	FALSE	FALSE	FALSE	40 CFR 61 Subpart L	UNCLASSIFIED	28-Oct-16	18-Nov-16	ARAN PARKER
COKE	B45	Valve	Externally Actuated	Gas	Accessible	FALSE	831	5FT SE OF EAST SCRUBBER	012	1.5	Yes, equipment can be isolated from service	TRUE	FALSE	FALSE	40 CFR 61 Subpart L	UNCLASSIFIED	09-May-18	09-May-18	Matt Case
COKE	B46	Valve	Externally Actuated	Gas	Accessible	FALSE	65	20" VALVE GAS LINE @ ESPA W/2FL & 4WC	115	20	Yes, equipment can be isolated from service	FALSE	FALSE	FALSE	40 CFR 61 Subpart L	UNCLASSIFIED	28-Oct-16	18-Nov-16	ARAN PARKER
COKE	B47	Valve	Externally Actuated	Gas	Accessible	FALSE	128	42" VALVE NORTH EXHAUSTER OUTLET W/4FL & 9WC	18	42	Yes, equipment can be isolated from service	FALSE	FALSE	FALSE	40 CFR 61 Subpart L	UNCLASSIFIED	28-Oct-16	18-Nov-16	ARAN PARKER
COKE	B48	Valve	Externally Actuated	Gas	Accessible	FALSE	51	24" VALVE @ ESP A OUTLET W/2FL & 5WC	115	24	Yes, equipment can be isolated from service	FALSE	FALSE	FALSE	40 CFR 61 Subpart L	UNCLASSIFIED	28-Oct-16	18-Nov-16	ARAN PARKER
COKE	B49	Flange	Standard Service	Gas	Accessible	FALSE	88	ESP A DEAD SIDE W/1FL, 6WC & 2SC	15	8	Yes, equipment can be isolated from service	FALSE	FALSE	FALSE	40 CFR 61 Subpart L	UNCLASSIFIED	28-Oct-16	18-Nov-16	ARAN PARKER
COKE	B50	Valve	Externally Actuated	Gas	Accessible	FALSE	89	24" VALVE ESP A W/2FL & 4WC	1P5	24	Yes, equipment can be isolated from service	FALSE	FALSE	FALSE	40 CFR 61 Subpart L	UNCLASSIFIED	28-Oct-16	18-Nov-16	ARAN PARKER
COKE	B51	Flange	Standard Service	Gas	Accessible	FALSE	101	ESP B DEAD SIDE W/2FL & 9WC	16	8	Yes, equipment can be isolated from service	FALSE	FALSE	FALSE	40 CFR 61 Subpart L	UNCLASSIFIED	28-Oct-16	18-Nov-16	ARAN PARKER
COKE	B52	Valve	Externally Actuated	Gas	Accessible	FALSE	82	20" VALVE GAS LINE @ ESP A W/3FL & 10WC	115	20	Yes, equipment can be isolated from service	FALSE	FALSE	FALSE	40 CFR 61 Subpart L	UNCLASSIFIED	28-Oct-16	18-Nov-16	ARAN PARKER
COKE	B53	Flange	Standard Service	Gas	Accessible	FALSE	87	ESP A DEAD SIDE DRAIN W/1WC & 2SC	13	2	Yes, equipment can be isolated from service	FALSE	FALSE	FALSE	40 CFR 61 Subpart L	UNCLASSIFIED	28-Oct-16	18-Nov-16	ARAN PARKER
COKE	B54	Flange	Standard Service	Gas	Accessible	FALSE	86	WATER BLOCK AT EXHAUSTER SEAL	14	2	Yes, equipment can be isolated from service	FALSE	FALSE	FALSE	40 CFR 61 Subpart L	UNCLASSIFIED	28-Oct-16	18-Nov-16	Matt Case
COKE	B55	Flange	Standard Service	Gas	Accessible	FALSE	85	WATER BLOCK EXHAUSTER SEAL	14	2	Yes, equipment can be isolated from service	FALSE	FALSE	FALSE	40 CFR 61 Subpart L	UNCLASSIFIED	28-Oct-16	18-Nov-16	Matt Case
COKE	B56	Valve	Externally Actuated	Gas	Accessible	FALSE	84	3" VALVE ESP A W/3WC & 6SC	14	3	Yes, equipment can be isolated from service	FALSE	FALSE	FALSE	40 CFR 61 Subpart L	UNCLASSIFIED	28-Oct-16	18-Nov-16	ARAN PARKER
COKE	B57	Connector	Standard Service	Gas	Accessible	FALSE	100	ESP B W/9WC & 13SC	14	2	Yes, equipment can be isolated from service	TRUE	FALSE	FALSE	40 CFR 61 Subpart L	UNCLASSIFIED	28-Oct-16	18-Nov-16	ARAN PARKER
COKE	B58	Flange	Standard Service	Gas	Accessible	FALSE	81	ESP A LIVE SIDE W/3FL & 7WC	16	8	Yes, equipment can be isolated from service	FALSE	FALSE	FALSE	40 CFR 61 Subpart L	UNCLASSIFIED	28-Oct-16	18-Nov-16	ARAN PARKER
COKE	B59	Valve	Externally Actuated	Gas	Accessible	FALSE	0	20" VALVE GAS LINE INLET @ ESP A W/2FL & 3WC	1P15	20	Yes, equipment can be isolated from service	FALSE	FALSE	FALSE	40 CFR 61 Subpart L	UNCLASSIFIED	28-Oct-16	19-Nov-16	ARAN PARKER
COKE	B60	Flange	Standard Service	Gas	Accessible	FALSE	116	MANHOLES ESP A W/2FL & 4WC	16	36	Yes, equipment can be isolated from service	FALSE	FALSE	FALSE	40 CFR 61 Subpart L	UNCLASSIFIED	28-Oct-16	13-Dec-16	ARAN PARKER
COKE	B61	Valve	Externally Actuated	Gas	Accessible	FALSE	102	20" VALVE ESP B OUTLET W/3FL & 4WC	1P10	20	Yes, equipment can be isolated from service	FALSE	FALSE	FALSE	40 CFR 61 Subpart L	UNCLASSIFIED	28-Oct-16	19-Nov-16	ARAN PARKER
COKE	B62	Valve	Externally Actuated	Gas	Accessible	FALSE	74	4" VALVE @ ESP A W/3FL, 9WC & 6SC	1P3	2	Yes, equipment can be isolated from service	FALSE	FALSE	FALSE	40 CFR 61 Subpart L	UNCLASSIFIED	28-Oct-16	19-Nov-16	ARAN PARKER
COKE	B63	Flange	Standard Service	Gas	Accessible	FALSE	76	ESP A DEAD SIDE W/2FL & 2WC	1P3	2	Yes, equipment can be isolated from service	FALSE	FALSE	FALSE	40 CFR 61 Subpart L	UNCLASSIFIED	28-Oct-16	19-Nov-16	ARAN PARKER
COKE	B64	Valve	Externally Actuated	Gas	Accessible	FALSE	73	1" VALVE ESP A W/1FL, 4WC & 2SC	1P8	4	Yes, equipment can be isolated from service	FALSE	FALSE	FALSE	40 CFR 61 Subpart L	UNCLASSIFIED	28-Oct-16	19-Nov-16	ARAN PARKER
COKE	B65	Valve	Externally Actuated	Gas	Accessible	FALSE	75	½" VALVE GAS LINE DRAIN @ ESP A W/1WC & 10SC	1P3	0.5	Yes, equipment can be isolated from service	FALSE	FALSE	FALSE	40 CFR 61 Subpart L	UNCLASSIFIED	28-Oct-16	19-Nov-16	ARAN PARKER
COKE	B66	Valve	Externally Actuated	Gas	Accessible	FALSE	78	(2) 2" VALVES @ ESP A W/6WC & 15SC	115	2	Yes, equipment can be isolated from service	FALSE	FALSE	FALSE	40 CFR 61 Subpart L	UNCLASSIFIED	28-Oct-16	19-Nov-16	ARAN PARKER
COKE	B66a	Valve	Externally Actuated	Gas	Accessible	FALSE	79	2" VALVES @ ESP A W/6WC & 15SC	115	0.5	Yes, equipment can be isolated from service	FALSE	FALSE	FALSE	40 CFR 61 Subpart L	UNCLASSIFIED	28-Oct-16	19-Nov-16	ARAN PARKER
COKE	B66B	Valve	Externally Actuated	Gas	Accessible	FALSE	80	(2) 2" VALVES @ ESP A W/6WC & 15SC	115	2	Yes, equipment can be isolated from service	FALSE	FALSE	FALSE	40 CFR 61 Subpart L	UNCLASSIFIED	11-Nov-16	19-Nov-16	ARAN PARKER
COKE	B67	Valve	Externally Actuated	Gas	Accessible	FALSE	77	1.5" VALVE ESP A LIVE SIDE W/2FL, 9WC & 16SC	1P1	1.5	Yes, equipment can be isolated from service	FALSE	FALSE	FALSE	40 CFR 61 Subpart L	UNCLASSIFIED	28-Oct-16	19-Nov-16	ARAN PARKER
COKE	B68	Valve	Externally Actuated	Gas	Accessible	FALSE	92	4" VALVE ESP B W/2FL, 12WC & 20SC	1P10	4	Yes, equipment can be isolated from service	FALSE	FALSE	FALSE	40 CFR 61 Subpart L	UNCLASSIFIED	28-Oct-16	19-Nov-16	ARAN PARKER
COKE	B68A	Valve	Externally Actuated	Gas	Accessible	FALSE	93	4" VALVE ESP B W/2FL, 12WC & 20SC	1P10	4	Yes, equipment can be isolated from service	FALSE	FALSE	FALSE	40 CFR 61 Subpart L	UNCLASSIFIED	11-Nov-16	11-Nov-16	ARAN PARKER
COKE	B68B	Valve	Externally Actuated	Gas	Accessible	FALSE	94	4" VALVE ESP B W/2FL, 12WC & 20SC	1P10	4	Yes, equipment can be isolated from service	FALSE	FALSE	FALSE	40 CFR 61 Subpart L	UNCLASSIFIED	11-Nov-16	19-Nov-16	ARAN PARKER
COKE	B68C	Valve	Externally Actuated	Gas	Accessible	FALSE	95	4" VALVE ESP B W/2FL, 12WC & 20SC	1P10	4	Yes, equipment can be isolated from service	FALSE	FALSE	FALSE	40 CFR 61 Subpart L	UNCLASSIFIED	11-Nov-16	19-Nov-16	ARAN PARKER
COKE	B68D	Valve	Externally Actuated	Gas	Accessible	FALSE	96	4" VALVE ESP B W/2FL, 12WC & 20SC	1P10	4	Yes, equipment can be isolated from service	FALSE	FALSE	FALSE	40 CFR 61 Subpart L	UNCLASSIFIED	11-Nov-16	19-Nov-16	ARAN PARKER
COKE	B69	Valve	Externally Actuated	Gas	Accessible	FALSE	99	3" VALVE ESP B W/2WC & 6SC	13	3	Yes, equipment can be isolated from service	FALSE	FALSE	FALSE	40 CFR 61 Subpart L	UNCLASSIFIED	28-Oct-16	19-Nov-16	ARAN PARKER
COKE	B70	Flange	Standard Service	Gas	Accessible	FALSE	98	ESP B LIVE SIDE W/4FL, 10WC & 12SC	106	8	Yes, equipment can be isolated from service	FALSE	FALSE	FALSE	40 CFR 61 Subpart L	UNCLASSIFIED	28-Oct-16	19-Nov-16	ARAN PARKER
COKE	B71	Valve	Externally Actuated	Gas	Accessible	FALSE	97	20" VALVE ESP B INLET W/5FL & 14WC	115	20	Yes, equipment can be isolated from service	FALSE	FALSE	FALSE	40 CFR 61 Subpart L	UNCLASSIFIED	28-Oct-16	19-Nov-16	ARAN PARKER
COKE	B72	Flange	Standard Service	Gas	Accessible	FALSE	129	MANHOLE ESP B W/1FL & 2WC	107	36	Yes, equipment can be isolated from service	FALSE	FALSE	FALSE	40 CFR 61 Subpart L	UNCLASSIFIED	28-Oct-16	19-Nov-16	ARAN PARKER
COKE	B73	Flange	Standard Service	Gas	Accessible	FALSE	117	ESP C DEAD SIDE W/2FL & 8WC	14	8	Yes, equipment can be isolated from service	FALSE	FALSE	FALSE	40 CFR 61 Subpart L	UNCLASSIFIED	28-Oct-16	19-Nov-16	ARAN PARKER
COKE	B74	Valve	Externally Actuated	Gas	Accessible	FALSE	108	20" VALVE ESP C OUTLET W/3FL & 12WC	1P10	20	Yes, equipment can be isolated from service	FALSE	FALSE	FALSE	40 CFR 61 Subpart L	UNCLASSIFIED	28-Oct-16	01-Dec-16	ARAN PARKER
COKE	B75	Valve	Externally Actuated	Gas	Accessible	FALSE	109	2", ½" & (2) 1.5" VALVES ESP C W/2FL, 13WC & 32SC	1P3	2	Yes, equipment can be isolated from service	FALSE	FALSE	FALSE	40 CFR 61 Subpart L	UNCLASSIFIED	28-Oct-16	19-Nov-16	ARAN PARKER
COKE	B75a	Valve	Externally Actuated	Gas	Accessible	FALSE	110	½" VALVES ESP C W/2FL, 13WC & 32SC	13	0.5	Yes, equipment can be isolated from service	FALSE	FALSE	FALSE	40 CFR 61 Subpart L	UNCLASSIFIED	28-Oct-16	19-Nov-16	ARAN PARKER
COKE	B75b	Valve	Externally Actuated	Gas	Accessible	FALSE	111	1.5" VALVES ESP C W/2FL, 13WC & 32SC	13	0.5	Yes, equipment can be isolated from service	FALSE	FALSE	FALSE	40 CFR 61 Subpart L	UNCLASSIFIED	28-Oct-16	19-Nov-16	ARAN PARKER
COKE	B75c	Valve	Externally Actuated	Gas	Accessible	FALSE	112	1.5" VALVES ESP C W/2FL, 13WC & 32SC	17	1.5	Yes, equipment can be isolated from service	FALSE	FALSE	FALSE	40 CFR 61 Subpart L	UNCLASSIFIED	28-Oct-16	19-Nov-16	ARAN PARKER
COKE	B76	Valve	Externally Actuated	Gas	Accessible	FALSE	103	ESP C W/5WC & 7SC	1P10	3	Yes, equipment can be isolated from service	FALSE	FALSE	FALSE	40 CFR 61 Subpart L	UNCLASSIFIED	28-Oct-16	19-Nov-16	ARAN PARKER
COKE	B76A	Valve	Externally Actuated	Gas	Accessible	FALSE	104	ESP C W/5WC & 7SC	1P10	3	Yes, equipment can be isolated from service	FALSE	FALSE	FALSE	40 CFR 61 Subpart L	UNCLASSIFIED	11-Nov-16	19-Nov-16	ARAN PARKER
COKE	B76B	Valve	Externally Actuated	Gas	Accessible	FALSE	105	ESP C W/5WC & 7SC	1P10	3	Yes, equipment can be isolated from service	TRUE	FALSE	FALSE	40 CFR 61 Subpart L	UNCLASSIFIED	11-Nov-16	19-Nov-16	ARAN PARKER
COKE	B76C	Valve	Externally Actuated	Gas	Accessible	FALSE	106	ESP C W/5WC & 7SC	1P3	3	Yes, equipment can be isolated from service	FALSE	FALSE	FALSE	40 CFR 61 Subpart L	UNCLASSIFIED	11-Nov-16	19-Nov-16	ARAN PARKER
COKE	B76D	Valve	Externally Actuated	Gas	Accessible	FALSE	107	ESP C W/5WC & 7SC	1P10	3	Yes, equipment can be isolated from service	FALSE	FALSE	FALSE	40 CFR 61 Subpart L	UNCLASSIFIED	11-Nov-16	19-Nov-16	ARAN PARKER
COKE	B77	Flange	Standard Service	Gas	Accessible	FALSE	115	ESP C W/4WC & 6SC	14	2	Yes, equipment can be isolated from service	FALSE	FALSE	FALSE	40 CFR 61 Subpart L	UNCLASSIFIED	28-Oct-16	19-Nov-16	ARAN PARKER
COKE	B78	Flange	Standard Service	Gas	Accessible	FALSE	114	ESP LIVE SIDE W/4FL, 9WC & 4SC	16	8	Yes, equipment can be isolated from service	FALSE	FALSE	FALSE	40 CFR 61 Subpart L	UNCLASSIFIED	28-Oct-16	19-Nov-16	ARAN PARKER
COKE	B79	Valve	Externally Actuated	Gas	Accessible	FALSE	48	24" VALVE ESP C INLET W/3FL & 8WC	115	24	Yes, equipment can be isolated from service	FALSE	FALSE	FALSE	40 CFR 61 Subpart L	UNCLASSIFIED	28-Oct-16	19-Nov-16	ARAN PARKER
COKE	B8	Valve	Externally Actuated	Gas	Accessible	FALSE	382	GAS LINE FROM BECKERS BATTERY @ WASH OIL DECANTER W/3FL & 15	1P8	36	Yes, equipment can be isolated from service	FALSE	FALSE	FALSE	40 CFR 61 Subpart L	UNCLASSIFIED	28-Oct-16	12-Nov-16	ARAN PARKER
COKE	B80	Valve	Externally Actuated	Gas	Accessible	FALSE	113	1" VALVE ESP C INLET W/1FL, 8WC & 4SC	13	0.5	Yes, equipment can be isolated from service	FALSE	FALSE	FALSE	40 CFR 61 Subpart L	UNCLASSIFIED	28-Oct-16	19-Nov-16	ARAN PARKER
COKE	B81	Valve	Externally Actuated	Gas	Accessible	FALSE	45	24" VALVE GAS LINE @ ESP C W/3FL & 7WC	110	24	Yes, equipment can be isolated from service	FALSE	FALSE	FALSE	40 CFR 61 Subpart L	UNCLASSIFIED	28-Oct-16	18-Nov-16	ARAN PARKER
COKE	B82	Valve	Externally Actuated	Gas	Accessible	FALSE	850	42" & (2) 3" VALVES SATURATOR INLET W/9FL, 16WC & 3SC	1P15	42	Yes, equipment can be isolated from service	FALSE	FALSE	FALSE	40 CFR 61 Subpart L	UNCLASSIFIED	28-Oct-16	18-Nov-16	ARAN PARKER
COKE	B82a	Valve	Externally Actuated	Gas	Accessible	FALSE	851	3" VALVES SATURATOR INLET W/9FL, 16WC & 3SC	1P15	3	Yes, equipment can be isolated from service	FALSE	FALSE	FALSE	40 CFR 61 Subpart L	UNCLASSIFIED	28-Oct-16	18-Nov-16	ARAN PARKER
COKE	B82b	Valve	Externally Actuated	Gas	Accessible	FALSE	852	3" VALVES SATURATOR INLET W/9FL, 16WC & 3SC	1P15	3	Yes, equipment can be isolated from service	FALSE	FALSE	FALSE	40 CFR 61 Subpart L	UNCLASSIFIED	28-Oct-16	18-Nov-16	ARAN PARKER
COKE	B83a	Valve	Externally Actuated	Gas	Accessible	FALSE	848	½" VALVES W/ SATURATOR BYPASS W/3FL, 7WC & 5SC	1P-3	0.5	Yes, equipment can be isolated from service	FALSE	FALSE	FALSE	40 CFR 61 Subpart L	UNCLASSIFIED	28-Oct-16	18-Nov-16	ARAN PARKER
COKE	B83b	Valve	Externally Actuated	Light Liquid	Accessible	FALSE	849	½" VALVES W/ SATURATOR BYPASS W/3FL, 7WC & 5SC	1P-3	0.5	Yes, equipment can be isolated from service	FALSE	FALSE	FALSE	40 CFR 61 Subpart L	UNCLASSIFIED	28-Oct-16	18-Nov-16	ARAN PARKER
COKE	B84	Valve	Externally Actuated	Gas	Accessible	FALSE	844	42", 3" & 1" VALVE SATURATOR OUTLET W/9FL, 28WC & 9SC	1P2	42	Yes, equipment can be isolated from service	FALSE	FALSE	FALSE	40 CFR 61 Subpart L	UNCLASSIFIED	28-Oct-16	18-Nov-16	ARAN PARKER
COKE	B84a	Valve	Externally Actuated	Gas	Accessible	FALSE	845	3" VALVE SATURATOR OUTLET W/9FL, 28WC & 9SC	015	3	Yes, equipment can be isolated from service	FALSE	FALSE	FALSE	40 CFR 61 Subpart L	UNCLASSIFIED	28-Oct-16	18-Nov-16	ARAN PARKER
COKE	B84b	Valve	Externally Actuated	Gas	Accessible	FALSE	846	1" VALVE SATURATOR OUTLET W/9FL, 28WC & 9SC	015	1	Yes, equipment can be isolated from service	FALSE	FALSE	FALSE	40 CFR 61 Subpart L	UNCLASSIFIED	28-Oct-16	18-Nov-16	ARAN PARKER
COKE	B85	Valve	Externally Actuated	Gas	Accessible	FALSE	843	24" VALVE W/3FL & 4WC	1P2	24	Yes, equipment can be isolated from service	FALSE	FALSE	FALSE	40 CFR 61 Subpart L	UNCLASSIFIED	28-Oct-16	18-Nov-16	ARAN PARKER
COKE	B86	Valve	Externally Actuated	Gas	Accessible	FALSE	879	20", 1" & ½" VALVE W/6FL, 16WC & 6SC	08	20	Yes, equipment can be isolated from service	FALSE	FALSE	FALSE	40 CFR 61 Subpart L	UNCLASSIFIED	28-Oct-16	18-Nov-16	ARAN PARKER
COKE	B86a	Valve	Externally Actuated	Gas	Accessible	FALSE	880	1" VALVE W/6FL, 16WC & 6SC	08	1	Yes, equipment can be isolated from service	FALSE	FALSE	FALSE	40 CFR 61 Subpart L	UNCLASSIFIED	28-Oct-16	18-Nov-16	ARAN PARKER

UNIT_CODE	TAG_ NUMBER	EQUITYPE_DESC	CONFIG_DESC	SERVICE_DESC	ACCESS_DESC	CLOSED_VENT _SYSTEM	ROUTE	LOCATION	LEVEL	SIZE	IFSTYPE_DESC	ATTEMPT_A LLOWED	UNDER_300_H OURS_SERVIC E	POTENTIAL_ OPEN_END	GROUP_DESC	PRODUCT_DESC	DATE_ADDED	DATE_IN_SERVICE	TECH_DESC
COKE	B86b	Valve	Externally Actuated	Gas	Accessible	FALSE	881	¾" VALVE W/6FL, 16WC & 6SC	08	0.8	Yes, equipment can be isolated from service	FALSE	FALSE	FALSE	40 CFR 61 Subpart L	UNCLASSIFIED	28-Oct-16	18-Nov-16	ARAN PARKER
COKE	B87	Valve	Externally Actuated	Vacuum Service	Accessible	FALSE	184	42" & 2" VALVE GAS INLET NORTH PRIMARY COOLER W/4FL, 8WC & 2	1P8	42	Yes, equipment can be isolated from service	FALSE	FALSE	FALSE	40 CFR 61 Subpart L	UNCLASSIFIED	28-Oct-16	18-Nov-16	ARAN PARKER
COKE	B87a	Valve	Externally Actuated	Vacuum Service	Accessible	FALSE	185	2" VALVE GAS INLET NORTH PRIMARY COOLER W/4FL, 8WC & 2SC	1P8	2	Yes, equipment can be isolated from service	FALSE	FALSE	FALSE	40 CFR 61 Subpart L	UNCLASSIFIED	28-Oct-16	18-Nov-16	ARAN PARKER
COKE	B88	Valve	Externally Actuated	Vacuum Service	Accessible	FALSE	186	42" & 2" VALVE GAS INLET SOUTH PRIMARY COOLER W/4FL, 8WC & 2	1P8	42	Yes, equipment can be isolated from service	FALSE	FALSE	FALSE	40 CFR 61 Subpart L	UNCLASSIFIED	28-Oct-16	18-Nov-16	ARAN PARKER
COKE	B88a	Valve	Externally Actuated	Vacuum Service	Accessible	FALSE	187	2" VALVE GAS INLET SOUTH PRIMARY COOLER W/4FL, 8WC & 2SC	1P8	2	Yes, equipment can be isolated from service	FALSE	FALSE	FALSE	40 CFR 61 Subpart L	UNCLASSIFIED	28-Oct-16	18-Nov-16	ARAN PARKER
COKE	B89	Valve	Externally Actuated	Vacuum Service	Accessible	FALSE	181	MANHOLE NORTH PRIMARY COOLER 3RD LVL W/1FL & 2WC	2P1	48	Yes, equipment can be isolated from service	FALSE	FALSE	FALSE	40 CFR 61 Subpart L	UNCLASSIFIED	28-Oct-16	18-Nov-16	ARAN PARKER
COKE	B9	Flange	Standard Service	Vacuum Service	Accessible	FALSE	383	GAS LINE FROM BECKERS BATTERY @ SCRUBBERS W/3FL & 19WC	00	36	Yes, equipment can be isolated from service	TRUE	FALSE	FALSE	40 CFR 61 Subpart L	UNCLASSIFIED	28-Oct-16	13-Dec-16	ARAN PARKER
COKE	B90	Flange	Standard Service	Vacuum Service	Accessible	FALSE	188	MANHOLE SOUTH PRIMARY COOLER 3RD LVL W/1FL & 2WC	2P1	48	Yes, equipment can be isolated from service	FALSE	FALSE	FALSE	40 CFR 61 Subpart L	UNCLASSIFIED	28-Oct-16	18-Nov-16	ARAN PARKER
COKE	B91	Valve	Externally Actuated	Vacuum Service	Accessible	FALSE	189	20" VALVE GAS LINE @ COOLERS W/3FL & 9WC	2P-5	20	Yes, equipment can be isolated from service	FALSE	FALSE	FALSE	40 CFR 61 Subpart L	UNCLASSIFIED	28-Oct-16	18-Nov-16	ARAN PARKER
COKE	B92	Valve	Externally Actuated	Vacuum Service	Accessible	FALSE	138	14" VALVE GAS LINE @ COOLERS 3RD LVL W/3FL & 5WC	2P2	14	Yes, equipment can be isolated from service	FALSE	FALSE	FALSE	40 CFR 61 Subpart L	UNCLASSIFIED	28-Oct-16	18-Nov-16	Matt Case
COKE	B93	Valve	Externally Actuated	Vacuum Service	Accessible	FALSE	142	14" VALVE GAS LINE @ COOLERS 3RD LVL W/3FL & 7WC	2P1	14	Yes, equipment can be isolated from service	FALSE	FALSE	FALSE	40 CFR 61 Subpart L	UNCLASSIFIED	28-Oct-16	18-Nov-16	ARAN PARKER
COKE	B94	Valve	Externally Actuated	Vacuum Service	Accessible	FALSE	139	AUTO VALVE GAS LINE @ COOLERS 3RD LVL W/1FL & 6WC	2P7	14	Yes, equipment can be isolated from service	FALSE	FALSE	FALSE	40 CFR 61 Subpart L	UNCLASSIFIED	28-Oct-16	18-Nov-16	ARAN PARKER
COKE	B95	Valve	Externally Actuated	Vacuum Service	Accessible	FALSE	151	COG NORTH PRIMARY COOLER OUTLET 3RD LVL W/2FL & 6WC	2P2	36	Yes, equipment can be isolated from service	FALSE	FALSE	FALSE	40 CFR 61 Subpart L	UNCLASSIFIED	28-Oct-16	18-Nov-16	ARAN PARKER
COKE	B96	Valve	Externally Actuated	Vacuum Service	Accessible	FALSE	146	COG SOUTH PRIMARY COOLER OUTLET 3RD LVL W/2FL & 6WC	2P2	36	Yes, equipment can be isolated from service	FALSE	FALSE	FALSE	40 CFR 61 Subpart L	UNCLASSIFIED	28-Oct-16	18-Nov-16	ARAN PARKER
COKE	B97	Flange	Standard Service	Vacuum Service	Accessible	FALSE	942	MANHOLE NORTH PRIMARY COOLER 4TH LVL W/1FL & 2WC	3P1	36	Yes, equipment can be isolated from service	FALSE	FALSE	FALSE	40 CFR 61 Subpart L	UNCLASSIFIED	28-Oct-16	18-Nov-16	ARAN PARKER
COKE	B98	Flange	Standard Service	Vacuum Service	Accessible	FALSE	182	MANHOLE SOUTH PRIMARY COOLER 4TH LVL W/1FL & 2WC	3P1	36	Yes, equipment can be isolated from service	FALSE	FALSE	FALSE	40 CFR 61 Subpart L	UNCLASSIFIED	28-Oct-16	18-Nov-16	ARAN PARKER
COKE	B99	Valve	Externally Actuated	Vacuum Service	Accessible	FALSE	183	MANHOLE NORTH PRIMARY COOLER TOP W/1FL & 2WC	4P1	24	Yes, equipment can be isolated from service	FALSE	FALSE	FALSE	40 CFR 61 Subpart L	UNCLASSIFIED	28-Oct-16	18-Nov-16	ARAN PARKER
COKE	R1	Valve	Externally Actuated	Light Liquid	Accessible	FALSE	769	4" LINE @ CRUDE RESIDUE COLUMN W/1FL, 1" VALVE & 5SC	06	1	Yes, equipment can be isolated from service	TRUE	FALSE	FALSE	40 CFR 61 Subpart L	UNCLASSIFIED	24-Oct-16	23-Nov-16	ARAN PARKER
COKE	R10	Valve	Externally Actuated	Light Liquid	Accessible	FALSE	749	2"VALVE LINE FROM PURIFIER W/2FL, 3WC & 5SC	01	2	Yes, equipment can be isolated from service	TRUE	FALSE	FALSE	40 CFR 61 Subpart L	UNCLASSIFIED	24-Oct-16	23-Nov-16	ARAN PARKER
COKE	R100	Valve	Externally Actuated	Light Liquid	Accessible	FALSE	434	(2) 1" & ½" VALVES WASH OIL DECANTER BOTTOM W/23SC	09	1	Yes, equipment can be isolated from service	TRUE	FALSE	FALSE	40 CFR 61 Subpart L	UNCLASSIFIED	24-Oct-16	23-Nov-16	ARAN PARKER
COKE	R100A	Valve	Externally Actuated	Light Liquid	Accessible	FALSE	435	½" VALVES WASH OIL DECANTER BOTTOM W/23SC	09	0.5	Yes, equipment can be isolated from service	TRUE	FALSE	FALSE	40 CFR 61 Subpart L	UNCLASSIFIED	24-Oct-16	23-Nov-16	ARAN PARKER
COKE	R100B	Valve	Externally Actuated	Light Liquid	Accessible	FALSE	436	½" VALVES WASH OIL DECANTER BOTTOM W/23SC	09	0.5	Yes, equipment can be isolated from service	TRUE	FALSE	FALSE	40 CFR 61 Subpart L	UNCLASSIFIED	24-Oct-16	23-Nov-16	ARAN PARKER
COKE	R101	Valve	Externally Actuated	Light Liquid	Accessible	FALSE	437	(3) ½" VALVES WASH OIL LINE @ WASH OIL DECANTER W/3FL, 6WC &	07	0.5	Yes, equipment can be isolated from service	TRUE	FALSE	FALSE	40 CFR 61 Subpart L	UNCLASSIFIED	24-Oct-16	23-Nov-16	ARAN PARKER
COKE	R101A	Valve	Externally Actuated	Light Liquid	Accessible	FALSE	438	½" VALVES WASH OIL LINE @ WASH OIL DECANTER W/3FL, 6WC & 18S	07	0.5	Yes, equipment can be isolated from service	TRUE	FALSE	FALSE	40 CFR 61 Subpart L	UNCLASSIFIED	24-Oct-16	23-Nov-16	ARAN PARKER
COKE	R102	Valve	Externally Actuated	Light Liquid	Accessible	FALSE	432	4" VALVE WASH OIL LINE @ WASH OIL DECANTER W/2FL & 2WC	03	4	Yes, equipment can be isolated from service	TRUE	FALSE	FALSE	40 CFR 61 Subpart L	UNCLASSIFIED	24-Oct-16	23-Nov-16	ARAN PARKER
COKE	R102B	Valve	Externally Actuated	Light Liquid	Accessible	FALSE	433	½" VALVES WASH OIL LINE @ WASH OIL DECANTER W/3FL, 6WC & 18S	03	0.5	Yes, equipment can be isolated from service	TRUE	FALSE	FALSE	40 CFR 61 Subpart L	UNCLASSIFIED	24-Oct-16	23-Nov-16	ARAN PARKER
COKE	R103	Valve	Externally Actuated	Light Liquid	Accessible	FALSE	430	4" VALVE WASH OIL LINE @ WASH OIL DECANTER	04	4	Yes, equipment can be isolated from service	TRUE	FALSE	FALSE	40 CFR 61 Subpart L	UNCLASSIFIED	24-Oct-16	23-Nov-16	ARAN PARKER
COKE	R104	Valve	Externally Actuated	Light Liquid	Accessible	FALSE	431	FCV @ BECKERS WASH OIL DECANTER W/1FL	00	1	Yes, equipment can be isolated from service	TRUE	FALSE	FALSE	40 CFR 61 Subpart L	UNCLASSIFIED	24-Oct-16	01-Dec-16	ARAN PARKER
COKE	R105	Valve	Externally Actuated	Light Liquid	Accessible	FALSE	428	4" VALVE WASH OIL LINE @ BECKERS WASH OIL DECANTER W/2FL & 2	03	4	Yes, equipment can be isolated from service	TRUE	FALSE	FALSE	40 CFR 61 Subpart L	UNCLASSIFIED	24-Oct-16	23-Nov-16	ARAN PARKER
COKE	R106	Pump	Standard Service	Light Liquid	Accessible	FALSE	429	BECKERS WASH OIL DECANTER PUMP	01	0	Yes, equipment can be isolated from service	TRUE	FALSE	FALSE	40 CFR 61 Subpart L	UNCLASSIFIED	24-Oct-16	23-Nov-16	ARAN PARKER
COKE	R107	Valve	Externally Actuated	Light Liquid	Accessible	FALSE	422	(2) 1" & ½" VALVES @ BECKERS WASH OIL DECANTER W/16SC	03	1	Yes, equipment can be isolated from service	TRUE	FALSE	FALSE	40 CFR 61 Subpart L	UNCLASSIFIED	24-Oct-16	23-Nov-16	ARAN PARKER
COKE	R107A	Valve	Externally Actuated	Light Liquid	Accessible	FALSE	423	½" VALVES @ BECKERS WASH OIL DECANTER W/16SC	03	0.5	Yes, equipment can be isolated from service	TRUE	FALSE	FALSE	40 CFR 61 Subpart L	UNCLASSIFIED	24-Oct-16	23-Nov-16	ARAN PARKER
COKE	R107B	Valve	Externally Actuated	Light Liquid	Accessible	FALSE	424	1" VALVES @ BECKERS WASH OIL DECANTER W/16SC	03	1	Yes, equipment can be isolated from service	TRUE	FALSE	FALSE	40 CFR 61 Subpart L	UNCLASSIFIED	24-Oct-16	23-Nov-16	ARAN PARKER
COKE	R108	Valve	Externally Actuated	Light Liquid	Accessible	FALSE	426	(2) ½" VALVES & LEVEL CHECK LINE @ BECKERS WASH OIL DECANTER	04	0.5	Yes, equipment can be isolated from service	TRUE	FALSE	FALSE	40 CFR 61 Subpart L	UNCLASSIFIED	24-Oct-16	23-Nov-16	ARAN PARKER
COKE	R108A	Valve	Externally Actuated	Light Liquid	Accessible	FALSE	427	½" VALVES & LEVEL CHECK LINE @ BECKERS WASH OIL DECANTER W/2	04	0.5	Yes, equipment can be isolated from service	TRUE	FALSE	FALSE	40 CFR 61 Subpart L	UNCLASSIFIED	24-Oct-16	23-Nov-16	ARAN PARKER
COKE	R109	Valve	Externally Actuated	Light Liquid	Accessible	FALSE	359	2" VALVE LEVEL CHECK LINE @ WASH OIL DECANTER W/6WC & 2SC	015	2	Yes, equipment can be isolated from service	TRUE	FALSE	FALSE	40 CFR 61 Subpart L	UNCLASSIFIED	24-Oct-16	23-Nov-16	ARAN PARKER
COKE	R11	Valve	Externally Actuated	Light Liquid	Accessible	FALSE	746	4"VALVE LINE FROM PURIFIER W/2FL & 8WC	02	4	Yes, equipment can be isolated from service	TRUE	FALSE	FALSE	40 CFR 61 Subpart L	UNCLASSIFIED	24-Oct-16	23-Nov-16	ARAN PARKER
COKE	R110	Valve	Externally Actuated	Light Liquid	Accessible	FALSE	367	2" VALVE LEVEL CHECK LINE @ WASH OIL DECANTER W/3WC & 12SC	07	2	Yes, equipment can be isolated from service	TRUE	FALSE	FALSE	40 CFR 61 Subpart L	UNCLASSIFIED	24-Oct-16	23-Nov-16	ARAN PARKER
COKE	R111	Valve	Externally Actuated	Light Liquid	Accessible	FALSE	368	¾" VALVE LEVEL CHECK LINE @ WASH OIL DECANTER W/1WC & 7SC	012	0.8	Yes, equipment can be isolated from service	TRUE	FALSE	FALSE	40 CFR 61 Subpart L	UNCLASSIFIED	24-Oct-16	23-Nov-16	ARAN PARKER
COKE	R112	Valve	Externally Actuated	Light Liquid	Accessible	FALSE	370	¾" VALVE LEVEL CHECK LINE @ WASH OIL DECANTER W/1WC & 7SC	013	0.8	Yes, equipment can be isolated from service	TRUE	FALSE	FALSE	40 CFR 61 Subpart L	UNCLASSIFIED	24-Oct-16	23-Nov-16	ARAN PARKER
COKE	R113	Valve	Externally Actuated	Light Liquid	Accessible	FALSE	369	¾" VALVE LEVEL CHECK LINE @ WASH OIL DECANTER W/1WC & 7SC	014	0.8	Yes, equipment can be isolated from service	TRUE	FALSE	FALSE	40 CFR 61 Subpart L	UNCLASSIFIED	24-Oct-16	23-Nov-16	ARAN PARKER
COKE	R114	Valve	Externally Actuated	Light Liquid	Accessible	FALSE	371	¾" VALVE LEVEL CHECK LINE @ WASH OIL DECANTER W/1WC & 7SC	016	0.8	Yes, equipment can be isolated from service	TRUE	FALSE	FALSE	40 CFR 61 Subpart L	UNCLASSIFIED	24-Oct-16	23-Nov-16	ARAN PARKER
COKE	R115	Valve	Externally Actuated	Light Liquid	Accessible	FALSE	372	¾" VALVE LEVEL CHECK LINE @ WASH OIL DECANTER W/1WC & 7SC	017	0.8	Yes, equipment can be isolated from service	TRUE	FALSE	FALSE	40 CFR 61 Subpart L	UNCLASSIFIED	24-Oct-16	23-Nov-16	ARAN PARKER
COKE	R116	Valve	Externally Actuated	Light Liquid	Difficult to Monitor	FALSE	356	(2) 6"VALVES, 4FL & 8WC OVERFLOW FROM WASH OIL DECANTER TO P	020	6	Yes, equipment can be isolated from service	TRUE	FALSE	FALSE	40 CFR 61 Subpart L	UNCLASSIFIED	24-Oct-16	23-Nov-16	ARAN PARKER
COKE	R116A	Valve	Externally Actuated	Light Liquid	Difficult to Monitor	FALSE	357	6"VALVES, 4FL & 8WC OVERFLOW FROM WASH OIL DECANTER TO PUMPI	020	6	Yes, equipment can be isolated from service	TRUE	FALSE	FALSE	40 CFR 61 Subpart L	UNCLASSIFIED	24-Oct-16	23-Nov-16	ARAN PARKER
COKE	R117	Pump	Standard Service	Light Liquid	Accessible	FALSE	1276	TAR LOADING PUMP WEST	01	0	Yes, equipment can be isolated from service	TRUE	FALSE	FALSE	40 CFR 61 Subpart L	UNCLASSIFIED	24-Oct-16	23-Nov-16	ARAN PARKER
COKE	R118	Valve	Externally Actuated	Light Liquid	Accessible	FALSE	1277	6" TAR DISCHARGE VALVE WEST TAR TANK PUMPS	03	6	Yes, equipment can be isolated from service	TRUE	FALSE	FALSE	40 CFR 61 Subpart L	UNCLASSIFIED	24-Oct-16	23-Nov-16	ARAN PARKER
COKE	R119	Valve	Externally Actuated	Light Liquid	Accessible	FALSE	1366	2" TAR VALVE WEST TAR TANK (TOP OF TAR TANK)	1P02	2	Yes, equipment can be isolated from service	TRUE	FALSE	FALSE	40 CFR 61 Subpart L	UNCLASSIFIED	24-Oct-16	23-Nov-16	ARAN PARKER
COKE	R12	Valve	Externally Actuated	Light Liquid	Accessible	FALSE	1265	4" LINE TAR LOADING W/(4) 4"VALVES & 8FL	1P2	4	Yes, equipment can be isolated from service	TRUE	FALSE	FALSE	40 CFR 61 Subpart L	UNCLASSIFIED	24-Oct-16	23-Nov-16	ARAN PARKER
COKE	R120	Flange	Standard Service	Light Liquid	Accessible	FALSE	826	WASH OIL DRAIN LINES @ EAST SCRUBBER W 14 VALVES	020	4	Yes, equipment can be isolated from service	TRUE	FALSE	FALSE	40 CFR 61 Subpart L	UNCLASSIFIED	24-Oct-16	23-Nov-16	ARAN PARKER
COKE	R121	Flange	Standard Service	Light Liquid	Accessible	FALSE	421	OIL & WATER LINE TO NAPH. SUMP W/3SC	01	2	Yes, equipment can be isolated from service	TRUE	FALSE	FALSE	40 CFR 61 Subpart L	UNCLASSIFIED	24-Oct-16	23-Nov-16	ARAN PARKER
COKE	R122	Flange	Standard Service	Light Liquid	Accessible	FALSE	425	OIL & WATER LINE TO NAPH. SUMP @ PROCESS WATER DECANTER W/4S	01	4	Yes, equipment can be isolated from service	TRUE	FALSE	FALSE	40 CFR 61 Subpart L	UNCLASSIFIED	24-Oct-16	23-Nov-16	ARAN PARKER
COKE	R123	Flange	Standard Service	Light Liquid	Accessible	FALSE	397	OIL & WATER LINE TO NAPH. SUMP @ PROCESS WATER DECANTER W/4S	01	3	Yes, equipment can be isolated from service	TRUE	FALSE	FALSE	40 CFR 61 Subpart L	UNCLASSIFIED	24-Oct-16	23-Nov-16	ARAN PARKER
COKE	R124	Valve	Externally Actuated	Light Liquid	Accessible	FALSE	468	1" & 2" VALVES TAR & WATER LINE @ FINAL COOLER TO NAPH. SUMP	02	1	Yes, equipment can be isolated from service	TRUE	FALSE	FALSE	40 CFR 61 Subpart L	UNCLASSIFIED	24-Oct-16	23-Nov-16	ARAN PARKER
COKE	R124A	Valve	Externally Actuated	Light Liquid	Accessible	FALSE	469	2" VALVES TAR & WATER LINE @ FINAL COOLER TO NAPH. SUMP W/14	02	2	Yes, equipment can be isolated from service	TRUE	FALSE	FALSE	40 CFR 61 Subpart L	UNCLASSIFIED	24-Oct-16	23-Nov-16	ARAN PARKER
COKE	R125	Valve	Externally Actuated	Light Liquid	Accessible	FALSE	466	2" & ½" VALVES TAR & WATER LINE @ FINAL COOLER TO NAPH. SUMP	02	2	Yes, equipment can be isolated from service	TRUE	FALSE	FALSE	40 CFR 61 Subpart L	UNCLASSIFIED	24-Oct-16	23-Nov-16	ARAN PARKER
COKE	R125A	Valve	Externally Actuated	Light Liquid	Accessible	FALSE	467	½ VALVES TAR & WATER LINE @ FINAL COOLER TO NAPH. SUMP W/14	02	0.5	Yes, equipment can be isolated from service	TRUE	FALSE	FALSE	40 CFR 61 Subpart L	UNCLASSIFIED	24-Oct-16	23-Nov-16	ARAN PARKER
COKE	R126	Flange	Standard Service	Light Liquid	Accessible	FALSE	465	OIL LINE FROM T-702 CRUDE RESIDUE COLUMN W/4SC @ FINAL COOLE	01	2	Yes, equipment can be isolated from service	TRUE	FALSE	FALSE	40 CFR 61 Subpart L	UNCLASSIFIED	24-Oct-16	23-Nov-16	ARAN PARKER
COKE	R127	Connector	Standard Service	Light Liquid	Accessible	FALSE	770	OIL LINE FROM T-702 @ CRUDE RESIDUE COLUMN W/4SC	01	2	Yes, equipment can be isolated from service	TRUE	FALSE	FALSE	40 CFR 61 Subpart L	UNCLASSIFIED	24-Oct-16	23-Nov-16	ARAN PARKER
COKE	R128	Valve	Externally Actuated	Light Liquid	Accessible	FALSE	771	¾" VALVE OIL LINE @ T-702 CRUDE RESIDUE COLUMN W/4SC	04	0.8	Yes, equipment can be isolated from service	TRUE	FALSE	FALSE	40 CFR 61 Subpart L	UNCLASSIFIED	24-Oct-16	23-Nov-16	ARAN PARKER
COKE	R129	Valve	Externally Actuated	Light Liquid	Accessible	FALSE	772	2" & ½" VALVES OIL LINE @ T-702 CRUDE RESIDUE COLUMN W/11SC	03	0.5	Yes, equipment can be isolated from service	TRUE	FALSE	FALSE	40 CFR 61 Subpart L	UNCLASSIFIED	24-Oct-16	23-Nov-16	ARAN PARKER
COKE	R129A	Valve	Externally Actuated	Light Liquid	Accessible	FALSE	773	½" VALVES OIL LINE @ T-702 CRUDE RESIDUE COLUMN W/11SC	03	0.5	Yes, equipment can be isolated from service	TRUE	FALSE	FALSE	40 CFR 61 Subpart L	UNCLASSIFIED	24-Oct-16	23-Nov-16	ARAN PARKER
COKE	R12A	Valve	Externally Actuated	Light Liquid	Accessible	FALSE	1266	4" LINE TAR LOADING W/(4) 4"VALVES & 8FL	1P2	4	Yes, equipment can be isolated from service	TRUE	FALSE	FALSE	40 CFR 61 Subpart L	UNCLASSIFIED	24-Oct-16	23-Nov-16	ARAN PARKER
COKE	R12B	Valve	Externally Actuated	Light Liquid	Accessible	FALSE	1267	4" LINE TAR LOADING W/(4) 4"VALVES & 8FL	1P3	4	Yes, equipment can be isolated from service	TRUE	FALSE	FALSE	40 CFR 61 Subpart L	UNCLASSIFIED	24-Oct-16	23-Nov-16	ARAN PARKER
COKE	R12C	Valve	Externally Actuated	Light Liquid	Accessible	FALSE	1268	4" LINE TAR LOADING W/(4) 4"VALVES & 8FL	1P3	4	Yes, equipment can be isolated from service	TRUE	FALSE	FALSE	40 CFR 61 Subpart L	UNCLASSIFIED	24-Oct-16	23-Nov-16	ARAN PARKER
COKE	R13	Flange	Standard Service	Light Liquid	Accessible	FALSE	1264	4" TAR LOADING LINE (INSULATED) @ TAR LOADING STATION	1P3	4	Yes, equipment can be isolated from service	TRUE	FALSE	FALSE	40 CFR 61 Subpart L	UNCLASSIFIED	24-Oct-16	23-Nov-16	ARAN PARKER
COKE	R130	Valve	Externally Actuated	Light Liquid	Accessible	FALSE	767	6" VALVE WILPUTTE DECANTER TO DRAIN W/3FL & 5WC	03	6	Yes, equipment can be isolated from service	TRUE	FALSE	FALSE	40 CFR 61 Subpart L	UNCLASSIFIED	24-Oct-16	23-Nov-16	Matt Case
COKE	R131	Flange	Standard Service	Light Liquid	Accessible	FALSE	766	MANHOLE WILPUTTE DECANTER W/1FL & 2WC	04	36	Yes, equipment can be isolated from service	TRUE	FALSE	FALSE	40 CFR 61 Subpart L	UNCLASSIFIED	24-Oct-16	23-Nov-16	ARAN PARKER
COKE	R132	Valve	Externally Actuated	Light Liquid	Accessible	FALSE	762	(2) ¾" & (2) ½" VALVES & LEVEL GAUGE WILPUTTE DECANTER W/2WC	08	0.5	Yes, equipment can be isolated from service	TRUE	FALSE	FALSE	40 CFR 61 Subpart L	UNCLASSIFIED	24-Oct-16	23-Nov-16	ARAN PARKER
COKE	R132A	Valve	Externally Actuated	Light Liquid	Accessible	FALSE	763	¾" VALVES & LEVEL GAUGE WILPUTTE DECANTER W/2WC & 19SC	08	0.5	Yes, equipment can be isolated from service	TRUE	FALSE	FALSE	40 CFR 61 Subpart L	UNCLASSIFIED	24-Oct-16	23-Nov-16	ARAN PARKER
COKE	R132B	Valve	Externally Actuated	Light Liquid	Accessible	FALSE	764	½" VALVES & LEVEL GAUGE WILPUTTE DECANTER W/2WC & 19SC	08	0.5	Yes, equipment can be isolated from service	TRUE	FALSE	FALSE	40 CFR 61 Subpart L	UNCLASSIFIED	24-Oct-16	23-Nov-16	ARAN PARKER
COKE	R132C	Valve	Externally Actuated	Light Liquid	Accessible	FALSE	765	½" VALVES & LEVEL GAUGE WILPUTTE DECANTER W/2WC & 19SC	08	0.5	Yes, equipment can be isolated from service	TRUE	FALSE	FALSE	40 CFR 61 Subpart L	UNCLASSIFIED	24-Oct-16	23-Nov-16	ARAN PARKER
COKE	R133	Valve	Externally Actuated	Light Liquid	Accessible	FALSE	757	(2) ½" VALVES BENZOLIZED WASH OIL INLET @ WP DECANTER W/1WC	1P3	0.5	Yes, equipment can be isolated from service	TRUE	FALSE	FALSE	40 CFR 61 Subpart L	UNCLASSIFIED	24-Oct-16	23-Nov-16	ARAN PARKER
COKE	R133A	Valve	Externally Actuated	Light Liquid	Accessible	FALSE	758	½" VALVES BENZOLIZED WASH OIL INLET @ WP DECANTER W/1WC & 9S	1P3	0.5	Yes, equipment can be isolated from service	TRUE	FALSE	FALSE	40 CFR 61 Subpart L	UNCLASSIFIED	24-Oct-16	23-Nov-16	ARAN PARKER
COKE	R134	Flange	Standard Service	Light Liquid	Accessible	FALSE	759	MANHOLE WILPUTTE DECANTER TOP W/1FL & 2WC	1P0	36	Yes, equipment can be isolated from service	TRUE	FALSE	FALSE	40 CFR 61 Subpart L	UNCLASSIFIED	24-Oct-16	23-Nov-16	ARAN PARKER
COKE	R135	Flange	Standard Service	Light Liquid	Accessible	FALSE	635	VENT WILPUTTE DECANTER TOP W/5FL, 4WC & 10SC	1P0	6	Yes, equipment can be isolated from service	TRUE	FALSE	FALSE	40 CFR 61 Subpart L	UNCLASSIFIED	24-Oct-16	23-Nov-16	ARAN PARKER
COKE	R136	Valve	Externally Actuated	Light Liquid	Accessible	FALSE	640	6" VALVE WASH OIL LINE @ WILPUTTE DECANTER W/2FL & 9WC	1P06	6	Yes, equipment can be isolated from service	TRUE	FALSE	FALSE	40 CFR 61 Subpart L	UNCLASSIFIED	24-Oct-16	23-Nov-16	ARAN PARKER
COKE	R137	Flange	Standard Service	Light Liquid	Accessible	FALSE	760	WASH OIL LINE @ WILPUTTE DECANTER W/6WC	1P6	8	Yes, equipment can be isolated from service	TRUE	FALSE	FALSE	40 CFR 61 Subpart L	UNCLASSIFIED	24-Oct-16	23-Nov-16	ARAN PARKER

UNIT_CODE	TAG_ NUMBER	EQUITYPE_DESC	CONFIG_DESC	SERVICE_DESC	ACCESS_DESC	CLOSED_VENT _SYSTEM	ROUTE	LOCATION	LEVEL	SIZE	IFSTYPE_DESC	ATTEMPT_A LLOWED	UNDER_300_H OURS_SERVIC E	POTENTIAL_ OPEN_END	GROUP_DESC	PRODUCT_DESC	DATE_ADDED	DATE_IN_SERVICE	TECH_DESC
COKE	R138	Flange	Standard Service	Light Liquid	Accessible	FALSE	761	WASH OIL LINE @ WILPUTTE DECANTER W/1FL & 5WC	1P7	1	Yes, equipment can be isolated from service	TRUE	FALSE	FALSE	40 CFR 61 Subpart L	UNCLASSIFIED	24-Oct-16	02-Dec-16	ARAN PARKER
COKE	R139	Valve	Externally Actuated	Light Liquid	Accessible	FALSE	644	6" VALVE WASH OIL LINE @ WILPUTTE DECANTER W/2FL & 3WC	1P6	6	Yes, equipment can be isolated from service	TRUE	FALSE	FALSE	40 CFR 61 Subpart L	UNCLASSIFIED	24-Oct-16	23-Nov-16	ARAN PARKER
COKE	R14	Flange	Standard Service	Light Liquid	Accessible	FALSE	1262	4" LINE TAR LOADING VALVE	1P4	4	Yes, equipment can be isolated from service	TRUE	FALSE	FALSE	40 CFR 61 Subpart L	UNCLASSIFIED	24-Oct-16	23-Nov-16	ARAN PARKER
COKE	R140	Valve	Externally Actuated	Light Liquid	Accessible	FALSE	628	(2) 8" & AUTO VALVE WASH OIL LINE @ CONDENSERS W/5FL & 4WC	1P3	8	Yes, equipment can be isolated from service	TRUE	FALSE	FALSE	40 CFR 61 Subpart L	UNCLASSIFIED	24-Oct-16	23-Nov-16	Brent Birdwell
COKE	R140A	Valve	Externally Actuated	Light Liquid	Accessible	FALSE	629	8" & AUTO VALVE WASH OIL LINE @ CONDENSERS W/5FL & 4WC	1P3	8	Yes, equipment can be isolated from service	TRUE	FALSE	FALSE	40 CFR 61 Subpart L	UNCLASSIFIED	24-Oct-16	23-Nov-16	ARAN PARKER
COKE	R141	Valve	Externally Actuated	Light Liquid	Difficult to Monitor	FALSE	645	8" VALVE WASH OIL LINE @ WILPUTTE DECANTER W/2FL & 6WC	035	8	Yes, equipment can be isolated from service	TRUE	FALSE	FALSE	40 CFR 61 Subpart L	UNCLASSIFIED	24-Oct-16	23-Nov-16	ARAN PARKER
COKE	R142	Valve	Externally Actuated	Light Liquid	Difficult to Monitor	FALSE	656	(2) 8" VALVES WASH OIL LINE @ WILPUTTE DECANTER W/4FL & 7WC	035	8	Yes, equipment can be isolated from service	TRUE	FALSE	FALSE	40 CFR 61 Subpart L	UNCLASSIFIED	24-Oct-16	23-Nov-16	ARAN PARKER
COKE	R142A	Valve	Externally Actuated	Light Liquid	Difficult to Monitor	FALSE	657	8" VALVES WASH OIL LINE @ WILPUTTE DECANTER W/4FL & 7WC	035	8	Yes, equipment can be isolated from service	TRUE	FALSE	FALSE	40 CFR 61 Subpart L	UNCLASSIFIED	24-Oct-16	23-Nov-16	ARAN PARKER
COKE	R143	Valve	Externally Actuated	Light Liquid	Difficult to Monitor	FALSE	658	(2) 8" VALVES WASH OIL LINE @ WILPUTTE DECANTER W/ 4FL & 7WC	035	8	Yes, equipment can be isolated from service	TRUE	FALSE	FALSE	40 CFR 61 Subpart L	UNCLASSIFIED	24-Oct-16	23-Nov-16	ARAN PARKER
COKE	R143A	Valve	Externally Actuated	Light Liquid	Difficult to Monitor	FALSE	0	8" VALVES WASH OIL LINE @ WILPUTTE DECANTER W/ 4FL & 7WC	030	8	Yes, equipment can be isolated from service	TRUE	FALSE	FALSE	40 CFR 61 Subpart L	UNCLASSIFIED	24-Oct-16	23-Nov-16	ARAN PARKER
COKE	R144	Connector	Standard Service	Light Liquid	Accessible	FALSE	659	TEMP. GAUGE @ SUPER HEATER W/3FL, 6WC & 2SC	1P0	3	Yes, equipment can be isolated from service	TRUE	FALSE	FALSE	40 CFR 61 Subpart L	UNCLASSIFIED	24-Oct-16	23-Nov-16	ARAN PARKER
COKE	R145	Valve	Externally Actuated	Light Liquid	Accessible	FALSE	660	2", 1" & ½" VALVES & TEMP. GAUGE @ SUPER HEATER W/5FL, 18WC	1P5	2	Yes, equipment can be isolated from service	TRUE	FALSE	FALSE	40 CFR 61 Subpart L	UNCLASSIFIED	24-Oct-16	23-Nov-16	ARAN PARKER
COKE	R145A	Valve	Externally Actuated	Light Liquid	Accessible	FALSE	661	1" VALVES & TEMP. GAUGE @ SUPER HEATER W/5FL, 18WC & 10S	1P5	1	Yes, equipment can be isolated from service	TRUE	FALSE	FALSE	40 CFR 61 Subpart L	UNCLASSIFIED	24-Oct-16	23-Nov-16	ARAN PARKER
COKE	R145B	Valve	Externally Actuated	Light Liquid	Accessible	FALSE	662	½" VALVES & TEMP. GAUGE @ SUPER HEATER W/5FL, 18WC & 10SC	1P5	0.5	Yes, equipment can be isolated from service	TRUE	FALSE	FALSE	40 CFR 61 Subpart L	UNCLASSIFIED	24-Oct-16	23-Nov-16	ARAN PARKER
COKE	R146	Valve	Externally Actuated	Light Liquid	Accessible	FALSE	636	¾" VALVE @ SUPER HEATER W/1FL, 1WC & 4SC	12	0.8	Yes, equipment can be isolated from service	TRUE	FALSE	FALSE	40 CFR 61 Subpart L	UNCLASSIFIED	24-Oct-16	23-Nov-16	ARAN PARKER
COKE	R146C	Connector	Standard Service	Light Liquid	Accessible	FALSE	637	TEMP. GAUGE @ SUPER HEATER W/5FL, 18WC & 10SC	1P6	2	Yes, equipment can be isolated from service	TRUE	FALSE	FALSE	40 CFR 61 Subpart L	UNCLASSIFIED	24-Oct-16	23-Nov-16	ARAN PARKER
COKE	R147	Valve	Externally Actuated	Light Liquid	Accessible	FALSE	663	8" VALVE @ SUPER HEATER W/2FL & 2WC	1P3	8	Yes, equipment can be isolated from service	TRUE	FALSE	FALSE	40 CFR 61 Subpart L	UNCLASSIFIED	24-Oct-16	23-Nov-16	ARAN PARKER
COKE	R148	Valve	Externally Actuated	Light Liquid	Accessible	FALSE	655	¾" VALVE & TEMP. GAUGE OIL TO OIL HEAT EXCH. INLET W/1FL, 5W	1P2	0.8	Yes, equipment can be isolated from service	TRUE	FALSE	FALSE	40 CFR 61 Subpart L	UNCLASSIFIED	24-Oct-16	23-Nov-16	ARAN PARKER
COKE	R149	Flange	Standard Service	Light Liquid	Accessible	FALSE	653	OIL TO OIL HEAT EXCH. W/3FL, 8WC & 1SC	1P3	0	Yes, equipment can be isolated from service	TRUE	FALSE	FALSE	40 CFR 61 Subpart L	UNCLASSIFIED	24-Oct-16	23-Nov-16	ARAN PARKER
COKE	R15	Valve	Externally Actuated	Light Liquid	Accessible	FALSE	744	2"VALVE LINE FROM PURIFIER	08	2	Yes, equipment can be isolated from service	TRUE	FALSE	FALSE	40 CFR 61 Subpart L	UNCLASSIFIED	24-Oct-16	23-Nov-16	ARAN PARKER
COKE	R150	Valve	Externally Actuated	Light Liquid	Accessible	FALSE	652	8" VALVE OIL TO OIL HEAT EXCH. OUTLET W/2FL & 2WC	1P14	8	Yes, equipment can be isolated from service	TRUE	FALSE	FALSE	40 CFR 61 Subpart L	UNCLASSIFIED	24-Oct-16	23-Nov-16	ARAN PARKER
COKE	R151	Valve	Externally Actuated	Light Liquid	Accessible	FALSE	650	1" & 2" VALVES OIL TO OIL HEAT EXCH. OUTLET W/3FL, 11WC & 5S	1P14	1	Yes, equipment can be isolated from service	TRUE	FALSE	FALSE	40 CFR 61 Subpart L	UNCLASSIFIED	24-Oct-16	23-Nov-16	ARAN PARKER
COKE	R151A	Valve	Externally Actuated	Light Liquid	Accessible	FALSE	651	2" VALVES OIL TO OIL HEAT EXCH. OUTLET W/3FL, 11WC & 5SC	1P14	2	Yes, equipment can be isolated from service	TRUE	FALSE	FALSE	40 CFR 61 Subpart L	UNCLASSIFIED	24-Oct-16	23-Nov-16	ARAN PARKER
COKE	R152	Valve	Externally Actuated	Light Liquid	Accessible	FALSE	654	1" VALVE HEAT EXCH. DEBENZOLIZED OIL OUT W/1FL, 6WC & 5SC	1P3	1	Yes, equipment can be isolated from service	TRUE	FALSE	FALSE	40 CFR 61 Subpart L	UNCLASSIFIED	24-Oct-16	23-Nov-16	ARAN PARKER
COKE	R153	Flange	Standard Service	Light Liquid	Accessible	FALSE	786	#5 WASH OIL SCRUBBER SPIRAL COOLER BOTTOM INLET W/2FL & 9WC	05	36	Yes, equipment can be isolated from service	TRUE	FALSE	FALSE	40 CFR 61 Subpart L	UNCLASSIFIED	24-Oct-16	02-Dec-16	ARAN PARKER
COKE	R154	Valve	Externally Actuated	Light Liquid	Accessible	FALSE	785	4" VALVE #5 WASH OIL SCRUBBER SPIRAL COOLER TOP INLET W/3FL,	015	4	Yes, equipment can be isolated from service	TRUE	FALSE	FALSE	40 CFR 61 Subpart L	UNCLASSIFIED	24-Oct-16	23-Nov-16	Matt Case
COKE	R155	Flange	Standard Service	Light Liquid	Accessible	FALSE	782	#5 WASH OIL SCRUBBER SPIRAL COOLER TOP OUTLET W/1FL & 8WC	09	8	Yes, equipment can be isolated from service	TRUE	FALSE	FALSE	40 CFR 61 Subpart L	UNCLASSIFIED	24-Oct-16	02-Dec-16	Matt Case
COKE	R156	Flange	Standard Service	Light Liquid	Accessible	FALSE	784	#5 WASH OIL SCRUBBER SPIRAL COOLER BOTTOM OUTLET W/1FL & 6WC	00	3	Yes, equipment can be isolated from service	TRUE	FALSE	FALSE	40 CFR 61 Subpart L	UNCLASSIFIED	24-Oct-16	02-Dec-16	ARAN PARKER
COKE	R157	Valve	Externally Actuated	Light Liquid	Accessible	FALSE	783	4" VALVE #5 WASH OIL SCRUBBER SPIRAL COOLER OUTLET W/2FL, 5W	06	4	Yes, equipment can be isolated from service	TRUE	FALSE	FALSE	40 CFR 61 Subpart L	UNCLASSIFIED	24-Oct-16	23-Nov-16	ARAN PARKER
COKE	R158	Valve	Externally Actuated	Light Liquid	Accessible	FALSE	789	4" VALVE #5 WASH OIL SCRUBBER SPIRAL COOLER TOP INLET W/4FL	015	4	Yes, equipment can be isolated from service	TRUE	FALSE	FALSE	40 CFR 61 Subpart L	UNCLASSIFIED	24-Oct-16	23-Nov-16	Matt Case
COKE	R159	Flange	Standard Service	Light Liquid	Accessible	FALSE	788	#4 WASH OIL SCRUBBER SPIRAL COOLER BOTTOM INLET W/2FL & 9WC	02	3	Yes, equipment can be isolated from service	TRUE	FALSE	FALSE	40 CFR 61 Subpart L	UNCLASSIFIED	24-Oct-16	02-Dec-16	ARAN PARKER
COKE	R16	Valve	Externally Actuated	Light Liquid	Accessible	FALSE	747	2"VALVE LINE FROM PURIFIER	04	2	Yes, equipment can be isolated from service	TRUE	FALSE	FALSE	40 CFR 61 Subpart L	UNCLASSIFIED	24-Oct-16	23-Nov-16	ARAN PARKER
COKE	R160	Flange	Standard Service	Light Liquid	Accessible	FALSE	780	#4 WASH OIL SCRUBBER SPIRAL COOLER TOP OUTLET W/1FL & 7WC	010	8	Yes, equipment can be isolated from service	TRUE	FALSE	FALSE	40 CFR 61 Subpart L	UNCLASSIFIED	24-Oct-16	02-Dec-16	ARAN PARKER
COKE	R161	Flange	Standard Service	Light Liquid	Accessible	FALSE	787	#4 WASH OIL SCRUBBER SPIRAL COOLER BOTTOM OUTLET W/1FL & 6WC	02	3	Yes, equipment can be isolated from service	TRUE	FALSE	FALSE	40 CFR 61 Subpart L	UNCLASSIFIED	24-Oct-16	02-Dec-16	ARAN PARKER
COKE	R162	Valve	Externally Actuated	Light Liquid	Accessible	FALSE	781	4" VALVE #4 WASH OIL SCRUBBER SPIRAL COOLER OUTLET W/3FL, 10	06	4	Yes, equipment can be isolated from service	TRUE	FALSE	FALSE	40 CFR 61 Subpart L	UNCLASSIFIED	24-Oct-16	23-Nov-16	Matt Case
COKE	R163	Valve	Externally Actuated	Light Liquid	Difficult to Monitor	FALSE	791	4" VALVE #4 WASH OIL SCRUBBER SPIRAL COOLER INLET W/3FL & 8W	018	4	Yes, equipment can be isolated from service	TRUE	FALSE	FALSE	40 CFR 61 Subpart L	UNCLASSIFIED	24-Oct-16	23-Nov-16	Matt Case
COKE	R164	Flange	Standard Service	Light Liquid	Accessible	FALSE	806	#3 WASH OIL SCRUBBER SPIRAL COOLER W/2FL & 6WC	08	48	Yes, equipment can be isolated from service	TRUE	FALSE	FALSE	40 CFR 61 Subpart L	UNCLASSIFIED	24-Oct-16	23-Nov-16	Matt Case
COKE	R165	Flange	Standard Service	Light Liquid	Accessible	FALSE	795	#3 WASH OIL SCRUBBER SPIRAL COOLER OUTLET W/1FL, 5WC & 3SC	05	48	Yes, equipment can be isolated from service	TRUE	FALSE	FALSE	40 CFR 61 Subpart L	UNCLASSIFIED	24-Oct-16	23-Nov-16	Matt Case
COKE	R166	Valve	Externally Actuated	Light Liquid	Accessible	FALSE	805	4" VALVE #3 WASH OIL SCRUBBER SPIRAL COOLER OUTLET W/2FL & 3	04	4	Yes, equipment can be isolated from service	TRUE	FALSE	FALSE	40 CFR 61 Subpart L	UNCLASSIFIED	24-Oct-16	23-Nov-16	Matt Case
COKE	R167	Valve	Externally Actuated	Light Liquid	Accessible	FALSE	790	4" VALVE #3 WASH OIL SCRUBBER SPIRAL COOLER OUTLET W/2FL & 4	010	4	Yes, equipment can be isolated from service	TRUE	FALSE	FALSE	40 CFR 61 Subpart L	UNCLASSIFIED	24-Oct-16	23-Nov-16	ARAN PARKER
COKE	R168	Flange	Standard Service	Light Liquid	Accessible	FALSE	794	#2 WASH OIL SCRUBBER SPIRAL COOLER OUTLET W/1FL, 5WC & 3SC	05	48	Yes, equipment can be isolated from service	TRUE	FALSE	FALSE	40 CFR 61 Subpart L	UNCLASSIFIED	24-Oct-16	23-Nov-16	ARAN PARKER
COKE	R169	Flange	Standard Service	Light Liquid	Accessible	FALSE	804	#2 WASH OIL SCRUBBER SPIRAL COOLER W/2FL & 6WC	02	6	Yes, equipment can be isolated from service	TRUE	FALSE	FALSE	40 CFR 61 Subpart L	UNCLASSIFIED	24-Oct-16	02-Dec-16	ARAN PARKER
COKE	R17	Valve	Externally Actuated	Light Liquid	Accessible	FALSE	742	(2) 2"VALVES LINE FROM PURIFIER W/7FL	08	2	Yes, equipment can be isolated from service	TRUE	FALSE	FALSE	40 CFR 61 Subpart L	UNCLASSIFIED	24-Oct-16	23-Nov-16	ARAN PARKER
COKE	R170	Valve	Externally Actuated	Light Liquid	Difficult to Monitor	FALSE	793	4" VALVE #2 WASH OIL SCRUBBER SPIRAL COOLER INLET W/3FL & 8W	018	4	Yes, equipment can be isolated from service	TRUE	FALSE	FALSE	40 CFR 61 Subpart L	UNCLASSIFIED	24-Oct-16	23-Nov-16	Matt Case
COKE	R171	Valve	Externally Actuated	Light Liquid	Accessible	FALSE	792	4" VALVE #1 WASH OIL SCRUBBER SPIRAL COOLER INLET W/4FL & 9W	015	4	Yes, equipment can be isolated from service	TRUE	FALSE	FALSE	40 CFR 61 Subpart L	UNCLASSIFIED	24-Oct-16	23-Nov-16	ARAN PARKER
COKE	R172	Valve	Externally Actuated	Light Liquid	Accessible	FALSE	801	#1 WASH OIL SCRUBBER SPIRAL COOLER INLET W/2FL & 6WC	06	6	Yes, equipment can be isolated from service	TRUE	FALSE	FALSE	40 CFR 61 Subpart L	UNCLASSIFIED	24-Oct-16	02-Dec-16	Matt Case
COKE	R173	Flange	Standard Service	Light Liquid	Accessible	FALSE	800	#1 WASH OIL SCRUBBER SPIRAL COOLER OUTLET W/1FL, 5WC & 3SC	00	4	Yes, equipment can be isolated from service	TRUE	FALSE	FALSE	40 CFR 61 Subpart L	UNCLASSIFIED	24-Oct-16	02-Dec-16	ARAN PARKER
COKE	R174	Valve	Externally Actuated	Light Liquid	Accessible	FALSE	799	4" VALVE #1 WASH OIL SCRUBBER SPIRAL COOLER OUTLET W/2FL & 4	08	4	Yes, equipment can be isolated from service	TRUE	FALSE	FALSE	40 CFR 61 Subpart L	UNCLASSIFIED	24-Oct-16	23-Nov-16	ARAN PARKER
COKE	R175	Valve	Externally Actuated	Light Liquid	Accessible	FALSE	857	3" VALVE W.O. LINE FROM WILPUTTE DEC. @ SCRUBBERS W/2FL & 3W	05	3	Yes, equipment can be isolated from service	TRUE	FALSE	FALSE	40 CFR 61 Subpart L	UNCLASSIFIED	24-Oct-16	23-Nov-16	ARAN PARKER
COKE	R176	Valve	Externally Actuated	Light Liquid	Accessible	FALSE	818	6" VALVE W.O. LINE @ SCRUBBERS TO L.O. STILL W/2FL & 7WC	04	6	Yes, equipment can be isolated from service	TRUE	FALSE	FALSE	40 CFR 61 Subpart L	UNCLASSIFIED	24-Oct-16	23-Nov-16	Matt Case
COKE	R177	Valve	Externally Actuated	Light Liquid	Accessible	FALSE	817	6" VALVE W.O. LINE @ SCRUBBERS TO L.O. STILL W/2FL & 4WC	03	6	Yes, equipment can be isolated from service	TRUE	FALSE	FALSE	40 CFR 61 Subpart L	UNCLASSIFIED	24-Oct-16	23-Nov-16	ARAN PARKER
COKE	R178	Valve	Externally Actuated	Light Liquid	Accessible	FALSE	814	(2) 1" VALVES W.O. LINE @ SCRUBBERS TO L.O. STILL W/1FL, 2WC	04	1	Yes, equipment can be isolated from service	TRUE	FALSE	FALSE	40 CFR 61 Subpart L	UNCLASSIFIED	24-Oct-16	23-Nov-16	ARAN PARKER
COKE	R178A	Valve	Externally Actuated	Light Liquid	Accessible	FALSE	815	1" VALVES W.O. LINE @ SCRUBBERS TO L.O. STILL W/1FL, 2WC & 2	04	1	Yes, equipment can be isolated from service	TRUE	FALSE	FALSE	40 CFR 61 Subpart L	UNCLASSIFIED	24-Oct-16	23-Nov-16	Matt Case
COKE	R179	Valve	Externally Actuated	Light Liquid	Accessible	FALSE	813	½" VALVE WASH OIL PUMP LINE TO L.O. STILL W/1FL, 5WC & 9SC	05	0.5	Yes, equipment can be isolated from service	TRUE	FALSE	FALSE	40 CFR 61 Subpart L	UNCLASSIFIED	24-Oct-16	23-Nov-16	ARAN PARKER
COKE	R18	Valve	Externally Actuated	Light Liquid	Accessible	FALSE	748.002	VALVE LINE FROM PURIFIER	04	0.5	Yes, equipment can be isolated from service	TRUE	FALSE	FALSE	40 CFR 61 Subpart L	UNCLASSIFIED	16-Mar-18	16-Mar-18	Matt Case
COKE	R180	Valve	Externally Actuated	Light Liquid	Accessible	FALSE	812	6" VALVE W.O. LINE @ SCRUBBERS TO L.O. STILL W/2WC	06	6	Yes, equipment can be isolated from service	TRUE	FALSE	FALSE	40 CFR 61 Subpart L	UNCLASSIFIED	24-Oct-16	23-Nov-16	ARAN PARKER
COKE	R181	Valve	Externally Actuated	Light Liquid	Accessible	FALSE	816	1" & AUTO VALVE W.O. LINE TO L.O. STILL W/1FL, 7WC & 4SC	03	1	Yes, equipment can be isolated from service	TRUE	FALSE	FALSE	40 CFR 61 Subpart L	UNCLASSIFIED	24-Oct-16	23-Nov-16	ARAN PARKER
COKE	R182	Valve	Externally Actuated	Light Liquid	Accessible	FALSE	808	6" VALVE W.O. LINE TO L.O. STILL @ SCRUBBER PUMPS W/4WC	08	6	Yes, equipment can be isolated from service	TRUE	FALSE	FALSE	40 CFR 61 Subpart L	UNCLASSIFIED	24-Oct-16	23-Nov-16	ARAN PARKER
COKE	R183	Valve	Externally Actuated	Light Liquid	Accessible	FALSE	809	6" VALVE W.O. LINE TO L.O. STILL @ SCRUBBER PUMPS W/2FL & 6W	010	6	Yes, equipment can be isolated from service	TRUE	FALSE	FALSE	40 CFR 61 Subpart L	UNCLASSIFIED	24-Oct-16	23-Nov-16	ARAN PARKER
COKE	R184	Pump	Standard Service	Light Liquid	Accessible	FALSE	807	WASH OIL PUMP @ SCRUBBERS	03	0	Yes, equipment can be isolated from service	TRUE	FALSE	FALSE	40 CFR 61 Subpart L	UNCLASSIFIED	24-Oct-16	23-Nov-16	ARAN PARKER
COKE	R185	Valve	Externally Actuated	Light Liquid	Accessible	FALSE	811	4" VALVE W.O. LINE TO L.O. STILL @ SCRUBBERS W/2FL & 3WC	010	4	Yes, equipment can be isolated from service	TRUE	FALSE	FALSE	40 CFR 61 Subpart L	UNCLASSIFIED	24-Oct-16	23-Nov-16	ARAN PARKER
COKE	R186	Valve	Externally Actuated	Light Liquid	Accessible	FALSE	810	6" VALVE W.O. LINE TO L.O. STILL @ SCRUBBERS W/2FL & 5WC	010	6	Yes, equipment can be isolated from service	TRUE	FALSE	FALSE	40 CFR 61 Subpart L	UNCLASSIFIED	24-Oct-16	23-Nov-16	Matt Case
COKE	R187	Valve	Externally Actuated	Light Liquid	Accessible	FALSE	860	6" & ½" VALVES W.O. LINE TO L.O. STILL @ SCRUBBERS W/2FL, 8W	02	6	Yes, equipment can be isolated from service	TRUE	FALSE	FALSE	40 CFR 61 Subpart L	UNCLASSIFIED	24-Oct-16	23-Nov-16	ARAN PARKER
COKE	R187A	Valve	Externally Actuated	Light Liquid	Accessible	FALSE	861	½" VALVES W.O. LINE TO L.O. STILL @ SCRUBBERS W/2FL, 8WC & 7	02	0.5	Yes, equipment can be isolated from service	TRUE	FALSE	FALSE	40 CFR 61 Subpart L	UNCLASSIFIED	24-Oct-16	23-Nov-16	ARAN PARKER
COKE	R188	Valve	Externally Actuated	Light Liquid	Accessible	FALSE	859	4" VALVE WEST SCRUBBER BOTTOM W/2FL & 10WC	02	4	Yes, equipment can be isolated from service	TRUE	FALSE	FALSE	40 CFR 61 Subpart L	UNCLASSIFIED	24-Oct-16	23-Nov-16	Matt Case
COKE	R189	Valve	Externally Actuated	Light Liquid	Accessible	FALSE	858	3" VALVE WEST SCRUBBER BOTTOM W/2FL & 3WC	02	3	Yes, equipment can be isolated from service	TRUE	FALSE	FALSE	40 CFR 61 Subpart L	UNCLASSIFIED	24-Oct-16	23-Nov-16	ARAN PARKER
COKE	R19	Valve	Externally Actuated	Light Liquid	Accessible	FALSE	748.001	VALVE LINE FROM PURIFIER	04	1	Yes, equipment can be isolated from service	TRUE	FALSE	FALSE	40 CFR 61 Subpart L	UNCLASSIFIED	16-Mar-18	16-Mar-18	Matt Case
COKE	R190	Valve	Externally Actuated	Light Liquid	Accessible	FALSE	840	3" VALVE EAST SCRUBBER BOTTOM W/2FL & 3WC	04	3	Yes, equipment can be isolated from service	TRUE	FALSE	FALSE	40 CFR 61 Subpart L	UNCLASSIFIED	24-Oct-16	23-Nov-16	Matt Case
COKE	R191	Valve	Externally Actuated	Light Liquid	Accessible	FALSE	839	4" VALVE EAST SCRUBBER BOTTOM W/2FL & 9WC	04	4	Yes, equipment can be isolated from service	TRUE	FALSE	FALSE	40 CFR 61 Subpart L	UNCLASSIFIED	24-Oct-16	23-Nov-16	ARAN PARKER
COKE	R192	Valve	Externally Actuated	Light Liquid	Accessible	FALSE	837	6" & ½" VALVES EAST SCRUBBER BOTTOM W.O. LINE TO L.O. STILL	04	6	Yes, equipment can be isolated from service	TRUE	FALSE	FALSE	40 CFR 61 Subpart L	UNCLASSIFIED	24-Oct-16	23-Nov-16	ARAN PARKER
COKE	R192A	Valve	Externally Actuated	Light Liquid	Accessible	FALSE	838	½" VALVES EAST SCRUBBER BOTTOM W.O. LINE TO L.O. STILL W/2F	04	0.5	Yes, equipment can be isolated from service	TRUE	FALSE	FALSE	40 CFR 61 Subpart L	UNCLASSIFIED	24-Oct-16	23-Nov-16	ARAN PARKER
COKE	R193	Valve	Externally Actuated	Light Liquid	Accessible	FALSE	836	1" VALVE & LEVEL GAUGE EAST SCRUBBER BOTTOM W/1FL, 2WC & 7SC	06	1	Yes, equipment can be isolated from service	TRUE	FALSE	FALSE	40 CFR 61 Subpart L	UNCLASSIFIED	24-Oct-16	23-Nov-16	Matt Case
COKE	R194	Pump	Standard Service	Light Liquid	Accessible	FALSE	871	WASH OIL PUMP TO L.O. STILL @ EAST SCRUBBER	02	0	Yes, equipment can be isolated from service	TRUE	FALSE	FALSE	40 CFR 61 Subpart L	UNCLASSIFIED	24-Oct-16	23-Nov-16	ARAN PARKER
COKE	R195	Valve	Externally Actuated	Light Liquid	Accessible	FALSE	1477	6" VALVE WASH OIL LINE TO L.O STILL @ EAST SCRUBBER	03	6	Yes, equipment can be isolated from service	TRUE	FALSE	FALSE	40 CFR 61 Subpart L	UNCLASSIFIED	24-Oct-16	23-Nov-16	Matt Case
COKE	R196	Valve	Externally Actuated	Light Liquid	Accessible	FALSE	872	¼" & AUTO VALVE WASH OIL LINE TO L.O STILL @ EAST SCRUBBER W	03	0.8	Yes, equipment can be isolated from service	TRUE	FALSE	FALSE	40 CFR 61 Subpart L	UNCLASSIFIED	24-Oct-16	23-Nov-16	ARAN PARKER
COKE	R197	Valve	Externally Actuated	Light Liquid	Accessible	FALSE	868	6" VALVE WASH OIL LINE TO L.O STILL @ EAST SCRUBBER W/2FL &	04	6	Yes, equipment can be isolated from service	TRUE	FALSE	FALSE	40 CFR 61 Subpart L	UNCLASSIFIED	24-Oct-16	23-Nov-16	ARAN PARKER
COKE	R198	Valve	Externally Actuated	Light Liquid	Accessible	FALSE	873	4" VALVE WASH OIL LINE TO L.O STILL @ EAST SCRUBBER W/2FL &	04	4	Yes, equipment can be isolated from service	TRUE	FALSE	FALSE	40 CFR 61 Subpart L	UNCLASSIFIED	24-Oct-16	23-Nov-16	Matt Case
COKE	R199	Valve	Externally Actuated	Light Liquid	Accessible	FALSE	867	6" VALVE WASH OIL LINE TO L.O STILL @ EAST SCRUBBER W/2FL &	03	6	Yes, equipment can be isolated from service	TRUE	FALSE	FALSE	40 CFR 61 Subpart L	UNCLASSIFIED	24-Oct-16	23-Nov-16	ARAN PARKER

UNIT_CODE	TAG_ NUMBER	EQUITYPE_DESC	CONFIG_DESC	SERVICE_DESC	ACCESS_DESC	CLOSED_VENT _SYSTEM	ROUTE	LOCATION	LEVEL	SIZE	IFSTYPE_DESC	ATTEMPT_A LLOWED	UNDER_300_H OURS_SERVIC E	POTENTIAL_ OPEN_END	GROUP_DESC	PRODUCT_DESC	DATE_ADDED	DATE_IN_SERVICE	TECH_DESC
COKE	R2	Valve	Externally Actuated	Light Liquid	Accessible	FALSE	774	3/4"VALVE & 6SC CRUDE RESIDUE COLUMN	01	0.8	Yes, equipment can be isolated from service	TRUE	FALSE	FALSE	40 CFR 61 Subpart L	UNCLASSIFIED	24-Oct-16	23-Nov-16	ARAN PARKER
COKE	R20	Valve	Externally Actuated	Light Liquid	Accessible	FALSE	748.003	VALVE LINE FROM PURIFIER	08	2	Yes, equipment can be isolated from service	TRUE	FALSE	FALSE	40 CFR 61 Subpart L	UNCLASSIFIED	16-Mar-18	16-Mar-18	Matt Case
COKE	R200	Valve	Externally Actuated	Light Liquid	Accessible	FALSE	870	6" VALVE WASH OIL LINE TO L.O STILL @ EAST SCRUBBER W/3FL &	04	6	Yes, equipment can be isolated from service	TRUE	FALSE	FALSE	40 CFR 61 Subpart L	UNCLASSIFIED	24-Oct-16	23-Nov-16	Matt Case
COKE	R201	Valve	Externally Actuated	Light Liquid	Accessible	FALSE	874	4" & ½" VALVES & GAUGE @ L.O. STILL W/2FL, 2WC & 12SC	02	4	Yes, equipment can be isolated from service	TRUE	FALSE	FALSE	40 CFR 61 Subpart L	UNCLASSIFIED	24-Oct-16	23-Nov-16	ARAN PARKER
COKE	R201A	Valve	Externally Actuated	Light Liquid	Accessible	FALSE	875	½" VALVES & GAUGE @ L.O. STILL W/2FL, 2WC & 12SC	02	0.5	Yes, equipment can be isolated from service	TRUE	FALSE	FALSE	40 CFR 61 Subpart L	UNCLASSIFIED	24-Oct-16	23-Nov-16	ARAN PARKER
COKE	R202	Valve	Externally Actuated	Light Liquid	Accessible	FALSE	736	8" VALVE TO L.O. STILL PUMPS W/2FL & 3WC	03	8	Yes, equipment can be isolated from service	TRUE	FALSE	FALSE	40 CFR 61 Subpart L	UNCLASSIFIED	24-Oct-16	23-Nov-16	ARAN PARKER
COKE	R203	Valve	Externally Actuated	Light Liquid	Accessible	FALSE	738	3" VALVE @ L.O. STILL PUMPS W/2FL, 3WC & 6SC	05	3	Yes, equipment can be isolated from service	TRUE	FALSE	FALSE	40 CFR 61 Subpart L	UNCLASSIFIED	24-Oct-16	23-Nov-16	ARAN PARKER
COKE	R204	Pump	Standard Service	Light Liquid	Accessible	FALSE	735	NORTH LIGHT OIL STILL PUMP	03	0	Yes, equipment can be isolated from service	TRUE	FALSE	FALSE	40 CFR 61 Subpart L	UNCLASSIFIED	24-Oct-16	23-Nov-16	ARAN PARKER
COKE	R205	Valve	Externally Actuated	Light Liquid	Accessible	FALSE	733	8" VALVE TO L.O. STILL PUMPS W/5FL & 9WC	07	8	Yes, equipment can be isolated from service	TRUE	FALSE	FALSE	40 CFR 61 Subpart L	UNCLASSIFIED	24-Oct-16	23-Nov-16	ARAN PARKER
COKE	R206	Pump	Standard Service	Light Liquid	Accessible	FALSE	734	SOUTH LIGHT OIL STILL PUMP	03	0	Yes, equipment can be isolated from service	TRUE	FALSE	FALSE	40 CFR 61 Subpart L	UNCLASSIFIED	24-Oct-16	23-Nov-16	ARAN PARKER
COKE	R207	Valve	Externally Actuated	Light Liquid	Accessible	FALSE	724	(2) 1" & ½" VALVES @ L.O. STILL PUMPS W/32SC	06	1	Yes, equipment can be isolated from service	TRUE	FALSE	FALSE	40 CFR 61 Subpart L	UNCLASSIFIED	24-Oct-16	23-Nov-16	ARAN PARKER
COKE	R207A	Valve	Externally Actuated	Light Liquid	Accessible	FALSE	725	1" VALVE @ L.O. STILL PUMPS W/32SC	05	1	Yes, equipment can be isolated from service	TRUE	FALSE	FALSE	40 CFR 61 Subpart L	UNCLASSIFIED	24-Oct-16	23-Nov-16	ARAN PARKER
COKE	R207B	Valve	Externally Actuated	Light Liquid	Accessible	FALSE	726	½" VALVE @ L.O. STILL PUMPS W/32SC	05	0.5	Yes, equipment can be isolated from service	TRUE	FALSE	FALSE	40 CFR 61 Subpart L	UNCLASSIFIED	24-Oct-16	23-Nov-16	ARAN PARKER
COKE	R208	Valve	Externally Actuated	Light Liquid	Accessible	FALSE	727	8", 3" & ½" VALVES SOUTH STILL PUMP OUTLET W/6FL, 12WC & 4SC	03	8	Yes, equipment can be isolated from service	TRUE	FALSE	FALSE	40 CFR 61 Subpart L	UNCLASSIFIED	24-Oct-16	23-Nov-16	ARAN PARKER
COKE	R208A	Valve	Externally Actuated	Light Liquid	Accessible	FALSE	728	3" VALVE SOUTH STILL PUMP OUTLET W/6FL, 12WC & 4SC	02	3	Yes, equipment can be isolated from service	TRUE	FALSE	FALSE	40 CFR 61 Subpart L	UNCLASSIFIED	24-Oct-16	23-Nov-16	ARAN PARKER
COKE	R208B	Valve	Externally Actuated	Light Liquid	Accessible	FALSE	729	½" VALVE SOUTH STILL PUMP OUTLET W/6FL, 12WC & 4SC	02	0.5	Yes, equipment can be isolated from service	TRUE	FALSE	FALSE	40 CFR 61 Subpart L	UNCLASSIFIED	24-Oct-16	23-Nov-16	ARAN PARKER
COKE	R209	Valve	Externally Actuated	Light Liquid	Accessible	FALSE	730	8", 3" & ½" VALVES NORTH STILL PUMP OUTLET W/6FL, 12WC & 4SC	02	8	Yes, equipment can be isolated from service	TRUE	FALSE	FALSE	40 CFR 61 Subpart L	UNCLASSIFIED	24-Oct-16	23-Nov-16	ARAN PARKER
COKE	R209A	Valve	Externally Actuated	Light Liquid	Accessible	FALSE	731	3" VALVE NORTH STILL PUMP OUTLET W/6FL, 12WC & 4SC	02	3	Yes, equipment can be isolated from service	TRUE	FALSE	FALSE	40 CFR 61 Subpart L	UNCLASSIFIED	24-Oct-16	23-Nov-16	ARAN PARKER
COKE	R209B	Valve	Externally Actuated	Light Liquid	Accessible	FALSE	732	½" VALVE NORTH STILL PUMP OUTLET W/6FL, 12WC & 4SC	02	0.5	Yes, equipment can be isolated from service	TRUE	FALSE	FALSE	40 CFR 61 Subpart L	UNCLASSIFIED	24-Oct-16	23-Nov-16	ARAN PARKER
COKE	R21	Valve	Externally Actuated	Light Liquid	Accessible	FALSE	743	LINE FROM PURIFIER	08	1.5	Yes, equipment can be isolated from service	TRUE	FALSE	FALSE	40 CFR 61 Subpart L	UNCLASSIFIED	24-Oct-16	23-Nov-16	Matt Case
COKE	R210	Valve	Externally Actuated	Light Liquid	Accessible	FALSE	737	8" VALVE NORTH STILL PUMP INLET W/5FL & 11WC	04	8	Yes, equipment can be isolated from service	TRUE	FALSE	FALSE	40 CFR 61 Subpart L	UNCLASSIFIED	24-Oct-16	23-Nov-16	ARAN PARKER
COKE	R211	Flange	Standard Service	Light Liquid	Accessible	FALSE	775	MANHOLE LIGHT OIL STILL BOTTOM W/2FL & 2WC	08	36	Yes, equipment can be isolated from service	TRUE	FALSE	FALSE	40 CFR 61 Subpart L	UNCLASSIFIED	24-Oct-16	23-Nov-16	ARAN PARKER
COKE	R212	Valve	Externally Actuated	Light Liquid	Accessible	FALSE	776	(4) ¾" VALVES & LEVEL GAUGE L.O. STILL BOTTOM W/9SC	05	0.8	Yes, equipment can be isolated from service	TRUE	FALSE	FALSE	40 CFR 61 Subpart L	UNCLASSIFIED	24-Oct-16	23-Nov-16	ARAN PARKER
COKE	R212A	Valve	Externally Actuated	Light Liquid	Accessible	FALSE	777	¾" VALVES & LEVEL GAUGE L.O. STILL BOTTOM W/9SC	05	0.8	Yes, equipment can be isolated from service	TRUE	FALSE	FALSE	40 CFR 61 Subpart L	UNCLASSIFIED	24-Oct-16	23-Nov-16	ARAN PARKER
COKE	R212B	Valve	Externally Actuated	Light Liquid	Accessible	FALSE	778	¾" VALVES & LEVEL GAUGE L.O. STILL BOTTOM W/9SC	05	0.8	Yes, equipment can be isolated from service	TRUE	FALSE	FALSE	40 CFR 61 Subpart L	UNCLASSIFIED	24-Oct-16	23-Nov-16	ARAN PARKER
COKE	R212C	Valve	Externally Actuated	Light Liquid	Accessible	FALSE	779	¾" VALVES & LEVEL GAUGE L.O. STILL BOTTOM W/9SC	05	0.8	Yes, equipment can be isolated from service	TRUE	FALSE	FALSE	40 CFR 61 Subpart L	UNCLASSIFIED	24-Oct-16	23-Nov-16	ARAN PARKER
COKE	R213	Pump	Standard Service	Light Liquid	Accessible	FALSE	739	DIRTY WATER TRANSFER BASIN PUMP	01	0	Yes, equipment can be isolated from service	TRUE	FALSE	FALSE	40 CFR 61 Subpart L	UNCLASSIFIED	24-Oct-16	23-Nov-16	Matt Case
COKE	R214	Pump	Standard Service	Light Liquid	Accessible	FALSE	740	PORTABLE DITCH PUMP @ PURIFIER	01	0	Yes, equipment can be isolated from service	TRUE	FALSE	FALSE	40 CFR 61 Subpart L	UNCLASSIFIED	24-Oct-16	23-Nov-16	Matt Case
COKE	R215	Pump	Standard Service	Light Liquid	Accessible	FALSE	841	PORTABLE DITCH PUMP @ SCRUBBERS	01	0	Yes, equipment can be isolated from service	TRUE	FALSE	FALSE	40 CFR 61 Subpart L	UNCLASSIFIED	24-Oct-16	23-Nov-16	Matt Case
COKE	R216	Flange	Standard Service	Light Liquid	Accessible	FALSE	953	PRIMARY COOLER CIRCULATION PUMP (STEAM)	02	12	Yes, equipment can be isolated from service	TRUE	FALSE	FALSE	40 CFR 61 Subpart L	UNCLASSIFIED	24-Oct-16	23-Nov-16	ARAN PARKER
COKE	R217	Pump	Standard Service	Light Liquid	Accessible	FALSE	955	PRIMARY COOLER CIRCULATION PUMP (ELECTRIC)	02	0	Yes, equipment can be isolated from service	TRUE	FALSE	FALSE	40 CFR 61 Subpart L	UNCLASSIFIED	24-Oct-16	23-Nov-16	ARAN PARKER
COKE	R218	Pump	Standard Service	Light Liquid	Accessible	FALSE	954	PRIMARY COOLER RE-SPRAY PUMP (NORTH)	02	0	Yes, equipment can be isolated from service	TRUE	FALSE	FALSE	40 CFR 61 Subpart L	UNCLASSIFIED	24-Oct-16	23-Nov-16	ARAN PARKER
COKE	R219	Pump	Standard Service	Light Liquid	Accessible	FALSE	961	PRIMARY COOLER RE-SPRAY PUMP (SOUTH)	02	0	Yes, equipment can be isolated from service	TRUE	FALSE	FALSE	40 CFR 61 Subpart L	UNCLASSIFIED	24-Oct-16	23-Nov-16	ARAN PARKER
COKE	R22	Valve	Externally Actuated	Light Liquid	Accessible	FALSE	748.004	VALVE LINE FROM PURIFIER	08	2	Yes, equipment can be isolated from service	TRUE	FALSE	FALSE	40 CFR 61 Subpart L	UNCLASSIFIED	16-Mar-18	16-Mar-18	Matt Case
COKE	R220	Pump	Standard Service	Light Liquid	Accessible	FALSE	1090	PRIMARY COOLER SUMP PUMP (WEST)	02	0	Yes, equipment can be isolated from service	TRUE	FALSE	FALSE	40 CFR 61 Subpart L	UNCLASSIFIED	24-Oct-16	23-Nov-16	ARAN PARKER
COKE	R221	Pump	Standard Service	Light Liquid	Accessible	FALSE	1091	PRIMARY COOLER SUMP PUMP (EAST)	02	0	Yes, equipment can be isolated from service	TRUE	FALSE	FALSE	40 CFR 61 Subpart L	UNCLASSIFIED	24-Oct-16	23-Nov-16	ARAN PARKER
COKE	R223	Pump	Standard Service	Light Liquid	Accessible	FALSE	1117	FLUSHING LIQUOR PUMP (EAST)	02	0	Yes, equipment can be isolated from service	TRUE	FALSE	FALSE	40 CFR 61 Subpart L	UNCLASSIFIED	24-Oct-16	23-Nov-16	ARAN PARKER
COKE	R224	Pump	Standard Service	Light Liquid	Accessible	FALSE	1123	FLUSHING LIQUOR PUMP (MIDDLE)	02	0	Yes, equipment can be isolated from service	TRUE	FALSE	FALSE	40 CFR 61 Subpart L	UNCLASSIFIED	24-Oct-16	23-Nov-16	ARAN PARKER
COKE	R225	Pump	Standard Service	Light Liquid	Accessible	FALSE	1132	FLUSHING LIQUOR PUMP (WEST)	02	0	Yes, equipment can be isolated from service	TRUE	FALSE	FALSE	40 CFR 61 Subpart L	UNCLASSIFIED	24-Oct-16	23-Nov-16	ARAN PARKER
COKE	R226	Pump	Standard Service	Light Liquid	Accessible	FALSE	1101	TAR TRANSFER PUMP (EAST)	02	0	Yes, equipment can be isolated from service	TRUE	FALSE	FALSE	40 CFR 61 Subpart L	UNCLASSIFIED	24-Oct-16	23-Nov-16	ARAN PARKER
COKE	R227	Pump	Standard Service	Light Liquid	Accessible	FALSE	1100	TAR TRANSFER PUMP (WEST)	02	0	Yes, equipment can be isolated from service	TRUE	FALSE	FALSE	40 CFR 61 Subpart L	UNCLASSIFIED	24-Oct-16	23-Nov-16	ARAN PARKER
COKE	R228	Valve	Externally Actuated	Light Liquid	Difficult to Monitor	FALSE	911	6" VALVE #1 SPIRAL COOLER @ PRIMARY COOLER INLET W/3FL & 9WC	020	6	Yes, equipment can be isolated from service	TRUE	FALSE	FALSE	40 CFR 61 Subpart L	UNCLASSIFIED	24-Oct-16	23-Nov-16	ARAN PARKER
COKE	R229	Valve	Externally Actuated	Light Liquid	Accessible	FALSE	912	6" & 1 ½" VALVES #2 SPIRAL COOLER @ PRIMARY COOLER INLET W/	05	6	Yes, equipment can be isolated from service	TRUE	FALSE	FALSE	40 CFR 61 Subpart L	UNCLASSIFIED	24-Oct-16	23-Nov-16	Brent Birdwell
COKE	R229A	Valve	Externally Actuated	Light Liquid	Accessible	FALSE	913	1 ½" VALVE #2 SPIRAL COOLER @ PRIMARY COOLER INLET W/3FL, 8W	05	1.5	Yes, equipment can be isolated from service	TRUE	FALSE	FALSE	40 CFR 61 Subpart L	UNCLASSIFIED	24-Oct-16	23-Nov-16	Brent Birdwell
COKE	R23	Valve	Externally Actuated	Light Liquid	Accessible	FALSE	743.007	LINE FROM PURIFIER	08	1.5	Yes, equipment can be isolated from service	TRUE	FALSE	FALSE	40 CFR 61 Subpart L	UNCLASSIFIED	16-Mar-18	16-Mar-18	Matt Case
COKE	R230	Valve	Externally Actuated	Light Liquid	Accessible	FALSE	914	6", 1 ½" & ½" VALVES #1 SPIRAL COOLER @ PRIMARY COOLER OUT.	07	6	Yes, equipment can be isolated from service	TRUE	FALSE	FALSE	40 CFR 61 Subpart L	UNCLASSIFIED	24-Oct-16	23-Nov-16	Brent Birdwell
COKE	R230A	Valve	Externally Actuated	Light Liquid	Accessible	FALSE	915	1 ½" VALVE #1 SPIRAL COOLER @ PRIMARY COOLER OUT. W/3FL, 10W	07	1.5	Yes, equipment can be isolated from service	TRUE	FALSE	FALSE	40 CFR 61 Subpart L	UNCLASSIFIED	24-Oct-16	23-Nov-16	Brent Birdwell
COKE	R230B	Valve	Externally Actuated	Light Liquid	Accessible	FALSE	916	½" VALVE #1 SPIRAL COOLER @ PRIMARY COOLER OUT. W/3FL, 10WC	07	0.5	Yes, equipment can be isolated from service	TRUE	FALSE	FALSE	40 CFR 61 Subpart L	UNCLASSIFIED	24-Oct-16	23-Nov-16	Brent Birdwell
COKE	R231	Valve	Externally Actuated	Light Liquid	Accessible	FALSE	917	6", 1 ½" & ½" VALVES #2 SPIRAL COOLER @ PRIMARY COOLER OUT.	03	6	Yes, equipment can be isolated from service	TRUE	FALSE	FALSE	40 CFR 61 Subpart L	UNCLASSIFIED	24-Oct-16	23-Nov-16	Brent Birdwell
COKE	R231A	Valve	Externally Actuated	Light Liquid	Accessible	FALSE	918	1 ½" VALVE #2 SPIRAL COOLER @ PRIMARY COOLER OUT. W/3FL, 12W	03	1.5	Yes, equipment can be isolated from service	TRUE	FALSE	FALSE	40 CFR 61 Subpart L	UNCLASSIFIED	24-Oct-16	23-Nov-16	Brent Birdwell
COKE	R231B	Valve	Externally Actuated	Light Liquid	Accessible	FALSE	919	½" VALVE #2 SPIRAL COOLER @ PRIMARY COOLER OUT. W/3FL, 12WC	03	0.5	Yes, equipment can be isolated from service	TRUE	FALSE	FALSE	40 CFR 61 Subpart L	UNCLASSIFIED	24-Oct-16	23-Nov-16	Brent Birdwell
COKE	R232	Valve	Externally Actuated	Light Liquid	Difficult to Monitor	FALSE	920	6" VALVE #3 SPIRAL COOLER @ PRIMARY COOLER INLET W/3FL & 9WC	025	6	Yes, equipment can be isolated from service	TRUE	FALSE	FALSE	40 CFR 61 Subpart L	UNCLASSIFIED	24-Oct-16	23-Nov-16	ARAN PARKER
COKE	R233	Valve	Externally Actuated	Light Liquid	Accessible	FALSE	921	6" & 1 ½" VALVES #4 SPIRAL COOLER @ PRIMARY COOLER INLET W/3	05	6	Yes, equipment can be isolated from service	TRUE	FALSE	FALSE	40 CFR 61 Subpart L	UNCLASSIFIED	24-Oct-16	23-Nov-16	Brent Birdwell
COKE	R233A	Valve	Externally Actuated	Light Liquid	Accessible	FALSE	922	1 ½" VALVES #4 SPIRAL COOLER @ PRIMARY COOLER INLET W/3FL, 8	06	1.5	Yes, equipment can be isolated from service	TRUE	FALSE	FALSE	40 CFR 61 Subpart L	UNCLASSIFIED	24-Oct-16	23-Nov-16	Brent Birdwell
COKE	R234	Valve	Externally Actuated	Light Liquid	Accessible	FALSE	923	6", 1 ½" & ½" VALVES #3 SPIRAL COOLER @ PRIMARY COOLER OUT.	07	6	Yes, equipment can be isolated from service	TRUE	FALSE	FALSE	40 CFR 61 Subpart L	UNCLASSIFIED	24-Oct-16	23-Nov-16	Brent Birdwell
COKE	R234A	Valve	Externally Actuated	Light Liquid	Accessible	FALSE	924	1 ½" VALVE #3 SPIRAL COOLER @ PRIMARY COOLER OUT. W/3FL, 13W	07	1.5	Yes, equipment can be isolated from service	TRUE	FALSE	FALSE	40 CFR 61 Subpart L	UNCLASSIFIED	24-Oct-16	23-Nov-16	Brent Birdwell
COKE	R234B	Valve	Externally Actuated	Light Liquid	Accessible	FALSE	925	½" VALVE #3 SPIRAL COOLER @ PRIMARY COOLER OUT. W/3FL, 13WC	07	0.5	Yes, equipment can be isolated from service	TRUE	FALSE	FALSE	40 CFR 61 Subpart L	UNCLASSIFIED	24-Oct-16	23-Nov-16	Brent Birdwell
COKE	R235	Valve	Externally Actuated	Light Liquid	Accessible	FALSE	926	6", 1 ½" & ½" VALVES #4 SPIRAL COOLER @ PRIMARY COOLER OUT.	03	6	Yes, equipment can be isolated from service	TRUE	FALSE	FALSE	40 CFR 61 Subpart L	UNCLASSIFIED	24-Oct-16	23-Nov-16	Brent Birdwell
COKE	R235A	Valve	Externally Actuated	Light Liquid	Accessible	FALSE	927	1 ½" VALVE #4 SPIRAL COOLER @ PRIMARY COOLER OUT. W/3FL, 12W	03	1.5	Yes, equipment can be isolated from service	TRUE	FALSE	FALSE	40 CFR 61 Subpart L	UNCLASSIFIED	24-Oct-16	23-Nov-16	Brent Birdwell
COKE	R235B	Valve	Externally Actuated	Light Liquid	Accessible	FALSE	928	½" VALVE #4 SPIRAL COOLER @ PRIMARY COOLER OUT. W/3FL, 12WC	03	0.5	Yes, equipment can be isolated from service	TRUE	FALSE	FALSE	40 CFR 61 Subpart L	UNCLASSIFIED	24-Oct-16	23-Nov-16	Brent Birdwell
COKE	R236	Valve	Externally Actuated	Light Liquid	Accessible	FALSE	929	6" VALVE #5 SPIRAL COOLER @ PRIMARY COOLER INLET W/3FL & 9WC	015	6	Yes, equipment can be isolated from service	TRUE	FALSE	FALSE	40 CFR 61 Subpart L	UNCLASSIFIED	24-Oct-16	23-Nov-16	ARAN PARKER
COKE	R237	Valve	Externally Actuated	Light Liquid	Accessible	FALSE	930	6" & 1 ½" VALVES #6 SPIRAL COOLER @ PRIMARY COOLER INLET W/3	015	6	Yes, equipment can be isolated from service	TRUE	FALSE	FALSE	40 CFR 61 Subpart L	UNCLASSIFIED	24-Oct-16	23-Nov-16	ARAN PARKER
COKE	R237A	Valve	Externally Actuated	Light Liquid	Accessible	FALSE	931	1 ½" VALVES #6 SPIRAL COOLER @ PRIMARY COOLER INLET W/3FL,	06	1.5	Yes, equipment can be isolated from service	TRUE	FALSE	FALSE	40 CFR 61 Subpart L	UNCLASSIFIED	24-Oct-16	23-Nov-16	Brent Birdwell
COKE	R238	Valve	Externally Actuated	Light Liquid	Accessible	FALSE	932	6", 1 ½" & ½" VALVES #5 SPIRAL COOLER @ PRIMARY COOLER OUT.	07	6	Yes, equipment can be isolated from service	TRUE	FALSE	FALSE	40 CFR 61 Subpart L	UNCLASSIFIED	24-Oct-16	23-Nov-16	Brent Birdwell
COKE	R238A	Valve	Externally Actuated	Light Liquid	Accessible	FALSE	933	1 ½" VALVE #5 SPIRAL COOLER @ PRIMARY COOLER OUT. W/3FL, 13W	07	1.5	Yes, equipment can be isolated from service	TRUE	FALSE	FALSE	40 CFR 61 Subpart L	UNCLASSIFIED	24-Oct-16	23-Nov-16	Brent Birdwell
COKE	R238B	Valve	Externally Actuated	Light Liquid	Accessible	FALSE	932.001	6", 1 ½" & ½" VALVES #5 SPIRAL COOLER @ PRIMARY COOLER OUT.	07	0.5	Yes, equipment can be isolated from service	TRUE	FALSE	FALSE	40 CFR 61 Subpart L	UNCLASSIFIED	15-Mar-18	15-Mar-18	Brent Birdwell
COKE	R239	Valve	Externally Actuated	Light Liquid	Accessible	FALSE	934	6", 1 ½" & ½" VALVES #6 SPIRAL COOLER @ PRIMARY COOLER OUT.	02	6	Yes, equipment can be isolated from service	TRUE	FALSE	FALSE	40 CFR 61 Subpart L	UNCLASSIFIED	24-Oct-16	23-Nov-16	Brent Birdwell
COKE	R239A	Valve	Externally Actuated	Light Liquid	Accessible	FALSE	935	½" VALVE #6 SPIRAL COOLER @ PRIMARY COOLER OUT. W/3FL, 11WC	02	0.5	Yes, equipment can be isolated from service	TRUE	FALSE	FALSE	40 CFR 61 Subpart L	UNCLASSIFIED	24-Oct-16	23-Nov-16	Brent Birdwell
COKE	R239B	Valve	Externally Actuated	Light Liquid	Accessible	FALSE	936	½" VALVE #5 SPIRAL COOLER @ PRIMARY COOLER OUT. W/3FL, 13WC	02	1.5	Yes, equipment can be isolated from service	TRUE	FALSE	FALSE	40 CFR 61 Subpart L	UNCLASSIFIED	24-Oct-16	23-Nov-16	Brent Birdwell
COKE	R24	Valve	Externally Actuated	Light Liquid	Accessible	FALSE	283	6" VALVE PROCESS WATER COOLING TOWER OUTLET W/ 4FL, 18WC & 2	1P5	6	Yes, equipment can be isolated from service	TRUE	FALSE	FALSE	40 CFR 61 Subpart L	UNCLASSIFIED	24-Oct-16	23-Nov-16	ARAN PARKER
COKE	R240	Valve	Externally Actuated	Light Liquid	Accessible	FALSE	1001	6" VALVES #7 SPIRAL COOLER @ PRIMARY COOLER INLET W/3FL	09	6	Yes, equipment can be isolated from service	TRUE	FALSE	FALSE	40 CFR 61 Subpart L	UNCLASSIFIED	24-Oct-16	23-Nov-16	Matt Case
COKE	R240A	Valve	Externally Actuated	Light Liquid	Accessible	FALSE	1002	6" VALVES #7 SPIRAL COOLER @ PRIMARY COOLER INLET W/3FL & 8W	08	6	Yes, equipment can be isolated from service	TRUE	FALSE	FALSE	40 CFR 61 Subpart L	UNCLASSIFIED	24-Oct-16	23-Nov-16	ARAN PARKER
COKE	R241	Valve	Externally Actuated	Light Liquid	Accessible	FALSE	1007	6" & 1 ½" VALVES #8 SPIRAL COOLER @ PRIMARY COOLER INLET W/3	04	6	Yes, equipment can be isolated from service	TRUE	FALSE	FALSE	40 CFR 61 Subpart L	UNCLASSIFIED	24-Oct-16	23-Nov-16	ARAN PARKER
COKE	R241A	Valve	Externally Actuated	Light Liquid	Accessible	FALSE	1008	1 ½" VALVES #8 SPIRAL COOLER @ PRIMARY COOLER INLET W/3FL,	04	1.5	Yes, equipment can be isolated from service	TRUE	FALSE	FALSE	40 CFR 61 Subpart L	UNCLASSIFIED	24-Oct-16	23-Nov-16	ARAN PARKER
COKE	R242	Valve	Externally Actuated	Light Liquid	Accessible	FALSE	1003	6" VALVE #7 SPIRAL COOLER @ PRIMARY COOLER OUTLET W/ 3FL, 13	010	6	Yes, equipment can be isolated from service	TRUE	FALSE	FALSE	40 CFR 61 Subpart L	UNCLASSIFIED	24-Oct-16	23-Nov-16	ARAN PARKER
COKE	R243	Valve	Externally Actuated	Light Liquid	Accessible	FALSE	1004	6", 1 ½" & ½" VALVES #8 SPIRAL COOLER @ PRIMARY COOLER OUT.	06	6	Yes, equipment can be isolated from service	TRUE	FALSE	FALSE	40 CFR 61 Subpart L	UNCLASSIFIED	24-Oct-16	23-Nov-16	ARAN PARKER
COKE	R243A	Valve	Externally Actuated	Light Liquid	Accessible	FALSE	1005	1 ½" VALVE #8 SPIRAL COOLER @ PRIMARY COOLER OUT. W/3FL, 13W	06	1.5	Yes, equipment can be isolated from service	TRUE	FALSE	FALSE	40 CFR 61 Subpart L	UNCLASSIFIED	24-Oct-16	23-Nov-16	ARAN PARKER
COKE	R243B	Valve	Externally Actuated	Light Liquid	Accessible	FALSE	1006	½" VALVE #8 SPIRAL COOLER @ PRIMARY COOLER OUT. W/3FL, 13WC	06	0.5	Yes, equipment can be isolated from service	TRUE	FALSE	FALSE	40 CFR 61 Subpart L	UNCLASSIFIED	24-Oct-16	23-Nov-16	Matt Case

UNIT_CODE	TAG_ NUMBER	EQUITYPE_DESC	CONFIG_DESC	SERVICE_DESC	ACCESS_DESC	CLOSED_VENT _SYSTEM	ROUTE	LOCATION	LEVEL	SIZE	IFSTYPE_DESC	ATTEMPT_A LLOWED	UNDER_300_H OURS_SERVIC E	POTENTIAL_ OPEN_END	GROUP_DESC	PRODUCT_DESC	DATE_ADDED	DATE_IN_SERVICE	TECH_DESC
COKE	R244	Valve	Externally Actuated	Light Liquid	Accessible	FALSE	1012	6" VALVE #9 SPIRAL COOLER @ PRIMARY COOLER INLET W/3FL & 9WC	010	6	Yes, equipment can be isolated from service	TRUE	FALSE	FALSE	40 CFR 61 Subpart L	UNCLASSIFIED	24-Oct-16	23-Nov-16	Brent Birdwell
COKE	R245	Valve	Externally Actuated	Light Liquid	Accessible	FALSE	1013	6" & 1 ½" VALVES #10 SPIRAL COOLER @ PRIMARY COOLER INLET W/	05	6	Yes, equipment can be isolated from service	TRUE	FALSE	FALSE	40 CFR 61 Subpart L	UNCLASSIFIED	24-Oct-16	23-Nov-16	Brent Birdwell
COKE	R245A	Valve	Externally Actuated	Light Liquid	Accessible	FALSE	1014	1 ½" VALVES #10 SPIRAL COOLER @ PRIMARY COOLER INLET W/3FL,	05	1.5	Yes, equipment can be isolated from service	TRUE	FALSE	FALSE	40 CFR 61 Subpart L	UNCLASSIFIED	24-Oct-16	23-Nov-16	Brent Birdwell
COKE	R246	Valve	Externally Actuated	Light Liquid	Accessible	FALSE	1009	6", 1 ½" & ½" VALVES #9 SPIRAL COOLER @ PRIMARY COOLER OUT.	07	6	Yes, equipment can be isolated from service	TRUE	FALSE	FALSE	40 CFR 61 Subpart L	UNCLASSIFIED	24-Oct-16	23-Nov-16	Brent Birdwell
COKE	R246A	Valve	Externally Actuated	Light Liquid	Accessible	FALSE	1010	½" VALVE #9 SPIRAL COOLER @ PRIMARY COOLER OUT. W/3FL, 14WC	07	0.5	Yes, equipment can be isolated from service	TRUE	FALSE	FALSE	40 CFR 61 Subpart L	UNCLASSIFIED	24-Oct-16	23-Nov-16	Brent Birdwell
COKE	R246B	Valve	Externally Actuated	Light Liquid	Accessible	FALSE	1011	1 ½" VALVE #9 SPIRAL COOLER @ PRIMARY COOLER OUT. W/3FL, 14W	07	0.5	Yes, equipment can be isolated from service	TRUE	FALSE	FALSE	40 CFR 61 Subpart L	UNCLASSIFIED	24-Oct-16	23-Nov-16	Brent Birdwell
COKE	R247	Valve	Externally Actuated	Light Liquid	Accessible	FALSE	501	6", 1 ½" & ½" VALVES #10 SPIRAL COOLER @ PRIMARY COOLER OUT.	03	6	Yes, equipment can be isolated from service	TRUE	FALSE	FALSE	40 CFR 61 Subpart L	UNCLASSIFIED	24-Oct-16	23-Nov-16	ARAN PARKER
COKE	R248	Valve	Externally Actuated	Light Liquid	Accessible	FALSE	951	(2) 14" VALVES @ NORTH PRIMARY COOLER TO PUMP W/5FL & 12WC	010	14	Yes, equipment can be isolated from service	TRUE	FALSE	FALSE	40 CFR 61 Subpart L	UNCLASSIFIED	24-Oct-16	23-Nov-16	ARAN PARKER
COKE	R248A	Valve	Externally Actuated	Light Liquid	Accessible	FALSE	952	14" VALVES @ NORTH PRIMARY COOLER TO PUMP W/5FL & 12WC	010	14	Yes, equipment can be isolated from service	TRUE	FALSE	FALSE	40 CFR 61 Subpart L	UNCLASSIFIED	24-Oct-16	23-Nov-16	ARAN PARKER
COKE	R249	Valve	Externally Actuated	Light Liquid	Accessible	FALSE	945	12", 1 ½" & (2) ½" VALVES NORTH PRIMARY COOLER PUMP OUTLET W	012	12	Yes, equipment can be isolated from service	TRUE	FALSE	FALSE	40 CFR 61 Subpart L	UNCLASSIFIED	24-Oct-16	23-Nov-16	ARAN PARKER
COKE	R249A	Valve	Externally Actuated	Light Liquid	Accessible	FALSE	946	1 ½" VALVES NORTH PRIMARY COOLER PUMP OUTLET W/4FL, 6WC & 12	012	1.5	Yes, equipment can be isolated from service	TRUE	FALSE	FALSE	40 CFR 61 Subpart L	UNCLASSIFIED	24-Oct-16	23-Nov-16	ARAN PARKER
COKE	R249B	Valve	Externally Actuated	Light Liquid	Accessible	FALSE	947	½" VALVES NORTH PRIMARY COOLER PUMP OUTLET W/4FL, 6WC & 12S	012	0.5	Yes, equipment can be isolated from service	TRUE	FALSE	FALSE	40 CFR 61 Subpart L	UNCLASSIFIED	24-Oct-16	23-Nov-16	ARAN PARKER
COKE	R249C	Valve	Externally Actuated	Light Liquid	Accessible	FALSE	948	½" VALVES NORTH PRIMARY COOLER PUMP OUTLET W/4FL, 6WC & 1	012	0.5	Yes, equipment can be isolated from service	TRUE	FALSE	FALSE	40 CFR 61 Subpart L	UNCLASSIFIED	24-Oct-16	23-Nov-16	ARAN PARKER
COKE	R25	Valve	Externally Actuated	Light Liquid	Accessible	FALSE	282	6" VALVE PROCESS WATER COOLING TOWER INLET W/ 4FL, 23WC & 3	1P5	6	Yes, equipment can be isolated from service	TRUE	FALSE	FALSE	40 CFR 61 Subpart L	UNCLASSIFIED	24-Oct-16	23-Nov-16	ARAN PARKER
COKE	R250	Valve	Externally Actuated	Light Liquid	Accessible	FALSE	962	(2) 14" VALVES SOUTH PRIMARY COOLER OUT TO PUMP W/5FL & 12WC	06	14	Yes, equipment can be isolated from service	TRUE	FALSE	FALSE	40 CFR 61 Subpart L	UNCLASSIFIED	24-Oct-16	23-Nov-16	ARAN PARKER
COKE	R250A	Valve	Externally Actuated	Light Liquid	Accessible	FALSE	963	14" VALVES SOUTH PRIMARY COOLER OUT TO PUMP W/5FL & 12WC	06	14	Yes, equipment can be isolated from service	TRUE	FALSE	FALSE	40 CFR 61 Subpart L	UNCLASSIFIED	24-Oct-16	23-Nov-16	ARAN PARKER
COKE	R251	Valve	Externally Actuated	Light Liquid	Accessible	FALSE	956	12", 1 ½" & (3) ½" VALVES SOUTH PRIMARY COOLER PUMP OUTLET W	08	12	Yes, equipment can be isolated from service	TRUE	FALSE	FALSE	40 CFR 61 Subpart L	UNCLASSIFIED	24-Oct-16	23-Nov-16	ARAN PARKER
COKE	R251A	Valve	Externally Actuated	Light Liquid	Accessible	FALSE	957	1 ½" VALVES SOUTH PRIMARY COOLER PUMP OUTLET W/5FL, 10WC &	08	1.5	Yes, equipment can be isolated from service	TRUE	FALSE	FALSE	40 CFR 61 Subpart L	UNCLASSIFIED	24-Oct-16	23-Nov-16	ARAN PARKER
COKE	R251B	Valve	Externally Actuated	Light Liquid	Accessible	FALSE	958	½" VALVES SOUTH PRIMARY COOLER PUMP OUTLET W/5FL, 10WC & 1	08	0.5	Yes, equipment can be isolated from service	TRUE	FALSE	FALSE	40 CFR 61 Subpart L	UNCLASSIFIED	24-Oct-16	23-Nov-16	ARAN PARKER
COKE	R251C	Valve	Externally Actuated	Light Liquid	Accessible	FALSE	959	½" VALVES SOUTH PRIMARY COOLER PUMP OUTLET W/5FL, 10WC & 1	08	0.5	Yes, equipment can be isolated from service	TRUE	FALSE	FALSE	40 CFR 61 Subpart L	UNCLASSIFIED	24-Oct-16	23-Nov-16	ARAN PARKER
COKE	R251D	Valve	Externally Actuated	Light Liquid	Accessible	FALSE	960	½" VALVES SOUTH PRIMARY COOLER PUMP OUTLET W/5FL, 10WC & 1	08	0.5	Yes, equipment can be isolated from service	TRUE	FALSE	FALSE	40 CFR 61 Subpart L	UNCLASSIFIED	24-Oct-16	23-Nov-16	ARAN PARKER
COKE	R252	Valve	Externally Actuated	Light Liquid	Accessible	FALSE	987	10" & 1 ½" VALVES NORTH PRIMARY COOLER RE-SPRAY PUMP INLET W	07	10	Yes, equipment can be isolated from service	TRUE	FALSE	FALSE	40 CFR 61 Subpart L	UNCLASSIFIED	24-Oct-16	23-Nov-16	ARAN PARKER
COKE	R252A	Valve	Externally Actuated	Light Liquid	Accessible	FALSE	988	1 ½" VALVES NORTH PRIMARY COOLER RE-SPRAY PUMP INLET W/3FL,	07	1.5	Yes, equipment can be isolated from service	TRUE	FALSE	FALSE	40 CFR 61 Subpart L	UNCLASSIFIED	24-Oct-16	23-Nov-16	Matt Case
COKE	R253	Valve	Externally Actuated	Light Liquid	Accessible	FALSE	984	8", 1 ½" & ½" VALVES NORTH PRIM. COOLER RE-SPRAY PUMP OUT. W	09	8	Yes, equipment can be isolated from service	TRUE	FALSE	FALSE	40 CFR 61 Subpart L	UNCLASSIFIED	24-Oct-16	23-Nov-16	ARAN PARKER
COKE	R253A	Valve	Externally Actuated	Light Liquid	Accessible	FALSE	985	1 ½" VALVES NORTH PRIM. COOLER RE-SPRAY PUMP OUT. W/5FL, 11	09	1.5	Yes, equipment can be isolated from service	TRUE	FALSE	FALSE	40 CFR 61 Subpart L	UNCLASSIFIED	24-Oct-16	23-Nov-16	ARAN PARKER
COKE	R253B	Valve	Externally Actuated	Light Liquid	Accessible	FALSE	986	½" VALVES NORTH PRIM. COOLER RE-SPRAY PUMP OUT. W/5FL, 11WC	09	0.5	Yes, equipment can be isolated from service	TRUE	FALSE	FALSE	40 CFR 61 Subpart L	UNCLASSIFIED	24-Oct-16	23-Nov-16	ARAN PARKER
COKE	R254	Valve	Externally Actuated	Light Liquid	Accessible	FALSE	989	(10) ¾" LEVEL CHECK VALVES NORTH PRIMARY COOLER W/10WC & 70S	07	0.8	Yes, equipment can be isolated from service	TRUE	FALSE	FALSE	40 CFR 61 Subpart L	UNCLASSIFIED	24-Oct-16	23-Nov-16	ARAN PARKER
COKE	R254A	Valve	Externally Actuated	Light Liquid	Accessible	FALSE	990	¾" LEVEL CHECK VALVES NORTH PRIMARY COOLER W/10WC & 70SC	07	0.8	Yes, equipment can be isolated from service	TRUE	FALSE	FALSE	40 CFR 61 Subpart L	UNCLASSIFIED	24-Oct-16	23-Nov-16	ARAN PARKER
COKE	R254B	Valve	Externally Actuated	Light Liquid	Accessible	FALSE	991	¾" LEVEL CHECK VALVES NORTH PRIMARY COOLER W/10WC & 70SC	07	0.8	Yes, equipment can be isolated from service	TRUE	FALSE	FALSE	40 CFR 61 Subpart L	UNCLASSIFIED	24-Oct-16	23-Nov-16	ARAN PARKER
COKE	R254C	Valve	Externally Actuated	Light Liquid	Accessible	FALSE	993	¾" LEVEL CHECK VALVES NORTH PRIMARY COOLER W/10WC & 70SC	07	0.8	Yes, equipment can be isolated from service	TRUE	FALSE	FALSE	40 CFR 61 Subpart L	UNCLASSIFIED	24-Oct-16	23-Nov-16	ARAN PARKER
COKE	R254D	Valve	Externally Actuated	Light Liquid	Accessible	FALSE	994	¾" LEVEL CHECK VALVES NORTH PRIMARY COOLER W/10WC & 70SC	07	0.8	Yes, equipment can be isolated from service	TRUE	FALSE	FALSE	40 CFR 61 Subpart L	UNCLASSIFIED	24-Oct-16	23-Nov-16	ARAN PARKER
COKE	R254E	Valve	Externally Actuated	Light Liquid	Accessible	FALSE	995	¾" LEVEL CHECK VALVES NORTH PRIMARY COOLER W/10WC & 70SC	07	0.8	Yes, equipment can be isolated from service	TRUE	FALSE	FALSE	40 CFR 61 Subpart L	UNCLASSIFIED	24-Oct-16	23-Nov-16	ARAN PARKER
COKE	R254F	Valve	Externally Actuated	Light Liquid	Accessible	FALSE	997	¾" LEVEL CHECK VALVES NORTH PRIMARY COOLER W/10WC & 70SC	07	0.8	Yes, equipment can be isolated from service	TRUE	FALSE	FALSE	40 CFR 61 Subpart L	UNCLASSIFIED	24-Oct-16	23-Nov-16	ARAN PARKER
COKE	R254G	Valve	Externally Actuated	Light Liquid	Accessible	FALSE	998	¾" LEVEL CHECK VALVES NORTH PRIMARY COOLER W/10WC & 70SC	07	0.8	Yes, equipment can be isolated from service	TRUE	FALSE	FALSE	40 CFR 61 Subpart L	UNCLASSIFIED	24-Oct-16	23-Nov-16	ARAN PARKER
COKE	R254H	Valve	Externally Actuated	Light Liquid	Accessible	FALSE	999	¾" LEVEL CHECK VALVES NORTH PRIMARY COOLER W/10WC & 70SC	07	0.8	Yes, equipment can be isolated from service	TRUE	FALSE	FALSE	40 CFR 61 Subpart L	UNCLASSIFIED	24-Oct-16	23-Nov-16	ARAN PARKER
COKE	R254I	Valve	Externally Actuated	Light Liquid	Accessible	FALSE	1000	¾" LEVEL CHECK VALVES NORTH PRIMARY COOLER W/10WC & 70SC	07	0.8	Yes, equipment can be isolated from service	TRUE	FALSE	FALSE	40 CFR 61 Subpart L	UNCLASSIFIED	24-Oct-16	23-Nov-16	ARAN PARKER
COKE	R255	Flange	Standard Service	Light Liquid	Accessible	FALSE	983	MANHOLE NORTH PRIMARY COOLER BOTTOM W/1FL & 2WC	05	36	Yes, equipment can be isolated from service	TRUE	FALSE	FALSE	40 CFR 61 Subpart L	UNCLASSIFIED	24-Oct-16	23-Nov-16	ARAN PARKER
COKE	R256	Flange	Standard Service	Light Liquid	Accessible	FALSE	982	MANHOLE NORTH PRIMARY COOLER BOTTOM W/1FL & 2WC	07	36	Yes, equipment can be isolated from service	TRUE	FALSE	FALSE	40 CFR 61 Subpart L	UNCLASSIFIED	24-Oct-16	23-Nov-16	ARAN PARKER
COKE	R257	Valve	Externally Actuated	Light Liquid	Accessible	FALSE	981	6" VALVE NORTH PRIMARY COOLER BOTTOM W/ 2FL & 2WC	07	6	Yes, equipment can be isolated from service	TRUE	FALSE	FALSE	40 CFR 61 Subpart L	UNCLASSIFIED	24-Oct-16	23-Nov-16	ARAN PARKER
COKE	R258	Flange	Standard Service	Light Liquid	Accessible	FALSE	980	MANHOLE SOUTH PRIMARY COOLER BOTTOM W/1FL & 2WC	06	36	Yes, equipment can be isolated from service	TRUE	FALSE	FALSE	40 CFR 61 Subpart L	UNCLASSIFIED	24-Oct-16	23-Nov-16	ARAN PARKER
COKE	R259	Flange	Standard Service	Light Liquid	Accessible	FALSE	979	MANHOLE SOUTH PRIMARY COOLER BOTTOM W/1FL & 2WC	05	36	Yes, equipment can be isolated from service	TRUE	FALSE	FALSE	40 CFR 61 Subpart L	UNCLASSIFIED	24-Oct-16	23-Nov-16	ARAN PARKER
COKE	R26	Valve	Externally Actuated	Light Liquid	Accessible	FALSE	281	6" VALVE PROCESS WATER COOLING TOWER OUTLET W/ 4FL, 20WC &	1P5	6	Yes, equipment can be isolated from service	TRUE	FALSE	FALSE	40 CFR 61 Subpart L	UNCLASSIFIED	24-Oct-16	23-Nov-16	ARAN PARKER
COKE	R260	Valve	Externally Actuated	Light Liquid	Accessible	FALSE	967	8", 1 ½" & ½" VALVES SOUTH PRIMARY COOLER RE-SPRAY PUMP OUT.	06	8	Yes, equipment can be isolated from service	TRUE	FALSE	FALSE	40 CFR 61 Subpart L	UNCLASSIFIED	24-Oct-16	23-Nov-16	ARAN PARKER
COKE	R260A	Valve	Externally Actuated	Light Liquid	Accessible	FALSE	358	1 ½" VALVES SOUTH PRIMARY COOLER RE-SPRAY PUMP OUT. W/5FL, 6	06	1.5	Yes, equipment can be isolated from service	TRUE	FALSE	FALSE	40 CFR 61 Subpart L	UNCLASSIFIED	24-Oct-16	23-Nov-16	ARAN PARKER
COKE	R260B	Valve	Externally Actuated	Light Liquid	Accessible	FALSE	968	½" VALVES SOUTH PRIMARY COOLER RE-SPRAY PUMP OUT. W/5FL, 6WC	06	0.5	Yes, equipment can be isolated from service	TRUE	FALSE	FALSE	40 CFR 61 Subpart L	UNCLASSIFIED	24-Oct-16	23-Nov-16	ARAN PARKER
COKE	R261	Valve	Externally Actuated	Light Liquid	Accessible	FALSE	354	10" & 1 ½" VALVES SOUTH PRIMARY COOLER RE-SPRAY PUMP INLET W	03	10	Yes, equipment can be isolated from service	TRUE	FALSE	FALSE	40 CFR 61 Subpart L	UNCLASSIFIED	24-Oct-16	23-Nov-16	ARAN PARKER
COKE	R261A	Valve	Externally Actuated	Light Liquid	Accessible	FALSE	355	1 ½" VALVES SOUTH PRIMARY COOLER RE-SPRAY PUMP INLET W/ 3FL,	03	1.5	Yes, equipment can be isolated from service	TRUE	FALSE	FALSE	40 CFR 61 Subpart L	UNCLASSIFIED	24-Oct-16	23-Nov-16	ARAN PARKER
COKE	R262	Valve	Externally Actuated	Light Liquid	Accessible	FALSE	969	(10) ¾" LEVEL CHECK VALVES SOUTH PRIMARY COOLER W/10WC & 60S	05	0.8	Yes, equipment can be isolated from service	TRUE	FALSE	FALSE	40 CFR 61 Subpart L	UNCLASSIFIED	24-Oct-16	23-Nov-16	ARAN PARKER
COKE	R262A	Valve	Externally Actuated	Light Liquid	Accessible	FALSE	970	¾" LEVEL CHECK VALVES SOUTH PRIMARY COOLER W/10WC & 60SC	05	0.8	Yes, equipment can be isolated from service	TRUE	FALSE	FALSE	40 CFR 61 Subpart L	UNCLASSIFIED	24-Oct-16	23-Nov-16	ARAN PARKER
COKE	R262B	Valve	Externally Actuated	Light Liquid	Accessible	FALSE	971	¾" LEVEL CHECK VALVES SOUTH PRIMARY COOLER W/10WC & 60SC	05	0.8	Yes, equipment can be isolated from service	TRUE	FALSE	FALSE	40 CFR 61 Subpart L	UNCLASSIFIED	24-Oct-16	23-Nov-16	ARAN PARKER
COKE	R262C	Valve	Externally Actuated	Light Liquid	Accessible	FALSE	972	¾" LEVEL CHECK VALVES SOUTH PRIMARY COOLER W/10WC & 60SC	05	0.8	Yes, equipment can be isolated from service	TRUE	FALSE	FALSE	40 CFR 61 Subpart L	UNCLASSIFIED	24-Oct-16	23-Nov-16	ARAN PARKER
COKE	R262D	Valve	Externally Actuated	Light Liquid	Accessible	FALSE	973	¾" LEVEL CHECK VALVES SOUTH PRIMARY COOLER W/10WC & 60SC	05	0.8	Yes, equipment can be isolated from service	TRUE	FALSE	FALSE	40 CFR 61 Subpart L	UNCLASSIFIED	24-Oct-16	23-Nov-16	ARAN PARKER
COKE	R262E	Valve	Externally Actuated	Light Liquid	Accessible	FALSE	974	¾" LEVEL CHECK VALVES SOUTH PRIMARY COOLER W/10WC & 60SC	05	0.8	Yes, equipment can be isolated from service	TRUE	FALSE	FALSE	40 CFR 61 Subpart L	UNCLASSIFIED	24-Oct-16	23-Nov-16	ARAN PARKER
COKE	R262F	Valve	Externally Actuated	Light Liquid	Accessible	FALSE	975	¾" LEVEL CHECK VALVES SOUTH PRIMARY COOLER W/10WC & 60SC	05	0.8	Yes, equipment can be isolated from service	TRUE	FALSE	FALSE	40 CFR 61 Subpart L	UNCLASSIFIED	24-Oct-16	23-Nov-16	ARAN PARKER
COKE	R262G	Valve	Externally Actuated	Light Liquid	Accessible	FALSE	976	¾" LEVEL CHECK VALVES SOUTH PRIMARY COOLER W/10WC & 60SC	05	0.8	Yes, equipment can be isolated from service	TRUE	FALSE	FALSE	40 CFR 61 Subpart L	UNCLASSIFIED	24-Oct-16	23-Nov-16	ARAN PARKER
COKE	R262H	Valve	Externally Actuated	Light Liquid	Accessible	FALSE	977	¾" LEVEL CHECK VALVES SOUTH PRIMARY COOLER W/10WC & 60SC	05	0.8	Yes, equipment can be isolated from service	TRUE	FALSE	FALSE	40 CFR 61 Subpart L	UNCLASSIFIED	24-Oct-16	23-Nov-16	ARAN PARKER
COKE	R262I	Valve	Externally Actuated	Light Liquid	Accessible	FALSE	978	¾" LEVEL CHECK VALVES SOUTH PRIMARY COOLER W/10WC & 60SC	05	0.8	Yes, equipment can be isolated from service	TRUE	FALSE	FALSE	40 CFR 61 Subpart L	UNCLASSIFIED	24-Oct-16	23-Nov-16	ARAN PARKER
COKE	R263	Valve	Externally Actuated	Light Liquid	Accessible	FALSE	966	6" VALVE SOUTH PRIMARY COOLER BOTTOM W/2FL & 2WC	06	6	Yes, equipment can be isolated from service	TRUE	FALSE	FALSE	40 CFR 61 Subpart L	UNCLASSIFIED	24-Oct-16	23-Nov-16	ARAN PARKER
COKE	R264	Valve	Externally Actuated	Light Liquid	Accessible	FALSE	950	4" VALVE NORTH PRIMARY COOLER BOTTOM W/3FL & 8WC	08	4	Yes, equipment can be isolated from service	TRUE	FALSE	FALSE	40 CFR 61 Subpart L	UNCLASSIFIED	24-Oct-16	23-Nov-16	ARAN PARKER
COKE	R265	Valve	Externally Actuated	Light Liquid	Accessible	FALSE	964	4" VALVE SOUTH PRIMARY COOLER BOTTOM W/3FL & 8WC	05	4	Yes, equipment can be isolated from service	TRUE	FALSE	FALSE	40 CFR 61 Subpart L	UNCLASSIFIED	24-Oct-16	23-Nov-16	ARAN PARKER
COKE	R266	Flange	Standard Service	Light Liquid	Difficult to Monitor	FALSE	899	LIQUOR LINE FROM PRIMARY COOLERS TO SPIRAL COOLERS W/7WC	020	2	Yes, equipment can be isolated from service	TRUE	FALSE	FALSE	40 CFR 61 Subpart L	UNCLASSIFIED	24-Oct-16	23-Nov-16	ARAN PARKER
COKE	R267	Valve	Externally Actuated	Light Liquid	Difficult to Monitor	FALSE	900	6" VALVE LIQUOR LINE TO SPIRAL COOLERS @ PRIMARY COOLERS W	020	6	Yes, equipment can be isolated from service	TRUE	FALSE	FALSE	40 CFR 61 Subpart L	UNCLASSIFIED	24-Oct-16	23-Nov-16	ARAN PARKER
COKE	R268	Valve	Externally Actuated	Light Liquid	Difficult to Monitor	FALSE	901	6" VALVE LIQUOR LINE TO SPIRAL COOLERS @ PRIMARY COOLERS W/3	020	6	Yes, equipment can be isolated from service	TRUE	FALSE	FALSE	40 CFR 61 Subpart L	UNCLASSIFIED	24-Oct-16	23-Nov-16	ARAN PARKER
COKE	R269	Valve	Externally Actuated	Light Liquid	Difficult to Monitor	FALSE	902	6" VALVE LIQUOR LINE FROM SPIRAL COOLERS @ PRIMARY COOLERS W	025	6	Yes, equipment can be isolated from service	TRUE	FALSE	FALSE	40 CFR 61 Subpart L	UNCLASSIFIED	24-Oct-16	23-Nov-16	ARAN PARKER
COKE	R27	Valve	Externally Actuated	Light Liquid	Accessible	FALSE	280	6" VALVE PROCESS WATER COOLING TOWER INLET W/ 4FL, 20WC & 2S	1P5	6	Yes, equipment can be isolated from service	TRUE	FALSE	FALSE	40 CFR 61 Subpart L	UNCLASSIFIED	24-Oct-16	23-Nov-16	ARAN PARKER
COKE	R270	Valve	Externally Actuated	Light Liquid	Difficult to Monitor	FALSE	903	6" VALVE LIQUOR LINE TO SPIRAL COOLERS @ PRIMARY COOLERS W/2	020	6	Yes, equipment can be isolated from service	TRUE	FALSE	FALSE	40 CFR 61 Subpart L	UNCLASSIFIED	24-Oct-16	23-Nov-16	ARAN PARKER
COKE	R271	Valve	Externally Actuated	Light Liquid	Difficult to Monitor	FALSE	904	6" VALVE LIQUOR LINE FROM SPIRAL COOLERS @ PRIMARY COOLERS W	025	6	Yes, equipment can be isolated from service	TRUE	FALSE	FALSE	40 CFR 61 Subpart L	UNCLASSIFIED	24-Oct-16	23-Nov-16	ARAN PARKER
COKE	R272	Valve	Externally Actuated	Light Liquid	Difficult to Monitor	FALSE	905	6" VALVE LIQUOR LINE TO SPIRAL COOLERS @ PRIMARY COOLERS W/2	025	6	Yes, equipment can be isolated from service	TRUE	FALSE	FALSE	40 CFR 61 Subpart L	UNCLASSIFIED	24-Oct-16	23-Nov-16	ARAN PARKER
COKE	R273	Valve	Externally Actuated	Light Liquid	Difficult to Monitor	FALSE	906	6" VALVE LIQUOR LINE FROM SPIRAL COOLERS @ PRIMARY COOLERS W	025	6	Yes, equipment can be isolated from service	TRUE	FALSE	FALSE	40 CFR 61 Subpart L	UNCLASSIFIED	24-Oct-16	23-Nov-16	ARAN PARKER
COKE	R274	Valve	Externally Actuated	Light Liquid	Difficult to Monitor	FALSE	907	6" VALVE LIQUOR LINE TO SPIRAL COOLERS @ PRIMARY COOLERS W/2	025	6	Yes, equipment can be isolated from service	TRUE	FALSE	FALSE	40 CFR 61 Subpart L	UNCLASSIFIED	24-Oct-16	23-Nov-16	ARAN PARKER
COKE	R275	Valve	Externally Actuated	Light Liquid	Difficult to Monitor	FALSE	908	6" VALVE LIQUOR LINE TO SPIRAL COOLERS @ PRIMARY COOLERS W/2	025	6	Yes, equipment can be isolated from service	TRUE	FALSE	FALSE	40 CFR 61 Subpart L	UNCLASSIFIED	24-Oct-16	23-Nov-16	ARAN PARKER
COKE	R276	Flange	Standard Service	Light Liquid	Accessible	FALSE	504	4" COG CONDENSATE TO FLUSHING LIQUOR RETURN LINE @ LITTLE HO	112	16	Yes, equipment can be isolated from service	TRUE	FALSE	FALSE	40 CFR 61 Subpart L	UNCLASSIFIED	24-Oct-16	23-Nov-16	ARAN PARKER
COKE	R277	Valve	Externally Actuated	Light Liquid	Accessible	FALSE	505	16" FLUSHING LIQUOR LINE TO BECKERS BATTERY	112	16	Yes, equipment can be isolated from service	TRUE	FALSE	FALSE	40 CFR 61 Subpart L	UNCLASSIFIED	24-Oct-16	23-Nov-16	ARAN PARKER
COKE	R278	Valve	Externally Actuated	Light Liquid	Accessible	FALSE	148	8" VALVE LIQUOR LINE @ PRIMARY COOLERS 4TH LEVEL W/3FL & 10W	25	8	Yes, equipment can be isolated from service	TRUE	FALSE	FALSE	40 CFR 61 Subpart L	UNCLASSIFIED	24-Oct-16	23-Nov-16	Matt Case
COKE	R279	Valve	Externally Actuated	Light Liquid	Accessible	FALSE	147	8" VALVE LIQUOR LINE NORTH PRIMARY COOLER 4TH LEVEL W/2FL &	2-3	8	Yes, equipment can be isolated from service	TRUE	FALSE	FALSE	40 CFR 61 Subpart L	UNCLASSIFIED	24-Oct-16	23-Nov-16	Matt Case
COKE	R28	Valve	Externally Actuated	Light Liquid	Accessible	FALSE	278	12" VALVE PROCESS WATER COOLING TOWER OUTLET W/2FL & 7WC	1P8	12	Yes, equipment can be isolated from service	TRUE	FALSE	FALSE	40 CFR 61 Subpart L	UNCLASSIFIED	24-Oct-16	23-Nov-16	ARAN PARKER
COKE	R280	Valve	Externally Actuated	Light Liquid	Accessible	FALSE	150	8" VALVE LIQUOR LINE @ PRIMARY COOLERS 4TH LEVEL W/3FL & 8WC	25	8	Yes, equipment can be isolated from service	TRUE	FALSE	FALSE	40 CFR 61 Subpart L	UNCLASSIFIED	24-Oct-16	23-Nov-16	ARAN PARKER
COKE	R281	Valve	Externally Actuated	Light Liquid	Accessible	FALSE	149	8" VALVE LIQUOR LINE SOUTH PRIMARY COOLER 4TH LEVEL W/2FL &	25	8	Yes, equipment can be isolated from service	TRUE	FALSE	FALSE	40 CFR 61 Subpart L	UNCLASSIFIED	24-Oct-16	23-Nov-16	Matt Case

UNIT_CODE	TAG_ NUMBER	EQUITYPE_DESC	CONFIG_DESC	SERVICE_DESC	ACCESS_DESC	CLOSED_VENT _SYSTEM	ROUTE	LOCATION	LEVEL	SIZE	IFSTYPE_DESC	ATTEMPT_A LLOWED	UNDER_300_H OURS_SERVIC E	POTENTIAL_ OPEN_END	GROUP_DESC	PRODUCT_DESC	DATE_ADDED	DATE_IN_SERVICE	TECH_DESC
COKE	R282	Valve	Externally Actuated	Light Liquid	Accessible	FALSE	162	10" VALVE LIQUOR LINE INLET NORTH PRIMARY COOLER 5TH LEVEL W	37	10	Yes, equipment can be isolated from service	TRUE	FALSE	FALSE	40 CFR 61 Subpart L	UNCLASSIFIED	24-Oct-16	23-Nov-16	Matt Case
COKE	R283	Valve	Externally Actuated	Light Liquid	Accessible	FALSE	163	10" VALVE LIQUOR LINE INLET SOUTH PRIMARY COOLER	35	10	Yes, equipment can be isolated from service	TRUE	FALSE	FALSE	40 CFR 61 Subpart L	UNCLASSIFIED	24-Oct-16	23-Nov-16	Matt Case
COKE	R284	Valve	Externally Actuated	Light Liquid	Difficult to Monitor	FALSE	910	6" VALVE LIQUOR LINE TO SPIRAL COOLERS @ PRIMARY COOLERS W/2	035	6	Yes, equipment can be isolated from service	TRUE	FALSE	FALSE	40 CFR 61 Subpart L	UNCLASSIFIED	24-Oct-16	23-Nov-16	ARAN PARKER
COKE	R285	Valve	Externally Actuated	Light Liquid	Difficult to Monitor	FALSE	909	6" VALVE LIQUOR LINE TO SPIRAL COOLERS @ PRIMARY COOLERS W/3	035	6	Yes, equipment can be isolated from service	TRUE	FALSE	FALSE	40 CFR 61 Subpart L	UNCLASSIFIED	24-Oct-16	23-Nov-16	ARAN PARKER
COKE	R286	Valve	Externally Actuated	Light Liquid	Accessible	FALSE	864	4" COG CONDENSATE W/2" & ½" VALVES @ EAST WASH OIL SCRUBBER	05	4	Yes, equipment can be isolated from service	TRUE	FALSE	FALSE	40 CFR 61 Subpart L	UNCLASSIFIED	24-Oct-16	23-Nov-16	ARAN PARKER
COKE	R286A	Valve	Externally Actuated	Light Liquid	Accessible	FALSE	865	2"VALVES @ EAST WASH OIL SCRUBBER PUMP	04	2	Yes, equipment can be isolated from service	TRUE	FALSE	FALSE	40 CFR 61 Subpart L	UNCLASSIFIED	24-Oct-16	23-Nov-16	ARAN PARKER
COKE	R286B	Valve	Externally Actuated	Light Liquid	Accessible	FALSE	866	½" VALVES @ EAST WASH OIL SCRUBBER PUMP	04	0.5	Yes, equipment can be isolated from service	TRUE	FALSE	FALSE	40 CFR 61 Subpart L	UNCLASSIFIED	24-Oct-16	23-Nov-16	ARAN PARKER
COKE	R287	Valve	Externally Actuated	Light Liquid	Accessible	FALSE	827	6" VALVE 6" LINE 2" VALVE BETWEEN WASH OIL SCRUBBERS 2ND LEV	1P3	6	Yes, equipment can be isolated from service	TRUE	FALSE	FALSE	40 CFR 61 Subpart L	UNCLASSIFIED	24-Oct-16	23-Nov-16	Matt Case
COKE	R287A	Valve	Externally Actuated	Light Liquid	Accessible	FALSE	828	6" LINE 2" VALVE BETWEEN WASH OIL SCRUBBERS 2ND LEVEL	1P2	2	Yes, equipment can be isolated from service	TRUE	FALSE	FALSE	40 CFR 61 Subpart L	UNCLASSIFIED	24-Oct-16	23-Nov-16	ARAN PARKER
COKE	R288	Valve	Externally Actuated	Light Liquid	Accessible	FALSE	834	6" VALVE 6" LINE 2" VALVE BETWEEN WASH OIL SCRUBBERS 2ND LEV	1P3	6	Yes, equipment can be isolated from service	TRUE	FALSE	FALSE	40 CFR 61 Subpart L	UNCLASSIFIED	24-Oct-16	23-Nov-16	ARAN PARKER
COKE	R288A	Valve	Externally Actuated	Light Liquid	Accessible	FALSE	835	6" LINE 2" VALVE BETWEEN WASH OIL SCRUBBERS 2ND LEVEL	1P2	2	Yes, equipment can be isolated from service	TRUE	FALSE	FALSE	40 CFR 61 Subpart L	UNCLASSIFIED	24-Oct-16	23-Nov-16	ARAN PARKER
COKE	R289	Valve	Externally Actuated	Light Liquid	Accessible	FALSE	140	4" VALVE LIQUOR (PRIMARY COOLER NORTH) 3RD LEVEL	1P10	4	Yes, equipment can be isolated from service	TRUE	FALSE	FALSE	40 CFR 61 Subpart L	UNCLASSIFIED	24-Oct-16	23-Nov-16	ARAN PARKER
COKE	R29	Valve	Externally Actuated	Light Liquid	Accessible	FALSE	279	6" VALVE PROCESS WATER COOLING TOWER INLET W/1FL & 6WC	1P8	6	Yes, equipment can be isolated from service	TRUE	FALSE	FALSE	40 CFR 61 Subpart L	UNCLASSIFIED	24-Oct-16	23-Nov-16	ARAN PARKER
COKE	R290	Valve	Externally Actuated	Light Liquid	Accessible	FALSE	141	4" VALVE LIQUOR (PRIMARY COOLER SOUTH) 3RD LEVEL	1P10	4	Yes, equipment can be isolated from service	TRUE	FALSE	FALSE	40 CFR 61 Subpart L	UNCLASSIFIED	24-Oct-16	23-Nov-16	ARAN PARKER
COKE	R291	Valve	Externally Actuated	Light Liquid	Accessible	FALSE	1093	4" & ½" VALVES @ LITTLE HOLDER OVERFLOW WATER W/4FL & 11WC	02	4	Yes, equipment can be isolated from service	TRUE	FALSE	FALSE	40 CFR 61 Subpart L	UNCLASSIFIED	24-Oct-16	23-Nov-16	ARAN PARKER
COKE	R291A	Valve	Externally Actuated	Light Liquid	Accessible	FALSE	1094	½" VALVES @ LITTLE HOLDER OVERFLOW WATER W/4FL & 11WC	02	0.5	Yes, equipment can be isolated from service	TRUE	FALSE	FALSE	40 CFR 61 Subpart L	UNCLASSIFIED	24-Oct-16	23-Nov-16	ARAN PARKER
COKE	R292	Flange	Standard Service	Light Liquid	Accessible	FALSE	1038	LITTLE GAS HOLDER CONTACT WATER TO PRIMARY COOLER SUMP W/5FL	05	2	Yes, equipment can be isolated from service	TRUE	FALSE	FALSE	40 CFR 61 Subpart L	UNCLASSIFIED	24-Oct-16	23-Nov-16	ARAN PARKER
COKE	R293	Connector	Standard Service	Light Liquid	Accessible	FALSE	1097	ENGINE ROOM BASEMENT SUMP @ PRIMARY COOLER SUMP W/1FL & 9SC	03	3	Yes, equipment can be isolated from service	TRUE	FALSE	FALSE	40 CFR 61 Subpart L	UNCLASSIFIED	24-Oct-16	23-Nov-16	ARAN PARKER
COKE	R294	Valve	Externally Actuated	Light Liquid	Accessible	FALSE	1079	6", (3) ½" & 6" CHECK VALVES EAST PRIM. COOL. PUMP OUT. W/4F	04	6	Yes, equipment can be isolated from service	TRUE	FALSE	FALSE	40 CFR 61 Subpart L	UNCLASSIFIED	24-Oct-16	23-Nov-16	ARAN PARKER
COKE	R294A	Valve	Externally Actuated	Light Liquid	Accessible	FALSE	1080	½" CHECK VALVES EAST PRIM. COOL. PUMP OUT. W/4FL, 9WC & 24S	03	0.5	Yes, equipment can be isolated from service	TRUE	FALSE	FALSE	40 CFR 61 Subpart L	UNCLASSIFIED	24-Oct-16	23-Nov-16	ARAN PARKER
COKE	R294B	Valve	Externally Actuated	Light Liquid	Accessible	FALSE	1081	½" CHECK VALVES EAST PRIM. COOL. PUMP OUT. W/4FL, 9WC & 24S	03	0.5	Yes, equipment can be isolated from service	TRUE	FALSE	FALSE	40 CFR 61 Subpart L	UNCLASSIFIED	24-Oct-16	23-Nov-16	ARAN PARKER
COKE	R294C	Valve	Externally Actuated	Light Liquid	Accessible	FALSE	1082	½" CHECK VALVES EAST PRIM. COOL. PUMP OUT. W/4FL, 9WC & 24	03	0.5	Yes, equipment can be isolated from service	TRUE	FALSE	FALSE	40 CFR 61 Subpart L	UNCLASSIFIED	24-Oct-16	23-Nov-16	ARAN PARKER
COKE	R294D	Valve	Externally Actuated	Light Liquid	Accessible	FALSE	1083	6" CHECK VALVES EAST PRIM. COOL. PUMP OUT. W/4FL, 9WC & 24S	04	6	Yes, equipment can be isolated from service	TRUE	FALSE	FALSE	40 CFR 61 Subpart L	UNCLASSIFIED	24-Oct-16	23-Nov-16	ARAN PARKER
COKE	R295	Valve	Externally Actuated	Light Liquid	Accessible	FALSE	1046	AIR DIAPHRAGM SEAL PUMP AT LITTLE HOLDER (3) 2" & 1 ½ "VALVE	00	2	Yes, equipment can be isolated from service	TRUE	FALSE	FALSE	40 CFR 61 Subpart L	UNCLASSIFIED	24-Oct-16	23-Nov-16	Matt Case
COKE	R295A	Valve	Externally Actuated	Light Liquid	Accessible	FALSE	1047	AIR DIAPHRAGM SEAL PUMP AT LITTLE HOLDER 2" VALVES	00	2	Yes, equipment can be isolated from service	TRUE	FALSE	FALSE	40 CFR 61 Subpart L	UNCLASSIFIED	24-Oct-16	23-Nov-16	ARAN PARKER
COKE	R295B	Valve	Externally Actuated	Light Liquid	Accessible	FALSE	1048	AIR DIAPHRAGM SEAL PUMP AT LITTLE HOLDER 2" VALVES	00	2	Yes, equipment can be isolated from service	TRUE	FALSE	FALSE	40 CFR 61 Subpart L	UNCLASSIFIED	24-Oct-16	23-Nov-16	ARAN PARKER
COKE	R295C	Valve	Externally Actuated	Light Liquid	Accessible	FALSE	1049	AIR DIAPHRAGM SEAL PUMP AT LITTLE HOLDER 2" VALVES	00	2	Yes, equipment can be isolated from service	TRUE	FALSE	FALSE	40 CFR 61 Subpart L	UNCLASSIFIED	24-Oct-16	23-Nov-16	ARAN PARKER
COKE	R295D	Valve	Externally Actuated	Light Liquid	Accessible	FALSE	1050	AIR DIAPHRAGM SEAL PUMP AT LITTLE HOLDER 1 ½ "VALVES	00	1.5	Yes, equipment can be isolated from service	TRUE	FALSE	FALSE	40 CFR 61 Subpart L	UNCLASSIFIED	24-Oct-16	23-Nov-16	ARAN PARKER
COKE	R296	Valve	Externally Actuated	Light Liquid	Accessible	FALSE	157	PRIMARY COOLER (2) 2" VALVES, (2)-1 ½ VALVES & ½ "VALVE	35	2	Yes, equipment can be isolated from service	TRUE	FALSE	FALSE	40 CFR 61 Subpart L	UNCLASSIFIED	24-Oct-16	23-Nov-16	ARAN PARKER
COKE	R296A	Valve	Externally Actuated	Light Liquid	Accessible	FALSE	158	PRIMARY COOLER 2" VALVES	35	2	Yes, equipment can be isolated from service	TRUE	FALSE	FALSE	40 CFR 61 Subpart L	UNCLASSIFIED	24-Oct-16	23-Nov-16	ARAN PARKER
COKE	R296B	Valve	Externally Actuated	Light Liquid	Accessible	FALSE	159	PRIMARY COOLER 1 ½ VALVES	35	1.5	Yes, equipment can be isolated from service	TRUE	FALSE	FALSE	40 CFR 61 Subpart L	UNCLASSIFIED	24-Oct-16	23-Nov-16	ARAN PARKER
COKE	R296C	Valve	Externally Actuated	Light Liquid	Accessible	FALSE	160	PRIMARY COOLER 1 ½ VALVES	35	1.5	Yes, equipment can be isolated from service	TRUE	FALSE	FALSE	40 CFR 61 Subpart L	UNCLASSIFIED	24-Oct-16	23-Nov-16	ARAN PARKER
COKE	R296D	Valve	Externally Actuated	Light Liquid	Accessible	FALSE	161	PRIMARY COOLER ½ "VALVE	35	0	Yes, equipment can be isolated from service	TRUE	FALSE	FALSE	40 CFR 61 Subpart L	UNCLASSIFIED	24-Oct-16	23-Nov-16	ARAN PARKER
COKE	R297	Valve	Externally Actuated	Light Liquid	Accessible	FALSE	152	PRIMARY COOLER (2) 2" VALVES, (2)-1 ½ VALVES & ½ "VALVE	32	2	Yes, equipment can be isolated from service	TRUE	FALSE	FALSE	40 CFR 61 Subpart L	UNCLASSIFIED	24-Oct-16	23-Nov-16	ARAN PARKER
COKE	R297A	Valve	Externally Actuated	Light Liquid	Accessible	FALSE	153	PRIMARY COOLER 2" VALVES	32	2	Yes, equipment can be isolated from service	TRUE	FALSE	FALSE	40 CFR 61 Subpart L	UNCLASSIFIED	24-Oct-16	23-Nov-16	ARAN PARKER
COKE	R297B	Valve	Externally Actuated	Light Liquid	Accessible	FALSE	154	PRIMARY COOLER 1 ½ VALVES	32	1.5	Yes, equipment can be isolated from service	TRUE	FALSE	FALSE	40 CFR 61 Subpart L	UNCLASSIFIED	24-Oct-16	23-Nov-16	ARAN PARKER
COKE	R297C	Valve	Externally Actuated	Light Liquid	Accessible	FALSE	155	PRIMARY COOLER 1 ½ VALVES	32	1.5	Yes, equipment can be isolated from service	TRUE	FALSE	FALSE	40 CFR 61 Subpart L	UNCLASSIFIED	24-Oct-16	23-Nov-16	ARAN PARKER
COKE	R297D	Valve	Externally Actuated	Light Liquid	Accessible	FALSE	156	PRIMARY COOLER ½ "VALVE	32	0.5	Yes, equipment can be isolated from service	TRUE	FALSE	FALSE	40 CFR 61 Subpart L	UNCLASSIFIED	24-Oct-16	23-Nov-16	ARAN PARKER
COKE	R298	Valve	Externally Actuated	Light Liquid	Accessible	FALSE	164	TOP OF SOUTH PRIMARY COOLER (4) 2" VALVES, (2) 1 ½" VALVES &	41P2	2	Yes, equipment can be isolated from service	TRUE	FALSE	FALSE	40 CFR 61 Subpart L	UNCLASSIFIED	24-Oct-16	23-Nov-16	ARAN PARKER
COKE	R298A	Valve	Externally Actuated	Light Liquid	Accessible	FALSE	165	TOP OF SOUTH PRIMARY COOLER 2" VALVES	41P2	2	Yes, equipment can be isolated from service	TRUE	FALSE	FALSE	40 CFR 61 Subpart L	UNCLASSIFIED	24-Oct-16	23-Nov-16	ARAN PARKER
COKE	R298B	Valve	Externally Actuated	Light Liquid	Accessible	FALSE	166	TOP OF SOUTH PRIMARY COOLER 2" VALVES	41P2	2	Yes, equipment can be isolated from service	TRUE	FALSE	FALSE	40 CFR 61 Subpart L	UNCLASSIFIED	24-Oct-16	23-Nov-16	ARAN PARKER
COKE	R298C	Valve	Externally Actuated	Light Liquid	Accessible	FALSE	167	TOP OF SOUTH PRIMARY COOLER 2" VALVES	41P2	2	Yes, equipment can be isolated from service	TRUE	FALSE	FALSE	40 CFR 61 Subpart L	UNCLASSIFIED	24-Oct-16	23-Nov-16	ARAN PARKER
COKE	R298D	Valve	Externally Actuated	Light Liquid	Accessible	FALSE	168	TOP OF SOUTH PRIMARY COOLER 1 ½" VALVES	41P2	1.5	Yes, equipment can be isolated from service	TRUE	FALSE	FALSE	40 CFR 61 Subpart L	UNCLASSIFIED	24-Oct-16	23-Nov-16	ARAN PARKER
COKE	R298E	Valve	Externally Actuated	Light Liquid	Accessible	FALSE	169	TOP OF SOUTH PRIMARY COOLER 1 ½" VALVES	41P2	1.5	Yes, equipment can be isolated from service	TRUE	FALSE	FALSE	40 CFR 61 Subpart L	UNCLASSIFIED	24-Oct-16	23-Nov-16	ARAN PARKER
COKE	R298F	Valve	Externally Actuated	Light Liquid	Accessible	FALSE	170	TOP OF SOUTH PRIMARY COOLER ½" VALVES	41P2	0.5	Yes, equipment can be isolated from service	TRUE	FALSE	FALSE	40 CFR 61 Subpart L	UNCLASSIFIED	24-Oct-16	23-Nov-16	ARAN PARKER
COKE	R298G	Valve	Externally Actuated	Light Liquid	Accessible	FALSE	171	TOP OF SOUTH PRIMARY COOLER ½" VALVES	41P2	0.5	Yes, equipment can be isolated from service	TRUE	FALSE	FALSE	40 CFR 61 Subpart L	UNCLASSIFIED	24-Oct-16	23-Nov-16	ARAN PARKER
COKE	R299	Valve	Externally Actuated	Light Liquid	Accessible	FALSE	172	TOP OF NORTH PRIMARY COOLER (4) 2" VALVES, (2) 1 ½" VALVES &	41P2	2	Yes, equipment can be isolated from service	TRUE	FALSE	FALSE	40 CFR 61 Subpart L	UNCLASSIFIED	24-Oct-16	23-Nov-16	ARAN PARKER
COKE	R299A	Valve	Externally Actuated	Light Liquid	Accessible	FALSE	173	TOP OF NORTH PRIMARY COOLER 2" VALVES	41P2	2	Yes, equipment can be isolated from service	TRUE	FALSE	FALSE	40 CFR 61 Subpart L	UNCLASSIFIED	24-Oct-16	23-Nov-16	ARAN PARKER
COKE	R299B	Valve	Externally Actuated	Light Liquid	Accessible	FALSE	174	TOP OF NORTH PRIMARY COOLER 2" VALVES	41P2	2	Yes, equipment can be isolated from service	TRUE	FALSE	FALSE	40 CFR 61 Subpart L	UNCLASSIFIED	24-Oct-16	23-Nov-16	ARAN PARKER
COKE	R299C	Valve	Externally Actuated	Light Liquid	Accessible	FALSE	175	TOP OF NORTH PRIMARY COOLER 2" VALVES	41P2	2	Yes, equipment can be isolated from service	TRUE	FALSE	FALSE	40 CFR 61 Subpart L	UNCLASSIFIED	24-Oct-16	23-Nov-16	ARAN PARKER
COKE	R299D	Valve	Externally Actuated	Light Liquid	Accessible	FALSE	176	TOP OF NORTH PRIMARY COOLER 1 ½" VALVES	41P2	1.5	Yes, equipment can be isolated from service	TRUE	FALSE	FALSE	40 CFR 61 Subpart L	UNCLASSIFIED	24-Oct-16	23-Nov-16	ARAN PARKER
COKE	R299E	Valve	Externally Actuated	Light Liquid	Accessible	FALSE	177	TOP OF NORTH PRIMARY COOLER 1 ½" VALVES	41P2	1.5	Yes, equipment can be isolated from service	TRUE	FALSE	FALSE	40 CFR 61 Subpart L	UNCLASSIFIED	24-Oct-16	23-Nov-16	ARAN PARKER
COKE	R299F	Valve	Externally Actuated	Light Liquid	Accessible	FALSE	178	TOP OF NORTH PRIMARY COOLER ½" VALVES	41P2	0.5	Yes, equipment can be isolated from service	TRUE	FALSE	FALSE	40 CFR 61 Subpart L	UNCLASSIFIED	24-Oct-16	23-Nov-16	ARAN PARKER
COKE	R299G	Valve	Externally Actuated	Light Liquid	Accessible	FALSE	179	TOP OF NORTH PRIMARY COOLER ½" VALVES	41P2	0.5	Yes, equipment can be isolated from service	TRUE	FALSE	FALSE	40 CFR 61 Subpart L	UNCLASSIFIED	24-Oct-16	23-Nov-16	ARAN PARKER
COKE	R3	Valve	Externally Actuated	Light Liquid	Accessible	FALSE	751	4"VALVE BOTTOM OF PURIFIER W/2FL & 1WC	03	4	Yes, equipment can be isolated from service	TRUE	FALSE	FALSE	40 CFR 61 Subpart L	UNCLASSIFIED	24-Oct-16	23-Nov-16	ARAN PARKER
COKE	R30	Valve	Externally Actuated	Light Liquid	Accessible	FALSE	277	12" VALVE PROCESS WATER COOLING TOWER W/2FL & 8WC	1P8	12	Yes, equipment can be isolated from service	TRUE	FALSE	FALSE	40 CFR 61 Subpart L	UNCLASSIFIED	24-Oct-16	23-Nov-16	ARAN PARKER
COKE	R300	Flange	Standard Service	Light Liquid	Accessible	FALSE	1033	3 VALVE PRIMARY COOLER SUCTION POT DRAIN	03	8	Yes, equipment can be isolated from service	TRUE	FALSE	FALSE	40 CFR 61 Subpart L	UNCLASSIFIED	24-Oct-16	23-Nov-16	ARAN PARKER
COKE	R301	Valve	Externally Actuated	Light Liquid	Accessible	FALSE	1034	3" VALVE PRIMARY COOLER SUCTION POT	03	3	Yes, equipment can be isolated from service	TRUE	FALSE	FALSE	40 CFR 61 Subpart L	UNCLASSIFIED	24-Oct-16	23-Nov-16	ARAN PARKER
COKE	R302	Valve	Externally Actuated	Light Liquid	Accessible	FALSE	1036	3" VALVE PRIMARY COOLER SUCTION POT DRAIN	03	3	Yes, equipment can be isolated from service	TRUE	FALSE	FALSE	40 CFR 61 Subpart L	UNCLASSIFIED	24-Oct-16	23-Nov-16	ARAN PARKER
COKE	R303	Valve	Externally Actuated	Light Liquid	Accessible	FALSE	1037	3" VALVE PRIMARY COOLER SUCTION POT DRAIN	03	3	Yes, equipment can be isolated from service	TRUE	FALSE	FALSE	40 CFR 61 Subpart L	UNCLASSIFIED	24-Oct-16	23-Nov-16	ARAN PARKER
COKE	R304	Valve	Externally Actuated	Light Liquid	Accessible	FALSE	1035	1/2" VALVE @ COOLER SUCTION POT DRAIN LINE W/1FL, 6SC & 4WC	03	3	Yes, equipment can be isolated from service	TRUE	FALSE	FALSE	40 CFR 61 Subpart L	UNCLASSIFIED	24-Oct-16	23-Nov-16	ARAN PARKER
COKE	R305	Valve	Externally Actuated	Light Liquid	Accessible	FALSE	1032	¾" VALVE ON 3" DRAIN TO SOUTH POT	01	0.8	Yes, equipment can be isolated from service	TRUE	FALSE	FALSE	40 CFR 61 Subpart L	UNCLASSIFIED	24-Oct-16	23-Nov-16	ARAN PARKER
COKE	R306	Valve	Externally Actuated	Light Liquid	Accessible	FALSE	1095	6" VALVE @ PRIMARY COOLER SUMP W/4" VALVE, 2FL & 7WC	05	6	Yes, equipment can be isolated from service	TRUE	FALSE	FALSE	40 CFR 61 Subpart L	UNCLASSIFIED	24-Oct-16	23-Nov-16	Matt Case
COKE	R307	Valve	Externally Actuated	Light Liquid	Accessible	FALSE	1089	6" VALVE @ PRIMARY COOLER SUMP W/2FL & 6WC	03	6	Yes, equipment can be isolated from service	TRUE	FALSE	FALSE	40 CFR 61 Subpart L	UNCLASSIFIED	24-Oct-16	23-Nov-16	ARAN PARKER
COKE	R308	Valve	Externally Actuated	Light Liquid	Accessible	FALSE	1084	6", 6" CHECK & (3) ½" VALVES WEST PRIM. COOL. PUMP OUT. W/4F	07	6	Yes, equipment can be isolated from service	TRUE	FALSE	FALSE	40 CFR 61 Subpart L	UNCLASSIFIED	24-Oct-16	23-Nov-16	ARAN PARKER
COKE	R308A	Valve	Externally Actuated	Light Liquid	Accessible	FALSE	1085	6" CHECK VALVES WEST PRIM. COOL. PUMP OUT. W/4FL, 8WC & 22S	04	6	Yes, equipment can be isolated from service	TRUE	FALSE	FALSE	40 CFR 61 Subpart L	UNCLASSIFIED	24-Oct-16	23-Nov-16	ARAN PARKER
COKE	R308B	Valve	Externally Actuated	Light Liquid	Accessible	FALSE	1086	½" VALVES WEST PRIM. COOL. PUMP OUT. W/4FL, 8WC & 22SC	04	0.5	Yes, equipment can be isolated from service	TRUE	FALSE	FALSE	40 CFR 61 Subpart L	UNCLASSIFIED	24-Oct-16	23-Nov-16	ARAN PARKER
COKE	R308C	Valve	Externally Actuated	Light Liquid	Accessible	FALSE	1087	½" VALVES WEST PRIM. COOL. PUMP OUT. W/4FL, 8WC & 22SC	05	0.5	Yes, equipment can be isolated from service	TRUE	FALSE	FALSE	40 CFR 61 Subpart L	UNCLASSIFIED	24-Oct-16	23-Nov-16	ARAN PARKER
COKE	R308D	Valve	Externally Actuated	Light Liquid	Accessible	FALSE	1088	½" VALVES WEST PRIM. COOL. PUMP OUT. W/4FL, 8WC & 22SC	05	0.5	Yes, equipment can be isolated from service	TRUE	FALSE	FALSE	40 CFR 61 Subpart L	UNCLASSIFIED	24-Oct-16	23-Nov-16	ARAN PARKER
COKE	R309	Valve	Externally Actuated	Light Liquid	Accessible	FALSE	1026	3" DRAIN FROM PRIM. COOLER SUCTION POT	03	0.8	Yes, equipment can be isolated from service	TRUE	FALSE	FALSE	40 CFR 61 Subpart L	UNCLASSIFIED	24-Oct-16	23-Nov-16	ARAN PARKER
COKE	R31	Valve	Externally Actuated	Light Liquid	Accessible	FALSE	276	½" VALVE & TEMP. GAUGE PROCESS WATER COOLING TOWER OUTLET W	1P8	0.5	Yes, equipment can be isolated from service	TRUE	FALSE	FALSE	40 CFR 61 Subpart L	UNCLASSIFIED	24-Oct-16	23-Nov-16	ARAN PARKER
COKE	R310	Valve	Externally Actuated	Light Liquid	Accessible	FALSE	1027	4" DRAIN FROM PRECIPITATOR (1A)	02	0.8	Yes, equipment can be isolated from service	TRUE	FALSE	FALSE	40 CFR 61 Subpart L	UNCLASSIFIED	24-Oct-16	23-Nov-16	ARAN PARKER
COKE	R311	Valve	Externally Actuated	Light Liquid	Accessible	FALSE	1029	4" DRAIN FROM PRECIPITATOR (1B)	03	0.5	Yes, equipment can be isolated from service	TRUE	FALSE	FALSE	40 CFR 61 Subpart L	UNCLASSIFIED	24-Oct-16	23-Nov-16	ARAN PARKER
COKE	R312	Flange	Standard Service	Light Liquid	Accessible	FALSE	1030	(5) 3" DRAINS FROM EXHAUSTER TO SOUTH CONDENSATE POT	03	3	Yes, equipment can be isolated from service	TRUE	FALSE	FALSE	40 CFR 61 Subpart L	UNCLASSIFIED	24-Oct-16	23-Nov-16	ARAN PARKER
COKE	R313	Flange	Standard Service	Light Liquid	Accessible	FALSE	1031	3" FL ON SOUTH CONDENSATE POT	02	3	Yes, equipment can be isolated from service	TRUE	FALSE	FALSE	40 CFR 61 Subpart L	UNCLASSIFIED	24-Oct-16	23-Nov-16	ARAN PARKER
COKE	R314	Valve	Externally Actuated	Light Liquid	Accessible	FALSE	1024	3" PIPE W/2FL, 1/2"VALVE, 4SC & 4WC	03	0.5	Yes, equipment can be isolated from service	TRUE	FALSE	FALSE	40 CFR 61 Subpart L	UNCLASSIFIED	24-Oct-16	23-Nov-16	Matt Case
COKE	R315	Valve	Externally Actuated	Light Liquid	Accessible	FALSE	1025	3" DRAIN AND ½ "VALVE (NORTH CONDENSATE POT)	03	0.5	Yes, equipment can be isolated from service	TRUE	FALSE	FALSE	40 CFR 61 Subpart L	UNCLASSIFIED	24-Oct-16	23-Nov-16	ARAN PARKER
COKE	R316	Valve	Externally Actuated	Light Liquid	Accessible	FALSE	1388	2" TAR VALVE EAST TAR TANK	11	2	Yes, equipment can be isolated from service	TRUE	FALSE	FALSE	40 CFR 61 Subpart L	UNCLASSIFIED	24-Oct-16	23-Nov-16	ARAN PARKER

UNIT_CODE	TAG_ NUMBER	EQUITYPE_DESC	CONFIG_DESC	SERVICE_DESC	ACCESS_DESC	CLOSED_VENT _SYSTEM	ROUTE	LOCATION	LEVEL	SIZE	IFSTYPE_DESC	ATTEMPT_A LLOWED	UNDER_300_H OURS_SERVIC E	POTENTIAL_ OPEN_END	GROUP_DESC	PRODUCT_DESC	DATE_ADDED	DATE_IN_SERVICE	TECH_DESC
COKE	R317	Valve	Externally Actuated	Light Liquid	Accessible	FALSE	1028	2" DRAIN FROM CONDENSATE GAS POT IN EXHAUSTER BLDG.	02	0.5	Yes, equipment can be isolated from service	TRUE	FALSE	FALSE	40 CFR 61 Subpart L	UNCLASSIFIED	24-Oct-16	23-Nov-16	ARAN PARKER
COKE	R318	Valve	Externally Actuated	Light Liquid	Accessible	FALSE	1022	(5) 3" DRAINS FROM NORTH EXHAUSTER	00	1	Yes, equipment can be isolated from service	TRUE	FALSE	FALSE	40 CFR 61 Subpart L	UNCLASSIFIED	24-Oct-16	07-Dec-16	ARAN PARKER
COKE	R319	Flange	Standard Service	Light Liquid	Accessible	FALSE	1017	2" DRAIN FROM COG IN EXHAUSTER	00	8	Yes, equipment can be isolated from service	TRUE	FALSE	FALSE	40 CFR 61 Subpart L	UNCLASSIFIED	24-Oct-16	07-Dec-16	ARAN PARKER
COKE	R32	Valve	Externally Actuated	Light Liquid	Accessible	FALSE	275	¾" VALVE & PRESSURE GAUGE PROCESS WATER COOLING TOWER INLET	1P8	0.8	Yes, equipment can be isolated from service	TRUE	FALSE	FALSE	40 CFR 61 Subpart L	UNCLASSIFIED	24-Oct-16	23-Nov-16	ARAN PARKER
COKE	R320	Flange	Standard Service	Light Liquid	Accessible	FALSE	1018	4" DRAIN FROM PRECIPITATOR (C) ½ "VALVE	00	4	Yes, equipment can be isolated from service	TRUE	FALSE	FALSE	40 CFR 61 Subpart L	UNCLASSIFIED	24-Oct-16	07-Dec-16	ARAN PARKER
COKE	R321	Valve	Externally Actuated	Light Liquid	Accessible	FALSE	1020	4" DRAIN FROM PRECIPITATOR (B) ¾ "VALVE	00	4	Yes, equipment can be isolated from service	TRUE	FALSE	FALSE	40 CFR 61 Subpart L	UNCLASSIFIED	24-Oct-16	07-Dec-16	Matt Case
COKE	R322	Valve	Externally Actuated	Light Liquid	Accessible	FALSE	699	3" DRAIN AND ½" VALVE FROM COG POT IN EXHAUSTER	00	0.5	Yes, equipment can be isolated from service	TRUE	FALSE	FALSE	40 CFR 61 Subpart L	UNCLASSIFIED	24-Oct-16	13-Dec-16	ARAN PARKER
COKE	R323	Valve	Externally Actuated	Light Liquid	Accessible	FALSE	1021	4" TO 3" DRAIN @ PRIMARY COOLER W/½" VALVE, 5FL & 15WC	00	0	Yes, equipment can be isolated from service	TRUE	FALSE	FALSE	40 CFR 61 Subpart L	UNCLASSIFIED	24-Oct-16	07-Dec-16	ARAN PARKER
COKE	R324	Flange	Standard Service	Light Liquid	Accessible	FALSE	1019	NORTH CONDENSATE SEAL POT	00	6	Yes, equipment can be isolated from service	TRUE	FALSE	FALSE	40 CFR 61 Subpart L	UNCLASSIFIED	24-Oct-16	07-Dec-16	ARAN PARKER
COKE	R325	Valve	Externally Actuated	Light Liquid	Accessible	FALSE	1389	2" TAR VALVE EAST TAR TANK	11	2	Yes, equipment can be isolated from service	TRUE	FALSE	FALSE	40 CFR 61 Subpart L	UNCLASSIFIED	24-Oct-16	23-Nov-16	ARAN PARKER
COKE	R326	Valve	Externally Actuated	Light Liquid	Accessible	FALSE	1147	14" FLUSHING LIQUOR VALVE (TO OVENS) 1" VALVE	04	4	Yes, equipment can be isolated from service	TRUE	FALSE	FALSE	40 CFR 61 Subpart L	UNCLASSIFIED	24-Oct-16	23-Nov-16	ARAN PARKER
COKE	R326A	Valve	Externally Actuated	Light Liquid	Accessible	FALSE	1148	FLUSHING LIQUOR VALVE (TO OVENS) 1" VALVE	04	1	Yes, equipment can be isolated from service	TRUE	FALSE	FALSE	40 CFR 61 Subpart L	UNCLASSIFIED	24-Oct-16	23-Nov-16	ARAN PARKER
COKE	R327	Valve	Externally Actuated	Light Liquid	Accessible	FALSE	1142	4" FLUSHING LIQUOR VALVE @ STRAINER	02	4	Yes, equipment can be isolated from service	TRUE	FALSE	FALSE	40 CFR 61 Subpart L	UNCLASSIFIED	24-Oct-16	23-Nov-16	ARAN PARKER
COKE	R328	Valve	Externally Actuated	Light Liquid	Accessible	FALSE	1137	14" FLUSHING LIQUOR VALVE (TO OVENS) 1" VALVE	010	14	Yes, equipment can be isolated from service	TRUE	FALSE	FALSE	40 CFR 61 Subpart L	UNCLASSIFIED	24-Oct-16	23-Nov-16	ARAN PARKER
COKE	R328A	Valve	Externally Actuated	Light Liquid	Accessible	FALSE	1138	FLUSHING LIQUOR VALVE (TO OVENS) 1" VALVE	010	1	Yes, equipment can be isolated from service	TRUE	FALSE	FALSE	40 CFR 61 Subpart L	UNCLASSIFIED	24-Oct-16	23-Nov-16	ARAN PARKER
COKE	R329	Valve	Externally Actuated	Light Liquid	Accessible	FALSE	1141	4" FLUSHING LIQUOR BLOW DOWN VALVE	09	4	Yes, equipment can be isolated from service	TRUE	FALSE	FALSE	40 CFR 61 Subpart L	UNCLASSIFIED	24-Oct-16	23-Nov-16	ARAN PARKER
COKE	R33	Valve	Externally Actuated	Light Liquid	Accessible	FALSE	274	6" VALVE PROCESS WATER COOLING TOWER OUTLET W/4FL, 21WC &	1P8	6	Yes, equipment can be isolated from service	TRUE	FALSE	FALSE	40 CFR 61 Subpart L	UNCLASSIFIED	24-Oct-16	23-Nov-16	ARAN PARKER
COKE	R330	Valve	Externally Actuated	Light Liquid	Accessible	FALSE	1140	12" FLUSHING LIQUOR BY PASS VALVE	09	12	Yes, equipment can be isolated from service	TRUE	FALSE	FALSE	40 CFR 61 Subpart L	UNCLASSIFIED	24-Oct-16	23-Nov-16	ARAN PARKER
COKE	R331	Valve	Externally Actuated	Light Liquid	Accessible	FALSE	1136	2" FLUSHING LIQUOR BY PASS VALVE	08	2	Yes, equipment can be isolated from service	TRUE	FALSE	FALSE	40 CFR 61 Subpart L	UNCLASSIFIED	24-Oct-16	23-Nov-16	ARAN PARKER
COKE	R332	Valve	Externally Actuated	Light Liquid	Accessible	FALSE	1139	3" FLUSHING LIQUOR BLOW DOWN VALVE	05	3	Yes, equipment can be isolated from service	TRUE	FALSE	FALSE	40 CFR 61 Subpart L	UNCLASSIFIED	24-Oct-16	23-Nov-16	ARAN PARKER
COKE	R333	Valve	Externally Actuated	Light Liquid	Accessible	FALSE	1135	3" FLUSHING LIQUOR BLOW DOWN BY PASS VALVE	08	3	Yes, equipment can be isolated from service	TRUE	FALSE	FALSE	40 CFR 61 Subpart L	UNCLASSIFIED	24-Oct-16	23-Nov-16	ARAN PARKER
COKE	R334	Valve	Externally Actuated	Light Liquid	Accessible	FALSE	1133	3" FLUSHING LIQUOR BLOW DOWN & ¾" VALVE	04	3	Yes, equipment can be isolated from service	TRUE	FALSE	FALSE	40 CFR 61 Subpart L	UNCLASSIFIED	24-Oct-16	23-Nov-16	ARAN PARKER
COKE	R334A	Valve	Externally Actuated	Light Liquid	Accessible	FALSE	1134	FLUSHING LIQUOR BLOW DOWN & ¾" VALVE	05	0.8	Yes, equipment can be isolated from service	TRUE	FALSE	FALSE	40 CFR 61 Subpart L	UNCLASSIFIED	24-Oct-16	23-Nov-16	ARAN PARKER
COKE	R335	Valve	Externally Actuated	Light Liquid	Accessible	FALSE	1129	12" FLUSHING LIQUOR VALVE, 1" VALVE & 12" CHECK VALVE	06	12	Yes, equipment can be isolated from service	TRUE	FALSE	FALSE	40 CFR 61 Subpart L	UNCLASSIFIED	24-Oct-16	23-Nov-16	ARAN PARKER
COKE	R335A	Valve	Externally Actuated	Light Liquid	Accessible	FALSE	1130	FLUSHING LIQUOR 1" VALVE	06	1	Yes, equipment can be isolated from service	TRUE	FALSE	FALSE	40 CFR 61 Subpart L	UNCLASSIFIED	24-Oct-16	23-Nov-16	ARAN PARKER
COKE	R335B	Valve	Externally Actuated	Light Liquid	Accessible	FALSE	1131	FLUSHING LIQUOR 12" CHECK VALVE	06	12	Yes, equipment can be isolated from service	TRUE	FALSE	FALSE	40 CFR 61 Subpart L	UNCLASSIFIED	24-Oct-16	23-Nov-16	ARAN PARKER
COKE	R336	Valve	Externally Actuated	Light Liquid	Accessible	FALSE	1124	12" FLUSHING LIQUOR VALVE, 1" VALVE & 12" CHECK VALVE	07	12	Yes, equipment can be isolated from service	TRUE	FALSE	FALSE	40 CFR 61 Subpart L	UNCLASSIFIED	24-Oct-16	23-Nov-16	ARAN PARKER
COKE	R336A	Valve	Externally Actuated	Light Liquid	Accessible	FALSE	1125	FLUSHING LIQUOR 1" VALVE	08	1	Yes, equipment can be isolated from service	TRUE	FALSE	FALSE	40 CFR 61 Subpart L	UNCLASSIFIED	24-Oct-16	23-Nov-16	ARAN PARKER
COKE	R336B	Valve	Externally Actuated	Light Liquid	Accessible	FALSE	1126	FLUSHING LIQUOR 12" CHECK VALVE	08	12	Yes, equipment can be isolated from service	TRUE	FALSE	FALSE	40 CFR 61 Subpart L	UNCLASSIFIED	24-Oct-16	23-Nov-16	ARAN PARKER
COKE	R337	Valve	Externally Actuated	Light Liquid	Accessible	FALSE	1118	12" FLUSHING LIQUOR VALVE, 1" VALVE, 12" CHECK VALVE & 3" SI	08	12	Yes, equipment can be isolated from service	TRUE	FALSE	FALSE	40 CFR 61 Subpart L	UNCLASSIFIED	24-Oct-16	23-Nov-16	ARAN PARKER
COKE	R337A	Valve	Externally Actuated	Light Liquid	Accessible	FALSE	1119	FLUSHING LIQUOR VALVE 1" VALVE	08	1	Yes, equipment can be isolated from service	TRUE	FALSE	FALSE	40 CFR 61 Subpart L	UNCLASSIFIED	24-Oct-16	23-Nov-16	ARAN PARKER
COKE	R337B	Valve	Externally Actuated	Light Liquid	Accessible	FALSE	1120	FLUSHING LIQUOR VALVE 12" CHECK VALVE	08	12	Yes, equipment can be isolated from service	TRUE	FALSE	FALSE	40 CFR 61 Subpart L	UNCLASSIFIED	24-Oct-16	23-Nov-16	ARAN PARKER
COKE	R337C	Valve	Externally Actuated	Light Liquid	Accessible	FALSE	1121	FLUSHING LIQUOR 3" SIDE SCREEN VALVE	08	3	Yes, equipment can be isolated from service	TRUE	FALSE	FALSE	40 CFR 61 Subpart L	UNCLASSIFIED	24-Oct-16	23-Nov-16	ARAN PARKER
COKE	R338	Valve	Externally Actuated	Light Liquid	Accessible	FALSE	1115	14" FLUSHING LIQUOR VALVE & 2" VALVE	06	14	Yes, equipment can be isolated from service	TRUE	FALSE	FALSE	40 CFR 61 Subpart L	UNCLASSIFIED	24-Oct-16	23-Nov-16	ARAN PARKER
COKE	R338A	Valve	Externally Actuated	Light Liquid	Accessible	FALSE	1116	FLUSHING LIQUOR 2" VALVE	06	2	Yes, equipment can be isolated from service	TRUE	FALSE	FALSE	40 CFR 61 Subpart L	UNCLASSIFIED	24-Oct-16	23-Nov-16	ARAN PARKER
COKE	R339	Valve	Externally Actuated	Light Liquid	Accessible	FALSE	1113	14" FLUSHING LIQUOR VALVE 2" VALVE	06	14	Yes, equipment can be isolated from service	TRUE	FALSE	FALSE	40 CFR 61 Subpart L	UNCLASSIFIED	24-Oct-16	23-Nov-16	ARAN PARKER
COKE	R339A	Valve	Externally Actuated	Light Liquid	Accessible	FALSE	1114	FLUSHING LIQUOR 2" VALVE	06	2	Yes, equipment can be isolated from service	TRUE	FALSE	FALSE	40 CFR 61 Subpart L	UNCLASSIFIED	24-Oct-16	23-Nov-16	ARAN PARKER
COKE	R34	Valve	Externally Actuated	Light Liquid	Accessible	FALSE	271	6" VALVE PROCESS WATER COOLING TOWER INLET W/4FL, 21WC & 35(	1P8	6	Yes, equipment can be isolated from service	TRUE	FALSE	FALSE	40 CFR 61 Subpart L	UNCLASSIFIED	24-Oct-16	23-Nov-16	ARAN PARKER
COKE	R341	Valve	Externally Actuated	Light Liquid	Accessible	FALSE	1127	14" FLUSHING LIQUOR V 2" V	06	14	Yes, equipment can be isolated from service	TRUE	FALSE	FALSE	40 CFR 61 Subpart L	UNCLASSIFIED	24-Oct-16	23-Nov-16	ARAN PARKER
COKE	R341A	Valve	Externally Actuated	Light Liquid	Accessible	FALSE	1128	FLUSHING LIQUOR 2" V	06	2	Yes, equipment can be isolated from service	TRUE	FALSE	FALSE	40 CFR 61 Subpart L	UNCLASSIFIED	24-Oct-16	23-Nov-16	ARAN PARKER
COKE	R342	Valve	Externally Actuated	Light Liquid	Accessible	FALSE	1106	3" & (3) ½" VALVES EAST TAR TRANSFER OUTLET W/10SC	04	3	Yes, equipment can be isolated from service	TRUE	FALSE	FALSE	40 CFR 61 Subpart L	UNCLASSIFIED	24-Oct-16	23-Nov-16	ARAN PARKER
COKE	R342A	Valve	Externally Actuated	Light Liquid	Accessible	FALSE	1107	½" VALVES EAST TAR TRANSFER OUTLET W/10SC	04	0.5	Yes, equipment can be isolated from service	TRUE	FALSE	FALSE	40 CFR 61 Subpart L	UNCLASSIFIED	24-Oct-16	23-Nov-16	ARAN PARKER
COKE	R342B	Valve	Externally Actuated	Light Liquid	Accessible	FALSE	1108	½" VALVES EAST TAR TRANSFER OUTLET W/10SC	04	0.5	Yes, equipment can be isolated from service	TRUE	FALSE	FALSE	40 CFR 61 Subpart L	UNCLASSIFIED	24-Oct-16	23-Nov-16	ARAN PARKER
COKE	R342C	Valve	Externally Actuated	Light Liquid	Accessible	FALSE	1109	½" VALVES EAST TAR TRANSFER OUTLET W/10SC	04	0.5	Yes, equipment can be isolated from service	TRUE	FALSE	FALSE	40 CFR 61 Subpart L	UNCLASSIFIED	24-Oct-16	23-Nov-16	ARAN PARKER
COKE	R343	Valve	Externally Actuated	Light Liquid	Accessible	FALSE	1102	3" & (3) ½" VALVES WEST TAR TRANSFER OUTLET W/9SC	06	3	Yes, equipment can be isolated from service	TRUE	FALSE	FALSE	40 CFR 61 Subpart L	UNCLASSIFIED	24-Oct-16	23-Nov-16	ARAN PARKER
COKE	R343A	Valve	Externally Actuated	Light Liquid	Accessible	FALSE	1103	½" VALVES WEST TAR TRANSFER OUTLET W/9SC	06	0.5	Yes, equipment can be isolated from service	TRUE	FALSE	FALSE	40 CFR 61 Subpart L	UNCLASSIFIED	24-Oct-16	23-Nov-16	ARAN PARKER
COKE	R343B	Valve	Externally Actuated	Light Liquid	Accessible	FALSE	1104	½" VALVES WEST TAR TRANSFER OUTLET W/9SC	06	0.5	Yes, equipment can be isolated from service	TRUE	FALSE	FALSE	40 CFR 61 Subpart L	UNCLASSIFIED	24-Oct-16	23-Nov-16	ARAN PARKER
COKE	R343C	Valve	Externally Actuated	Light Liquid	Accessible	FALSE	1105	½" VALVES WEST TAR TRANSFER OUTLET W/9SC	06	0.5	Yes, equipment can be isolated from service	TRUE	FALSE	FALSE	40 CFR 61 Subpart L	UNCLASSIFIED	24-Oct-16	23-Nov-16	ARAN PARKER
COKE	R344	Valve	Externally Actuated	Light Liquid	Accessible	FALSE	1111	3" VALVE @ TAR TRANSFER PUMPS	02	3	Yes, equipment can be isolated from service	TRUE	FALSE	FALSE	40 CFR 61 Subpart L	UNCLASSIFIED	24-Oct-16	23-Nov-16	ARAN PARKER
COKE	R345	Valve	Externally Actuated	Light Liquid	Accessible	FALSE	1110	3" VALVE WEST TAR TRANSFER PUMP	02	3	Yes, equipment can be isolated from service	TRUE	FALSE	FALSE	40 CFR 61 Subpart L	UNCLASSIFIED	24-Oct-16	23-Nov-16	ARAN PARKER
COKE	R346	Valve	Externally Actuated	Light Liquid	Accessible	FALSE	1112	3" VALVE @ TAR TRANSFER PUMPS	02	3	Yes, equipment can be isolated from service	TRUE	FALSE	FALSE	40 CFR 61 Subpart L	UNCLASSIFIED	24-Oct-16	23-Nov-16	ARAN PARKER
COKE	R347	Valve	Externally Actuated	Light Liquid	Accessible	FALSE	1096	4" CONTROL VALVE @ PRIMARY COOLER SUMP W/2FL & 6WC	02	4	Yes, equipment can be isolated from service	TRUE	FALSE	FALSE	40 CFR 61 Subpart L	UNCLASSIFIED	24-Oct-16	23-Nov-16	ARAN PARKER
COKE	R348	Valve	Externally Actuated	Light Liquid	Accessible	FALSE	1092	4" BYPASS VALVE @ PRIMARY COOLER SUMP W/2FL & 3WC	08	4	Yes, equipment can be isolated from service	TRUE	FALSE	FALSE	40 CFR 61 Subpart L	UNCLASSIFIED	24-Oct-16	23-Nov-16	ARAN PARKER
COKE	R349	Valve	Externally Actuated	Light Liquid	Accessible	FALSE	1143	4" & (2) ¾" VALVES @ FLUSHING LIQUOR STRAINER W/2FL, 10WC &	04	4	Yes, equipment can be isolated from service	TRUE	FALSE	FALSE	40 CFR 61 Subpart L	UNCLASSIFIED	24-Oct-16	23-Nov-16	ARAN PARKER
COKE	R349A	Valve	Externally Actuated	Light Liquid	Accessible	FALSE	1144	¾" VALVES @ FLUSHING LIQUOR STRAINER W/2FL, 10WC & 4SC	04	0.8	Yes, equipment can be isolated from service	TRUE	FALSE	FALSE	40 CFR 61 Subpart L	UNCLASSIFIED	24-Oct-16	23-Nov-16	ARAN PARKER
COKE	R349B	Valve	Externally Actuated	Light Liquid	Accessible	FALSE	1145	¾" VALVES @ FLUSHING LIQUOR STRAINER W/2FL, 10WC & 4SC	04	0.8	Yes, equipment can be isolated from service	TRUE	FALSE	FALSE	40 CFR 61 Subpart L	UNCLASSIFIED	24-Oct-16	23-Nov-16	Matt Case
COKE	R35	Valve	Externally Actuated	Light Liquid	Accessible	FALSE	272	6" VALVE PROCESS WATER COOLING TOWER INLET W/4FL, 24WC & 3SC	1P8	6	Yes, equipment can be isolated from service	TRUE	FALSE	FALSE	40 CFR 61 Subpart L	UNCLASSIFIED	24-Oct-16	23-Nov-16	ARAN PARKER
COKE	R350	Valve	Externally Actuated	Light Liquid	Accessible	FALSE	1146	6" VALVE @ FLUSHING LIQUOR STRAINER W/3FL & 6WC	00	6	Yes, equipment can be isolated from service	TRUE	FALSE	FALSE	40 CFR 61 Subpart L	UNCLASSIFIED	24-Oct-16	23-Nov-16	ARAN PARKER
COKE	R351	Valve	Externally Actuated	Light Liquid	Difficult to Monitor	FALSE	0	6", 3" & 1" VALVES LIQUOR LINE NEAR LITTLE HOLDER W/4FL, 7WC	035	6	Yes, equipment can be isolated from service	TRUE	FALSE	FALSE	40 CFR 61 Subpart L	UNCLASSIFIED	24-Oct-16	23-Nov-16	ARAN PARKER
COKE	R351A	Valve	Externally Actuated	Light Liquid	Difficult to Monitor	FALSE	0	3" VALVES LIQUOR LINE NEAR LITTLE HOLDER W/4FL, 7WC & 4SC	035	3	Yes, equipment can be isolated from service	TRUE	FALSE	FALSE	40 CFR 61 Subpart L	UNCLASSIFIED	24-Oct-16	23-Nov-16	ARAN PARKER
COKE	R351B	Valve	Externally Actuated	Light Liquid	Difficult to Monitor	FALSE	0	1" VALVES LIQUOR LINE NEAR LITTLE HOLDER W/4FL, 7WC & 4SC	035	1	Yes, equipment can be isolated from service	TRUE	FALSE	FALSE	40 CFR 61 Subpart L	UNCLASSIFIED	24-Oct-16	23-Nov-16	ARAN PARKER
COKE	R352	Valve	Externally Actuated	Light Liquid	Difficult to Monitor	FALSE	1149	2" VALVE FLUSHING LIQUOR OVERFLOW TO SUMP W/3FL, 16WC & 4SC	035	2	Yes, equipment can be isolated from service	TRUE	FALSE	FALSE	40 CFR 61 Subpart L	UNCLASSIFIED	24-Oct-16	23-Nov-16	ARAN PARKER
COKE	R353	Valve	Externally Actuated	Light Liquid	Accessible	FALSE	1150	4" VALVE FLUSHING LIQUOR DRAIN TO SUMP W/4FL & 12WC	04	4	Yes, equipment can be isolated from service	TRUE	FALSE	FALSE	40 CFR 61 Subpart L	UNCLASSIFIED	24-Oct-16	23-Nov-16	ARAN PARKER
COKE	R354	Flange	Standard Service	Light Liquid	Accessible	FALSE	1153	MANHOLE @ FLUSHING LIQUOR SUMP W/2FL	03	36	Yes, equipment can be isolated from service	TRUE	FALSE	FALSE	40 CFR 61 Subpart L	UNCLASSIFIED	24-Oct-16	23-Nov-16	ARAN PARKER
COKE	R355	Valve	Externally Actuated	Light Liquid	Accessible	FALSE	1151	3" & ¾" VALVES @ FLUSHING LIQUOR SUMP W/2FL, 3WC & 6SC	02	3	Yes, equipment can be isolated from service	TRUE	FALSE	FALSE	40 CFR 61 Subpart L	UNCLASSIFIED	24-Oct-16	23-Nov-16	ARAN PARKER
COKE	R355A	Valve	Externally Actuated	Light Liquid	Accessible	FALSE	1152	¾" VALVES @ FLUSHING LIQUOR SUMP W/2FL, 3WC & 6SC	02	0.8	Yes, equipment can be isolated from service	TRUE	FALSE	FALSE	40 CFR 61 Subpart L	UNCLASSIFIED	24-Oct-16	23-Nov-16	ARAN PARKER
COKE	R356	Valve	Externally Actuated	Light Liquid	Accessible	FALSE	1155	4", 1" & ½" VALVES EAST TAR DECANTER BOTTOM W/3FL, 2WC & 6SC	00	4	Yes, equipment can be isolated from service	TRUE	FALSE	FALSE	40 CFR 61 Subpart L	UNCLASSIFIED	24-Oct-16	23-Nov-16	ARAN PARKER
COKE	R356A	Valve	Externally Actuated	Light Liquid	Accessible	FALSE	1156	1" VALVES EAST TAR DECANTER BOTTOM W/3FL, 2WC & 6SC	00	1	Yes, equipment can be isolated from service	TRUE	FALSE	FALSE	40 CFR 61 Subpart L	UNCLASSIFIED	24-Oct-16	23-Nov-16	ARAN PARKER
COKE	R356B	Valve	Externally Actuated	Light Liquid	Accessible	FALSE	1157	½" VALVES EAST TAR DECANTER BOTTOM W/3FL, 2WC & 6SC	00	0.5	Yes, equipment can be isolated from service	TRUE	FALSE	FALSE	40 CFR 61 Subpart L	UNCLASSIFIED	24-Oct-16	23-Nov-16	ARAN PARKER
COKE	R357	Valve	Externally Actuated	Light Liquid	Accessible	FALSE	1158	4" VALVE EAST TAR DECANTER BOTTOM	00	4	Yes, equipment can be isolated from service	TRUE	FALSE	FALSE	40 CFR 61 Subpart L	UNCLASSIFIED	24-Oct-16	23-Nov-16	ARAN PARKER
COKE	R358	Valve	Externally Actuated	Light Liquid	Accessible	FALSE	1159	6" & ¾" VALVES EAST TAR DECANTER BOTTOM W/2FL, 4WC & 9SC	00	6	Yes, equipment can be isolated from service	TRUE	FALSE	FALSE	40 CFR 61 Subpart L	UNCLASSIFIED	24-Oct-16	23-Nov-16	ARAN PARKER
COKE	R358A	Valve	Externally Actuated	Light Liquid	Accessible	FALSE	1160	¾" VALVES EAST TAR DECANTER BOTTOM W/2FL, 4WC & 9SC	00	0.8	Yes, equipment can be isolated from service	TRUE	FALSE	FALSE	40 CFR 61 Subpart L	UNCLASSIFIED	24-Oct-16	23-Nov-16	ARAN PARKER
COKE	R36	Valve	Externally Actuated	Light Liquid	Accessible	FALSE	273	6" VALVE PROCESS WATER COOLING TOWER OUTLET W/4FL, 24WC & 3S	1P6	6	Yes, equipment can be isolated from service	TRUE	FALSE	FALSE	40 CFR 61 Subpart L	UNCLASSIFIED	24-Oct-16	23-Nov-16	ARAN PARKER
COKE	R360	Valve	Externally Actuated	Light Liquid	Accessible	FALSE	1161	3" VALVE EAST TAR DECANTER BOTTOM	00	3	Yes, equipment can be isolated from service	TRUE	FALSE	FALSE	40 CFR 61 Subpart L	UNCLASSIFIED	24-Oct-16	23-Nov-16	ARAN PARKER
COKE	R361	Valve	Externally Actuated	Light Liquid	Accessible	FALSE	1176	(12) 1" & (2) ½" VALVES EAST TAR DECANTER BOTTOM W/21WC & 96	03	1	Yes, equipment can be isolated from service	TRUE	FALSE	FALSE	40 CFR 61 Subpart L	UNCLASSIFIED	24-Oct-16	23-Nov-16	ARAN PARKER
COKE	R361A	Valve	Externally Actuated	Light Liquid	Accessible	FALSE	1177	1" VALVES EAST TAR DECANTER BOTTOM W/21WC & 96SC	03	1	Yes, equipment can be isolated from service	TRUE	FALSE	FALSE	40 CFR 61 Subpart L	UNCLASSIFIED	24-Oct-16	23-Nov-16	ARAN PARKER
COKE	R361B	Valve	Externally Actuated	Light Liquid	Accessible	FALSE	1178	1" VALVES EAST TAR DECANTER BOTTOM W/21WC & 96SC	03	1	Yes, equipment can be isolated from service	TRUE	FALSE	FALSE	40 CFR 61 Subpart L	UNCLASSIFIED	24-Oct-16	23-Nov-16	ARAN PARKER
COKE	R361C	Valve	Externally Actuated	Light Liquid	Accessible	FALSE	1179	1" VALVES EAST TAR DECANTER BOTTOM W/21WC & 96SC	03	1	Yes, equipment can be isolated from service	TRUE	FALSE	FALSE	40 CFR 61 Subpart L	UNCLASSIFIED	24-Oct-16	23-Nov-16	ARAN PARKER

UNIT_CODE	TAG_ NUMBER	EQUITYPE_DESC	CONFIG_DESC	SERVICE_DESC	ACCESS_DESC	CLOSED_VENT _SYSTEM	ROUTE	LOCATION	LEVEL	SIZE	IFSTYPE_DESC	ATTEMPT_A LLOWED	UNDER_300_H OURS_SERVIC E	POTENTIAL_ OPEN_END	GROUP_DESC	PRODUCT_DESC	DATE_ADDED	DATE_IN_SERVICE	TECH_DESC
COKE	R361D	Valve	Externally Actuated	Light Liquid	Accessible	FALSE	1180	1" VALVES EAST TAR DECANTER BOTTOM W/21WC & 96SC	03	1	Yes, equipment can be isolated from service	TRUE	FALSE	FALSE	40 CFR 61 Subpart L	UNCLASSIFIED	24-Oct-16	23-Nov-16	ARAN PARKER
COKE	R361E	Valve	Externally Actuated	Light Liquid	Accessible	FALSE	1181	1" VALVES EAST TAR DECANTER BOTTOM W/21WC & 96SC	03	1	Yes, equipment can be isolated from service	TRUE	FALSE	FALSE	40 CFR 61 Subpart L	UNCLASSIFIED	24-Oct-16	23-Nov-16	ARAN PARKER
COKE	R361F	Valve	Externally Actuated	Light Liquid	Accessible	FALSE	1182	1" VALVES EAST TAR DECANTER BOTTOM W/21WC & 96SC	03	1	Yes, equipment can be isolated from service	TRUE	FALSE	FALSE	40 CFR 61 Subpart L	UNCLASSIFIED	24-Oct-16	23-Nov-16	ARAN PARKER
COKE	R361G	Valve	Externally Actuated	Light Liquid	Accessible	FALSE	1183	1" VALVES EAST TAR DECANTER BOTTOM W/21WC & 96SC	03	1	Yes, equipment can be isolated from service	TRUE	FALSE	FALSE	40 CFR 61 Subpart L	UNCLASSIFIED	24-Oct-16	23-Nov-16	ARAN PARKER
COKE	R361H	Valve	Externally Actuated	Light Liquid	Accessible	FALSE	1184	1" VALVES EAST TAR DECANTER BOTTOM W/21WC & 96SC	03	1	Yes, equipment can be isolated from service	TRUE	FALSE	FALSE	40 CFR 61 Subpart L	UNCLASSIFIED	24-Oct-16	23-Nov-16	ARAN PARKER
COKE	R361I	Valve	Externally Actuated	Light Liquid	Accessible	FALSE	1185	1" VALVES EAST TAR DECANTER BOTTOM W/21WC & 96SC	03	1	Yes, equipment can be isolated from service	TRUE	FALSE	FALSE	40 CFR 61 Subpart L	UNCLASSIFIED	24-Oct-16	23-Nov-16	ARAN PARKER
COKE	R361J	Valve	Externally Actuated	Light Liquid	Accessible	FALSE	1186	1" VALVES EAST TAR DECANTER BOTTOM W/21WC & 96SC	03	1	Yes, equipment can be isolated from service	TRUE	FALSE	FALSE	40 CFR 61 Subpart L	UNCLASSIFIED	24-Oct-16	23-Nov-16	ARAN PARKER
COKE	R361K	Valve	Externally Actuated	Light Liquid	Accessible	FALSE	1187	1" VALVES EAST TAR DECANTER BOTTOM W/21WC & 96SC	03	1	Yes, equipment can be isolated from service	TRUE	FALSE	FALSE	40 CFR 61 Subpart L	UNCLASSIFIED	24-Oct-16	23-Nov-16	ARAN PARKER
COKE	R361L	Valve	Externally Actuated	Light Liquid	Accessible	FALSE	1188	½" VALVES EAST TAR DECANTER BOTTOM W/21WC & 96SC	03	1	Yes, equipment can be isolated from service	TRUE	FALSE	FALSE	40 CFR 61 Subpart L	UNCLASSIFIED	24-Oct-16	23-Nov-16	ARAN PARKER
COKE	R361M	Valve	Externally Actuated	Light Liquid	Accessible	FALSE	1189	½" VALVES EAST TAR DECANTER BOTTOM W/21WC & 96SC	03	1	Yes, equipment can be isolated from service	TRUE	FALSE	FALSE	40 CFR 61 Subpart L	UNCLASSIFIED	24-Oct-16	23-Nov-16	ARAN PARKER
COKE	R362	Valve	Externally Actuated	Light Liquid	Accessible	FALSE	1163	(13) 1" & ½" VALVES WEST TAR DECANTER BOTTOM W/15WC & 90SC	03	1	Yes, equipment can be isolated from service	TRUE	FALSE	FALSE	40 CFR 61 Subpart L	UNCLASSIFIED	24-Oct-16	23-Nov-16	ARAN PARKER
COKE	R362A	Valve	Externally Actuated	Light Liquid	Accessible	FALSE	1190	1" VALVES WEST TAR DECANTER BOTTOM W/15WC & 90SC	03	1	Yes, equipment can be isolated from service	TRUE	FALSE	FALSE	40 CFR 61 Subpart L	UNCLASSIFIED	24-Oct-16	23-Nov-16	ARAN PARKER
COKE	R362B	Valve	Externally Actuated	Light Liquid	Accessible	FALSE	1164	1" VALVES WEST TAR DECANTER BOTTOM W/15WC & 90SC	01	1	Yes, equipment can be isolated from service	TRUE	FALSE	FALSE	40 CFR 61 Subpart L	UNCLASSIFIED	24-Oct-16	23-Nov-16	ARAN PARKER
COKE	R362C	Valve	Externally Actuated	Light Liquid	Accessible	FALSE	1165	1" VALVES WEST TAR DECANTER BOTTOM W/15WC & 90SC	03	1	Yes, equipment can be isolated from service	TRUE	FALSE	FALSE	40 CFR 61 Subpart L	UNCLASSIFIED	24-Oct-16	23-Nov-16	ARAN PARKER
COKE	R362D	Valve	Externally Actuated	Light Liquid	Accessible	FALSE	1166	1" VALVES WEST TAR DECANTER BOTTOM W/15WC & 90SC	03	1	Yes, equipment can be isolated from service	TRUE	FALSE	FALSE	40 CFR 61 Subpart L	UNCLASSIFIED	24-Oct-16	23-Nov-16	ARAN PARKER
COKE	R362E	Valve	Externally Actuated	Light Liquid	Accessible	FALSE	1167	1" VALVES WEST TAR DECANTER BOTTOM W/15WC & 90SC	03	1	Yes, equipment can be isolated from service	TRUE	FALSE	FALSE	40 CFR 61 Subpart L	UNCLASSIFIED	24-Oct-16	23-Nov-16	ARAN PARKER
COKE	R362F	Valve	Externally Actuated	Light Liquid	Accessible	FALSE	1168	1" VALVES WEST TAR DECANTER BOTTOM W/15WC & 90SC	03	1	Yes, equipment can be isolated from service	TRUE	FALSE	FALSE	40 CFR 61 Subpart L	UNCLASSIFIED	24-Oct-16	23-Nov-16	ARAN PARKER
COKE	R362G	Valve	Externally Actuated	Light Liquid	Accessible	FALSE	1169	1" VALVES WEST TAR DECANTER BOTTOM W/15WC & 90SC	03	1	Yes, equipment can be isolated from service	TRUE	FALSE	FALSE	40 CFR 61 Subpart L	UNCLASSIFIED	24-Oct-16	23-Nov-16	ARAN PARKER
COKE	R362H	Valve	Externally Actuated	Light Liquid	Accessible	FALSE	1170	1" VALVES WEST TAR DECANTER BOTTOM W/15WC & 90SC	03	1	Yes, equipment can be isolated from service	TRUE	FALSE	FALSE	40 CFR 61 Subpart L	UNCLASSIFIED	24-Oct-16	23-Nov-16	ARAN PARKER
COKE	R362I	Valve	Externally Actuated	Light Liquid	Accessible	FALSE	1171	1" VALVES WEST TAR DECANTER BOTTOM W/15WC & 90SC	03	1	Yes, equipment can be isolated from service	TRUE	FALSE	FALSE	40 CFR 61 Subpart L	UNCLASSIFIED	24-Oct-16	23-Nov-16	ARAN PARKER
COKE	R362J	Valve	Externally Actuated	Light Liquid	Accessible	FALSE	1172	1" VALVES WEST TAR DECANTER BOTTOM W/15WC & 90SC	03	1	Yes, equipment can be isolated from service	TRUE	FALSE	FALSE	40 CFR 61 Subpart L	UNCLASSIFIED	24-Oct-16	23-Nov-16	ARAN PARKER
COKE	R362K	Valve	Externally Actuated	Light Liquid	Accessible	FALSE	1173	1" VALVES WEST TAR DECANTER BOTTOM W/15WC & 90SC	03	1	Yes, equipment can be isolated from service	TRUE	FALSE	FALSE	40 CFR 61 Subpart L	UNCLASSIFIED	24-Oct-16	23-Nov-16	ARAN PARKER
COKE	R362L	Valve	Externally Actuated	Light Liquid	Accessible	FALSE	1174	1" VALVES WEST TAR DECANTER BOTTOM W/15WC & 90SC	03	1	Yes, equipment can be isolated from service	TRUE	FALSE	FALSE	40 CFR 61 Subpart L	UNCLASSIFIED	24-Oct-16	23-Nov-16	ARAN PARKER
COKE	R362M	Valve	Externally Actuated	Light Liquid	Accessible	FALSE	1175	½" VALVES WEST TAR DECANTER BOTTOM W/15WC & 90SC	03	0.5	Yes, equipment can be isolated from service	TRUE	FALSE	FALSE	40 CFR 61 Subpart L	UNCLASSIFIED	24-Oct-16	23-Nov-16	ARAN PARKER
COKE	R363	Valve	Externally Actuated	Light Liquid	Accessible	FALSE	1162	3" VALVE WEST TAR DECANTER BOTTOM W/1FL	01	3	Yes, equipment can be isolated from service	TRUE	FALSE	FALSE	40 CFR 61 Subpart L	UNCLASSIFIED	24-Oct-16	23-Nov-16	ARAN PARKER
COKE	R364	Valve	Externally Actuated	Light Liquid	Accessible	FALSE	1197	6" VALVE WEST TAR DECANTER BOTTOM W/2FL & 2WC	02	6	Yes, equipment can be isolated from service	TRUE	FALSE	FALSE	40 CFR 61 Subpart L	UNCLASSIFIED	24-Oct-16	23-Nov-16	ARAN PARKER
COKE	R365	Valve	Externally Actuated	Light Liquid	Accessible	FALSE	1196	4" VALVE WEST TAR DECANTER BOTTOM	03	4	Yes, equipment can be isolated from service	TRUE	FALSE	FALSE	40 CFR 61 Subpart L	UNCLASSIFIED	24-Oct-16	23-Nov-16	ARAN PARKER
COKE	R366	Valve	Externally Actuated	Light Liquid	Accessible	FALSE	1194	4" & 1" VALVES WEST TAR DECANTER BOTTOM W/3FL, 2WC & 4SC	03	4	Yes, equipment can be isolated from service	TRUE	FALSE	FALSE	40 CFR 61 Subpart L	UNCLASSIFIED	24-Oct-16	23-Nov-16	ARAN PARKER
COKE	R366A	Valve	Externally Actuated	Light Liquid	Accessible	FALSE	1195	1" VALVES WEST TAR DECANTER BOTTOM W/3FL, 2WC & 4SC	03	1	Yes, equipment can be isolated from service	TRUE	FALSE	FALSE	40 CFR 61 Subpart L	UNCLASSIFIED	24-Oct-16	23-Nov-16	ARAN PARKER
COKE	R367	Valve	Externally Actuated	Light Liquid	Accessible	FALSE	1193	4" VALVE WEST TAR DECANTER BOTTOM W/2FL	04	4	Yes, equipment can be isolated from service	TRUE	FALSE	FALSE	40 CFR 61 Subpart L	UNCLASSIFIED	24-Oct-16	23-Nov-16	ARAN PARKER
COKE	R368	Valve	Externally Actuated	Light Liquid	Accessible	FALSE	1231	20" VALVE WEST TAR DECANTER TO FLUSHING LIQUOR W/4FL & 3WC	1P4	20	Yes, equipment can be isolated from service	TRUE	FALSE	FALSE	40 CFR 61 Subpart L	UNCLASSIFIED	24-Oct-16	23-Nov-16	ARAN PARKER
COKE	R369	Valve	Externally Actuated	Light Liquid	Accessible	FALSE	1217	20" VALVE EAST TAR DECANTER TO FLUSHING LIQUOR W/5FL & 9WC	1P4	20	Yes, equipment can be isolated from service	TRUE	FALSE	FALSE	40 CFR 61 Subpart L	UNCLASSIFIED	24-Oct-16	23-Nov-16	ARAN PARKER
COKE	R37	Valve	Externally Actuated	Light Liquid	Accessible	FALSE	284	1" VALVE PROCESS WATER COOLING TOWER INLET W/1FL, 3WC & 8SC	010	1	Yes, equipment can be isolated from service	TRUE	FALSE	FALSE	40 CFR 61 Subpart L	UNCLASSIFIED	24-Oct-16	23-Nov-16	ARAN PARKER
COKE	R370	Valve	Externally Actuated	Light Liquid	Accessible	FALSE	1278	8" VALVE INTO WEST TAR LOADING PUMP W/1WC	00	8	Yes, equipment can be isolated from service	TRUE	FALSE	FALSE	40 CFR 61 Subpart L	UNCLASSIFIED	24-Oct-16	23-Nov-16	ARAN PARKER
COKE	R371	Valve	Externally Actuated	Light Liquid	Accessible	FALSE	1279	8" & 1" VALVES INTO WEST TAR LOADING PUMP W/2FL, 2WC & 2SC	01	8	Yes, equipment can be isolated from service	TRUE	FALSE	FALSE	40 CFR 61 Subpart L	UNCLASSIFIED	24-Oct-16	23-Nov-16	ARAN PARKER
COKE	R371A	Valve	Externally Actuated	Light Liquid	Accessible	FALSE	1280	1" VALVES INTO WEST TAR LOADING PUMP W/2FL, 2WC & 2SC	01	0.8	Yes, equipment can be isolated from service	TRUE	FALSE	FALSE	40 CFR 61 Subpart L	UNCLASSIFIED	24-Oct-16	23-Nov-16	ARAN PARKER
COKE	R372	Valve	Externally Actuated	Light Liquid	Accessible	FALSE	1358	8" VALVE @ TAR LOADING PUMPS W/2FL & 2WC	02	8	Yes, equipment can be isolated from service	TRUE	FALSE	FALSE	40 CFR 61 Subpart L	UNCLASSIFIED	24-Oct-16	23-Nov-16	ARAN PARKER
COKE	R373	Valve	Externally Actuated	Light Liquid	Accessible	FALSE	1357	8" VALVE INTO EAST TAR LOADING PUMP W/1WC	02	8	Yes, equipment can be isolated from service	TRUE	FALSE	FALSE	40 CFR 61 Subpart L	UNCLASSIFIED	24-Oct-16	23-Nov-16	ARAN PARKER
COKE	R374	Pump	Standard Service	Light Liquid	Accessible	FALSE	1281	EAST TAR LOADING PUMP	00	0	Yes, equipment can be isolated from service	TRUE	FALSE	FALSE	40 CFR 61 Subpart L	UNCLASSIFIED	24-Oct-16	23-Nov-16	ARAN PARKER
COKE	R375	Valve	Externally Actuated	Light Liquid	Accessible	FALSE	1282	6" VALVE & CHECK VALVE FROM EAST TAR LOADING PUMP W/3FL & 3W	04	6	Yes, equipment can be isolated from service	TRUE	FALSE	FALSE	40 CFR 61 Subpart L	UNCLASSIFIED	24-Oct-16	23-Nov-16	ARAN PARKER
COKE	R376	Valve	Externally Actuated	Light Liquid	Accessible	FALSE	1301	6" & 1" VALVES @ EAST TAR LOADING PUMP W/2SC	04	6	Yes, equipment can be isolated from service	TRUE	FALSE	FALSE	40 CFR 61 Subpart L	UNCLASSIFIED	24-Oct-16	23-Nov-16	ARAN PARKER
COKE	R376A	Valve	Externally Actuated	Light Liquid	Accessible	FALSE	1302	1" VALVES @ EAST TAR LOADING PUMP W/2SC	04	1	Yes, equipment can be isolated from service	TRUE	FALSE	FALSE	40 CFR 61 Subpart L	UNCLASSIFIED	24-Oct-16	23-Nov-16	ARAN PARKER
COKE	R377	Valve	Externally Actuated	Light Liquid	Accessible	FALSE	1356	8" & (2) 1" VALVES @ TAR LOADING PUMPS W/9SC	02	8	Yes, equipment can be isolated from service	TRUE	FALSE	FALSE	40 CFR 61 Subpart L	UNCLASSIFIED	24-Oct-16	23-Nov-16	ARAN PARKER
COKE	R378	Valve	Externally Actuated	Light Liquid	Accessible	FALSE	1304	6" VALVE TAR LOADING LINE	03	6	Yes, equipment can be isolated from service	TRUE	FALSE	FALSE	40 CFR 61 Subpart L	UNCLASSIFIED	24-Oct-16	23-Nov-16	ARAN PARKER
COKE	R379	Valve	Externally Actuated	Light Liquid	Accessible	FALSE	1303	6" VALVE TAR LOADING LINE	04	6	Yes, equipment can be isolated from service	TRUE	FALSE	FALSE	40 CFR 61 Subpart L	UNCLASSIFIED	24-Oct-16	23-Nov-16	ARAN PARKER
COKE	R38	Valve	Externally Actuated	Light Liquid	Accessible	FALSE	285	1" VALVE PROCESS WATER COOLING TOWER INLET W/2WC & 8SC	010	1	Yes, equipment can be isolated from service	TRUE	FALSE	FALSE	40 CFR 61 Subpart L	UNCLASSIFIED	24-Oct-16	23-Nov-16	ARAN PARKER
COKE	R380	Valve	Externally Actuated	Light Liquid	Accessible	FALSE	1305	6" VALVE TAR LOADING LINE	04	6	Yes, equipment can be isolated from service	TRUE	FALSE	FALSE	40 CFR 61 Subpart L	UNCLASSIFIED	24-Oct-16	23-Nov-16	ARAN PARKER
COKE	R381	Valve	Externally Actuated	Light Liquid	Accessible	FALSE	1284	3" VALVE & CHECK VALVE & ½" VALVE @ TAR LOADING PUMPS W/4FL	02	3	Yes, equipment can be isolated from service	TRUE	FALSE	FALSE	40 CFR 61 Subpart L	UNCLASSIFIED	24-Oct-16	23-Nov-16	ARAN PARKER
COKE	R381A	Valve	Externally Actuated	Light Liquid	Accessible	FALSE	1285	3" CHECK VALVE @ TAR LOADING PUMPS W/4FL & 7SC	02	3	Yes, equipment can be isolated from service	TRUE	FALSE	FALSE	40 CFR 61 Subpart L	UNCLASSIFIED	24-Oct-16	23-Nov-16	Matt Case
COKE	R381B	Valve	Externally Actuated	Light Liquid	Accessible	FALSE	1286	½" VALVE @ TAR LOADING PUMPS W/4FL & 7SC	02	0.5	Yes, equipment can be isolated from service	TRUE	FALSE	FALSE	40 CFR 61 Subpart L	UNCLASSIFIED	24-Oct-16	23-Nov-16	ARAN PARKER
COKE	R382	Valve	Externally Actuated	Light Liquid	Accessible	FALSE	1287	3" VALVE & CHECK VALVE & ½" VALVE @ TAR LOADING PUMPS W/4FL	02	3	Yes, equipment can be isolated from service	TRUE	FALSE	FALSE	40 CFR 61 Subpart L	UNCLASSIFIED	24-Oct-16	23-Nov-16	ARAN PARKER
COKE	R383	Valve	Externally Actuated	Light Liquid	Accessible	FALSE	1283	6" VALVE @ TAR LOADING PUMPS W/3FL & 5WC	02	6	Yes, equipment can be isolated from service	TRUE	FALSE	FALSE	40 CFR 61 Subpart L	UNCLASSIFIED	24-Oct-16	23-Nov-16	ARAN PARKER
COKE	R384	Valve	Externally Actuated	Light Liquid	Accessible	FALSE	1299	6" VALVE @ TAR LOADING PUMPS W/2FL & 1WC	02	6	Yes, equipment can be isolated from service	TRUE	FALSE	FALSE	40 CFR 61 Subpart L	UNCLASSIFIED	24-Oct-16	23-Nov-16	ARAN PARKER
COKE	R385	Valve	Externally Actuated	Light Liquid	Accessible	FALSE	1300	2" VALVE TAR TO FINAL COOLER PUMP INLET W/2FL & 6SC	03	2	Yes, equipment can be isolated from service	TRUE	FALSE	FALSE	40 CFR 61 Subpart L	UNCLASSIFIED	24-Oct-16	23-Nov-16	ARAN PARKER
COKE	R386	Pump	Standard Service	Light Liquid	Accessible	FALSE	1288	TAR TO FINAL COOLER PUMP (WEST)	00	0	Yes, equipment can be isolated from service	TRUE	FALSE	FALSE	40 CFR 61 Subpart L	UNCLASSIFIED	24-Oct-16	23-Nov-16	ARAN PARKER
COKE	R387	Valve	Externally Actuated	Light Liquid	Accessible	FALSE	1295	(2) 2" & CHECK VALVES & ½" VALVE WEST TAR PUMP OUTLET W/4FL,	04	2	Yes, equipment can be isolated from service	TRUE	FALSE	FALSE	40 CFR 61 Subpart L	UNCLASSIFIED	24-Oct-16	23-Nov-16	ARAN PARKER
COKE	R387A	Valve	Externally Actuated	Light Liquid	Accessible	FALSE	1296	2" & CHECK VALVES WEST TAR PUMP OUTLET W/4FL, 2WC & 5SC	04	2	Yes, equipment can be isolated from service	TRUE	FALSE	FALSE	40 CFR 61 Subpart L	UNCLASSIFIED	24-Oct-16	23-Nov-16	ARAN PARKER
COKE	R387B	Valve	Externally Actuated	Light Liquid	Accessible	FALSE	1297	½" VALVE WEST TAR PUMP OUTLET W/4FL, 2WC & 5SC	04	0.5	Yes, equipment can be isolated from service	TRUE	FALSE	FALSE	40 CFR 61 Subpart L	UNCLASSIFIED	24-Oct-16	23-Nov-16	Matt Case
COKE	R388	Valve	Externally Actuated	Light Liquid	Accessible	FALSE	1298	2" VALVE TAR PUMP INLET W/2FL & 3SC	03	2	Yes, equipment can be isolated from service	TRUE	FALSE	FALSE	40 CFR 61 Subpart L	UNCLASSIFIED	24-Oct-16	23-Nov-16	ARAN PARKER
COKE	R389	Pump	Standard Service	Light Liquid	Accessible	FALSE	1289	TAR TO FINAL COOLER PUMP (EAST)	00	0	Yes, equipment can be isolated from service	TRUE	FALSE	FALSE	40 CFR 61 Subpart L	UNCLASSIFIED	24-Oct-16	23-Nov-16	ARAN PARKER
COKE	R39	Valve	Externally Actuated	Light Liquid	Accessible	FALSE	287	1" VALVE PROCESS WATER COOLING TOWER INLET W/2WC & 8SC	010	1	Yes, equipment can be isolated from service	TRUE	FALSE	FALSE	40 CFR 61 Subpart L	UNCLASSIFIED	24-Oct-16	23-Nov-16	ARAN PARKER
COKE	R390	Valve	Externally Actuated	Light Liquid	Accessible	FALSE	1290	2" VALVE & CHECK VALVE, ¾" & (2) ½" VALVES EAST TAR PUMP OUT	02	2	Yes, equipment can be isolated from service	TRUE	FALSE	FALSE	40 CFR 61 Subpart L	UNCLASSIFIED	24-Oct-16	23-Nov-16	ARAN PARKER
COKE	R390A	Valve	Externally Actuated	Light Liquid	Accessible	FALSE	1291	2" CHECK VALVE EAST TAR PUMP OUT. W/4FL, 4WC & 1SC	02	2	Yes, equipment can be isolated from service	TRUE	FALSE	FALSE	40 CFR 61 Subpart L	UNCLASSIFIED	24-Oct-16	23-Nov-16	ARAN PARKER
COKE	R390B	Valve	Externally Actuated	Light Liquid	Accessible	FALSE	1292	¾" VALVES EAST TAR PUMP OUT. W/4FL, 4WC & 1SC	02	0.8	Yes, equipment can be isolated from service	TRUE	FALSE	FALSE	40 CFR 61 Subpart L	UNCLASSIFIED	24-Oct-16	23-Nov-16	ARAN PARKER
COKE	R390C	Valve	Externally Actuated	Light Liquid	Accessible	FALSE	1293	½" VALVES EAST TAR PUMP OUT. W/4FL, 4WC & 1SC	02	0.5	Yes, equipment can be isolated from service	TRUE	FALSE	FALSE	40 CFR 61 Subpart L	UNCLASSIFIED	24-Oct-16	23-Nov-16	ARAN PARKER
COKE	R390E	Valve	Externally Actuated	Light Liquid	Accessible	FALSE	1294	½" VALVES EAST TAR PUMP OUT. W/4FL, 4WC & 1SC	03	0.5	Yes, equipment can be isolated from service	TRUE	FALSE	FALSE	40 CFR 61 Subpart L	UNCLASSIFIED	24-Oct-16	23-Nov-16	ARAN PARKER
COKE	R391	Valve	Externally Actuated	Light Liquid	Accessible	FALSE	541	3" & ¾" VALVES WEST TAR TANK BOTTOM W/2FL & 3SC	02	3	Yes, equipment can be isolated from service	TRUE	FALSE	FALSE	40 CFR 61 Subpart L	UNCLASSIFIED	24-Oct-16	23-Nov-16	ARAN PARKER
COKE	R391A	Valve	Externally Actuated	Light Liquid	Accessible	FALSE	1324	¾" VALVES WEST TAR TANK BOTTOM W/2FL & 3SC	02	0.8	Yes, equipment can be isolated from service	TRUE	FALSE	FALSE	40 CFR 61 Subpart L	UNCLASSIFIED	24-Oct-16	23-Nov-16	ARAN PARKER
COKE	R392	Flange	Standard Service	Light Liquid	Accessible	FALSE	1325	MANHOLE WEST TAR TANK BOTTOM W/1FL	01	36	Yes, equipment can be isolated from service	TRUE	FALSE	FALSE	40 CFR 61 Subpart L	UNCLASSIFIED	24-Oct-16	23-Nov-16	ARAN PARKER
COKE	R393	Valve	Externally Actuated	Light Liquid	Accessible	FALSE	1326	3" & ¾" VALVES WEST TAR TANK BOTTOM W/4FL, 8WC & 15SC	01	3	Yes, equipment can be isolated from service	TRUE	FALSE	FALSE	40 CFR 61 Subpart L	UNCLASSIFIED	24-Oct-16	23-Nov-16	ARAN PARKER
COKE	R393A	Valve	Externally Actuated	Light Liquid	Accessible	FALSE	1327	¾" VALVES WEST TAR TANK BOTTOM W/4FL, 8WC & 15SC	02	0.8	Yes, equipment can be isolated from service	TRUE	FALSE	FALSE	40 CFR 61 Subpart L	UNCLASSIFIED	24-Oct-16	23-Nov-16	ARAN PARKER
COKE	R394	Valve	Externally Actuated	Light Liquid	Accessible	FALSE	1328	3" & (2) ¾" VALVES WEST TAR TANK BOTTOM W/3FL, 2WC & 4SC	00	3	Yes, equipment can be isolated from service	TRUE	FALSE	FALSE	40 CFR 61 Subpart L	UNCLASSIFIED	24-Oct-16	23-Nov-16	ARAN PARKER
COKE	R394A	Valve	Externally Actuated	Light Liquid	Accessible	FALSE	1329	¾" VALVES WEST TAR TANK BOTTOM W/3FL, 2WC & 4SC	02	0.8	Yes, equipment can be isolated from service	TRUE	FALSE	FALSE	40 CFR 61 Subpart L	UNCLASSIFIED	24-Oct-16	23-Nov-16	ARAN PARKER
COKE	R394B	Valve	Externally Actuated	Light Liquid	Accessible	FALSE	1330	¾" VALVES WEST TAR TANK BOTTOM W/3FL, 2WC & 4SC	02	0.8	Yes, equipment can be isolated from service	TRUE	FALSE	FALSE	40 CFR 61 Subpart L	UNCLASSIFIED	24-Oct-16	23-Nov-16	ARAN PARKER
COKE	R395	Valve	Externally Actuated	Light Liquid	Accessible	FALSE	1331	3", 1" & ½" VALVES WEST TAR TANK BOTTOM W/1FL & 7SC	02	3	Yes, equipment can be isolated from service	TRUE	FALSE	FALSE	40 CFR 61 Subpart L	UNCLASSIFIED	24-Oct-16	23-Nov-16	ARAN PARKER
COKE	R395A	Valve	Externally Actuated	Light Liquid	Accessible	FALSE	1332	1" VALVES WEST TAR TANK BOTTOM W/1FL & 7SC	02	1	Yes, equipment can be isolated from service	TRUE	FALSE	FALSE	40 CFR 61 Subpart L	UNCLASSIFIED	24-Oct-16	23-Nov-16	ARAN PARKER
COKE	R395B	Valve	Externally Actuated	Light Liquid	Accessible	FALSE	1333	½" VALVES WEST TAR TANK BOTTOM W/1FL & 7SC	02	0.5	Yes, equipment can be isolated from service	TRUE	FALSE	FALSE	40 CFR 61 Subpart L	UNCLASSIFIED	24-Oct-16	23-Nov-16	ARAN PARKER
COKE	R396	Valve	Externally Actuated	Light Liquid	Accessible	FALSE	1334	3", 1" & ½" VALVES WEST TAR TANK BOTTOM W/7SC	02	3	Yes, equipment can be isolated from service	TRUE	FALSE	FALSE	40 CFR 61 Subpart L	UNCLASSIFIED	24-Oct-16	23-Nov-16	ARAN PARKER

UNIT_CODE	TAG_ NUMBER	EQUITYPE_DESC	CONFIG_DESC	SERVICE_DESC	ACCESS_DESC	CLOSED_VENT _SYSTEM	ROUTE	LOCATION	LEVEL	SIZE	IFSTYPE_DESC	ATTEMPT_A LLOWED	UNDER_300_H OURS_SERVIC E	POTENTIAL_ OPEN_END	GROUP_DESC	PRODUCT_DESC	DATE_ADDED	DATE_IN_SERVICE	TECH_DESC
COKE	R396A	Valve	Externally Actuated	Light Liquid	Accessible	FALSE	1335	1" VALVES WEST TAR TANK BOTTOM W/7SC	02	1	Yes, equipment can be isolated from service	TRUE	FALSE	FALSE	40 CFR 61 Subpart L	UNCLASSIFIED	24-Oct-16	23-Nov-16	ARAN PARKER
COKE	R396B	Valve	Externally Actuated	Light Liquid	Accessible	FALSE	1336	½" VALVES WEST TAR TANK BOTTOM W/7SC	02	0.5	Yes, equipment can be isolated from service	TRUE	FALSE	FALSE	40 CFR 61 Subpart L	UNCLASSIFIED	24-Oct-16	23-Nov-16	ARAN PARKER
COKE	R397	Valve	Externally Actuated	Light Liquid	Accessible	FALSE	1337	3", 1" & ½" VALVES WEST TAR TANK BOTTOM W/7SC	03	3	Yes, equipment can be isolated from service	TRUE	FALSE	FALSE	40 CFR 61 Subpart L	UNCLASSIFIED	24-Oct-16	23-Nov-16	ARAN PARKER
COKE	R397A	Valve	Externally Actuated	Light Liquid	Accessible	FALSE	1338	1" VALVES WEST TAR TANK BOTTOM W/7SC	02	1	Yes, equipment can be isolated from service	TRUE	FALSE	FALSE	40 CFR 61 Subpart L	UNCLASSIFIED	24-Oct-16	23-Nov-16	ARAN PARKER
COKE	R397B	Valve	Externally Actuated	Light Liquid	Accessible	FALSE	1339	½" VALVES WEST TAR TANK BOTTOM W/7SC	02	0.5	Yes, equipment can be isolated from service	TRUE	FALSE	FALSE	40 CFR 61 Subpart L	UNCLASSIFIED	24-Oct-16	23-Nov-16	ARAN PARKER
COKE	R398	Valve	Externally Actuated	Light Liquid	Accessible	FALSE	1355	3" VALVE WEST TAR TANK BOTTOM W/2FL	03	3	Yes, equipment can be isolated from service	TRUE	FALSE	FALSE	40 CFR 61 Subpart L	UNCLASSIFIED	24-Oct-16	23-Nov-16	ARAN PARKER
COKE	R399	Valve	Externally Actuated	Light Liquid	Accessible	FALSE	1308	8" VALVE WEST TAR TANK BOTTOM	03	8	Yes, equipment can be isolated from service	TRUE	FALSE	FALSE	40 CFR 61 Subpart L	UNCLASSIFIED	24-Oct-16	23-Nov-16	ARAN PARKER
COKE	R4	Valve	Externally Actuated	Light Liquid	Accessible	FALSE	1395	(5) 1 1/2"VALVES & 50SC EAST TAR TANK	30	1.5	Yes, equipment can be isolated from service	TRUE	FALSE	FALSE	40 CFR 61 Subpart L	UNCLASSIFIED	24-Oct-16	23-Nov-16	Andrew Fisher
COKE	R40	Valve	Externally Actuated	Light Liquid	Accessible	FALSE	288	1' VALVE PROCESS WATER COOLING TOWER INLET W/2WC & 8SC	011	1	Yes, equipment can be isolated from service	TRUE	FALSE	FALSE	40 CFR 61 Subpart L	UNCLASSIFIED	24-Oct-16	23-Nov-16	ARAN PARKER
COKE	R400	Valve	Externally Actuated	Light Liquid	Accessible	FALSE	1307	6" VALVE @ WEST TAR TANK BOTTOM W/3FL	03	6	Yes, equipment can be isolated from service	TRUE	FALSE	FALSE	40 CFR 61 Subpart L	UNCLASSIFIED	24-Oct-16	23-Nov-16	ARAN PARKER
COKE	R401	Valve	Externally Actuated	Light Liquid	Accessible	FALSE	1272	1" VALVE @ EAST TAR TANK BOTTOM (NORTH SIDE)	02	1	Yes, equipment can be isolated from service	TRUE	FALSE	FALSE	40 CFR 61 Subpart L	UNCLASSIFIED	24-Oct-16	23-Nov-16	ARAN PARKER
COKE	R402	Flange	Standard Service	Light Liquid	Accessible	FALSE	1274	MANHOLE EAST TAR TANK BOTTOM W/1FL & 1WC (NORTH SIDE)	01	36	Yes, equipment can be isolated from service	TRUE	FALSE	FALSE	40 CFR 61 Subpart L	UNCLASSIFIED	24-Oct-16	23-Nov-16	ARAN PARKER
COKE	R403	Valve	Externally Actuated	Light Liquid	Accessible	FALSE	1273	3" VALVE EAST TAR TANK BOTTOM (NORTH SIDE)	02	3	Yes, equipment can be isolated from service	TRUE	FALSE	FALSE	40 CFR 61 Subpart L	UNCLASSIFIED	24-Oct-16	23-Nov-16	ARAN PARKER
COKE	R404	Valve	Externally Actuated	Light Liquid	Accessible	FALSE	1271	1" VALVE EAST TAR TANK BOTTOM W/2SC (NORTH SIDE)	02	1	Yes, equipment can be isolated from service	TRUE	FALSE	FALSE	40 CFR 61 Subpart L	UNCLASSIFIED	24-Oct-16	23-Nov-16	ARAN PARKER
COKE	R405	Flange	Standard Service	Light Liquid	Accessible	FALSE	1270	1" VALVE EAST TAR TANK BOTTOM W/2SC (NORTH SIDE)	01	1	Yes, equipment can be isolated from service	TRUE	FALSE	FALSE	40 CFR 61 Subpart L	UNCLASSIFIED	24-Oct-16	23-Nov-16	ARAN PARKER
COKE	R406	Valve	Externally Actuated	Light Liquid	Accessible	FALSE	1269	3" VALVE EAST TAR TANK BOTTOM W/1FL & 1WC (NORTH SIDE)	02	3	Yes, equipment can be isolated from service	TRUE	FALSE	FALSE	40 CFR 61 Subpart L	UNCLASSIFIED	24-Oct-16	23-Nov-16	ARAN PARKER
COKE	R407	Valve	Externally Actuated	Light Liquid	Accessible	FALSE	1364	3" & ½" VALVES EAST TAR TANK BOTTOM W/4SC	03	3	Yes, equipment can be isolated from service	TRUE	FALSE	FALSE	40 CFR 61 Subpart L	UNCLASSIFIED	24-Oct-16	23-Nov-16	ARAN PARKER
COKE	R407A	Valve	Externally Actuated	Light Liquid	Accessible	FALSE	1365	½" VALVES EAST TAR TANK BOTTOM W/4SC	02	0.5	Yes, equipment can be isolated from service	TRUE	FALSE	FALSE	40 CFR 61 Subpart L	UNCLASSIFIED	24-Oct-16	23-Nov-16	ARAN PARKER
COKE	R408	Valve	Externally Actuated	Light Liquid	Accessible	FALSE	949	1" VALVE EAST TAR TANK BOTTOM W/2SC (NORTH SIDE)	01	1	Yes, equipment can be isolated from service	TRUE	FALSE	FALSE	40 CFR 61 Subpart L	UNCLASSIFIED	24-Oct-16	23-Nov-16	ARAN PARKER
COKE	R409	Valve	Externally Actuated	Light Liquid	Accessible	FALSE	1361	2", ¾" & ½" VALVES & GAUGE EAST TAR TANK BOTTOM W/2FL, 3WC &	02	2	Yes, equipment can be isolated from service	TRUE	FALSE	FALSE	40 CFR 61 Subpart L	UNCLASSIFIED	24-Oct-16	23-Nov-16	ARAN PARKER
COKE	R409A	Valve	Externally Actuated	Light Liquid	Accessible	FALSE	1362	¾" VALVES & GAUGE EAST TAR TANK BOTTOM W/2FL, 3WC & 5SC	02	0.8	Yes, equipment can be isolated from service	TRUE	FALSE	FALSE	40 CFR 61 Subpart L	UNCLASSIFIED	24-Oct-16	23-Nov-16	ARAN PARKER
COKE	R409B	Valve	Externally Actuated	Light Liquid	Accessible	FALSE	1363	½" VALVES & GAUGE EAST TAR TANK BOTTOM W/2FL, 3WC & 5SC	02	0.5	Yes, equipment can be isolated from service	TRUE	FALSE	FALSE	40 CFR 61 Subpart L	UNCLASSIFIED	24-Oct-16	23-Nov-16	ARAN PARKER
COKE	R41	Valve	Externally Actuated	Light Liquid	Accessible	FALSE	289	1" VALVE PROCESS WATER COOLING TOWER INLET W/2WC & 8SC	09	1	Yes, equipment can be isolated from service	TRUE	FALSE	FALSE	40 CFR 61 Subpart L	UNCLASSIFIED	24-Oct-16	23-Nov-16	ARAN PARKER
COKE	R410	Valve	Externally Actuated	Light Liquid	Accessible	FALSE	1359	(2) 1.5" VALVES EAST TAR TANK BOTTOM W/12SC	02	1.5	Yes, equipment can be isolated from service	TRUE	FALSE	FALSE	40 CFR 61 Subpart L	UNCLASSIFIED	24-Oct-16	23-Nov-16	ARAN PARKER
COKE	R410A	Valve	Externally Actuated	Light Liquid	Accessible	FALSE	1360	1.5" VALVES EAST TAR TANK BOTTOM W/12SC	02	1.5	Yes, equipment can be isolated from service	TRUE	FALSE	FALSE	40 CFR 61 Subpart L	UNCLASSIFIED	24-Oct-16	23-Nov-16	ARAN PARKER
COKE	R411	Valve	Externally Actuated	Light Liquid	Accessible	FALSE	1347	1" VALVE EAST TAR TANK BOTTOM W/5SC	02	1	Yes, equipment can be isolated from service	TRUE	FALSE	FALSE	40 CFR 61 Subpart L	UNCLASSIFIED	24-Oct-16	23-Nov-16	ARAN PARKER
COKE	R412	Valve	Externally Actuated	Light Liquid	Accessible	FALSE	1345	2" & ½" VALVES & GAUGE EAST TAR TANK BOTTOM W/4SC	00	2	Yes, equipment can be isolated from service	TRUE	FALSE	FALSE	40 CFR 61 Subpart L	UNCLASSIFIED	24-Oct-16	23-Nov-16	ARAN PARKER
COKE	R412A	Valve	Externally Actuated	Light Liquid	Accessible	FALSE	1346	½" VALVES & GAUGE EAST TAR TANK BOTTOM W/4SC	01	0.5	Yes, equipment can be isolated from service	TRUE	FALSE	FALSE	40 CFR 61 Subpart L	UNCLASSIFIED	24-Oct-16	23-Nov-16	ARAN PARKER
COKE	R413	Valve	Externally Actuated	Light Liquid	Accessible	FALSE	1342	6" & (2) ¾" VALVES @ TAR TANKS W/2FL, 2WC & 4SC	02	6	Yes, equipment can be isolated from service	TRUE	FALSE	FALSE	40 CFR 61 Subpart L	UNCLASSIFIED	24-Oct-16	23-Nov-16	ARAN PARKER
COKE	R413A	Valve	Externally Actuated	Light Liquid	Accessible	FALSE	1343	¾" VALVES @ TAR TANKS W/2FL, 2WC & 4SC	02	0.8	Yes, equipment can be isolated from service	TRUE	FALSE	FALSE	40 CFR 61 Subpart L	UNCLASSIFIED	24-Oct-16	23-Nov-16	ARAN PARKER
COKE	R413B	Valve	Externally Actuated	Light Liquid	Accessible	FALSE	1344	¾" VALVES @ TAR TANKS W/2FL, 2WC & 4SC	02	0.8	Yes, equipment can be isolated from service	TRUE	FALSE	FALSE	40 CFR 61 Subpart L	UNCLASSIFIED	24-Oct-16	23-Nov-16	ARAN PARKER
COKE	R414	Valve	Externally Actuated	Light Liquid	Accessible	FALSE	1340	6" & ¾" VALVES W/ @ TAR TANKS W/2FL, 2WC & 2SC	02	6	Yes, equipment can be isolated from service	TRUE	FALSE	FALSE	40 CFR 61 Subpart L	UNCLASSIFIED	24-Oct-16	23-Nov-16	ARAN PARKER
COKE	R414A	Valve	Externally Actuated	Light Liquid	Accessible	FALSE	1341	¾" VALVES W/ @ TAR TANKS W/2FL, 2WC & 2SC	02	0.8	Yes, equipment can be isolated from service	TRUE	FALSE	FALSE	40 CFR 61 Subpart L	UNCLASSIFIED	24-Oct-16	23-Nov-16	ARAN PARKER
COKE	R415	Valve	Externally Actuated	Light Liquid	Accessible	FALSE	1275	3" VALVE EAST TAR TANK BOTTOM W/2FL & 2WC	02	3	Yes, equipment can be isolated from service	TRUE	FALSE	FALSE	40 CFR 61 Subpart L	UNCLASSIFIED	24-Oct-16	23-Nov-16	ARAN PARKER
COKE	R416	Pump	Standard Service	Light Liquid	Accessible	FALSE	1427	T-101 EXCESS LIQUOR STORAGE TANK PUMPS (EAST)	00	0	Yes, equipment can be isolated from service	TRUE	FALSE	FALSE	40 CFR 61 Subpart L	UNCLASSIFIED	24-Oct-16	23-Nov-16	ARAN PARKER
COKE	R417	Valve	Externally Actuated	Light Liquid	Accessible	FALSE	1424	4" VALVE & CHECK VALVE T-101 PUMP EAST W/12FL & 15WC (EXCESS	06	4	Yes, equipment can be isolated from service	TRUE	FALSE	FALSE	40 CFR 61 Subpart L	UNCLASSIFIED	24-Oct-16	23-Nov-16	ARAN PARKER
COKE	R417A	Valve	Externally Actuated	Light Liquid	Accessible	FALSE	1425	4" CHECK VALVE T-101 PUMP EAST W/12FL & 15WC (EXCESS LIQUOR	06	4	Yes, equipment can be isolated from service	TRUE	FALSE	FALSE	40 CFR 61 Subpart L	UNCLASSIFIED	24-Oct-16	23-Nov-16	ARAN PARKER
COKE	R418	Valve	Externally Actuated	Light Liquid	Accessible	FALSE	1428	4" VALVE T-101 EAST PUMP W/2FL & 6WC (EXCESS LIQUOR STORAGE	04	4	Yes, equipment can be isolated from service	TRUE	FALSE	FALSE	40 CFR 61 Subpart L	UNCLASSIFIED	24-Oct-16	23-Nov-16	ARAN PARKER
COKE	R419	Valve	Externally Actuated	Light Liquid	Accessible	FALSE	1423	6" VALVE @ T-101 PUMPS W/2FL & 4WC (EXCESS LIQUOR STORAGE PU	06	6	Yes, equipment can be isolated from service	TRUE	FALSE	FALSE	40 CFR 61 Subpart L	UNCLASSIFIED	24-Oct-16	23-Nov-16	ARAN PARKER
COKE	R42	Valve	Externally Actuated	Light Liquid	Accessible	FALSE	290	1" VALVE PROCESS WATER COOLING TOWER INLET W/2WC & 8SC	09	1	Yes, equipment can be isolated from service	TRUE	FALSE	FALSE	40 CFR 61 Subpart L	UNCLASSIFIED	24-Oct-16	23-Nov-16	ARAN PARKER
COKE	R420	Valve	Externally Actuated	Light Liquid	Accessible	FALSE	1426	6" VALVE @ T-101 PUMPS W/2FL & 3WC (EXCESS LIQUOR STORAGE PU	08	6	Yes, equipment can be isolated from service	TRUE	FALSE	FALSE	40 CFR 61 Subpart L	UNCLASSIFIED	24-Oct-16	23-Nov-16	ARAN PARKER
COKE	R421	Valve	Externally Actuated	Light Liquid	Accessible	FALSE	1420	4" VALVE & CHECK VALVE T-101 WEST PUMP W/8FL & 9WC (EXCESS L	07	4	Yes, equipment can be isolated from service	TRUE	FALSE	FALSE	40 CFR 61 Subpart L	UNCLASSIFIED	24-Oct-16	23-Nov-16	ARAN PARKER
COKE	R421A	Valve	Externally Actuated	Light Liquid	Accessible	FALSE	1421	4" CHECK VALVE T-101 WEST PUMP W/8FL & 9WC (EXCESS LIQUOR ST	07	4	Yes, equipment can be isolated from service	TRUE	FALSE	FALSE	40 CFR 61 Subpart L	UNCLASSIFIED	24-Oct-16	23-Nov-16	ARAN PARKER
COKE	R422	Pump	Standard Service	Light Liquid	Accessible	FALSE	1419	T-101 EXCESS LIQUOR STORAGE TANK PUMP (WEST) (EXCESS LIQUOR	04	0	Yes, equipment can be isolated from service	TRUE	FALSE	FALSE	40 CFR 61 Subpart L	UNCLASSIFIED	24-Oct-16	23-Nov-16	ARAN PARKER
COKE	R423	Valve	Externally Actuated	Light Liquid	Accessible	FALSE	1422	4" VALVE T-101 WEST PUMP INLET W/2FL & 5WC (EXCESS LIQUOR ST	05	4	Yes, equipment can be isolated from service	TRUE	FALSE	FALSE	40 CFR 61 Subpart L	UNCLASSIFIED	24-Oct-16	23-Nov-16	ARAN PARKER
COKE	R424	Valve	Externally Actuated	Light Liquid	Accessible	FALSE	1450	(2) 3" VALVES @ T-101 TAR PUMP	02	3	Yes, equipment can be isolated from service	TRUE	FALSE	FALSE	40 CFR 61 Subpart L	UNCLASSIFIED	24-Oct-16	23-Nov-16	ARAN PARKER
COKE	R424A	Valve	Externally Actuated	Light Liquid	Accessible	FALSE	1451	3" VALVES @ T-101 TAR PUMP	02	3	Yes, equipment can be isolated from service	TRUE	FALSE	FALSE	40 CFR 61 Subpart L	UNCLASSIFIED	24-Oct-16	23-Nov-16	ARAN PARKER
COKE	R425	Valve	Externally Actuated	Light Liquid	Accessible	FALSE	1448	(2) 3" VALVES @ T-101 TAR PUMP W/2FL, 5WC & 7SC	03	3	Yes, equipment can be isolated from service	TRUE	FALSE	FALSE	40 CFR 61 Subpart L	UNCLASSIFIED	24-Oct-16	23-Nov-16	ARAN PARKER
COKE	R425A	Valve	Externally Actuated	Light Liquid	Accessible	FALSE	1449	3" VALVES @ T-101 TAR PUMP W/2FL, 5WC & 7SC	03	3	Yes, equipment can be isolated from service	TRUE	FALSE	FALSE	40 CFR 61 Subpart L	UNCLASSIFIED	24-Oct-16	23-Nov-16	ARAN PARKER
COKE	R426	Valve	Externally Actuated	Light Liquid	Accessible	FALSE	1444	3" & (2) 1.5" VALVES @ T-101 TAR PUMP W/2FL, 2WC & 8SC	08	3	Yes, equipment can be isolated from service	TRUE	FALSE	FALSE	40 CFR 61 Subpart L	UNCLASSIFIED	24-Oct-16	23-Nov-16	ARAN PARKER
COKE	R426A	Valve	Externally Actuated	Light Liquid	Accessible	FALSE	1445	1.5" VALVES @ T-101 TAR PUMP W/2FL, 2WC & 8SC	08	1.5	Yes, equipment can be isolated from service	TRUE	FALSE	FALSE	40 CFR 61 Subpart L	UNCLASSIFIED	24-Oct-16	23-Nov-16	ARAN PARKER
COKE	R426B	Valve	Externally Actuated	Light Liquid	Accessible	FALSE	1446	1.5" VALVES @ T-101 TAR PUMP W/2FL, 2WC & 8SC	08	1.5	Yes, equipment can be isolated from service	TRUE	FALSE	FALSE	40 CFR 61 Subpart L	UNCLASSIFIED	24-Oct-16	23-Nov-16	ARAN PARKER
COKE	R427	Valve	Externally Actuated	Light Liquid	Accessible	FALSE	1441	½" & (2) 1.5" VALVES @ T-101 TAR PUMP W/1WC & 12SC	08	0.5	Yes, equipment can be isolated from service	TRUE	FALSE	FALSE	40 CFR 61 Subpart L	UNCLASSIFIED	24-Oct-16	23-Nov-16	ARAN PARKER
COKE	R427A	Valve	Externally Actuated	Light Liquid	Accessible	FALSE	1442	1.5" VALVES @ T-101 TAR PUMP W/1WC & 12SC	08	1.5	Yes, equipment can be isolated from service	TRUE	FALSE	FALSE	40 CFR 61 Subpart L	UNCLASSIFIED	24-Oct-16	23-Nov-16	ARAN PARKER
COKE	R427B	Valve	Externally Actuated	Light Liquid	Accessible	FALSE	1443	1.5" VALVES @ T-101 TAR PUMP W/1WC & 12SC	08	1.5	Yes, equipment can be isolated from service	TRUE	FALSE	FALSE	40 CFR 61 Subpart L	UNCLASSIFIED	24-Oct-16	23-Nov-16	ARAN PARKER
COKE	R428	Valve	Externally Actuated	Light Liquid	Accessible	FALSE	1447	3" VALVE @ T-101 TAR PUMP W/2FL & 1WC	03	3	Yes, equipment can be isolated from service	TRUE	FALSE	FALSE	40 CFR 61 Subpart L	UNCLASSIFIED	24-Oct-16	23-Nov-16	ARAN PARKER
COKE	R429	Pump	Standard Service	Light Liquid	Accessible	FALSE	1419	T-101 EXCESS LIQUOR STORAGE TANK TAR PUMP	02	0	Yes, equipment can be isolated from service	TRUE	FALSE	FALSE	40 CFR 61 Subpart L	UNCLASSIFIED	24-Oct-16	23-Nov-16	ARAN PARKER
COKE	R43	Valve	Externally Actuated	Light Liquid	Accessible	FALSE	291	1" VALVE PROCESS WATER COOLING TOWER INLET W/2WC & 8SC	09	1	Yes, equipment can be isolated from service	TRUE	FALSE	FALSE	40 CFR 61 Subpart L	UNCLASSIFIED	24-Oct-16	23-Nov-16	ARAN PARKER
COKE	R430	Flange	Standard Service	Light Liquid	Accessible	FALSE	996	MANHOLE T-101 W/1FL & 1WC	06	36	Yes, equipment can be isolated from service	TRUE	FALSE	FALSE	40 CFR 61 Subpart L	UNCLASSIFIED	24-Oct-16	23-Nov-16	ARAN PARKER
COKE	R431	Valve	Externally Actuated	Light Liquid	Accessible	FALSE	1430	(11) 1.5" LEVEL CHECK VALVES T-101 BOTTOM W/21SC	07	1.5	Yes, equipment can be isolated from service	TRUE	FALSE	FALSE	40 CFR 61 Subpart L	UNCLASSIFIED	24-Oct-16	23-Nov-16	ARAN PARKER
COKE	R431A	Valve	Externally Actuated	Light Liquid	Accessible	FALSE	1431	1.5" LEVEL CHECK VALVES T-101 BOTTOM W/21SC	06	1.5	Yes, equipment can be isolated from service	TRUE	FALSE	FALSE	40 CFR 61 Subpart L	UNCLASSIFIED	24-Oct-16	23-Nov-16	ARAN PARKER
COKE	R431B	Valve	Externally Actuated	Light Liquid	Accessible	FALSE	1432	1.5" LEVEL CHECK VALVES T-101 BOTTOM W/21SC	06	1.5	Yes, equipment can be isolated from service	TRUE	FALSE	FALSE	40 CFR 61 Subpart L	UNCLASSIFIED	24-Oct-16	23-Nov-16	ARAN PARKER
COKE	R431C	Valve	Externally Actuated	Light Liquid	Accessible	FALSE	1433	1.5" LEVEL CHECK VALVES T-101 BOTTOM W/21SC	06	1.5	Yes, equipment can be isolated from service	TRUE	FALSE	FALSE	40 CFR 61 Subpart L	UNCLASSIFIED	24-Oct-16	23-Nov-16	ARAN PARKER
COKE	R431D	Valve	Externally Actuated	Light Liquid	Accessible	FALSE	1434	1.5" LEVEL CHECK VALVES T-101 BOTTOM W/21SC	06	1.5	Yes, equipment can be isolated from service	TRUE	FALSE	FALSE	40 CFR 61 Subpart L	UNCLASSIFIED	24-Oct-16	23-Nov-16	ARAN PARKER
COKE	R431E	Valve	Externally Actuated	Light Liquid	Accessible	FALSE	1435	1.5" LEVEL CHECK VALVES T-101 BOTTOM W/21SC	06	1.5	Yes, equipment can be isolated from service	TRUE	FALSE	FALSE	40 CFR 61 Subpart L	UNCLASSIFIED	24-Oct-16	23-Nov-16	ARAN PARKER
COKE	R431F	Valve	Externally Actuated	Light Liquid	Accessible	FALSE	1436	1.5" LEVEL CHECK VALVES T-101 BOTTOM W/21SC	06	1.5	Yes, equipment can be isolated from service	TRUE	FALSE	FALSE	40 CFR 61 Subpart L	UNCLASSIFIED	24-Oct-16	23-Nov-16	ARAN PARKER
COKE	R431G	Valve	Externally Actuated	Light Liquid	Accessible	FALSE	1437	1.5" LEVEL CHECK VALVES T-101 BOTTOM W/21SC	06	1.5	Yes, equipment can be isolated from service	TRUE	FALSE	FALSE	40 CFR 61 Subpart L	UNCLASSIFIED	24-Oct-16	23-Nov-16	ARAN PARKER
COKE	R431H	Valve	Externally Actuated	Light Liquid	Accessible	FALSE	1438	1.5" LEVEL CHECK VALVES T-101 BOTTOM W/21SC	06	1.5	Yes, equipment can be isolated from service	TRUE	FALSE	FALSE	40 CFR 61 Subpart L	UNCLASSIFIED	24-Oct-16	23-Nov-16	ARAN PARKER
COKE	R431I	Valve	Externally Actuated	Light Liquid	Accessible	FALSE	1439	1.5" LEVEL CHECK VALVES T-101 BOTTOM W/21SC	06	1.5	Yes, equipment can be isolated from service	TRUE	FALSE	FALSE	40 CFR 61 Subpart L	UNCLASSIFIED	24-Oct-16	23-Nov-16	ARAN PARKER
COKE	R431J	Valve	Externally Actuated	Light Liquid	Accessible	FALSE	1440	1.5" LEVEL CHECK VALVES T-101 BOTTOM W/21SC	06	1.5	Yes, equipment can be isolated from service	TRUE	FALSE	FALSE	40 CFR 61 Subpart L	UNCLASSIFIED	24-Oct-16	23-Nov-16	ARAN PARKER
COKE	R432	Valve	Externally Actuated	Light Liquid	Accessible	FALSE	1429	1.5" LEVEL CHECK VALVE T-101 BOTTOM W/8SC	03	1.5	Yes, equipment can be isolated from service	TRUE	FALSE	FALSE	40 CFR 61 Subpart L	UNCLASSIFIED	24-Oct-16	23-Nov-16	ARAN PARKER
COKE	R433	Flange	Standard Service	Light Liquid	Accessible	FALSE	1400	MANHOLE T-101 W/2FL & 2WC	05	36	Yes, equipment can be isolated from service	TRUE	FALSE	FALSE	40 CFR 61 Subpart L	UNCLASSIFIED	24-Oct-16	23-Nov-16	ARAN PARKER
COKE	R434	Valve	Externally Actuated	Light Liquid	Accessible	FALSE	1235	18" VALVE LIQUOR LINE @ EAST TAR DECANTER W/2FL & 3WC	1P3	18	Yes, equipment can be isolated from service	TRUE	FALSE	FALSE	40 CFR 61 Subpart L	UNCLASSIFIED	24-Oct-16	23-Nov-16	ARAN PARKER
COKE	R435	Valve	Externally Actuated	Light Liquid	Accessible	FALSE	1219	18" VALVE LIQUOR LINE @ WEST TAR DECANTER W/2FL & 3WC	1P3	18	Yes, equipment can be isolated from service	TRUE	FALSE	FALSE	40 CFR 61 Subpart L	UNCLASSIFIED	24-Oct-16	23-Nov-16	ARAN PARKER
COKE	R436	Valve	Externally Actuated	Light Liquid	Accessible	FALSE	1218	12" VALVE LIQUOR LINE @ EAST TAR DECANTER	1P3	12	Yes, equipment can be isolated from service	TRUE	FALSE	FALSE	40 CFR 61 Subpart L	UNCLASSIFIED	24-Oct-16	23-Nov-16	ARAN PARKER
COKE	R437	Valve	Externally Actuated	Light Liquid	Accessible	FALSE	1220	4" VALVE FROM THICKENER TO LIGHT OIL LINE @ EAST TAR DECANTE	1P1	4	Yes, equipment can be isolated from service	TRUE	FALSE	FALSE	40 CFR 61 Subpart L	UNCLASSIFIED	24-Oct-16	23-Nov-16	ARAN PARKER
COKE	R438	Valve	Externally Actuated	Light Liquid	Accessible	FALSE	1221	4" VALVE FROM THICKENER TO LIGHT OIL LINE @ WEST TAR DECANTE	1P4	4	Yes, equipment can be isolated from service	TRUE	FALSE	FALSE	40 CFR 61 Subpart L	UNCLASSIFIED	24-Oct-16	23-Nov-16	ARAN PARKER
COKE	R439	Valve	Externally Actuated	Light Liquid	Accessible	FALSE	1241	6" VALVE @ WEST TAR DECANTER W/2FL & 4WC	1P3	6	Yes, equipment can be isolated from service	TRUE	FALSE	FALSE	40 CFR 61 Subpart L	UNCLASSIFIED	24-Oct-16	23-Nov-16	ARAN PARKER

UNIT_CODE	TAG_ NUMBER	EQUITYPE_DESC	CONFIG_DESC	SERVICE_DESC	ACCESS_DESC	CLOSED_VENT _SYSTEM	ROUTE	LOCATION	LEVEL	SIZE	IFSTYPE_DESC	ATTEMPT_A LLOWED	UNDER_300_H OURS_SERVIC E	POTENTIAL_ OPEN_END	GROUP_DESC	PRODUCT_DESC	DATE_ADDED	DATE_IN_SERVICE	TECH_DESC
COKE	R44	Valve	Externally Actuated	Light Liquid	Accessible	FALSE	292	1" VALVE PROCESS WATER COOLING TOWER INLET W/2WC & 8SC	011	1	Yes, equipment can be isolated from service	TRUE	FALSE	FALSE	40 CFR 61 Subpart L	UNCLASSIFIED	24-Oct-16	23-Nov-16	ARAN PARKER
COKE	R440	Valve	Externally Actuated	Light Liquid	Accessible	FALSE	1222	6" VALVE @ WEST TAR DECANTER W/3FL & 6WC	1P5	6	Yes, equipment can be isolated from service	TRUE	FALSE	FALSE	40 CFR 61 Subpart L	UNCLASSIFIED	24-Oct-16	23-Nov-16	ARAN PARKER
COKE	R441	Flange	Standard Service	Light Liquid	Accessible	FALSE	1154	4 FT. ENTRY HATCH/4" FL (NE SIDE)	03	48	Yes, equipment can be isolated from service	TRUE	FALSE	FALSE	40 CFR 61 Subpart L	UNCLASSIFIED	24-Oct-16	23-Nov-16	ARAN PARKER
COKE	R442	Flange	Standard Service	Light Liquid	Accessible	FALSE	1202	(4) 6" FL EAST TAR DECANTER	010	4	Yes, equipment can be isolated from service	TRUE	FALSE	FALSE	40 CFR 61 Subpart L	UNCLASSIFIED	24-Oct-16	23-Nov-16	ARAN PARKER
COKE	R442A	Flange	Standard Service	Light Liquid	Accessible	FALSE	1203	6" FL EAST TAR DECANTER	010	6	Yes, equipment can be isolated from service	TRUE	FALSE	FALSE	40 CFR 61 Subpart L	UNCLASSIFIED	24-Oct-16	23-Nov-16	ARAN PARKER
COKE	R442B	Flange	Standard Service	Light Liquid	Accessible	FALSE	1204	6" FL EAST TAR DECANTER	010	6	Yes, equipment can be isolated from service	TRUE	FALSE	FALSE	40 CFR 61 Subpart L	UNCLASSIFIED	24-Oct-16	23-Nov-16	ARAN PARKER
COKE	R442C	Flange	Standard Service	Light Liquid	Accessible	FALSE	1205	6" FL EAST TAR DECANTER	010	6	Yes, equipment can be isolated from service	TRUE	FALSE	FALSE	40 CFR 61 Subpart L	UNCLASSIFIED	24-Oct-16	23-Nov-16	ARAN PARKER
COKE	R443	Flange	Standard Service	Light Liquid	Accessible	FALSE	1230	4 FT. ENTRY HATCH (SOUTH SIDE) EAST TAR DECANTER	020	2	Yes, equipment can be isolated from service	TRUE	FALSE	FALSE	40 CFR 61 Subpart L	UNCLASSIFIED	24-Oct-16	23-Nov-16	ARAN PARKER
COKE	R444	Flange	Standard Service	Light Liquid	Accessible	FALSE	1244	4 FT. ENTRY HATCH (SOUTH SIDE) WEST TAR DECANTER	020	2	Yes, equipment can be isolated from service	TRUE	FALSE	FALSE	40 CFR 61 Subpart L	UNCLASSIFIED	24-Oct-16	23-Nov-16	ARAN PARKER
COKE	R445	Valve	Externally Actuated	Light Liquid	Accessible	FALSE	882	3" FL BLOW DOWN FLUSHING LIQUOR BETWEEN FLUSHING LIQUOR & BU	06	3	Yes, equipment can be isolated from service	TRUE	FALSE	FALSE	40 CFR 61 Subpart L	UNCLASSIFIED	24-Oct-16	23-Nov-16	ARAN PARKER
COKE	R446	Valve	Externally Actuated	Light Liquid	Difficult to Monitor	FALSE	1191	(2) 3" FL FLUSHING LIQUOR (2) 4" FL FLUSHING LIQUOR (BETWEE	020	3	Yes, equipment can be isolated from service	TRUE	FALSE	FALSE	40 CFR 61 Subpart L	UNCLASSIFIED	24-Oct-16	23-Nov-16	ARAN PARKER
COKE	R447	Valve	Externally Actuated	Light Liquid	Difficult to Monitor	FALSE	1192	2" VALVE FLUSHING LIQUOR (2) 2" FL FLUSHING LIQUOR 2SC (BETW	025	2	Yes, equipment can be isolated from service	TRUE	FALSE	FALSE	40 CFR 61 Subpart L	UNCLASSIFIED	24-Oct-16	23-Nov-16	ARAN PARKER
COKE	R448	Valve	Externally Actuated	Light Liquid	Accessible	FALSE	1223	(3) 2" FLUSHING LIQUOR LINE VALVE (22) 2"SC (MIDDLE OF TAR D	1P5	2	Yes, equipment can be isolated from service	TRUE	FALSE	FALSE	40 CFR 61 Subpart L	UNCLASSIFIED	24-Oct-16	23-Nov-16	ARAN PARKER
COKE	R448A	Valve	Externally Actuated	Light Liquid	Accessible	FALSE	1224	2" FLUSHING LIQUOR LINE VALVE (22) 2"SC (MIDDLE OF TAR DECAN	1P5	2	Yes, equipment can be isolated from service	TRUE	FALSE	FALSE	40 CFR 61 Subpart L	UNCLASSIFIED	24-Oct-16	23-Nov-16	ARAN PARKER
COKE	R448B	Valve	Externally Actuated	Light Liquid	Accessible	FALSE	1225	2" FLUSHING LIQUOR LINE VALVE (22) 2"SC (MIDDLE OF TAR DECAN	1P5	2	Yes, equipment can be isolated from service	TRUE	FALSE	FALSE	40 CFR 61 Subpart L	UNCLASSIFIED	24-Oct-16	23-Nov-16	ARAN PARKER
COKE	R449	Valve	Externally Actuated	Light Liquid	Accessible	FALSE	1258	1" VALVE FLUSHING LIQUOR (16) 1"SC (SOUTH END OF TAR DECANTE	02	1	Yes, equipment can be isolated from service	TRUE	FALSE	FALSE	40 CFR 61 Subpart L	UNCLASSIFIED	24-Oct-16	01-Dec-16	Matt Case
COKE	R45	Pump	Standard Service	Light Liquid	Accessible	FALSE	330	PROCESS WATER PUMP @ PROCESS WATER DECANTER	04	0	Yes, equipment can be isolated from service	TRUE	FALSE	FALSE	40 CFR 61 Subpart L	UNCLASSIFIED	24-Oct-16	23-Nov-16	ARAN PARKER
COKE	R450	Valve	Externally Actuated	Light Liquid	Accessible	FALSE	1259	4" VALVE FLUSHING LIQUOR BLOW DOWN (4) 4" FL & 7WC FLUSHING	010	4	Yes, equipment can be isolated from service	TRUE	FALSE	FALSE	40 CFR 61 Subpart L	UNCLASSIFIED	24-Oct-16	07-Dec-16	ARAN PARKER
COKE	R451	Connector	Standard Service	Light Liquid	Accessible	FALSE	1260	(11) 1"SC @ TAR TANKS	09	1	Yes, equipment can be isolated from service	TRUE	FALSE	FALSE	40 CFR 61 Subpart L	UNCLASSIFIED	24-Oct-16	07-Dec-16	Matt Case
COKE	R452	Flange	Standard Service	Light Liquid	Accessible	FALSE	1243	(33) 2"SC (GOES INTO 4" LINE TO OVENS) @ WEST TAR DECANTER	1P5	2	Yes, equipment can be isolated from service	TRUE	FALSE	FALSE	40 CFR 61 Subpart L	UNCLASSIFIED	24-Oct-16	23-Nov-16	ARAN PARKER
COKE	R453	Valve	Externally Actuated	Light Liquid	Accessible	FALSE	1309	(3) 1" VALVES (TO TAR TANK) (43) SC NEAR PUMPS	08	1	Yes, equipment can be isolated from service	TRUE	FALSE	FALSE	40 CFR 61 Subpart L	UNCLASSIFIED	24-Oct-16	23-Nov-16	ARAN PARKER
COKE	R454	Valve	Externally Actuated	Light Liquid	Accessible	FALSE	1310	WEST TAR (CLEAN TAR) (3) 2" VALVES, ¾ "VALVE (CLEAN TAR) & 1	03	2	Yes, equipment can be isolated from service	TRUE	FALSE	FALSE	40 CFR 61 Subpart L	UNCLASSIFIED	24-Oct-16	23-Nov-16	ARAN PARKER
COKE	R454A	Valve	Externally Actuated	Light Liquid	Accessible	FALSE	1311	WEST TAR (CLEAN TAR) 2" VALVES,	03	2	Yes, equipment can be isolated from service	TRUE	FALSE	FALSE	40 CFR 61 Subpart L	UNCLASSIFIED	24-Oct-16	23-Nov-16	ARAN PARKER
COKE	R454B	Valve	Externally Actuated	Light Liquid	Accessible	FALSE	1312	WEST TAR (CLEAN TAR) 2" VALVES,	03	2	Yes, equipment can be isolated from service	TRUE	FALSE	FALSE	40 CFR 61 Subpart L	UNCLASSIFIED	24-Oct-16	23-Nov-16	ARAN PARKER
COKE	R454C	Valve	Externally Actuated	Light Liquid	Accessible	FALSE	1313	WEST TAR (CLEAN TAR) ¾ "VALVE (CLEAN TAR) & 16SC	03	0.8	Yes, equipment can be isolated from service	TRUE	FALSE	FALSE	40 CFR 61 Subpart L	UNCLASSIFIED	24-Oct-16	23-Nov-16	ARAN PARKER
COKE	R455	Valve	Externally Actuated	Light Liquid	Accessible	FALSE	1314	WEST TAR (3) 1½" VALVES, 34SC (CLEAN TAR) & ½" VALVE	08	1.5	Yes, equipment can be isolated from service	TRUE	FALSE	FALSE	40 CFR 61 Subpart L	UNCLASSIFIED	24-Oct-16	23-Nov-16	ARAN PARKER
COKE	R455A	Valve	Externally Actuated	Light Liquid	Accessible	FALSE	1315	WEST TAR 1½" VALVES 34SC (CLEAN TAR)	08	1.5	Yes, equipment can be isolated from service	TRUE	FALSE	FALSE	40 CFR 61 Subpart L	UNCLASSIFIED	24-Oct-16	23-Nov-16	ARAN PARKER
COKE	R455B	Valve	Externally Actuated	Light Liquid	Accessible	FALSE	1316	WEST TAR 1½" VALVES 34SC (CLEAN TAR)	08	1.5	Yes, equipment can be isolated from service	TRUE	FALSE	FALSE	40 CFR 61 Subpart L	UNCLASSIFIED	24-Oct-16	23-Nov-16	ARAN PARKER
COKE	R455C	Valve	Externally Actuated	Light Liquid	Accessible	FALSE	1317	WEST TAR ½" VALVE	08	0.5	Yes, equipment can be isolated from service	TRUE	FALSE	FALSE	40 CFR 61 Subpart L	UNCLASSIFIED	24-Oct-16	23-Nov-16	ARAN PARKER
COKE	R456	Valve	Externally Actuated	Light Liquid	Accessible	FALSE	1318	WEST TAR (3) 1½" VALVES & 22SC	020	1.5	Yes, equipment can be isolated from service	TRUE	FALSE	FALSE	40 CFR 61 Subpart L	UNCLASSIFIED	24-Oct-16	23-Nov-16	ARAN PARKER
COKE	R456A	Valve	Externally Actuated	Light Liquid	Accessible	FALSE	1319	WEST TAR 1½" VALVES & 22SC	2P3	1.5	Yes, equipment can be isolated from service	TRUE	FALSE	FALSE	40 CFR 61 Subpart L	UNCLASSIFIED	24-Oct-16	23-Nov-16	ARAN PARKER
COKE	R456B	Valve	Externally Actuated	Light Liquid	Accessible	FALSE	1320	WEST TAR 1½" VALVES & 22SC	2P3	1.5	Yes, equipment can be isolated from service	TRUE	FALSE	FALSE	40 CFR 61 Subpart L	UNCLASSIFIED	24-Oct-16	23-Nov-16	ARAN PARKER
COKE	R457	Valve	Externally Actuated	Light Liquid	Accessible	FALSE	1321	WEST TAR (3) 1½" VALVES & 22SC	3P3	1.5	Yes, equipment can be isolated from service	TRUE	FALSE	FALSE	40 CFR 61 Subpart L	UNCLASSIFIED	24-Oct-16	23-Nov-16	ARAN PARKER
COKE	R457A	Valve	Externally Actuated	Light Liquid	Accessible	FALSE	1322	WEST TAR 1½" VALVES & 22SC	3P3	1.5	Yes, equipment can be isolated from service	TRUE	FALSE	FALSE	40 CFR 61 Subpart L	UNCLASSIFIED	24-Oct-16	23-Nov-16	ARAN PARKER
COKE	R457B	Valve	Externally Actuated	Light Liquid	Accessible	FALSE	1323	WEST TAR 1½" VALVES & 22SC	3P3	1.5	Yes, equipment can be isolated from service	TRUE	FALSE	FALSE	40 CFR 61 Subpart L	UNCLASSIFIED	24-Oct-16	23-Nov-16	ARAN PARKER
COKE	R458	Pump	Standard Service	Light Liquid	Accessible	FALSE	1354	TAR DIKE SUBMERSIBLE PUMP	04	0	Yes, equipment can be isolated from service	TRUE	FALSE	FALSE	40 CFR 61 Subpart L	UNCLASSIFIED	24-Oct-16	23-Nov-16	ARAN PARKER
COKE	R459	Valve	Externally Actuated	Light Liquid	Accessible	FALSE	1348	(2) 2" VALVES, 38SC, (2) 2" CHECK VALVES & (2) 1½" VALVES	01	2	Yes, equipment can be isolated from service	TRUE	FALSE	FALSE	40 CFR 61 Subpart L	UNCLASSIFIED	24-Oct-16	23-Nov-16	ARAN PARKER
COKE	R459A	Valve	Externally Actuated	Light Liquid	Accessible	FALSE	1349	2" VALVES, 38SC	01	2	Yes, equipment can be isolated from service	TRUE	FALSE	FALSE	40 CFR 61 Subpart L	UNCLASSIFIED	24-Oct-16	23-Nov-16	ARAN PARKER
COKE	R459B	Valve	Externally Actuated	Light Liquid	Accessible	FALSE	1350	2" CHECK VALVES	01	2	Yes, equipment can be isolated from service	TRUE	FALSE	FALSE	40 CFR 61 Subpart L	UNCLASSIFIED	24-Oct-16	23-Nov-16	ARAN PARKER
COKE	R459C	Valve	Externally Actuated	Light Liquid	Accessible	FALSE	1351	2" CHECK VALVES	01	2	Yes, equipment can be isolated from service	TRUE	FALSE	FALSE	40 CFR 61 Subpart L	UNCLASSIFIED	24-Oct-16	23-Nov-16	ARAN PARKER
COKE	R459D	Valve	Externally Actuated	Light Liquid	Accessible	FALSE	1352	1½" VALVES	01	1.5	Yes, equipment can be isolated from service	TRUE	FALSE	FALSE	40 CFR 61 Subpart L	UNCLASSIFIED	24-Oct-16	23-Nov-16	ARAN PARKER
COKE	R459E	Valve	Externally Actuated	Light Liquid	Accessible	FALSE	1353	1½" VALVES	01	1.5	Yes, equipment can be isolated from service	TRUE	FALSE	FALSE	40 CFR 61 Subpart L	UNCLASSIFIED	24-Oct-16	23-Nov-16	ARAN PARKER
COKE	R46	Pump	Standard Service	Light Liquid	Accessible	FALSE	332	PROCESS WATER PUMP @ PROCESS WATER DECANTER	04	0	Yes, equipment can be isolated from service	TRUE	FALSE	FALSE	40 CFR 61 Subpart L	UNCLASSIFIED	24-Oct-16	23-Nov-16	ARAN PARKER
COKE	R460	Flange	Standard Service	Light Liquid	Accessible	FALSE	1306	4" LINE (EXCESS FLUSHING LIQUOR TO DIRTY LIQUOR TANK) W/14WC	010	4	Yes, equipment can be isolated from service	TRUE	FALSE	FALSE	40 CFR 61 Subpart L	UNCLASSIFIED	24-Oct-16	07-Dec-16	ARAN PARKER
COKE	R461	Pump	Standard Service	Light Liquid	Accessible	FALSE	1	TAR SEPARATOR SUMP PUMP	02	0	Yes, equipment can be isolated from service	TRUE	FALSE	FALSE	40 CFR 61 Subpart L	UNCLASSIFIED	24-Oct-16	23-Nov-16	ARAN PARKER
COKE	R462	Valve	Externally Actuated	Light Liquid	Accessible	FALSE	2	1" & 2" VALVES W/3FL, 6WC & 11SC	05	1	Yes, equipment can be isolated from service	TRUE	FALSE	FALSE	40 CFR 61 Subpart L	UNCLASSIFIED	24-Oct-16	23-Nov-16	ARAN PARKER
COKE	R462A	Valve	Externally Actuated	Light Liquid	Accessible	FALSE	3	2" VALVES W/3FL, 6WC & 11SC	05	2	Yes, equipment can be isolated from service	TRUE	FALSE	FALSE	40 CFR 61 Subpart L	UNCLASSIFIED	24-Oct-16	23-Nov-16	ARAN PARKER
COKE	R463	Valve	Externally Actuated	Light Liquid	Accessible	FALSE	41	(2) 4" VALVES FOR COG CONDENSATE (4) 4"FL, (1) 10"FL, 20" FL	1P8	4	Yes, equipment can be isolated from service	TRUE	FALSE	FALSE	40 CFR 61 Subpart L	UNCLASSIFIED	24-Oct-16	23-Nov-16	ARAN PARKER
COKE	R463A	Valve	Externally Actuated	Light Liquid	Accessible	FALSE	42	4" VALVES FOR COG CONDENSATE (4) 4"FL, (1) 10"FL, 20" FL, 3	1P8	4	Yes, equipment can be isolated from service	TRUE	FALSE	FALSE	40 CFR 61 Subpart L	UNCLASSIFIED	24-Oct-16	23-Nov-16	ARAN PARKER
COKE	R464	Flange	Standard Service	Light Liquid	Accessible	FALSE	190	4" COG CONDENSATE LINE (BASEMENT @ SULFATE)	08	4	Yes, equipment can be isolated from service	TRUE	FALSE	FALSE	40 CFR 61 Subpart L	UNCLASSIFIED	24-Oct-16	30-Nov-16	ARAN PARKER
COKE	R465	Flange	Standard Service	Light Liquid	Accessible	FALSE	191	4" COG CONDENSATE LINE (BASEMENT@SULFATE)	08	4	Yes, equipment can be isolated from service	TRUE	FALSE	FALSE	40 CFR 61 Subpart L	UNCLASSIFIED	24-Oct-16	30-Nov-16	ARAN PARKER
COKE	R466	Valve	Externally Actuated	Light Liquid	Accessible	FALSE	192	4" VALVE COG CONDENSATE & (2) 4" FL (BASEMENT@SULFATE)	010	4	Yes, equipment can be isolated from service	TRUE	FALSE	FALSE	40 CFR 61 Subpart L	UNCLASSIFIED	24-Oct-16	23-Nov-16	ARAN PARKER
COKE	R467	Flange	Standard Service	Light Liquid	Accessible	FALSE	193	(2) 4" FL COG CONDENSATE & (4) 4"WC	08	4	Yes, equipment can be isolated from service	TRUE	FALSE	FALSE	40 CFR 61 Subpart L	UNCLASSIFIED	24-Oct-16	30-Nov-16	ARAN PARKER
COKE	R468	Valve	Externally Actuated	Light Liquid	Accessible	FALSE	937	3" VALVE COG CONDENSATE, (2) ½" VALVES, (5) 3" FL & 8WC @ SU	08	3	Yes, equipment can be isolated from service	TRUE	FALSE	FALSE	40 CFR 61 Subpart L	UNCLASSIFIED	24-Oct-16	23-Nov-16	ARAN PARKER
COKE	R468A	Valve	Externally Actuated	Light Liquid	Accessible	FALSE	938	½" VALVES, (5) 3" FL & 8WC @ SULFATE	08	0.5	Yes, equipment can be isolated from service	TRUE	FALSE	FALSE	40 CFR 61 Subpart L	UNCLASSIFIED	24-Oct-16	23-Nov-16	ARAN PARKER
COKE	R468B	Valve	Externally Actuated	Light Liquid	Accessible	FALSE	939	½" VALVES, (5) 3" FL & 8WC @ SULFATE	08	0.5	Yes, equipment can be isolated from service	TRUE	FALSE	FALSE	40 CFR 61 Subpart L	UNCLASSIFIED	24-Oct-16	23-Nov-16	ARAN PARKER
COKE	R469	Flange	Standard Service	Light Liquid	Accessible	FALSE	941	3" COG LINE, (6) 3"FL & 13WC (STEPS TO EXHAUSTER ROOM)	010	3	Yes, equipment can be isolated from service	TRUE	FALSE	FALSE	40 CFR 61 Subpart L	UNCLASSIFIED	24-Oct-16	23-Nov-16	ARAN PARKER
COKE	R47	Valve	Externally Actuated	Light Liquid	Accessible	FALSE	326	12" VALVE @ PROCESS WATER COOLING TOWER PUMPS W/2FL & 7WC	1P5	12	Yes, equipment can be isolated from service	TRUE	FALSE	FALSE	40 CFR 61 Subpart L	UNCLASSIFIED	24-Oct-16	23-Nov-16	ARAN PARKER
COKE	R470	Flange	Standard Service	Light Liquid	Accessible	FALSE	940	4" COG CONDENSATE LINE, (3) 4"FL & 9WC @ SULFATE	012	3	Yes, equipment can be isolated from service	TRUE	FALSE	FALSE	40 CFR 61 Subpart L	UNCLASSIFIED	24-Oct-16	02-Dec-16	ARAN PARKER
COKE	R471	Valve	Externally Actuated	Light Liquid	Accessible	FALSE	30	3" VALVE COG CONDENSATE, (5) 3"FL & 9WC @ C PRECIP	00	0.5	Yes, equipment can be isolated from service	TRUE	FALSE	FALSE	40 CFR 61 Subpart L	UNCLASSIFIED	24-Oct-16	30-Nov-16	ARAN PARKER
COKE	R472	Flange	Standard Service	Light Liquid	Accessible	FALSE	195	4" COG CONDENSATE 4" FL & 6WC (UNDER EXHAUSTER ROOM)	08	4	Yes, equipment can be isolated from service	TRUE	FALSE	FALSE	40 CFR 61 Subpart L	UNCLASSIFIED	24-Oct-16	30-Nov-16	ARAN PARKER
COKE	R473	Valve	Externally Actuated	Light Liquid	Accessible	FALSE	49	4" DRAIN VALVE "C" PRECIPITATOR, (7) 4"FL, ¾" VALVE, 4SC, 12	14	0	Yes, equipment can be isolated from service	TRUE	FALSE	FALSE	40 CFR 61 Subpart L	UNCLASSIFIED	24-Oct-16	30-Nov-16	ARAN PARKER
COKE	R474	Valve	Externally Actuated	Light Liquid	Accessible	FALSE	50	24" ACCESS HATCH "C" PRECIP (2) 24"WC & ¾"WC	11	0	Yes, equipment can be isolated from service	TRUE	FALSE	FALSE	40 CFR 61 Subpart L	UNCLASSIFIED	24-Oct-16	30-Nov-16	ARAN PARKER
COKE	R475	Valve	Externally Actuated	Light Liquid	Accessible	FALSE	16	2" DRAIN (4) 2"FL & 9WC (N. EXH)	07	2	Yes, equipment can be isolated from service	TRUE	FALSE	FALSE	40 CFR 61 Subpart L	UNCLASSIFIED	24-Oct-16	23-Nov-16	ARAN PARKER
COKE	R476	Valve	Externally Actuated	Light Liquid	Accessible	FALSE	14	3" DRAIN W/3FL & 6WC (N. EXH)	06	3	Yes, equipment can be isolated from service	TRUE	FALSE	FALSE	40 CFR 61 Subpart L	UNCLASSIFIED	24-Oct-16	23-Nov-16	ARAN PARKER
COKE	R477	Valve	Externally Actuated	Light Liquid	Accessible	FALSE	20	3" DRAIN W/(3) 1/2" VALVES, 3FL, 7WC & 11SC (N. EXH)	06	3	Yes, equipment can be isolated from service	TRUE	FALSE	FALSE	40 CFR 61 Subpart L	UNCLASSIFIED	24-Oct-16	23-Nov-16	ARAN PARKER
COKE	R477A	Valve	Externally Actuated	Light Liquid	Accessible	FALSE	21	1/2" VALVES, 3FL, 7WC & 11SC (N. EXH)	06	0.5	Yes, equipment can be isolated from service	TRUE	FALSE	FALSE	40 CFR 61 Subpart L	UNCLASSIFIED	24-Oct-16	23-Nov-16	ARAN PARKER
COKE	R477B	Valve	Externally Actuated	Light Liquid	Accessible	FALSE	22	1/2" VALVES, 3FL, 7WC & 11SC (N. EXH)	06	0.5	Yes, equipment can be isolated from service	TRUE	FALSE	FALSE	40 CFR 61 Subpart L	UNCLASSIFIED	24-Oct-16	23-Nov-16	ARAN PARKER
COKE	R477C	Valve	Externally Actuated	Light Liquid	Accessible	FALSE	339	1/2" VALVES, 3FL, 7WC & 11SC (N. EXH)	06	0.5	Yes, equipment can be isolated from service	TRUE	FALSE	FALSE	40 CFR 61 Subpart L	UNCLASSIFIED	24-Oct-16	23-Nov-16	ARAN PARKER
COKE	R478	Valve	Externally Actuated	Light Liquid	Accessible	FALSE	15	3" DRAIN W/3FL & 6WC (N. EXH)	05	3	Yes, equipment can be isolated from service	TRUE	FALSE	FALSE	40 CFR 61 Subpart L	UNCLASSIFIED	24-Oct-16	23-Nov-16	ARAN PARKER
COKE	R479	Valve	Externally Actuated	Light Liquid	Accessible	FALSE	17	13" DRAIN W/3FL & 6WC (N. EXH)	05	3	Yes, equipment can be isolated from service	TRUE	FALSE	FALSE	40 CFR 61 Subpart L	UNCLASSIFIED	24-Oct-16	23-Nov-16	ARAN PARKER
COKE	R48	Valve	Externally Actuated	Light Liquid	Accessible	FALSE	325	12" VALVE @ PROCESS WATER COOLING TOWER PUMPS W/2FL & 9WC	1P5	12	Yes, equipment can be isolated from service	TRUE	FALSE	FALSE	40 CFR 61 Subpart L	UNCLASSIFIED	24-Oct-16	23-Nov-16	ARAN PARKER
COKE	R480	Valve	Externally Actuated	Light Liquid	Accessible	FALSE	18	3" DRAIN W/3FL & 6WC (N. EXH)	05	3	Yes, equipment can be isolated from service	TRUE	FALSE	FALSE	40 CFR 61 Subpart L	UNCLASSIFIED	24-Oct-16	23-Nov-16	ARAN PARKER
COKE	R481	Valve	Externally Actuated	Light Liquid	Accessible	FALSE	19	4FL & 9 WC (N. EXH)	06	3	Yes, equipment can be isolated from service	TRUE	FALSE	FALSE	40 CFR 61 Subpart L	UNCLASSIFIED	24-Oct-16	23-Nov-16	ARAN PARKER
COKE	R482	Valve	Externally Actuated	Light Liquid	Accessible	FALSE	13	3" DRAIN VALVE 3FL, 3WC, & 4SC (N. EXH)	06	3	Yes, equipment can be isolated from service	TRUE	FALSE	FALSE	40 CFR 61 Subpart L	UNCLASSIFIED	24-Oct-16	23-Nov-16	ARAN PARKER
COKE	R483	Valve	Externally Actuated	Light Liquid	Accessible	FALSE	12	3" DRAIN VALVE 3FL, 3WC, & 4SC (N. EXH)	06	3	Yes, equipment can be isolated from service	TRUE	FALSE	FALSE	40 CFR 61 Subpart L	UNCLASSIFIED	24-Oct-16	23-Nov-16	ARAN PARKER
COKE	R484	Valve	Externally Actuated	Light Liquid	Accessible	FALSE	11	3" DRAIN VALVE 3FL, 3WC, & 4SC (N. EXH)	06	3	Yes, equipment can be isolated from service	TRUE	FALSE	FALSE	40 CFR 61 Subpart L	UNCLASSIFIED	24-Oct-16	23-Nov-16	ARAN PARKER
COKE	R485	Valve	Externally Actuated	Light Liquid	Accessible	FALSE	10	3" DRAIN VALVE 3FL, 3WC, & 4SC (N. EXH)	06	3	Yes, equipment can be isolated from service	TRUE	FALSE	FALSE	40 CFR 61 Subpart L	UNCLASSIFIED	24-Oct-16	23-Nov-16	ARAN PARKER

UNIT_CODE	TAG_ NUMBER	EQUITYPE_DESC	CONFIG_DESC	SERVICE_DESC	ACCESS_DESC	CLOSED_VENT _SYSTEM	ROUTE	LOCATION	LEVEL	SIZE	IFSTYPE_DESC	ATTEMPT_A LLOWED	UNDER_300_H OURS_SERVIC E	POTENTIAL_ OPEN_END	GROUP_DESC	PRODUCT_DESC	DATE_ADDED	DATE_IN_SERVICE	TECH_DESC
COKE	R486	Valve	Externally Actuated	Light Liquid	Accessible	FALSE	9	3" DRAIN VALVE 3FL, 3WC, & 4SC (N. EXH)	06	3	Yes, equipment can be isolated from service	TRUE	FALSE	FALSE	40 CFR 61 Subpart L	UNCLASSIFIED	24-Oct-16	23-Nov-16	ARAN PARKER
COKE	R487	Valve	Externally Actuated	Light Liquid	Accessible	FALSE	29	3" DRAIN VALVE W/4FL & 9WC (S. EXH)	03	3	Yes, equipment can be isolated from service	TRUE	FALSE	FALSE	40 CFR 61 Subpart L	UNCLASSIFIED	24-Oct-16	23-Nov-16	ARAN PARKER
COKE	R488	Valve	Externally Actuated	Light Liquid	Accessible	FALSE	28	3" DRAIN VALVE W/4FL & 9WC (S. EXH)	03	3	Yes, equipment can be isolated from service	TRUE	FALSE	FALSE	40 CFR 61 Subpart L	UNCLASSIFIED	24-Oct-16	23-Nov-16	ARAN PARKER
COKE	R489	Valve	Externally Actuated	Light Liquid	Accessible	FALSE	27	3" DRAIN VALVE W/4FL & 9WC (S. EXH)	04	3	Yes, equipment can be isolated from service	TRUE	FALSE	FALSE	40 CFR 61 Subpart L	UNCLASSIFIED	24-Oct-16	23-Nov-16	ARAN PARKER
COKE	R49	Valve	Externally Actuated	Light Liquid	Accessible	FALSE	323	12" VALVE @ PROCESS WATER COOLING TOWER PUMPS W/2FL & 4WC	1P6	12	Yes, equipment can be isolated from service	TRUE	FALSE	FALSE	40 CFR 61 Subpart L	UNCLASSIFIED	24-Oct-16	23-Nov-16	ARAN PARKER
COKE	R490	Valve	Externally Actuated	Light Liquid	Accessible	FALSE	25	3" DRAIN VALVE W/4FL & 9WC (S. EXH)	07	3	Yes, equipment can be isolated from service	TRUE	FALSE	FALSE	40 CFR 61 Subpart L	UNCLASSIFIED	24-Oct-16	23-Nov-16	ARAN PARKER
COKE	R491	Valve	Externally Actuated	Light Liquid	Accessible	FALSE	26	3" DRAIN VALVE W/4FL & 9WC (S. EXH)	06	3	Yes, equipment can be isolated from service	TRUE	FALSE	FALSE	40 CFR 61 Subpart L	UNCLASSIFIED	24-Oct-16	23-Nov-16	ARAN PARKER
COKE	R492	Valve	Externally Actuated	Light Liquid	Accessible	FALSE	23	3" DRAIN VALVE W/4FL & 9WC (S. EXH)	07	3	Yes, equipment can be isolated from service	TRUE	FALSE	FALSE	40 CFR 61 Subpart L	UNCLASSIFIED	24-Oct-16	23-Nov-16	ARAN PARKER
COKE	R493	Valve	Externally Actuated	Light Liquid	Accessible	FALSE	24	3" DRAIN VALVE W/4FL & 9WC (S. EXH)	08	3	Yes, equipment can be isolated from service	TRUE	FALSE	FALSE	40 CFR 61 Subpart L	UNCLASSIFIED	24-Oct-16	23-Nov-16	ARAN PARKER
COKE	R494	Valve	Externally Actuated	Light Liquid	Accessible	FALSE	8	3" DRAIN VALVE W/3FL & 3WC (S. EXH)	05	3	Yes, equipment can be isolated from service	TRUE	FALSE	FALSE	40 CFR 61 Subpart L	UNCLASSIFIED	24-Oct-16	23-Nov-16	ARAN PARKER
COKE	R495	Valve	Externally Actuated	Light Liquid	Accessible	FALSE	7	3" DRAIN VALVE W/3FL & 3WC (S. EXH)	05	3	Yes, equipment can be isolated from service	TRUE	FALSE	FALSE	40 CFR 61 Subpart L	UNCLASSIFIED	24-Oct-16	23-Nov-16	ARAN PARKER
COKE	R496	Valve	Externally Actuated	Light Liquid	Accessible	FALSE	6	3" DRAIN VALVE W/3FL & 3WC (S. EXH)	05	3	Yes, equipment can be isolated from service	TRUE	FALSE	FALSE	40 CFR 61 Subpart L	UNCLASSIFIED	24-Oct-16	23-Nov-16	ARAN PARKER
COKE	R497	Valve	Externally Actuated	Light Liquid	Accessible	FALSE	5	3" DRAIN VALVE W/3FL & 3WC (S. EXH)	05	3	Yes, equipment can be isolated from service	TRUE	FALSE	FALSE	40 CFR 61 Subpart L	UNCLASSIFIED	24-Oct-16	23-Nov-16	ARAN PARKER
COKE	R498	Valve	Externally Actuated	Light Liquid	Accessible	FALSE	4	3" DRAIN VALVE W/3FL & 3WC (S. EXH)	05	3	Yes, equipment can be isolated from service	TRUE	FALSE	FALSE	40 CFR 61 Subpart L	UNCLASSIFIED	24-Oct-16	23-Nov-16	ARAN PARKER
COKE	R499	Valve	Externally Actuated	Light Liquid	Accessible	FALSE	1475	MAIN FLARE OPPOSING SIDE 3" VALVE COG CONDENSATE @ FLARE W/3	06	3	Yes, equipment can be isolated from service	TRUE	FALSE	FALSE	40 CFR 61 Subpart L	UNCLASSIFIED	24-Oct-16	23-Nov-16	ARAN PARKER
COKE	R4A	Valve	Externally Actuated	Light Liquid	Accessible	FALSE	1396	1 1/2"VALVES & 50SC EAST TAR TANK	30	1.5	Yes, equipment can be isolated from service	TRUE	FALSE	FALSE	40 CFR 61 Subpart L	UNCLASSIFIED	24-Oct-16	23-Nov-16	Andrew Ficher
COKE	R4B	Valve	Externally Actuated	Light Liquid	Accessible	FALSE	1397	1 1/2"VALVES & 50SC EAST TAR TANK	30	1.5	Yes, equipment can be isolated from service	TRUE	FALSE	FALSE	40 CFR 61 Subpart L	UNCLASSIFIED	24-Oct-16	23-Nov-16	Andrew Ficher
COKE	R4C	Valve	Externally Actuated	Light Liquid	Accessible	FALSE	1398	1 1/2"VALVES & 50SC EAST TAR TANK	30	1.5	Yes, equipment can be isolated from service	TRUE	FALSE	FALSE	40 CFR 61 Subpart L	UNCLASSIFIED	24-Oct-16	23-Nov-16	Andrew Ficher
COKE	R4D	Valve	Externally Actuated	Light Liquid	Accessible	FALSE	1399	1 1/2"VALVES & 50SC EAST TAR TANK	30	1.5	Yes, equipment can be isolated from service	TRUE	FALSE	FALSE	40 CFR 61 Subpart L	UNCLASSIFIED	24-Oct-16	23-Nov-16	Andrew Ficher
COKE	R5	Valve	Externally Actuated	Light Liquid	Accessible	FALSE	1390	(5) 1 1/2"VALVES & 50SC EAST TAR TANK	35	1.5	Yes, equipment can be isolated from service	TRUE	FALSE	FALSE	40 CFR 61 Subpart L	UNCLASSIFIED	24-Oct-16	23-Nov-16	Andrew Ficher
COKE	R50	Valve	Externally Actuated	Light Liquid	Accessible	FALSE	324	12" VALVE @ PROCESS WATER COOLING TOWER PUMPS W/2FL & 1WC	1P8	12	Yes, equipment can be isolated from service	TRUE	FALSE	FALSE	40 CFR 61 Subpart L	UNCLASSIFIED	24-Oct-16	23-Nov-16	ARAN PARKER
COKE	R500	Valve	Externally Actuated	Light Liquid	Accessible	FALSE	1476	MAIN FLARE OPPOSING SIDE 3" VALVE COG CONDENSATE @ FLARE W/3	06	3	Yes, equipment can be isolated from service	TRUE	FALSE	FALSE	40 CFR 61 Subpart L	UNCLASSIFIED	24-Oct-16	23-Nov-16	ARAN PARKER
COKE	R501	Pump	Standard Service	Light Liquid	Accessible	FALSE	953	PRIMARY COOLER CIRCULATION PUMP (STEAM)	02	0	Yes, equipment can be isolated from service	TRUE	FALSE	FALSE	40 CFR 61 Subpart L	UNCLASSIFIED	24-May-17	24-May-17	ARAN PARKER
COKE	R502	Pump	Standard Service	Light Liquid	Accessible	FALSE	1285	TAR LOADING PUMP	02	0	Unclassified	FALSE	FALSE	FALSE	40 CFR 61 Subpart L	UNCLASSIFIED	19-Sep-17	19-Sep-17	ARAN PARKER
COKE	R503	Valve	Externally Actuated	Light Liquid	Accessible	FALSE	1275	2" VALVE EAST TAR TANK BOTTOM W/2FL	03	2	Yes, equipment can be isolated from service	TRUE	FALSE	FALSE	40 CFR 61 Subpart L	UNCLASSIFIED	12-Dec-17	12-Dec-17	ARAN PARKER
COKE	R503A	Flange	Standard Service	Light Liquid	Accessible	FALSE	1275	3" VALVE EAST TAR TANK BOTTOM W/2FL	03	2	Yes, equipment can be isolated from service	TRUE	FALSE	FALSE	40 CFR 61 Subpart L	UNCLASSIFIED	12-Dec-17	12-Dec-17	ARAN PARKER
COKE	R503B	Flange	Standard Service	Light Liquid	Accessible	FALSE	1275	3" VALVE EAST TAR TANK BOTTOM W/2FL	03	2	Yes, equipment can be isolated from service	TRUE	FALSE	FALSE	40 CFR 61 Subpart L	UNCLASSIFIED	12-Dec-17	12-Dec-17	ARAN PARKER
COKE	R504	Valve	Externally Actuated	Light Liquid	Accessible	FALSE	1286	EAST TAR LOADING PUMPS	02	1	Unclassified	TRUE	FALSE	FALSE	40 CFR 61 Subpart L	UNCLASSIFIED	13-Mar-18	13-Mar-18	Matt Case
COKE	R505	Valve	Externally Actuated	Light Liquid	Accessible	FALSE	1286	EAST TAR LOADING PUMPS	05	0.5	Unclassified	TRUE	FALSE	FALSE	40 CFR 61 Subpart L	UNCLASSIFIED	13-Mar-18	13-Mar-18	Matt Case
COKE	R505.1	Connector	Standard Service	Light Liquid	Accessible	FALSE	1286	EAST TAR LOADING PUMPS	05	0.5	Unclassified	TRUE	FALSE	FALSE	40 CFR 61 Subpart L	UNCLASSIFIED	13-Mar-18	13-Mar-18	Matt Case
COKE	R505.2	Connector	Standard Service	Light Liquid	Accessible	FALSE	1286	EAST TAR LOADING PUMPS	05	0.5	Unclassified	TRUE	FALSE	FALSE	40 CFR 61 Subpart L	UNCLASSIFIED	13-Mar-18	13-Mar-18	Matt Case
COKE	R505.3	Connector	Standard Service	Light Liquid	Accessible	FALSE	1286	EAST TAR LOADING PUMPS	05	0.5	Unclassified	TRUE	FALSE	FALSE	40 CFR 61 Subpart L	UNCLASSIFIED	13-Mar-18	13-Mar-18	Matt Case
COKE	R505.4	Connector	Standard Service	Light Liquid	Accessible	FALSE	1286	EAST TAR LOADING PUMPS	05	0.5	Unclassified	TRUE	FALSE	FALSE	40 CFR 61 Subpart L	UNCLASSIFIED	13-Mar-18	13-Mar-18	Matt Case
COKE	R505.5	Connector	Standard Service	Light Liquid	Accessible	FALSE	1286	EAST TAR LOADING PUMPS	05	0.5	Unclassified	TRUE	FALSE	FALSE	40 CFR 61 Subpart L	UNCLASSIFIED	13-Mar-18	13-Mar-18	Matt Case
COKE	R505.6	Connector	Standard Service	Light Liquid	Accessible	FALSE	1286	EAST TAR LOADING PUMPS	05	0.5	Unclassified	TRUE	FALSE	FALSE	40 CFR 61 Subpart L	UNCLASSIFIED	13-Mar-18	13-Mar-18	Matt Case
COKE	R506	Valve	Externally Actuated	Light Liquid	Accessible	FALSE	1298	WEST TAR PUMP OUTLET	05	1.5	Yes, equipment can be isolated from service	TRUE	FALSE	FALSE	40 CFR 61 Subpart L	UNCLASSIFIED	13-Mar-18	13-Mar-18	Matt Case
COKE	R507	Valve	Externally Actuated	Light Liquid	Accessible	FALSE	1298	2FT N OF WEST TAR PUMP	06	2	Yes, equipment can be isolated from service	TRUE	FALSE	FALSE	40 CFR 61 Subpart L	UNCLASSIFIED	13-Mar-18	13-Mar-18	Matt Case
COKE	R508	Valve	Externally Actuated	Light Liquid	Accessible	FALSE	1298	2FT N OF WEST TAR PUMP	06	2	Yes, equipment can be isolated from service	TRUE	FALSE	FALSE	40 CFR 61 Subpart L	UNCLASSIFIED	13-Mar-18	13-Mar-18	Matt Case
COKE	R509	Valve	Externally Actuated	Light Liquid	Accessible	FALSE	1260	20 FT N OFTAR TANKS	07	1.5	Yes, equipment can be isolated from service	TRUE	FALSE	FALSE	40 CFR 61 Subpart L	UNCLASSIFIED	13-Mar-18	13-Mar-18	Matt Case
COKE	R51	Valve	Externally Actuated	Light Liquid	Accessible	FALSE	322	12" VALVE @ PROCESS WATER COOLING TOWER PUMPS W/2FL & 10WC	1P5	12	Yes, equipment can be isolated from service	TRUE	FALSE	FALSE	40 CFR 61 Subpart L	UNCLASSIFIED	24-Oct-16	23-Nov-16	ARAN PARKER
COKE	R510	Valve	Externally Actuated	Light Liquid	Accessible	FALSE	1260	20 FT N OFTAR TANKS	07	1.5	Yes, equipment can be isolated from service	TRUE	FALSE	FALSE	40 CFR 61 Subpart L	UNCLASSIFIED	13-Mar-18	13-Mar-18	Matt Case
COKE	R511	Valve	Externally Actuated	Light Liquid	Accessible	FALSE	1260	20 FT N OFTAR TANKS	07	1.5	Yes, equipment can be isolated from service	TRUE	FALSE	FALSE	40 CFR 61 Subpart L	UNCLASSIFIED	13-Mar-18	13-Mar-18	Matt Case
COKE	R512	Valve	Externally Actuated	Light Liquid	Accessible	FALSE	1260	20 FT N OFTAR TANKS	07	1.5	Yes, equipment can be isolated from service	TRUE	FALSE	FALSE	40 CFR 61 Subpart L	UNCLASSIFIED	13-Mar-18	13-Mar-18	Matt Case
COKE	R513	Valve	Externally Actuated	Light Liquid	Accessible	FALSE	1260.01	20 FT N OFTAR TANKS	07	1.5	Yes, equipment can be isolated from service	TRUE	FALSE	FALSE	40 CFR 61 Subpart L	UNCLASSIFIED	13-Mar-18	13-Mar-18	Matt Case
COKE	R514	Valve	Externally Actuated	Light Liquid	Accessible	FALSE	1260.01	20 FT N OFTAR TANKS	07	1.5	Yes, equipment can be isolated from service	TRUE	FALSE	FALSE	40 CFR 61 Subpart L	UNCLASSIFIED	13-Mar-18	13-Mar-18	Matt Case
COKE	R515	Valve	Externally Actuated	Light Liquid	Unsafe to Monitor	FALSE	0	20 FT NW OFTAR TANKS	030	1	Yes, equipment can be isolated from service	TRUE	FALSE	FALSE	40 CFR 61 Subpart L	UNCLASSIFIED	13-Mar-18	13-Mar-18	Matt Case
COKE	R516	Valve	Externally Actuated	Light Liquid	Accessible	FALSE	1286	2FT N OF WEST TAR LOADING PUMPS	02	1	Yes, equipment can be isolated from service	TRUE	FALSE	FALSE	40 CFR 61 Subpart L	UNCLASSIFIED	13-Mar-18	13-Mar-18	Matt Case
COKE	R517	Valve	Externally Actuated	Light Liquid	Accessible	FALSE	1298	2FT N OF EAST TAR PUMP	02	2	Yes, equipment can be isolated from service	TRUE	FALSE	FALSE	40 CFR 61 Subpart L	UNCLASSIFIED	13-Mar-18	13-Mar-18	Matt Case
COKE	R518	Valve	Externally Actuated	Light Liquid	Accessible	FALSE	1246	SW SIDE OF WEST TAR DECANTER	1-2	0.5	Yes, equipment can be isolated from service	TRUE	FALSE	FALSE	40 CFR 61 Subpart L	UNCLASSIFIED	13-Mar-18	13-Mar-18	Matt Case
COKE	R519	Valve	Externally Actuated	Light Liquid	Accessible	FALSE	1246	NW SIDE OF WEST TAR DECANTER	11	0.5	Yes, equipment can be isolated from service	TRUE	FALSE	FALSE	40 CFR 61 Subpart L	UNCLASSIFIED	13-Mar-18	13-Mar-18	Matt Case
COKE	R52	Valve	Externally Actuated	Light Liquid	Accessible	FALSE	317	½" VALVE & PRESS. GAUGE @ PROCESS WATER COOLING TOWER PUMPS	04	0.5	Yes, equipment can be isolated from service	TRUE	FALSE	FALSE	40 CFR 61 Subpart L	UNCLASSIFIED	24-Oct-16	23-Nov-16	ARAN PARKER
COKE	R520	Valve	Externally Actuated	Light Liquid	Accessible	FALSE	1145	2FT S OF FLUSHING LIQUOR STRAINER	015	1.5	Yes, equipment can be isolated from service	TRUE	FALSE	FALSE	40 CFR 61 Subpart L	UNCLASSIFIED	13-Mar-18	13-Mar-18	Matt Case
COKE	R521	Valve	Externally Actuated	Light Liquid	Accessible	FALSE	1145	2FT S OF FLUSHING LIQUOR STRAINER	014	0.5	Unclassified	TRUE	FALSE	FALSE	40 CFR 61 Subpart L	UNCLASSIFIED	13-Mar-18	13-Mar-18	Matt Case
COKE	R522	Valve	Externally Actuated	Light Liquid	Accessible	FALSE	1145	25FT S OF LITTLE GAS HOLDER	015	1.5	Unclassified	TRUE	FALSE	FALSE	40 CFR 61 Subpart L	UNCLASSIFIED	13-Mar-18	13-Mar-18	Matt Case
COKE	R523	Valve	Externally Actuated	Light Liquid	Accessible	FALSE	1145	25FT S OF LITTLE GAS HOLDER	015	1.5	Unclassified	TRUE	FALSE	FALSE	40 CFR 61 Subpart L	UNCLASSIFIED	13-Mar-18	13-Mar-18	Matt Case
COKE	R524	Valve	Externally Actuated	Light Liquid	Accessible	FALSE	1145	25FT S OF LITTLE GAS HOLDER	015	1.5	Unclassified	TRUE	FALSE	FALSE	40 CFR 61 Subpart L	UNCLASSIFIED	13-Mar-18	13-Mar-18	Matt Case
COKE	R525	Valve	Externally Actuated	Light Liquid	Accessible	FALSE	1145	25FT S OF LITTLE GAS HOLDER	015	1.5	Unclassified	TRUE	FALSE	FALSE	40 CFR 61 Subpart L	UNCLASSIFIED	13-Mar-18	13-Mar-18	Matt Case
COKE	R526	Valve	Externally Actuated	Light Liquid	Accessible	FALSE	1007	2FT E OF #8 SPIRAL COOLER @ PRIMARY COOLER	04	0.5	Yes, equipment can be isolated from service	TRUE	FALSE	FALSE	40 CFR 61 Subpart L	UNCLASSIFIED	13-Mar-18	13-Mar-18	Matt Case
COKE	R527	Valve	Externally Actuated	Light Liquid	Accessible	FALSE	1007	2FT E OF #8 SPIRAL COOLER @ PRIMARY COOLER	03	2	Yes, equipment can be isolated from service	TRUE	FALSE	FALSE	40 CFR 61 Subpart L	UNCLASSIFIED	13-Mar-18	13-Mar-18	Matt Case
COKE	R528	Valve	Externally Actuated	Light Liquid	Accessible	FALSE	1007	2FT E OF #8 SPIRAL COOLER @ PRIMARY COOLER	03	2	Yes, equipment can be isolated from service	TRUE	FALSE	FALSE	40 CFR 61 Subpart L	UNCLASSIFIED	13-Mar-18	13-Mar-18	Matt Case
COKE	R529	Valve	Externally Actuated	Light Liquid	Accessible	FALSE	1007	2FT E OF #8 SPIRAL COOLER @ PRIMARY COOLER	04	2	Yes, equipment can be isolated from service	TRUE	FALSE	FALSE	40 CFR 61 Subpart L	UNCLASSIFIED	13-Mar-18	13-Mar-18	Matt Case
COKE	R53	Valve	Externally Actuated	Light Liquid	Accessible	FALSE	319	12" VALVE @ PROCESS WATER COOLING TOWER PUMPS W/2FL & 4WC	010	12	Yes, equipment can be isolated from service	TRUE	FALSE	FALSE	40 CFR 61 Subpart L	UNCLASSIFIED	24-Oct-16	23-Nov-16	ARAN PARKER
COKE	R530	Valve	Externally Actuated	Light Liquid	Accessible	FALSE	1002	SPIRAL COOLER @ PRIMARY COOLER INLET	09	0.8	Yes, equipment can be isolated from service	TRUE	FALSE	FALSE	40 CFR 61 Subpart L	UNCLASSIFIED	13-Mar-18	13-Mar-18	Matt Case
COKE	R531	Valve	Externally Actuated	Light Liquid	Accessible	FALSE	988.001	½" VALVES NORTH PRIMARY COOLER RE-SPRAY PUMP INLET	02	0.5	Yes, equipment can be isolated from service	TRUE	FALSE	FALSE	40 CFR 61 Subpart L	UNCLASSIFIED	13-Mar-18	13-Mar-18	Matt Case
COKE	R532	Valve	Externally Actuated	Light Liquid	Accessible	FALSE	1007.01	2FT E OF #8 SPIRAL COOLER @ PRIMARY COOLER OFF HANDRAIL	2P2	6	Yes, equipment can be isolated from service	TRUE	FALSE	FALSE	40 CFR 61 Subpart L	UNCLASSIFIED	13-Mar-18	13-Mar-18	Matt Case
COKE	R533	Pump	Standard Service	Light Liquid	Accessible	FALSE	1046	AIR DIAPHRAGM SEAL PUMP AT LITTLE HOLDER	00	0	Yes, equipment can be isolated from service	TRUE	FALSE	FALSE	40 CFR 61 Subpart L	UNCLASSIFIED	13-Mar-18	13-Mar-18	Matt Case
COKE	R534	Valve	Externally Actuated	Light Liquid	Accessible	FALSE	147.002	3"VALVE LIQUOR LINE NORTH PRIMARY COOLER	29	3	Yes, equipment can be isolated from service	TRUE	FALSE	FALSE	40 CFR 61 Subpart L	UNCLASSIFIED	14-Mar-18	14-Mar-18	Brent Birdwell
COKE	R535	Valve	Externally Actuated	Light Liquid	Accessible	FALSE	162.003	LIQUOR LINE INLET NORTH PRIMARY COOLER	39	0.5	Yes, equipment can be isolated from service	TRUE	FALSE	FALSE	40 CFR 61 Subpart L	UNCLASSIFIED	14-Mar-18	14-Mar-18	Matt Case
COKE	R536	Valve	Externally Actuated	Light Liquid	Accessible	FALSE	149.002	LIQUOR LINE SOUTH PRIMARY COOLER	23	3	Yes, equipment can be isolated from service	TRUE	FALSE	FALSE	40 CFR 61 Subpart L	UNCLASSIFIED	14-Mar-18	14-Mar-18	Matt Case
COKE	R537	Valve	Externally Actuated	Light Liquid	Accessible	FALSE	162.004	LIQUOR LINE INLET NORTH PRIMARY COOLER	39	0.5	Yes, equipment can be isolated from service	TRUE	FALSE	FALSE	40 CFR 61 Subpart L	UNCLASSIFIED	14-Mar-18	14-Mar-18	Matt Case
COKE	R538	Valve	Externally Actuated	Light Liquid	Accessible	FALSE	148.001	8" VALVE LIQUOR LINE @ PRIMARY COOLERS	28	8	Yes, equipment can be isolated from service	TRUE	FALSE	FALSE	40 CFR 61 Subpart L	UNCLASSIFIED	14-Mar-18	14-Mar-18	Matt Case
COKE	R539	Valve	Externally Actuated	Light Liquid	Accessible	FALSE	148.002	LIQUOR LINE @ PRIMARY COOLERS	29	0.5	Yes, equipment can be isolated from service	TRUE	FALSE	FALSE	40 CFR 61 Subpart L	UNCLASSIFIED	14-Mar-18	14-Mar-18	Matt Case
COKE	R54	Pump	Standard Service	Light Liquid	Accessible	FALSE	321	PUMP @ PROCESS WATER COOLING TOWER	04	0	Yes, equipment can be isolated from service	TRUE	FALSE	FALSE	40 CFR 61 Subpart L	UNCLASSIFIED	24-Oct-16	23-Nov-16	ARAN PARKER
COKE	R540	Valve	Externally Actuated	Light Liquid	Accessible	FALSE	149.003	LIQUOR LINE SOUTH PRIMARY COOLER	212	8	Yes, equipment can be isolated from service	TRUE	FALSE	FALSE	40 CFR 61 Subpart L	UNCLASSIFIED	14-Mar-18	14-Mar-18	Matt Case
COKE	R541	Valve	Externally Actuated	Light Liquid	Accessible	FALSE	149.004	LIQUOR LINE SOUTH PRIMARY COOLER	212	8	Yes, equipment can be isolated from service	TRUE	FALSE	FALSE	40 CFR 61 Subpart L	UNCLASSIFIED	14-Mar-18	14-Mar-18	Matt Case
COKE	R542	Valve	Externally Actuated	Light Liquid	Accessible	FALSE	149.005	LIQUOR LINE SOUTH PRIMARY COOLER	214	0.5	Yes, equipment can be isolated from service	TRUE	FALSE	FALSE	40 CFR 61 Subpart L	UNCLASSIFIED	14-Mar-18	14-Mar-18	Matt Case
COKE	R543	Valve	Externally Actuated	Light Liquid	Accessible	FALSE	149.006	LIQUOR LINE SOUTH PRIMARY COOLER	21P3	3	Yes, equipment can be isolated from service	TRUE	FALSE	FALSE	40 CFR 61 Subpart L	UNCLASSIFIED	14-Mar-18	14-Mar-18	Matt Case
COKE	R544	Valve	Externally Actuated	Light Liquid	Accessible	FALSE	149.007	LIQUOR LINE SOUTH PRIMARY COOLER	21P3	3	Yes, equipment can be isolated from service	TRUE	FALSE	FALSE	40 CFR 61 Subpart L	UNCLASSIFIED	14-Mar-18	14-Mar-18	Matt Case

UNIT_CODE	TAG_NUMBER	EQUITYPE_DESC	CONFIG_DESC	SERVICE_DESC	ACCESS_DESC	CLOSED_VENT_SYSTEM	ROUTE	LOCATION	LEVEL	SIZE	IFSTYPE_DESC	ATTEMPT_ALLOWED	UNDER_300_HOURS_SERVICE	POTENTIAL_OPEN_END	GROUP_DESC	PRODUCT_DESC	DATE_ADDED	DATE_IN_SERVICE	TECH_DESC
COKE	R545	Valve	Externally Actuated	Light Liquid	Accessible	FALSE	149.008	LIQUOR LINE SOUTH PRIMARY COOLER	21P3	3	Yes, equipment can be isolated from service	TRUE	FALSE	FALSE	40 CFR 61 Subpart L	UNCLASSIFIED	14-Mar-18	14-Mar-18	Matt Case
COKE	R546	Valve	Externally Actuated	Light Liquid	Accessible	FALSE	149.009	LIQUOR LINE NORTH PRIMARY COOLER	21P3	3	Yes, equipment can be isolated from service	TRUE	FALSE	FALSE	40 CFR 61 Subpart L	UNCLASSIFIED	14-Mar-18	14-Mar-18	Matt Case
COKE	R547	Valve	Externally Actuated	Light Liquid	Accessible	FALSE	149.01	LIQUOR LINE NORTH PRIMARY COOLER	21P3	3	Yes, equipment can be isolated from service	TRUE	FALSE	FALSE	40 CFR 61 Subpart L	UNCLASSIFIED	14-Mar-18	14-Mar-18	Matt Case
COKE	R548	Valve	Externally Actuated	Light Liquid	Accessible	FALSE	149.011	LIQUOR LINE NORTH PRIMARY COOLER	21P3	3	Yes, equipment can be isolated from service	TRUE	FALSE	FALSE	40 CFR 61 Subpart L	UNCLASSIFIED	14-Mar-18	14-Mar-18	Matt Case
COKE	R549	Valve	Externally Actuated	Light Liquid	Accessible	FALSE	162.001	3" VALVE LIQUOR LINE INLET NORTH PRIMARY COOLER	37	3	Yes, equipment can be isolated from service	TRUE	FALSE	FALSE	40 CFR 61 Subpart L	UNCLASSIFIED	14-Mar-18	14-Mar-18	Matt Case
COKE	R55	Valve	Externally Actuated	Light Liquid	Accessible	FALSE	320	14" VALVE @ PROCESS WATER COOLING TOWER PUMPS W/4FL & 7WC	08	14	Yes, equipment can be isolated from service	TRUE	FALSE	FALSE	40 CFR 61 Subpart L	UNCLASSIFIED	24-Oct-16	23-Nov-16	ARAN PARKER
COKE	R550	Valve	Externally Actuated	Light Liquid	Accessible	FALSE	162.002	8" VALVE LIQUOR LINE INLET NORTH PRIMARY COOLER	39	8	Yes, equipment can be isolated from service	TRUE	FALSE	FALSE	40 CFR 61 Subpart L	UNCLASSIFIED	14-Mar-18	14-Mar-18	Matt Case
COKE	R551	Valve	Externally Actuated	Light Liquid	Accessible	FALSE	162.005	LIQUOR LINE INLET SOUTH PRIMARY COOLER	39	3	Yes, equipment can be isolated from service	TRUE	FALSE	FALSE	40 CFR 61 Subpart L	UNCLASSIFIED	14-Mar-18	14-Mar-18	Matt Case
COKE	R552	Valve	Externally Actuated	Light Liquid	Accessible	FALSE	162.006	LIQUOR LINE INLET SOUTH PRIMARY COOLER	39	0.5	Yes, equipment can be isolated from service	TRUE	FALSE	FALSE	40 CFR 61 Subpart L	UNCLASSIFIED	14-Mar-18	14-Mar-18	Matt Case
COKE	R553	Valve	Externally Actuated	Light Liquid	Accessible	FALSE	162.007	LIQUOR LINE INLET SOUTH PRIMARY COOLER	39	8	Yes, equipment can be isolated from service	TRUE	FALSE	FALSE	40 CFR 61 Subpart L	UNCLASSIFIED	14-Mar-18	14-Mar-18	Matt Case
COKE	R554	Valve	Externally Actuated	Light Liquid	Accessible	FALSE	163.001	3" VALVE LIQUOR LINE INLET SOUTH PRIMARY COOLER	31P4	3	Yes, equipment can be isolated from service	TRUE	FALSE	FALSE	40 CFR 61 Subpart L	UNCLASSIFIED	14-Mar-18	14-Mar-18	Matt Case
COKE	R555	Valve	Externally Actuated	Light Liquid	Accessible	FALSE	163.002	LIQUOR LINE INLET SOUTH PRIMARY COOLER	31P4	0.5	Yes, equipment can be isolated from service	TRUE	FALSE	FALSE	40 CFR 61 Subpart L	UNCLASSIFIED	14-Mar-18	14-Mar-18	Matt Case
COKE	R556	Valve	Externally Actuated	Light Liquid	Accessible	FALSE	163.003	3" VALVE LIQUOR LINE INLET SOUTH PRIMARY COOLER	31P4	3	Yes, equipment can be isolated from service	TRUE	FALSE	FALSE	40 CFR 61 Subpart L	UNCLASSIFIED	14-Mar-18	14-Mar-18	Matt Case
COKE	R557	Valve	Externally Actuated	Light Liquid	Accessible	FALSE	163.004	3" VALVE LIQUOR LINE INLET SOUTH PRIMARY COOLER	31P4	3	Yes, equipment can be isolated from service	TRUE	FALSE	FALSE	40 CFR 61 Subpart L	UNCLASSIFIED	14-Mar-18	14-Mar-18	Matt Case
COKE	R558	Valve	Externally Actuated	Light Liquid	Accessible	FALSE	163.005	3" VALVE LIQUOR LINE INLET SOUTH PRIMARY COOLER	31P4	3	Yes, equipment can be isolated from service	TRUE	FALSE	FALSE	40 CFR 61 Subpart L	UNCLASSIFIED	14-Mar-18	14-Mar-18	Matt Case
COKE	R559	Valve	Externally Actuated	Light Liquid	Accessible	FALSE	163.006	3" VALVE LIQUOR LINE INLET NORTH PRIMARY COOLER	31P4	3	Yes, equipment can be isolated from service	TRUE	FALSE	FALSE	40 CFR 61 Subpart L	UNCLASSIFIED	14-Mar-18	14-Mar-18	Matt Case
COKE	R56	Valve	Externally Actuated	Light Liquid	Accessible	FALSE	318	14" VALVE @ PROCESS WATER DECANTER W/3FL & 8WC	08	14	Yes, equipment can be isolated from service	TRUE	FALSE	FALSE	40 CFR 61 Subpart L	UNCLASSIFIED	24-Oct-16	23-Nov-16	ARAN PARKER
COKE	R560	Valve	Externally Actuated	Light Liquid	Accessible	FALSE	163.007	3" VALVE LIQUOR LINE INLET NORTH PRIMARY COOLER	31P4	3	Yes, equipment can be isolated from service	TRUE	FALSE	FALSE	40 CFR 61 Subpart L	UNCLASSIFIED	14-Mar-18	14-Mar-18	Matt Case
COKE	R561	Valve	Externally Actuated	Light Liquid	Accessible	FALSE	163.008	3" VALVE LIQUOR LINE INLET NORTH PRIMARY COOLER	31P4	3	Yes, equipment can be isolated from service	TRUE	FALSE	FALSE	40 CFR 61 Subpart L	UNCLASSIFIED	14-Mar-18	14-Mar-18	Matt Case
COKE	R562	Valve	Externally Actuated	Light Liquid	Accessible	FALSE	163.009	3" VALVE LIQUOR LINE INLET NORTH PRIMARY COOLER	31P4	3	Yes, equipment can be isolated from service	TRUE	FALSE	FALSE	40 CFR 61 Subpart L	UNCLASSIFIED	14-Mar-18	14-Mar-18	Matt Case
COKE	R563	Valve	Externally Actuated	Light Liquid	Accessible	FALSE	1095	PRIMARY COOLER SUMP	09	0.5	Yes, equipment can be isolated from service	TRUE	FALSE	FALSE	40 CFR 61 Subpart L	UNCLASSIFIED	15-Mar-18	15-Mar-18	Brent Birdwell
COKE	R564	Valve	Externally Actuated	Light Liquid	Accessible	FALSE	503	½" VALVES #10 SPIRAL COOLER @ PRIMARY COOLER OUT. W/3FL, 13	03	0.5	Yes, equipment can be isolated from service	TRUE	FALSE	FALSE	40 CFR 61 Subpart L	UNCLASSIFIED	24-Oct-16	23-Nov-16	Matt Case
COKE	R565	Valve	Externally Actuated	Light Liquid	Accessible	FALSE	502	1 ½" VALVES #10 SPIRAL COOLER @ PRIMARY COOLER OUT. W/3FL, 1	03	1.5	Yes, equipment can be isolated from service	TRUE	FALSE	FALSE	40 CFR 61 Subpart L	UNCLASSIFIED	24-Oct-16	23-Nov-16	Matt Case
COKE	R566	Valve	Externally Actuated	Light Liquid	Accessible	FALSE	1020	4" DRAIN FROM PRECIPITATOR (B) ¾ "VALVE	02	0.8	Yes, equipment can be isolated from service	TRUE	FALSE	FALSE	40 CFR 61 Subpart L	UNCLASSIFIED	15-Mar-18	15-Mar-18	Matt Case
COKE	R567	Valve	Externally Actuated	Light Liquid	Accessible	FALSE	1020	4" DRAIN FROM PRECIPITATOR (B) ¾ "VALVE	02	0.8	Yes, equipment can be isolated from service	TRUE	FALSE	FALSE	40 CFR 61 Subpart L	UNCLASSIFIED	15-Mar-18	15-Mar-18	Matt Case
COKE	R568	Valve	Externally Actuated	Light Liquid	Accessible	FALSE	1020	4" DRAIN FROM PRECIPITATOR (B) ¾ "VALVE	02	0.8	Yes, equipment can be isolated from service	TRUE	FALSE	FALSE	40 CFR 61 Subpart L	UNCLASSIFIED	15-Mar-18	15-Mar-18	Matt Case
COKE	R569	Valve	Externally Actuated	Light Liquid	Accessible	FALSE	1020	4" DRAIN FROM PRECIPITATOR (B) ¾ "VALVE	02	0.8	Yes, equipment can be isolated from service	TRUE	FALSE	FALSE	40 CFR 61 Subpart L	UNCLASSIFIED	15-Mar-18	15-Mar-18	Matt Case
COKE	R57	Valve	Externally Actuated	Light Liquid	Accessible	FALSE	313	½" VALVE @ PROCESS WATER COOLING TOWER PUMPS W/4FL, 6WC & 6S	03	0.5	Yes, equipment can be isolated from service	TRUE	FALSE	FALSE	40 CFR 61 Subpart L	UNCLASSIFIED	24-Oct-16	23-Nov-16	ARAN PARKER
COKE	R570	Valve	Externally Actuated	Light Liquid	Accessible	FALSE	1020.01	4" DRAIN FROM PRECIPITATOR (B) ¾ "VALVE	02	0.8	Yes, equipment can be isolated from service	TRUE	FALSE	FALSE	40 CFR 61 Subpart L	UNCLASSIFIED	15-Mar-18	15-Mar-18	Matt Case
COKE	R571	Valve	Externally Actuated	Light Liquid	Accessible	FALSE	1024	3" PIPE W/2FL, 1/2"VALVE, 4SC & 4WC	03	0.5	Yes, equipment can be isolated from service	TRUE	FALSE	FALSE	40 CFR 61 Subpart L	UNCLASSIFIED	15-Mar-18	15-Mar-18	Matt Case
COKE	R572	Valve	Externally Actuated	Light Liquid	Accessible	FALSE	1024	3" PIPE W/2FL, 1/2"VALVE, 4SC & 4WC	03	0.5	Yes, equipment can be isolated from service	TRUE	FALSE	FALSE	40 CFR 61 Subpart L	UNCLASSIFIED	15-Mar-18	15-Mar-18	Matt Case
COKE	R573	Valve	Externally Actuated	Light Liquid	Accessible	FALSE	1024	3" PIPE W/2FL, 1/2"VALVE, 4SC & 4WC	03	0.5	Yes, equipment can be isolated from service	TRUE	FALSE	FALSE	40 CFR 61 Subpart L	UNCLASSIFIED	15-Mar-18	15-Mar-18	Matt Case
COKE	R574	Valve	Externally Actuated	Light Liquid	Accessible	FALSE	1024	3" PIPE W/2FL, 1/2"VALVE, 4SC & 4WC	03	0.5	Yes, equipment can be isolated from service	TRUE	FALSE	FALSE	40 CFR 61 Subpart L	UNCLASSIFIED	15-Mar-18	15-Mar-18	Matt Case
COKE	R575	Valve	Externally Actuated	Light Liquid	Accessible	FALSE	743.008	LINE FROM PURIFIER	08	1	Yes, equipment can be isolated from service	TRUE	FALSE	FALSE	40 CFR 61 Subpart L	UNCLASSIFIED	16-Mar-18	16-Mar-18	Matt Case
COKE	R576	Valve	Externally Actuated	Light Liquid	Accessible	FALSE	743.009	LINE FROM PURIFIER	08	1	Yes, equipment can be isolated from service	TRUE	FALSE	FALSE	40 CFR 61 Subpart L	UNCLASSIFIED	16-Mar-18	16-Mar-18	Matt Case
COKE	R577	Valve	Externally Actuated	Light Liquid	Accessible	FALSE	743.01	LINE FROM PURIFIER	08	1	Yes, equipment can be isolated from service	TRUE	FALSE	FALSE	40 CFR 61 Subpart L	UNCLASSIFIED	16-Mar-18	16-Mar-18	Matt Case
COKE	R578	Valve	Externally Actuated	Light Liquid	Accessible	FALSE	755.001	LINE FROM PURIFIER 15FT NW OF PURIFIER	05	1	Yes, equipment can be isolated from service	TRUE	FALSE	FALSE	40 CFR 61 Subpart L	UNCLASSIFIED	16-Mar-18	16-Mar-18	Matt Case
COKE	R579	Valve	Externally Actuated	Light Liquid	Accessible	FALSE	859.002	2FT N OF WEST SCRUBBER BOTTOM	07	0.5	Yes, equipment can be isolated from service	TRUE	FALSE	FALSE	40 CFR 61 Subpart L	UNCLASSIFIED	16-Mar-18	16-Mar-18	Matt Case
COKE	R58	Valve	Externally Actuated	Light Liquid	Accessible	FALSE	314	12" VALVE @ PROCESS WATER COOLING TOWER PUMPS W/2FL & 3WC	010	12	Yes, equipment can be isolated from service	TRUE	FALSE	FALSE	40 CFR 61 Subpart L	UNCLASSIFIED	24-Oct-16	23-Nov-16	ARAN PARKER
COKE	R580	Valve	Externally Actuated	Light Liquid	Accessible	FALSE	859.001	2FT N OF WEST SCRUBBER BOTTOM	07	1	Yes, equipment can be isolated from service	TRUE	FALSE	FALSE	40 CFR 61 Subpart L	UNCLASSIFIED	16-Mar-18	16-Mar-18	Matt Case
COKE	R581	Valve	Externally Actuated	Light Liquid	Accessible	FALSE	841.001	PORTABLE DITCH PUMP @ SCRUBBERS	01	1.5	Yes, equipment can be isolated from service	TRUE	FALSE	FALSE	40 CFR 61 Subpart L	UNCLASSIFIED	16-Mar-18	16-Mar-18	Matt Case
COKE	R582	Valve	Externally Actuated	Light Liquid	Accessible	FALSE	859.003	10FT NE OF WEST SCRUBBER BOTTOM	05	0.5	Yes, equipment can be isolated from service	TRUE	FALSE	FALSE	40 CFR 61 Subpart L	UNCLASSIFIED	16-Mar-18	16-Mar-18	Matt Case
COKE	R583	Valve	Externally Actuated	Light Liquid	Accessible	FALSE	859.004	5FT N OF EAST SCRUBBER BOTTOM	05	0.8	Yes, equipment can be isolated from service	TRUE	FALSE	FALSE	40 CFR 61 Subpart L	UNCLASSIFIED	16-Mar-18	16-Mar-18	Matt Case
COKE	R584	Valve	Externally Actuated	Light Liquid	Accessible	FALSE	859.005	5FT NE OF EAST SCRUBBER BOTTOM	05	0.8	Yes, equipment can be isolated from service	TRUE	FALSE	FALSE	40 CFR 61 Subpart L	UNCLASSIFIED	16-Mar-18	16-Mar-18	Matt Case
COKE	R585	Valve	Externally Actuated	Light Liquid	Accessible	FALSE	859.006	5FT NE OF EAST SCRUBBER BOTTOM	05	0.5	Yes, equipment can be isolated from service	TRUE	FALSE	FALSE	40 CFR 61 Subpart L	UNCLASSIFIED	16-Mar-18	16-Mar-18	Matt Case
COKE	R586	Valve	Externally Actuated	Light Liquid	Accessible	FALSE	859.007	5FT NE OF EAST SCRUBBER BOTTOM	05	0.5	Yes, equipment can be isolated from service	TRUE	FALSE	FALSE	40 CFR 61 Subpart L	UNCLASSIFIED	16-Mar-18	16-Mar-18	Matt Case
COKE	R587	Valve	Externally Actuated	Light Liquid	Accessible	FALSE	873.003	WASH OIL LINE TO L.O STILL @ EAST SCRUBBER	06	0.5	Yes, equipment can be isolated from service	TRUE	FALSE	FALSE	40 CFR 61 Subpart L	UNCLASSIFIED	16-Mar-18	16-Mar-18	Matt Case
COKE	R588	Valve	Externally Actuated	Light Liquid	Accessible	FALSE	873.001	WASH OIL LINE TO L.O STILL @ EAST SCRUBBER	06	0.5	Yes, equipment can be isolated from service	TRUE	FALSE	FALSE	40 CFR 61 Subpart L	UNCLASSIFIED	16-Mar-18	16-Mar-18	Matt Case
COKE	R589	Valve	Externally Actuated	Light Liquid	Accessible	FALSE	873.002	WASH OIL LINE TO L.O STILL @ EAST SCRUBBER	05	0.5	Yes, equipment can be isolated from service	TRUE	FALSE	FALSE	40 CFR 61 Subpart L	UNCLASSIFIED	16-Mar-18	16-Mar-18	Matt Case
COKE	R59	Pump	Standard Service	Light Liquid	Accessible	FALSE	316	PUMP @ PROCESS WATER COOLING TOWER	04	0	Yes, equipment can be isolated from service	TRUE	FALSE	FALSE	40 CFR 61 Subpart L	UNCLASSIFIED	24-Oct-16	23-Nov-16	ARAN PARKER
COKE	R590	Valve	Externally Actuated	Light Liquid	Accessible	FALSE	794.003	2FT N OF WEST SCRUBBER BOTTOM	07	0.5	Yes, equipment can be isolated from service	TRUE	FALSE	FALSE	40 CFR 61 Subpart L	UNCLASSIFIED	16-Mar-18	16-Mar-18	Matt Case
COKE	R591	Valve	Externally Actuated	Light Liquid	Accessible	FALSE	794.001	8FT NW OF WEST SCRUBBER BOTTOM 2FT E OS SPIRAL COOLER #2	05	0.5	Yes, equipment can be isolated from service	TRUE	FALSE	FALSE	40 CFR 61 Subpart L	UNCLASSIFIED	16-Mar-18	16-Mar-18	Matt Case
COKE	R592	Valve	Externally Actuated	Light Liquid	Accessible	FALSE	794.002	8FT NW OF WEST SCRUBBER BOTTOM 2FT E OS SPIRAL COOLER #2	05	0.5	Yes, equipment can be isolated from service	TRUE	FALSE	FALSE	40 CFR 61 Subpart L	UNCLASSIFIED	16-Mar-18	16-Mar-18	Matt Case
COKE	R593	Valve	Externally Actuated	Light Liquid	Accessible	FALSE	795.001	2 FT E OF #3 WASH OIL SCRUBBER SPIRAL COOLER OUTLET	05	1	Yes, equipment can be isolated from service	TRUE	FALSE	FALSE	40 CFR 61 Subpart L	UNCLASSIFIED	16-Mar-18	16-Mar-18	Matt Case
COKE	R594	Valve	Externally Actuated	Light Liquid	Accessible	FALSE	836.002	VALVE & LEVEL GAUGE EAST SCRUBBER BOTTOM	02	0.5	Yes, equipment can be isolated from service	TRUE	FALSE	FALSE	40 CFR 61 Subpart L	UNCLASSIFIED	16-Mar-18	16-Mar-18	Matt Case
COKE	R595	Valve	Externally Actuated	Light Liquid	Accessible	FALSE	836.001	VALVE & LEVEL GAUGE EAST SCRUBBER BOTTOM	02	0.5	Yes, equipment can be isolated from service	TRUE	FALSE	FALSE	40 CFR 61 Subpart L	UNCLASSIFIED	16-Mar-18	16-Mar-18	Matt Case
COKE	R596	Valve	Externally Actuated	Light Liquid	Accessible	FALSE	836.003	VALVE & LEVEL GAUGE EAST SCRUBBER BOTTOM	02	0.5	Yes, equipment can be isolated from service	TRUE	FALSE	FALSE	40 CFR 61 Subpart L	UNCLASSIFIED	16-Mar-18	16-Mar-18	Matt Case
COKE	R597	Valve	Externally Actuated	Light Liquid	Accessible	FALSE	745.001	COG CONDENSATE @ PRIMARY WEST	03	4	Yes, equipment can be isolated from service	TRUE	FALSE	FALSE	40 CFR 61 Subpart L	UNCLASSIFIED	16-Mar-18	16-Mar-18	Matt Case
COKE	R598	Valve	Externally Actuated	Light Liquid	Accessible	FALSE	745.002	COG CONDENSATE @ PRIMARY WEST	03	0.5	Yes, equipment can be isolated from service	TRUE	FALSE	FALSE	40 CFR 61 Subpart L	UNCLASSIFIED	16-Mar-18	16-Mar-18	Matt Case
COKE	R599	Valve	Externally Actuated	Light Liquid	Accessible	FALSE	745.003	COG CONDENSATE @ PRIMARY WEST	03	0.5	Yes, equipment can be isolated from service	TRUE	FALSE	FALSE	40 CFR 61 Subpart L	UNCLASSIFIED	16-Mar-18	16-Mar-18	Matt Case
COKE	R5A	Valve	Externally Actuated	Light Liquid	Accessible	FALSE	1391	1 1/2"VALVES & 50SC EAST TAR TANK	35	1.5	Yes, equipment can be isolated from service	TRUE	FALSE	FALSE	40 CFR 61 Subpart L	UNCLASSIFIED	24-Oct-16	23-Nov-16	ARAN PARKER
COKE	R5B	Valve	Externally Actuated	Light Liquid	Accessible	FALSE	1392	1 1/2"VALVES & 50SC EAST TAR TANK	35	1.5	Yes, equipment can be isolated from service	TRUE	FALSE	FALSE	40 CFR 61 Subpart L	UNCLASSIFIED	24-Oct-16	23-Nov-16	Andrew Ficher
COKE	R5C	Valve	Externally Actuated	Light Liquid	Accessible	FALSE	1393	1 1/2"VALVES & 50SC EAST TAR TANK	35	1.5	Yes, equipment can be isolated from service	TRUE	FALSE	FALSE	40 CFR 61 Subpart L	UNCLASSIFIED	24-Oct-16	23-Nov-16	Andrew Ficher
COKE	R5D	Valve	Externally Actuated	Light Liquid	Accessible	FALSE	1394	1 1/2"VALVES & 50SC EAST TAR TANK	35	1.5	Yes, equipment can be isolated from service	TRUE	FALSE	FALSE	40 CFR 61 Subpart L	UNCLASSIFIED	24-Oct-16	23-Nov-16	Andrew Ficher
COKE	R6	Valve	Externally Actuated	Light Liquid	Accessible	FALSE	752	4"VALVE BOTTOM OF PURIFIER W/3FL & 2WC	02	4	Yes, equipment can be isolated from service	TRUE	FALSE	FALSE	40 CFR 61 Subpart L	UNCLASSIFIED	24-Oct-16	23-Nov-16	ARAN PARKER
COKE	R60	Valve	Externally Actuated	Light Liquid	Accessible	FALSE	315	¾" VALVE @ PROCESS WATER COOLING TOWER PUMPS W/1WC & 7SC	09	0.8	Yes, equipment can be isolated from service	TRUE	FALSE	FALSE	40 CFR 61 Subpart L	UNCLASSIFIED	24-Oct-16	23-Nov-16	ARAN PARKER
COKE	R600	Valve	Externally Actuated	Light Liquid	Accessible	FALSE	664.001	COG CONDENSATE WITH 4 VALVES @ PRIMARY WEST	04	2	Yes, equipment can be isolated from service	TRUE	FALSE	FALSE	40 CFR 61 Subpart L	UNCLASSIFIED	16-Mar-18	16-Mar-18	Brent Birdwell
COKE	R601	Valve	Externally Actuated	Light Liquid	Accessible	FALSE	664.002	COG CONDENSATE WITH 4 VALVES @ PRIMARY WEST	04	1	Yes, equipment can be isolated from service	TRUE	FALSE	FALSE	40 CFR 61 Subpart L	UNCLASSIFIED	16-Mar-18	16-Mar-18	Brent Birdwell
COKE	R602	Valve	Externally Actuated	Light Liquid	Accessible	FALSE	664.003	COG CONDENSATE WITH 4 VALVES @ PRIMARY WEST	05	0.8	Yes, equipment can be isolated from service	TRUE	FALSE	FALSE	40 CFR 61 Subpart L	UNCLASSIFIED	16-Mar-18	16-Mar-18	Brent Birdwell
COKE	R603	Valve	Externally Actuated	Light Liquid	Accessible	FALSE	664.004	COG CONDENSATE WITH 4 VALVES @ PRIMARY WEST	04	1	Yes, equipment can be isolated from service	TRUE	FALSE	FALSE	40 CFR 61 Subpart L	UNCLASSIFIED	16-Mar-18	16-Mar-18	Brent Birdwell
COKE	R604	Valve	Externally Actuated	Light Liquid	Accessible	FALSE	8610	1" VALVE & LEVEL GAUGE WEST SCRUBBER BOTTOM	03	1	Yes, equipment can be isolated from service	TRUE	FALSE	FALSE	40 CFR 61 Subpart L	UNCLASSIFIED	21-Mar-18	21-Mar-18	Matt Case
COKE	R605	Valve	Externally Actuated	Light Liquid	Accessible	FALSE	8610	1" VALVE & LEVEL GAUGE WEST SCRUBBER BOTTOM	03	0.5	Yes, equipment can be isolated from service	TRUE	FALSE	FALSE	40 CFR 61 Subpart L	UNCLASSIFIED	21-Mar-18	21-Mar-18	Matt Case
COKE	R606	Valve	Externally Actuated	Light Liquid	Accessible	FALSE	8610	1" VALVE & LEVEL GAUGE WEST SCRUBBER BOTTOM	02	0.5	Yes, equipment can be isolated from service	TRUE	FALSE	FALSE	40 CFR 61 Subpart L	UNCLASSIFIED	21-Mar-18	21-Mar-18	Matt Case
COKE	R607	Valve	Externally Actuated	Light Liquid	Accessible	FALSE	8610	1" VALVE & LEVEL GAUGE WEST SCRUBBER BOTTOM	02	0.5	Yes, equipment can be isolated from service	TRUE	FALSE	FALSE	40 CFR 61 Subpart L	UNCLASSIFIED	21-Mar-18	21-Mar-18	Matt Case
COKE	R608	Valve	Externally Actuated	Light Liquid	Accessible	FALSE	805.001	4" VALVE #3 WASH OIL SCRUBBER SPIRAL COOLER OUTLET W/2FL & 3	011	4	Yes, equipment can be isolated from service	TRUE	FALSE	FALSE	40 CFR 61 Subpart L	UNCLASSIFIED	21-Mar-18	21-Mar-18	Matt Case
COKE	R609	Valve	Externally Actuated	Light Liquid	Accessible	FALSE	818.001	5FT S OF WEST SCRUBBER	05	4	Yes, equipment can be isolated from service	TRUE	FALSE	FALSE	40 CFR 61 Subpart L	UNCLASSIFIED	21-Mar-18	21-Mar-18	Matt Case
COKE	R61	Valve	Externally Actuated	Light Liquid	Accessible	FALSE	312	14" VALVE @ PROCESS WATER COOLING TOWER PUMPS W/15WC & 1SC	08	14	Yes, equipment can be isolated from service	TRUE	FALSE	FALSE	40 CFR 61 Subpart L	UNCLASSIFIED	24-Oct-16	23-Nov-16	ARAN PARKER
COKE	R610	Valve	Externally Actuated	Light Liquid	Accessible	FALSE	818.002	5FT S OF WEST SCRUBBER	05	0.5	Yes, equipment can be isolated from service	TRUE	FALSE	FALSE	40 CFR 61 Subpart L	UNCLASSIFIED	21-Mar-18	21-Mar-18	Matt Case

UNIT_CODE	TAG_ NUMBER	EQUITYPE_DESC	CONFIG_DESC	SERVICE_DESC	ACCESS_DESC	CLOSED_VENT _SYSTEM	ROUTE	LOCATION	LEVEL	SIZE	IFSTYPE_DESC	ATTEMPT_A LLOWED	UNDER_300_H OURS_SERVIC E	POTENTIAL_ OPEN_END	GROUP_DESC	PRODUCT_DESC	DATE_ADDED	DATE_IN_SERVICE	TECH_DESC
COKE	R611	Valve	Externally Actuated	Light Liquid	Accessible	FALSE	818.003	5FT S OF WEST SCRUBBER	05	2	Yes, equipment can be isolated from service	TRUE	FALSE	FALSE	40 CFR 61 Subpart L	UNCLASSIFIED	21-Mar-18	21-Mar-18	Matt Case
COKE	R612	Valve	Externally Actuated	Light Liquid	Accessible	FALSE	782.001	#5 WASH OIL SCRUBBER SPIRAL COOLER TOP OUTLET	04	1	Yes, equipment can be isolated from service	TRUE	FALSE	FALSE	40 CFR 61 Subpart L	UNCLASSIFIED	21-Mar-18	21-Mar-18	Matt Case
COKE	R613	Valve	Externally Actuated	Light Liquid	Accessible	FALSE	782.002	#5 WASH OIL SCRUBBER SPIRAL COOLER TOP OUTLET	011	6	Yes, equipment can be isolated from service	TRUE	FALSE	FALSE	40 CFR 61 Subpart L	UNCLASSIFIED	21-Mar-18	21-Mar-18	Matt Case
COKE	R614	Valve	Externally Actuated	Light Liquid	Accessible	FALSE	782.003	#5 WASH OIL SCRUBBER SPIRAL COOLER TOP OUTLET	011	6	Yes, equipment can be isolated from service	TRUE	FALSE	FALSE	40 CFR 61 Subpart L	UNCLASSIFIED	21-Mar-18	21-Mar-18	Matt Case
COKE	R615	Valve	Externally Actuated	Light Liquid	Accessible	FALSE	782.004	#5 WASH OIL SCRUBBER SPIRAL COOLER TOP OUTLET	02	0.8	Yes, equipment can be isolated from service	TRUE	FALSE	FALSE	40 CFR 61 Subpart L	UNCLASSIFIED	21-Mar-18	21-Mar-18	Matt Case
COKE	R616	Valve	Externally Actuated	Light Liquid	Accessible	FALSE	782.005	#5 WASH OIL SCRUBBER SPIRAL COOLER TOP OUTLET	07	0.8	Yes, equipment can be isolated from service	TRUE	FALSE	FALSE	40 CFR 61 Subpart L	UNCLASSIFIED	21-Mar-18	21-Mar-18	Matt Case
COKE	R617	Valve	Externally Actuated	Light Liquid	Accessible	FALSE	785.001	#5 WASH OIL SCRUBBER SPIRAL COOLER TOP INLET	06	0.8	Yes, equipment can be isolated from service	TRUE	FALSE	FALSE	40 CFR 61 Subpart L	UNCLASSIFIED	21-Mar-18	21-Mar-18	Matt Case
COKE	R618	Valve	Externally Actuated	Light Liquid	Accessible	FALSE	789.001	#5 WASH OIL SCRUBBER SPIRAL COOLER TOP INLET	06	0.8	Yes, equipment can be isolated from service	TRUE	FALSE	FALSE	40 CFR 61 Subpart L	UNCLASSIFIED	21-Mar-18	21-Mar-18	Matt Case
COKE	R619	Valve	Externally Actuated	Light Liquid	Accessible	FALSE	789.002	#5 WASH OIL SCRUBBER SPIRAL COOLER TOP INLET	06	0.8	Yes, equipment can be isolated from service	TRUE	FALSE	FALSE	40 CFR 61 Subpart L	UNCLASSIFIED	21-Mar-18	21-Mar-18	Matt Case
COKE	R62	Flange	Standard Service	Light Liquid	Accessible	FALSE	664	COG CONDENSATE WITH 4 VALVES @ PRIMARY WEST	05	4	Yes, equipment can be isolated from service	TRUE	FALSE	FALSE	40 CFR 61 Subpart L	UNCLASSIFIED	24-Oct-16	07-Dec-16	Brent Birdwell
COKE	R620	Valve	Externally Actuated	Light Liquid	Accessible	FALSE	781.001	#4 WASH OIL SCRUBBER SPIRAL COOLER OUTLET	02	0.8	Yes, equipment can be isolated from service	TRUE	FALSE	FALSE	40 CFR 61 Subpart L	UNCLASSIFIED	21-Mar-18	21-Mar-18	Matt Case
COKE	R621	Valve	Externally Actuated	Light Liquid	Accessible	FALSE	781.002	#4 WASH OIL SCRUBBER SPIRAL COOLER OUTLET	07	0.8	Yes, equipment can be isolated from service	TRUE	FALSE	FALSE	40 CFR 61 Subpart L	UNCLASSIFIED	21-Mar-18	21-Mar-18	Matt Case
COKE	R622	Valve	Externally Actuated	Light Liquid	Accessible	FALSE	789.003	#5 WASH OIL SCRUBBER SPIRAL COOLER TOP INLET	012	6	Yes, equipment can be isolated from service	TRUE	FALSE	FALSE	40 CFR 61 Subpart L	UNCLASSIFIED	21-Mar-18	21-Mar-18	Matt Case
COKE	R623	Valve	Externally Actuated	Light Liquid	Accessible	FALSE	789.004	#5 WASH OIL SCRUBBER SPIRAL COOLER TOP INLET	010	6	Yes, equipment can be isolated from service	TRUE	FALSE	FALSE	40 CFR 61 Subpart L	UNCLASSIFIED	21-Mar-18	21-Mar-18	Matt Case
COKE	R624	Valve	Externally Actuated	Light Liquid	Accessible	FALSE	789.005	#5 WASH OIL SCRUBBER SPIRAL COOLER TOP INLET	012	0.5	Yes, equipment can be isolated from service	TRUE	FALSE	FALSE	40 CFR 61 Subpart L	UNCLASSIFIED	21-Mar-18	21-Mar-18	Matt Case
COKE	R625	Valve	Externally Actuated	Light Liquid	Accessible	FALSE	791.001	#4 WASH OIL SCRUBBER SPIRAL COOLER INLET	012	0.8	Yes, equipment can be isolated from service	TRUE	FALSE	FALSE	40 CFR 61 Subpart L	UNCLASSIFIED	21-Mar-18	21-Mar-18	Matt Case
COKE	R626	Valve	Externally Actuated	Light Liquid	Accessible	FALSE	791.002	#4 WASH OIL SCRUBBER SPIRAL COOLER INLET	012	0.8	Yes, equipment can be isolated from service	TRUE	FALSE	FALSE	40 CFR 61 Subpart L	UNCLASSIFIED	21-Mar-18	21-Mar-18	Matt Case
COKE	R627	Valve	Externally Actuated	Light Liquid	Accessible	FALSE	791.003	#4 WASH OIL SCRUBBER SPIRAL COOLER INLET	012	0.8	Yes, equipment can be isolated from service	TRUE	FALSE	FALSE	40 CFR 61 Subpart L	UNCLASSIFIED	21-Mar-18	21-Mar-18	Matt Case
COKE	R628	Valve	Externally Actuated	Light Liquid	Accessible	FALSE	791.005	#4 WASH OIL SCRUBBER SPIRAL COOLER INLET	06	0.8	Yes, equipment can be isolated from service	TRUE	FALSE	FALSE	40 CFR 61 Subpart L	UNCLASSIFIED	21-Mar-18	21-Mar-18	Matt Case
COKE	R629	Valve	Externally Actuated	Light Liquid	Accessible	FALSE	791.004	#4 WASH OIL SCRUBBER SPIRAL COOLER INLET	012	0.8	Yes, equipment can be isolated from service	TRUE	FALSE	FALSE	40 CFR 61 Subpart L	UNCLASSIFIED	21-Mar-18	21-Mar-18	Matt Case
COKE	R63	Valve	Externally Actuated	Light Liquid	Accessible	FALSE	745	COG CONDENSATE @ PRIMARY WEST	04	4	Yes, equipment can be isolated from service	TRUE	FALSE	FALSE	40 CFR 61 Subpart L	UNCLASSIFIED	24-Oct-16	23-Nov-16	Matt Case
COKE	R630	Valve	Externally Actuated	Light Liquid	Accessible	FALSE	806.001	#3 WASH OIL SCRUBBER SPIRAL COOLER	03	0.8	Yes, equipment can be isolated from service	TRUE	FALSE	FALSE	40 CFR 61 Subpart L	UNCLASSIFIED	21-Mar-18	21-Mar-18	Matt Case
COKE	R631	Valve	Externally Actuated	Light Liquid	Accessible	FALSE	806.002	#3 WASH OIL SCRUBBER SPIRAL COOLER	03	0.8	Yes, equipment can be isolated from service	TRUE	FALSE	FALSE	40 CFR 61 Subpart L	UNCLASSIFIED	21-Mar-18	21-Mar-18	Matt Case
COKE	R632	Valve	Externally Actuated	Light Liquid	Accessible	FALSE	791.006	#3 WASH OIL SCRUBBER SPIRAL COOLER INLET	06	0.8	Yes, equipment can be isolated from service	TRUE	FALSE	FALSE	40 CFR 61 Subpart L	UNCLASSIFIED	21-Mar-18	21-Mar-18	Matt Case
COKE	R633	Valve	Externally Actuated	Light Liquid	Accessible	FALSE	793.001	#2 WASH OIL SCRUBBER SPIRAL COOLER INLET	012	0.8	Yes, equipment can be isolated from service	TRUE	FALSE	FALSE	40 CFR 61 Subpart L	UNCLASSIFIED	21-Mar-18	21-Mar-18	Matt Case
COKE	R634	Valve	Externally Actuated	Light Liquid	Accessible	FALSE	793.002	#2 WASH OIL SCRUBBER SPIRAL COOLER INLET	011	0.8	Yes, equipment can be isolated from service	TRUE	FALSE	FALSE	40 CFR 61 Subpart L	UNCLASSIFIED	21-Mar-18	21-Mar-18	Matt Case
COKE	R635	Valve	Externally Actuated	Light Liquid	Accessible	FALSE	793.003	#2 WASH OIL SCRUBBER SPIRAL COOLER INLET	06	1	Yes, equipment can be isolated from service	TRUE	FALSE	FALSE	40 CFR 61 Subpart L	UNCLASSIFIED	21-Mar-18	21-Mar-18	Matt Case
COKE	R636	Valve	Externally Actuated	Light Liquid	Accessible	FALSE	793.004	#2 WASH OIL SCRUBBER SPIRAL COOLER INLET	06	0.8	Yes, equipment can be isolated from service	TRUE	FALSE	FALSE	40 CFR 61 Subpart L	UNCLASSIFIED	21-Mar-18	21-Mar-18	Matt Case
COKE	R637	Valve	Externally Actuated	Light Liquid	Accessible	FALSE	793.005	#2 WASH OIL SCRUBBER SPIRAL COOLER INLET	06	0.8	Yes, equipment can be isolated from service	TRUE	FALSE	FALSE	40 CFR 61 Subpart L	UNCLASSIFIED	21-Mar-18	21-Mar-18	Matt Case
COKE	R638	Valve	Externally Actuated	Light Liquid	Accessible	FALSE	793.006	#2 WASH OIL SCRUBBER SPIRAL COOLER INLET	03	0.8	Yes, equipment can be isolated from service	TRUE	FALSE	FALSE	40 CFR 61 Subpart L	UNCLASSIFIED	21-Mar-18	21-Mar-18	Matt Case
COKE	R639	Valve	Externally Actuated	Light Liquid	Accessible	FALSE	793.007	#2 WASH OIL SCRUBBER SPIRAL COOLER INLET	03	0.8	Yes, equipment can be isolated from service	TRUE	FALSE	FALSE	40 CFR 61 Subpart L	UNCLASSIFIED	21-Mar-18	21-Mar-18	Matt Case
COKE	R64	Valve	Externally Actuated	Light Liquid	Accessible	FALSE	1064	1½" COG CONDENSATE DRIP POT VALVE @ PRIMARY WEST	010	1.5	Yes, equipment can be isolated from service	TRUE	FALSE	FALSE	40 CFR 61 Subpart L	UNCLASSIFIED	24-Oct-16	23-Nov-16	ARAN PARKER
COKE	R640	Valve	Externally Actuated	Light Liquid	Accessible	FALSE	801.001	#1 WASH OIL SCRUBBER SPIRAL COOLER INLET	012	0.8	Yes, equipment can be isolated from service	TRUE	FALSE	FALSE	40 CFR 61 Subpart L	UNCLASSIFIED	21-Mar-18	21-Mar-18	Matt Case
COKE	R641	Valve	Externally Actuated	Light Liquid	Accessible	FALSE	801.002	#1 WASH OIL SCRUBBER SPIRAL COOLER INLET	012	0.8	Yes, equipment can be isolated from service	TRUE	FALSE	FALSE	40 CFR 61 Subpart L	UNCLASSIFIED	21-Mar-18	21-Mar-18	Matt Case
COKE	R642	Valve	Externally Actuated	Light Liquid	Accessible	FALSE	801.003	#1 WASH OIL SCRUBBER SPIRAL COOLER INLET	06	0.8	Yes, equipment can be isolated from service	TRUE	FALSE	FALSE	40 CFR 61 Subpart L	UNCLASSIFIED	21-Mar-18	21-Mar-18	Matt Case
COKE	R643	Valve	Externally Actuated	Light Liquid	Accessible	FALSE	801.004	#1 WASH OIL SCRUBBER SPIRAL COOLER INLET	06	0.8	Yes, equipment can be isolated from service	TRUE	FALSE	FALSE	40 CFR 61 Subpart L	UNCLASSIFIED	21-Mar-18	21-Mar-18	Matt Case
COKE	R644	Valve	Externally Actuated	Light Liquid	Accessible	FALSE	801.005	#1 WASH OIL SCRUBBER SPIRAL COOLER INLET	06	0.8	Yes, equipment can be isolated from service	TRUE	FALSE	FALSE	40 CFR 61 Subpart L	UNCLASSIFIED	21-Mar-18	21-Mar-18	Matt Case
COKE	R645	Valve	Externally Actuated	Light Liquid	Accessible	FALSE	801.006	#1 WASH OIL SCRUBBER SPIRAL COOLER INLET	03	0.8	Yes, equipment can be isolated from service	TRUE	FALSE	FALSE	40 CFR 61 Subpart L	UNCLASSIFIED	21-Mar-18	21-Mar-18	Matt Case
COKE	R646	Valve	Externally Actuated	Light Liquid	Accessible	FALSE	801.007	#1 WASH OIL SCRUBBER SPIRAL COOLER INLET	03	0.8	Yes, equipment can be isolated from service	TRUE	FALSE	FALSE	40 CFR 61 Subpart L	UNCLASSIFIED	21-Mar-18	21-Mar-18	Matt Case
COKE	R647	Valve	Externally Actuated	Light Liquid	Accessible	FALSE	815.001	W.O. LINE @ SCRUBBERS TO L.O. STILL	04	0.8	Yes, equipment can be isolated from service	TRUE	FALSE	FALSE	40 CFR 61 Subpart L	UNCLASSIFIED	21-Mar-18	21-Mar-18	Matt Case
COKE	R648	Valve	Externally Actuated	Light Liquid	Accessible	FALSE	815.002	W.O. LINE @ SCRUBBERS TO L.O. STILL	04	0.8	Yes, equipment can be isolated from service	TRUE	FALSE	FALSE	40 CFR 61 Subpart L	UNCLASSIFIED	21-Mar-18	21-Mar-18	Matt Case
COKE	R649	Valve	Externally Actuated	Light Liquid	Accessible	FALSE	830.001	2FT S OF HOT WATER STORAGE TANK	02	0.8	Yes, equipment can be isolated from service	FALSE	FALSE	FALSE	40 CFR 61 Subpart L	UNCLASSIFIED	21-Mar-18	21-Mar-18	Matt Case
COKE	R650	Valve	Externally Actuated	Light Liquid	Accessible	FALSE	830.002	2FT S OF HOT WATER STORAGE TANK	02	1	Yes, equipment can be isolated from service	FALSE	FALSE	FALSE	40 CFR 61 Subpart L	UNCLASSIFIED	21-Mar-18	21-Mar-18	Matt Case
COKE	R651	Valve	Externally Actuated	Light Liquid	Accessible	FALSE	830.003	2FT S OF HOT WATER STORAGE TANK	02	0.5	Yes, equipment can be isolated from service	FALSE	FALSE	FALSE	40 CFR 61 Subpart L	UNCLASSIFIED	21-Mar-18	21-Mar-18	Matt Case
COKE	R652	Valve	Externally Actuated	Light Liquid	Accessible	FALSE	830.004	2FT S OF HOT WATER STORAGE TANK	02	1	Yes, equipment can be isolated from service	FALSE	FALSE	FALSE	40 CFR 61 Subpart L	UNCLASSIFIED	21-Mar-18	21-Mar-18	Matt Case
COKE	R653	Pump	Standard Service	Light Liquid	Accessible	FALSE	830.005	2FT S OF HOT WATER STORAGE TANK	02	0	Yes, equipment can be isolated from service	FALSE	FALSE	FALSE	40 CFR 61 Subpart L	UNCLASSIFIED	21-Mar-18	21-Mar-18	Matt Case
COKE	R654	Valve	Externally Actuated	Light Liquid	Accessible	FALSE	740.001	PORTABLE DITCH PUMP @ PURIFIER	01	1	Yes, equipment can be isolated from service	TRUE	FALSE	FALSE	40 CFR 61 Subpart L	UNCLASSIFIED	22-Mar-18	22-Mar-18	Matt Case
COKE	R655	Valve	Externally Actuated	Light Liquid	Accessible	FALSE	740.002	PORTABLE DITCH PUMP @ PURIFIER	02	1	Yes, equipment can be isolated from service	TRUE	FALSE	FALSE	40 CFR 61 Subpart L	UNCLASSIFIED	22-Mar-18	22-Mar-18	Matt Case
COKE	R656	Valve	Externally Actuated	Light Liquid	Accessible	FALSE	740.003	PORTABLE DITCH PUMP @ PURIFIER	01	1	Yes, equipment can be isolated from service	TRUE	FALSE	FALSE	40 CFR 61 Subpart L	UNCLASSIFIED	22-Mar-18	22-Mar-18	Matt Case
COKE	R657	Valve	Externally Actuated	Light Liquid	Accessible	FALSE	629.001	(2) 8" & AUTO VALVE WASH OIL LINE @ CONDENSERS W/5FL & 4WC	1P3	8	Yes, equipment can be isolated from service	TRUE	FALSE	FALSE	40 CFR 61 Subpart L	UNCLASSIFIED	22-Mar-18	22-Mar-18	Brent Birdwell
COKE	R658	Valve	Externally Actuated	Light Liquid	Accessible	FALSE	1478	6" VALVE WASH OIL LINE TO L.O STILL @ EAST SCRUBBER	09	6	Yes, equipment can be isolated from service	TRUE	FALSE	FALSE	40 CFR 61 Subpart L	UNCLASSIFIED	09-May-18	09-May-18	Matt Case
COKE	R659	Valve	Closed Vent Bypass	Light Liquid	Accessible	FALSE	828	6" VALVE 6" LINE BETWEEN WASH OIL SCRUBBERS 2ND LEV	1P3	6	Yes, equipment can be isolated from service	TRUE	FALSE	FALSE	40 CFR 61 Subpart L	UNCLASSIFIED	09-May-18	09-May-18	Matt Case
COKE	R66	Flange	Standard Service	Light Liquid	Accessible	FALSE	384	MANHOLE PROCESS WATER DECANTER BOTTOM	04	36	Yes, equipment can be isolated from service	TRUE	FALSE	FALSE	40 CFR 61 Subpart L	UNCLASSIFIED	24-Oct-16	23-Nov-16	ARAN PARKER
COKE	R660	Valve	Externally Actuated	Light Liquid	Accessible	FALSE	810.001	W.O. LINE TO L.O. STILL@SCRUBBERS ABV #2 SPIRAL COOLER	015	6	Yes, equipment can be isolated from service	TRUE	FALSE	FALSE	40 CFR 61 Subpart L	UNCLASSIFIED	09-May-18	09-May-18	Matt Case
COKE	R661	Valve	Externally Actuated	Light Liquid	Accessible	FALSE	810.002	W.O. LINE TO L.O. STILL@SCRUBBERS ABV #2 SPIRAL COOLER	015	2	Yes, equipment can be isolated from service	TRUE	FALSE	FALSE	40 CFR 61 Subpart L	UNCLASSIFIED	09-May-18	09-May-18	Matt Case
COKE	R662	Valve	Externally Actuated	Light Liquid	Accessible	FALSE	767.001	NE SDE OF WILPUTTE DECANTER	04	6	Yes, equipment can be isolated from service	TRUE	FALSE	FALSE	40 CFR 61 Subpart L	UNCLASSIFIED	09-May-18	09-May-18	Matt Case
COKE	R667	Valve	Externally Actuated	Light Liquid	Accessible	FALSE	739.002	1FT S OF DIRTY WATER TRANSFER BASIN PUMP	01	2	Yes, equipment can be isolated from service	TRUE	FALSE	FALSE	40 CFR 61 Subpart L	UNCLASSIFIED	09-May-18	09-May-18	Brent Birdwell
COKE	R668	Valve	Externally Actuated	Light Liquid	Accessible	FALSE	739.001	IFT S OF DIRTY WATER TRANSFER BASIN PUMP	01	2	Yes, equipment can be isolated from service	TRUE	FALSE	FALSE	40 CFR 61 Subpart L	UNCLASSIFIED	09-May-18	09-May-18	Matt Case
COKE	R669	Valve	Externally Actuated	Light Liquid	Accessible	FALSE	767.005	12FT NE SDE OF WILPUTTE DECANTER 5FT W OF L.O. STILL BTM	012	2	Yes, equipment can be isolated from service	TRUE	FALSE	FALSE	40 CFR 61 Subpart L	UNCLASSIFIED	09-May-18	09-May-18	Matt Case
COKE	R67	Valve	Externally Actuated	Light Liquid	Accessible	FALSE	385	1" VALVE @ PROCESS WATER DECANTER BOTTOM W/7SC	03	1	Yes, equipment can be isolated from service	TRUE	FALSE	FALSE	40 CFR 61 Subpart L	UNCLASSIFIED	24-Oct-16	23-Nov-16	ARAN PARKER
COKE	R670	Valve	Externally Actuated	Light Liquid	Accessible	FALSE	767.004	8FT NE SDE OF WILPUTTE DECANTER	012	10	Yes, equipment can be isolated from service	TRUE	FALSE	FALSE	40 CFR 61 Subpart L	UNCLASSIFIED	09-May-18	09-May-18	Matt Case
COKE	R671	Valve	Externally Actuated	Light Liquid	Accessible	FALSE	767.002	NE SDE OF WILPUTTE DECANTER	012	10	Yes, equipment can be isolated from service	TRUE	FALSE	FALSE	40 CFR 61 Subpart L	UNCLASSIFIED	09-May-18	09-May-18	Matt Case
COKE	R672	Valve	Externally Actuated	Light Liquid	Accessible	FALSE	767.003	NE SDE OF WILPUTTE DECANTER	012	10	Yes, equipment can be isolated from service	TRUE	FALSE	FALSE	40 CFR 61 Subpart L	UNCLASSIFIED	09-May-18	09-May-18	Matt Case
COKE	R674	Valve	Externally Actuated	Light Liquid	Accessible	FALSE	830	5FT SE OF EAST SCRUBBER ABV PMP	012	6	Yes, equipment can be isolated from service	TRUE	FALSE	FALSE	40 CFR 61 Subpart L	UNCLASSIFIED	09-May-18	09-May-18	Matt Case
COKE	R675	Valve	Externally Actuated	Light Liquid	Accessible	FALSE	829	6" VALVE 6" LINE BETWEEN WASH OIL SCRUBBERS 2ND LEV	1P3	6	Yes, equipment can be isolated from service	TRUE	FALSE	FALSE	40 CFR 61 Subpart L	UNCLASSIFIED	09-May-18	09-May-18	Matt Case
COKE	R68	Valve	Externally Actuated	Light Liquid	Accessible	FALSE	386	¾" VALVE PROCESS WATER DECANTER W/1FL, 3WC & 13SC	03	0.8	Yes, equipment can be isolated from service	TRUE	FALSE	FALSE	40 CFR 61 Subpart L	UNCLASSIFIED	24-Oct-16	23-Nov-16	ARAN PARKER
COKE	R69	Valve	Externally Actuated	Light Liquid	Accessible	FALSE	387	2" & (3) ¾" VALVES PROCESS WATER DECANTER W/3FL, 4WC & 22SC	05	2	Yes, equipment can be isolated from service	TRUE	FALSE	FALSE	40 CFR 61 Subpart L	UNCLASSIFIED	24-Oct-16	23-Nov-16	ARAN PARKER
COKE	R69A	Valve	Externally Actuated	Light Liquid	Accessible	FALSE	388	¾" VALVES PROCESS WATER DECANTER W/3FL, 4WC & 22SC	05	0.8	Yes, equipment can be isolated from service	TRUE	FALSE	FALSE	40 CFR 61 Subpart L	UNCLASSIFIED	24-Oct-16	23-Nov-16	ARAN PARKER
COKE	R69B	Valve	Externally Actuated	Light Liquid	Accessible	FALSE	389	¾" VALVES PROCESS WATER DECANTER W/3FL, 4WC & 22SC	05	0.8	Yes, equipment can be isolated from service	TRUE	FALSE	FALSE	40 CFR 61 Subpart L	UNCLASSIFIED	24-Oct-16	23-Nov-16	ARAN PARKER
COKE	R69C	Valve	Externally Actuated	Light Liquid	Accessible	FALSE	390	¾" VALVES PROCESS WATER DECANTER W/3FL, 4WC & 22SC	05	0.8	Yes, equipment can be isolated from service	TRUE	FALSE	FALSE	40 CFR 61 Subpart L	UNCLASSIFIED	24-Oct-16	23-Nov-16	ARAN PARKER
COKE	R7	Valve	Externally Actuated	Light Liquid	Accessible	FALSE	753	(2) 1"VALVES BOTTOM OF PURIFIER W/14WC	02	1	Yes, equipment can be isolated from service	TRUE	FALSE	FALSE	40 CFR 61 Subpart L	UNCLASSIFIED	24-Oct-16	23-Nov-16	ARAN PARKER
COKE	R70	Valve	Externally Actuated	Light Liquid	Accessible	FALSE	391	4" VALVE PROCESS WATER DECANTER W/2FL & 10WC	04	4	Yes, equipment can be isolated from service	TRUE	FALSE	FALSE	40 CFR 61 Subpart L	UNCLASSIFIED	24-Oct-16	23-Nov-16	ARAN PARKER
COKE	R71	Valve	Externally Actuated	Light Liquid	Accessible	FALSE	392	¾" VALVE PROCESS WATER DECANTER W/1FL, 4WC & 6SC	07	0.8	Yes, equipment can be isolated from service	TRUE	FALSE	FALSE	40 CFR 61 Subpart L	UNCLASSIFIED	24-Oct-16	23-Nov-16	ARAN PARKER
COKE	R72	Valve	Externally Actuated	Light Liquid	Accessible	FALSE	393	(2) 4" VALVES PROCESS WATER DECANTER W/5FL & 14WC	06	4	Yes, equipment can be isolated from service	TRUE	FALSE	FALSE	40 CFR 61 Subpart L	UNCLASSIFIED	24-Oct-16	23-Nov-16	ARAN PARKER
COKE	R72A	Valve	Externally Actuated	Light Liquid	Accessible	FALSE	394	4" VALVES PROCESS WATER DECANTER W/5FL & 14WC	07	4	Yes, equipment can be isolated from service	TRUE	FALSE	FALSE	40 CFR 61 Subpart L	UNCLASSIFIED	24-Oct-16	23-Nov-16	ARAN PARKER
COKE	R73	Valve	Externally Actuated	Light Liquid	Accessible	FALSE	395	¾" VALVE PROCESS WATER DECANTER W/1FL, 4WC & 16SC	03	0.8	Yes, equipment can be isolated from service	TRUE	FALSE	FALSE	40 CFR 61 Subpart L	UNCLASSIFIED	24-Oct-16	23-Nov-16	ARAN PARKER
COKE	R74	Valve	Externally Actuated	Light Liquid	Accessible	FALSE	396	2" VALVE PROCESS WATER DECANTER W/1FL & 11WC	02	2	Yes, equipment can be isolated from service	TRUE	FALSE	FALSE	40 CFR 61 Subpart L	UNCLASSIFIED	24-Oct-16	23-Nov-16	ARAN PARKER
COKE	R75	Valve	Externally Actuated	Light Liquid	Accessible	FALSE	398	(2) 2" VALVES PROCESS WATER DECANTER W/4FL, 16WC & 4SC	07	2	Yes, equipment can be isolated from service	TRUE	FALSE	FALSE	40 CFR 61 Subpart L	UNCLASSIFIED	24-Oct-16	23-Nov-16	ARAN PARKER

UNIT_CODE	TAG_ NUMBER	EQUITYPE_DESC	CONFIG_DESC	SERVICE_DESC	ACCESS_DESC	CLOSED_VENT _SYSTEM	ROUTE	LOCATION	LEVEL	SIZE	IFSTYPE_DESC	ATTEMPT_A LLOWED	UNDER_300_H OURS_SERVIC E	POTENTIAL_ OPEN_END	GROUP_DESC	PRODUCT_DESC	DATE_ADDED	DATE_IN_SERVICE	TECH_DESC
COKE	R75A	Valve	Externally Actuated	Light Liquid	Accessible	FALSE	399	2" VALVES PROCESS WATER DECANTER W/4FL, 16WC & 4SC	07	2	Yes, equipment can be isolated from service	TRUE	FALSE	FALSE	40 CFR 61 Subpart L	UNCLASSIFIED	24-Oct-16	23-Nov-16	ARAN PARKER
COKE	R76	Valve	Externally Actuated	Light Liquid	Accessible	FALSE	400	¾" VALVE PROCESS WATER DECANTER W/1FL, 4WC & 14SC	03	0.8	Yes, equipment can be isolated from service	TRUE	FALSE	FALSE	40 CFR 61 Subpart L	UNCLASSIFIED	24-Oct-16	23-Nov-16	ARAN PARKER
COKE	R77	Valve	Externally Actuated	Light Liquid	Accessible	FALSE	401	4" VALVE PROCESS WATER DECANTER W/3FL & 8WC	05	4	Yes, equipment can be isolated from service	TRUE	FALSE	FALSE	40 CFR 61 Subpart L	UNCLASSIFIED	24-Oct-16	23-Nov-16	ARAN PARKER
COKE	R78	Valve	Externally Actuated	Light Liquid	Accessible	FALSE	404	¾" VALVE PROCESS WATER DECANTER W/1FL, 4WC & 13SC	03	0.8	Yes, equipment can be isolated from service	TRUE	FALSE	FALSE	40 CFR 61 Subpart L	UNCLASSIFIED	24-Oct-16	23-Nov-16	ARAN PARKER
COKE	R79	Flange	Standard Service	Light Liquid	Accessible	FALSE	405	MANHOLE PROCESS WATER DECANTER	03	36	Yes, equipment can be isolated from service	TRUE	FALSE	FALSE	40 CFR 61 Subpart L	UNCLASSIFIED	24-Oct-16	23-Nov-16	ARAN PARKER
COKE	R7A	Valve	Externally Actuated	Light Liquid	Accessible	FALSE	754	1"VALVES BOTTOM OF PURIFIER W/14WC	00	1	Yes, equipment can be isolated from service	TRUE	FALSE	FALSE	40 CFR 61 Subpart L	UNCLASSIFIED	24-Oct-16	23-Nov-16	ARAN PARKER
COKE	R8	Valve	Externally Actuated	Light Liquid	Accessible	FALSE	750	4"VALVE BOTTOM OF PURIFIER W/4FL, 7SC & 6WC	03	4	Yes, equipment can be isolated from service	TRUE	FALSE	FALSE	40 CFR 61 Subpart L	UNCLASSIFIED	24-Oct-16	23-Nov-16	ARAN PARKER
COKE	R80	Flange	Standard Service	Light Liquid	Accessible	FALSE	406	MANHOLE PROCESS WATER DECANTER W/1FL & 2WC	05	36	Yes, equipment can be isolated from service	TRUE	FALSE	FALSE	40 CFR 61 Subpart L	UNCLASSIFIED	24-Oct-16	23-Nov-16	ARAN PARKER
COKE	R81	Flange	Standard Service	Light Liquid	Accessible	FALSE	402	MANHOLE PROCESS WATER DECANTER (EAST SIDE OF DECANTER)	08	36	Yes, equipment can be isolated from service	TRUE	FALSE	FALSE	40 CFR 61 Subpart L	UNCLASSIFIED	24-Oct-16	23-Nov-16	ARAN PARKER
COKE	R82	Flange	Standard Service	Light Liquid	Accessible	FALSE	333	MANHOLE PROCESS WATER DECANTER	08	36	Yes, equipment can be isolated from service	TRUE	FALSE	FALSE	40 CFR 61 Subpart L	UNCLASSIFIED	24-Oct-16	23-Nov-16	ARAN PARKER
COKE	R83	Pump	Standard Service	Light Liquid	Accessible	FALSE	348	NORTH WASH OIL PUMPING TANK PUMP	02	0	Yes, equipment can be isolated from service	TRUE	FALSE	FALSE	40 CFR 61 Subpart L	UNCLASSIFIED	24-Oct-16	23-Nov-16	ARAN PARKER
COKE	R84	Valve	Externally Actuated	Light Liquid	Accessible	FALSE	346	6" VALVE NORTH WASH OIL PUMPING TANK PUMP OUTLET W/5FL & 3W	05	6	Yes, equipment can be isolated from service	TRUE	FALSE	FALSE	40 CFR 61 Subpart L	UNCLASSIFIED	24-Oct-16	23-Nov-16	ARAN PARKER
COKE	R85	Valve	Externally Actuated	Light Liquid	Accessible	FALSE	345	6" VALVE NORTH WASH OIL PUMPING TANK PUMP INLET W/3FL	02	6	Yes, equipment can be isolated from service	TRUE	FALSE	FALSE	40 CFR 61 Subpart L	UNCLASSIFIED	24-Oct-16	23-Nov-16	ARAN PARKER
COKE	R86	Valve	Externally Actuated	Light Liquid	Accessible	FALSE	347	6" VALVE SOUTH WASH OIL PUMPING TANK PUMP INLET W/3FL	04	6	Yes, equipment can be isolated from service	TRUE	FALSE	FALSE	40 CFR 61 Subpart L	UNCLASSIFIED	24-Oct-16	23-Nov-16	ARAN PARKER
COKE	R87	Valve	Externally Actuated	Light Liquid	Accessible	FALSE	349	6" VALVE SOUTH WASH OIL PUMPING TANK PUMP OUTLET W/5FL & 1WC	04	6	Yes, equipment can be isolated from service	TRUE	FALSE	FALSE	40 CFR 61 Subpart L	UNCLASSIFIED	24-Oct-16	23-Nov-16	ARAN PARKER
COKE	R88	Pump	Standard Service	Light Liquid	Accessible	FALSE	350	SOUTH WASH OIL PUMPING TANK PUMP	01	0	Yes, equipment can be isolated from service	TRUE	FALSE	FALSE	40 CFR 61 Subpart L	UNCLASSIFIED	24-Oct-16	23-Nov-16	ARAN PARKER
COKE	R89	Valve	Externally Actuated	Light Liquid	Accessible	FALSE	343	2" & ½" VALVE WASH OIL PUMPING TANK BOTTOM W/6SC	01	2	Yes, equipment can be isolated from service	TRUE	FALSE	FALSE	40 CFR 61 Subpart L	UNCLASSIFIED	24-Oct-16	23-Nov-16	ARAN PARKER
COKE	R89A	Valve	Externally Actuated	Light Liquid	Accessible	FALSE	344	2 ½" VALVE WASH OIL PUMPING TANK BOTTOM W/6SC	01	0.5	Yes, equipment can be isolated from service	TRUE	FALSE	FALSE	40 CFR 61 Subpart L	UNCLASSIFIED	24-Oct-16	23-Nov-16	ARAN PARKER
COKE	R9	Valve	Externally Actuated	Light Liquid	Accessible	FALSE	748	2"VALVE LINE FROM PURIFIER W/2FL, 2WC & 8SC	03	2	Yes, equipment can be isolated from service	TRUE	FALSE	FALSE	40 CFR 61 Subpart L	UNCLASSIFIED	24-Oct-16	23-Nov-16	Matt Case
COKE	R90	Flange	Standard Service	Light Liquid	Accessible	FALSE	337	MANHOLE WASH OIL PUMPING TANK W/1FL & 2WC	010	36	Yes, equipment can be isolated from service	TRUE	FALSE	FALSE	40 CFR 61 Subpart L	UNCLASSIFIED	24-Oct-16	23-Nov-16	ARAN PARKER
COKE	R91	Valve	Externally Actuated	Light Liquid	Accessible	FALSE	338	6" VALVE WASH OIL PUMPING TANK W/2FL, 4WC & 1SC	08	6	Yes, equipment can be isolated from service	TRUE	FALSE	FALSE	40 CFR 61 Subpart L	UNCLASSIFIED	24-Oct-16	23-Nov-16	ARAN PARKER
COKE	R92	Valve	Externally Actuated	Light Liquid	Accessible	FALSE	340	(3) 1" VALVES WASH OIL PUMPING TANK W/3WC & 9SC	05	1	Yes, equipment can be isolated from service	TRUE	FALSE	FALSE	40 CFR 61 Subpart L	UNCLASSIFIED	24-Oct-16	23-Nov-16	ARAN PARKER
COKE	R92A	Valve	Externally Actuated	Light Liquid	Accessible	FALSE	341	1" VALVES WASH OIL PUMPING TANK W/3WC & 9SC	05	1	Yes, equipment can be isolated from service	TRUE	FALSE	FALSE	40 CFR 61 Subpart L	UNCLASSIFIED	24-Oct-16	23-Nov-16	ARAN PARKER
COKE	R92B	Valve	Externally Actuated	Light Liquid	Accessible	FALSE	342	1" VALVES WASH OIL PUMPING TANK W/3WC & 9SC	05	1	Yes, equipment can be isolated from service	TRUE	FALSE	FALSE	40 CFR 61 Subpart L	UNCLASSIFIED	24-Oct-16	23-Nov-16	ARAN PARKER
COKE	R93	Flange	Standard Service	Light Liquid	Accessible	FALSE	351	MANHOLE WASH OIL PUMPING TANK W/1FL & 2WC	08	36	Yes, equipment can be isolated from service	TRUE	FALSE	FALSE	40 CFR 61 Subpart L	UNCLASSIFIED	24-Oct-16	23-Nov-16	ARAN PARKER
COKE	R94	Valve	Externally Actuated	Light Liquid	Accessible	FALSE	352	(2) 3/8" VALVES & PRESSURE GAUGE WASH OIL PUMPING TANK W/13S	07	0.8	Yes, equipment can be isolated from service	TRUE	FALSE	FALSE	40 CFR 61 Subpart L	UNCLASSIFIED	24-Oct-16	23-Nov-16	ARAN PARKER
COKE	R94A	Valve	Externally Actuated	Light Liquid	Accessible	FALSE	353	3/8" VALVES & PRESSURE GAUGE WASH OIL PUMPING TANK W/13S	07	0.8	Yes, equipment can be isolated from service	TRUE	FALSE	FALSE	40 CFR 61 Subpart L	UNCLASSIFIED	24-Oct-16	23-Nov-16	ARAN PARKER
COKE	R95	Valve	Externally Actuated	Light Liquid	Accessible	FALSE	360	4" & ½" VALVES WASH OIL PUMPING TANK W/3FL, 6WC & 12SC	03	4	Yes, equipment can be isolated from service	TRUE	FALSE	FALSE	40 CFR 61 Subpart L	UNCLASSIFIED	24-Oct-16	23-Nov-16	ARAN PARKER
COKE	R95A	Valve	Externally Actuated	Light Liquid	Accessible	FALSE	361	½" VALVES WASH OIL PUMPING TANK W/3FL, 6WC & 12SC	03	0.5	Yes, equipment can be isolated from service	TRUE	FALSE	FALSE	40 CFR 61 Subpart L	UNCLASSIFIED	24-Oct-16	23-Nov-16	ARAN PARKER
COKE	R96	Flange	Standard Service	Light Liquid	Accessible	FALSE	366	WASH OIL DECANTER BOTTOM W/3WC	03	2	Yes, equipment can be isolated from service	TRUE	FALSE	FALSE	40 CFR 61 Subpart L	UNCLASSIFIED	24-Oct-16	23-Nov-16	ARAN PARKER
COKE	R97	Valve	Externally Actuated	Light Liquid	Accessible	FALSE	364	2" & ¾" VALVES WASH OIL DECANTER W/1WC & 14SC	01	2	Yes, equipment can be isolated from service	TRUE	FALSE	FALSE	40 CFR 61 Subpart L	UNCLASSIFIED	24-Oct-16	23-Nov-16	ARAN PARKER
COKE	R97A	Valve	Externally Actuated	Light Liquid	Accessible	FALSE	365	¾" VALVES WASH OIL DECANTER W/1WC & 14SC	01	0.8	Yes, equipment can be isolated from service	TRUE	FALSE	FALSE	40 CFR 61 Subpart L	UNCLASSIFIED	24-Oct-16	23-Nov-16	ARAN PARKER
COKE	R98	Valve	Externally Actuated	Light Liquid	Accessible	FALSE	362	2" VALVE WASH OIL DECANTER BOTTOM	03	2	Yes, equipment can be isolated from service	TRUE	FALSE	FALSE	40 CFR 61 Subpart L	UNCLASSIFIED	24-Oct-16	23-Nov-16	ARAN PARKER
COKE	R99	Valve	Externally Actuated	Light Liquid	Accessible	FALSE	363	2" VALVE WASH OIL DECANTER BOTTOM	03	2	Yes, equipment can be isolated from service	TRUE	FALSE	FALSE	40 CFR 61 Subpart L	UNCLASSIFIED	24-Oct-16	23-Nov-16	ARAN PARKER

UNIT_CODE	TAG_ NUMBER	ROUTE	LOCATION	LEVEL	ACCESS_DESC	GROUP_DESC	EQUITYPE DESC	SIZE	CONFIG_DESC	PRODUCT_DESC	CLOSED_ VENT_SYSTEM	SERVICE_DESC	UNDER_300_ HOURS_SERVICE	DATE_ADDED	DATE_INSPECTED	DATE_IN_SERVICE	INSPTYPE _CODE	TECH_DESC	INSTRUM_DESC	LEAKLIM_DESC
COKE	BLK188	299	TRANSFER BASIN PUMP W/1FL, 3WC & 1SC	03	Accessible	40 CFR 61 Subpart V	Pump	0	Standard Service	BENZENE	FALSE	Light Liquid	FALSE	31-Oct-16	03-Jan-18	29-Nov-16	VIS	PPM Consulting Technician	UNCLASSIFIED	Leak Limit of 10,000
COKE	BLK188	299	TRANSFER BASIN PUMP W/1FL, 3WC & 1SC	03	Accessible	40 CFR 61 Subpart V	Pump	0	Standard Service	BENZENE	FALSE	Light Liquid	FALSE	31-Oct-16	09-Jan-18	29-Nov-16	VIS	PPM Consulting Technician	UNCLASSIFIED	Leak Limit of 10,000
COKE	BLK188	299	TRANSFER BASIN PUMP W/1FL, 3WC & 1SC	03	Accessible	40 CFR 61 Subpart V	Pump	0	Standard Service	BENZENE	FALSE	Light Liquid	FALSE	31-Oct-16	15-Jan-18	29-Nov-16	VIS	PPM Consulting Technician	UNCLASSIFIED	Leak Limit of 10,000
COKE	BLK188	299	TRANSFER BASIN PUMP W/1FL, 3WC & 1SC	03	Accessible	40 CFR 61 Subpart V	Pump	0	Standard Service	BENZENE	FALSE	Light Liquid	FALSE	31-Oct-16	29-Jan-18	29-Nov-16	VIS	PPM Consulting Technician	UNCLASSIFIED	Leak Limit of 10,000
COKE	BLK188	299	TRANSFER BASIN PUMP W/1FL, 3WC & 1SC	03	Accessible	40 CFR 61 Subpart V	Pump	0	Standard Service	BENZENE	FALSE	Light Liquid	FALSE	31-Oct-16	06-Feb-18	29-Nov-16	VIS	PPM Consulting Technician	UNCLASSIFIED	Leak Limit of 10,000
COKE	BLK188	299	TRANSFER BASIN PUMP W/1FL, 3WC & 1SC	03	Accessible	40 CFR 61 Subpart V	Pump	0	Standard Service	BENZENE	FALSE	Light Liquid	FALSE	31-Oct-16	21-Feb-18	29-Nov-16	VIS	PPM Consulting Technician	UNCLASSIFIED	Leak Limit of 10,000
COKE	BLK188	299	TRANSFER BASIN PUMP W/1FL, 3WC & 1SC	03	Accessible	40 CFR 61 Subpart V	Pump	0	Standard Service	BENZENE	FALSE	Light Liquid	FALSE	31-Oct-16	26-Feb-18	29-Nov-16	VIS	PPM Consulting Technician	UNCLASSIFIED	Leak Limit of 10,000
COKE	BLK188	299	TRANSFER BASIN PUMP W/1FL, 3WC & 1SC	03	Accessible	40 CFR 61 Subpart V	Pump	0	Standard Service	BENZENE	FALSE	Light Liquid	FALSE	31-Oct-16	05-Mar-18	29-Nov-16	VIS	PPM Consulting Technician	UNCLASSIFIED	Leak Limit of 10,000
COKE	BLK188	299	TRANSFER BASIN PUMP W/1FL, 3WC & 1SC	03	Accessible	40 CFR 61 Subpart V	Pump	0	Standard Service	BENZENE	FALSE	Light Liquid	FALSE	31-Oct-16	19-Mar-18	29-Nov-16	VIS	PPM Consulting Technician	UNCLASSIFIED	Leak Limit of 10,000
COKE	BLK188	299	TRANSFER BASIN PUMP W/1FL, 3WC & 1SC	03	Accessible	40 CFR 61 Subpart V	Pump	0	Standard Service	BENZENE	FALSE	Light Liquid	FALSE	31-Oct-16	28-Mar-18	29-Nov-16	VIS	PPM Consulting Technician	UNCLASSIFIED	Leak Limit of 10,000
COKE	BLK188	299	TRANSFER BASIN PUMP W/1FL, 3WC & 1SC	03	Accessible	40 CFR 61 Subpart V	Pump	0	Standard Service	BENZENE	FALSE	Light Liquid	FALSE	31-Oct-16	04-Apr-18	29-Nov-16	VIS	PPM Consulting Technician	UNCLASSIFIED	Leak Limit of 10,000
COKE	BLK188	299	TRANSFER BASIN PUMP W/1FL, 3WC & 1SC	03	Accessible	40 CFR 61 Subpart V	Pump	0	Standard Service	BENZENE	FALSE	Light Liquid	FALSE	31-Oct-16	09-Apr-18	29-Nov-16	VIS	PPM Consulting Technician	UNCLASSIFIED	Leak Limit of 10,000
COKE	BLK188	299	TRANSFER BASIN PUMP W/1FL, 3WC & 1SC	03	Accessible	40 CFR 61 Subpart V	Pump	0	Standard Service	BENZENE	FALSE	Light Liquid	FALSE	31-Oct-16	17-Apr-18	29-Nov-16	VIS	PPM Consulting Technician	UNCLASSIFIED	Leak Limit of 10,000
COKE	BLK188	299	TRANSFER BASIN PUMP W/1FL, 3WC & 1SC	03	Accessible	40 CFR 61 Subpart V	Pump	0	Standard Service	BENZENE	FALSE	Light Liquid	FALSE	31-Oct-16	02-May-18	29-Nov-16	VIS	PPM Consulting Technician	UNCLASSIFIED	Leak Limit of 10,000
COKE	BLK188	299	TRANSFER BASIN PUMP W/1FL, 3WC & 1SC	03	Accessible	40 CFR 61 Subpart V	Pump	0	Standard Service	BENZENE	FALSE	Light Liquid	FALSE	31-Oct-16	16-May-18	29-Nov-16	VIS	PPM Consulting Technician	UNCLASSIFIED	Leak Limit of 10,000
COKE	BLK188	299	TRANSFER BASIN PUMP W/1FL, 3WC & 1SC	03	Accessible	40 CFR 61 Subpart V	Pump	0	Standard Service	BENZENE	FALSE	Light Liquid	FALSE	31-Oct-16	21-May-18	29-Nov-16	VIS	PPM Consulting Technician	UNCLASSIFIED	Leak Limit of 10,000
COKE	BLK188	299	TRANSFER BASIN PUMP W/1FL, 3WC & 1SC	03	Accessible	40 CFR 61 Subpart V	Pump	0	Standard Service	BENZENE	FALSE	Light Liquid	FALSE	31-Oct-16	30-May-18	29-Nov-16	VIS	PPM Consulting Technician	UNCLASSIFIED	Leak Limit of 10,000
COKE	BLK188	299	TRANSFER BASIN PUMP W/1FL, 3WC & 1SC	03	Accessible	40 CFR 61 Subpart V	Pump	0	Standard Service	BENZENE	FALSE	Light Liquid	FALSE	31-Oct-16	03-Jan-18	29-Nov-16	VIS	PPM Consulting Technician	UNCLASSIFIED	Leak Limit of 10,000
COKE	BLK193	300	SPARE TRANSFER PUMP	00	Accessible	40 CFR 61 Subpart V	Pump	0	Standard Service	BENZENE	FALSE	Light Liquid	FALSE	31-Oct-16	09-Jan-18	29-Nov-16	VIS	PPM Consulting Technician	UNCLASSIFIED	Leak Limit of 10,000
COKE	BLK193	300	SPARE TRANSFER PUMP	00	Accessible	40 CFR 61 Subpart V	Pump	0	Standard Service	BENZENE	FALSE	Light Liquid	FALSE	31-Oct-16	15-Jan-18	29-Nov-16	VIS	PPM Consulting Technician	UNCLASSIFIED	Leak Limit of 10,000
COKE	BLK193	300	SPARE TRANSFER PUMP	00	Accessible	40 CFR 61 Subpart V	Pump	0	Standard Service	BENZENE	FALSE	Light Liquid	FALSE	31-Oct-16	29-Jan-18	29-Nov-16	VIS	PPM Consulting Technician	UNCLASSIFIED	Leak Limit of 10,000
COKE	BLK193	300	SPARE TRANSFER PUMP	00	Accessible	40 CFR 61 Subpart V	Pump	0	Standard Service	BENZENE	FALSE	Light Liquid	FALSE	31-Oct-16	06-Feb-18	29-Nov-16	VIS	PPM Consulting Technician	UNCLASSIFIED	Leak Limit of 10,000
COKE	BLK193	300	SPARE TRANSFER PUMP	00	Accessible	40 CFR 61 Subpart V	Pump	0	Standard Service	BENZENE	FALSE	Light Liquid	FALSE	31-Oct-16	21-Feb-18	29-Nov-16	VIS	PPM Consulting Technician	UNCLASSIFIED	Leak Limit of 10,000
COKE	BLK193	300	SPARE TRANSFER PUMP	00	Accessible	40 CFR 61 Subpart V	Pump	0	Standard Service	BENZENE	FALSE	Light Liquid	FALSE	31-Oct-16	26-Feb-18	29-Nov-16	VIS	PPM Consulting Technician	UNCLASSIFIED	Leak Limit of 10,000
COKE	BLK193	300	SPARE TRANSFER PUMP	00	Accessible	40 CFR 61 Subpart V	Pump	0	Standard Service	BENZENE	FALSE	Light Liquid	FALSE	31-Oct-16	05-Mar-18	29-Nov-16	VIS	PPM Consulting Technician	UNCLASSIFIED	Leak Limit of 10,000
COKE	BLK193	300	SPARE TRANSFER PUMP	00	Accessible	40 CFR 61 Subpart V	Pump	0	Standard Service	BENZENE	FALSE	Light Liquid	FALSE	31-Oct-16	19-Mar-18	29-Nov-16	VIS	PPM Consulting Technician	UNCLASSIFIED	Leak Limit of 10,000
COKE	BLK193	300	SPARE TRANSFER PUMP	00	Accessible	40 CFR 61 Subpart V	Pump	0	Standard Service	BENZENE	FALSE	Light Liquid	FALSE	31-Oct-16	28-Mar-18	29-Nov-16	VIS	PPM Consulting Technician	UNCLASSIFIED	Leak Limit of 10,000
COKE	BLK193	300	SPARE TRANSFER PUMP	00	Accessible	40 CFR 61 Subpart V	Pump	0	Standard Service	BENZENE	FALSE	Light Liquid	FALSE	31-Oct-16	04-Apr-18	29-Nov-16	VIS	PPM Consulting Technician	UNCLASSIFIED	Leak Limit of 10,000
COKE	BLK193	300	SPARE TRANSFER PUMP	00	Accessible	40 CFR 61 Subpart V	Pump	0	Standard Service	BENZENE	FALSE	Light Liquid	FALSE	31-Oct-16	09-Apr-18	29-Nov-16	VIS	PPM Consulting Technician	UNCLASSIFIED	Leak Limit of 10,000
COKE	BLK193	300	SPARE TRANSFER PUMP	00	Accessible	40 CFR 61 Subpart V	Pump	0	Standard Service	BENZENE	FALSE	Light Liquid	FALSE	31-Oct-16	17-Apr-18	29-Nov-16	VIS	PPM Consulting Technician	UNCLASSIFIED	Leak Limit of 10,000
COKE	BLK193	300	SPARE TRANSFER PUMP	00	Accessible	40 CFR 61 Subpart V	Pump	0	Standard Service	BENZENE	FALSE	Light Liquid	FALSE	31-Oct-16	02-May-18	29-Nov-16	VIS	PPM Consulting Technician	UNCLASSIFIED	Leak Limit of 10,000
COKE	BLK193	300	SPARE TRANSFER PUMP	00	Accessible	40 CFR 61 Subpart V	Pump	0	Standard Service	BENZENE	FALSE	Light Liquid	FALSE	31-Oct-16	16-May-18	29-Nov-16	VIS	PPM Consulting Technician	UNCLASSIFIED	Leak Limit of 10,000
COKE	BLK193	300	SPARE TRANSFER PUMP	00	Accessible	40 CFR 61 Subpart V	Pump	0	Standard Service	BENZENE	FALSE	Light Liquid	FALSE	31-Oct-16	21-May-18	29-Nov-16	VIS	PPM Consulting Technician	UNCLASSIFIED	Leak Limit of 10,000
COKE	BLK193	300	SPARE TRANSFER PUMP	00	Accessible	40 CFR 61 Subpart V	Pump	0	Standard Service	BENZENE	FALSE	Light Liquid	FALSE	31-Oct-16	30-May-18	29-Nov-16	VIS	PPM Consulting Technician	UNCLASSIFIED	Leak Limit of 10,000
COKE	BLK193	300	SPARE TRANSFER PUMP	00	Accessible	40 CFR 61 Subpart V	Pump	0	Standard Service	BENZENE	FALSE	Light Liquid	FALSE	31-Oct-16	03-Jan-18	29-Nov-16	VIS	PPM Consulting Technician	UNCLASSIFIED	Leak Limit of 10,000
COKE	BLK230	602	NORTH REFLUX PUMP	02	Accessible	40 CFR 61 Subpart V	Pump	0	Standard Service	BENZENE	FALSE	Light Liquid	FALSE	31-Oct-16	09-Jan-18	29-Nov-16	VIS	PPM Consulting Technician	UNCLASSIFIED	Leak Limit of 10,000
COKE	BLK230	602	NORTH REFLUX PUMP	02	Accessible	40 CFR 61 Subpart V	Pump	0	Standard Service	BENZENE	FALSE	Light Liquid	FALSE	31-Oct-16	15-Jan-18	29-Nov-16	VIS	PPM Consulting Technician	UNCLASSIFIED	Leak Limit of 10,000
COKE	BLK230	602	NORTH REFLUX PUMP	02	Accessible	40 CFR 61 Subpart V	Pump	0	Standard Service	BENZENE	FALSE	Light Liquid	FALSE	31-Oct-16	29-Jan-18	29-Nov-16	VIS	PPM Consulting Technician	UNCLASSIFIED	Leak Limit of 10,000
COKE	BLK230	602	NORTH REFLUX PUMP	02	Accessible	40 CFR 61 Subpart V	Pump	0	Standard Service	BENZENE	FALSE	Light Liquid	FALSE	31-Oct-16	06-Feb-18	29-Nov-16	VIS	PPM Consulting Technician	UNCLASSIFIED	Leak Limit of 10,000
COKE	BLK230	602	NORTH REFLUX PUMP	02	Accessible	40 CFR 61 Subpart V	Pump	0	Standard Service	BENZENE	FALSE	Light Liquid	FALSE	31-Oct-16	21-Feb-18	29-Nov-16	VIS	PPM Consulting Technician	UNCLASSIFIED	Leak Limit of 10,000
COKE	BLK230	602	NORTH REFLUX PUMP	02	Accessible	40 CFR 61 Subpart V	Pump	0	Standard Service	BENZENE	FALSE	Light Liquid	FALSE	31-Oct-16	26-Feb-18	29-Nov-16	VIS	PPM Consulting Technician	UNCLASSIFIED	Leak Limit of 10,000
COKE	BLK230	602	NORTH REFLUX PUMP	02	Accessible	40 CFR 61 Subpart V	Pump	0	Standard Service	BENZENE	FALSE	Light Liquid	FALSE	31-Oct-16	05-Mar-18	29-Nov-16	VIS	PPM Consulting Technician	UNCLASSIFIED	Leak Limit of 10,000
COKE	BLK230	602	NORTH REFLUX PUMP	02	Accessible	40 CFR 61 Subpart V	Pump	0	Standard Service	BENZENE	FALSE	Light Liquid	FALSE	31-Oct-16	19-Mar-18	29-Nov-16	VIS	PPM Consulting Technician	UNCLASSIFIED	Leak Limit of 10,000
COKE	BLK230	602	NORTH REFLUX PUMP	02	Accessible	40 CFR 61 Subpart V	Pump	0	Standard Service	BENZENE	FALSE	Light Liquid	FALSE	31-Oct-16	28-Mar-18	29-Nov-16	VIS	PPM Consulting Technician	UNCLASSIFIED	Leak Limit of 10,000
COKE	BLK230	602	NORTH REFLUX PUMP	02	Accessible	40 CFR 61 Subpart V	Pump	0	Standard Service	BENZENE	FALSE	Light Liquid	FALSE	31-Oct-16	04-Apr-18	29-Nov-16	VIS	PPM Consulting Technician	UNCLASSIFIED	Leak Limit of 10,000
COKE	BLK230	602	NORTH REFLUX PUMP	02	Accessible	40 CFR 61 Subpart V	Pump	0	Standard Service	BENZENE	FALSE	Light Liquid	FALSE	31-Oct-16	09-Apr-18	29-Nov-16	VIS	PPM Consulting Technician	UNCLASSIFIED	Leak Limit of 10,000
COKE	BLK230	602	NORTH REFLUX PUMP	02	Accessible	40 CFR 61 Subpart V	Pump	0	Standard Service	BENZENE	FALSE	Light Liquid	FALSE	31-Oct-16	17-Apr-18	29-Nov-16	VIS	PPM Consulting Technician	UNCLASSIFIED	Leak Limit of 10,000
COKE	BLK230	602	NORTH REFLUX PUMP	02	Accessible	40 CFR 61 Subpart V	Pump	0	Standard Service	BENZENE	FALSE	Light Liquid	FALSE	31-Oct-16	02-May-18	29-Nov-16	VIS	PPM Consulting Technician	UNCLASSIFIED	Leak Limit of 10,000
COKE	BLK230	602	NORTH REFLUX PUMP	02	Accessible	40 CFR 61 Subpart V	Pump	0	Standard Service	BENZENE	FALSE	Light Liquid	FALSE	31-Oct-16	16-May-18	29-Nov-16	VIS	PPM Consulting Technician	UNCLASSIFIED	Leak Limit of 10,000
COKE	BLK230	602	NORTH REFLUX PUMP	02	Accessible	40 CFR 61 Subpart V	Pump	0	Standard Service	BENZENE	FALSE	Light Liquid	FALSE	31-Oct-16	21-May-18	29-Nov-16	VIS	PPM Consulting Technician	UNCLASSIFIED	Leak Limit of 10,000
COKE	BLK230	602	NORTH REFLUX PUMP	02	Accessible	40 CFR 61 Subpart V	Pump	0	Standard Service	BENZENE	FALSE	Light Liquid	FALSE	31-Oct-16	30-May-18	29-Nov-16	VIS	PPM Consulting Technician	UNCLASSIFIED	Leak Limit of 10,000
COKE	BLK235	601	SOUTH REFLUX PUMP	02	Accessible	40 CFR 61 Subpart V	Pump	0	Standard Service	BENZENE	FALSE	Light Liquid	FALSE	31-Oct-16	03-Jan-18	29-Nov-16	VIS	PPM Consulting Technician	UNCLASSIFIED	Leak Limit of 10,000
COKE	BLK235	601	SOUTH REFLUX PUMP	02	Accessible	40 CFR 61 Subpart V	Pump	0	Standard Service	BENZENE	FALSE	Light Liquid	FALSE	31-Oct-16	09-Jan-18	29-Nov-16	VIS	PPM Consulting Technician	UNCLASSIFIED	Leak Limit of 10,000
COKE	BLK235	601	SOUTH REFLUX PUMP	02	Accessible	40 CFR 61 Subpart V	Pump	0	Standard Service	BENZENE	FALSE	Light Liquid	FALSE	31-Oct-16	15-Jan-18	29-Nov-16	VIS	PPM Consulting Technician	UNCLASSIFIED	Leak Limit of 10,000
COKE	BLK235	601	SOUTH REFLUX PUMP	02	Accessible	40 CFR 61 Subpart V	Pump	0	Standard Service	BENZENE	FALSE	Light Liquid	FALSE	31-Oct-16	29-Jan-18	29-Nov-16	VIS	PPM Consulting Technician	UNCLASSIFIED	Leak Limit of 10,000
COKE	BLK235	601	SOUTH REFLUX PUMP	02	Accessible	40 CFR 61 Subpart V	Pump	0	Standard Service	BENZENE	FALSE	Light Liquid	FALSE	31-Oct-16	06-Feb-18	29-Nov-16	VIS	PPM Consulting Technician	UNCLASSIFIED	Leak Limit of 10,000
COKE	BLK235	601	SOUTH REFLUX PUMP	02	Accessible	40 CFR 61 Subpart V	Pump	0	Standard Service	BENZENE	FALSE	Light Liquid	FALSE	31-Oct-16	21-Feb-18	29-Nov-16	VIS	PPM Consulting Technician	UNCLASSIFIED	Leak Limit of 10,000
COKE	BLK235	601	SOUTH REFLUX PUMP	02	Accessible	40 CFR 61 Subpart V	Pump	0	Standard Service	BENZENE	FALSE	Light Liquid	FALSE	31-Oct-16	26-Feb-18	29-Nov-16	VIS	PPM Consulting Technician	UNCLASSIFIED	Leak Limit of 10,000
COKE	BLK235	601	SOUTH REFLUX PUMP	02	Accessible	40 CFR 61 Subpart V	Pump	0	Standard Service	BENZENE	FALSE	Light Liquid	FALSE	31-Oct-16	05-Mar-18	29-Nov-16	VIS	PPM Consulting Technician	UNCLASSIFIED	Leak Limit of 10,000
COKE	BLK235	601	SOUTH REFLUX PUMP	02	Accessible	40 CFR 61 Subpart V	Pump	0	Standard Service	BENZENE	FALSE	Light Liquid	FALSE	31-Oct-16	19-Mar-18	29-Nov-16	VIS	PPM Consulting Technician	UNCLASSIFIED	Leak Limit of 10,000
COKE	BLK235	601	SOUTH REFLUX PUMP	02	Accessible	40 CFR 61 Subpart V	Pump	0	Standard Service	BENZENE	FALSE	Light Liquid	FALSE	31-Oct-16	04-Apr-18	29-Nov-16	VIS	PPM Consulting Technician	UNCLASSIFIED	Leak Limit of 10,000
COKE	BLK235	601	SOUTH REFLUX PUMP	02	Accessible	40 CFR 61 Subpart V	Pump	0	Standard Service	BENZENE	FALSE	Light Liquid	FALSE	31-Oct-16	09-Apr-18	29-Nov-16	VIS	PPM Consulting Technician	UNCLASSIFIED	Leak Limit of 10,000
COKE	BLK235	601	SOUTH REFLUX PUMP	02	Accessible	40 CFR 61 Subpart V	Pump	0	Standard Service	BENZENE	FALSE	Light Liquid	FALSE	31-Oct-16	17-Apr-18	29-Nov-16	VIS	PPM Consulting Technician	UNCLASSIFIED	Leak Limit of 10,000
COKE	BLK235	601	SOUTH REFLUX PUMP	02	Accessible	40 CFR 61 Subpart V	Pump	0	Standard Service	BENZENE	FALSE	Light Liquid	FALSE	31-Oct-16	02-May-18	29-Nov-16	VIS	PPM Consulting Technician	UNCLASSIFIED	Leak Limit of 10,000
COKE	BLK235	601	SOUTH REFLUX PUMP	02	Accessible	40 CFR 61 Subpart V	Pump	0	Standard Service	BENZENE	FALSE	Light Liquid	FALSE	31-Oct-16	16-May-18	29-Nov-16	VIS	PPM Consulting Technician	UNCLASSIFIED	Leak Limit of 10,000
COKE	BLK235	601	SOUTH REFLUX PUMP	02	Accessible	40 CFR 61 Subpart V	Pump	0	Standard Service	BENZENE	FALSE	Light Liquid	FALSE	31-Oct-16	21-May-18	29-Nov-16	VIS	PPM Consulting Technician	UNCLASSIFIED	Leak Limit of 10,000
COKE	BLK235	601	SOUTH REFLUX PUMP	02	Accessible	40 CFR 61 Subpart V	Pump	0	Standard Service	BENZENE	FALSE	Light Liquid	FALSE	31-Oct-16	30-May-18	29-Nov-16	VIS	PPM Consulting Technician	UNCLASSIFIED	Leak Limit of 10,000
COKE	BLK25	236	LIGHT OIL LOADING PUMP	00	Accessible	40 CFR 61 Subpart V	Pump	0	Standard Service	BENZENE	FALSE	Light Liquid	FALSE	31-Oct-16	03-Jan-18	16-Nov-16	VIS	PPM Consulting Technician	UNCLASSIFIED	Leak Limit of 10,000
COKE	BLK25	236	LIGHT OIL LOADING PUMP	00	Accessible	40 CFR 61 Subpart V	Pump	0	Standard Service	BENZENE	FALSE	Light Liquid	FALSE	31-Oct-16	09-Jan-18	16-Nov-16	VIS	PPM Consulting Technician	UNCLASSIFIED	Leak Limit of 10,000
COKE	BLK25	236	LIGHT OIL LOADING PUMP	00	Accessible	40 CFR 61 Subpart V	Pump	0	Standard Service	BENZENE	FALSE	Light Liquid	FALSE	31-Oct-16	15-Jan-18	16-Nov-16	VIS	PPM Consulting Technician	UNCLASSIFIED	Leak Limit of 10,000
COKE	BLK25	236	LIGHT OIL LOADING PUMP	00	Accessible	40 CFR 61 Subpart V	Pump	0	Standard Service	BENZENE	FALSE	Light Liquid	FALSE	31-Oct-16	29-Jan-18	16-Nov-16	VIS	PPM Consulting Technician	UNCLASSIFIED	Leak Limit of 10,000
COKE	BLK25	236	LIGHT OIL LOADING PUMP	00	Accessible	40 CFR 61 Subpart V	Pump	0	Standard Service	BENZENE	FALSE	Light Liquid	FALSE	31-Oct-16	06-Feb-18	16-Nov-16	VIS	PPM Consulting Technician	UNCLASSIFIED	Leak Limit of 10,000
COKE	BLK25	236	LIGHT OIL LOADING PUMP	00	Accessible	40 CFR 61 Subpart V	Pump	0	Standard Service	BENZENE	FALSE	Light Liquid	FALSE	31-Oct-16	21-Feb-18	16-Nov-16	VIS	PPM Consulting Technician	UNCLASSIFIED	Leak Limit of 10,000
COKE	BLK25	236	LIGHT OIL LOADING PUMP	00	Accessible	40 CFR 61 Subpart V	Pump	0	Standard Service	BENZENE	FALSE	Light Liquid	FALSE	31-Oct-16	26-Feb-18	16-Nov-16	VIS	PPM Consulting Technician	UNCLASSIFIED	Leak Limit of 10,000
COKE	BLK25	236	LIGHT OIL LOADING PUMP	00	Accessible	40 CFR 61 Subpart V	Pump	0	Standard Service	BENZENE	FALSE	Light Liquid	FALSE	31-Oct-16	05-Mar-18	16-Nov-16	VIS	PPM Consulting Technician	UNCLASSIFIED	Leak Limit of 10,000

UNIT_CODE	TAG_ NUMBER	ROUTE	LOCATION	LEVEL	ACCESS_DESC	GROUP_DESC	EQUITYPE DESC	SIZE	CONFIG_DESC	PRODUCT_DESC	CLOSED_ VENT_SYSTEM	SERVICE_DESC	UNDER_300_ HOURS_SERVICE	DATE_ADDED	DATE_INSPECTED	DATE_IN_SERVICE	INSPTYPE _CODE	TECH_DESC	INSTRUM_DESC	LEAKLIM_DESC
COKE	BLK25	236	LIGHT OIL LOADING PUMP	00	Accessible	40 CFR 61 Subpart V	Pump	0	Standard Service	BENZENE	FALSE	Light Liquid	FALSE	31-Oct-16	19-Mar-18	16-Nov-16	VIS	PPM Consulting Technician	UNCLASSIFIED	Leak Limit of 10,000
COKE	BLK25	236	LIGHT OIL LOADING PUMP	00	Accessible	40 CFR 61 Subpart V	Pump	0	Standard Service	BENZENE	FALSE	Light Liquid	FALSE	31-Oct-16	28-Mar-18	16-Nov-16	VIS	PPM Consulting Technician	UNCLASSIFIED	Leak Limit of 10,000
COKE	BLK25	236	LIGHT OIL LOADING PUMP	00	Accessible	40 CFR 61 Subpart V	Pump	0	Standard Service	BENZENE	FALSE	Light Liquid	FALSE	31-Oct-16	04-Apr-18	16-Nov-16	VIS	PPM Consulting Technician	UNCLASSIFIED	Leak Limit of 10,000
COKE	BLK25	236	LIGHT OIL LOADING PUMP	00	Accessible	40 CFR 61 Subpart V	Pump	0	Standard Service	BENZENE	FALSE	Light Liquid	FALSE	31-Oct-16	09-Apr-18	16-Nov-16	VIS	PPM Consulting Technician	UNCLASSIFIED	Leak Limit of 10,000
COKE	BLK25	236	LIGHT OIL LOADING PUMP	00	Accessible	40 CFR 61 Subpart V	Pump	0	Standard Service	BENZENE	FALSE	Light Liquid	FALSE	31-Oct-16	17-Apr-18	16-Nov-16	VIS	PPM Consulting Technician	UNCLASSIFIED	Leak Limit of 10,000
COKE	BLK25	236	LIGHT OIL LOADING PUMP	00	Accessible	40 CFR 61 Subpart V	Pump	0	Standard Service	BENZENE	FALSE	Light Liquid	FALSE	31-Oct-16	02-May-18	16-Nov-16	VIS	PPM Consulting Technician	UNCLASSIFIED	Leak Limit of 10,000
COKE	BLK25	236	LIGHT OIL LOADING PUMP	00	Accessible	40 CFR 61 Subpart V	Pump	0	Standard Service	BENZENE	FALSE	Light Liquid	FALSE	31-Oct-16	16-May-18	16-Nov-16	VIS	PPM Consulting Technician	UNCLASSIFIED	Leak Limit of 10,000
COKE	BLK25	236	LIGHT OIL LOADING PUMP	00	Accessible	40 CFR 61 Subpart V	Pump	0	Standard Service	BENZENE	FALSE	Light Liquid	FALSE	31-Oct-16	21-May-18	16-Nov-16	VIS	PPM Consulting Technician	UNCLASSIFIED	Leak Limit of 10,000
COKE	BLK25	236	LIGHT OIL LOADING PUMP	00	Accessible	40 CFR 61 Subpart V	Pump	0	Standard Service	BENZENE	FALSE	Light Liquid	FALSE	31-Oct-16	30-May-18	16-Nov-16	VIS	PPM Consulting Technician	UNCLASSIFIED	Leak Limit of 10,000
COKE	BLK305	1078	PVRV PRIMARY COOLER SUMP W/2FL & 9WC	00	Accessible	40 CFR 61 Subpart V	Pump	0	Standard Service	BENZENE	FALSE	Light Liquid	FALSE	31-Oct-16	03-Jan-18	29-Nov-16	VIS	PPM Consulting Technician	UNCLASSIFIED	Leak Limit of 10,000
COKE	BLK305	1078	PVRV PRIMARY COOLER SUMP W/2FL & 9WC	00	Accessible	40 CFR 61 Subpart V	Pump	0	Standard Service	BENZENE	FALSE	Light Liquid	FALSE	31-Oct-16	09-Jan-18	29-Nov-16	VIS	PPM Consulting Technician	UNCLASSIFIED	Leak Limit of 10,000
COKE	BLK305	1078	PVRV PRIMARY COOLER SUMP W/2FL & 9WC	00	Accessible	40 CFR 61 Subpart V	Pump	0	Standard Service	BENZENE	FALSE	Light Liquid	FALSE	31-Oct-16	15-Jan-18	29-Nov-16	VIS	PPM Consulting Technician	UNCLASSIFIED	Leak Limit of 10,000
COKE	BLK305	1078	PVRV PRIMARY COOLER SUMP W/2FL & 9WC	00	Accessible	40 CFR 61 Subpart V	Pump	0	Standard Service	BENZENE	FALSE	Light Liquid	FALSE	31-Oct-16	29-Jan-18	29-Nov-16	VIS	PPM Consulting Technician	UNCLASSIFIED	Leak Limit of 10,000
COKE	BLK305	1078	PVRV PRIMARY COOLER SUMP W/2FL & 9WC	00	Accessible	40 CFR 61 Subpart V	Pump	0	Standard Service	BENZENE	FALSE	Light Liquid	FALSE	31-Oct-16	06-Feb-18	29-Nov-16	VIS	PPM Consulting Technician	UNCLASSIFIED	Leak Limit of 10,000
COKE	BLK305	1078	PVRV PRIMARY COOLER SUMP W/2FL & 9WC	00	Accessible	40 CFR 61 Subpart V	Pump	0	Standard Service	BENZENE	FALSE	Light Liquid	FALSE	31-Oct-16	21-Feb-18	29-Nov-16	VIS	PPM Consulting Technician	UNCLASSIFIED	Leak Limit of 10,000
COKE	BLK305	1078	PVRV PRIMARY COOLER SUMP W/2FL & 9WC	00	Accessible	40 CFR 61 Subpart V	Pump	0	Standard Service	BENZENE	FALSE	Light Liquid	FALSE	31-Oct-16	26-Feb-18	29-Nov-16	VIS	PPM Consulting Technician	UNCLASSIFIED	Leak Limit of 10,000
COKE	BLK305	1078	PVRV PRIMARY COOLER SUMP W/2FL & 9WC	00	Accessible	40 CFR 61 Subpart V	Pump	0	Standard Service	BENZENE	FALSE	Light Liquid	FALSE	31-Oct-16	05-Mar-18	29-Nov-16	VIS	PPM Consulting Technician	UNCLASSIFIED	Leak Limit of 10,000
COKE	BLK58	212	LIGHT OIL INJECTION PUMP	03	Accessible	40 CFR 61 Subpart V	Pump	0	Standard Service	BENZENE	FALSE	Light Liquid	FALSE	31-Oct-16	03-Jan-18	16-Nov-16	VIS	PPM Consulting Technician	UNCLASSIFIED	Leak Limit of 10,000
COKE	BLK58	212	LIGHT OIL INJECTION PUMP	03	Accessible	40 CFR 61 Subpart V	Pump	0	Standard Service	BENZENE	FALSE	Light Liquid	FALSE	31-Oct-16	09-Jan-18	16-Nov-16	VIS	PPM Consulting Technician	UNCLASSIFIED	Leak Limit of 10,000
COKE	BLK58	212	LIGHT OIL INJECTION PUMP	03	Accessible	40 CFR 61 Subpart V	Pump	0	Standard Service	BENZENE	FALSE	Light Liquid	FALSE	31-Oct-16	15-Jan-18	16-Nov-16	VIS	PPM Consulting Technician	UNCLASSIFIED	Leak Limit of 10,000
COKE	BLK58	212	LIGHT OIL INJECTION PUMP	03	Accessible	40 CFR 61 Subpart V	Pump	0	Standard Service	BENZENE	FALSE	Light Liquid	FALSE	31-Oct-16	29-Jan-18	16-Nov-16	VIS	PPM Consulting Technician	UNCLASSIFIED	Leak Limit of 10,000
COKE	BLK58	212	LIGHT OIL INJECTION PUMP	03	Accessible	40 CFR 61 Subpart V	Pump	0	Standard Service	BENZENE	FALSE	Light Liquid	FALSE	31-Oct-16	06-Feb-18	16-Nov-16	VIS	PPM Consulting Technician	UNCLASSIFIED	Leak Limit of 10,000
COKE	BLK58	212	LIGHT OIL INJECTION PUMP	03	Accessible	40 CFR 61 Subpart V	Pump	0	Standard Service	BENZENE	FALSE	Light Liquid	FALSE	31-Oct-16	21-Feb-18	16-Nov-16	VIS	PPM Consulting Technician	UNCLASSIFIED	Leak Limit of 10,000
COKE	BLK58	212	LIGHT OIL INJECTION PUMP	03	Accessible	40 CFR 61 Subpart V	Pump	0	Standard Service	BENZENE	FALSE	Light Liquid	FALSE	31-Oct-16	26-Feb-18	16-Nov-16	VIS	PPM Consulting Technician	UNCLASSIFIED	Leak Limit of 10,000
COKE	BLK58	212	LIGHT OIL INJECTION PUMP	03	Accessible	40 CFR 61 Subpart V	Pump	0	Standard Service	BENZENE	FALSE	Light Liquid	FALSE	31-Oct-16	05-Mar-18	16-Nov-16	VIS	PPM Consulting Technician	UNCLASSIFIED	Leak Limit of 10,000
COKE	BLK58	212	LIGHT OIL INJECTION PUMP	03	Accessible	40 CFR 61 Subpart V	Pump	0	Standard Service	BENZENE	FALSE	Light Liquid	FALSE	31-Oct-16	19-Mar-18	16-Nov-16	VIS	PPM Consulting Technician	UNCLASSIFIED	Leak Limit of 10,000
COKE	BLK58	212	LIGHT OIL INJECTION PUMP	03	Accessible	40 CFR 61 Subpart V	Pump	0	Standard Service	BENZENE	FALSE	Light Liquid	FALSE	31-Oct-16	28-Mar-18	16-Nov-16	VIS	PPM Consulting Technician	UNCLASSIFIED	Leak Limit of 10,000
COKE	BLK58	212	LIGHT OIL INJECTION PUMP	03	Accessible	40 CFR 61 Subpart V	Pump	0	Standard Service	BENZENE	FALSE	Light Liquid	FALSE	31-Oct-16	04-Apr-18	16-Nov-16	VIS	PPM Consulting Technician	UNCLASSIFIED	Leak Limit of 10,000
COKE	BLK58	212	LIGHT OIL INJECTION PUMP	03	Accessible	40 CFR 61 Subpart V	Pump	0	Standard Service	BENZENE	FALSE	Light Liquid	FALSE	31-Oct-16	09-Apr-18	16-Nov-16	VIS	PPM Consulting Technician	UNCLASSIFIED	Leak Limit of 10,000
COKE	BLK58	212	LIGHT OIL INJECTION PUMP	03	Accessible	40 CFR 61 Subpart V	Pump	0	Standard Service	BENZENE	FALSE	Light Liquid	FALSE	31-Oct-16	17-Apr-18	16-Nov-16	VIS	PPM Consulting Technician	UNCLASSIFIED	Leak Limit of 10,000
COKE	BLK58	212	LIGHT OIL INJECTION PUMP	03	Accessible	40 CFR 61 Subpart V	Pump	0	Standard Service	BENZENE	FALSE	Light Liquid	FALSE	31-Oct-16	02-May-18	16-Nov-16	VIS	PPM Consulting Technician	UNCLASSIFIED	Leak Limit of 10,000
COKE	BLK58	212	LIGHT OIL INJECTION PUMP	03	Accessible	40 CFR 61 Subpart V	Pump	0	Standard Service	BENZENE	FALSE	Light Liquid	FALSE	31-Oct-16	16-May-18	16-Nov-16	VIS	PPM Consulting Technician	UNCLASSIFIED	Leak Limit of 10,000
COKE	BLK58	212	LIGHT OIL INJECTION PUMP	03	Accessible	40 CFR 61 Subpart V	Pump	0	Standard Service	BENZENE	FALSE	Light Liquid	FALSE	31-Oct-16	21-May-18	16-Nov-16	VIS	PPM Consulting Technician	UNCLASSIFIED	Leak Limit of 10,000
COKE	BLK58	212	LIGHT OIL INJECTION PUMP	03	Accessible	40 CFR 61 Subpart V	Pump	0	Standard Service	BENZENE	FALSE	Light Liquid	FALSE	31-Oct-16	30-May-18	16-Nov-16	VIS	PPM Consulting Technician	UNCLASSIFIED	Leak Limit of 10,000
COKE	BLK75	459	PUMP @ FINAL COOLER BOTTOM	03	Accessible	40 CFR 61 Subpart V	Pump	0	Standard Service	BENZENE	FALSE	Light Liquid	FALSE	31-Oct-16	03-Jan-18	29-Nov-16	VIS	PPM Consulting Technician	UNCLASSIFIED	Leak Limit of 10,000
COKE	BLK75	459	PUMP @ FINAL COOLER BOTTOM	03	Accessible	40 CFR 61 Subpart V	Pump	0	Standard Service	BENZENE	FALSE	Light Liquid	FALSE	31-Oct-16	09-Jan-18	29-Nov-16	VIS	PPM Consulting Technician	UNCLASSIFIED	Leak Limit of 10,000
COKE	BLK75	459	PUMP @ FINAL COOLER BOTTOM	03	Accessible	40 CFR 61 Subpart V	Pump	0	Standard Service	BENZENE	FALSE	Light Liquid	FALSE	31-Oct-16	15-Jan-18	29-Nov-16	VIS	PPM Consulting Technician	UNCLASSIFIED	Leak Limit of 10,000
COKE	BLK75	459	PUMP @ FINAL COOLER BOTTOM	03	Accessible	40 CFR 61 Subpart V	Pump	0	Standard Service	BENZENE	FALSE	Light Liquid	FALSE	31-Oct-16	29-Jan-18	29-Nov-16	VIS	PPM Consulting Technician	UNCLASSIFIED	Leak Limit of 10,000
COKE	BLK75	459	PUMP @ FINAL COOLER BOTTOM	03	Accessible	40 CFR 61 Subpart V	Pump	0	Standard Service	BENZENE	FALSE	Light Liquid	FALSE	31-Oct-16	06-Feb-18	29-Nov-16	VIS	PPM Consulting Technician	UNCLASSIFIED	Leak Limit of 10,000
COKE	BLK75	459	PUMP @ FINAL COOLER BOTTOM	03	Accessible	40 CFR 61 Subpart V	Pump	0	Standard Service	BENZENE	FALSE	Light Liquid	FALSE	31-Oct-16	21-Feb-18	29-Nov-16	VIS	PPM Consulting Technician	UNCLASSIFIED	Leak Limit of 10,000
COKE	BLK75	459	PUMP @ FINAL COOLER BOTTOM	03	Accessible	40 CFR 61 Subpart V	Pump	0	Standard Service	BENZENE	FALSE	Light Liquid	FALSE	31-Oct-16	26-Feb-18	29-Nov-16	VIS	PPM Consulting Technician	UNCLASSIFIED	Leak Limit of 10,000
COKE	BLK75	459	PUMP @ FINAL COOLER BOTTOM	03	Accessible	40 CFR 61 Subpart V	Pump	0	Standard Service	BENZENE	FALSE	Light Liquid	FALSE	31-Oct-16	05-Mar-18	29-Nov-16	VIS	PPM Consulting Technician	UNCLASSIFIED	Leak Limit of 10,000
COKE	BLK75	459	PUMP @ FINAL COOLER BOTTOM	03	Accessible	40 CFR 61 Subpart V	Pump	0	Standard Service	BENZENE	FALSE	Light Liquid	FALSE	31-Oct-16	19-Mar-18	29-Nov-16	VIS	PPM Consulting Technician	UNCLASSIFIED	Leak Limit of 10,000
COKE	BLK75	459	PUMP @ FINAL COOLER BOTTOM	03	Accessible	40 CFR 61 Subpart V	Pump	0	Standard Service	BENZENE	FALSE	Light Liquid	FALSE	31-Oct-16	28-Mar-18	29-Nov-16	VIS	PPM Consulting Technician	UNCLASSIFIED	Leak Limit of 10,000
COKE	BLK75	459	PUMP @ FINAL COOLER BOTTOM	03	Accessible	40 CFR 61 Subpart V	Pump	0	Standard Service	BENZENE	FALSE	Light Liquid	FALSE	31-Oct-16	04-Apr-18	29-Nov-16	VIS	PPM Consulting Technician	UNCLASSIFIED	Leak Limit of 10,000
COKE	BLK75	459	PUMP @ FINAL COOLER BOTTOM	03	Accessible	40 CFR 61 Subpart V	Pump	0	Standard Service	BENZENE	FALSE	Light Liquid	FALSE	31-Oct-16	09-Apr-18	29-Nov-16	VIS	PPM Consulting Technician	UNCLASSIFIED	Leak Limit of 10,000
COKE	BLK75	459	PUMP @ FINAL COOLER BOTTOM	03	Accessible	40 CFR 61 Subpart V	Pump	0	Standard Service	BENZENE	FALSE	Light Liquid	FALSE	31-Oct-16	17-Apr-18	29-Nov-16	VIS	PPM Consulting Technician	UNCLASSIFIED	Leak Limit of 10,000
COKE	BLK75	459	PUMP @ FINAL COOLER BOTTOM	03	Accessible	40 CFR 61 Subpart V	Pump	0	Standard Service	BENZENE	FALSE	Light Liquid	FALSE	31-Oct-16	02-May-18	29-Nov-16	VIS	PPM Consulting Technician	UNCLASSIFIED	Leak Limit of 10,000
COKE	BLK75	459	PUMP @ FINAL COOLER BOTTOM	03	Accessible	40 CFR 61 Subpart V	Pump	0	Standard Service	BENZENE	FALSE	Light Liquid	FALSE	31-Oct-16	16-May-18	29-Nov-16	VIS	PPM Consulting Technician	UNCLASSIFIED	Leak Limit of 10,000
COKE	BLK75	459	PUMP @ FINAL COOLER BOTTOM	03	Accessible	40 CFR 61 Subpart V	Pump	0	Standard Service	BENZENE	FALSE	Light Liquid	FALSE	31-Oct-16	21-May-18	29-Nov-16	VIS	PPM Consulting Technician	UNCLASSIFIED	Leak Limit of 10,000
COKE	BLK75	459	PUMP @ FINAL COOLER BOTTOM	03	Accessible	40 CFR 61 Subpart V	Pump	0	Standard Service	BENZENE	FALSE	Light Liquid	FALSE	31-Oct-16	30-May-18	29-Nov-16	VIS	PPM Consulting Technician	UNCLASSIFIED	Leak Limit of 10,000
COKE	BLK79	460	PUMP @ FINAL COOLER BOTTOM	03	Accessible	40 CFR 61 Subpart V	Pump	0	Standard Service	BENZENE	FALSE	Light Liquid	FALSE	31-Oct-16	03-Jan-18	29-Nov-16	VIS	PPM Consulting Technician	UNCLASSIFIED	Leak Limit of 10,000
COKE	BLK79	460	PUMP @ FINAL COOLER BOTTOM	03	Accessible	40 CFR 61 Subpart V	Pump	0	Standard Service	BENZENE	FALSE	Light Liquid	FALSE	31-Oct-16	09-Jan-18	29-Nov-16	VIS	PPM Consulting Technician	UNCLASSIFIED	Leak Limit of 10,000
COKE	BLK79	460	PUMP @ FINAL COOLER BOTTOM	03	Accessible	40 CFR 61 Subpart V	Pump	0	Standard Service	BENZENE	FALSE	Light Liquid	FALSE	31-Oct-16	15-Jan-18	29-Nov-16	VIS	PPM Consulting Technician	UNCLASSIFIED	Leak Limit of 10,000
COKE	BLK79	460	PUMP @ FINAL COOLER BOTTOM	03	Accessible	40 CFR 61 Subpart V	Pump	0	Standard Service	BENZENE	FALSE	Light Liquid	FALSE	31-Oct-16	29-Jan-18	29-Nov-16	VIS	PPM Consulting Technician	UNCLASSIFIED	Leak Limit of 10,000
COKE	BLK79	460	PUMP @ FINAL COOLER BOTTOM	03	Accessible	40 CFR 61 Subpart V	Pump	0	Standard Service	BENZENE	FALSE	Light Liquid	FALSE	31-Oct-16	06-Feb-18	29-Nov-16	VIS	PPM Consulting Technician	UNCLASSIFIED	Leak Limit of 10,000
COKE	BLK79	460	PUMP @ FINAL COOLER BOTTOM	03	Accessible	40 CFR 61 Subpart V	Pump	0	Standard Service	BENZENE	FALSE	Light Liquid	FALSE	31-Oct-16	21-Feb-18	29-Nov-16	VIS	PPM Consulting Technician	UNCLASSIFIED	Leak Limit of 10,000
COKE	BLK79	460	PUMP @ FINAL COOLER BOTTOM	03	Accessible	40 CFR 61 Subpart V	Pump	0	Standard Service	BENZENE	FALSE	Light Liquid	FALSE	31-Oct-16	26-Feb-18	29-Nov-16	VIS	PPM Consulting Technician	UNCLASSIFIED	Leak Limit of 10,000
COKE	BLK79	460	PUMP @ FINAL COOLER BOTTOM	03	Accessible	40 CFR 61 Subpart V	Pump	0	Standard Service	BENZENE	FALSE	Light Liquid	FALSE	31-Oct-16	05-Mar-18	29-Nov-16	VIS	PPM Consulting Technician	UNCLASSIFIED	Leak Limit of 10,000
COKE	BLK79	460	PUMP @ FINAL COOLER BOTTOM	03	Accessible	40 CFR 61 Subpart V	Pump	0	Standard Service	BENZENE	FALSE	Light Liquid	FALSE	31-Oct-16	19-Mar-18	29-Nov-16	VIS	PPM Consulting Technician	UNCLASSIFIED	Leak Limit of 10,000
COKE	BLK79	460	PUMP @ FINAL COOLER BOTTOM	03	Accessible	40 CFR 61 Subpart V	Pump	0	Standard Service	BENZENE	FALSE	Light Liquid	FALSE	31-Oct-16	28-Mar-18	29-Nov-16	VIS	PPM Consulting Technician	UNCLASSIFIED	Leak Limit of 10,000
COKE	BLK79	460	PUMP @ FINAL COOLER BOTTOM	03	Accessible	40 CFR 61 Subpart V	Pump	0	Standard Service	BENZENE	FALSE	Light Liquid	FALSE	31-Oct-16	04-Apr-18	29-Nov-16	VIS	PPM Consulting Technician	UNCLASSIFIED	Leak Limit of 10,000
COKE	BLK79	460	PUMP @ FINAL COOLER BOTTOM	03	Accessible	40 CFR 61 Subpart V	Pump	0	Standard Service	BENZENE	FALSE	Light Liquid	FALSE	31-Oct-16	09-Apr-18	29-Nov-16	VIS	PPM Consulting Technician	UNCLASSIFIED	Leak Limit of 10,000
COKE	BLK79	460	PUMP @ FINAL COOLER BOTTOM	03	Accessible	40 CFR 61 Subpart V	Pump	0	Standard Service	BENZENE	FALSE	Light Liquid	FALSE	31-Oct-16	17-Apr-18	29-Nov-16	VIS	PPM Consulting Technician	UNCLASSIFIED	Leak Limit of 10,000
COKE	BLK79	460	PUMP @ FINAL COOLER BOTTOM	03	Accessible	40 CFR 61 Subpart V	Pump	0	Standard Service	BENZENE	FALSE	Light Liquid	FALSE	31-Oct-16	02-May-18	29-Nov-16	VIS	PPM Consulting Technician	UNCLASSIFIED	Leak Limit of 10,000
COKE	BLK79	460	PUMP @ FINAL COOLER BOTTOM	03	Accessible	40 CFR 61 Subpart V	Pump	0	Standard Service	BENZENE	FALSE	Light Liquid	FALSE	31-Oct-16	16-May-18	29-Nov-16	VIS	PPM Consulting Technician	UNCLASSIFIED	Leak Limit of 10,000
COKE	BLK79	460	PUMP @ FINAL COOLER BOTTOM	03	Accessible	40 CFR 61 Subpart V	Pump	0	Standard Service	BENZENE	FALSE	Light Liquid	FALSE	31-Oct-16	21-May-18	29-Nov-16	VIS	PPM Consulting Technician	UNCLASSIFIED	Leak Limit of 10,000
COKE	BLK79	460	PUMP @ FINAL COOLER BOTTOM	03	Accessible	40 CFR 61 Subpart V	Pump	0	Standard Service	BENZENE	FALSE	Light Liquid	FALSE	31-Oct-16	30-May-18	29-Nov-16	VIS	PPM Consulting Technician	UNCLASSIFIED	Leak Limit of 10,000
COKE	R106	429	BECKERS WASH OIL DECANTER PUMP	01	Accessible	40 CFR 61 Subpart L	Pump	0	Standard Service	UNCLASSIFIED	FALSE	Light Liquid	FALSE	24-Oct-16	03-Jan-18	23-Nov-16	VIS	PPM Consulting Technician	UNCLASSIFIED	Leak Limit of 500
COKE	R106	429	BECKERS WASH OIL DECANTER PUMP	01	Accessible	40 CFR 61 Subpart L	Pump	0	Standard Service	UNCLASSIFIED	FALSE	Light Liquid	FALSE	24-Oct-16	09-Jan-18	23-Nov-16	VIS	PPM Consulting Technician	UNCLASSIFIED	Leak Limit of 500
COKE	R106	429	BECKERS WASH OIL DECANTER PUMP	01	Accessible	40 CFR 61 Subpart L	Pump	0	Standard Service	UNCLASSIFIED	FALSE	Light Liquid	FALSE	24-Oct-16	15-Jan-18	23-Nov-16	VIS	PPM Consulting Technician	UNCLASSIFIED	Leak Limit of 500
COKE	R106	429	BECKERS WASH OIL DECANTER PUMP	01	Accessible	40 CFR 61 Subpart L	Pump	0	Standard Service	UNCLASSIFIED	FALSE	Light Liquid	FALSE	24-Oct-16	29-Jan-18	23-Nov-16	VIS	PPM Consulting Technician	UNCLASSIFIED	Leak Limit of 500
COKE	R106	429	BECKERS WASH OIL DECANTER PUMP	01	Accessible	40 CFR 61 Subpart L	Pump	0	Standard Service	UNCLASSIFIED	FALSE	Light Liquid	FALSE	24-Oct-16	06-Feb-18	23-Nov-16	VIS	PPM Consulting Technician	UNCLASSIFIED	Leak Limit of 500
COKE	R106	429	BECKERS WASH OIL DECANTER PUMP	01	Accessible	40 CFR 61 Subpart L	Pump	0	Standard Service	UNCLASSIFIED	FALSE	Light Liquid	FALSE	24-Oct-16	21-Feb-18	23-Nov-16	VIS	PPM Consulting Technician	UNCLASSIFIED	Leak Limit of 500
COKE	R106	429	BECKERS WASH OIL DECANTER PUMP	01	Accessible	40 CFR 61 Subpart L	Pump	0	Standard Service	UNCLASSIFIED	FALSE	Light Liquid	FALSE	24-Oct-16	26-Feb-18	23-Nov-16	VIS	PPM Consulting Technician	UNCLASSIFIED	Leak Limit of 500

UNIT_CODE	TAG_ NUMBER	ROUTE	LOCATION	LEVEL	ACCESS_DESC	GROUP_DESC	EQUITYPE DESC	SIZE	CONFIG_DESC	PRODUCT_DESC	CLOSED_ VENT_SYSTEM	SERVICE_DESC	UNDER_300_ HOURS_SERVICE	DATE_ADDED	DATE_INSPECTED	DATE_IN_SERVICE	INSPTYPE _CODE	TECH_DESC	INSTRUM_DESC	LEAKLIM_DESC
COKE	R106	429	BECKERS WASH OIL DECANTER PUMP	01	Accessible	40 CFR 61 Subpart L	Pump	0	Standard Service	UNCLASSIFIED	FALSE	Light Liquid	FALSE	24-Oct-16	05-Mar-18	23-Nov-16	VIS	PPM Consulting Technician	UNCLASSIFIED	Leak Limit of 500
COKE	R106	429	BECKERS WASH OIL DECANTER PUMP	01	Accessible	40 CFR 61 Subpart L	Pump	0	Standard Service	UNCLASSIFIED	FALSE	Light Liquid	FALSE	24-Oct-16	19-Mar-18	23-Nov-16	VIS	PPM Consulting Technician	UNCLASSIFIED	Leak Limit of 500
COKE	R106	429	BECKERS WASH OIL DECANTER PUMP	01	Accessible	40 CFR 61 Subpart L	Pump	0	Standard Service	UNCLASSIFIED	FALSE	Light Liquid	FALSE	24-Oct-16	28-Mar-18	23-Nov-16	VIS	PPM Consulting Technician	UNCLASSIFIED	Leak Limit of 500
COKE	R106	429	BECKERS WASH OIL DECANTER PUMP	01	Accessible	40 CFR 61 Subpart L	Pump	0	Standard Service	UNCLASSIFIED	FALSE	Light Liquid	FALSE	24-Oct-16	04-Apr-18	23-Nov-16	VIS	PPM Consulting Technician	UNCLASSIFIED	Leak Limit of 500
COKE	R106	429	BECKERS WASH OIL DECANTER PUMP	01	Accessible	40 CFR 61 Subpart L	Pump	0	Standard Service	UNCLASSIFIED	FALSE	Light Liquid	FALSE	24-Oct-16	09-Apr-18	23-Nov-16	VIS	PPM Consulting Technician	UNCLASSIFIED	Leak Limit of 500
COKE	R106	429	BECKERS WASH OIL DECANTER PUMP	01	Accessible	40 CFR 61 Subpart L	Pump	0	Standard Service	UNCLASSIFIED	FALSE	Light Liquid	FALSE	24-Oct-16	17-Apr-18	23-Nov-16	VIS	PPM Consulting Technician	UNCLASSIFIED	Leak Limit of 500
COKE	R106	429	BECKERS WASH OIL DECANTER PUMP	01	Accessible	40 CFR 61 Subpart L	Pump	0	Standard Service	UNCLASSIFIED	FALSE	Light Liquid	FALSE	24-Oct-16	02-May-18	23-Nov-16	VIS	PPM Consulting Technician	UNCLASSIFIED	Leak Limit of 500
COKE	R106	429	BECKERS WASH OIL DECANTER PUMP	01	Accessible	40 CFR 61 Subpart L	Pump	0	Standard Service	UNCLASSIFIED	FALSE	Light Liquid	FALSE	24-Oct-16	16-May-18	23-Nov-16	VIS	PPM Consulting Technician	UNCLASSIFIED	Leak Limit of 500
COKE	R106	429	BECKERS WASH OIL DECANTER PUMP	01	Accessible	40 CFR 61 Subpart L	Pump	0	Standard Service	UNCLASSIFIED	FALSE	Light Liquid	FALSE	24-Oct-16	21-May-18	23-Nov-16	VIS	PPM Consulting Technician	UNCLASSIFIED	Leak Limit of 500
COKE	R106	429	BECKERS WASH OIL DECANTER PUMP	01	Accessible	40 CFR 61 Subpart L	Pump	0	Standard Service	UNCLASSIFIED	FALSE	Light Liquid	FALSE	24-Oct-16	30-May-18	23-Nov-16	VIS	PPM Consulting Technician	UNCLASSIFIED	Leak Limit of 500
COKE	R117	1276	TAR LOADING PUMP WEST	01	Accessible	40 CFR 61 Subpart L	Pump	0	Standard Service	UNCLASSIFIED	FALSE	Light Liquid	FALSE	24-Oct-16	03-Jan-18	23-Nov-16	VIS	PPM Consulting Technician	UNCLASSIFIED	Leak Limit of 500
COKE	R117	1276	TAR LOADING PUMP WEST	01	Accessible	40 CFR 61 Subpart L	Pump	0	Standard Service	UNCLASSIFIED	FALSE	Light Liquid	FALSE	24-Oct-16	09-Jan-18	23-Nov-16	VIS	PPM Consulting Technician	UNCLASSIFIED	Leak Limit of 500
COKE	R117	1276	TAR LOADING PUMP WEST	01	Accessible	40 CFR 61 Subpart L	Pump	0	Standard Service	UNCLASSIFIED	FALSE	Light Liquid	FALSE	24-Oct-16	15-Jan-18	23-Nov-16	VIS	PPM Consulting Technician	UNCLASSIFIED	Leak Limit of 500
COKE	R117	1276	TAR LOADING PUMP WEST	01	Accessible	40 CFR 61 Subpart L	Pump	0	Standard Service	UNCLASSIFIED	FALSE	Light Liquid	FALSE	24-Oct-16	29-Jan-18	23-Nov-16	VIS	PPM Consulting Technician	UNCLASSIFIED	Leak Limit of 500
COKE	R117	1276	TAR LOADING PUMP WEST	01	Accessible	40 CFR 61 Subpart L	Pump	0	Standard Service	UNCLASSIFIED	FALSE	Light Liquid	FALSE	24-Oct-16	06-Feb-18	23-Nov-16	VIS	PPM Consulting Technician	UNCLASSIFIED	Leak Limit of 500
COKE	R117	1276	TAR LOADING PUMP WEST	01	Accessible	40 CFR 61 Subpart L	Pump	0	Standard Service	UNCLASSIFIED	FALSE	Light Liquid	FALSE	24-Oct-16	04-Apr-18	23-Nov-16	VIS	PPM Consulting Technician	UNCLASSIFIED	Leak Limit of 500
COKE	R117	1276	TAR LOADING PUMP WEST	01	Accessible	40 CFR 61 Subpart L	Pump	0	Standard Service	UNCLASSIFIED	FALSE	Light Liquid	FALSE	24-Oct-16	09-Apr-18	23-Nov-16	VIS	PPM Consulting Technician	UNCLASSIFIED	Leak Limit of 500
COKE	R117	1276	TAR LOADING PUMP WEST	01	Accessible	40 CFR 61 Subpart L	Pump	0	Standard Service	UNCLASSIFIED	FALSE	Light Liquid	FALSE	24-Oct-16	17-Apr-18	23-Nov-16	VIS	PPM Consulting Technician	UNCLASSIFIED	Leak Limit of 500
COKE	R117	1276	TAR LOADING PUMP WEST	01	Accessible	40 CFR 61 Subpart L	Pump	0	Standard Service	UNCLASSIFIED	FALSE	Light Liquid	FALSE	24-Oct-16	02-May-18	23-Nov-16	VIS	PPM Consulting Technician	UNCLASSIFIED	Leak Limit of 500
COKE	R117	1276	TAR LOADING PUMP WEST	01	Accessible	40 CFR 61 Subpart L	Pump	0	Standard Service	UNCLASSIFIED	FALSE	Light Liquid	FALSE	24-Oct-16	16-May-18	23-Nov-16	VIS	PPM Consulting Technician	UNCLASSIFIED	Leak Limit of 500
COKE	R117	1276	TAR LOADING PUMP WEST	01	Accessible	40 CFR 61 Subpart L	Pump	0	Standard Service	UNCLASSIFIED	FALSE	Light Liquid	FALSE	24-Oct-16	21-Feb-18	23-Nov-16	VIS	PPM Consulting Technician	UNCLASSIFIED	Leak Limit of 500
COKE	R117	1276	TAR LOADING PUMP WEST	01	Accessible	40 CFR 61 Subpart L	Pump	0	Standard Service	UNCLASSIFIED	FALSE	Light Liquid	FALSE	24-Oct-16	26-Feb-18	23-Nov-16	VIS	PPM Consulting Technician	UNCLASSIFIED	Leak Limit of 500
COKE	R117	1276	TAR LOADING PUMP WEST	01	Accessible	40 CFR 61 Subpart L	Pump	0	Standard Service	UNCLASSIFIED	FALSE	Light Liquid	FALSE	24-Oct-16	05-Mar-18	23-Nov-16	VIS	PPM Consulting Technician	UNCLASSIFIED	Leak Limit of 500
COKE	R117	1276	TAR LOADING PUMP WEST	01	Accessible	40 CFR 61 Subpart L	Pump	0	Standard Service	UNCLASSIFIED	FALSE	Light Liquid	FALSE	24-Oct-16	19-Mar-18	23-Nov-16	VIS	PPM Consulting Technician	UNCLASSIFIED	Leak Limit of 500
COKE	R117	1276	TAR LOADING PUMP WEST	01	Accessible	40 CFR 61 Subpart L	Pump	0	Standard Service	UNCLASSIFIED	FALSE	Light Liquid	FALSE	24-Oct-16	28-Mar-18	23-Nov-16	VIS	PPM Consulting Technician	UNCLASSIFIED	Leak Limit of 500
COKE	R117	1276	TAR LOADING PUMP WEST	01	Accessible	40 CFR 61 Subpart L	Pump	0	Standard Service	UNCLASSIFIED	FALSE	Light Liquid	FALSE	24-Oct-16	21-May-18	23-Nov-16	VIS	PPM Consulting Technician	UNCLASSIFIED	Leak Limit of 500
COKE	R117	1276	TAR LOADING PUMP WEST	01	Accessible	40 CFR 61 Subpart L	Pump	0	Standard Service	UNCLASSIFIED	FALSE	Light Liquid	FALSE	24-Oct-16	30-May-18	23-Nov-16	VIS	PPM Consulting Technician	UNCLASSIFIED	Leak Limit of 500
COKE	R184	807	WASH OIL PUMP @ SCRUBBERS	03	Accessible	40 CFR 61 Subpart L	Pump	0	Standard Service	UNCLASSIFIED	FALSE	Light Liquid	FALSE	24-Oct-16	29-Jan-18	23-Nov-16	VIS	PPM Consulting Technician	UNCLASSIFIED	Leak Limit of 500
COKE	R184	807	WASH OIL PUMP @ SCRUBBERS	03	Accessible	40 CFR 61 Subpart L	Pump	0	Standard Service	UNCLASSIFIED	FALSE	Light Liquid	FALSE	24-Oct-16	06-Feb-18	23-Nov-16	VIS	PPM Consulting Technician	UNCLASSIFIED	Leak Limit of 500
COKE	R184	807	WASH OIL PUMP @ SCRUBBERS	03	Accessible	40 CFR 61 Subpart L	Pump	0	Standard Service	UNCLASSIFIED	FALSE	Light Liquid	FALSE	24-Oct-16	21-Feb-18	23-Nov-16	VIS	PPM Consulting Technician	UNCLASSIFIED	Leak Limit of 500
COKE	R184	807	WASH OIL PUMP @ SCRUBBERS	03	Accessible	40 CFR 61 Subpart L	Pump	0	Standard Service	UNCLASSIFIED	FALSE	Light Liquid	FALSE	24-Oct-16	26-Feb-18	23-Nov-16	VIS	PPM Consulting Technician	UNCLASSIFIED	Leak Limit of 500
COKE	R184	807	WASH OIL PUMP @ SCRUBBERS	03	Accessible	40 CFR 61 Subpart L	Pump	0	Standard Service	UNCLASSIFIED	FALSE	Light Liquid	FALSE	24-Oct-16	05-Mar-18	23-Nov-16	VIS	PPM Consulting Technician	UNCLASSIFIED	Leak Limit of 500
COKE	R184	807	WASH OIL PUMP @ SCRUBBERS	03	Accessible	40 CFR 61 Subpart L	Pump	0	Standard Service	UNCLASSIFIED	FALSE	Light Liquid	FALSE	24-Oct-16	02-May-18	23-Nov-16	VIS	PPM Consulting Technician	UNCLASSIFIED	Leak Limit of 500
COKE	R184	807	WASH OIL PUMP @ SCRUBBERS	03	Accessible	40 CFR 61 Subpart L	Pump	0	Standard Service	UNCLASSIFIED	FALSE	Light Liquid	FALSE	24-Oct-16	16-May-18	23-Nov-16	VIS	PPM Consulting Technician	UNCLASSIFIED	Leak Limit of 500
COKE	R184	807	WASH OIL PUMP @ SCRUBBERS	03	Accessible	40 CFR 61 Subpart L	Pump	0	Standard Service	UNCLASSIFIED	FALSE	Light Liquid	FALSE	24-Oct-16	21-May-18	23-Nov-16	VIS	PPM Consulting Technician	UNCLASSIFIED	Leak Limit of 500
COKE	R184	807	WASH OIL PUMP @ SCRUBBERS	03	Accessible	40 CFR 61 Subpart L	Pump	0	Standard Service	UNCLASSIFIED	FALSE	Light Liquid	FALSE	24-Oct-16	30-May-18	23-Nov-16	VIS	PPM Consulting Technician	UNCLASSIFIED	Leak Limit of 500
COKE	R184	807	WASH OIL PUMP @ SCRUBBERS	03	Accessible	40 CFR 61 Subpart L	Pump	0	Standard Service	UNCLASSIFIED	FALSE	Light Liquid	FALSE	24-Oct-16	03-Jan-18	23-Nov-16	VIS	PPM Consulting Technician	UNCLASSIFIED	Leak Limit of 500
COKE	R184	807	WASH OIL PUMP @ SCRUBBERS	03	Accessible	40 CFR 61 Subpart L	Pump	0	Standard Service	UNCLASSIFIED	FALSE	Light Liquid	FALSE	24-Oct-16	09-Jan-18	23-Nov-16	VIS	PPM Consulting Technician	UNCLASSIFIED	Leak Limit of 500
COKE	R184	807	WASH OIL PUMP @ SCRUBBERS	03	Accessible	40 CFR 61 Subpart L	Pump	0	Standard Service	UNCLASSIFIED	FALSE	Light Liquid	FALSE	24-Oct-16	15-Jan-18	23-Nov-16	VIS	PPM Consulting Technician	UNCLASSIFIED	Leak Limit of 500
COKE	R184	807	WASH OIL PUMP @ SCRUBBERS	03	Accessible	40 CFR 61 Subpart L	Pump	0	Standard Service	UNCLASSIFIED	FALSE	Light Liquid	FALSE	24-Oct-16	19-Mar-18	23-Nov-16	VIS	PPM Consulting Technician	UNCLASSIFIED	Leak Limit of 500
COKE	R184	807	WASH OIL PUMP @ SCRUBBERS	03	Accessible	40 CFR 61 Subpart L	Pump	0	Standard Service	UNCLASSIFIED	FALSE	Light Liquid	FALSE	24-Oct-16	28-Mar-18	23-Nov-16	VIS	PPM Consulting Technician	UNCLASSIFIED	Leak Limit of 500
COKE	R184	807	WASH OIL PUMP @ SCRUBBERS	03	Accessible	40 CFR 61 Subpart L	Pump	0	Standard Service	UNCLASSIFIED	FALSE	Light Liquid	FALSE	24-Oct-16	04-Apr-18	23-Nov-16	VIS	PPM Consulting Technician	UNCLASSIFIED	Leak Limit of 500
COKE	R184	807	WASH OIL PUMP @ SCRUBBERS	03	Accessible	40 CFR 61 Subpart L	Pump	0	Standard Service	UNCLASSIFIED	FALSE	Light Liquid	FALSE	24-Oct-16	09-Apr-18	23-Nov-16	VIS	PPM Consulting Technician	UNCLASSIFIED	Leak Limit of 500
COKE	R184	807	WASH OIL PUMP @ SCRUBBERS	03	Accessible	40 CFR 61 Subpart L	Pump	0	Standard Service	UNCLASSIFIED	FALSE	Light Liquid	FALSE	24-Oct-16	17-Apr-18	23-Nov-16	VIS	PPM Consulting Technician	UNCLASSIFIED	Leak Limit of 500
COKE	R194	871	WASH OIL PUMP TO L.O. STILL @ EAST SCRUBBER	02	Accessible	40 CFR 61 Subpart L	Pump	0	Standard Service	UNCLASSIFIED	FALSE	Light Liquid	FALSE	24-Oct-16	03-Jan-18	23-Nov-16	VIS	PPM Consulting Technician	UNCLASSIFIED	Leak Limit of 500
COKE	R194	871	WASH OIL PUMP TO L.O. STILL @ EAST SCRUBBER	02	Accessible	40 CFR 61 Subpart L	Pump	0	Standard Service	UNCLASSIFIED	FALSE	Light Liquid	FALSE	24-Oct-16	26-Feb-18	23-Nov-16	VIS	PPM Consulting Technician	UNCLASSIFIED	Leak Limit of 500
COKE	R194	871	WASH OIL PUMP TO L.O. STILL @ EAST SCRUBBER	02	Accessible	40 CFR 61 Subpart L	Pump	0	Standard Service	UNCLASSIFIED	FALSE	Light Liquid	FALSE	24-Oct-16	05-Mar-18	23-Nov-16	VIS	PPM Consulting Technician	UNCLASSIFIED	Leak Limit of 500
COKE	R194	871	WASH OIL PUMP TO L.O. STILL @ EAST SCRUBBER	02	Accessible	40 CFR 61 Subpart L	Pump	0	Standard Service	UNCLASSIFIED	FALSE	Light Liquid	FALSE	24-Oct-16	19-Mar-18	23-Nov-16	VIS	PPM Consulting Technician	UNCLASSIFIED	Leak Limit of 500
COKE	R194	871	WASH OIL PUMP TO L.O. STILL @ EAST SCRUBBER	02	Accessible	40 CFR 61 Subpart L	Pump	0	Standard Service	UNCLASSIFIED	FALSE	Light Liquid	FALSE	24-Oct-16	28-Mar-18	23-Nov-16	VIS	PPM Consulting Technician	UNCLASSIFIED	Leak Limit of 500
COKE	R194	871	WASH OIL PUMP TO L.O. STILL @ EAST SCRUBBER	02	Accessible	40 CFR 61 Subpart L	Pump	0	Standard Service	UNCLASSIFIED	FALSE	Light Liquid	FALSE	24-Oct-16	04-Apr-18	23-Nov-16	VIS	PPM Consulting Technician	UNCLASSIFIED	Leak Limit of 500
COKE	R194	871	WASH OIL PUMP TO L.O. STILL @ EAST SCRUBBER	02	Accessible	40 CFR 61 Subpart L	Pump	0	Standard Service	UNCLASSIFIED	FALSE	Light Liquid	FALSE	24-Oct-16	30-May-18	23-Nov-16	VIS	PPM Consulting Technician	UNCLASSIFIED	Leak Limit of 500
COKE	R194	871	WASH OIL PUMP TO L.O. STILL @ EAST SCRUBBER	02	Accessible	40 CFR 61 Subpart L	Pump	0	Standard Service	UNCLASSIFIED	FALSE	Light Liquid	FALSE	24-Oct-16	09-Jan-18	23-Nov-16	VIS	PPM Consulting Technician	UNCLASSIFIED	Leak Limit of 500
COKE	R194	871	WASH OIL PUMP TO L.O. STILL @ EAST SCRUBBER	02	Accessible	40 CFR 61 Subpart L	Pump	0	Standard Service	UNCLASSIFIED	FALSE	Light Liquid	FALSE	24-Oct-16	15-Jan-18	23-Nov-16	VIS	PPM Consulting Technician	UNCLASSIFIED	Leak Limit of 500
COKE	R194	871	WASH OIL PUMP TO L.O. STILL @ EAST SCRUBBER	02	Accessible	40 CFR 61 Subpart L	Pump	0	Standard Service	UNCLASSIFIED	FALSE	Light Liquid	FALSE	24-Oct-16	29-Jan-18	23-Nov-16	VIS	PPM Consulting Technician	UNCLASSIFIED	Leak Limit of 500
COKE	R194	871	WASH OIL PUMP TO L.O. STILL @ EAST SCRUBBER	02	Accessible	40 CFR 61 Subpart L	Pump	0	Standard Service	UNCLASSIFIED	FALSE	Light Liquid	FALSE	24-Oct-16	06-Feb-18	23-Nov-16	VIS	PPM Consulting Technician	UNCLASSIFIED	Leak Limit of 500
COKE	R194	871	WASH OIL PUMP TO L.O. STILL @ EAST SCRUBBER	02	Accessible	40 CFR 61 Subpart L	Pump	0	Standard Service	UNCLASSIFIED	FALSE	Light Liquid	FALSE	24-Oct-16	21-Feb-18	23-Nov-16	VIS	PPM Consulting Technician	UNCLASSIFIED	Leak Limit of 500
COKE	R194	871	WASH OIL PUMP TO L.O. STILL @ EAST SCRUBBER	02	Accessible	40 CFR 61 Subpart L	Pump	0	Standard Service	UNCLASSIFIED	FALSE	Light Liquid	FALSE	24-Oct-16	09-Apr-18	23-Nov-16	VIS	PPM Consulting Technician	UNCLASSIFIED	Leak Limit of 500
COKE	R194	871	WASH OIL PUMP TO L.O. STILL @ EAST SCRUBBER	02	Accessible	40 CFR 61 Subpart L	Pump	0	Standard Service	UNCLASSIFIED	FALSE	Light Liquid	FALSE	24-Oct-16	17-Apr-18	23-Nov-16	VIS	PPM Consulting Technician	UNCLASSIFIED	Leak Limit of 500
COKE	R194	871	WASH OIL PUMP TO L.O. STILL @ EAST SCRUBBER	02	Accessible	40 CFR 61 Subpart L	Pump	0	Standard Service	UNCLASSIFIED	FALSE	Light Liquid	FALSE	24-Oct-16	02-May-18	23-Nov-16	VIS	PPM Consulting Technician	UNCLASSIFIED	Leak Limit of 500
COKE	R194	871	WASH OIL PUMP TO L.O. STILL @ EAST SCRUBBER	02	Accessible	40 CFR 61 Subpart L	Pump	0	Standard Service	UNCLASSIFIED	FALSE	Light Liquid	FALSE	24-Oct-16	16-May-18	23-Nov-16	VIS	PPM Consulting Technician	UNCLASSIFIED	Leak Limit of 500
COKE	R194	871	WASH OIL PUMP TO L.O. STILL @ EAST SCRUBBER	02	Accessible	40 CFR 61 Subpart L	Pump	0	Standard Service	UNCLASSIFIED	FALSE	Light Liquid	FALSE	24-Oct-16	21-May-18	23-Nov-16	VIS	PPM Consulting Technician	UNCLASSIFIED	Leak Limit of 500
COKE	R204	735	NORTH LIGHT OIL STILL PUMP	03	Accessible	40 CFR 61 Subpart L	Pump	0	Standard Service	UNCLASSIFIED	FALSE	Light Liquid	FALSE	24-Oct-16	03-Jan-18	23-Nov-16	VIS	PPM Consulting Technician	UNCLASSIFIED	Leak Limit of 500
COKE	R204	735	NORTH LIGHT OIL STILL PUMP	03	Accessible	40 CFR 61 Subpart L	Pump	0	Standard Service	UNCLASSIFIED	FALSE	Light Liquid	FALSE	24-Oct-16	09-Jan-18	23-Nov-16	VIS	PPM Consulting Technician	UNCLASSIFIED	Leak Limit of 500
COKE	R204	735	NORTH LIGHT OIL STILL PUMP	03	Accessible	40 CFR 61 Subpart L	Pump	0	Standard Service	UNCLASSIFIED	FALSE	Light Liquid	FALSE	24-Oct-16	15-Jan-18	23-Nov-16	VIS	PPM Consulting Technician	UNCLASSIFIED	Leak Limit of 500
COKE	R204	735	NORTH LIGHT OIL STILL PUMP	03	Accessible	40 CFR 61 Subpart L	Pump	0	Standard Service	UNCLASSIFIED	FALSE	Light Liquid	FALSE	24-Oct-16	29-Jan-18	23-Nov-16	VIS	PPM Consulting Technician	UNCLASSIFIED	Leak Limit of 500
COKE	R204	735	NORTH LIGHT OIL STILL PUMP	03	Accessible	40 CFR 61 Subpart L	Pump	0	Standard Service	UNCLASSIFIED	FALSE	Light Liquid	FALSE	24-Oct-16	28-Mar-18	23-Nov-16	VIS	PPM Consulting Technician	UNCLASSIFIED	Leak Limit of 500
COKE	R204	735	NORTH LIGHT OIL STILL PUMP	03	Accessible	40 CFR 61 Subpart L	Pump	0	Standard Service	UNCLASSIFIED	FALSE	Light Liquid	FALSE	24-Oct-16	04-Apr-18	23-Nov-16	VIS	PPM Consulting Technician	UNCLASSIFIED	Leak Limit of 500
COKE	R204	735	NORTH LIGHT OIL STILL PUMP	03	Accessible	40 CFR 61 Subpart L	Pump	0	Standard Service	UNCLASSIFIED	FALSE	Light Liquid	FALSE	24-Oct-16	09-Apr-18	23-Nov-16	VIS	PPM Consulting Technician	UNCLASSIFIED	Leak Limit of 500
COKE	R204	735	NORTH LIGHT OIL STILL PUMP	03	Accessible	40 CFR 61 Subpart L	Pump	0	Standard Service	UNCLASSIFIED	FALSE	Light Liquid	FALSE	24-Oct-16	17-Apr-18	23-Nov-16	VIS	PPM Consulting Technician	UNCLASSIFIED	Leak Limit of 500
COKE	R204	735	NORTH LIGHT OIL STILL PUMP	03	Accessible	40 CFR 61 Subpart L	Pump	0	Standard Service	UNCLASSIFIED	FALSE	Light Liquid	FALSE	24-Oct-16	02-May-18	23-Nov-16	VIS	PPM Consulting Technician	UNCLASSIFIED	Leak Limit of 500
COKE	R204	735	NORTH LIGHT OIL STILL PUMP	03	Accessible	40 CFR 61 Subpart L	Pump	0	Standard Service	UNCLASSIFIED	FALSE	Light Liquid	FALSE	24-Oct-16	06-Feb-18	23-Nov-16	VIS	PPM Consulting Technician	UNCLASSIFIED	Leak Limit of 500
COKE	R204	735	NORTH LIGHT OIL STILL PUMP	03	Accessible	40 CFR 61 Subpart L	Pump	0	Standard Service	UNCLASSIFIED	FALSE	Light Liquid	FALSE	24-Oct-16	21-Feb-18	23-Nov-16	VIS	PPM Consulting Technician	UNCLASSIFIED	Leak Limit of 500
COKE	R204	735	NORTH LIGHT OIL STILL PUMP	03	Accessible	40 CFR 61 Subpart L	Pump	0	Standard Service	UNCLASSIFIED	FALSE	Light Liquid	FALSE	24-Oct-16	26-Feb-18	23-Nov-16	VIS	PPM Consulting Technician	UNCLASSIFIED	Leak Limit of 500
COKE	R204	735	NORTH LIGHT OIL STILL PUMP	03	Accessible	40 CFR 61 Subpart L	Pump	0	Standard Service	UNCLASSIFIED	FALSE	Light Liquid	FALSE	24-Oct-16	05-Mar-18	23-Nov-16	VIS	PPM Consulting Technician	UNCLASSIFIED	Leak Limit of 500
COKE	R204	735	NORTH LIGHT OIL STILL PUMP	03	Accessible	40 CFR 61 Subpart L	Pump	0	Standard Service	UNCLASSIFIED	FALSE	Light Liquid	FALSE	24-Oct-16	19-Mar-18	23-Nov-16	VIS	PPM Consulting Technician	UNCLASSIFIED	Leak Limit of 500

UNIT_CODE	TAG_ NUMBER	ROUTE	LOCATION	LEVEL	ACCESS_DESC	GROUP_DESC	EQUITYPE DESC	SIZE	CONFIG_DESC	PRODUCT_DESC	CLOSED_ VENT_SYSTEM	SERVICE_DESC	UNDER_300_ HOURS_SERVICE	DATE_ADDED	DATE_INSPECTED	DATE_IN_SERVICE	INSPTYPE _CODE	TECH_DESC	INSTRUM_DESC	LEAKLIM_DESC
COKE	R204	735	NORTH LIGHT OIL STILL PUMP	03	Accessible	40 CFR 61 Subpart L	Pump	0	Standard Service	UNCLASSIFIED	FALSE	Light Liquid	FALSE	24-Oct-16	16-May-18	23-Nov-16	VIS	PPM Consulting Technician	UNCLASSIFIED	Leak Limit of 500
COKE	R204	735	NORTH LIGHT OIL STILL PUMP	03	Accessible	40 CFR 61 Subpart L	Pump	0	Standard Service	UNCLASSIFIED	FALSE	Light Liquid	FALSE	24-Oct-16	21-May-18	23-Nov-16	VIS	PPM Consulting Technician	UNCLASSIFIED	Leak Limit of 500
COKE	R204	735	NORTH LIGHT OIL STILL PUMP	03	Accessible	40 CFR 61 Subpart L	Pump	0	Standard Service	UNCLASSIFIED	FALSE	Light Liquid	FALSE	24-Oct-16	30-May-18	23-Nov-16	VIS	PPM Consulting Technician	UNCLASSIFIED	Leak Limit of 500
COKE	R206	734	SOUTH LIGHT OIL STILL PUMP	03	Accessible	40 CFR 61 Subpart L	Pump	0	Standard Service	UNCLASSIFIED	FALSE	Light Liquid	FALSE	24-Oct-16	03-Jan-18	23-Nov-16	VIS	PPM Consulting Technician	UNCLASSIFIED	Leak Limit of 500
COKE	R206	734	SOUTH LIGHT OIL STILL PUMP	03	Accessible	40 CFR 61 Subpart L	Pump	0	Standard Service	UNCLASSIFIED	FALSE	Light Liquid	FALSE	24-Oct-16	09-Jan-18	23-Nov-16	VIS	PPM Consulting Technician	UNCLASSIFIED	Leak Limit of 500
COKE	R206	734	SOUTH LIGHT OIL STILL PUMP	03	Accessible	40 CFR 61 Subpart L	Pump	0	Standard Service	UNCLASSIFIED	FALSE	Light Liquid	FALSE	24-Oct-16	15-Jan-18	23-Nov-16	VIS	PPM Consulting Technician	UNCLASSIFIED	Leak Limit of 500
COKE	R206	734	SOUTH LIGHT OIL STILL PUMP	03	Accessible	40 CFR 61 Subpart L	Pump	0	Standard Service	UNCLASSIFIED	FALSE	Light Liquid	FALSE	24-Oct-16	29-Jan-18	23-Nov-16	VIS	PPM Consulting Technician	UNCLASSIFIED	Leak Limit of 500
COKE	R206	734	SOUTH LIGHT OIL STILL PUMP	03	Accessible	40 CFR 61 Subpart L	Pump	0	Standard Service	UNCLASSIFIED	FALSE	Light Liquid	FALSE	24-Oct-16	06-Feb-18	23-Nov-16	VIS	PPM Consulting Technician	UNCLASSIFIED	Leak Limit of 500
COKE	R206	734	SOUTH LIGHT OIL STILL PUMP	03	Accessible	40 CFR 61 Subpart L	Pump	0	Standard Service	UNCLASSIFIED	FALSE	Light Liquid	FALSE	24-Oct-16	21-Feb-18	23-Nov-16	VIS	PPM Consulting Technician	UNCLASSIFIED	Leak Limit of 500
COKE	R206	734	SOUTH LIGHT OIL STILL PUMP	03	Accessible	40 CFR 61 Subpart L	Pump	0	Standard Service	UNCLASSIFIED	FALSE	Light Liquid	FALSE	24-Oct-16	26-Feb-18	23-Nov-16	VIS	PPM Consulting Technician	UNCLASSIFIED	Leak Limit of 500
COKE	R206	734	SOUTH LIGHT OIL STILL PUMP	03	Accessible	40 CFR 61 Subpart L	Pump	0	Standard Service	UNCLASSIFIED	FALSE	Light Liquid	FALSE	24-Oct-16	17-Apr-18	23-Nov-16	VIS	PPM Consulting Technician	UNCLASSIFIED	Leak Limit of 500
COKE	R206	734	SOUTH LIGHT OIL STILL PUMP	03	Accessible	40 CFR 61 Subpart L	Pump	0	Standard Service	UNCLASSIFIED	FALSE	Light Liquid	FALSE	24-Oct-16	02-May-18	23-Nov-16	VIS	PPM Consulting Technician	UNCLASSIFIED	Leak Limit of 500
COKE	R206	734	SOUTH LIGHT OIL STILL PUMP	03	Accessible	40 CFR 61 Subpart L	Pump	0	Standard Service	UNCLASSIFIED	FALSE	Light Liquid	FALSE	24-Oct-16	16-May-18	23-Nov-16	VIS	PPM Consulting Technician	UNCLASSIFIED	Leak Limit of 500
COKE	R206	734	SOUTH LIGHT OIL STILL PUMP	03	Accessible	40 CFR 61 Subpart L	Pump	0	Standard Service	UNCLASSIFIED	FALSE	Light Liquid	FALSE	24-Oct-16	21-May-18	23-Nov-16	VIS	PPM Consulting Technician	UNCLASSIFIED	Leak Limit of 500
COKE	R206	734	SOUTH LIGHT OIL STILL PUMP	03	Accessible	40 CFR 61 Subpart L	Pump	0	Standard Service	UNCLASSIFIED	FALSE	Light Liquid	FALSE	24-Oct-16	30-May-18	23-Nov-16	VIS	PPM Consulting Technician	UNCLASSIFIED	Leak Limit of 500
COKE	R206	734	SOUTH LIGHT OIL STILL PUMP	03	Accessible	40 CFR 61 Subpart L	Pump	0	Standard Service	UNCLASSIFIED	FALSE	Light Liquid	FALSE	24-Oct-16	05-Mar-18	23-Nov-16	VIS	PPM Consulting Technician	UNCLASSIFIED	Leak Limit of 500
COKE	R206	734	SOUTH LIGHT OIL STILL PUMP	03	Accessible	40 CFR 61 Subpart L	Pump	0	Standard Service	UNCLASSIFIED	FALSE	Light Liquid	FALSE	24-Oct-16	19-Mar-18	23-Nov-16	VIS	PPM Consulting Technician	UNCLASSIFIED	Leak Limit of 500
COKE	R206	734	SOUTH LIGHT OIL STILL PUMP	03	Accessible	40 CFR 61 Subpart L	Pump	0	Standard Service	UNCLASSIFIED	FALSE	Light Liquid	FALSE	24-Oct-16	28-Mar-18	23-Nov-16	VIS	PPM Consulting Technician	UNCLASSIFIED	Leak Limit of 500
COKE	R206	734	SOUTH LIGHT OIL STILL PUMP	03	Accessible	40 CFR 61 Subpart L	Pump	0	Standard Service	UNCLASSIFIED	FALSE	Light Liquid	FALSE	24-Oct-16	04-Apr-18	23-Nov-16	VIS	PPM Consulting Technician	UNCLASSIFIED	Leak Limit of 500
COKE	R206	734	SOUTH LIGHT OIL STILL PUMP	03	Accessible	40 CFR 61 Subpart L	Pump	0	Standard Service	UNCLASSIFIED	FALSE	Light Liquid	FALSE	24-Oct-16	09-Apr-18	23-Nov-16	VIS	PPM Consulting Technician	UNCLASSIFIED	Leak Limit of 500
COKE	R213	739	DIRTY WATER TRANSFER BASIN PUMP	01	Accessible	40 CFR 61 Subpart L	Pump	0	Standard Service	UNCLASSIFIED	FALSE	Light Liquid	FALSE	24-Oct-16	21-Feb-18	23-Nov-16	VIS	PPM Consulting Technician	UNCLASSIFIED	Leak Limit of 500
COKE	R213	739	DIRTY WATER TRANSFER BASIN PUMP	01	Accessible	40 CFR 61 Subpart L	Pump	0	Standard Service	UNCLASSIFIED	FALSE	Light Liquid	FALSE	24-Oct-16	26-Feb-18	23-Nov-16	VIS	PPM Consulting Technician	UNCLASSIFIED	Leak Limit of 500
COKE	R213	739	DIRTY WATER TRANSFER BASIN PUMP	01	Accessible	40 CFR 61 Subpart L	Pump	0	Standard Service	UNCLASSIFIED	FALSE	Light Liquid	FALSE	24-Oct-16	05-Mar-18	23-Nov-16	VIS	PPM Consulting Technician	UNCLASSIFIED	Leak Limit of 500
COKE	R213	739	DIRTY WATER TRANSFER BASIN PUMP	01	Accessible	40 CFR 61 Subpart L	Pump	0	Standard Service	UNCLASSIFIED	FALSE	Light Liquid	FALSE	24-Oct-16	19-Mar-18	23-Nov-16	VIS	PPM Consulting Technician	UNCLASSIFIED	Leak Limit of 500
COKE	R213	739	DIRTY WATER TRANSFER BASIN PUMP	01	Accessible	40 CFR 61 Subpart L	Pump	0	Standard Service	UNCLASSIFIED	FALSE	Light Liquid	FALSE	24-Oct-16	28-Mar-18	23-Nov-16	VIS	PPM Consulting Technician	UNCLASSIFIED	Leak Limit of 500
COKE	R213	739	DIRTY WATER TRANSFER BASIN PUMP	01	Accessible	40 CFR 61 Subpart L	Pump	0	Standard Service	UNCLASSIFIED	FALSE	Light Liquid	FALSE	24-Oct-16	21-May-18	23-Nov-16	VIS	PPM Consulting Technician	UNCLASSIFIED	Leak Limit of 500
COKE	R213	739	DIRTY WATER TRANSFER BASIN PUMP	01	Accessible	40 CFR 61 Subpart L	Pump	0	Standard Service	UNCLASSIFIED	FALSE	Light Liquid	FALSE	24-Oct-16	30-May-18	23-Nov-16	VIS	PPM Consulting Technician	UNCLASSIFIED	Leak Limit of 500
COKE	R213	739	DIRTY WATER TRANSFER BASIN PUMP	01	Accessible	40 CFR 61 Subpart L	Pump	0	Standard Service	UNCLASSIFIED	FALSE	Light Liquid	FALSE	24-Oct-16	03-Jan-18	23-Nov-16	VIS	PPM Consulting Technician	UNCLASSIFIED	Leak Limit of 500
COKE	R213	739	DIRTY WATER TRANSFER BASIN PUMP	01	Accessible	40 CFR 61 Subpart L	Pump	0	Standard Service	UNCLASSIFIED	FALSE	Light Liquid	FALSE	24-Oct-16	09-Jan-18	23-Nov-16	VIS	PPM Consulting Technician	UNCLASSIFIED	Leak Limit of 500
COKE	R213	739	DIRTY WATER TRANSFER BASIN PUMP	01	Accessible	40 CFR 61 Subpart L	Pump	0	Standard Service	UNCLASSIFIED	FALSE	Light Liquid	FALSE	24-Oct-16	15-Jan-18	23-Nov-16	VIS	PPM Consulting Technician	UNCLASSIFIED	Leak Limit of 500
COKE	R213	739	DIRTY WATER TRANSFER BASIN PUMP	01	Accessible	40 CFR 61 Subpart L	Pump	0	Standard Service	UNCLASSIFIED	FALSE	Light Liquid	FALSE	24-Oct-16	29-Jan-18	23-Nov-16	VIS	PPM Consulting Technician	UNCLASSIFIED	Leak Limit of 500
COKE	R213	739	DIRTY WATER TRANSFER BASIN PUMP	01	Accessible	40 CFR 61 Subpart L	Pump	0	Standard Service	UNCLASSIFIED	FALSE	Light Liquid	FALSE	24-Oct-16	06-Feb-18	23-Nov-16	VIS	PPM Consulting Technician	UNCLASSIFIED	Leak Limit of 500
COKE	R213	739	DIRTY WATER TRANSFER BASIN PUMP	01	Accessible	40 CFR 61 Subpart L	Pump	0	Standard Service	UNCLASSIFIED	FALSE	Light Liquid	FALSE	24-Oct-16	04-Apr-18	23-Nov-16	VIS	PPM Consulting Technician	UNCLASSIFIED	Leak Limit of 500
COKE	R213	739	DIRTY WATER TRANSFER BASIN PUMP	01	Accessible	40 CFR 61 Subpart L	Pump	0	Standard Service	UNCLASSIFIED	FALSE	Light Liquid	FALSE	24-Oct-16	09-Apr-18	23-Nov-16	VIS	PPM Consulting Technician	UNCLASSIFIED	Leak Limit of 500
COKE	R213	739	DIRTY WATER TRANSFER BASIN PUMP	01	Accessible	40 CFR 61 Subpart L	Pump	0	Standard Service	UNCLASSIFIED	FALSE	Light Liquid	FALSE	24-Oct-16	17-Apr-18	23-Nov-16	VIS	PPM Consulting Technician	UNCLASSIFIED	Leak Limit of 500
COKE	R213	739	DIRTY WATER TRANSFER BASIN PUMP	01	Accessible	40 CFR 61 Subpart L	Pump	0	Standard Service	UNCLASSIFIED	FALSE	Light Liquid	FALSE	24-Oct-16	02-May-18	23-Nov-16	VIS	PPM Consulting Technician	UNCLASSIFIED	Leak Limit of 500
COKE	R213	739	DIRTY WATER TRANSFER BASIN PUMP	01	Accessible	40 CFR 61 Subpart L	Pump	0	Standard Service	UNCLASSIFIED	FALSE	Light Liquid	FALSE	24-Oct-16	16-May-18	23-Nov-16	VIS	PPM Consulting Technician	UNCLASSIFIED	Leak Limit of 500
COKE	R214	740	PORTABLE DITCH PUMP @ PURIFIER	01	Accessible	40 CFR 61 Subpart L	Pump	0	Standard Service	UNCLASSIFIED	FALSE	Light Liquid	FALSE	24-Oct-16	03-Jan-18	23-Nov-16	VIS	PPM Consulting Technician	UNCLASSIFIED	Leak Limit of 500
COKE	R214	740	PORTABLE DITCH PUMP @ PURIFIER	01	Accessible	40 CFR 61 Subpart L	Pump	0	Standard Service	UNCLASSIFIED	FALSE	Light Liquid	FALSE	24-Oct-16	09-Jan-18	23-Nov-16	VIS	PPM Consulting Technician	UNCLASSIFIED	Leak Limit of 500
COKE	R214	740	PORTABLE DITCH PUMP @ PURIFIER	01	Accessible	40 CFR 61 Subpart L	Pump	0	Standard Service	UNCLASSIFIED	FALSE	Light Liquid	FALSE	24-Oct-16	15-Jan-18	23-Nov-16	VIS	PPM Consulting Technician	UNCLASSIFIED	Leak Limit of 500
COKE	R214	740	PORTABLE DITCH PUMP @ PURIFIER	01	Accessible	40 CFR 61 Subpart L	Pump	0	Standard Service	UNCLASSIFIED	FALSE	Light Liquid	FALSE	24-Oct-16	19-Mar-18	23-Nov-16	VIS	PPM Consulting Technician	UNCLASSIFIED	Leak Limit of 500
COKE	R214	740	PORTABLE DITCH PUMP @ PURIFIER	01	Accessible	40 CFR 61 Subpart L	Pump	0	Standard Service	UNCLASSIFIED	FALSE	Light Liquid	FALSE	24-Oct-16	28-Mar-18	23-Nov-16	VIS	PPM Consulting Technician	UNCLASSIFIED	Leak Limit of 500
COKE	R214	740	PORTABLE DITCH PUMP @ PURIFIER	01	Accessible	40 CFR 61 Subpart L	Pump	0	Standard Service	UNCLASSIFIED	FALSE	Light Liquid	FALSE	24-Oct-16	04-Apr-18	23-Nov-16	VIS	PPM Consulting Technician	UNCLASSIFIED	Leak Limit of 500
COKE	R214	740	PORTABLE DITCH PUMP @ PURIFIER	01	Accessible	40 CFR 61 Subpart L	Pump	0	Standard Service	UNCLASSIFIED	FALSE	Light Liquid	FALSE	24-Oct-16	09-Apr-18	23-Nov-16	VIS	PPM Consulting Technician	UNCLASSIFIED	Leak Limit of 500
COKE	R214	740	PORTABLE DITCH PUMP @ PURIFIER	01	Accessible	40 CFR 61 Subpart L	Pump	0	Standard Service	UNCLASSIFIED	FALSE	Light Liquid	FALSE	24-Oct-16	17-Apr-18	23-Nov-16	VIS	PPM Consulting Technician	UNCLASSIFIED	Leak Limit of 500
COKE	R214	740	PORTABLE DITCH PUMP @ PURIFIER	01	Accessible	40 CFR 61 Subpart L	Pump	0	Standard Service	UNCLASSIFIED	FALSE	Light Liquid	FALSE	24-Oct-16	29-Jan-18	23-Nov-16	VIS	PPM Consulting Technician	UNCLASSIFIED	Leak Limit of 500
COKE	R214	740	PORTABLE DITCH PUMP @ PURIFIER	01	Accessible	40 CFR 61 Subpart L	Pump	0	Standard Service	UNCLASSIFIED	FALSE	Light Liquid	FALSE	24-Oct-16	06-Feb-18	23-Nov-16	VIS	PPM Consulting Technician	UNCLASSIFIED	Leak Limit of 500
COKE	R214	740	PORTABLE DITCH PUMP @ PURIFIER	01	Accessible	40 CFR 61 Subpart L	Pump	0	Standard Service	UNCLASSIFIED	FALSE	Light Liquid	FALSE	24-Oct-16	21-Feb-18	23-Nov-16	VIS	PPM Consulting Technician	UNCLASSIFIED	Leak Limit of 500
COKE	R214	740	PORTABLE DITCH PUMP @ PURIFIER	01	Accessible	40 CFR 61 Subpart L	Pump	0	Standard Service	UNCLASSIFIED	FALSE	Light Liquid	FALSE	24-Oct-16	26-Feb-18	23-Nov-16	VIS	PPM Consulting Technician	UNCLASSIFIED	Leak Limit of 500
COKE	R214	740	PORTABLE DITCH PUMP @ PURIFIER	01	Accessible	40 CFR 61 Subpart L	Pump	0	Standard Service	UNCLASSIFIED	FALSE	Light Liquid	FALSE	24-Oct-16	05-Mar-18	23-Nov-16	VIS	PPM Consulting Technician	UNCLASSIFIED	Leak Limit of 500
COKE	R214	740	PORTABLE DITCH PUMP @ PURIFIER	01	Accessible	40 CFR 61 Subpart L	Pump	0	Standard Service	UNCLASSIFIED	FALSE	Light Liquid	FALSE	24-Oct-16	02-May-18	23-Nov-16	VIS	PPM Consulting Technician	UNCLASSIFIED	Leak Limit of 500
COKE	R214	740	PORTABLE DITCH PUMP @ PURIFIER	01	Accessible	40 CFR 61 Subpart L	Pump	0	Standard Service	UNCLASSIFIED	FALSE	Light Liquid	FALSE	24-Oct-16	16-May-18	23-Nov-16	VIS	PPM Consulting Technician	UNCLASSIFIED	Leak Limit of 500
COKE	R214	740	PORTABLE DITCH PUMP @ PURIFIER	01	Accessible	40 CFR 61 Subpart L	Pump	0	Standard Service	UNCLASSIFIED	FALSE	Light Liquid	FALSE	24-Oct-16	21-May-18	23-Nov-16	VIS	PPM Consulting Technician	UNCLASSIFIED	Leak Limit of 500
COKE	R214	740	PORTABLE DITCH PUMP @ PURIFIER	01	Accessible	40 CFR 61 Subpart L	Pump	0	Standard Service	UNCLASSIFIED	FALSE	Light Liquid	FALSE	24-Oct-16	30-May-18	23-Nov-16	VIS	PPM Consulting Technician	UNCLASSIFIED	Leak Limit of 500
COKE	R215	841	PORTABLE DITCH PUMP @ SCRUBBERS	01	Accessible	40 CFR 61 Subpart L	Pump	0	Standard Service	UNCLASSIFIED	FALSE	Light Liquid	FALSE	24-Oct-16	09-Jan-18	23-Nov-16	VIS	PPM Consulting Technician	UNCLASSIFIED	Leak Limit of 500
COKE	R215	841	PORTABLE DITCH PUMP @ SCRUBBERS	01	Accessible	40 CFR 61 Subpart L	Pump	0	Standard Service	UNCLASSIFIED	FALSE	Light Liquid	FALSE	24-Oct-16	15-Jan-18	23-Nov-16	VIS	PPM Consulting Technician	UNCLASSIFIED	Leak Limit of 500
COKE	R215	841	PORTABLE DITCH PUMP @ SCRUBBERS	01	Accessible	40 CFR 61 Subpart L	Pump	0	Standard Service	UNCLASSIFIED	FALSE	Light Liquid	FALSE	24-Oct-16	29-Jan-18	23-Nov-16	VIS	PPM Consulting Technician	UNCLASSIFIED	Leak Limit of 500
COKE	R215	841	PORTABLE DITCH PUMP @ SCRUBBERS	01	Accessible	40 CFR 61 Subpart L	Pump	0	Standard Service	UNCLASSIFIED	FALSE	Light Liquid	FALSE	24-Oct-16	06-Feb-18	23-Nov-16	VIS	PPM Consulting Technician	UNCLASSIFIED	Leak Limit of 500
COKE	R215	841	PORTABLE DITCH PUMP @ SCRUBBERS	01	Accessible	40 CFR 61 Subpart L	Pump	0	Standard Service	UNCLASSIFIED	FALSE	Light Liquid	FALSE	24-Oct-16	21-Feb-18	23-Nov-16	VIS	PPM Consulting Technician	UNCLASSIFIED	Leak Limit of 500
COKE	R215	841	PORTABLE DITCH PUMP @ SCRUBBERS	01	Accessible	40 CFR 61 Subpart L	Pump	0	Standard Service	UNCLASSIFIED	FALSE	Light Liquid	FALSE	24-Oct-16	09-Apr-18	23-Nov-16	VIS	PPM Consulting Technician	UNCLASSIFIED	Leak Limit of 500
COKE	R215	841	PORTABLE DITCH PUMP @ SCRUBBERS	01	Accessible	40 CFR 61 Subpart L	Pump	0	Standard Service	UNCLASSIFIED	FALSE	Light Liquid	FALSE	24-Oct-16	17-Apr-18	23-Nov-16	VIS	PPM Consulting Technician	UNCLASSIFIED	Leak Limit of 500
COKE	R215	841	PORTABLE DITCH PUMP @ SCRUBBERS	01	Accessible	40 CFR 61 Subpart L	Pump	0	Standard Service	UNCLASSIFIED	FALSE	Light Liquid	FALSE	24-Oct-16	02-May-18	23-Nov-16	VIS	PPM Consulting Technician	UNCLASSIFIED	Leak Limit of 500
COKE	R215	841	PORTABLE DITCH PUMP @ SCRUBBERS	01	Accessible	40 CFR 61 Subpart L	Pump	0	Standard Service	UNCLASSIFIED	FALSE	Light Liquid	FALSE	24-Oct-16	16-May-18	23-Nov-16	VIS	PPM Consulting Technician	UNCLASSIFIED	Leak Limit of 500
COKE	R215	841	PORTABLE DITCH PUMP @ SCRUBBERS	01	Accessible	40 CFR 61 Subpart L	Pump	0	Standard Service	UNCLASSIFIED	FALSE	Light Liquid	FALSE	24-Oct-16	21-May-18	23-Nov-16	VIS	PPM Consulting Technician	UNCLASSIFIED	Leak Limit of 500
COKE	R215	841	PORTABLE DITCH PUMP @ SCRUBBERS	01	Accessible	40 CFR 61 Subpart L	Pump	0	Standard Service	UNCLASSIFIED	FALSE	Light Liquid	FALSE	24-Oct-16	03-Jan-18	23-Nov-16	VIS	PPM Consulting Technician	UNCLASSIFIED	Leak Limit of 500
COKE	R215	841	PORTABLE DITCH PUMP @ SCRUBBERS	01	Accessible	40 CFR 61 Subpart L	Pump	0	Standard Service	UNCLASSIFIED	FALSE	Light Liquid	FALSE	24-Oct-16	26-Feb-18	23-Nov-16	VIS	PPM Consulting Technician	UNCLASSIFIED	Leak Limit of 500
COKE	R215	841	PORTABLE DITCH PUMP @ SCRUBBERS	01	Accessible	40 CFR 61 Subpart L	Pump	0	Standard Service	UNCLASSIFIED	FALSE	Light Liquid	FALSE	24-Oct-16	05-Mar-18	23-Nov-16	VIS	PPM Consulting Technician	UNCLASSIFIED	Leak Limit of 500
COKE	R215	841	PORTABLE DITCH PUMP @ SCRUBBERS	01	Accessible	40 CFR 61 Subpart L	Pump	0	Standard Service	UNCLASSIFIED	FALSE	Light Liquid	FALSE	24-Oct-16	19-Mar-18	23-Nov-16	VIS	PPM Consulting Technician	UNCLASSIFIED	Leak Limit of 500
COKE	R215	841	PORTABLE DITCH PUMP @ SCRUBBERS	01	Accessible	40 CFR 61 Subpart L	Pump	0	Standard Service	UNCLASSIFIED	FALSE	Light Liquid	FALSE	24-Oct-16	28-Mar-18	23-Nov-16	VIS	PPM Consulting Technician	UNCLASSIFIED	Leak Limit of 500
COKE	R215	841	PORTABLE DITCH PUMP @ SCRUBBERS	01	Accessible	40 CFR 61 Subpart L	Pump	0	Standard Service	UNCLASSIFIED	FALSE	Light Liquid	FALSE	24-Oct-16	04-Apr-18	23-Nov-16	VIS	PPM Consulting Technician	UNCLASSIFIED	Leak Limit of 500
COKE	R215	841	PORTABLE DITCH PUMP @ SCRUBBERS	01	Accessible	40 CFR 61 Subpart L	Pump	0	Standard Service	UNCLASSIFIED	FALSE	Light Liquid	FALSE	24-Oct-16	30-May-18	23-Nov-16	VIS	PPM Consulting Technician	UNCLASSIFIED	Leak Limit of 500
COKE	R217	955	PRIMARY COOLER CIRCULATION PUMP (ELECTRIC)	02	Accessible	40 CFR 61 Subpart L	Pump	0	Standard Service	UNCLASSIFIED	FALSE	Light Liquid	FALSE	24-Oct-16	06-Feb-18	23-Nov-16	VIS	PPM Consulting Technician	UNCLASSIFIED	Leak Limit of 500
COKE	R217	955	PRIMARY COOLER CIRCULATION PUMP (ELECTRIC)	02	Accessible	40 CFR 61 Subpart L	Pump	0	Standard Service	UNCLASSIFIED	FALSE	Light Liquid	FALSE	24-Oct-16	21-Feb-18	23-Nov-16	VIS	PPM Consulting Technician	UNCLASSIFIED	Leak Limit of 500
COKE	R217	955	PRIMARY COOLER CIRCULATION PUMP (ELECTRIC)	02	Accessible	40 CFR 61 Subpart L	Pump	0	Standard Service	UNCLASSIFIED	FALSE	Light Liquid	FALSE	24-Oct-16	26-Feb-18	23-Nov-16	VIS	PPM Consulting Technician	UNCLASSIFIED	Leak Limit of 500
COKE	R217	955	PRIMARY COOLER CIRCULATION PUMP (ELECTRIC)	02	Accessible	40 CFR 61 Subpart L	Pump	0	Standard Service	UNCLASSIFIED	FALSE	Light Liquid	FALSE	24-Oct-16	05-Mar-18	23-Nov-16	VIS	PPM Consulting Technician	UNCLASSIFIED	Leak Limit of 500

UNIT_CODE	TAG_ NUMBER	ROUTE	LOCATION	LEVEL	ACCESS_DESC	GROUP_DESC	EQUITYPE DESC	SIZE	CONFIG_DESC	PRODUCT_DESC	CLOSED_ VENT_SYSTEM	SERVICE_DESC	UNDER_300_ HOURS_SERVICE	DATE_ADDED	DATE_INSPECTED	DATE_IN_SERVICE	INSPTYPE _CODE	TECH_DESC	INSTRUM_DESC	LEAKLIM_DESC
COKE	R217	955	PRIMARY COOLER CIRCULATION PUMP (ELECTRIC)	02	Accessible	40 CFR 61 Subpart L	Pump	0	Standard Service	UNCLASSIFIED	FALSE	Light Liquid	FALSE	24-Oct-16	19-Mar-18	23-Nov-16	VIS	PPM Consulting Technician	UNCLASSIFIED	Leak Limit of 500
COKE	R217	955	PRIMARY COOLER CIRCULATION PUMP (ELECTRIC)	02	Accessible	40 CFR 61 Subpart L	Pump	0	Standard Service	UNCLASSIFIED	FALSE	Light Liquid	FALSE	24-Oct-16	03-Jan-18	23-Nov-16	VIS	PPM Consulting Technician	UNCLASSIFIED	Leak Limit of 500
COKE	R217	955	PRIMARY COOLER CIRCULATION PUMP (ELECTRIC)	02	Accessible	40 CFR 61 Subpart L	Pump	0	Standard Service	UNCLASSIFIED	FALSE	Light Liquid	FALSE	24-Oct-16	09-Jan-18	23-Nov-16	VIS	PPM Consulting Technician	UNCLASSIFIED	Leak Limit of 500
COKE	R217	955	PRIMARY COOLER CIRCULATION PUMP (ELECTRIC)	02	Accessible	40 CFR 61 Subpart L	Pump	0	Standard Service	UNCLASSIFIED	FALSE	Light Liquid	FALSE	24-Oct-16	15-Jan-18	23-Nov-16	VIS	PPM Consulting Technician	UNCLASSIFIED	Leak Limit of 500
COKE	R217	955	PRIMARY COOLER CIRCULATION PUMP (ELECTRIC)	02	Accessible	40 CFR 61 Subpart L	Pump	0	Standard Service	UNCLASSIFIED	FALSE	Light Liquid	FALSE	24-Oct-16	29-Jan-18	23-Nov-16	VIS	PPM Consulting Technician	UNCLASSIFIED	Leak Limit of 500
COKE	R217	955	PRIMARY COOLER CIRCULATION PUMP (ELECTRIC)	02	Accessible	40 CFR 61 Subpart L	Pump	0	Standard Service	UNCLASSIFIED	FALSE	Light Liquid	FALSE	24-Oct-16	28-Mar-18	23-Nov-16	VIS	PPM Consulting Technician	UNCLASSIFIED	Leak Limit of 500
COKE	R217	955	PRIMARY COOLER CIRCULATION PUMP (ELECTRIC)	02	Accessible	40 CFR 61 Subpart L	Pump	0	Standard Service	UNCLASSIFIED	FALSE	Light Liquid	FALSE	24-Oct-16	04-Apr-18	23-Nov-16	VIS	PPM Consulting Technician	UNCLASSIFIED	Leak Limit of 500
COKE	R217	955	PRIMARY COOLER CIRCULATION PUMP (ELECTRIC)	02	Accessible	40 CFR 61 Subpart L	Pump	0	Standard Service	UNCLASSIFIED	FALSE	Light Liquid	FALSE	24-Oct-16	09-Apr-18	23-Nov-16	VIS	PPM Consulting Technician	UNCLASSIFIED	Leak Limit of 500
COKE	R217	955	PRIMARY COOLER CIRCULATION PUMP (ELECTRIC)	02	Accessible	40 CFR 61 Subpart L	Pump	0	Standard Service	UNCLASSIFIED	FALSE	Light Liquid	FALSE	24-Oct-16	17-Apr-18	23-Nov-16	VIS	PPM Consulting Technician	UNCLASSIFIED	Leak Limit of 500
COKE	R217	955	PRIMARY COOLER CIRCULATION PUMP (ELECTRIC)	02	Accessible	40 CFR 61 Subpart L	Pump	0	Standard Service	UNCLASSIFIED	FALSE	Light Liquid	FALSE	24-Oct-16	02-May-18	23-Nov-16	VIS	PPM Consulting Technician	UNCLASSIFIED	Leak Limit of 500
COKE	R217	955	PRIMARY COOLER CIRCULATION PUMP (ELECTRIC)	02	Accessible	40 CFR 61 Subpart L	Pump	0	Standard Service	UNCLASSIFIED	FALSE	Light Liquid	FALSE	24-Oct-16	16-May-18	23-Nov-16	VIS	PPM Consulting Technician	UNCLASSIFIED	Leak Limit of 500
COKE	R217	955	PRIMARY COOLER CIRCULATION PUMP (ELECTRIC)	02	Accessible	40 CFR 61 Subpart L	Pump	0	Standard Service	UNCLASSIFIED	FALSE	Light Liquid	FALSE	24-Oct-16	21-May-18	23-Nov-16	VIS	PPM Consulting Technician	UNCLASSIFIED	Leak Limit of 500
COKE	R217	955	PRIMARY COOLER CIRCULATION PUMP (ELECTRIC)	02	Accessible	40 CFR 61 Subpart L	Pump	0	Standard Service	UNCLASSIFIED	FALSE	Light Liquid	FALSE	24-Oct-16	30-May-18	23-Nov-16	VIS	PPM Consulting Technician	UNCLASSIFIED	Leak Limit of 500
COKE	R218	954	PRIMARY COOLER RE-SPRAY PUMP (NORTH)	02	Accessible	40 CFR 61 Subpart L	Pump	0	Standard Service	UNCLASSIFIED	FALSE	Light Liquid	FALSE	24-Oct-16	03-Jan-18	23-Nov-16	VIS	PPM Consulting Technician	UNCLASSIFIED	Leak Limit of 500
COKE	R218	954	PRIMARY COOLER RE-SPRAY PUMP (NORTH)	02	Accessible	40 CFR 61 Subpart L	Pump	0	Standard Service	UNCLASSIFIED	FALSE	Light Liquid	FALSE	24-Oct-16	09-Jan-18	23-Nov-16	VIS	PPM Consulting Technician	UNCLASSIFIED	Leak Limit of 500
COKE	R218	954	PRIMARY COOLER RE-SPRAY PUMP (NORTH)	02	Accessible	40 CFR 61 Subpart L	Pump	0	Standard Service	UNCLASSIFIED	FALSE	Light Liquid	FALSE	24-Oct-16	05-Mar-18	23-Nov-16	VIS	PPM Consulting Technician	UNCLASSIFIED	Leak Limit of 500
COKE	R218	954	PRIMARY COOLER RE-SPRAY PUMP (NORTH)	02	Accessible	40 CFR 61 Subpart L	Pump	0	Standard Service	UNCLASSIFIED	FALSE	Light Liquid	FALSE	24-Oct-16	19-Mar-18	23-Nov-16	VIS	PPM Consulting Technician	UNCLASSIFIED	Leak Limit of 500
COKE	R218	954	PRIMARY COOLER RE-SPRAY PUMP (NORTH)	02	Accessible	40 CFR 61 Subpart L	Pump	0	Standard Service	UNCLASSIFIED	FALSE	Light Liquid	FALSE	24-Oct-16	28-Mar-18	23-Nov-16	VIS	PPM Consulting Technician	UNCLASSIFIED	Leak Limit of 500
COKE	R218	954	PRIMARY COOLER RE-SPRAY PUMP (NORTH)	02	Accessible	40 CFR 61 Subpart L	Pump	0	Standard Service	UNCLASSIFIED	FALSE	Light Liquid	FALSE	24-Oct-16	04-Apr-18	23-Nov-16	VIS	PPM Consulting Technician	UNCLASSIFIED	Leak Limit of 500
COKE	R218	954	PRIMARY COOLER RE-SPRAY PUMP (NORTH)	02	Accessible	40 CFR 61 Subpart L	Pump	0	Standard Service	UNCLASSIFIED	FALSE	Light Liquid	FALSE	24-Oct-16	09-Apr-18	23-Nov-16	VIS	PPM Consulting Technician	UNCLASSIFIED	Leak Limit of 500
COKE	R218	954	PRIMARY COOLER RE-SPRAY PUMP (NORTH)	02	Accessible	40 CFR 61 Subpart L	Pump	0	Standard Service	UNCLASSIFIED	FALSE	Light Liquid	FALSE	24-Oct-16	15-Jan-18	23-Nov-16	VIS	PPM Consulting Technician	UNCLASSIFIED	Leak Limit of 500
COKE	R218	954	PRIMARY COOLER RE-SPRAY PUMP (NORTH)	02	Accessible	40 CFR 61 Subpart L	Pump	0	Standard Service	UNCLASSIFIED	FALSE	Light Liquid	FALSE	24-Oct-16	29-Jan-18	23-Nov-16	VIS	PPM Consulting Technician	UNCLASSIFIED	Leak Limit of 500
COKE	R218	954	PRIMARY COOLER RE-SPRAY PUMP (NORTH)	02	Accessible	40 CFR 61 Subpart L	Pump	0	Standard Service	UNCLASSIFIED	FALSE	Light Liquid	FALSE	24-Oct-16	06-Feb-18	23-Nov-16	VIS	PPM Consulting Technician	UNCLASSIFIED	Leak Limit of 500
COKE	R218	954	PRIMARY COOLER RE-SPRAY PUMP (NORTH)	02	Accessible	40 CFR 61 Subpart L	Pump	0	Standard Service	UNCLASSIFIED	FALSE	Light Liquid	FALSE	24-Oct-16	21-Feb-18	23-Nov-16	VIS	PPM Consulting Technician	UNCLASSIFIED	Leak Limit of 500
COKE	R218	954	PRIMARY COOLER RE-SPRAY PUMP (NORTH)	02	Accessible	40 CFR 61 Subpart L	Pump	0	Standard Service	UNCLASSIFIED	FALSE	Light Liquid	FALSE	24-Oct-16	26-Feb-18	23-Nov-16	VIS	PPM Consulting Technician	UNCLASSIFIED	Leak Limit of 500
COKE	R218	954	PRIMARY COOLER RE-SPRAY PUMP (NORTH)	02	Accessible	40 CFR 61 Subpart L	Pump	0	Standard Service	UNCLASSIFIED	FALSE	Light Liquid	FALSE	24-Oct-16	17-Apr-18	23-Nov-16	VIS	PPM Consulting Technician	UNCLASSIFIED	Leak Limit of 500
COKE	R218	954	PRIMARY COOLER RE-SPRAY PUMP (NORTH)	02	Accessible	40 CFR 61 Subpart L	Pump	0	Standard Service	UNCLASSIFIED	FALSE	Light Liquid	FALSE	24-Oct-16	02-May-18	23-Nov-16	VIS	PPM Consulting Technician	UNCLASSIFIED	Leak Limit of 500
COKE	R218	954	PRIMARY COOLER RE-SPRAY PUMP (NORTH)	02	Accessible	40 CFR 61 Subpart L	Pump	0	Standard Service	UNCLASSIFIED	FALSE	Light Liquid	FALSE	24-Oct-16	16-May-18	23-Nov-16	VIS	PPM Consulting Technician	UNCLASSIFIED	Leak Limit of 500
COKE	R218	954	PRIMARY COOLER RE-SPRAY PUMP (NORTH)	02	Accessible	40 CFR 61 Subpart L	Pump	0	Standard Service	UNCLASSIFIED	FALSE	Light Liquid	FALSE	24-Oct-16	21-May-18	23-Nov-16	VIS	PPM Consulting Technician	UNCLASSIFIED	Leak Limit of 500
COKE	R218	954	PRIMARY COOLER RE-SPRAY PUMP (NORTH)	02	Accessible	40 CFR 61 Subpart L	Pump	0	Standard Service	UNCLASSIFIED	FALSE	Light Liquid	FALSE	24-Oct-16	30-May-18	23-Nov-16	VIS	PPM Consulting Technician	UNCLASSIFIED	Leak Limit of 500
COKE	R219	961	PRIMARY COOLER RE-SPRAY PUMP (SOUTH)	02	Accessible	40 CFR 61 Subpart L	Pump	0	Standard Service	UNCLASSIFIED	FALSE	Light Liquid	FALSE	24-Oct-16	03-Jan-18	23-Nov-16	VIS	PPM Consulting Technician	UNCLASSIFIED	Leak Limit of 500
COKE	R219	961	PRIMARY COOLER RE-SPRAY PUMP (SOUTH)	02	Accessible	40 CFR 61 Subpart L	Pump	0	Standard Service	UNCLASSIFIED	FALSE	Light Liquid	FALSE	24-Oct-16	09-Jan-18	23-Nov-16	VIS	PPM Consulting Technician	UNCLASSIFIED	Leak Limit of 500
COKE	R219	961	PRIMARY COOLER RE-SPRAY PUMP (SOUTH)	02	Accessible	40 CFR 61 Subpart L	Pump	0	Standard Service	UNCLASSIFIED	FALSE	Light Liquid	FALSE	24-Oct-16	15-Jan-18	23-Nov-16	VIS	PPM Consulting Technician	UNCLASSIFIED	Leak Limit of 500
COKE	R219	961	PRIMARY COOLER RE-SPRAY PUMP (SOUTH)	02	Accessible	40 CFR 61 Subpart L	Pump	0	Standard Service	UNCLASSIFIED	FALSE	Light Liquid	FALSE	24-Oct-16	29-Jan-18	23-Nov-16	VIS	PPM Consulting Technician	UNCLASSIFIED	Leak Limit of 500
COKE	R219	961	PRIMARY COOLER RE-SPRAY PUMP (SOUTH)	02	Accessible	40 CFR 61 Subpart L	Pump	0	Standard Service	UNCLASSIFIED	FALSE	Light Liquid	FALSE	24-Oct-16	06-Feb-18	23-Nov-16	VIS	PPM Consulting Technician	UNCLASSIFIED	Leak Limit of 500
COKE	R219	961	PRIMARY COOLER RE-SPRAY PUMP (SOUTH)	02	Accessible	40 CFR 61 Subpart L	Pump	0	Standard Service	UNCLASSIFIED	FALSE	Light Liquid	FALSE	24-Oct-16	04-Apr-18	23-Nov-16	VIS	PPM Consulting Technician	UNCLASSIFIED	Leak Limit of 500
COKE	R219	961	PRIMARY COOLER RE-SPRAY PUMP (SOUTH)	02	Accessible	40 CFR 61 Subpart L	Pump	0	Standard Service	UNCLASSIFIED	FALSE	Light Liquid	FALSE	24-Oct-16	09-Apr-18	23-Nov-16	VIS	PPM Consulting Technician	UNCLASSIFIED	Leak Limit of 500
COKE	R219	961	PRIMARY COOLER RE-SPRAY PUMP (SOUTH)	02	Accessible	40 CFR 61 Subpart L	Pump	0	Standard Service	UNCLASSIFIED	FALSE	Light Liquid	FALSE	24-Oct-16	17-Apr-18	23-Nov-16	VIS	PPM Consulting Technician	UNCLASSIFIED	Leak Limit of 500
COKE	R219	961	PRIMARY COOLER RE-SPRAY PUMP (SOUTH)	02	Accessible	40 CFR 61 Subpart L	Pump	0	Standard Service	UNCLASSIFIED	FALSE	Light Liquid	FALSE	24-Oct-16	02-May-18	23-Nov-16	VIS	PPM Consulting Technician	UNCLASSIFIED	Leak Limit of 500
COKE	R219	961	PRIMARY COOLER RE-SPRAY PUMP (SOUTH)	02	Accessible	40 CFR 61 Subpart L	Pump	0	Standard Service	UNCLASSIFIED	FALSE	Light Liquid	FALSE	24-Oct-16	16-May-18	23-Nov-16	VIS	PPM Consulting Technician	UNCLASSIFIED	Leak Limit of 500
COKE	R219	961	PRIMARY COOLER RE-SPRAY PUMP (SOUTH)	02	Accessible	40 CFR 61 Subpart L	Pump	0	Standard Service	UNCLASSIFIED	FALSE	Light Liquid	FALSE	24-Oct-16	21-Feb-18	23-Nov-16	VIS	PPM Consulting Technician	UNCLASSIFIED	Leak Limit of 500
COKE	R219	961	PRIMARY COOLER RE-SPRAY PUMP (SOUTH)	02	Accessible	40 CFR 61 Subpart L	Pump	0	Standard Service	UNCLASSIFIED	FALSE	Light Liquid	FALSE	24-Oct-16	26-Feb-18	23-Nov-16	VIS	PPM Consulting Technician	UNCLASSIFIED	Leak Limit of 500
COKE	R219	961	PRIMARY COOLER RE-SPRAY PUMP (SOUTH)	02	Accessible	40 CFR 61 Subpart L	Pump	0	Standard Service	UNCLASSIFIED	FALSE	Light Liquid	FALSE	24-Oct-16	05-Mar-18	23-Nov-16	VIS	PPM Consulting Technician	UNCLASSIFIED	Leak Limit of 500
COKE	R219	961	PRIMARY COOLER RE-SPRAY PUMP (SOUTH)	02	Accessible	40 CFR 61 Subpart L	Pump	0	Standard Service	UNCLASSIFIED	FALSE	Light Liquid	FALSE	24-Oct-16	19-Mar-18	23-Nov-16	VIS	PPM Consulting Technician	UNCLASSIFIED	Leak Limit of 500
COKE	R219	961	PRIMARY COOLER RE-SPRAY PUMP (SOUTH)	02	Accessible	40 CFR 61 Subpart L	Pump	0	Standard Service	UNCLASSIFIED	FALSE	Light Liquid	FALSE	24-Oct-16	28-Mar-18	23-Nov-16	VIS	PPM Consulting Technician	UNCLASSIFIED	Leak Limit of 500
COKE	R219	961	PRIMARY COOLER RE-SPRAY PUMP (SOUTH)	02	Accessible	40 CFR 61 Subpart L	Pump	0	Standard Service	UNCLASSIFIED	FALSE	Light Liquid	FALSE	24-Oct-16	21-May-18	23-Nov-16	VIS	PPM Consulting Technician	UNCLASSIFIED	Leak Limit of 500
COKE	R219	961	PRIMARY COOLER RE-SPRAY PUMP (SOUTH)	02	Accessible	40 CFR 61 Subpart L	Pump	0	Standard Service	UNCLASSIFIED	FALSE	Light Liquid	FALSE	24-Oct-16	30-May-18	23-Nov-16	VIS	PPM Consulting Technician	UNCLASSIFIED	Leak Limit of 500
COKE	R220	1090	PRIMARY COOLER SUMP PUMP (WEST)	02	Accessible	40 CFR 61 Subpart L	Pump	0	Standard Service	UNCLASSIFIED	FALSE	Light Liquid	FALSE	24-Oct-16	29-Jan-18	23-Nov-16	VIS	PPM Consulting Technician	UNCLASSIFIED	Leak Limit of 500
COKE	R220	1090	PRIMARY COOLER SUMP PUMP (WEST)	02	Accessible	40 CFR 61 Subpart L	Pump	0	Standard Service	UNCLASSIFIED	FALSE	Light Liquid	FALSE	24-Oct-16	06-Feb-18	23-Nov-16	VIS	PPM Consulting Technician	UNCLASSIFIED	Leak Limit of 500
COKE	R220	1090	PRIMARY COOLER SUMP PUMP (WEST)	02	Accessible	40 CFR 61 Subpart L	Pump	0	Standard Service	UNCLASSIFIED	FALSE	Light Liquid	FALSE	24-Oct-16	21-Feb-18	23-Nov-16	VIS	PPM Consulting Technician	UNCLASSIFIED	Leak Limit of 500
COKE	R220	1090	PRIMARY COOLER SUMP PUMP (WEST)	02	Accessible	40 CFR 61 Subpart L	Pump	0	Standard Service	UNCLASSIFIED	FALSE	Light Liquid	FALSE	24-Oct-16	26-Feb-18	23-Nov-16	VIS	PPM Consulting Technician	UNCLASSIFIED	Leak Limit of 500
COKE	R220	1090	PRIMARY COOLER SUMP PUMP (WEST)	02	Accessible	40 CFR 61 Subpart L	Pump	0	Standard Service	UNCLASSIFIED	FALSE	Light Liquid	FALSE	24-Oct-16	05-Mar-18	23-Nov-16	VIS	PPM Consulting Technician	UNCLASSIFIED	Leak Limit of 500
COKE	R220	1090	PRIMARY COOLER SUMP PUMP (WEST)	02	Accessible	40 CFR 61 Subpart L	Pump	0	Standard Service	UNCLASSIFIED	FALSE	Light Liquid	FALSE	24-Oct-16	02-May-18	23-Nov-16	VIS	PPM Consulting Technician	UNCLASSIFIED	Leak Limit of 500
COKE	R220	1090	PRIMARY COOLER SUMP PUMP (WEST)	02	Accessible	40 CFR 61 Subpart L	Pump	0	Standard Service	UNCLASSIFIED	FALSE	Light Liquid	FALSE	24-Oct-16	16-May-18	23-Nov-16	VIS	PPM Consulting Technician	UNCLASSIFIED	Leak Limit of 500
COKE	R220	1090	PRIMARY COOLER SUMP PUMP (WEST)	02	Accessible	40 CFR 61 Subpart L	Pump	0	Standard Service	UNCLASSIFIED	FALSE	Light Liquid	FALSE	24-Oct-16	21-May-18	23-Nov-16	VIS	PPM Consulting Technician	UNCLASSIFIED	Leak Limit of 500
COKE	R220	1090	PRIMARY COOLER SUMP PUMP (WEST)	02	Accessible	40 CFR 61 Subpart L	Pump	0	Standard Service	UNCLASSIFIED	FALSE	Light Liquid	FALSE	24-Oct-16	30-May-18	23-Nov-16	VIS	PPM Consulting Technician	UNCLASSIFIED	Leak Limit of 500
COKE	R220	1090	PRIMARY COOLER SUMP PUMP (WEST)	02	Accessible	40 CFR 61 Subpart L	Pump	0	Standard Service	UNCLASSIFIED	FALSE	Light Liquid	FALSE	24-Oct-16	03-Jan-18	23-Nov-16	VIS	PPM Consulting Technician	UNCLASSIFIED	Leak Limit of 500
COKE	R220	1090	PRIMARY COOLER SUMP PUMP (WEST)	02	Accessible	40 CFR 61 Subpart L	Pump	0	Standard Service	UNCLASSIFIED	FALSE	Light Liquid	FALSE	24-Oct-16	09-Jan-18	23-Nov-16	VIS	PPM Consulting Technician	UNCLASSIFIED	Leak Limit of 500
COKE	R220	1090	PRIMARY COOLER SUMP PUMP (WEST)	02	Accessible	40 CFR 61 Subpart L	Pump	0	Standard Service	UNCLASSIFIED	FALSE	Light Liquid	FALSE	24-Oct-16	15-Jan-18	23-Nov-16	VIS	PPM Consulting Technician	UNCLASSIFIED	Leak Limit of 500
COKE	R220	1090	PRIMARY COOLER SUMP PUMP (WEST)	02	Accessible	40 CFR 61 Subpart L	Pump	0	Standard Service	UNCLASSIFIED	FALSE	Light Liquid	FALSE	24-Oct-16	19-Mar-18	23-Nov-16	VIS	PPM Consulting Technician	UNCLASSIFIED	Leak Limit of 500
COKE	R220	1090	PRIMARY COOLER SUMP PUMP (WEST)	02	Accessible	40 CFR 61 Subpart L	Pump	0	Standard Service	UNCLASSIFIED	FALSE	Light Liquid	FALSE	24-Oct-16	28-Mar-18	23-Nov-16	VIS	PPM Consulting Technician	UNCLASSIFIED	Leak Limit of 500
COKE	R220	1090	PRIMARY COOLER SUMP PUMP (WEST)	02	Accessible	40 CFR 61 Subpart L	Pump	0	Standard Service	UNCLASSIFIED	FALSE	Light Liquid	FALSE	24-Oct-16	04-Apr-18	23-Nov-16	VIS	PPM Consulting Technician	UNCLASSIFIED	Leak Limit of 500
COKE	R220	1090	PRIMARY COOLER SUMP PUMP (WEST)	02	Accessible	40 CFR 61 Subpart L	Pump	0	Standard Service	UNCLASSIFIED	FALSE	Light Liquid	FALSE	24-Oct-16	09-Apr-18	23-Nov-16	VIS	PPM Consulting Technician	UNCLASSIFIED	Leak Limit of 500
COKE	R220	1090	PRIMARY COOLER SUMP PUMP (WEST)	02	Accessible	40 CFR 61 Subpart L	Pump	0	Standard Service	UNCLASSIFIED	FALSE	Light Liquid	FALSE	24-Oct-16	17-Apr-18	23-Nov-16	VIS	PPM Consulting Technician	UNCLASSIFIED	Leak Limit of 500
COKE	R221	1091	PRIMARY COOLER SUMP PUMP (EAST)	02	Accessible	40 CFR 61 Subpart L	Pump	0	Standard Service	UNCLASSIFIED	FALSE	Light Liquid	FALSE	24-Oct-16	03-Jan-18	23-Nov-16	VIS	PPM Consulting Technician	UNCLASSIFIED	Leak Limit of 500
COKE	R221	1091	PRIMARY COOLER SUMP PUMP (EAST)	02	Accessible	40 CFR 61 Subpart L	Pump	0	Standard Service	UNCLASSIFIED	FALSE	Light Liquid	FALSE	24-Oct-16	26-Feb-18	23-Nov-16	VIS	PPM Consulting Technician	UNCLASSIFIED	Leak Limit of 500
COKE	R221	1091	PRIMARY COOLER SUMP PUMP (EAST)	02	Accessible	40 CFR 61 Subpart L	Pump	0	Standard Service	UNCLASSIFIED	FALSE	Light Liquid	FALSE	24-Oct-16	05-Mar-18	23-Nov-16	VIS	PPM Consulting Technician	UNCLASSIFIED	Leak Limit of 500
COKE	R221	1091	PRIMARY COOLER SUMP PUMP (EAST)	02	Accessible	40 CFR 61 Subpart L	Pump	0	Standard Service	UNCLASSIFIED	FALSE	Light Liquid	FALSE	24-Oct-16	19-Mar-18	23-Nov-16	VIS	PPM Consulting Technician	UNCLASSIFIED	Leak Limit of 500
COKE	R221	1091	PRIMARY COOLER SUMP PUMP (EAST)	02	Accessible	40 CFR 61 Subpart L	Pump	0	Standard Service	UNCLASSIFIED	FALSE	Light Liquid	FALSE	24-Oct-16	28-Mar-18	23-Nov-16	VIS	PPM Consulting Technician	UNCLASSIFIED	Leak Limit of 500
COKE	R221	1091	PRIMARY COOLER SUMP PUMP (EAST)	02	Accessible	40 CFR 61 Subpart L	Pump	0	Standard Service	UNCLASSIFIED	FALSE	Light Liquid	FALSE	24-Oct-16	04-Apr-18	23-Nov-16	VIS	PPM Consulting Technician	UNCLASSIFIED	Leak Limit of 500
COKE	R221	1091	PRIMARY COOLER SUMP PUMP (EAST)	02	Accessible	40 CFR 61 Subpart L	Pump	0	Standard Service	UNCLASSIFIED	FALSE	Light Liquid	FALSE	24-Oct-16	30-May-18	23-Nov-16	VIS	PPM Consulting Technician	UNCLASSIFIED	Leak Limit of 500
COKE	R221	1091	PRIMARY COOLER SUMP PUMP (EAST)	02	Accessible	40 CFR 61 Subpart L	Pump	0	Standard Service	UNCLASSIFIED	FALSE	Light Liquid	FALSE	24-Oct-16	09-Jan-18	23-Nov-16	VIS	PPM Consulting Technician	UNCLASSIFIED	Leak Limit of 500
COKE	R221	1091	PRIMARY COOLER SUMP PUMP (EAST)	02	Accessible	40 CFR 61 Subpart L	Pump	0	Standard Service	UNCLASSIFIED	FALSE	Light Liquid	FALSE	24-Oct-16	15-Jan-18	23-Nov-16	VIS	PPM Consulting Technician	UNCLASSIFIED	Leak Limit of 500
COKE	R221	1091	PRIMARY COOLER SUMP PUMP (EAST)	02	Accessible	40 CFR 61 Subpart L	Pump	0	Standard Service	UNCLASSIFIED	FALSE	Light Liquid	FALSE	24-Oct-16	29-Jan-18	23-Nov-16	VIS	PPM Consulting Technician	UNCLASSIFIED	Leak Limit of 500
COKE	R221	1091	PRIMARY COOLER SUMP PUMP (EAST)	02	Accessible	40 CFR 61 Subpart L	Pump	0	Standard Service	UNCLASSIFIED	FALSE	Light Liquid	FALSE	24-Oct-16	06-Feb-18	23-Nov-16	VIS	PPM Consulting Technician	UNCLASSIFIED	Leak Limit of 500

UNIT_CODE	TAG_ NUMBER	ROUTE	LOCATION	LEVEL	ACCESS_DESC	GROUP_DESC	EQUITYPE DESC	SIZE	CONFIG_DESC	PRODUCT_DESC	CLOSED_ VENT_SYSTEM	SERVICE_DESC	UNDER_300_ HOURS_SERVICE	DATE_ADDED	DATE_INSPECTED	DATE_IN_SERVICE	INSPTYPE _CODE	TECH_DESC	INSTRUM_DESC	LEAKLIM_DESC
COKE	R221	1091	PRIMARY COOLER SUMP PUMP (EAST)	02	Accessible	40 CFR 61 Subpart L	Pump	0	Standard Service	UNCLASSIFIED	FALSE	Light Liquid	FALSE	24-Oct-16	21-Feb-18	23-Nov-16	VIS	PPM Consulting Technician	UNCLASSIFIED	Leak Limit of 500
COKE	R221	1091	PRIMARY COOLER SUMP PUMP (EAST)	02	Accessible	40 CFR 61 Subpart L	Pump	0	Standard Service	UNCLASSIFIED	FALSE	Light Liquid	FALSE	24-Oct-16	09-Apr-18	23-Nov-16	VIS	PPM Consulting Technician	UNCLASSIFIED	Leak Limit of 500
COKE	R221	1091	PRIMARY COOLER SUMP PUMP (EAST)	02	Accessible	40 CFR 61 Subpart L	Pump	0	Standard Service	UNCLASSIFIED	FALSE	Light Liquid	FALSE	24-Oct-16	17-Apr-18	23-Nov-16	VIS	PPM Consulting Technician	UNCLASSIFIED	Leak Limit of 500
COKE	R221	1091	PRIMARY COOLER SUMP PUMP (EAST)	02	Accessible	40 CFR 61 Subpart L	Pump	0	Standard Service	UNCLASSIFIED	FALSE	Light Liquid	FALSE	24-Oct-16	02-May-18	23-Nov-16	VIS	PPM Consulting Technician	UNCLASSIFIED	Leak Limit of 500
COKE	R221	1091	PRIMARY COOLER SUMP PUMP (EAST)	02	Accessible	40 CFR 61 Subpart L	Pump	0	Standard Service	UNCLASSIFIED	FALSE	Light Liquid	FALSE	24-Oct-16	16-May-18	23-Nov-16	VIS	PPM Consulting Technician	UNCLASSIFIED	Leak Limit of 500
COKE	R221	1091	PRIMARY COOLER SUMP PUMP (EAST)	02	Accessible	40 CFR 61 Subpart L	Pump	0	Standard Service	UNCLASSIFIED	FALSE	Light Liquid	FALSE	24-Oct-16	21-May-18	23-Nov-16	VIS	PPM Consulting Technician	UNCLASSIFIED	Leak Limit of 500
COKE	R222	1122	DITCH PUMP @ FLUSHING LIQUOR	02	Accessible	40 CFR 61 Subpart L	Pump	0	Standard Service	UNCLASSIFIED	FALSE	Light Liquid	FALSE	24-Oct-16	03-Jan-18	23-Nov-16	VIS	PPM Consulting Technician	UNCLASSIFIED	Leak Limit of 500
COKE	R222	1122	DITCH PUMP @ FLUSHING LIQUOR	02	Accessible	40 CFR 61 Subpart L	Pump	0	Standard Service	UNCLASSIFIED	FALSE	Light Liquid	FALSE	24-Oct-16	09-Jan-18	23-Nov-16	VIS	PPM Consulting Technician	UNCLASSIFIED	Leak Limit of 500
COKE	R222	1122	DITCH PUMP @ FLUSHING LIQUOR	02	Accessible	40 CFR 61 Subpart L	Pump	0	Standard Service	UNCLASSIFIED	FALSE	Light Liquid	FALSE	24-Oct-16	15-Jan-18	23-Nov-16	VIS	PPM Consulting Technician	UNCLASSIFIED	Leak Limit of 500
COKE	R222	1122	DITCH PUMP @ FLUSHING LIQUOR	02	Accessible	40 CFR 61 Subpart L	Pump	0	Standard Service	UNCLASSIFIED	FALSE	Light Liquid	FALSE	24-Oct-16	29-Jan-18	23-Nov-16	VIS	PPM Consulting Technician	UNCLASSIFIED	Leak Limit of 500
COKE	R222	1122	DITCH PUMP @ FLUSHING LIQUOR	02	Accessible	40 CFR 61 Subpart L	Pump	0	Standard Service	UNCLASSIFIED	FALSE	Light Liquid	FALSE	24-Oct-16	06-Feb-18	23-Nov-16	VIS	PPM Consulting Technician	UNCLASSIFIED	Leak Limit of 500
COKE	R222	1122	DITCH PUMP @ FLUSHING LIQUOR	02	Accessible	40 CFR 61 Subpart L	Pump	0	Standard Service	UNCLASSIFIED	FALSE	Light Liquid	FALSE	24-Oct-16	21-Feb-18	23-Nov-16	VIS	PPM Consulting Technician	UNCLASSIFIED	Leak Limit of 500
COKE	R222	1122	DITCH PUMP @ FLUSHING LIQUOR	02	Accessible	40 CFR 61 Subpart L	Pump	0	Standard Service	UNCLASSIFIED	FALSE	Light Liquid	FALSE	24-Oct-16	26-Feb-18	23-Nov-16	VIS	PPM Consulting Technician	UNCLASSIFIED	Leak Limit of 500
COKE	R222	1122	DITCH PUMP @ FLUSHING LIQUOR	02	Accessible	40 CFR 61 Subpart L	Pump	0	Standard Service	UNCLASSIFIED	FALSE	Light Liquid	FALSE	24-Oct-16	05-Mar-18	23-Nov-16	VIS	PPM Consulting Technician	UNCLASSIFIED	Leak Limit of 500
COKE	R223	1117	FLUSHING LIQUOR PUMP (EAST)	02	Accessible	40 CFR 61 Subpart L	Pump	0	Standard Service	UNCLASSIFIED	FALSE	Light Liquid	FALSE	24-Oct-16	03-Jan-18	23-Nov-16	VIS	PPM Consulting Technician	UNCLASSIFIED	Leak Limit of 500
COKE	R223	1117	FLUSHING LIQUOR PUMP (EAST)	02	Accessible	40 CFR 61 Subpart L	Pump	0	Standard Service	UNCLASSIFIED	FALSE	Light Liquid	FALSE	24-Oct-16	09-Jan-18	23-Nov-16	VIS	PPM Consulting Technician	UNCLASSIFIED	Leak Limit of 500
COKE	R223	1117	FLUSHING LIQUOR PUMP (EAST)	02	Accessible	40 CFR 61 Subpart L	Pump	0	Standard Service	UNCLASSIFIED	FALSE	Light Liquid	FALSE	24-Oct-16	15-Jan-18	23-Nov-16	VIS	PPM Consulting Technician	UNCLASSIFIED	Leak Limit of 500
COKE	R223	1117	FLUSHING LIQUOR PUMP (EAST)	02	Accessible	40 CFR 61 Subpart L	Pump	0	Standard Service	UNCLASSIFIED	FALSE	Light Liquid	FALSE	24-Oct-16	29-Jan-18	23-Nov-16	VIS	PPM Consulting Technician	UNCLASSIFIED	Leak Limit of 500
COKE	R223	1117	FLUSHING LIQUOR PUMP (EAST)	02	Accessible	40 CFR 61 Subpart L	Pump	0	Standard Service	UNCLASSIFIED	FALSE	Light Liquid	FALSE	24-Oct-16	06-Feb-18	23-Nov-16	VIS	PPM Consulting Technician	UNCLASSIFIED	Leak Limit of 500
COKE	R223	1117	FLUSHING LIQUOR PUMP (EAST)	02	Accessible	40 CFR 61 Subpart L	Pump	0	Standard Service	UNCLASSIFIED	FALSE	Light Liquid	FALSE	24-Oct-16	21-Feb-18	23-Nov-16	VIS	PPM Consulting Technician	UNCLASSIFIED	Leak Limit of 500
COKE	R223	1117	FLUSHING LIQUOR PUMP (EAST)	02	Accessible	40 CFR 61 Subpart L	Pump	0	Standard Service	UNCLASSIFIED	FALSE	Light Liquid	FALSE	24-Oct-16	09-Apr-18	23-Nov-16	VIS	PPM Consulting Technician	UNCLASSIFIED	Leak Limit of 500
COKE	R223	1117	FLUSHING LIQUOR PUMP (EAST)	02	Accessible	40 CFR 61 Subpart L	Pump	0	Standard Service	UNCLASSIFIED	FALSE	Light Liquid	FALSE	24-Oct-16	17-Apr-18	23-Nov-16	VIS	PPM Consulting Technician	UNCLASSIFIED	Leak Limit of 500
COKE	R223	1117	FLUSHING LIQUOR PUMP (EAST)	02	Accessible	40 CFR 61 Subpart L	Pump	0	Standard Service	UNCLASSIFIED	FALSE	Light Liquid	FALSE	24-Oct-16	02-May-18	23-Nov-16	VIS	PPM Consulting Technician	UNCLASSIFIED	Leak Limit of 500
COKE	R223	1117	FLUSHING LIQUOR PUMP (EAST)	02	Accessible	40 CFR 61 Subpart L	Pump	0	Standard Service	UNCLASSIFIED	FALSE	Light Liquid	FALSE	24-Oct-16	16-May-18	23-Nov-16	VIS	PPM Consulting Technician	UNCLASSIFIED	Leak Limit of 500
COKE	R223	1117	FLUSHING LIQUOR PUMP (EAST)	02	Accessible	40 CFR 61 Subpart L	Pump	0	Standard Service	UNCLASSIFIED	FALSE	Light Liquid	FALSE	24-Oct-16	21-May-18	23-Nov-16	VIS	PPM Consulting Technician	UNCLASSIFIED	Leak Limit of 500
COKE	R223	1117	FLUSHING LIQUOR PUMP (EAST)	02	Accessible	40 CFR 61 Subpart L	Pump	0	Standard Service	UNCLASSIFIED	FALSE	Light Liquid	FALSE	24-Oct-16	26-Feb-18	23-Nov-16	VIS	PPM Consulting Technician	UNCLASSIFIED	Leak Limit of 500
COKE	R223	1117	FLUSHING LIQUOR PUMP (EAST)	02	Accessible	40 CFR 61 Subpart L	Pump	0	Standard Service	UNCLASSIFIED	FALSE	Light Liquid	FALSE	24-Oct-16	05-Mar-18	23-Nov-16	VIS	PPM Consulting Technician	UNCLASSIFIED	Leak Limit of 500
COKE	R223	1117	FLUSHING LIQUOR PUMP (EAST)	02	Accessible	40 CFR 61 Subpart L	Pump	0	Standard Service	UNCLASSIFIED	FALSE	Light Liquid	FALSE	24-Oct-16	19-Mar-18	23-Nov-16	VIS	PPM Consulting Technician	UNCLASSIFIED	Leak Limit of 500
COKE	R223	1117	FLUSHING LIQUOR PUMP (EAST)	02	Accessible	40 CFR 61 Subpart L	Pump	0	Standard Service	UNCLASSIFIED	FALSE	Light Liquid	FALSE	24-Oct-16	28-Mar-18	23-Nov-16	VIS	PPM Consulting Technician	UNCLASSIFIED	Leak Limit of 500
COKE	R223	1117	FLUSHING LIQUOR PUMP (EAST)	02	Accessible	40 CFR 61 Subpart L	Pump	0	Standard Service	UNCLASSIFIED	FALSE	Light Liquid	FALSE	24-Oct-16	04-Apr-18	23-Nov-16	VIS	PPM Consulting Technician	UNCLASSIFIED	Leak Limit of 500
COKE	R223	1117	FLUSHING LIQUOR PUMP (EAST)	02	Accessible	40 CFR 61 Subpart L	Pump	0	Standard Service	UNCLASSIFIED	FALSE	Light Liquid	FALSE	24-Oct-16	30-May-18	23-Nov-16	VIS	PPM Consulting Technician	UNCLASSIFIED	Leak Limit of 500
COKE	R224	1123	FLUSHING LIQUOR PUMP (MIDDLE)	02	Accessible	40 CFR 61 Subpart L	Pump	0	Standard Service	UNCLASSIFIED	FALSE	Light Liquid	FALSE	24-Oct-16	06-Feb-18	23-Nov-16	VIS	PPM Consulting Technician	UNCLASSIFIED	Leak Limit of 500
COKE	R224	1123	FLUSHING LIQUOR PUMP (MIDDLE)	02	Accessible	40 CFR 61 Subpart L	Pump	0	Standard Service	UNCLASSIFIED	FALSE	Light Liquid	FALSE	24-Oct-16	21-Feb-18	23-Nov-16	VIS	PPM Consulting Technician	UNCLASSIFIED	Leak Limit of 500
COKE	R224	1123	FLUSHING LIQUOR PUMP (MIDDLE)	02	Accessible	40 CFR 61 Subpart L	Pump	0	Standard Service	UNCLASSIFIED	FALSE	Light Liquid	FALSE	24-Oct-16	26-Feb-18	23-Nov-16	VIS	PPM Consulting Technician	UNCLASSIFIED	Leak Limit of 500
COKE	R224	1123	FLUSHING LIQUOR PUMP (MIDDLE)	02	Accessible	40 CFR 61 Subpart L	Pump	0	Standard Service	UNCLASSIFIED	FALSE	Light Liquid	FALSE	24-Oct-16	05-Mar-18	23-Nov-16	VIS	PPM Consulting Technician	UNCLASSIFIED	Leak Limit of 500
COKE	R224	1123	FLUSHING LIQUOR PUMP (MIDDLE)	02	Accessible	40 CFR 61 Subpart L	Pump	0	Standard Service	UNCLASSIFIED	FALSE	Light Liquid	FALSE	24-Oct-16	19-Mar-18	23-Nov-16	VIS	PPM Consulting Technician	UNCLASSIFIED	Leak Limit of 500
COKE	R224	1123	FLUSHING LIQUOR PUMP (MIDDLE)	02	Accessible	40 CFR 61 Subpart L	Pump	0	Standard Service	UNCLASSIFIED	FALSE	Light Liquid	FALSE	24-Oct-16	16-May-18	23-Nov-16	VIS	PPM Consulting Technician	UNCLASSIFIED	Leak Limit of 500
COKE	R224	1123	FLUSHING LIQUOR PUMP (MIDDLE)	02	Accessible	40 CFR 61 Subpart L	Pump	0	Standard Service	UNCLASSIFIED	FALSE	Light Liquid	FALSE	24-Oct-16	21-May-18	23-Nov-16	VIS	PPM Consulting Technician	UNCLASSIFIED	Leak Limit of 500
COKE	R224	1123	FLUSHING LIQUOR PUMP (MIDDLE)	02	Accessible	40 CFR 61 Subpart L	Pump	0	Standard Service	UNCLASSIFIED	FALSE	Light Liquid	FALSE	24-Oct-16	30-May-18	23-Nov-16	VIS	PPM Consulting Technician	UNCLASSIFIED	Leak Limit of 500
COKE	R224	1123	FLUSHING LIQUOR PUMP (MIDDLE)	02	Accessible	40 CFR 61 Subpart L	Pump	0	Standard Service	UNCLASSIFIED	FALSE	Light Liquid	FALSE	24-Oct-16	03-Jan-18	23-Nov-16	VIS	PPM Consulting Technician	UNCLASSIFIED	Leak Limit of 500
COKE	R224	1123	FLUSHING LIQUOR PUMP (MIDDLE)	02	Accessible	40 CFR 61 Subpart L	Pump	0	Standard Service	UNCLASSIFIED	FALSE	Light Liquid	FALSE	24-Oct-16	09-Jan-18	23-Nov-16	VIS	PPM Consulting Technician	UNCLASSIFIED	Leak Limit of 500
COKE	R224	1123	FLUSHING LIQUOR PUMP (MIDDLE)	02	Accessible	40 CFR 61 Subpart L	Pump	0	Standard Service	UNCLASSIFIED	FALSE	Light Liquid	FALSE	24-Oct-16	15-Jan-18	23-Nov-16	VIS	PPM Consulting Technician	UNCLASSIFIED	Leak Limit of 500
COKE	R224	1123	FLUSHING LIQUOR PUMP (MIDDLE)	02	Accessible	40 CFR 61 Subpart L	Pump	0	Standard Service	UNCLASSIFIED	FALSE	Light Liquid	FALSE	24-Oct-16	29-Jan-18	23-Nov-16	VIS	PPM Consulting Technician	UNCLASSIFIED	Leak Limit of 500
COKE	R224	1123	FLUSHING LIQUOR PUMP (MIDDLE)	02	Accessible	40 CFR 61 Subpart L	Pump	0	Standard Service	UNCLASSIFIED	FALSE	Light Liquid	FALSE	24-Oct-16	28-Mar-18	23-Nov-16	VIS	PPM Consulting Technician	UNCLASSIFIED	Leak Limit of 500
COKE	R224	1123	FLUSHING LIQUOR PUMP (MIDDLE)	02	Accessible	40 CFR 61 Subpart L	Pump	0	Standard Service	UNCLASSIFIED	FALSE	Light Liquid	FALSE	24-Oct-16	04-Apr-18	23-Nov-16	VIS	PPM Consulting Technician	UNCLASSIFIED	Leak Limit of 500
COKE	R224	1123	FLUSHING LIQUOR PUMP (MIDDLE)	02	Accessible	40 CFR 61 Subpart L	Pump	0	Standard Service	UNCLASSIFIED	FALSE	Light Liquid	FALSE	24-Oct-16	09-Apr-18	23-Nov-16	VIS	PPM Consulting Technician	UNCLASSIFIED	Leak Limit of 500
COKE	R224	1123	FLUSHING LIQUOR PUMP (MIDDLE)	02	Accessible	40 CFR 61 Subpart L	Pump	0	Standard Service	UNCLASSIFIED	FALSE	Light Liquid	FALSE	24-Oct-16	17-Apr-18	23-Nov-16	VIS	PPM Consulting Technician	UNCLASSIFIED	Leak Limit of 500
COKE	R224	1123	FLUSHING LIQUOR PUMP (MIDDLE)	02	Accessible	40 CFR 61 Subpart L	Pump	0	Standard Service	UNCLASSIFIED	FALSE	Light Liquid	FALSE	24-Oct-16	02-May-18	23-Nov-16	VIS	PPM Consulting Technician	UNCLASSIFIED	Leak Limit of 500
COKE	R224	1123	FLUSHING LIQUOR PUMP (MIDDLE)	02	Accessible	40 CFR 61 Subpart L	Pump	0	Standard Service	UNCLASSIFIED	FALSE	Light Liquid	FALSE	24-Oct-16	16-May-18	23-Nov-16	VIS	PPM Consulting Technician	UNCLASSIFIED	Leak Limit of 500
COKE	R225	1132	FLUSHING LIQUOR PUMP (WEST)	02	Accessible	40 CFR 61 Subpart L	Pump	0	Standard Service	UNCLASSIFIED	FALSE	Light Liquid	FALSE	24-Oct-16	03-Jan-18	23-Nov-16	VIS	PPM Consulting Technician	UNCLASSIFIED	Leak Limit of 500
COKE	R225	1132	FLUSHING LIQUOR PUMP (WEST)	02	Accessible	40 CFR 61 Subpart L	Pump	0	Standard Service	UNCLASSIFIED	FALSE	Light Liquid	FALSE	24-Oct-16	09-Jan-18	23-Nov-16	VIS	PPM Consulting Technician	UNCLASSIFIED	Leak Limit of 500
COKE	R225	1132	FLUSHING LIQUOR PUMP (WEST)	02	Accessible	40 CFR 61 Subpart L	Pump	0	Standard Service	UNCLASSIFIED	FALSE	Light Liquid	FALSE	24-Oct-16	05-Mar-18	23-Nov-16	VIS	PPM Consulting Technician	UNCLASSIFIED	Leak Limit of 500
COKE	R225	1132	FLUSHING LIQUOR PUMP (WEST)	02	Accessible	40 CFR 61 Subpart L	Pump	0	Standard Service	UNCLASSIFIED	FALSE	Light Liquid	FALSE	24-Oct-16	19-Mar-18	23-Nov-16	VIS	PPM Consulting Technician	UNCLASSIFIED	Leak Limit of 500
COKE	R225	1132	FLUSHING LIQUOR PUMP (WEST)	02	Accessible	40 CFR 61 Subpart L	Pump	0	Standard Service	UNCLASSIFIED	FALSE	Light Liquid	FALSE	24-Oct-16	28-Mar-18	23-Nov-16	VIS	PPM Consulting Technician	UNCLASSIFIED	Leak Limit of 500
COKE	R225	1132	FLUSHING LIQUOR PUMP (WEST)	02	Accessible	40 CFR 61 Subpart L	Pump	0	Standard Service	UNCLASSIFIED	FALSE	Light Liquid	FALSE	24-Oct-16	04-Apr-18	23-Nov-16	VIS	PPM Consulting Technician	UNCLASSIFIED	Leak Limit of 500
COKE	R225	1132	FLUSHING LIQUOR PUMP (WEST)	02	Accessible	40 CFR 61 Subpart L	Pump	0	Standard Service	UNCLASSIFIED	FALSE	Light Liquid	FALSE	24-Oct-16	09-Apr-18	23-Nov-16	VIS	PPM Consulting Technician	UNCLASSIFIED	Leak Limit of 500
COKE	R225	1132	FLUSHING LIQUOR PUMP (WEST)	02	Accessible	40 CFR 61 Subpart L	Pump	0	Standard Service	UNCLASSIFIED	FALSE	Light Liquid	FALSE	24-Oct-16	15-Jan-18	23-Nov-16	VIS	PPM Consulting Technician	UNCLASSIFIED	Leak Limit of 500
COKE	R225	1132	FLUSHING LIQUOR PUMP (WEST)	02	Accessible	40 CFR 61 Subpart L	Pump	0	Standard Service	UNCLASSIFIED	FALSE	Light Liquid	FALSE	24-Oct-16	29-Jan-18	23-Nov-16	VIS	PPM Consulting Technician	UNCLASSIFIED	Leak Limit of 500
COKE	R225	1132	FLUSHING LIQUOR PUMP (WEST)	02	Accessible	40 CFR 61 Subpart L	Pump	0	Standard Service	UNCLASSIFIED	FALSE	Light Liquid	FALSE	24-Oct-16	06-Feb-18	23-Nov-16	VIS	PPM Consulting Technician	UNCLASSIFIED	Leak Limit of 500
COKE	R225	1132	FLUSHING LIQUOR PUMP (WEST)	02	Accessible	40 CFR 61 Subpart L	Pump	0	Standard Service	UNCLASSIFIED	FALSE	Light Liquid	FALSE	24-Oct-16	21-Feb-18	23-Nov-16	VIS	PPM Consulting Technician	UNCLASSIFIED	Leak Limit of 500
COKE	R225	1132	FLUSHING LIQUOR PUMP (WEST)	02	Accessible	40 CFR 61 Subpart L	Pump	0	Standard Service	UNCLASSIFIED	FALSE	Light Liquid	FALSE	24-Oct-16	26-Feb-18	23-Nov-16	VIS	PPM Consulting Technician	UNCLASSIFIED	Leak Limit of 500
COKE	R225	1132	FLUSHING LIQUOR PUMP (WEST)	02	Accessible	40 CFR 61 Subpart L	Pump	0	Standard Service	UNCLASSIFIED	FALSE	Light Liquid	FALSE	24-Oct-16	17-Apr-18	23-Nov-16	VIS	PPM Consulting Technician	UNCLASSIFIED	Leak Limit of 500
COKE	R225	1132	FLUSHING LIQUOR PUMP (WEST)	02	Accessible	40 CFR 61 Subpart L	Pump	0	Standard Service	UNCLASSIFIED	FALSE	Light Liquid	FALSE	24-Oct-16	02-May-18	23-Nov-16	VIS	PPM Consulting Technician	UNCLASSIFIED	Leak Limit of 500
COKE	R225	1132	FLUSHING LIQUOR PUMP (WEST)	02	Accessible	40 CFR 61 Subpart L	Pump	0	Standard Service	UNCLASSIFIED	FALSE	Light Liquid	FALSE	24-Oct-16	16-May-18	23-Nov-16	VIS	PPM Consulting Technician	UNCLASSIFIED	Leak Limit of 500
COKE	R225	1132	FLUSHING LIQUOR PUMP (WEST)	02	Accessible	40 CFR 61 Subpart L	Pump	0	Standard Service	UNCLASSIFIED	FALSE	Light Liquid	FALSE	24-Oct-16	21-May-18	23-Nov-16	VIS	PPM Consulting Technician	UNCLASSIFIED	Leak Limit of 500
COKE	R225	1132	FLUSHING LIQUOR PUMP (WEST)	02	Accessible	40 CFR 61 Subpart L	Pump	0	Standard Service	UNCLASSIFIED	FALSE	Light Liquid	FALSE	24-Oct-16	30-May-18	23-Nov-16	VIS	PPM Consulting Technician	UNCLASSIFIED	Leak Limit of 500
COKE	R226	1101	TAR TRANSFER PUMP (EAST)	02	Accessible	40 CFR 61 Subpart L	Pump	0	Standard Service	UNCLASSIFIED	FALSE	Light Liquid	FALSE	24-Oct-16	03-Jan-18	23-Nov-16	VIS	PPM Consulting Technician	UNCLASSIFIED	Leak Limit of 500
COKE	R226	1101	TAR TRANSFER PUMP (EAST)	02	Accessible	40 CFR 61 Subpart L	Pump	0	Standard Service	UNCLASSIFIED	FALSE	Light Liquid	FALSE	24-Oct-16	09-Jan-18	23-Nov-16	VIS	PPM Consulting Technician	UNCLASSIFIED	Leak Limit of 500
COKE	R226	1101	TAR TRANSFER PUMP (EAST)	02	Accessible	40 CFR 61 Subpart L	Pump	0	Standard Service	UNCLASSIFIED	FALSE	Light Liquid	FALSE	24-Oct-16	15-Jan-18	23-Nov-16	VIS	PPM Consulting Technician	UNCLASSIFIED	Leak Limit of 500
COKE	R226	1101	TAR TRANSFER PUMP (EAST)	02	Accessible	40 CFR 61 Subpart L	Pump	0	Standard Service	UNCLASSIFIED	FALSE	Light Liquid	FALSE	24-Oct-16	29-Jan-18	23-Nov-16	VIS	PPM Consulting Technician	UNCLASSIFIED	Leak Limit of 500
COKE	R226	1101	TAR TRANSFER PUMP (EAST)	02	Accessible	40 CFR 61 Subpart L	Pump	0	Standard Service	UNCLASSIFIED	FALSE	Light Liquid	FALSE	24-Oct-16	06-Feb-18	23-Nov-16	VIS	PPM Consulting Technician	UNCLASSIFIED	Leak Limit of 500
COKE	R226	1101	TAR TRANSFER PUMP (EAST)	02	Accessible	40 CFR 61 Subpart L	Pump	0	Standard Service	UNCLASSIFIED	FALSE	Light Liquid	FALSE	24-Oct-16	04-Apr-18	23-Nov-16	VIS	PPM Consulting Technician	UNCLASSIFIED	Leak Limit of 500
COKE	R226	1101	TAR TRANSFER PUMP (EAST)	02	Accessible	40 CFR 61 Subpart L	Pump	0	Standard Service	UNCLASSIFIED	FALSE	Light Liquid	FALSE	24-Oct-16	09-Apr-18	23-Nov-16	VIS	PPM Consulting Technician	UNCLASSIFIED	Leak Limit of 500
COKE	R226	1101	TAR TRANSFER PUMP (EAST)	02	Accessible	40 CFR 61 Subpart L	Pump	0	Standard Service	UNCLASSIFIED	FALSE	Light Liquid	FALSE	24-Oct-16	17-Apr-18	23-Nov-16	VIS	PPM Consulting Technician	UNCLASSIFIED	Leak Limit of 500
COKE	R226	1101	TAR TRANSFER PUMP (EAST)	02	Accessible	40 CFR 61 Subpart L	Pump	0	Standard Service	UNCLASSIFIED	FALSE	Light Liquid	FALSE	24-Oct-16	02-May-18	23-Nov-16	VIS	PPM Consulting Technician	UNCLASSIFIED	Leak Limit of 500
COKE	R226	1101	TAR TRANSFER PUMP (EAST)	02	Accessible	40 CFR 61 Subpart L	Pump	0	Standard Service	UNCLASSIFIED	FALSE	Light Liquid	FALSE	24-Oct-16	16-May-18	23-Nov-16	VIS	PPM Consulting Technician	UNCLASSIFIED	Leak Limit of 500

UNIT_CODE	TAG_ NUMBER	ROUTE	LOCATION	LEVEL	ACCESS_DESC	GROUP_DESC	EQUITYPE DESC	SIZE	CONFIG_DESC	PRODUCT_DESC	CLOSED_ VENT_SYSTEM	SERVICE_DESC	UNDER_300_ HOURS_SERVICE	DATE_ADDED	DATE_INSPECTED	DATE_IN_SERVICE	INSPTYPE _CODE	TECH_DESC	INSTRUM_DESC	LEAKLIM_DESC
COKE	R226	1101	TAR TRANSFER PUMP (EAST)	02	Accessible	40 CFR 61 Subpart L	Pump	0	Standard Service	UNCLASSIFIED	FALSE	Light Liquid	FALSE	24-Oct-16	21-Feb-18	23-Nov-16	VIS	PPM Consulting Technician	UNCLASSIFIED	Leak Limit of 500
COKE	R226	1101	TAR TRANSFER PUMP (EAST)	02	Accessible	40 CFR 61 Subpart L	Pump	0	Standard Service	UNCLASSIFIED	FALSE	Light Liquid	FALSE	24-Oct-16	26-Feb-18	23-Nov-16	VIS	PPM Consulting Technician	UNCLASSIFIED	Leak Limit of 500
COKE	R226	1101	TAR TRANSFER PUMP (EAST)	02	Accessible	40 CFR 61 Subpart L	Pump	0	Standard Service	UNCLASSIFIED	FALSE	Light Liquid	FALSE	24-Oct-16	05-Mar-18	23-Nov-16	VIS	PPM Consulting Technician	UNCLASSIFIED	Leak Limit of 500
COKE	R226	1101	TAR TRANSFER PUMP (EAST)	02	Accessible	40 CFR 61 Subpart L	Pump	0	Standard Service	UNCLASSIFIED	FALSE	Light Liquid	FALSE	24-Oct-16	19-Mar-18	23-Nov-16	VIS	PPM Consulting Technician	UNCLASSIFIED	Leak Limit of 500
COKE	R226	1101	TAR TRANSFER PUMP (EAST)	02	Accessible	40 CFR 61 Subpart L	Pump	0	Standard Service	UNCLASSIFIED	FALSE	Light Liquid	FALSE	24-Oct-16	28-Mar-18	23-Nov-16	VIS	PPM Consulting Technician	UNCLASSIFIED	Leak Limit of 500
COKE	R226	1101	TAR TRANSFER PUMP (EAST)	02	Accessible	40 CFR 61 Subpart L	Pump	0	Standard Service	UNCLASSIFIED	FALSE	Light Liquid	FALSE	24-Oct-16	21-May-18	23-Nov-16	VIS	PPM Consulting Technician	UNCLASSIFIED	Leak Limit of 500
COKE	R226	1101	TAR TRANSFER PUMP (EAST)	02	Accessible	40 CFR 61 Subpart L	Pump	0	Standard Service	UNCLASSIFIED	FALSE	Light Liquid	FALSE	24-Oct-16	30-May-18	23-Nov-16	VIS	PPM Consulting Technician	UNCLASSIFIED	Leak Limit of 500
COKE	R227	1100	TAR TRANSFER PUMP (WEST)	02	Accessible	40 CFR 61 Subpart L	Pump	0	Standard Service	UNCLASSIFIED	FALSE	Light Liquid	FALSE	24-Oct-16	29-Jan-18	23-Nov-16	VIS	PPM Consulting Technician	UNCLASSIFIED	Leak Limit of 500
COKE	R227	1100	TAR TRANSFER PUMP (WEST)	02	Accessible	40 CFR 61 Subpart L	Pump	0	Standard Service	UNCLASSIFIED	FALSE	Light Liquid	FALSE	24-Oct-16	06-Feb-18	23-Nov-16	VIS	PPM Consulting Technician	UNCLASSIFIED	Leak Limit of 500
COKE	R227	1100	TAR TRANSFER PUMP (WEST)	02	Accessible	40 CFR 61 Subpart L	Pump	0	Standard Service	UNCLASSIFIED	FALSE	Light Liquid	FALSE	24-Oct-16	21-Feb-18	23-Nov-16	VIS	PPM Consulting Technician	UNCLASSIFIED	Leak Limit of 500
COKE	R227	1100	TAR TRANSFER PUMP (WEST)	02	Accessible	40 CFR 61 Subpart L	Pump	0	Standard Service	UNCLASSIFIED	FALSE	Light Liquid	FALSE	24-Oct-16	26-Feb-18	23-Nov-16	VIS	PPM Consulting Technician	UNCLASSIFIED	Leak Limit of 500
COKE	R227	1100	TAR TRANSFER PUMP (WEST)	02	Accessible	40 CFR 61 Subpart L	Pump	0	Standard Service	UNCLASSIFIED	FALSE	Light Liquid	FALSE	24-Oct-16	05-Mar-18	23-Nov-16	VIS	PPM Consulting Technician	UNCLASSIFIED	Leak Limit of 500
COKE	R227	1100	TAR TRANSFER PUMP (WEST)	02	Accessible	40 CFR 61 Subpart L	Pump	0	Standard Service	UNCLASSIFIED	FALSE	Light Liquid	FALSE	24-Oct-16	03-Jan-18	23-Nov-16	VIS	PPM Consulting Technician	UNCLASSIFIED	Leak Limit of 500
COKE	R227	1100	TAR TRANSFER PUMP (WEST)	02	Accessible	40 CFR 61 Subpart L	Pump	0	Standard Service	UNCLASSIFIED	FALSE	Light Liquid	FALSE	24-Oct-16	09-Jan-18	23-Nov-16	VIS	PPM Consulting Technician	UNCLASSIFIED	Leak Limit of 500
COKE	R227	1100	TAR TRANSFER PUMP (WEST)	02	Accessible	40 CFR 61 Subpart L	Pump	0	Standard Service	UNCLASSIFIED	FALSE	Light Liquid	FALSE	24-Oct-16	15-Jan-18	23-Nov-16	VIS	PPM Consulting Technician	UNCLASSIFIED	Leak Limit of 500
COKE	R227	1100	TAR TRANSFER PUMP (WEST)	02	Accessible	40 CFR 61 Subpart L	Pump	0	Standard Service	UNCLASSIFIED	FALSE	Light Liquid	FALSE	24-Oct-16	19-Mar-18	23-Nov-16	VIS	PPM Consulting Technician	UNCLASSIFIED	Leak Limit of 500
COKE	R227	1100	TAR TRANSFER PUMP (WEST)	02	Accessible	40 CFR 61 Subpart L	Pump	0	Standard Service	UNCLASSIFIED	FALSE	Light Liquid	FALSE	24-Oct-16	28-Mar-18	23-Nov-16	VIS	PPM Consulting Technician	UNCLASSIFIED	Leak Limit of 500
COKE	R227	1100	TAR TRANSFER PUMP (WEST)	02	Accessible	40 CFR 61 Subpart L	Pump	0	Standard Service	UNCLASSIFIED	FALSE	Light Liquid	FALSE	24-Oct-16	04-Apr-18	23-Nov-16	VIS	PPM Consulting Technician	UNCLASSIFIED	Leak Limit of 500
COKE	R227	1100	TAR TRANSFER PUMP (WEST)	02	Accessible	40 CFR 61 Subpart L	Pump	0	Standard Service	UNCLASSIFIED	FALSE	Light Liquid	FALSE	24-Oct-16	09-Apr-18	23-Nov-16	VIS	PPM Consulting Technician	UNCLASSIFIED	Leak Limit of 500
COKE	R227	1100	TAR TRANSFER PUMP (WEST)	02	Accessible	40 CFR 61 Subpart L	Pump	0	Standard Service	UNCLASSIFIED	FALSE	Light Liquid	FALSE	24-Oct-16	17-Apr-18	23-Nov-16	VIS	PPM Consulting Technician	UNCLASSIFIED	Leak Limit of 500
COKE	R227	1100	TAR TRANSFER PUMP (WEST)	02	Accessible	40 CFR 61 Subpart L	Pump	0	Standard Service	UNCLASSIFIED	FALSE	Light Liquid	FALSE	24-Oct-16	02-May-18	23-Nov-16	VIS	PPM Consulting Technician	UNCLASSIFIED	Leak Limit of 500
COKE	R227	1100	TAR TRANSFER PUMP (WEST)	02	Accessible	40 CFR 61 Subpart L	Pump	0	Standard Service	UNCLASSIFIED	FALSE	Light Liquid	FALSE	24-Oct-16	16-May-18	23-Nov-16	VIS	PPM Consulting Technician	UNCLASSIFIED	Leak Limit of 500
COKE	R227	1100	TAR TRANSFER PUMP (WEST)	02	Accessible	40 CFR 61 Subpart L	Pump	0	Standard Service	UNCLASSIFIED	FALSE	Light Liquid	FALSE	24-Oct-16	21-May-18	23-Nov-16	VIS	PPM Consulting Technician	UNCLASSIFIED	Leak Limit of 500
COKE	R227	1100	TAR TRANSFER PUMP (WEST)	02	Accessible	40 CFR 61 Subpart L	Pump	0	Standard Service	UNCLASSIFIED	FALSE	Light Liquid	FALSE	24-Oct-16	30-May-18	23-Nov-16	VIS	PPM Consulting Technician	UNCLASSIFIED	Leak Limit of 500
COKE	R374	1281	EAST TAR LOADING PUMP	00	Accessible	40 CFR 61 Subpart L	Pump	0	Standard Service	UNCLASSIFIED	FALSE	Light Liquid	FALSE	24-Oct-16	03-Jan-18	23-Nov-16	VIS	PPM Consulting Technician	UNCLASSIFIED	Leak Limit of 500
COKE	R374	1281	EAST TAR LOADING PUMP	00	Accessible	40 CFR 61 Subpart L	Pump	0	Standard Service	UNCLASSIFIED	FALSE	Light Liquid	FALSE	24-Oct-16	26-Feb-18	23-Nov-16	VIS	PPM Consulting Technician	UNCLASSIFIED	Leak Limit of 500
COKE	R374	1281	EAST TAR LOADING PUMP	00	Accessible	40 CFR 61 Subpart L	Pump	0	Standard Service	UNCLASSIFIED	FALSE	Light Liquid	FALSE	24-Oct-16	05-Mar-18	23-Nov-16	VIS	PPM Consulting Technician	UNCLASSIFIED	Leak Limit of 500
COKE	R374	1281	EAST TAR LOADING PUMP	00	Accessible	40 CFR 61 Subpart L	Pump	0	Standard Service	UNCLASSIFIED	FALSE	Light Liquid	FALSE	24-Oct-16	19-Mar-18	23-Nov-16	VIS	PPM Consulting Technician	UNCLASSIFIED	Leak Limit of 500
COKE	R374	1281	EAST TAR LOADING PUMP	00	Accessible	40 CFR 61 Subpart L	Pump	0	Standard Service	UNCLASSIFIED	FALSE	Light Liquid	FALSE	24-Oct-16	28-Mar-18	23-Nov-16	VIS	PPM Consulting Technician	UNCLASSIFIED	Leak Limit of 500
COKE	R374	1281	EAST TAR LOADING PUMP	00	Accessible	40 CFR 61 Subpart L	Pump	0	Standard Service	UNCLASSIFIED	FALSE	Light Liquid	FALSE	24-Oct-16	04-Apr-18	23-Nov-16	VIS	PPM Consulting Technician	UNCLASSIFIED	Leak Limit of 500
COKE	R374	1281	EAST TAR LOADING PUMP	00	Accessible	40 CFR 61 Subpart L	Pump	0	Standard Service	UNCLASSIFIED	FALSE	Light Liquid	FALSE	24-Oct-16	30-May-18	23-Nov-16	VIS	PPM Consulting Technician	UNCLASSIFIED	Leak Limit of 500
COKE	R374	1281	EAST TAR LOADING PUMP	00	Accessible	40 CFR 61 Subpart L	Pump	0	Standard Service	UNCLASSIFIED	FALSE	Light Liquid	FALSE	24-Oct-16	09-Jan-18	23-Nov-16	VIS	PPM Consulting Technician	UNCLASSIFIED	Leak Limit of 500
COKE	R374	1281	EAST TAR LOADING PUMP	00	Accessible	40 CFR 61 Subpart L	Pump	0	Standard Service	UNCLASSIFIED	FALSE	Light Liquid	FALSE	24-Oct-16	15-Jan-18	23-Nov-16	VIS	PPM Consulting Technician	UNCLASSIFIED	Leak Limit of 500
COKE	R374	1281	EAST TAR LOADING PUMP	00	Accessible	40 CFR 61 Subpart L	Pump	0	Standard Service	UNCLASSIFIED	FALSE	Light Liquid	FALSE	24-Oct-16	29-Jan-18	23-Nov-16	VIS	PPM Consulting Technician	UNCLASSIFIED	Leak Limit of 500
COKE	R374	1281	EAST TAR LOADING PUMP	00	Accessible	40 CFR 61 Subpart L	Pump	0	Standard Service	UNCLASSIFIED	FALSE	Light Liquid	FALSE	24-Oct-16	06-Feb-18	23-Nov-16	VIS	PPM Consulting Technician	UNCLASSIFIED	Leak Limit of 500
COKE	R374	1281	EAST TAR LOADING PUMP	00	Accessible	40 CFR 61 Subpart L	Pump	0	Standard Service	UNCLASSIFIED	FALSE	Light Liquid	FALSE	24-Oct-16	21-Feb-18	23-Nov-16	VIS	PPM Consulting Technician	UNCLASSIFIED	Leak Limit of 500
COKE	R374	1281	EAST TAR LOADING PUMP	00	Accessible	40 CFR 61 Subpart L	Pump	0	Standard Service	UNCLASSIFIED	FALSE	Light Liquid	FALSE	24-Oct-16	09-Apr-18	23-Nov-16	VIS	PPM Consulting Technician	UNCLASSIFIED	Leak Limit of 500
COKE	R374	1281	EAST TAR LOADING PUMP	00	Accessible	40 CFR 61 Subpart L	Pump	0	Standard Service	UNCLASSIFIED	FALSE	Light Liquid	FALSE	24-Oct-16	17-Apr-18	23-Nov-16	VIS	PPM Consulting Technician	UNCLASSIFIED	Leak Limit of 500
COKE	R374	1281	EAST TAR LOADING PUMP	00	Accessible	40 CFR 61 Subpart L	Pump	0	Standard Service	UNCLASSIFIED	FALSE	Light Liquid	FALSE	24-Oct-16	02-May-18	23-Nov-16	VIS	PPM Consulting Technician	UNCLASSIFIED	Leak Limit of 500
COKE	R374	1281	EAST TAR LOADING PUMP	00	Accessible	40 CFR 61 Subpart L	Pump	0	Standard Service	UNCLASSIFIED	FALSE	Light Liquid	FALSE	24-Oct-16	16-May-18	23-Nov-16	VIS	PPM Consulting Technician	UNCLASSIFIED	Leak Limit of 500
COKE	R374	1281	EAST TAR LOADING PUMP	00	Accessible	40 CFR 61 Subpart L	Pump	0	Standard Service	UNCLASSIFIED	FALSE	Light Liquid	FALSE	24-Oct-16	21-May-18	23-Nov-16	VIS	PPM Consulting Technician	UNCLASSIFIED	Leak Limit of 500
COKE	R374	1281	EAST TAR LOADING PUMP	00	Accessible	40 CFR 61 Subpart L	Pump	0	Standard Service	UNCLASSIFIED	FALSE	Light Liquid	FALSE	24-Oct-16	30-May-18	23-Nov-16	VIS	PPM Consulting Technician	UNCLASSIFIED	Leak Limit of 500
COKE	R386	1288	TAR TO FINAL COOLER PUMP (WEST)	00	Accessible	40 CFR 61 Subpart L	Pump	0	Standard Service	UNCLASSIFIED	FALSE	Light Liquid	FALSE	24-Oct-16	03-Jan-18	23-Nov-16	VIS	PPM Consulting Technician	UNCLASSIFIED	Leak Limit of 500
COKE	R386	1288	TAR TO FINAL COOLER PUMP (WEST)	00	Accessible	40 CFR 61 Subpart L	Pump	0	Standard Service	UNCLASSIFIED	FALSE	Light Liquid	FALSE	24-Oct-16	09-Jan-18	23-Nov-16	VIS	PPM Consulting Technician	UNCLASSIFIED	Leak Limit of 500
COKE	R386	1288	TAR TO FINAL COOLER PUMP (WEST)	00	Accessible	40 CFR 61 Subpart L	Pump	0	Standard Service	UNCLASSIFIED	FALSE	Light Liquid	FALSE	24-Oct-16	15-Jan-18	23-Nov-16	VIS	PPM Consulting Technician	UNCLASSIFIED	Leak Limit of 500
COKE	R386	1288	TAR TO FINAL COOLER PUMP (WEST)	00	Accessible	40 CFR 61 Subpart L	Pump	0	Standard Service	UNCLASSIFIED	FALSE	Light Liquid	FALSE	24-Oct-16	29-Jan-18	23-Nov-16	VIS	PPM Consulting Technician	UNCLASSIFIED	Leak Limit of 500
COKE	R386	1288	TAR TO FINAL COOLER PUMP (WEST)	00	Accessible	40 CFR 61 Subpart L	Pump	0	Standard Service	UNCLASSIFIED	FALSE	Light Liquid	FALSE	24-Oct-16	28-Mar-18	23-Nov-16	VIS	PPM Consulting Technician	UNCLASSIFIED	Leak Limit of 500
COKE	R386	1288	TAR TO FINAL COOLER PUMP (WEST)	00	Accessible	40 CFR 61 Subpart L	Pump	0	Standard Service	UNCLASSIFIED	FALSE	Light Liquid	FALSE	24-Oct-16	04-Apr-18	23-Nov-16	VIS	PPM Consulting Technician	UNCLASSIFIED	Leak Limit of 500
COKE	R386	1288	TAR TO FINAL COOLER PUMP (WEST)	00	Accessible	40 CFR 61 Subpart L	Pump	0	Standard Service	UNCLASSIFIED	FALSE	Light Liquid	FALSE	24-Oct-16	09-Apr-18	23-Nov-16	VIS	PPM Consulting Technician	UNCLASSIFIED	Leak Limit of 500
COKE	R386	1288	TAR TO FINAL COOLER PUMP (WEST)	00	Accessible	40 CFR 61 Subpart L	Pump	0	Standard Service	UNCLASSIFIED	FALSE	Light Liquid	FALSE	24-Oct-16	17-Apr-18	23-Nov-16	VIS	PPM Consulting Technician	UNCLASSIFIED	Leak Limit of 500
COKE	R386	1288	TAR TO FINAL COOLER PUMP (WEST)	00	Accessible	40 CFR 61 Subpart L	Pump	0	Standard Service	UNCLASSIFIED	FALSE	Light Liquid	FALSE	24-Oct-16	02-May-18	23-Nov-16	VIS	PPM Consulting Technician	UNCLASSIFIED	Leak Limit of 500
COKE	R386	1288	TAR TO FINAL COOLER PUMP (WEST)	00	Accessible	40 CFR 61 Subpart L	Pump	0	Standard Service	UNCLASSIFIED	FALSE	Light Liquid	FALSE	24-Oct-16	06-Feb-18	23-Nov-16	VIS	PPM Consulting Technician	UNCLASSIFIED	Leak Limit of 500
COKE	R386	1288	TAR TO FINAL COOLER PUMP (WEST)	00	Accessible	40 CFR 61 Subpart L	Pump	0	Standard Service	UNCLASSIFIED	FALSE	Light Liquid	FALSE	24-Oct-16	21-Feb-18	23-Nov-16	VIS	PPM Consulting Technician	UNCLASSIFIED	Leak Limit of 500
COKE	R386	1288	TAR TO FINAL COOLER PUMP (WEST)	00	Accessible	40 CFR 61 Subpart L	Pump	0	Standard Service	UNCLASSIFIED	FALSE	Light Liquid	FALSE	24-Oct-16	26-Feb-18	23-Nov-16	VIS	PPM Consulting Technician	UNCLASSIFIED	Leak Limit of 500
COKE	R386	1288	TAR TO FINAL COOLER PUMP (WEST)	00	Accessible	40 CFR 61 Subpart L	Pump	0	Standard Service	UNCLASSIFIED	FALSE	Light Liquid	FALSE	24-Oct-16	05-Mar-18	23-Nov-16	VIS	PPM Consulting Technician	UNCLASSIFIED	Leak Limit of 500
COKE	R386	1288	TAR TO FINAL COOLER PUMP (WEST)	00	Accessible	40 CFR 61 Subpart L	Pump	0	Standard Service	UNCLASSIFIED	FALSE	Light Liquid	FALSE	24-Oct-16	19-Mar-18	23-Nov-16	VIS	PPM Consulting Technician	UNCLASSIFIED	Leak Limit of 500
COKE	R386	1288	TAR TO FINAL COOLER PUMP (WEST)	00	Accessible	40 CFR 61 Subpart L	Pump	0	Standard Service	UNCLASSIFIED	FALSE	Light Liquid	FALSE	24-Oct-16	16-May-18	23-Nov-16	VIS	PPM Consulting Technician	UNCLASSIFIED	Leak Limit of 500
COKE	R386	1288	TAR TO FINAL COOLER PUMP (WEST)	00	Accessible	40 CFR 61 Subpart L	Pump	0	Standard Service	UNCLASSIFIED	FALSE	Light Liquid	FALSE	24-Oct-16	21-May-18	23-Nov-16	VIS	PPM Consulting Technician	UNCLASSIFIED	Leak Limit of 500
COKE	R386	1288	TAR TO FINAL COOLER PUMP (WEST)	00	Accessible	40 CFR 61 Subpart L	Pump	0	Standard Service	UNCLASSIFIED	FALSE	Light Liquid	FALSE	24-Oct-16	30-May-18	23-Nov-16	VIS	PPM Consulting Technician	UNCLASSIFIED	Leak Limit of 500
COKE	R389	1289	TAR TO FINAL COOLER PUMP (EAST)	00	Accessible	40 CFR 61 Subpart L	Pump	0	Standard Service	UNCLASSIFIED	FALSE	Light Liquid	FALSE	24-Oct-16	15-Jan-18	23-Nov-16	VIS	PPM Consulting Technician	UNCLASSIFIED	Leak Limit of 500
COKE	R389	1289	TAR TO FINAL COOLER PUMP (EAST)	00	Accessible	40 CFR 61 Subpart L	Pump	0	Standard Service	UNCLASSIFIED	FALSE	Light Liquid	FALSE	24-Oct-16	29-Jan-18	23-Nov-16	VIS	PPM Consulting Technician	UNCLASSIFIED	Leak Limit of 500
COKE	R389	1289	TAR TO FINAL COOLER PUMP (EAST)	00	Accessible	40 CFR 61 Subpart L	Pump	0	Standard Service	UNCLASSIFIED	FALSE	Light Liquid	FALSE	24-Oct-16	06-Feb-18	23-Nov-16	VIS	PPM Consulting Technician	UNCLASSIFIED	Leak Limit of 500
COKE	R389	1289	TAR TO FINAL COOLER PUMP (EAST)	00	Accessible	40 CFR 61 Subpart L	Pump	0	Standard Service	UNCLASSIFIED	FALSE	Light Liquid	FALSE	24-Oct-16	21-Feb-18	23-Nov-16	VIS	PPM Consulting Technician	UNCLASSIFIED	Leak Limit of 500
COKE	R389	1289	TAR TO FINAL COOLER PUMP (EAST)	00	Accessible	40 CFR 61 Subpart L	Pump	0	Standard Service	UNCLASSIFIED	FALSE	Light Liquid	FALSE	24-Oct-16	26-Feb-18	23-Nov-16	VIS	PPM Consulting Technician	UNCLASSIFIED	Leak Limit of 500
COKE	R389	1289	TAR TO FINAL COOLER PUMP (EAST)	00	Accessible	40 CFR 61 Subpart L	Pump	0	Standard Service	UNCLASSIFIED	FALSE	Light Liquid	FALSE	24-Oct-16	17-Apr-18	23-Nov-16	VIS	PPM Consulting Technician	UNCLASSIFIED	Leak Limit of 500
COKE	R389	1289	TAR TO FINAL COOLER PUMP (EAST)	00	Accessible	40 CFR 61 Subpart L	Pump	0	Standard Service	UNCLASSIFIED	FALSE	Light Liquid	FALSE	24-Oct-16	02-May-18	23-Nov-16	VIS	PPM Consulting Technician	UNCLASSIFIED	Leak Limit of 500
COKE	R389	1289	TAR TO FINAL COOLER PUMP (EAST)	00	Accessible	40 CFR 61 Subpart L	Pump	0	Standard Service	UNCLASSIFIED	FALSE	Light Liquid	FALSE	24-Oct-16	16-May-18	23-Nov-16	VIS	PPM Consulting Technician	UNCLASSIFIED	Leak Limit of 500
COKE	R389	1289	TAR TO FINAL COOLER PUMP (EAST)	00	Accessible	40 CFR 61 Subpart L	Pump	0	Standard Service	UNCLASSIFIED	FALSE	Light Liquid	FALSE	24-Oct-16	21-May-18	23-Nov-16	VIS	PPM Consulting Technician	UNCLASSIFIED	Leak Limit of 500
COKE	R389	1289	TAR TO FINAL COOLER PUMP (EAST)	00	Accessible	40 CFR 61 Subpart L	Pump	0	Standard Service	UNCLASSIFIED	FALSE	Light Liquid	FALSE	24-Oct-16	30-May-18	23-Nov-16	VIS	PPM Consulting Technician	UNCLASSIFIED	Leak Limit of 500
COKE	R389	1289	TAR TO FINAL COOLER PUMP (EAST)	00	Accessible	40 CFR 61 Subpart L	Pump	0	Standard Service	UNCLASSIFIED	FALSE	Light Liquid	FALSE	24-Oct-16	03-Jan-18	23-Nov-16	VIS	PPM Consulting Technician	UNCLASSIFIED	Leak Limit of 500
COKE	R389	1289	TAR TO FINAL COOLER PUMP (EAST)	00	Accessible	40 CFR 61 Subpart L	Pump	0	Standard Service	UNCLASSIFIED	FALSE	Light Liquid	FALSE	24-Oct-16	09-Jan-18	23-Nov-16	VIS	PPM Consulting Technician	UNCLASSIFIED	Leak Limit of 500
COKE	R389	1289	TAR TO FINAL COOLER PUMP (EAST)	00	Accessible	40 CFR 61 Subpart L	Pump	0	Standard Service	UNCLASSIFIED	FALSE	Light Liquid	FALSE	24-Oct-16	05-Mar-18	23-Nov-16	VIS	PPM Consulting Technician	UNCLASSIFIED	Leak Limit of 500
COKE	R389	1289	TAR TO FINAL COOLER PUMP (EAST)	00	Accessible	40 CFR 61 Subpart L	Pump	0	Standard Service	UNCLASSIFIED	FALSE	Light Liquid	FALSE	24-Oct-16	19-Mar-18	23-Nov-16	VIS	PPM Consulting Technician	UNCLASSIFIED	Leak Limit of 500
COKE	R389	1289	TAR TO FINAL COOLER PUMP (EAST)	00	Accessible	40 CFR 61 Subpart L	Pump	0	Standard Service	UNCLASSIFIED	FALSE	Light Liquid	FALSE	24-Oct-16	28-Mar-18	23-Nov-16	VIS	PPM Consulting Technician	UNCLASSIFIED	Leak Limit of 500
COKE	R389	1289	TAR TO FINAL COOLER PUMP (EAST)	00	Accessible	40 CFR 61 Subpart L	Pump	0	Standard Service	UNCLASSIFIED	FALSE	Light Liquid	FALSE	24-Oct-16	04-Apr-18	23-Nov-16	VIS	PPM Consulting Technician	UNCLASSIFIED	Leak Limit of 500
COKE	R389	1289	TAR TO FINAL COOLER PUMP (EAST)	00	Accessible	40 CFR 61 Subpart L	Pump	0	Standard Service	UNCLASSIFIED	FALSE	Light Liquid	FALSE	24-Oct-16	09-Apr-18	23-Nov-16	VIS	PPM Consulting Technician	UNCLASSIFIED	Leak Limit of 500

UNIT_CODE	TAG_ NUMBER	ROUTE	LOCATION	LEVEL	ACCESS_DESC	GROUP_DESC	EQUITYPE DESC	SIZE	CONFIG_DESC	PRODUCT_DESC	CLOSED_ VENT_SYSTEM	SERVICE_DESC	UNDER_300_ HOURS_SERVICE	DATE_ADDED	DATE_INSPECTED	DATE_IN_SERVICE	INSPTYPE _CODE	TECH_DESC	INSTRUM_DESC	LEAKLIM_DESC
COKE	R416	1427	T-101 EXCESS LIQUOR STORAGE TANK PUMPS (EAST)	00	Accessible	40 CFR 61 Subpart L	Pump	0	Standard Service	UNCLASSIFIED	FALSE	Light Liquid	FALSE	24-Oct-16	21-Feb-18	23-Nov-16	VIS	PPM Consulting Technician	UNCLASSIFIED	Leak Limit of 500
COKE	R416	1427	T-101 EXCESS LIQUOR STORAGE TANK PUMPS (EAST)	00	Accessible	40 CFR 61 Subpart L	Pump	0	Standard Service	UNCLASSIFIED	FALSE	Light Liquid	FALSE	24-Oct-16	26-Feb-18	23-Nov-16	VIS	PPM Consulting Technician	UNCLASSIFIED	Leak Limit of 500
COKE	R416	1427	T-101 EXCESS LIQUOR STORAGE TANK PUMPS (EAST)	00	Accessible	40 CFR 61 Subpart L	Pump	0	Standard Service	UNCLASSIFIED	FALSE	Light Liquid	FALSE	24-Oct-16	05-Mar-18	23-Nov-16	VIS	PPM Consulting Technician	UNCLASSIFIED	Leak Limit of 500
COKE	R416	1427	T-101 EXCESS LIQUOR STORAGE TANK PUMPS (EAST)	00	Accessible	40 CFR 61 Subpart L	Pump	0	Standard Service	UNCLASSIFIED	FALSE	Light Liquid	FALSE	24-Oct-16	19-Mar-18	23-Nov-16	VIS	PPM Consulting Technician	UNCLASSIFIED	Leak Limit of 500
COKE	R416	1427	T-101 EXCESS LIQUOR STORAGE TANK PUMPS (EAST)	00	Accessible	40 CFR 61 Subpart L	Pump	0	Standard Service	UNCLASSIFIED	FALSE	Light Liquid	FALSE	24-Oct-16	04-Apr-18	23-Nov-16	VIS	PPM Consulting Technician	UNCLASSIFIED	Leak Limit of 500
COKE	R416	1427	T-101 EXCESS LIQUOR STORAGE TANK PUMPS (EAST)	00	Accessible	40 CFR 61 Subpart L	Pump	0	Standard Service	UNCLASSIFIED	FALSE	Light Liquid	FALSE	24-Oct-16	30-May-18	23-Nov-16	VIS	PPM Consulting Technician	UNCLASSIFIED	Leak Limit of 500
COKE	R416	1427	T-101 EXCESS LIQUOR STORAGE TANK PUMPS (EAST)	00	Accessible	40 CFR 61 Subpart L	Pump	0	Standard Service	UNCLASSIFIED	FALSE	Light Liquid	FALSE	24-Oct-16	03-Jan-18	23-Nov-16	VIS	PPM Consulting Technician	UNCLASSIFIED	Leak Limit of 500
COKE	R416	1427	T-101 EXCESS LIQUOR STORAGE TANK PUMPS (EAST)	00	Accessible	40 CFR 61 Subpart L	Pump	0	Standard Service	UNCLASSIFIED	FALSE	Light Liquid	FALSE	24-Oct-16	09-Jan-18	23-Nov-16	VIS	PPM Consulting Technician	UNCLASSIFIED	Leak Limit of 500
COKE	R416	1427	T-101 EXCESS LIQUOR STORAGE TANK PUMPS (EAST)	00	Accessible	40 CFR 61 Subpart L	Pump	0	Standard Service	UNCLASSIFIED	FALSE	Light Liquid	FALSE	24-Oct-16	15-Jan-18	23-Nov-16	VIS	PPM Consulting Technician	UNCLASSIFIED	Leak Limit of 500
COKE	R416	1427	T-101 EXCESS LIQUOR STORAGE TANK PUMPS (EAST)	00	Accessible	40 CFR 61 Subpart L	Pump	0	Standard Service	UNCLASSIFIED	FALSE	Light Liquid	FALSE	24-Oct-16	29-Jan-18	23-Nov-16	VIS	PPM Consulting Technician	UNCLASSIFIED	Leak Limit of 500
COKE	R416	1427	T-101 EXCESS LIQUOR STORAGE TANK PUMPS (EAST)	00	Accessible	40 CFR 61 Subpart L	Pump	0	Standard Service	UNCLASSIFIED	FALSE	Light Liquid	FALSE	24-Oct-16	06-Feb-18	23-Nov-16	VIS	PPM Consulting Technician	UNCLASSIFIED	Leak Limit of 500
COKE	R416	1427	T-101 EXCESS LIQUOR STORAGE TANK PUMPS (EAST)	00	Accessible	40 CFR 61 Subpart L	Pump	0	Standard Service	UNCLASSIFIED	FALSE	Light Liquid	FALSE	24-Oct-16	09-Apr-18	23-Nov-16	VIS	PPM Consulting Technician	UNCLASSIFIED	Leak Limit of 500
COKE	R416	1427	T-101 EXCESS LIQUOR STORAGE TANK PUMPS (EAST)	00	Accessible	40 CFR 61 Subpart L	Pump	0	Standard Service	UNCLASSIFIED	FALSE	Light Liquid	FALSE	24-Oct-16	17-Apr-18	23-Nov-16	VIS	PPM Consulting Technician	UNCLASSIFIED	Leak Limit of 500
COKE	R416	1427	T-101 EXCESS LIQUOR STORAGE TANK PUMPS (EAST)	00	Accessible	40 CFR 61 Subpart L	Pump	0	Standard Service	UNCLASSIFIED	FALSE	Light Liquid	FALSE	24-Oct-16	02-May-18	23-Nov-16	VIS	PPM Consulting Technician	UNCLASSIFIED	Leak Limit of 500
COKE	R416	1427	T-101 EXCESS LIQUOR STORAGE TANK PUMPS (EAST)	00	Accessible	40 CFR 61 Subpart L	Pump	0	Standard Service	UNCLASSIFIED	FALSE	Light Liquid	FALSE	24-Oct-16	16-May-18	23-Nov-16	VIS	PPM Consulting Technician	UNCLASSIFIED	Leak Limit of 500
COKE	R416	1427	T-101 EXCESS LIQUOR STORAGE TANK PUMPS (EAST)	00	Accessible	40 CFR 61 Subpart L	Pump	0	Standard Service	UNCLASSIFIED	FALSE	Light Liquid	FALSE	24-Oct-16	21-May-18	23-Nov-16	VIS	PPM Consulting Technician	UNCLASSIFIED	Leak Limit of 500
COKE	R416	1427	T-101 EXCESS LIQUOR STORAGE TANK PUMPS (EAST)	00	Accessible	40 CFR 61 Subpart L	Pump	0	Standard Service	UNCLASSIFIED	FALSE	Light Liquid	FALSE	24-Oct-16	30-May-18	23-Nov-16	VIS	PPM Consulting Technician	UNCLASSIFIED	Leak Limit of 500
COKE	R422	1419	T-101 EXCESS LIQUOR STORAGE TANK PUMP (WEST) (EXCESS LIQUOR	04	Accessible	40 CFR 61 Subpart L	Pump	0	Standard Service	UNCLASSIFIED	FALSE	Light Liquid	FALSE	24-Oct-16	03-Jan-18	23-Nov-16	VIS	PPM Consulting Technician	UNCLASSIFIED	Leak Limit of 500
COKE	R422	1419	T-101 EXCESS LIQUOR STORAGE TANK PUMP (WEST) (EXCESS LIQUOR	04	Accessible	40 CFR 61 Subpart L	Pump	0	Standard Service	UNCLASSIFIED	FALSE	Light Liquid	FALSE	24-Oct-16	09-Jan-18	23-Nov-16	VIS	PPM Consulting Technician	UNCLASSIFIED	Leak Limit of 500
COKE	R422	1419	T-101 EXCESS LIQUOR STORAGE TANK PUMP (WEST) (EXCESS LIQUOR	04	Accessible	40 CFR 61 Subpart L	Pump	0	Standard Service	UNCLASSIFIED	FALSE	Light Liquid	FALSE	24-Oct-16	15-Jan-18	23-Nov-16	VIS	PPM Consulting Technician	UNCLASSIFIED	Leak Limit of 500
COKE	R422	1419	T-101 EXCESS LIQUOR STORAGE TANK PUMP (WEST) (EXCESS LIQUOR	04	Accessible	40 CFR 61 Subpart L	Pump	0	Standard Service	UNCLASSIFIED	FALSE	Light Liquid	FALSE	24-Oct-16	29-Jan-18	23-Nov-16	VIS	PPM Consulting Technician	UNCLASSIFIED	Leak Limit of 500
COKE	R422	1419	T-101 EXCESS LIQUOR STORAGE TANK PUMP (WEST) (EXCESS LIQUOR	04	Accessible	40 CFR 61 Subpart L	Pump	0	Standard Service	UNCLASSIFIED	FALSE	Light Liquid	FALSE	24-Oct-16	06-Feb-18	23-Nov-16	VIS	PPM Consulting Technician	UNCLASSIFIED	Leak Limit of 500
COKE	R422	1419	T-101 EXCESS LIQUOR STORAGE TANK PUMP (WEST) (EXCESS LIQUOR	04	Accessible	40 CFR 61 Subpart L	Pump	0	Standard Service	UNCLASSIFIED	FALSE	Light Liquid	FALSE	24-Oct-16	21-Feb-18	23-Nov-16	VIS	PPM Consulting Technician	UNCLASSIFIED	Leak Limit of 500
COKE	R422	1419	T-101 EXCESS LIQUOR STORAGE TANK PUMP (WEST) (EXCESS LIQUOR	04	Accessible	40 CFR 61 Subpart L	Pump	0	Standard Service	UNCLASSIFIED	FALSE	Light Liquid	FALSE	24-Oct-16	26-Feb-18	23-Nov-16	VIS	PPM Consulting Technician	UNCLASSIFIED	Leak Limit of 500
COKE	R422	1419	T-101 EXCESS LIQUOR STORAGE TANK PUMP (WEST) (EXCESS LIQUOR	04	Accessible	40 CFR 61 Subpart L	Pump	0	Standard Service	UNCLASSIFIED	FALSE	Light Liquid	FALSE	24-Oct-16	05-Mar-18	23-Nov-16	VIS	PPM Consulting Technician	UNCLASSIFIED	Leak Limit of 500
COKE	R422	1419	T-101 EXCESS LIQUOR STORAGE TANK PUMP (WEST) (EXCESS LIQUOR	04	Accessible	40 CFR 61 Subpart L	Pump	0	Standard Service	UNCLASSIFIED	FALSE	Light Liquid	FALSE	24-Oct-16	19-Mar-18	23-Nov-16	VIS	PPM Consulting Technician	UNCLASSIFIED	Leak Limit of 500
COKE	R422	1419	T-101 EXCESS LIQUOR STORAGE TANK PUMP (WEST) (EXCESS LIQUOR	04	Accessible	40 CFR 61 Subpart L	Pump	0	Standard Service	UNCLASSIFIED	FALSE	Light Liquid	FALSE	24-Oct-16	28-Mar-18	23-Nov-16	VIS	PPM Consulting Technician	UNCLASSIFIED	Leak Limit of 500
COKE	R422	1419	T-101 EXCESS LIQUOR STORAGE TANK PUMP (WEST) (EXCESS LIQUOR	04	Accessible	40 CFR 61 Subpart L	Pump	0	Standard Service	UNCLASSIFIED	FALSE	Light Liquid	FALSE	24-Oct-16	04-Apr-18	23-Nov-16	VIS	PPM Consulting Technician	UNCLASSIFIED	Leak Limit of 500
COKE	R422	1419	T-101 EXCESS LIQUOR STORAGE TANK PUMP (WEST) (EXCESS LIQUOR	04	Accessible	40 CFR 61 Subpart L	Pump	0	Standard Service	UNCLASSIFIED	FALSE	Light Liquid	FALSE	24-Oct-16	09-Apr-18	23-Nov-16	VIS	PPM Consulting Technician	UNCLASSIFIED	Leak Limit of 500
COKE	R422	1419	T-101 EXCESS LIQUOR STORAGE TANK PUMP (WEST) (EXCESS LIQUOR	04	Accessible	40 CFR 61 Subpart L	Pump	0	Standard Service	UNCLASSIFIED	FALSE	Light Liquid	FALSE	24-Oct-16	17-Apr-18	23-Nov-16	VIS	PPM Consulting Technician	UNCLASSIFIED	Leak Limit of 500
COKE	R422	1419	T-101 EXCESS LIQUOR STORAGE TANK PUMP (WEST) (EXCESS LIQUOR	04	Accessible	40 CFR 61 Subpart L	Pump	0	Standard Service	UNCLASSIFIED	FALSE	Light Liquid	FALSE	24-Oct-16	02-May-18	23-Nov-16	VIS	PPM Consulting Technician	UNCLASSIFIED	Leak Limit of 500
COKE	R422	1419	T-101 EXCESS LIQUOR STORAGE TANK PUMP (WEST) (EXCESS LIQUOR	04	Accessible	40 CFR 61 Subpart L	Pump	0	Standard Service	UNCLASSIFIED	FALSE	Light Liquid	FALSE	24-Oct-16	16-May-18	23-Nov-16	VIS	PPM Consulting Technician	UNCLASSIFIED	Leak Limit of 500
COKE	R422	1419	T-101 EXCESS LIQUOR STORAGE TANK PUMP (WEST) (EXCESS LIQUOR	04	Accessible	40 CFR 61 Subpart L	Pump	0	Standard Service	UNCLASSIFIED	FALSE	Light Liquid	FALSE	24-Oct-16	21-May-18	23-Nov-16	VIS	PPM Consulting Technician	UNCLASSIFIED	Leak Limit of 500
COKE	R422	1419	T-101 EXCESS LIQUOR STORAGE TANK PUMP (WEST) (EXCESS LIQUOR	04	Accessible	40 CFR 61 Subpart L	Pump	0	Standard Service	UNCLASSIFIED	FALSE	Light Liquid	FALSE	24-Oct-16	30-May-18	23-Nov-16	VIS	PPM Consulting Technician	UNCLASSIFIED	Leak Limit of 500
COKE	R429	1419	T-101 EXCESS LIQUOR STORAGE TANK TAR PUMP	02	Accessible	40 CFR 61 Subpart L	Pump	0	Standard Service	UNCLASSIFIED	FALSE	Light Liquid	FALSE	24-Oct-16	15-Jan-18	23-Nov-16	VIS	PPM Consulting Technician	UNCLASSIFIED	Leak Limit of 500
COKE	R429	1419	T-101 EXCESS LIQUOR STORAGE TANK TAR PUMP	02	Accessible	40 CFR 61 Subpart L	Pump	0	Standard Service	UNCLASSIFIED	FALSE	Light Liquid	FALSE	24-Oct-16	29-Jan-18	23-Nov-16	VIS	PPM Consulting Technician	UNCLASSIFIED	Leak Limit of 500
COKE	R429	1419	T-101 EXCESS LIQUOR STORAGE TANK TAR PUMP	02	Accessible	40 CFR 61 Subpart L	Pump	0	Standard Service	UNCLASSIFIED	FALSE	Light Liquid	FALSE	24-Oct-16	06-Feb-18	23-Nov-16	VIS	PPM Consulting Technician	UNCLASSIFIED	Leak Limit of 500
COKE	R429	1419	T-101 EXCESS LIQUOR STORAGE TANK TAR PUMP	02	Accessible	40 CFR 61 Subpart L	Pump	0	Standard Service	UNCLASSIFIED	FALSE	Light Liquid	FALSE	24-Oct-16	21-Feb-18	23-Nov-16	VIS	PPM Consulting Technician	UNCLASSIFIED	Leak Limit of 500
COKE	R429	1419	T-101 EXCESS LIQUOR STORAGE TANK TAR PUMP	02	Accessible	40 CFR 61 Subpart L	Pump	0	Standard Service	UNCLASSIFIED	FALSE	Light Liquid	FALSE	24-Oct-16	26-Feb-18	23-Nov-16	VIS	PPM Consulting Technician	UNCLASSIFIED	Leak Limit of 500
COKE	R429	1419	T-101 EXCESS LIQUOR STORAGE TANK TAR PUMP	02	Accessible	40 CFR 61 Subpart L	Pump	0	Standard Service	UNCLASSIFIED	FALSE	Light Liquid	FALSE	24-Oct-16	17-Apr-18	23-Nov-16	VIS	PPM Consulting Technician	UNCLASSIFIED	Leak Limit of 500
COKE	R429	1419	T-101 EXCESS LIQUOR STORAGE TANK TAR PUMP	02	Accessible	40 CFR 61 Subpart L	Pump	0	Standard Service	UNCLASSIFIED	FALSE	Light Liquid	FALSE	24-Oct-16	02-May-18	23-Nov-16	VIS	PPM Consulting Technician	UNCLASSIFIED	Leak Limit of 500
COKE	R429	1419	T-101 EXCESS LIQUOR STORAGE TANK TAR PUMP	02	Accessible	40 CFR 61 Subpart L	Pump	0	Standard Service	UNCLASSIFIED	FALSE	Light Liquid	FALSE	24-Oct-16	16-May-18	23-Nov-16	VIS	PPM Consulting Technician	UNCLASSIFIED	Leak Limit of 500
COKE	R429	1419	T-101 EXCESS LIQUOR STORAGE TANK TAR PUMP	02	Accessible	40 CFR 61 Subpart L	Pump	0	Standard Service	UNCLASSIFIED	FALSE	Light Liquid	FALSE	24-Oct-16	21-May-18	23-Nov-16	VIS	PPM Consulting Technician	UNCLASSIFIED	Leak Limit of 500
COKE	R429	1419	T-101 EXCESS LIQUOR STORAGE TANK TAR PUMP	02	Accessible	40 CFR 61 Subpart L	Pump	0	Standard Service	UNCLASSIFIED	FALSE	Light Liquid	FALSE	24-Oct-16	30-May-18	23-Nov-16	VIS	PPM Consulting Technician	UNCLASSIFIED	Leak Limit of 500
COKE	R429	1419	T-101 EXCESS LIQUOR STORAGE TANK TAR PUMP	02	Accessible	40 CFR 61 Subpart L	Pump	0	Standard Service	UNCLASSIFIED	FALSE	Light Liquid	FALSE	24-Oct-16	03-Jan-18	23-Nov-16	VIS	PPM Consulting Technician	UNCLASSIFIED	Leak Limit of 500
COKE	R429	1419	T-101 EXCESS LIQUOR STORAGE TANK TAR PUMP	02	Accessible	40 CFR 61 Subpart L	Pump	0	Standard Service	UNCLASSIFIED	FALSE	Light Liquid	FALSE	24-Oct-16	09-Jan-18	23-Nov-16	VIS	PPM Consulting Technician	UNCLASSIFIED	Leak Limit of 500
COKE	R429	1419	T-101 EXCESS LIQUOR STORAGE TANK TAR PUMP	02	Accessible	40 CFR 61 Subpart L	Pump	0	Standard Service	UNCLASSIFIED	FALSE	Light Liquid	FALSE	24-Oct-16	05-Mar-18	23-Nov-16	VIS	PPM Consulting Technician	UNCLASSIFIED	Leak Limit of 500
COKE	R429	1419	T-101 EXCESS LIQUOR STORAGE TANK TAR PUMP	02	Accessible	40 CFR 61 Subpart L	Pump	0	Standard Service	UNCLASSIFIED	FALSE	Light Liquid	FALSE	24-Oct-16	19-Mar-18	23-Nov-16	VIS	PPM Consulting Technician	UNCLASSIFIED	Leak Limit of 500
COKE	R429	1419	T-101 EXCESS LIQUOR STORAGE TANK TAR PUMP	02	Accessible	40 CFR 61 Subpart L	Pump	0	Standard Service	UNCLASSIFIED	FALSE	Light Liquid	FALSE	24-Oct-16	28-Mar-18	23-Nov-16	VIS	PPM Consulting Technician	UNCLASSIFIED	Leak Limit of 500
COKE	R429	1419	T-101 EXCESS LIQUOR STORAGE TANK TAR PUMP	02	Accessible	40 CFR 61 Subpart L	Pump	0	Standard Service	UNCLASSIFIED	FALSE	Light Liquid	FALSE	24-Oct-16	04-Apr-18	23-Nov-16	VIS	PPM Consulting Technician	UNCLASSIFIED	Leak Limit of 500
COKE	R429	1419	T-101 EXCESS LIQUOR STORAGE TANK TAR PUMP	02	Accessible	40 CFR 61 Subpart L	Pump	0	Standard Service	UNCLASSIFIED	FALSE	Light Liquid	FALSE	24-Oct-16	09-Apr-18	23-Nov-16	VIS	PPM Consulting Technician	UNCLASSIFIED	Leak Limit of 500
COKE	R45	330	PROCESS WATER PUMP @ PROCESS WATER DECANTER	04	Accessible	40 CFR 61 Subpart L	Pump	0	Standard Service	UNCLASSIFIED	FALSE	Light Liquid	FALSE	24-Oct-16	21-Feb-18	23-Nov-16	VIS	PPM Consulting Technician	UNCLASSIFIED	Leak Limit of 500
COKE	R45	330	PROCESS WATER PUMP @ PROCESS WATER DECANTER	04	Accessible	40 CFR 61 Subpart L	Pump	0	Standard Service	UNCLASSIFIED	FALSE	Light Liquid	FALSE	24-Oct-16	26-Feb-18	23-Nov-16	VIS	PPM Consulting Technician	UNCLASSIFIED	Leak Limit of 500
COKE	R45	330	PROCESS WATER PUMP @ PROCESS WATER DECANTER	04	Accessible	40 CFR 61 Subpart L	Pump	0	Standard Service	UNCLASSIFIED	FALSE	Light Liquid	FALSE	24-Oct-16	05-Mar-18	23-Nov-16	VIS	PPM Consulting Technician	UNCLASSIFIED	Leak Limit of 500
COKE	R45	330	PROCESS WATER PUMP @ PROCESS WATER DECANTER	04	Accessible	40 CFR 61 Subpart L	Pump	0	Standard Service	UNCLASSIFIED	FALSE	Light Liquid	FALSE	24-Oct-16	19-Mar-18	23-Nov-16	VIS	PPM Consulting Technician	UNCLASSIFIED	Leak Limit of 500
COKE	R45	330	PROCESS WATER PUMP @ PROCESS WATER DECANTER	04	Accessible	40 CFR 61 Subpart L	Pump	0	Standard Service	UNCLASSIFIED	FALSE	Light Liquid	FALSE	24-Oct-16	28-Mar-18	23-Nov-16	VIS	PPM Consulting Technician	UNCLASSIFIED	Leak Limit of 500
COKE	R45	330	PROCESS WATER PUMP @ PROCESS WATER DECANTER	04	Accessible	40 CFR 61 Subpart L	Pump	0	Standard Service	UNCLASSIFIED	FALSE	Light Liquid	FALSE	24-Oct-16	21-May-18	23-Nov-16	VIS	PPM Consulting Technician	UNCLASSIFIED	Leak Limit of 500
COKE	R45	330	PROCESS WATER PUMP @ PROCESS WATER DECANTER	04	Accessible	40 CFR 61 Subpart L	Pump	0	Standard Service	UNCLASSIFIED	FALSE	Light Liquid	FALSE	24-Oct-16	30-May-18	23-Nov-16	VIS	PPM Consulting Technician	UNCLASSIFIED	Leak Limit of 500
COKE	R45	330	PROCESS WATER PUMP @ PROCESS WATER DECANTER	04	Accessible	40 CFR 61 Subpart L	Pump	0	Standard Service	UNCLASSIFIED	FALSE	Light Liquid	FALSE	24-Oct-16	03-Jan-18	23-Nov-16	VIS	PPM Consulting Technician	UNCLASSIFIED	Leak Limit of 500
COKE	R45	330	PROCESS WATER PUMP @ PROCESS WATER DECANTER	04	Accessible	40 CFR 61 Subpart L	Pump	0	Standard Service	UNCLASSIFIED	FALSE	Light Liquid	FALSE	24-Oct-16	09-Jan-18	23-Nov-16	VIS	PPM Consulting Technician	UNCLASSIFIED	Leak Limit of 500
COKE	R45	330	PROCESS WATER PUMP @ PROCESS WATER DECANTER	04	Accessible	40 CFR 61 Subpart L	Pump	0	Standard Service	UNCLASSIFIED	FALSE	Light Liquid	FALSE	24-Oct-16	15-Jan-18	23-Nov-16	VIS	PPM Consulting Technician	UNCLASSIFIED	Leak Limit of 500
COKE	R45	330	PROCESS WATER PUMP @ PROCESS WATER DECANTER	04	Accessible	40 CFR 61 Subpart L	Pump	0	Standard Service	UNCLASSIFIED	FALSE	Light Liquid	FALSE	24-Oct-16	29-Jan-18	23-Nov-16	VIS	PPM Consulting Technician	UNCLASSIFIED	Leak Limit of 500
COKE	R45	330	PROCESS WATER PUMP @ PROCESS WATER DECANTER	04	Accessible	40 CFR 61 Subpart L	Pump	0	Standard Service	UNCLASSIFIED	FALSE	Light Liquid	FALSE	24-Oct-16	06-Feb-18	23-Nov-16	VIS	PPM Consulting Technician	UNCLASSIFIED	Leak Limit of 500
COKE	R45	330	PROCESS WATER PUMP @ PROCESS WATER DECANTER	04	Accessible	40 CFR 61 Subpart L	Pump	0	Standard Service	UNCLASSIFIED	FALSE	Light Liquid	FALSE	24-Oct-16	04-Apr-18	23-Nov-16	VIS	PPM Consulting Technician	UNCLASSIFIED	Leak Limit of 500
COKE	R45	330	PROCESS WATER PUMP @ PROCESS WATER DECANTER	04	Accessible	40 CFR 61 Subpart L	Pump	0	Standard Service	UNCLASSIFIED	FALSE	Light Liquid	FALSE	24-Oct-16	09-Apr-18	23-Nov-16	VIS	PPM Consulting Technician	UNCLASSIFIED	Leak Limit of 500
COKE	R45	330	PROCESS WATER PUMP @ PROCESS WATER DECANTER	04	Accessible	40 CFR 61 Subpart L	Pump	0	Standard Service	UNCLASSIFIED	FALSE	Light Liquid	FALSE	24-Oct-16	17-Apr-18	23-Nov-16	VIS	PPM Consulting Technician	UNCLASSIFIED	Leak Limit of 500
COKE	R45	330	PROCESS WATER PUMP @ PROCESS WATER DECANTER	04	Accessible	40 CFR 61 Subpart L	Pump	0	Standard Service	UNCLASSIFIED	FALSE	Light Liquid	FALSE	24-Oct-16	02-May-18	23-Nov-16	VIS	PPM Consulting Technician	UNCLASSIFIED	Leak Limit of 500
COKE	R45	330	PROCESS WATER PUMP @ PROCESS WATER DECANTER	04	Accessible	40 CFR 61 Subpart L	Pump	0	Standard Service	UNCLASSIFIED	FALSE	Light Liquid	FALSE	24-Oct-16	16-May-18	23-Nov-16	VIS	PPM Consulting Technician	UNCLASSIFIED	Leak Limit of 500
COKE	R458	1354	TAR DIKE SUBMERSIBLE PUMP	04	Accessible	40 CFR 61 Subpart L	Pump	0	Standard Service	UNCLASSIFIED	FALSE	Light Liquid	FALSE	24-Oct-16	03-Jan-18	23-Nov-16	VIS	PPM Consulting Technician	UNCLASSIFIED	Leak Limit of 500
COKE	R458	1354	TAR DIKE SUBMERSIBLE PUMP	04	Accessible	40 CFR 61 Subpart L	Pump	0	Standard Service	UNCLASSIFIED	FALSE	Light Liquid	FALSE	24-Oct-16	09-Jan-18	23-Nov-16	VIS	PPM Consulting Technician	UNCLASSIFIED	Leak Limit of 500
COKE	R458	1354	TAR DIKE SUBMERSIBLE PUMP	04	Accessible	40 CFR 61 Subpart L	Pump	0	Standard Service	UNCLASSIFIED	FALSE	Light Liquid	FALSE	24-Oct-16	15-Jan-18	23-Nov-16	VIS	PPM Consulting Technician	UNCLASSIFIED	Leak Limit of 500
COKE	R458	1354	TAR DIKE SUBMERSIBLE PUMP	04	Accessible	40 CFR 61 Subpart L	Pump	0	Standard Service	UNCLASSIFIED	FALSE	Light Liquid	FALSE	24-Oct-16	19-Mar-18	23-Nov-16	VIS	PPM Consulting Technician	UNCLASSIFIED	Leak Limit of 500
COKE	R458	1354	TAR DIKE SUBMERSIBLE PUMP	04	Accessible	40 CFR 61 Subpart L	Pump	0	Standard Service	UNCLASSIFIED	FALSE	Light Liquid	FALSE	24-Oct-16	28-Mar-18	23-Nov-16	VIS	PPM Consulting Technician	UNCLASSIFIED	Leak Limit of 500
COKE	R458	1354	TAR DIKE SUBMERSIBLE PUMP	04	Accessible	40 CFR 61 Subpart L	Pump	0	Standard Service	UNCLASSIFIED	FALSE	Light Liquid	FALSE	24-Oct-16	04-Apr-18	23-Nov-16	VIS	PPM Consulting Technician	UNCLASSIFIED	Leak Limit of 500
COKE	R458	1354	TAR DIKE SUBMERSIBLE PUMP	04	Accessible	40 CFR 61 Subpart L	Pump	0	Standard Service	UNCLASSIFIED	FALSE	Light Liquid	FALSE	24-Oct-16	09-Apr-18	23-Nov-16	VIS	PPM Consulting Technician	UNCLASSIFIED	Leak Limit of 500
COKE	R458	1354	TAR DIKE SUBMERSIBLE PUMP	04	Accessible	40 CFR 61 Subpart L	Pump	0	Standard Service	UNCLASSIFIED	FALSE	Light Liquid	FALSE	24-Oct-16	17-Apr-18	23-Nov-16	VIS	PPM Consulting Technician	UNCLASSIFIED	Leak Limit of 500

UNIT_CODE	TAG_ NUMBER	ROUTE	LOCATION	LEVEL	ACCESS_DESC	GROUP_DESC	EQUITYPE DESC	SIZE	CONFIG_DESC	PRODUCT_DESC	CLOSED_ VENT_SYSTEM	SERVICE_DESC	UNDER_300_ HOURS_SERVICE	DATE_ADDED	DATE_INSPECTED	DATE_IN_SERVICE	INSPTYPE _CODE	TECH_DESC	INSTRUM_DESC	LEAKLIM_DESC
COKE	R458	1354	TAR DIKE SUBMERSIBLE PUMP	04	Accessible	40 CFR 61 Subpart L	Pump	0	Standard Service	UNCLASSIFIED	FALSE	Light Liquid	FALSE	24-Oct-16	29-Jan-18	23-Nov-16	VIS	PPM Consulting Technician	UNCLASSIFIED	Leak Limit of 500
COKE	R458	1354	TAR DIKE SUBMERSIBLE PUMP	04	Accessible	40 CFR 61 Subpart L	Pump	0	Standard Service	UNCLASSIFIED	FALSE	Light Liquid	FALSE	24-Oct-16	06-Feb-18	23-Nov-16	VIS	PPM Consulting Technician	UNCLASSIFIED	Leak Limit of 500
COKE	R458	1354	TAR DIKE SUBMERSIBLE PUMP	04	Accessible	40 CFR 61 Subpart L	Pump	0	Standard Service	UNCLASSIFIED	FALSE	Light Liquid	FALSE	24-Oct-16	21-Feb-18	23-Nov-16	VIS	PPM Consulting Technician	UNCLASSIFIED	Leak Limit of 500
COKE	R458	1354	TAR DIKE SUBMERSIBLE PUMP	04	Accessible	40 CFR 61 Subpart L	Pump	0	Standard Service	UNCLASSIFIED	FALSE	Light Liquid	FALSE	24-Oct-16	26-Feb-18	23-Nov-16	VIS	PPM Consulting Technician	UNCLASSIFIED	Leak Limit of 500
COKE	R458	1354	TAR DIKE SUBMERSIBLE PUMP	04	Accessible	40 CFR 61 Subpart L	Pump	0	Standard Service	UNCLASSIFIED	FALSE	Light Liquid	FALSE	24-Oct-16	05-Mar-18	23-Nov-16	VIS	PPM Consulting Technician	UNCLASSIFIED	Leak Limit of 500
COKE	R458	1354	TAR DIKE SUBMERSIBLE PUMP	04	Accessible	40 CFR 61 Subpart L	Pump	0	Standard Service	UNCLASSIFIED	FALSE	Light Liquid	FALSE	24-Oct-16	02-May-18	23-Nov-16	VIS	PPM Consulting Technician	UNCLASSIFIED	Leak Limit of 500
COKE	R458	1354	TAR DIKE SUBMERSIBLE PUMP	04	Accessible	40 CFR 61 Subpart L	Pump	0	Standard Service	UNCLASSIFIED	FALSE	Light Liquid	FALSE	24-Oct-16	16-May-18	23-Nov-16	VIS	PPM Consulting Technician	UNCLASSIFIED	Leak Limit of 500
COKE	R458	1354	TAR DIKE SUBMERSIBLE PUMP	04	Accessible	40 CFR 61 Subpart L	Pump	0	Standard Service	UNCLASSIFIED	FALSE	Light Liquid	FALSE	24-Oct-16	21-May-18	23-Nov-16	VIS	PPM Consulting Technician	UNCLASSIFIED	Leak Limit of 500
COKE	R458	1354	TAR DIKE SUBMERSIBLE PUMP	04	Accessible	40 CFR 61 Subpart L	Pump	0	Standard Service	UNCLASSIFIED	FALSE	Light Liquid	FALSE	24-Oct-16	30-May-18	23-Nov-16	VIS	PPM Consulting Technician	UNCLASSIFIED	Leak Limit of 500
COKE	R46	332	PROCESS WATER PUMP @ PROCESS WATER DECANTER	04	Accessible	40 CFR 61 Subpart L	Pump	0	Standard Service	UNCLASSIFIED	FALSE	Light Liquid	FALSE	24-Oct-16	09-Jan-18	23-Nov-16	VIS	PPM Consulting Technician	UNCLASSIFIED	Leak Limit of 500
COKE	R46	332	PROCESS WATER PUMP @ PROCESS WATER DECANTER	04	Accessible	40 CFR 61 Subpart L	Pump	0	Standard Service	UNCLASSIFIED	FALSE	Light Liquid	FALSE	24-Oct-16	15-Jan-18	23-Nov-16	VIS	PPM Consulting Technician	UNCLASSIFIED	Leak Limit of 500
COKE	R46	332	PROCESS WATER PUMP @ PROCESS WATER DECANTER	04	Accessible	40 CFR 61 Subpart L	Pump	0	Standard Service	UNCLASSIFIED	FALSE	Light Liquid	FALSE	24-Oct-16	29-Jan-18	23-Nov-16	VIS	PPM Consulting Technician	UNCLASSIFIED	Leak Limit of 500
COKE	R46	332	PROCESS WATER PUMP @ PROCESS WATER DECANTER	04	Accessible	40 CFR 61 Subpart L	Pump	0	Standard Service	UNCLASSIFIED	FALSE	Light Liquid	FALSE	24-Oct-16	06-Feb-18	23-Nov-16	VIS	PPM Consulting Technician	UNCLASSIFIED	Leak Limit of 500
COKE	R46	332	PROCESS WATER PUMP @ PROCESS WATER DECANTER	04	Accessible	40 CFR 61 Subpart L	Pump	0	Standard Service	UNCLASSIFIED	FALSE	Light Liquid	FALSE	24-Oct-16	21-Feb-18	23-Nov-16	VIS	PPM Consulting Technician	UNCLASSIFIED	Leak Limit of 500
COKE	R46	332	PROCESS WATER PUMP @ PROCESS WATER DECANTER	04	Accessible	40 CFR 61 Subpart L	Pump	0	Standard Service	UNCLASSIFIED	FALSE	Light Liquid	FALSE	24-Oct-16	04-Apr-18	23-Nov-16	VIS	PPM Consulting Technician	UNCLASSIFIED	Leak Limit of 500
COKE	R46	332	PROCESS WATER PUMP @ PROCESS WATER DECANTER	04	Accessible	40 CFR 61 Subpart L	Pump	0	Standard Service	UNCLASSIFIED	FALSE	Light Liquid	FALSE	24-Oct-16	09-Apr-18	23-Nov-16	VIS	PPM Consulting Technician	UNCLASSIFIED	Leak Limit of 500
COKE	R46	332	PROCESS WATER PUMP @ PROCESS WATER DECANTER	04	Accessible	40 CFR 61 Subpart L	Pump	0	Standard Service	UNCLASSIFIED	FALSE	Light Liquid	FALSE	24-Oct-16	17-Apr-18	23-Nov-16	VIS	PPM Consulting Technician	UNCLASSIFIED	Leak Limit of 500
COKE	R46	332	PROCESS WATER PUMP @ PROCESS WATER DECANTER	04	Accessible	40 CFR 61 Subpart L	Pump	0	Standard Service	UNCLASSIFIED	FALSE	Light Liquid	FALSE	24-Oct-16	02-May-18	23-Nov-16	VIS	PPM Consulting Technician	UNCLASSIFIED	Leak Limit of 500
COKE	R46	332	PROCESS WATER PUMP @ PROCESS WATER DECANTER	04	Accessible	40 CFR 61 Subpart L	Pump	0	Standard Service	UNCLASSIFIED	FALSE	Light Liquid	FALSE	24-Oct-16	16-May-18	23-Nov-16	VIS	PPM Consulting Technician	UNCLASSIFIED	Leak Limit of 500
COKE	R46	332	PROCESS WATER PUMP @ PROCESS WATER DECANTER	04	Accessible	40 CFR 61 Subpart L	Pump	0	Standard Service	UNCLASSIFIED	FALSE	Light Liquid	FALSE	24-Oct-16	03-Jan-18	23-Nov-16	VIS	PPM Consulting Technician	UNCLASSIFIED	Leak Limit of 500
COKE	R46	332	PROCESS WATER PUMP @ PROCESS WATER DECANTER	04	Accessible	40 CFR 61 Subpart L	Pump	0	Standard Service	UNCLASSIFIED	FALSE	Light Liquid	FALSE	24-Oct-16	26-Feb-18	23-Nov-16	VIS	PPM Consulting Technician	UNCLASSIFIED	Leak Limit of 500
COKE	R46	332	PROCESS WATER PUMP @ PROCESS WATER DECANTER	04	Accessible	40 CFR 61 Subpart L	Pump	0	Standard Service	UNCLASSIFIED	FALSE	Light Liquid	FALSE	24-Oct-16	05-Mar-18	23-Nov-16	VIS	PPM Consulting Technician	UNCLASSIFIED	Leak Limit of 500
COKE	R46	332	PROCESS WATER PUMP @ PROCESS WATER DECANTER	04	Accessible	40 CFR 61 Subpart L	Pump	0	Standard Service	UNCLASSIFIED	FALSE	Light Liquid	FALSE	24-Oct-16	12-Mar-18	23-Nov-16	VIS	PPM Consulting Technician	UNCLASSIFIED	Leak Limit of 500
COKE	R46	332	PROCESS WATER PUMP @ PROCESS WATER DECANTER	04	Accessible	40 CFR 61 Subpart L	Pump	0	Standard Service	UNCLASSIFIED	FALSE	Light Liquid	FALSE	24-Oct-16	19-Mar-18	23-Nov-16	VIS	PPM Consulting Technician	UNCLASSIFIED	Leak Limit of 500
COKE	R46	332	PROCESS WATER PUMP @ PROCESS WATER DECANTER	04	Accessible	40 CFR 61 Subpart L	Pump	0	Standard Service	UNCLASSIFIED	FALSE	Light Liquid	FALSE	24-Oct-16	28-Mar-18	23-Nov-16	VIS	PPM Consulting Technician	UNCLASSIFIED	Leak Limit of 500
COKE	R46	332	PROCESS WATER PUMP @ PROCESS WATER DECANTER	04	Accessible	40 CFR 61 Subpart L	Pump	0	Standard Service	UNCLASSIFIED	FALSE	Light Liquid	FALSE	24-Oct-16	21-May-18	23-Nov-16	VIS	PPM Consulting Technician	UNCLASSIFIED	Leak Limit of 500
COKE	R46	332	PROCESS WATER PUMP @ PROCESS WATER DECANTER	04	Accessible	40 CFR 61 Subpart L	Pump	0	Standard Service	UNCLASSIFIED	FALSE	Light Liquid	FALSE	24-Oct-16	30-May-18	23-Nov-16	VIS	PPM Consulting Technician	UNCLASSIFIED	Leak Limit of 500
COKE	R461	1	TAR SEPARATOR SUMP PUMP	02	Accessible	40 CFR 61 Subpart L	Pump	0	Standard Service	UNCLASSIFIED	FALSE	Light Liquid	FALSE	24-Oct-16	03-Jan-18	23-Nov-16	VIS	PPM Consulting Technician	UNCLASSIFIED	Leak Limit of 500
COKE	R461	1	TAR SEPARATOR SUMP PUMP	02	Accessible	40 CFR 61 Subpart L	Pump	0	Standard Service	UNCLASSIFIED	FALSE	Light Liquid	FALSE	24-Oct-16	09-Jan-18	23-Nov-16	VIS	PPM Consulting Technician	UNCLASSIFIED	Leak Limit of 500
COKE	R461	1	TAR SEPARATOR SUMP PUMP	02	Accessible	40 CFR 61 Subpart L	Pump	0	Standard Service	UNCLASSIFIED	FALSE	Light Liquid	FALSE	24-Oct-16	15-Jan-18	23-Nov-16	VIS	PPM Consulting Technician	UNCLASSIFIED	Leak Limit of 500
COKE	R461	1	TAR SEPARATOR SUMP PUMP	02	Accessible	40 CFR 61 Subpart L	Pump	0	Standard Service	UNCLASSIFIED	FALSE	Light Liquid	FALSE	24-Oct-16	29-Jan-18	23-Nov-16	VIS	PPM Consulting Technician	UNCLASSIFIED	Leak Limit of 500
COKE	R461	1	TAR SEPARATOR SUMP PUMP	02	Accessible	40 CFR 61 Subpart L	Pump	0	Standard Service	UNCLASSIFIED	FALSE	Light Liquid	FALSE	24-Oct-16	06-Feb-18	23-Nov-16	VIS	PPM Consulting Technician	UNCLASSIFIED	Leak Limit of 500
COKE	R461	1	TAR SEPARATOR SUMP PUMP	02	Accessible	40 CFR 61 Subpart L	Pump	0	Standard Service	UNCLASSIFIED	FALSE	Light Liquid	FALSE	24-Oct-16	21-Feb-18	23-Nov-16	VIS	PPM Consulting Technician	UNCLASSIFIED	Leak Limit of 500
COKE	R461	1	TAR SEPARATOR SUMP PUMP	02	Accessible	40 CFR 61 Subpart L	Pump	0	Standard Service	UNCLASSIFIED	FALSE	Light Liquid	FALSE	24-Oct-16	26-Feb-18	23-Nov-16	VIS	PPM Consulting Technician	UNCLASSIFIED	Leak Limit of 500
COKE	R461	1	TAR SEPARATOR SUMP PUMP	02	Accessible	40 CFR 61 Subpart L	Pump	0	Standard Service	UNCLASSIFIED	FALSE	Light Liquid	FALSE	24-Oct-16	05-Mar-18	23-Nov-16	VIS	PPM Consulting Technician	UNCLASSIFIED	Leak Limit of 500
COKE	R461	1	TAR SEPARATOR SUMP PUMP	02	Accessible	40 CFR 61 Subpart L	Pump	0	Standard Service	UNCLASSIFIED	FALSE	Light Liquid	FALSE	24-Oct-16	02-May-18	23-Nov-16	VIS	PPM Consulting Technician	UNCLASSIFIED	Leak Limit of 500
COKE	R461	1	TAR SEPARATOR SUMP PUMP	02	Accessible	40 CFR 61 Subpart L	Pump	0	Standard Service	UNCLASSIFIED	FALSE	Light Liquid	FALSE	24-Oct-16	16-May-18	23-Nov-16	VIS	PPM Consulting Technician	UNCLASSIFIED	Leak Limit of 500
COKE	R461	1	TAR SEPARATOR SUMP PUMP	02	Accessible	40 CFR 61 Subpart L	Pump	0	Standard Service	UNCLASSIFIED	FALSE	Light Liquid	FALSE	24-Oct-16	21-May-18	23-Nov-16	VIS	PPM Consulting Technician	UNCLASSIFIED	Leak Limit of 500
COKE	R461	1	TAR SEPARATOR SUMP PUMP	02	Accessible	40 CFR 61 Subpart L	Pump	0	Standard Service	UNCLASSIFIED	FALSE	Light Liquid	FALSE	24-Oct-16	30-May-18	23-Nov-16	VIS	PPM Consulting Technician	UNCLASSIFIED	Leak Limit of 500
COKE	R461	1	TAR SEPARATOR SUMP PUMP	02	Accessible	40 CFR 61 Subpart L	Pump	0	Standard Service	UNCLASSIFIED	FALSE	Light Liquid	FALSE	24-Oct-16	19-Mar-18	23-Nov-16	VIS	PPM Consulting Technician	UNCLASSIFIED	Leak Limit of 500
COKE	R461	1	TAR SEPARATOR SUMP PUMP	02	Accessible	40 CFR 61 Subpart L	Pump	0	Standard Service	UNCLASSIFIED	FALSE	Light Liquid	FALSE	24-Oct-16	28-Mar-18	23-Nov-16	VIS	PPM Consulting Technician	UNCLASSIFIED	Leak Limit of 500
COKE	R461	1	TAR SEPARATOR SUMP PUMP	02	Accessible	40 CFR 61 Subpart L	Pump	0	Standard Service	UNCLASSIFIED	FALSE	Light Liquid	FALSE	24-Oct-16	04-Apr-18	23-Nov-16	VIS	PPM Consulting Technician	UNCLASSIFIED	Leak Limit of 500
COKE	R461	1	TAR SEPARATOR SUMP PUMP	02	Accessible	40 CFR 61 Subpart L	Pump	0	Standard Service	UNCLASSIFIED	FALSE	Light Liquid	FALSE	24-Oct-16	09-Apr-18	23-Nov-16	VIS	PPM Consulting Technician	UNCLASSIFIED	Leak Limit of 500
COKE	R461	1	TAR SEPARATOR SUMP PUMP	02	Accessible	40 CFR 61 Subpart L	Pump	0	Standard Service	UNCLASSIFIED	FALSE	Light Liquid	FALSE	24-Oct-16	17-Apr-18	23-Nov-16	VIS	PPM Consulting Technician	UNCLASSIFIED	Leak Limit of 500
COKE	R501	953	PRIMARY COOLER CIRCULATION PUMP (STEAM)	02	Accessible	40 CFR 61 Subpart L	Pump	0	Standard Service	UNCLASSIFIED	FALSE	Light Liquid	FALSE	24-May-17	03-Jan-18	24-May-17	VIS	PPM Consulting Technician	UNCLASSIFIED	Leak Limit of 500
COKE	R501	953	PRIMARY COOLER CIRCULATION PUMP (STEAM)	02	Accessible	40 CFR 61 Subpart L	Pump	0	Standard Service	UNCLASSIFIED	FALSE	Light Liquid	FALSE	24-May-17	26-Feb-18	24-May-17	VIS	PPM Consulting Technician	UNCLASSIFIED	Leak Limit of 500
COKE	R501	953	PRIMARY COOLER CIRCULATION PUMP (STEAM)	02	Accessible	40 CFR 61 Subpart L	Pump	0	Standard Service	UNCLASSIFIED	FALSE	Light Liquid	FALSE	24-May-17	05-Mar-18	24-May-17	VIS	PPM Consulting Technician	UNCLASSIFIED	Leak Limit of 500
COKE	R501	953	PRIMARY COOLER CIRCULATION PUMP (STEAM)	02	Accessible	40 CFR 61 Subpart L	Pump	0	Standard Service	UNCLASSIFIED	FALSE	Light Liquid	FALSE	24-May-17	19-Mar-18	24-May-17	VIS	PPM Consulting Technician	UNCLASSIFIED	Leak Limit of 500
COKE	R501	953	PRIMARY COOLER CIRCULATION PUMP (STEAM)	02	Accessible	40 CFR 61 Subpart L	Pump	0	Standard Service	UNCLASSIFIED	FALSE	Light Liquid	FALSE	24-May-17	28-Mar-18	24-May-17	VIS	PPM Consulting Technician	UNCLASSIFIED	Leak Limit of 500
COKE	R501	953	PRIMARY COOLER CIRCULATION PUMP (STEAM)	02	Accessible	40 CFR 61 Subpart L	Pump	0	Standard Service	UNCLASSIFIED	FALSE	Light Liquid	FALSE	24-May-17	04-Apr-18	24-May-17	VIS	PPM Consulting Technician	UNCLASSIFIED	Leak Limit of 500
COKE	R501	953	PRIMARY COOLER CIRCULATION PUMP (STEAM)	02	Accessible	40 CFR 61 Subpart L	Pump	0	Standard Service	UNCLASSIFIED	FALSE	Light Liquid	FALSE	24-May-17	30-May-18	24-May-17	VIS	PPM Consulting Technician	UNCLASSIFIED	Leak Limit of 500
COKE	R501	953	PRIMARY COOLER CIRCULATION PUMP (STEAM)	02	Accessible	40 CFR 61 Subpart L	Pump	0	Standard Service	UNCLASSIFIED	FALSE	Light Liquid	FALSE	24-May-17	09-Jan-18	24-May-17	VIS	PPM Consulting Technician	UNCLASSIFIED	Leak Limit of 500
COKE	R501	953	PRIMARY COOLER CIRCULATION PUMP (STEAM)	02	Accessible	40 CFR 61 Subpart L	Pump	0	Standard Service	UNCLASSIFIED	FALSE	Light Liquid	FALSE	24-May-17	15-Jan-18	24-May-17	VIS	PPM Consulting Technician	UNCLASSIFIED	Leak Limit of 500
COKE	R501	953	PRIMARY COOLER CIRCULATION PUMP (STEAM)	02	Accessible	40 CFR 61 Subpart L	Pump	0	Standard Service	UNCLASSIFIED	FALSE	Light Liquid	FALSE	24-May-17	29-Jan-18	24-May-17	VIS	PPM Consulting Technician	UNCLASSIFIED	Leak Limit of 500
COKE	R501	953	PRIMARY COOLER CIRCULATION PUMP (STEAM)	02	Accessible	40 CFR 61 Subpart L	Pump	0	Standard Service	UNCLASSIFIED	FALSE	Light Liquid	FALSE	24-May-17	06-Feb-18	24-May-17	VIS	PPM Consulting Technician	UNCLASSIFIED	Leak Limit of 500
COKE	R501	953	PRIMARY COOLER CIRCULATION PUMP (STEAM)	02	Accessible	40 CFR 61 Subpart L	Pump	0	Standard Service	UNCLASSIFIED	FALSE	Light Liquid	FALSE	24-May-17	21-Feb-18	24-May-17	VIS	PPM Consulting Technician	UNCLASSIFIED	Leak Limit of 500
COKE	R501	953	PRIMARY COOLER CIRCULATION PUMP (STEAM)	02	Accessible	40 CFR 61 Subpart L	Pump	0	Standard Service	UNCLASSIFIED	FALSE	Light Liquid	FALSE	24-May-17	09-Apr-18	24-May-17	VIS	PPM Consulting Technician	UNCLASSIFIED	Leak Limit of 500
COKE	R501	953	PRIMARY COOLER CIRCULATION PUMP (STEAM)	02	Accessible	40 CFR 61 Subpart L	Pump	0	Standard Service	UNCLASSIFIED	FALSE	Light Liquid	FALSE	24-May-17	17-Apr-18	24-May-17	VIS	PPM Consulting Technician	UNCLASSIFIED	Leak Limit of 500
COKE	R501	953	PRIMARY COOLER CIRCULATION PUMP (STEAM)	02	Accessible	40 CFR 61 Subpart L	Pump	0	Standard Service	UNCLASSIFIED	FALSE	Light Liquid	FALSE	24-May-17	02-May-18	24-May-17	VIS	PPM Consulting Technician	UNCLASSIFIED	Leak Limit of 500
COKE	R501	953	PRIMARY COOLER CIRCULATION PUMP (STEAM)	02	Accessible	40 CFR 61 Subpart L	Pump	0	Standard Service	UNCLASSIFIED	FALSE	Light Liquid	FALSE	24-May-17	16-May-18	24-May-17	VIS	PPM Consulting Technician	UNCLASSIFIED	Leak Limit of 500
COKE	R501	953	PRIMARY COOLER CIRCULATION PUMP (STEAM)	02	Accessible	40 CFR 61 Subpart L	Pump	0	Standard Service	UNCLASSIFIED	FALSE	Light Liquid	FALSE	24-May-17	21-May-18	24-May-17	VIS	PPM Consulting Technician	UNCLASSIFIED	Leak Limit of 500
COKE	R502	1285	TAR LOADING PUMP	02	Accessible	40 CFR 61 Subpart L	Pump	0	Standard Service	UNCLASSIFIED	FALSE	Light Liquid	FALSE	19-Sep-17	03-Jan-18	19-Sep-17	VIS	PPM Consulting Technician	UNCLASSIFIED	Leak Limit of 500
COKE	R502	1285	TAR LOADING PUMP	02	Accessible	40 CFR 61 Subpart L	Pump	0	Standard Service	UNCLASSIFIED	FALSE	Light Liquid	FALSE	19-Sep-17	09-Jan-18	19-Sep-17	VIS	PPM Consulting Technician	UNCLASSIFIED	Leak Limit of 500
COKE	R502	1285	TAR LOADING PUMP	02	Accessible	40 CFR 61 Subpart L	Pump	0	Standard Service	UNCLASSIFIED	FALSE	Light Liquid	FALSE	19-Sep-17	15-Jan-18	19-Sep-17	VIS	PPM Consulting Technician	UNCLASSIFIED	Leak Limit of 500
COKE	R502	1285	TAR LOADING PUMP	02	Accessible	40 CFR 61 Subpart L	Pump	0	Standard Service	UNCLASSIFIED	FALSE	Light Liquid	FALSE	19-Sep-17	29-Jan-18	19-Sep-17	VIS	PPM Consulting Technician	UNCLASSIFIED	Leak Limit of 500
COKE	R502	1285	TAR LOADING PUMP	02	Accessible	40 CFR 61 Subpart L	Pump	0	Standard Service	UNCLASSIFIED	FALSE	Light Liquid	FALSE	19-Sep-17	28-Mar-18	19-Sep-17	VIS	PPM Consulting Technician	UNCLASSIFIED	Leak Limit of 500
COKE	R502	1285	TAR LOADING PUMP	02	Accessible	40 CFR 61 Subpart L	Pump	0	Standard Service	UNCLASSIFIED	FALSE	Light Liquid	FALSE	19-Sep-17	04-Apr-18	19-Sep-17	VIS	PPM Consulting Technician	UNCLASSIFIED	Leak Limit of 500
COKE	R502	1285	TAR LOADING PUMP	02	Accessible	40 CFR 61 Subpart L	Pump	0	Standard Service	UNCLASSIFIED	FALSE	Light Liquid	FALSE	19-Sep-17	09-Apr-18	19-Sep-17	VIS	PPM Consulting Technician	UNCLASSIFIED	Leak Limit of 500
COKE	R502	1285	TAR LOADING PUMP	02	Accessible	40 CFR 61 Subpart L	Pump	0	Standard Service	UNCLASSIFIED	FALSE	Light Liquid	FALSE	19-Sep-17	17-Apr-18	19-Sep-17	VIS	PPM Consulting Technician	UNCLASSIFIED	Leak Limit of 500
COKE	R502	1285	TAR LOADING PUMP	02	Accessible	40 CFR 61 Subpart L	Pump	0	Standard Service	UNCLASSIFIED	FALSE	Light Liquid	FALSE	19-Sep-17	02-May-18	19-Sep-17	VIS	PPM Consulting Technician	UNCLASSIFIED	Leak Limit of 500
COKE	R502	1285	TAR LOADING PUMP	02	Accessible	40 CFR 61 Subpart L	Pump	0	Standard Service	UNCLASSIFIED	FALSE	Light Liquid	FALSE	19-Sep-17	06-Feb-18	19-Sep-17	VIS	PPM Consulting Technician	UNCLASSIFIED	Leak Limit of 500
COKE	R502	1285	TAR LOADING PUMP	02	Accessible	40 CFR 61 Subpart L	Pump	0	Standard Service	UNCLASSIFIED	FALSE	Light Liquid	FALSE	19-Sep-17	21-Feb-18	19-Sep-17	VIS	PPM Consulting Technician	UNCLASSIFIED	Leak Limit of 500
COKE	R502	1285	TAR LOADING PUMP	02	Accessible	40 CFR 61 Subpart L	Pump	0	Standard Service	UNCLASSIFIED	FALSE	Light Liquid	FALSE	19-Sep-17	26-Feb-18	19-Sep-17	VIS	PPM Consulting Technician	UNCLASSIFIED	Leak Limit of 500
COKE	R502	1285	TAR LOADING PUMP	02	Accessible	40 CFR 61 Subpart L	Pump	0	Standard Service	UNCLASSIFIED	FALSE	Light Liquid	FALSE	19-Sep-17	05-Mar-18	19-Sep-17	VIS	PPM Consulting Technician	UNCLASSIFIED	Leak Limit of 500
COKE	R502	1285	TAR LOADING PUMP	02	Accessible	40 CFR 61 Subpart L	Pump	0	Standard Service	UNCLASSIFIED	FALSE	Light Liquid	FALSE	19-Sep-17	19-Mar-18	19-Sep-17	VIS	PPM Consulting Technician	UNCLASSIFIED	Leak Limit of 500

UNIT_CODE	TAG_ NUMBER	ROUTE	LOCATION	LEVEL	ACCESS_DESC	GROUP_DESC	EQUITYPE DESC	SIZE	CONFIG_DESC	PRODUCT_DESC	CLOSED_ VENT_SYSTEM	SERVICE_DESC	UNDER_300_ HOURS_SERVICE	DATE_ADDED	DATE_INSPECTED	DATE_IN_SERVICE	INSPTYPE _CODE	TECH_DESC	INSTRUM_DESC	LEAKLIM_DESC
COKE	R502	1285	TAR LOADING PUMP	02	Accessible	40 CFR 61 Subpart L	Pump	0	Standard Service	UNCLASSIFIED	FALSE	Light Liquid	FALSE	19-Sep-17	16-May-18	19-Sep-17	VIS	PPM Consulting Technician	UNCLASSIFIED	Leak Limit of 500
COKE	R502	1285	TAR LOADING PUMP	02	Accessible	40 CFR 61 Subpart L	Pump	0	Standard Service	UNCLASSIFIED	FALSE	Light Liquid	FALSE	19-Sep-17	21-May-18	19-Sep-17	VIS	PPM Consulting Technician	UNCLASSIFIED	Leak Limit of 500
COKE	R502	1285	TAR LOADING PUMP	02	Accessible	40 CFR 61 Subpart L	Pump	0	Standard Service	UNCLASSIFIED	FALSE	Light Liquid	FALSE	19-Sep-17	30-May-18	19-Sep-17	VIS	PPM Consulting Technician	UNCLASSIFIED	Leak Limit of 500
COKE	R533	1046	AIR DIAPHRAGM SEAL PUMP AT LITTLE HOLDER	00	Accessible	40 CFR 61 Subpart L	Pump	0	Standard Service	UNCLASSIFIED	FALSE	Light Liquid	FALSE	13-Mar-18	04-Apr-18	13-Mar-18	VIS	PPM Consulting Technician	UNCLASSIFIED	Leak Limit of 500
COKE	R533	1046	AIR DIAPHRAGM SEAL PUMP AT LITTLE HOLDER	00	Accessible	40 CFR 61 Subpart L	Pump	0	Standard Service	UNCLASSIFIED	FALSE	Light Liquid	FALSE	13-Mar-18	09-Apr-18	13-Mar-18	VIS	PPM Consulting Technician	UNCLASSIFIED	Leak Limit of 500
COKE	R533	1046	AIR DIAPHRAGM SEAL PUMP AT LITTLE HOLDER	00	Accessible	40 CFR 61 Subpart L	Pump	0	Standard Service	UNCLASSIFIED	FALSE	Light Liquid	FALSE	13-Mar-18	17-Apr-18	13-Mar-18	VIS	PPM Consulting Technician	UNCLASSIFIED	Leak Limit of 500
COKE	R533	1046	AIR DIAPHRAGM SEAL PUMP AT LITTLE HOLDER	00	Accessible	40 CFR 61 Subpart L	Pump	0	Standard Service	UNCLASSIFIED	FALSE	Light Liquid	FALSE	13-Mar-18	02-May-18	13-Mar-18	VIS	PPM Consulting Technician	UNCLASSIFIED	Leak Limit of 500
COKE	R533	1046	AIR DIAPHRAGM SEAL PUMP AT LITTLE HOLDER	00	Accessible	40 CFR 61 Subpart L	Pump	0	Standard Service	UNCLASSIFIED	FALSE	Light Liquid	FALSE	13-Mar-18	16-May-18	13-Mar-18	VIS	PPM Consulting Technician	UNCLASSIFIED	Leak Limit of 500
COKE	R533	1046	AIR DIAPHRAGM SEAL PUMP AT LITTLE HOLDER	00	Accessible	40 CFR 61 Subpart L	Pump	0	Standard Service	UNCLASSIFIED	FALSE	Light Liquid	FALSE	13-Mar-18	21-May-18	13-Mar-18	VIS	PPM Consulting Technician	UNCLASSIFIED	Leak Limit of 500
COKE	R533	1046	AIR DIAPHRAGM SEAL PUMP AT LITTLE HOLDER	00	Accessible	40 CFR 61 Subpart L	Pump	0	Standard Service	UNCLASSIFIED	FALSE	Light Liquid	FALSE	13-Mar-18	28-Mar-18	13-Mar-18	VIS	PPM Consulting Technician	UNCLASSIFIED	Leak Limit of 500
COKE	R533	1046	AIR DIAPHRAGM SEAL PUMP AT LITTLE HOLDER	00	Accessible	40 CFR 61 Subpart L	Pump	0	Standard Service	UNCLASSIFIED	FALSE	Light Liquid	FALSE	13-Mar-18	30-May-18	13-Mar-18	VIS	PPM Consulting Technician	UNCLASSIFIED	Leak Limit of 500
COKE	R54	321	PUMP @ PROCESS WATER COOLING TOWER	04	Accessible	40 CFR 61 Subpart L	Pump	0	Standard Service	UNCLASSIFIED	FALSE	Light Liquid	FALSE	24-Oct-16	29-Jan-18	23-Nov-16	VIS	PPM Consulting Technician	UNCLASSIFIED	Leak Limit of 500
COKE	R54	321	PUMP @ PROCESS WATER COOLING TOWER	04	Accessible	40 CFR 61 Subpart L	Pump	0	Standard Service	UNCLASSIFIED	FALSE	Light Liquid	FALSE	24-Oct-16	06-Feb-18	23-Nov-16	VIS	PPM Consulting Technician	UNCLASSIFIED	Leak Limit of 500
COKE	R54	321	PUMP @ PROCESS WATER COOLING TOWER	04	Accessible	40 CFR 61 Subpart L	Pump	0	Standard Service	UNCLASSIFIED	FALSE	Light Liquid	FALSE	24-Oct-16	21-Feb-18	23-Nov-16	VIS	PPM Consulting Technician	UNCLASSIFIED	Leak Limit of 500
COKE	R54	321	PUMP @ PROCESS WATER COOLING TOWER	04	Accessible	40 CFR 61 Subpart L	Pump	0	Standard Service	UNCLASSIFIED	FALSE	Light Liquid	FALSE	24-Oct-16	26-Feb-18	23-Nov-16	VIS	PPM Consulting Technician	UNCLASSIFIED	Leak Limit of 500
COKE	R54	321	PUMP @ PROCESS WATER COOLING TOWER	04	Accessible	40 CFR 61 Subpart L	Pump	0	Standard Service	UNCLASSIFIED	FALSE	Light Liquid	FALSE	24-Oct-16	05-Mar-18	23-Nov-16	VIS	PPM Consulting Technician	UNCLASSIFIED	Leak Limit of 500
COKE	R54	321	PUMP @ PROCESS WATER COOLING TOWER	04	Accessible	40 CFR 61 Subpart L	Pump	0	Standard Service	UNCLASSIFIED	FALSE	Light Liquid	FALSE	24-Oct-16	02-May-18	23-Nov-16	VIS	PPM Consulting Technician	UNCLASSIFIED	Leak Limit of 500
COKE	R54	321	PUMP @ PROCESS WATER COOLING TOWER	04	Accessible	40 CFR 61 Subpart L	Pump	0	Standard Service	UNCLASSIFIED	FALSE	Light Liquid	FALSE	24-Oct-16	16-May-18	23-Nov-16	VIS	PPM Consulting Technician	UNCLASSIFIED	Leak Limit of 500
COKE	R54	321	PUMP @ PROCESS WATER COOLING TOWER	04	Accessible	40 CFR 61 Subpart L	Pump	0	Standard Service	UNCLASSIFIED	FALSE	Light Liquid	FALSE	24-Oct-16	21-May-18	23-Nov-16	VIS	PPM Consulting Technician	UNCLASSIFIED	Leak Limit of 500
COKE	R54	321	PUMP @ PROCESS WATER COOLING TOWER	04	Accessible	40 CFR 61 Subpart L	Pump	0	Standard Service	UNCLASSIFIED	FALSE	Light Liquid	FALSE	24-Oct-16	30-May-18	23-Nov-16	VIS	PPM Consulting Technician	UNCLASSIFIED	Leak Limit of 500
COKE	R54	321	PUMP @ PROCESS WATER COOLING TOWER	04	Accessible	40 CFR 61 Subpart L	Pump	0	Standard Service	UNCLASSIFIED	FALSE	Light Liquid	FALSE	24-Oct-16	03-Jan-18	23-Nov-16	VIS	PPM Consulting Technician	UNCLASSIFIED	Leak Limit of 500
COKE	R54	321	PUMP @ PROCESS WATER COOLING TOWER	04	Accessible	40 CFR 61 Subpart L	Pump	0	Standard Service	UNCLASSIFIED	FALSE	Light Liquid	FALSE	24-Oct-16	09-Jan-18	23-Nov-16	VIS	PPM Consulting Technician	UNCLASSIFIED	Leak Limit of 500
COKE	R54	321	PUMP @ PROCESS WATER COOLING TOWER	04	Accessible	40 CFR 61 Subpart L	Pump	0	Standard Service	UNCLASSIFIED	FALSE	Light Liquid	FALSE	24-Oct-16	15-Jan-18	23-Nov-16	VIS	PPM Consulting Technician	UNCLASSIFIED	Leak Limit of 500
COKE	R54	321	PUMP @ PROCESS WATER COOLING TOWER	04	Accessible	40 CFR 61 Subpart L	Pump	0	Standard Service	UNCLASSIFIED	FALSE	Light Liquid	FALSE	24-Oct-16	19-Mar-18	23-Nov-16	VIS	PPM Consulting Technician	UNCLASSIFIED	Leak Limit of 500
COKE	R54	321	PUMP @ PROCESS WATER COOLING TOWER	04	Accessible	40 CFR 61 Subpart L	Pump	0	Standard Service	UNCLASSIFIED	FALSE	Light Liquid	FALSE	24-Oct-16	28-Mar-18	23-Nov-16	VIS	PPM Consulting Technician	UNCLASSIFIED	Leak Limit of 500
COKE	R54	321	PUMP @ PROCESS WATER COOLING TOWER	04	Accessible	40 CFR 61 Subpart L	Pump	0	Standard Service	UNCLASSIFIED	FALSE	Light Liquid	FALSE	24-Oct-16	04-Apr-18	23-Nov-16	VIS	PPM Consulting Technician	UNCLASSIFIED	Leak Limit of 500
COKE	R54	321	PUMP @ PROCESS WATER COOLING TOWER	04	Accessible	40 CFR 61 Subpart L	Pump	0	Standard Service	UNCLASSIFIED	FALSE	Light Liquid	FALSE	24-Oct-16	09-Apr-18	23-Nov-16	VIS	PPM Consulting Technician	UNCLASSIFIED	Leak Limit of 500
COKE	R54	321	PUMP @ PROCESS WATER COOLING TOWER	04	Accessible	40 CFR 61 Subpart L	Pump	0	Standard Service	UNCLASSIFIED	FALSE	Light Liquid	FALSE	24-Oct-16	17-Apr-18	23-Nov-16	VIS	PPM Consulting Technician	UNCLASSIFIED	Leak Limit of 500
COKE	R59	316	PUMP @ PROCESS WATER COOLING TOWER	04	Accessible	40 CFR 61 Subpart L	Pump	0	Standard Service	UNCLASSIFIED	FALSE	Light Liquid	FALSE	24-Oct-16	03-Jan-18	23-Nov-16	VIS	PPM Consulting Technician	UNCLASSIFIED	Leak Limit of 500
COKE	R59	316	PUMP @ PROCESS WATER COOLING TOWER	04	Accessible	40 CFR 61 Subpart L	Pump	0	Standard Service	UNCLASSIFIED	FALSE	Light Liquid	FALSE	24-Oct-16	09-Jan-18	23-Nov-16	VIS	PPM Consulting Technician	UNCLASSIFIED	Leak Limit of 500
COKE	R59	316	PUMP @ PROCESS WATER COOLING TOWER	04	Accessible	40 CFR 61 Subpart L	Pump	0	Standard Service	UNCLASSIFIED	FALSE	Light Liquid	FALSE	24-Oct-16	15-Jan-18	23-Nov-16	VIS	PPM Consulting Technician	UNCLASSIFIED	Leak Limit of 500
COKE	R59	316	PUMP @ PROCESS WATER COOLING TOWER	04	Accessible	40 CFR 61 Subpart L	Pump	0	Standard Service	UNCLASSIFIED	FALSE	Light Liquid	FALSE	24-Oct-16	29-Jan-18	23-Nov-16	VIS	PPM Consulting Technician	UNCLASSIFIED	Leak Limit of 500
COKE	R59	316	PUMP @ PROCESS WATER COOLING TOWER	04	Accessible	40 CFR 61 Subpart L	Pump	0	Standard Service	UNCLASSIFIED	FALSE	Light Liquid	FALSE	24-Oct-16	06-Feb-18	23-Nov-16	VIS	PPM Consulting Technician	UNCLASSIFIED	Leak Limit of 500
COKE	R59	316	PUMP @ PROCESS WATER COOLING TOWER	04	Accessible	40 CFR 61 Subpart L	Pump	0	Standard Service	UNCLASSIFIED	FALSE	Light Liquid	FALSE	24-Oct-16	21-Feb-18	23-Nov-16	VIS	PPM Consulting Technician	UNCLASSIFIED	Leak Limit of 500
COKE	R59	316	PUMP @ PROCESS WATER COOLING TOWER	04	Accessible	40 CFR 61 Subpart L	Pump	0	Standard Service	UNCLASSIFIED	FALSE	Light Liquid	FALSE	24-Oct-16	26-Feb-18	23-Nov-16	VIS	PPM Consulting Technician	UNCLASSIFIED	Leak Limit of 500
COKE	R59	316	PUMP @ PROCESS WATER COOLING TOWER	04	Accessible	40 CFR 61 Subpart L	Pump	0	Standard Service	UNCLASSIFIED	FALSE	Light Liquid	FALSE	24-Oct-16	05-Mar-18	23-Nov-16	VIS	PPM Consulting Technician	UNCLASSIFIED	Leak Limit of 500
COKE	R59	316	PUMP @ PROCESS WATER COOLING TOWER	04	Accessible	40 CFR 61 Subpart L	Pump	0	Standard Service	UNCLASSIFIED	FALSE	Light Liquid	FALSE	24-Oct-16	19-Mar-18	23-Nov-16	VIS	PPM Consulting Technician	UNCLASSIFIED	Leak Limit of 500
COKE	R59	316	PUMP @ PROCESS WATER COOLING TOWER	04	Accessible	40 CFR 61 Subpart L	Pump	0	Standard Service	UNCLASSIFIED	FALSE	Light Liquid	FALSE	24-Oct-16	28-Mar-18	23-Nov-16	VIS	PPM Consulting Technician	UNCLASSIFIED	Leak Limit of 500
COKE	R59	316	PUMP @ PROCESS WATER COOLING TOWER	04	Accessible	40 CFR 61 Subpart L	Pump	0	Standard Service	UNCLASSIFIED	FALSE	Light Liquid	FALSE	24-Oct-16	04-Apr-18	23-Nov-16	VIS	PPM Consulting Technician	UNCLASSIFIED	Leak Limit of 500
COKE	R59	316	PUMP @ PROCESS WATER COOLING TOWER	04	Accessible	40 CFR 61 Subpart L	Pump	0	Standard Service	UNCLASSIFIED	FALSE	Light Liquid	FALSE	24-Oct-16	30-May-18	23-Nov-16	VIS	PPM Consulting Technician	UNCLASSIFIED	Leak Limit of 500
COKE	R59	316	PUMP @ PROCESS WATER COOLING TOWER	04	Accessible	40 CFR 61 Subpart L	Pump	0	Standard Service	UNCLASSIFIED	FALSE	Light Liquid	FALSE	24-Oct-16	09-Apr-18	23-Nov-16	VIS	PPM Consulting Technician	UNCLASSIFIED	Leak Limit of 500
COKE	R59	316	PUMP @ PROCESS WATER COOLING TOWER	04	Accessible	40 CFR 61 Subpart L	Pump	0	Standard Service	UNCLASSIFIED	FALSE	Light Liquid	FALSE	24-Oct-16	17-Apr-18	23-Nov-16	VIS	PPM Consulting Technician	UNCLASSIFIED	Leak Limit of 500
COKE	R59	316	PUMP @ PROCESS WATER COOLING TOWER	04	Accessible	40 CFR 61 Subpart L	Pump	0	Standard Service	UNCLASSIFIED	FALSE	Light Liquid	FALSE	24-Oct-16	02-May-18	23-Nov-16	VIS	PPM Consulting Technician	UNCLASSIFIED	Leak Limit of 500
COKE	R59	316	PUMP @ PROCESS WATER COOLING TOWER	04	Accessible	40 CFR 61 Subpart L	Pump	0	Standard Service	UNCLASSIFIED	FALSE	Light Liquid	FALSE	24-Oct-16	16-May-18	23-Nov-16	VIS	PPM Consulting Technician	UNCLASSIFIED	Leak Limit of 500
COKE	R59	316	PUMP @ PROCESS WATER COOLING TOWER	04	Accessible	40 CFR 61 Subpart L	Pump	0	Standard Service	UNCLASSIFIED	FALSE	Light Liquid	FALSE	24-Oct-16	21-May-18	23-Nov-16	VIS	PPM Consulting Technician	UNCLASSIFIED	Leak Limit of 500
COKE	R653	830.005	2FT S OF HOT WATER STORAGE TANK	02	Accessible	40 CFR 61 Subpart L	Pump	0	Standard Service	UNCLASSIFIED	FALSE	Light Liquid	FALSE	21-Mar-18	28-Mar-18	21-Mar-18	VIS	PPM Consulting Technician	UNCLASSIFIED	Leak Limit of 500
COKE	R653	830.005	2FT S OF HOT WATER STORAGE TANK	02	Accessible	40 CFR 61 Subpart L	Pump	0	Standard Service	UNCLASSIFIED	FALSE	Light Liquid	FALSE	21-Mar-18	04-Apr-18	21-Mar-18	VIS	PPM Consulting Technician	UNCLASSIFIED	Leak Limit of 500
COKE	R653	830.005	2FT S OF HOT WATER STORAGE TANK	02	Accessible	40 CFR 61 Subpart L	Pump	0	Standard Service	UNCLASSIFIED	FALSE	Light Liquid	FALSE	21-Mar-18	09-Apr-18	21-Mar-18	VIS	PPM Consulting Technician	UNCLASSIFIED	Leak Limit of 500
COKE	R653	830.005	2FT S OF HOT WATER STORAGE TANK	02	Accessible	40 CFR 61 Subpart L	Pump	0	Standard Service	UNCLASSIFIED	FALSE	Light Liquid	FALSE	21-Mar-18	17-Apr-18	21-Mar-18	VIS	PPM Consulting Technician	UNCLASSIFIED	Leak Limit of 500
COKE	R653	830.005	2FT S OF HOT WATER STORAGE TANK	02	Accessible	40 CFR 61 Subpart L	Pump	0	Standard Service	UNCLASSIFIED	FALSE	Light Liquid	FALSE	21-Mar-18	02-May-18	21-Mar-18	VIS	PPM Consulting Technician	UNCLASSIFIED	Leak Limit of 500
COKE	R653	830.005	2FT S OF HOT WATER STORAGE TANK	02	Accessible	40 CFR 61 Subpart L	Pump	0	Standard Service	UNCLASSIFIED	FALSE	Light Liquid	FALSE	21-Mar-18	16-May-18	21-Mar-18	VIS	PPM Consulting Technician	UNCLASSIFIED	Leak Limit of 500
COKE	R653	830.005	2FT S OF HOT WATER STORAGE TANK	02	Accessible	40 CFR 61 Subpart L	Pump	0	Standard Service	UNCLASSIFIED	FALSE	Light Liquid	FALSE	21-Mar-18	21-May-18	21-Mar-18	VIS	PPM Consulting Technician	UNCLASSIFIED	Leak Limit of 500
COKE	R653	830.005	2FT S OF HOT WATER STORAGE TANK	02	Accessible	40 CFR 61 Subpart L	Pump	0	Standard Service	UNCLASSIFIED	FALSE	Light Liquid	FALSE	21-Mar-18	30-May-18	21-Mar-18	VIS	PPM Consulting Technician	UNCLASSIFIED	Leak Limit of 500
COKE	R83	348	NORTH WASH OIL PUMPING TANK PUMP	02	Accessible	40 CFR 61 Subpart L	Pump	0	Standard Service	UNCLASSIFIED	FALSE	Light Liquid	FALSE	24-Oct-16	09-Jan-18	23-Nov-16	VIS	PPM Consulting Technician	UNCLASSIFIED	Leak Limit of 500
COKE	R83	348	NORTH WASH OIL PUMPING TANK PUMP	02	Accessible	40 CFR 61 Subpart L	Pump	0	Standard Service	UNCLASSIFIED	FALSE	Light Liquid	FALSE	24-Oct-16	15-Jan-18	23-Nov-16	VIS	PPM Consulting Technician	UNCLASSIFIED	Leak Limit of 500
COKE	R83	348	NORTH WASH OIL PUMPING TANK PUMP	02	Accessible	40 CFR 61 Subpart L	Pump	0	Standard Service	UNCLASSIFIED	FALSE	Light Liquid	FALSE	24-Oct-16	29-Jan-18	23-Nov-16	VIS	PPM Consulting Technician	UNCLASSIFIED	Leak Limit of 500
COKE	R83	348	NORTH WASH OIL PUMPING TANK PUMP	02	Accessible	40 CFR 61 Subpart L	Pump	0	Standard Service	UNCLASSIFIED	FALSE	Light Liquid	FALSE	24-Oct-16	06-Feb-18	23-Nov-16	VIS	PPM Consulting Technician	UNCLASSIFIED	Leak Limit of 500
COKE	R83	348	NORTH WASH OIL PUMPING TANK PUMP	02	Accessible	40 CFR 61 Subpart L	Pump	0	Standard Service	UNCLASSIFIED	FALSE	Light Liquid	FALSE	24-Oct-16	21-Feb-18	23-Nov-16	VIS	PPM Consulting Technician	UNCLASSIFIED	Leak Limit of 500
COKE	R83	348	NORTH WASH OIL PUMPING TANK PUMP	02	Accessible	40 CFR 61 Subpart L	Pump	0	Standard Service	UNCLASSIFIED	FALSE	Light Liquid	FALSE	24-Oct-16	09-Apr-18	23-Nov-16	VIS	PPM Consulting Technician	UNCLASSIFIED	Leak Limit of 500
COKE	R83	348	NORTH WASH OIL PUMPING TANK PUMP	02	Accessible	40 CFR 61 Subpart L	Pump	0	Standard Service	UNCLASSIFIED	FALSE	Light Liquid	FALSE	24-Oct-16	17-Apr-18	23-Nov-16	VIS	PPM Consulting Technician	UNCLASSIFIED	Leak Limit of 500
COKE	R83	348	NORTH WASH OIL PUMPING TANK PUMP	02	Accessible	40 CFR 61 Subpart L	Pump	0	Standard Service	UNCLASSIFIED	FALSE	Light Liquid	FALSE	24-Oct-16	02-May-18	23-Nov-16	VIS	PPM Consulting Technician	UNCLASSIFIED	Leak Limit of 500
COKE	R83	348	NORTH WASH OIL PUMPING TANK PUMP	02	Accessible	40 CFR 61 Subpart L	Pump	0	Standard Service	UNCLASSIFIED	FALSE	Light Liquid	FALSE	24-Oct-16	16-May-18	23-Nov-16	VIS	PPM Consulting Technician	UNCLASSIFIED	Leak Limit of 500
COKE	R83	348	NORTH WASH OIL PUMPING TANK PUMP	02	Accessible	40 CFR 61 Subpart L	Pump	0	Standard Service	UNCLASSIFIED	FALSE	Light Liquid	FALSE	24-Oct-16	21-May-18	23-Nov-16	VIS	PPM Consulting Technician	UNCLASSIFIED	Leak Limit of 500
COKE	R83	348	NORTH WASH OIL PUMPING TANK PUMP	02	Accessible	40 CFR 61 Subpart L	Pump	0	Standard Service	UNCLASSIFIED	FALSE	Light Liquid	FALSE	24-Oct-16	03-Jan-18	23-Nov-16	VIS	PPM Consulting Technician	UNCLASSIFIED	Leak Limit of 500
COKE	R83	348	NORTH WASH OIL PUMPING TANK PUMP	02	Accessible	40 CFR 61 Subpart L	Pump	0	Standard Service	UNCLASSIFIED	FALSE	Light Liquid	FALSE	24-Oct-16	26-Feb-18	23-Nov-16	VIS	PPM Consulting Technician	UNCLASSIFIED	Leak Limit of 500
COKE	R83	348	NORTH WASH OIL PUMPING TANK PUMP	02	Accessible	40 CFR 61 Subpart L	Pump	0	Standard Service	UNCLASSIFIED	FALSE	Light Liquid	FALSE	24-Oct-16	05-Mar-18	23-Nov-16	VIS	PPM Consulting Technician	UNCLASSIFIED	Leak Limit of 500
COKE	R83	348	NORTH WASH OIL PUMPING TANK PUMP	02	Accessible	40 CFR 61 Subpart L	Pump	0	Standard Service	UNCLASSIFIED	FALSE	Light Liquid	FALSE	24-Oct-16	19-Mar-18	23-Nov-16	VIS	PPM Consulting Technician	UNCLASSIFIED	Leak Limit of 500
COKE	R83	348	NORTH WASH OIL PUMPING TANK PUMP	02	Accessible	40 CFR 61 Subpart L	Pump	0	Standard Service	UNCLASSIFIED	FALSE	Light Liquid	FALSE	24-Oct-16	28-Mar-18	23-Nov-16	VIS	PPM Consulting Technician	UNCLASSIFIED	Leak Limit of 500
COKE	R83	348	NORTH WASH OIL PUMPING TANK PUMP	02	Accessible	40 CFR 61 Subpart L	Pump	0	Standard Service	UNCLASSIFIED	FALSE	Light Liquid	FALSE	24-Oct-16	04-Apr-18	23-Nov-16	VIS	PPM Consulting Technician	UNCLASSIFIED	Leak Limit of 500
COKE	R88	350	SOUTH WASH OIL PUMPING TANK PUMP	01	Accessible	40 CFR 61 Subpart L	Pump	0	Standard Service	UNCLASSIFIED	FALSE	Light Liquid	FALSE	24-Oct-16	30-May-18	23-Nov-16	VIS	PPM Consulting Technician	UNCLASSIFIED	Leak Limit of 500
COKE	R88	350	SOUTH WASH OIL PUMPING TANK PUMP	01	Accessible	40 CFR 61 Subpart L	Pump	0	Standard Service	UNCLASSIFIED	FALSE	Light Liquid	FALSE	24-Oct-16	06-Feb-18	23-Nov-16	VIS	PPM Consulting Technician	UNCLASSIFIED	Leak Limit of 500
COKE	R88	350	SOUTH WASH OIL PUMPING TANK PUMP	01	Accessible	40 CFR 61 Subpart L	Pump	0	Standard Service	UNCLASSIFIED	FALSE	Light Liquid	FALSE	24-Oct-16	21-Feb-18	23-Nov-16	VIS	PPM Consulting Technician	UNCLASSIFIED	Leak Limit of 500
COKE	R88	350	SOUTH WASH OIL PUMPING TANK PUMP	01	Accessible	40 CFR 61 Subpart L	Pump	0	Standard Service	UNCLASSIFIED	FALSE	Light Liquid	FALSE	24-Oct-16	26-Feb-18	23-Nov-16	VIS	PPM Consulting Technician	UNCLASSIFIED	Leak Limit of 500
COKE	R88	350	SOUTH WASH OIL PUMPING TANK PUMP	01	Accessible	40 CFR 61 Subpart L	Pump	0	Standard Service	UNCLASSIFIED	FALSE	Light Liquid	FALSE	24-Oct-16	05-Mar-18	23-Nov-16	VIS	PPM Consulting Technician	UNCLASSIFIED	Leak Limit of 500

UNIT_CODE	TAG_ NUMBER	ROUTE	LOCATION	LEVEL	ACCESS_DESC	GROUP_DESC	EQUITYPE DESC	SIZE	CONFIG_DESC	PRODUCT_DESC	CLOSED_ VENT_SYSTEM	SERVICE_DESC	UNDER_300_ HOURS_SERVICE	DATE_ADDED	DATE_INSPECTED	DATE_IN_SERVICE	INSPTYPE _CODE	TECH_DESC	INSTRUM_DESC	LEAKLIM_DESC
COKE	R88	350	SOUTH WASH OIL PUMPING TANK PUMP	01	Accessible	40 CFR 61 Subpart L	Pump	0	Standard Service	UNCLASSIFIED	FALSE	Light Liquid	FALSE	24-Oct-16	19-Mar-18	23-Nov-16	VIS	PPM Consulting Technician	UNCLASSIFIED	Leak Limit of 500
COKE	R88	350	SOUTH WASH OIL PUMPING TANK PUMP	01	Accessible	40 CFR 61 Subpart L	Pump	0	Standard Service	UNCLASSIFIED	FALSE	Light Liquid	FALSE	24-Oct-16	16-May-18	23-Nov-16	VIS	PPM Consulting Technician	UNCLASSIFIED	Leak Limit of 500
COKE	R88	350	SOUTH WASH OIL PUMPING TANK PUMP	01	Accessible	40 CFR 61 Subpart L	Pump	0	Standard Service	UNCLASSIFIED	FALSE	Light Liquid	FALSE	24-Oct-16	21-May-18	23-Nov-16	VIS	PPM Consulting Technician	UNCLASSIFIED	Leak Limit of 500
COKE	R88	350	SOUTH WASH OIL PUMPING TANK PUMP	01	Accessible	40 CFR 61 Subpart L	Pump	0	Standard Service	UNCLASSIFIED	FALSE	Light Liquid	FALSE	24-Oct-16	30-May-18	23-Nov-16	VIS	PPM Consulting Technician	UNCLASSIFIED	Leak Limit of 500
COKE	R88	350	SOUTH WASH OIL PUMPING TANK PUMP	01	Accessible	40 CFR 61 Subpart L	Pump	0	Standard Service	UNCLASSIFIED	FALSE	Light Liquid	FALSE	24-Oct-16	03-Jan-18	23-Nov-16	VIS	PPM Consulting Technician	UNCLASSIFIED	Leak Limit of 500
COKE	R88	350	SOUTH WASH OIL PUMPING TANK PUMP	01	Accessible	40 CFR 61 Subpart L	Pump	0	Standard Service	UNCLASSIFIED	FALSE	Light Liquid	FALSE	24-Oct-16	09-Jan-18	23-Nov-16	VIS	PPM Consulting Technician	UNCLASSIFIED	Leak Limit of 500
COKE	R88	350	SOUTH WASH OIL PUMPING TANK PUMP	01	Accessible	40 CFR 61 Subpart L	Pump	0	Standard Service	UNCLASSIFIED	FALSE	Light Liquid	FALSE	24-Oct-16	15-Jan-18	23-Nov-16	VIS	PPM Consulting Technician	UNCLASSIFIED	Leak Limit of 500
COKE	R88	350	SOUTH WASH OIL PUMPING TANK PUMP	01	Accessible	40 CFR 61 Subpart L	Pump	0	Standard Service	UNCLASSIFIED	FALSE	Light Liquid	FALSE	24-Oct-16	29-Jan-18	23-Nov-16	VIS	PPM Consulting Technician	UNCLASSIFIED	Leak Limit of 500
COKE	R88	350	SOUTH WASH OIL PUMPING TANK PUMP	01	Accessible	40 CFR 61 Subpart L	Pump	0	Standard Service	UNCLASSIFIED	FALSE	Light Liquid	FALSE	24-Oct-16	28-Mar-18	23-Nov-16	VIS	PPM Consulting Technician	UNCLASSIFIED	Leak Limit of 500
COKE	R88	350	SOUTH WASH OIL PUMPING TANK PUMP	01	Accessible	40 CFR 61 Subpart L	Pump	0	Standard Service	UNCLASSIFIED	FALSE	Light Liquid	FALSE	24-Oct-16	04-Apr-18	23-Nov-16	VIS	PPM Consulting Technician	UNCLASSIFIED	Leak Limit of 500
COKE	R88	350	SOUTH WASH OIL PUMPING TANK PUMP	01	Accessible	40 CFR 61 Subpart L	Pump	0	Standard Service	UNCLASSIFIED	FALSE	Light Liquid	FALSE	24-Oct-16	09-Apr-18	23-Nov-16	VIS	PPM Consulting Technician	UNCLASSIFIED	Leak Limit of 500
COKE	R88	350	SOUTH WASH OIL PUMPING TANK PUMP	01	Accessible	40 CFR 61 Subpart L	Pump	0	Standard Service	UNCLASSIFIED	FALSE	Light Liquid	FALSE	24-Oct-16	17-Apr-18	23-Nov-16	VIS	PPM Consulting Technician	UNCLASSIFIED	Leak Limit of 500
COKE	R88	350	SOUTH WASH OIL PUMPING TANK PUMP	01	Accessible	40 CFR 61 Subpart L	Pump	0	Standard Service	UNCLASSIFIED	FALSE	Light Liquid	FALSE	24-Oct-16	02-May-18	23-Nov-16	VIS	PPM Consulting Technician	UNCLASSIFIED	Leak Limit of 500

UNIT_CODE	TAG_ NUMBER	EQUITYPE _DESC	CONFIG_DESC	SERVICE_DESC	ACCESS_DESC	CLOSED_VENT _SYSTEM	ROUTE	LOCATION	LEVEL	SIZE	IFSTYPE_DESC	ATTEMPT _ALLOWED	UNDER_300_ HOURS_SERVICE	POTENTIAL OPEN_END	GROUP_DESC	PRODUCT_DESC	DATE_ADDED	DATE_IN_SERVICE	TECH_DESC
COKE	BLK1	Valve	Externally Actuated	Light Liquid	Accessible	FALSE	143	VAPOR RECOVERY LINE @ LIGHT OIL LOADING STATION W/14WC	1P6	1	Yes, equipment can be isolated from service	TRUE	FALSE	FALSE	40 CFR 61 Subpart V	BENZENE	31-Oct-16	01-Dec-16	Matt Case
COKE	BLK10	Valve	Externally Actuated	Light Liquid	Accessible	FALSE	257	LIGHT OIL LOADING LINE @ LOADING STATION 2ND LEVEL W/4FL & 1	1P4	3	Yes, equipment can be isolated from service	TRUE	FALSE	FALSE	40 CFR 61 Subpart V	BENZENE	31-Oct-16	16-Nov-16	ARAN PARKER
COKE	BLK100	Valve	Externally Actuated	Light Liquid	Accessible	FALSE	499	(3) 1" TAR LEVEL VALVES FINAL COOLER W/1FL & 3WC	070	1	Yes, equipment can be isolated from service	TRUE	FALSE	FALSE	40 CFR 61 Subpart V	BENZENE	31-Oct-16	12-Nov-16	ARAN PARKER
COKE	BLK100a	Valve	Externally Actuated	Light Liquid	Accessible	FALSE	500	1" TAR LEVEL VALVES FINAL COOLER W/1FL & 3WC	070	1	Yes, equipment can be isolated from service	TRUE	FALSE	FALSE	40 CFR 61 Subpart V	BENZENE	31-Oct-16	12-Nov-16	ARAN PARKER
COKE	BLK100b	Valve	Externally Actuated	Light Liquid	Accessible	FALSE	506	1" TAR LEVEL VALVES FINAL COOLER W/1FL & 3WC	070	1	Yes, equipment can be isolated from service	TRUE	FALSE	FALSE	40 CFR 61 Subpart V	BENZENE	31-Oct-16	12-Nov-16	ARAN PARKER
COKE	BLK101	Valve	Externally Actuated	Light Liquid	Accessible	FALSE	507	(3) 1" TAR LEVEL VALVES FINAL COOLER W/1FL & 3WC	075	1	Yes, equipment can be isolated from service	TRUE	FALSE	FALSE	40 CFR 61 Subpart V	BENZENE	31-Oct-16	12-Nov-16	ARAN PARKER
COKE	BLK101a	Valve	Externally Actuated	Light Liquid	Accessible	FALSE	508	1" TAR LEVEL VALVES FINAL COOLER W/1FL & 3WC	075	1	Yes, equipment can be isolated from service	TRUE	FALSE	FALSE	40 CFR 61 Subpart V	BENZENE	31-Oct-16	12-Nov-16	ARAN PARKER
COKE	BLK101b	Valve	Externally Actuated	Light Liquid	Accessible	FALSE	509	1" TAR LEVEL VALVES FINAL COOLER W/1FL & 3WC	075	1	Yes, equipment can be isolated from service	TRUE	FALSE	FALSE	40 CFR 61 Subpart V	BENZENE	31-Oct-16	12-Nov-16	ARAN PARKER
COKE	BLK102	Valve	Externally Actuated	Light Liquid	Accessible	FALSE	511	(3) 1" TAR LEVEL VALVES FINAL COOLER W/1FL & 3WC	080	1	Yes, equipment can be isolated from service	TRUE	FALSE	FALSE	40 CFR 61 Subpart V	BENZENE	31-Oct-16	12-Nov-16	ARAN PARKER
COKE	BLK102a	Valve	Externally Actuated	Light Liquid	Accessible	FALSE	512	1" TAR LEVEL VALVES FINAL COOLER W/1FL & 3WC	080	1	Yes, equipment can be isolated from service	TRUE	FALSE	FALSE	40 CFR 61 Subpart V	BENZENE	31-Oct-16	12-Nov-16	ARAN PARKER
COKE	BLK103	Valve	Externally Actuated	Light Liquid	Accessible	FALSE	514	(3) 1" TAR LEVEL VALVES FINAL COOLER W/1FL & 3WC	085	1	Yes, equipment can be isolated from service	TRUE	FALSE	FALSE	40 CFR 61 Subpart V	BENZENE	31-Oct-16	12-Nov-16	ARAN PARKER
COKE	BLK103a	Valve	Externally Actuated	Light Liquid	Accessible	FALSE	515	1" TAR LEVEL VALVES FINAL COOLER W/1FL & 3WC	085	1	Yes, equipment can be isolated from service	TRUE	FALSE	FALSE	40 CFR 61 Subpart V	BENZENE	31-Oct-16	12-Nov-16	ARAN PARKER
COKE	BLK103b	Valve	Externally Actuated	Light Liquid	Accessible	FALSE	516	1" TAR LEVEL VALVES FINAL COOLER W/1FL & 3WC	085	1	Yes, equipment can be isolated from service	TRUE	FALSE	FALSE	40 CFR 61 Subpart V	BENZENE	31-Oct-16	12-Nov-16	ARAN PARKER
COKE	BLK104	Valve	Externally Actuated	Light Liquid	Accessible	FALSE	517	(3) 1" TAR LEVEL VALVES FINAL COOLER W/1FL & 3WC	090	1	Yes, equipment can be isolated from service	TRUE	FALSE	FALSE	40 CFR 61 Subpart V	BENZENE	31-Oct-16	12-Nov-16	ARAN PARKER
COKE	BLK104a	Valve	Externally Actuated	Light Liquid	Accessible	FALSE	518	1" TAR LEVEL VALVES FINAL COOLER W/1FL & 3WC	090	1	Yes, equipment can be isolated from service	TRUE	FALSE	FALSE	40 CFR 61 Subpart V	BENZENE	31-Oct-16	12-Nov-16	ARAN PARKER
COKE	BLK104b	Valve	Externally Actuated	Light Liquid	Accessible	FALSE	519	1" TAR LEVEL VALVES FINAL COOLER W/1FL & 3WC	090	1	Yes, equipment can be isolated from service	TRUE	FALSE	FALSE	40 CFR 61 Subpart V	BENZENE	31-Oct-16	12-Nov-16	ARAN PARKER
COKE	BLK105	Valve	Externally Actuated	Light Liquid	Accessible	FALSE	520	(4) 1" TAR LEVEL VALVES FINAL COOLER W/1FL & 3WC	095	1	Yes, equipment can be isolated from service	TRUE	FALSE	FALSE	40 CFR 61 Subpart V	BENZENE	31-Oct-16	12-Nov-16	ARAN PARKER
COKE	BLK105a	Valve	Externally Actuated	Light Liquid	Accessible	FALSE	521	1" TAR LEVEL VALVES FINAL COOLER W/1FL & 3WC	095	1	Yes, equipment can be isolated from service	TRUE	FALSE	FALSE	40 CFR 61 Subpart V	BENZENE	31-Oct-16	12-Nov-16	ARAN PARKER
COKE	BLK105b	Valve	Externally Actuated	Light Liquid	Accessible	FALSE	522	1" TAR LEVEL VALVES FINAL COOLER W/1FL & 3WC	095	1	Yes, equipment can be isolated from service	TRUE	FALSE	FALSE	40 CFR 61 Subpart V	BENZENE	31-Oct-16	12-Nov-16	ARAN PARKER
COKE	BLK105c	Valve	Externally Actuated	Light Liquid	Accessible	FALSE	523	1" TAR LEVEL VALVES FINAL COOLER W/1FL & 3WC	095	1	Yes, equipment can be isolated from service	TRUE	FALSE	FALSE	40 CFR 61 Subpart V	BENZENE	31-Oct-16	29-Nov-16	ARAN PARKER
COKE	BLK106	Flange	Standard Service	Light Liquid	Accessible	FALSE	442	MANHOLE FINAL COOLER W/1FL, 3WC & 1SC	1P3	36	Yes, equipment can be isolated from service	TRUE	FALSE	FALSE	40 CFR 61 Subpart V	BENZENE	31-Oct-16	12-Nov-16	ARAN PARKER
COKE	BLK107	Flange	Standard Service	Light Liquid	Accessible	FALSE	441	MANHOLE FINAL COOLER W/1FL, 3WC & 1SC	01P3	36	Yes, equipment can be isolated from service	TRUE	FALSE	FALSE	40 CFR 61 Subpart V	BENZENE	31-Oct-16	12-Nov-16	ARAN PARKER
COKE	BLK108	Flange	Standard Service	Light Liquid	Accessible	FALSE	440	MANHOLE FINAL COOLER W/1FL, 3WC & 1SC	1P3	36	Yes, equipment can be isolated from service	TRUE	FALSE	FALSE	40 CFR 61 Subpart V	BENZENE	31-Oct-16	12-Nov-16	ARAN PARKER
COKE	BLK109	Flange	Standard Service	Light Liquid	Accessible	FALSE	439	MANHOLE FINAL COOLER W/1FL, 3WC & 1SC	1P3	36	Yes, equipment can be isolated from service	TRUE	FALSE	FALSE	40 CFR 61 Subpart V	BENZENE	31-Oct-16	12-Nov-16	ARAN PARKER
COKE	BLK11	Valve	Externally Actuated	Light Liquid	Accessible	FALSE	267	VRL @ LIGHT OIL LOADING STATION 1ST LEVEL W/2FL & 3WC	13	2	Yes, equipment can be isolated from service	TRUE	FALSE	FALSE	40 CFR 61 Subpart V	BENZENE	31-Oct-16	16-Nov-16	Matt Case
COKE	BLK110	Valve	Externally Actuated	Light Liquid	Accessible	FALSE	524	14" VALVE FINAL COOLER GAS INLET W/3FL & 11WC	2P3	14	Yes, equipment can be isolated from service	TRUE	FALSE	FALSE	40 CFR 61 Subpart V	BENZENE	31-Oct-16	12-Nov-16	ARAN PARKER
COKE	BLK111	Valve	Externally Actuated	Light Liquid	Accessible	FALSE	525	4" VALVE FINAL COOLER GAS INLET W/2FL & 5WC	2P5	3	Yes, equipment can be isolated from service	TRUE	FALSE	FALSE	40 CFR 61 Subpart V	BENZENE	31-Oct-16	12-Nov-16	ARAN PARKER
COKE	BLK112	Valve	Externally Actuated	Light Liquid	Accessible	FALSE	526	6" VALVE @ FINAL COOLER INLET W/3FL & 9WC	2P5	3	Yes, equipment can be isolated from service	TRUE	FALSE	FALSE	40 CFR 61 Subpart V	BENZENE	31-Oct-16	12-Nov-16	ARAN PARKER
COKE	BLK113	Flange	Standard Service	Light Liquid	Accessible	FALSE	527	MANHOLE FINAL COOLER W/3FL & 6WC	3P1	36	Yes, equipment can be isolated from service	TRUE	FALSE	FALSE	40 CFR 61 Subpart V	BENZENE	31-Oct-16	12-Nov-16	ARAN PARKER
COKE	BLK114	Flange	Standard Service	Light Liquid	Accessible	FALSE	528	GAS LINE @ FINAL COOLER W/4FL & 15WC	3P2	6	Yes, equipment can be isolated from service	TRUE	FALSE	FALSE	40 CFR 61 Subpart V	BENZENE	31-Oct-16	12-Nov-16	ARAN PARKER
COKE	BLK115	Valve	Externally Actuated	Light Liquid	Accessible	FALSE	529	14" VALVE GAS LINE @ FINAL COOLER	3P5	14	Yes, equipment can be isolated from service	TRUE	FALSE	FALSE	40 CFR 61 Subpart V	BENZENE	31-Oct-16	01-Dec-16	ARAN PARKER
COKE	BLK116	Flange	Standard Service	Light Liquid	Accessible	FALSE	530	MANHOLE FINAL COOLER 4TH LEVEL W/1FL, 4WC & 1SC	33	36	Yes, equipment can be isolated from service	TRUE	FALSE	FALSE	40 CFR 61 Subpart V	BENZENE	31-Oct-16	01-Dec-16	ARAN PARKER
COKE	BLK117	Valve	Externally Actuated	Light Liquid	Accessible	FALSE	531	14" VALVE FINAL COOLER 4TH LEVEL	31	14	Yes, equipment can be isolated from service	TRUE	FALSE	FALSE	40 CFR 61 Subpart V	BENZENE	31-Oct-16	01-Dec-16	ARAN PARKER
COKE	BLK118	Valve	Externally Actuated	Light Liquid	Accessible	FALSE	532	14" VALVE FINAL COOLER 5TH LEVEL W/1FL & 2WC	41	14	Yes, equipment can be isolated from service	TRUE	FALSE	FALSE	40 CFR 61 Subpart V	BENZENE	31-Oct-16	13-Jan-17	ARAN PARKER
COKE	BLK119	Valve	Externally Actuated	Light Liquid	Accessible	FALSE	533	(2) 6" VALVES FINAL COOLER 5TH LEVEL W/6FL & 13WC	52	6	Yes, equipment can be isolated from service	TRUE	FALSE	FALSE	40 CFR 61 Subpart V	BENZENE	31-Oct-16	29-Nov-16	ARAN PARKER
COKE	BLK119A	Valve	Externally Actuated	Light Liquid	Accessible	FALSE	535	(2) 6" VALVES FINAL COOLER 5TH LEVEL W/6FL & 13WC	52	6	Yes, equipment can be isolated from service	TRUE	FALSE	FALSE	40 CFR 61 Subpart V	BENZENE	01-Dec-16	01-Dec-16	ARAN PARKER
COKE	BLK12	Valve	Externally Actuated	Light Liquid	Accessible	FALSE	144	2" VALVE VRL @ LIGHT OIL LOADING STATION W/2FL, 1WC & 1SC	05	2	Yes, equipment can be isolated from service	TRUE	FALSE	FALSE	40 CFR 61 Subpart V	BENZENE	31-Oct-16	16-Nov-16	ARAN PARKER
COKE	BLK120	Flange	Standard Service	Light Liquid	Accessible	FALSE	537	MANHOLE FINAL COOLER 6TH LEVEL W/3WC	52	36	Yes, equipment can be isolated from service	TRUE	FALSE	FALSE	40 CFR 61 Subpart V	BENZENE	31-Oct-16	29-Nov-16	ARAN PARKER
COKE	BLK121	Flange	Standard Service	Light Liquid	Accessible	FALSE	536	LIQUOR LINE @ FINAL COOLER 6TH LEVEL W/1FL & 11WC	55	0	Yes, equipment can be isolated from service	TRUE	FALSE	FALSE	40 CFR 61 Subpart V	BENZENE	31-Oct-16	29-Nov-16	ARAN PARKER
COKE	BLK122	Flange	Standard Service	Light Liquid	Accessible	FALSE	538	GAS LINE @ FINAL COOLER 6TH LEVEL	53	36	Yes, equipment can be isolated from service	TRUE	FALSE	FALSE	40 CFR 61 Subpart V	BENZENE	31-Oct-16	01-Dec-16	ARAN PARKER
COKE	BLK123	Valve	Externally Actuated	Light Liquid	Accessible	FALSE	539	GAS LINE @ FINAL COOLER 7TH LEVEL W/1WC	63	36	Yes, equipment can be isolated from service	TRUE	FALSE	FALSE	40 CFR 61 Subpart V	BENZENE	31-Oct-16	01-Dec-16	ARAN PARKER
COKE	BLK124	Flange	Standard Service	Light Liquid	Accessible	FALSE	540	MANHOLE FINAL COOLER 8TH LEVEL W/2WC	66	36	Yes, equipment can be isolated from service	TRUE	FALSE	FALSE	40 CFR 61 Subpart V	BENZENE	31-Oct-16	01-Dec-16	ARAN PARKER
COKE	BLK125	Flange	Standard Service	Light Liquid	Accessible	FALSE	543	GAS OUTLET FINAL COOLER 8TH LEVEL W/2FL & 12WC	74	24	Yes, equipment can be isolated from service	TRUE	FALSE	FALSE	40 CFR 61 Subpart V	BENZENE	31-Oct-16	01-Dec-16	ARAN PARKER
COKE	BLK126	Flange	Standard Service	Light Liquid	Accessible	FALSE	542	MANHOLE FINAL COOLER 9TH LEVEL W/1FL, 3WC & 1SC	72	36	Yes, equipment can be isolated from service	TRUE	FALSE	FALSE	40 CFR 61 Subpart V	BENZENE	31-Oct-16	01-Dec-16	ARAN PARKER
COKE	BLK127	Valve	Externally Actuated	Light Liquid	Accessible	FALSE	562	3" VALVE FINAL COOLER TOP CONTACT WATER INLET W/7FL & 16WC	55	3	Yes, equipment can be isolated from service	TRUE	FALSE	FALSE	40 CFR 61 Subpart V	BENZENE	31-Oct-16	29-Nov-16	ARAN PARKER
COKE	BLK128	Valve	Externally Actuated	Light Liquid	Accessible	FALSE	569	3" & ½" VALVES FINAL COOLER TOP CONTACT WATER INLET W/3FL, 9	56	3	Yes, equipment can be isolated from service	TRUE	FALSE	FALSE	40 CFR 61 Subpart V	BENZENE	31-Oct-16	29-Nov-16	ARAN PARKER
COKE	BLK128a	Valve	Externally Actuated	Light Liquid	Accessible	FALSE	570	½" VALVES FINAL COOLER TOP CONTACT WATER INLET W/3FL, 9WC &	55	0.5	Yes, equipment can be isolated from service	TRUE	FALSE	FALSE	40 CFR 61 Subpart V	BENZENE	31-Oct-16	29-Nov-16	ARAN PARKER
COKE	BLK129	Valve	Externally Actuated	Light Liquid	Accessible	FALSE	560	3" & 2 ½" VALVES FINAL COOLER TOP CONTACT WATER INLET W/4FL,	55	3	Yes, equipment can be isolated from service	TRUE	FALSE	FALSE	40 CFR 61 Subpart V	BENZENE	31-Oct-16	01-Dec-16	ARAN PARKER
COKE	BLK129a	Valve	Externally Actuated	Light Liquid	Accessible	FALSE	561	2 ½" VALVES FINAL COOLER TOP CONTACT WATER INLET W/4FL, 22WC	55	0.5	Yes, equipment can be isolated from service	TRUE	FALSE	FALSE	40 CFR 61 Subpart V	BENZENE	31-Oct-16	01-Dec-16	ARAN PARKER
COKE	BLK130	Valve	Externally Actuated	Light Liquid	Accessible	FALSE	545	3" & ½" VALVES FINAL COOLER TOP CONTACT WATER INLET W/3FL, 9	55	3	Yes, equipment can be isolated from service	TRUE	FALSE	FALSE	40 CFR 61 Subpart V	BENZENE	31-Oct-16	01-Dec-16	ARAN PARKER
COKE	BLK130a	Valve	Externally Actuated	Light Liquid	Accessible	FALSE	546	½" VALVES FINAL COOLER TOP CONTACT WATER INLET W/3FL, 9WC &	55	0.5	Yes, equipment can be isolated from service	TRUE	FALSE	FALSE	40 CFR 61 Subpart V	BENZENE	31-Oct-16	01-Dec-16	ARAN PARKER
COKE	BLK131	Valve	Externally Actuated	Light Liquid	Accessible	FALSE	547	3" & 2 ½" VALVES FINAL COOLER TOP CONTACT WATER INLET W/4FL,	55	3	Yes, equipment can be isolated from service	TRUE	FALSE	FALSE	40 CFR 61 Subpart V	BENZENE	31-Oct-16	01-Dec-16	ARAN PARKER
COKE	BLK131a	Valve	Externally Actuated	Light Liquid	Accessible	FALSE	548	2 ½" VALVES FINAL COOLER TOP CONTACT WATER INLET W/4FL, 22W	55	0.5	Yes, equipment can be isolated from service	TRUE	FALSE	FALSE	40 CFR 61 Subpart V	BENZENE	31-Oct-16	01-Dec-16	ARAN PARKER
COKE	BLK132	Valve	Externally Actuated	Light Liquid	Accessible	FALSE	552	3" & ½" VALVES FINAL COOLER TOP CONTACT WATER INLET W/3FL, 9	53	3	Yes, equipment can be isolated from service	TRUE	FALSE	FALSE	40 CFR 61 Subpart V	BENZENE	31-Oct-16	01-Dec-16	ARAN PARKER
COKE	BLK132a	Valve	Externally Actuated	Light Liquid	Accessible	FALSE	553	½" VALVES FINAL COOLER TOP CONTACT WATER INLET W/3FL, 9WC &	53	0.5	Yes, equipment can be isolated from service	TRUE	FALSE	FALSE	40 CFR 61 Subpart V	BENZENE	31-Oct-16	01-Dec-16	ARAN PARKER
COKE	BLK133	Valve	Externally Actuated	Light Liquid	Accessible	FALSE	549	3" & ½" VALVES FINAL COOLER TOP CONTACT WATER INLET W/4FL, 2	53	3	Yes, equipment can be isolated from service	TRUE	FALSE	FALSE	40 CFR 61 Subpart V	BENZENE	31-Oct-16	01-Dec-16	ARAN PARKER
COKE	BLK133a	Valve	Externally Actuated	Light Liquid	Accessible	FALSE	550	½" VALVES FINAL COOLER TOP CONTACT WATER INLET W/4FL, 22WC &	54	0.5	Yes, equipment can be isolated from service	TRUE	FALSE	FALSE	40 CFR 61 Subpart V	BENZENE	31-Oct-16	01-Dec-16	ARAN PARKER
COKE	BLK134	Valve	Externally Actuated	Light Liquid	Accessible	FALSE	554	3" & 2 ½" VALVES FINAL COOLER TOP CONTACT WATER INLET W/3FL,	55	3	Yes, equipment can be isolated from service	TRUE	FALSE	FALSE	40 CFR 61 Subpart V	BENZENE	31-Oct-16	01-Dec-16	ARAN PARKER
COKE	BLK134a	Valve	Externally Actuated	Light Liquid	Accessible	FALSE	555	2 ½" VALVES FINAL COOLER TOP CONTACT WATER INLET W/3FL, 9WC	54	0.5	Yes, equipment can be isolated from service	TRUE	FALSE	FALSE	40 CFR 61 Subpart V	BENZENE	31-Oct-16	01-Dec-16	ARAN PARKER
COKE	BLK135	Valve	Externally Actuated	Light Liquid	Accessible	FALSE	556	3" & ½" VALVES FINAL COOLER TOP CONTACT WATER INLET W/ 4FL,	56	3	Yes, equipment can be isolated from service	TRUE	FALSE	FALSE	40 CFR 61 Subpart V	BENZENE	31-Oct-16	01-Dec-16	ARAN PARKER
COKE	BLK135a	Valve	Externally Actuated	Light Liquid	Accessible	FALSE	557	½" VALVES FINAL COOLER TOP CONTACT WATER INLET W/ 4FL, 22WC	56	0.5	Yes, equipment can be isolated from service	TRUE	FALSE	FALSE	40 CFR 61 Subpart V	BENZENE	31-Oct-16	01-Dec-16	ARAN PARKER
COKE	BLK136	Valve	Externally Actuated	Light Liquid	Accessible	FALSE	558	3" & ½" VALVES FINAL COOLER TOP CONTACT WATER INLET W/3FL, 9	56	3	Yes, equipment can be isolated from service	TRUE	FALSE	FALSE	40 CFR 61 Subpart V	BENZENE	31-Oct-16	01-Dec-16	ARAN PARKER
COKE	BLK136a	Valve	Externally Actuated	Light Liquid	Accessible	FALSE	559	½" VALVES FINAL COOLER TOP CONTACT WATER INLET W/3FL, 9WC &	50	1	Yes, equipment can be isolated from service	TRUE	FALSE	FALSE	40 CFR 61 Subpart V	BENZENE	31-Oct-16	01-Dec-16	Andrew Ficher
COKE	BLK137	Valve	Externally Actuated	Light Liquid	Accessible	FALSE	565	3" & 2 ½" VALVES FINAL COOLER TOP CONTACT WATER INLET W/4FL,	55	3	Yes, equipment can be isolated from service	TRUE	FALSE	FALSE	40 CFR 61 Subpart V	BENZENE	31-Oct-16	01-Dec-16	ARAN PARKER
COKE	BLK137a	Valve	Externally Actuated	Light Liquid	Accessible	FALSE	566	2 ½" VALVES FINAL COOLER TOP CONTACT WATER INLET W/4FL, 9WC	55	0.5	Yes, equipment can be isolated from service	TRUE	FALSE	FALSE	40 CFR 61 Subpart V	BENZENE	31-Oct-16	01-Dec-16	ARAN PARKER
COKE	BLK138	Valve	Externally Actuated	Light Liquid	Accessible	FALSE	574	3" & ½" VALVES FINAL COOLER TOP CONTACT WATER INLET W/3FL, 9	55	3	Yes, equipment can be isolated from service	TRUE	FALSE	FALSE	40 CFR 61 Subpart V	BENZENE	31-Oct-16	01-Dec-16	ARAN PARKER
COKE	BLK138a	Valve	Externally Actuated	Light Liquid	Accessible	FALSE	575	½" VALVES FINAL COOLER TOP CONTACT WATER INLET W/3FL, 9WC &	55	0.5	Yes, equipment can be isolated from service	TRUE	FALSE	FALSE	40 CFR 61 Subpart V	BENZENE	31-Oct-16	01-Dec-16	ARAN PARKER
COKE	BLK139	Valve	Externally Actuated	Light Liquid	Accessible	FALSE	576	3" & 2 ½" VALVES FINAL COOLER TOP CONTACT WATER INLET W/4FL,	55	3	Yes, equipment can be isolated from service	TRUE	FALSE	FALSE	40 CFR 61 Subpart V	BENZENE	31-Oct-16	01-Dec-16	ARAN PARKER
COKE	BLK139a	Valve	Externally Actuated	Light Liquid	Accessible	FALSE	577	2 ½" VALVES FINAL COOLER TOP CONTACT WATER INLET W/4FL, 22W	55	0.5	Yes, equipment can be isolated from service	TRUE	FALSE	FALSE	40 CFR 61 Subpart V	BENZENE	31-Oct-16	01-Dec-16	ARAN PARKER
COKE	BLK14	Valve	Externally Actuated	Light Liquid	Accessible	FALSE	255	3" VALVE LIGHT OIL LOADING LINE FROM PUMPS W/2FL & 2WC	04	6	Yes, equipment can be isolated from service	TRUE	FALSE	FALSE	40 CFR 61 Subpart V	BENZENE	31-Oct-16	16-Nov-16	ARAN PARKER
COKE	BLK140	Valve	Externally Actuated	Light Liquid	Accessible	FALSE	567	3" & ½" VALVES FINAL COOLER TOP CONTACT WATER INLET W/3FL, 9	55	3	Yes, equipment can be isolated from service	TRUE	FALSE	FALSE	40 CFR 61 Subpart V	BENZENE	31-Oct-16	01-Dec-16	ARAN PARKER
COKE	BLK140a	Valve	Externally Actuated	Light Liquid	Accessible	FALSE	568	½" VALVES FINAL COOLER TOP CONTACT WATER INLET W/3FL, 9WC &	55	0.5	Yes, equipment can be isolated from service	TRUE	FALSE	FALSE	40 CFR 61 Subpart V	BENZENE	31-Oct-16	01-Dec-16	ARAN PARKER
COKE	BLK141	Valve	Externally Actuated	Light Liquid	Accessible	FALSE	563	3" & ½" VALVES FINAL COOLER TOP CONTACT WATER INLET W/3FL 9W	55	3	Yes, equipment can be isolated from service	TRUE	FALSE	FALSE	40 CFR 61 Subpart V	BENZENE	31-Oct-16	01-Dec-16	ARAN PARKER
COKE	BLK141a	Valve	Externally Actuated	Light Liquid	Accessible	FALSE	564	½" VALVES FINAL COOLER TOP CONTACT WATER INLET W/3FL 9WC &	55	0.5	Yes, equipment can be isolated from service	TRUE	FALSE	FALSE	40 CFR 61 Subpart V	BENZENE	31-Oct-16	01-Dec-16	ARAN PARKER
COKE	BLK142	Valve	Externally Actuated	Light Liquid	Accessible	FALSE	571	3" & ½" VALVES FINAL COOLER TOP CONTACT WATER INLET W/3FL, 9	55	3	Yes, equipment can be isolated from service	TRUE	FALSE	FALSE	40 CFR 61 Subpart V	BENZENE	31-Oct-16	01-Dec-16	ARAN PARKER
COKE	BLK142a	Valve	Externally Actuated	Light Liquid	Accessible	FALSE	572	½" VALVES FINAL COOLER TOP CONTACT WATER INLET W/3FL, 9WC &	55	0.5	Yes, equipment can be isolated from service	TRUE	FALSE	FALSE	40 CFR 61 Subpart V	BENZENE	31-Oct-16	01-Dec-16	ARAN PARKER
COKE	BLK143	Flange	Standard Service	Light Liquid	Accessible	FALSE	573	FINAL COOLER TOP W/2FL, 6WC & 1SC	50	36	Yes, equipment can be isolated from service	TRUE	FALSE	FALSE	40 CFR 61 Subpart V	BENZENE	31-Oct-16	01-Dec-16	ARAN PARKER
COKE	BLK144	Flange	Standard Service	Light Liquid	Accessible	FALSE	544	GAS LINE OUTLET FINAL COOLER TOP W/1FL, 5WC & 1SC	83	24	Yes, equipment can be isolated from service	TRUE	FALSE	FALSE	40 CFR 61 Subpart V	BENZENE	31-Oct-16	01-Dec-16	ARAN PARKER
COKE	BLK145	Valve	Externally Actuated	Light Liquid	Accessible	FALSE	551	4" VALVE FINAL COOLER TOP W/3FL & 5WC	52	4	Yes, equipment can be isolated from service	TRUE	FALSE	FALSE	40 CFR 61 Subpart V	BENZENE	31-Oct-16	01-Dec-16	ARAN PARKER
COKE	BLK146	Valve	Externally Actuated	Light Liquid	Accessible	FALSE	510	14" VALVE FINAL COOLER 3RD LEVEL W/2FL & 2WC	1P0	14	Yes, equipment can be isolated from service	TRUE	FALSE	FALSE	40 CFR 61 Subpart V	BENZENE	31-Oct-16	01-Dec-16	ARAN PARKER

UNIT_CODE	TAG_ NUMBER	EQUITYPE _DESC	CONFIG_DESC	SERVICE_DESC	ACCESS_DESC	CLOSED_VENT _SYSTEM	ROUTE	LOCATION	LEVEL	SIZE	IFSTYPE_DESC	ATTEMPT _ALLOWED	UNDER_300_ HOURS_SERVICE	POTENTIAL _OPEN_END	GROUP_DESC	PRODUCT_DESC	DATE_ADDED	DATE_IN_SERVICE	TECH_DESC
COKE	BLK203	Valve	Externally Actuated	Light Liquid	Accessible	FALSE	380	3" VALVE GBL WASH OIL DECANTER TOP W/4FL & 7WC	1P0	3	Yes, equipment can be isolated from service	TRUE	FALSE	FALSE	40 CFR 61 Subpart V	BENZENE	31-Oct-16	29-Nov-16	ARAN PARKER
COKE	BLK204	Valve	Externally Actuated	Light Liquid	Accessible	FALSE	381	AUTO VALVE GBL TO WASH OIL PUMPING TANK W/1FL & 1WC	1P0	3	Yes, equipment can be isolated from service	TRUE	FALSE	FALSE	40 CFR 61 Subpart V	BENZENE	31-Oct-16	29-Nov-16	ARAN PARKER
COKE	BLK205	Valve	Externally Actuated	Light Liquid	Accessible	FALSE	374	6" VALVE GBL @ WASH OIL DECANTER TOP W/2FL & 2WC	1P7	6	Yes, equipment can be isolated from service	TRUE	FALSE	FALSE	40 CFR 61 Subpart V	BENZENE	31-Oct-16	29-Nov-16	ARAN PARKER
COKE	BLK206	Valve	Externally Actuated	Light Liquid	Accessible	FALSE	373	½" & AUTO VALVE GBL @ WASH OIL DECANTER TOP W/1FL, 3WC & 8S	1P4	0.5	Yes, equipment can be isolated from service	TRUE	FALSE	FALSE	40 CFR 61 Subpart V	BENZENE	31-Oct-16	29-Nov-16	ARAN PARKER
COKE	BLK206A	Valve	Externally Actuated	Light Liquid	Accessible	FALSE	378	½" & AUTO VALVE GBL @ WASH OIL DECANTER TOP W/1FL, 3WC & 8S	1P4	6	Yes, equipment can be isolated from service	TRUE	FALSE	FALSE	40 CFR 61 Subpart V	BENZENE	01-Dec-16	01-Dec-16	ARAN PARKER
COKE	BLK206B	Valve	Externally Actuated	Light Liquid	Accessible	FALSE	379	½" & AUTO VALVE GBL @ WASH OIL DECANTER TOP W/1FL, 3WC & 8S	1P4	6	Yes, equipment can be isolated from service	TRUE	FALSE	FALSE	40 CFR 61 Subpart V	BENZENE	01-Dec-16	01-Dec-16	ARAN PARKER
COKE	BLK207	Valve	Externally Actuated	Light Liquid	Accessible	FALSE	334	MANHOLE WASH OIL PUMPING TANK TOP W/1FL & 2WC	1P0	0.5	Yes, equipment can be isolated from service	TRUE	FALSE	FALSE	40 CFR 61 Subpart V	BENZENE	31-Oct-16	29-Nov-16	ARAN PARKER
COKE	BLK208	Valve	Externally Actuated	Light Liquid	Accessible	FALSE	335	PVRV WASH OIL PUMPING TANK TOP W/1FL & 4WC	1P0	6	Yes, equipment can be isolated from service	TRUE	FALSE	FALSE	40 CFR 61 Subpart V	BENZENE	31-Oct-16	29-Nov-16	ARAN PARKER
COKE	BLK209	Valve	Externally Actuated	Light Liquid	Accessible	FALSE	336	MANHOLE WASH OIL PUMPING TANK TOP W/1FL & 2WC	1P0	16	Yes, equipment can be isolated from service	TRUE	FALSE	FALSE	40 CFR 61 Subpart V	BENZENE	31-Oct-16	29-Nov-16	ARAN PARKER
COKE	BLK21	Valve	Externally Actuated	Light Liquid	Accessible	FALSE	245	½" VALVE & GAUGE LIGHT OIL LOADING LINE FROM PUMPS W/1FL, 5W	00	0.5	Yes, equipment can be isolated from service	TRUE	FALSE	FALSE	40 CFR 61 Subpart V	BENZENE	31-Oct-16	16-Nov-16	ARAN PARKER
COKE	BLK212	Valve	Externally Actuated	Light Liquid	Accessible	FALSE	419	GBL @ PROCESS WATER DECANTER	00	1	Yes, equipment can be isolated from service	TRUE	FALSE	FALSE	40 CFR 61 Subpart V	BENZENE	31-Oct-16	01-Dec-16	ARAN PARKER
COKE	BLK213	Valve	Externally Actuated	Light Liquid	Accessible	FALSE	415	4" VALVE GBL @ PROCESS WATER DECANTER W/2FL & 1WC	01	4	Yes, equipment can be isolated from service	TRUE	FALSE	FALSE	40 CFR 61 Subpart V	BENZENE	31-Oct-16	29-Nov-16	ARAN PARKER
COKE	BLK214	Flange	Standard Service	Light Liquid	Accessible	FALSE	413	MANHOLE PROCESS WATER DECANTER TOP W/2FL & 2WC	11	36	Yes, equipment can be isolated from service	TRUE	FALSE	FALSE	40 CFR 61 Subpart V	BENZENE	31-Oct-16	12-Dec-16	ARAN PARKER
COKE	BLK215	Valve	Externally Actuated	Light Liquid	Accessible	FALSE	410	10" VALVE PROCESS WATER DECANTER TOP W/2FL	10	10	Yes, equipment can be isolated from service	TRUE	FALSE	FALSE	40 CFR 61 Subpart V	BENZENE	31-Oct-16	29-Nov-16	ARAN PARKER
COKE	BLK216	Valve	Externally Actuated	Light Liquid	Accessible	FALSE	411	10" VALVE PROCESS WATER DECANTER TOP W/2FL	10	10	Yes, equipment can be isolated from service	TRUE	FALSE	FALSE	40 CFR 61 Subpart V	BENZENE	31-Oct-16	29-Nov-16	ARAN PARKER
COKE	BLK217	Valve	Externally Actuated	Light Liquid	Accessible	FALSE	407	1 ½" VALVE PROCESS WATER DECANTER TOP W/1FL, 2WC & 12SC	10	0	Yes, equipment can be isolated from service	TRUE	FALSE	FALSE	40 CFR 61 Subpart V	BENZENE	31-Oct-16	29-Nov-16	ARAN PARKER
COKE	BLK218	Valve	Externally Actuated	Light Liquid	Accessible	FALSE	408	VALVE PROCESS WATER DECANTER TOP W/1FL	11	6	Yes, equipment can be isolated from service	TRUE	FALSE	FALSE	40 CFR 61 Subpart V	BENZENE	31-Oct-16	29-Nov-16	ARAN PARKER
COKE	BLK219	Valve	Externally Actuated	Light Liquid	Accessible	FALSE	409	MANHOLE PROCESS WATER DECANTER TOP W/2FL	00	0	Yes, equipment can be isolated from service	TRUE	FALSE	FALSE	40 CFR 61 Subpart V	BENZENE	31-Oct-16	29-Nov-16	ARAN PARKER
COKE	BLK22	Valve	Externally Actuated	Light Liquid	Accessible	FALSE	232	1" VALVE @ LIGHT OIL LOADING PUMP W/2FL, 8WC & 3SC	05	0.8	Yes, equipment can be isolated from service	TRUE	FALSE	FALSE	40 CFR 61 Subpart V	BENZENE	31-Oct-16	16-Nov-16	ARAN PARKER
COKE	BLK220	Valve	Externally Actuated	Light Liquid	Accessible	FALSE	412	MANHOLE PROCESS WATER DECANTER TOP W/2FL	00	0	Yes, equipment can be isolated from service	TRUE	FALSE	FALSE	40 CFR 61 Subpart V	BENZENE	31-Oct-16	29-Nov-16	ARAN PARKER
COKE	BLK221	Pressure Relief	Standard Service	Light Liquid	Accessible	FALSE	417	PVRV PROCESS WATER DECANTER TOP W/1FL & 1WC	10	0	Yes, equipment can be isolated from service	TRUE	FALSE	FALSE	40 CFR 61 Subpart V	BENZENE	31-Oct-16	29-Nov-16	ARAN PARKER
COKE	BLK223	Flange	Standard Service	Vapor	Accessible	FALSE	127	NORTH EXHAUSTER	13	3	Yes, equipment can be isolated from service	TRUE	FALSE	FALSE	40 CFR 61 Subpart V	BENZENE	31-Oct-16	30-Nov-16	ARAN PARKER
COKE	BLK224	Flange	Standard Service	Light Liquid	Accessible	FALSE	126	SOUTH EXHAUSTER	13	3	Yes, equipment can be isolated from service	TRUE	FALSE	FALSE	40 CFR 61 Subpart V	BENZENE	31-Oct-16	30-Nov-16	ARAN PARKER
COKE	BLK225	Valve	Externally Actuated	Light Liquid	Accessible	FALSE	619.001	LIGHT REFLUX PUMP SUCTION LINE	01	0.8	Yes, equipment can be isolated from service	TRUE	FALSE	FALSE	40 CFR 61 Subpart V	BENZENE	31-Oct-16	29-Nov-16	Matt Case
COKE	BLK226	Valve	Externally Actuated	Light Liquid	Accessible	FALSE	621	4" VALVE BTX TANK TO PUMPS W/3FL & 4WC	04	4	Yes, equipment can be isolated from service	TRUE	FALSE	FALSE	40 CFR 61 Subpart V	BENZENE	31-Oct-16	29-Nov-16	ARAN PARKER
COKE	BLK227	Valve	Externally Actuated	Light Liquid	Accessible	FALSE	619	3" VALVE REFLUX PUMPS INLET W/2FL & 6WC	03	3	Yes, equipment can be isolated from service	TRUE	FALSE	FALSE	40 CFR 61 Subpart V	BENZENE	31-Oct-16	29-Nov-16	Matt Case
COKE	BLK228	Valve	Externally Actuated	Light Liquid	Accessible	FALSE	603	¾" VALVE & PRESSURE GAUGE @ REFLUX PUMPS OUTLET W/2FL, 3WC &	03	0.8	Yes, equipment can be isolated from service	TRUE	FALSE	FALSE	40 CFR 61 Subpart V	BENZENE	31-Oct-16	29-Nov-16	ARAN PARKER
COKE	BLK229	Valve	Externally Actuated	Light Liquid	Accessible	FALSE	604	3" VALVE @ REFLUX PUMPS OUTLET W/3FL & 2WC	04	3	Yes, equipment can be isolated from service	TRUE	FALSE	FALSE	40 CFR 61 Subpart V	BENZENE	31-Oct-16	29-Nov-16	ARAN PARKER
COKE	BLK23	Valve	Externally Actuated	Light Liquid	Accessible	FALSE	234	2" VALVE @ LIGHT OIL LOADING PUMP W/2FL & 3WC	00	2	Yes, equipment can be isolated from service	TRUE	FALSE	FALSE	40 CFR 61 Subpart V	BENZENE	31-Oct-16	16-Nov-16	ARAN PARKER
COKE	BLK230	Pump	Standard Service	Light Liquid	Accessible	FALSE	602	NORTH REFLUX PUMP	02	0	Yes, equipment can be isolated from service	TRUE	FALSE	FALSE	40 CFR 61 Subpart V	BENZENE	31-Oct-16	29-Nov-16	ARAN PARKER
COKE	BLK231	Valve	Externally Actuated	Light Liquid	Accessible	FALSE	606	3" VALVE @ REFLUX PUMPS W/2FL & 5WC	05	3	Yes, equipment can be isolated from service	TRUE	FALSE	FALSE	40 CFR 61 Subpart V	BENZENE	31-Oct-16	29-Nov-16	ARAN PARKER
COKE	BLK232	Valve	Externally Actuated	Light Liquid	Accessible	FALSE	605	3" VALVE @ REFLUX PUMPS W/2FL & 3WC	05	3	Yes, equipment can be isolated from service	TRUE	FALSE	FALSE	40 CFR 61 Subpart V	BENZENE	31-Oct-16	29-Nov-16	ARAN PARKER
COKE	BLK233	Valve	Externally Actuated	Light Liquid	Accessible	FALSE	598	3" VALVE @ REFLUX PUMPS W/2FL & 4WC	05	3	Yes, equipment can be isolated from service	TRUE	FALSE	FALSE	40 CFR 61 Subpart V	BENZENE	31-Oct-16	29-Nov-16	ARAN PARKER
COKE	BLK234	Valve	Externally Actuated	Light Liquid	Accessible	FALSE	597	3" VALVE @ REFLUX PUMPS W/2FL & 7WC	07	3	Yes, equipment can be isolated from service	TRUE	FALSE	FALSE	40 CFR 61 Subpart V	BENZENE	31-Oct-16	29-Nov-16	ARAN PARKER
COKE	BLK235	Pump	Standard Service	Light Liquid	Accessible	FALSE	601	SOUTH REFLUX PUMP	02	0	Yes, equipment can be isolated from service	TRUE	FALSE	FALSE	40 CFR 61 Subpart V	BENZENE	31-Oct-16	29-Nov-16	ARAN PARKER
COKE	BLK236	Valve	Externally Actuated	Light Liquid	Accessible	FALSE	599	3" VALVE SOUTH REFLUX PUMP OUTLET W/2FL & 6WC	04	3	Yes, equipment can be isolated from service	TRUE	FALSE	FALSE	40 CFR 61 Subpart V	BENZENE	31-Oct-16	29-Nov-16	ARAN PARKER
COKE	BLK237	Valve	Externally Actuated	Light Liquid	Accessible	FALSE	600	½" VALVE & PRESSURE GAUGE SOUTH REFLUX PUMP OUTLET W/2FL, 4W	02	0.5	Yes, equipment can be isolated from service	TRUE	FALSE	FALSE	40 CFR 61 Subpart V	BENZENE	31-Oct-16	29-Nov-16	ARAN PARKER
COKE	BLK238	Valve	Externally Actuated	Light Liquid	Accessible	FALSE	620	3" VALVE SOUTH REFLUX PUMP INLET W/2FL & 3WC	03	3	Yes, equipment can be isolated from service	TRUE	FALSE	FALSE	40 CFR 61 Subpart V	BENZENE	31-Oct-16	29-Nov-16	ARAN PARKER
COKE	BLK239	Valve	Externally Actuated	Light Liquid	Accessible	FALSE	618	¾" VALVE NORTH REFLUX PUMP INLET W/1WC & 7SC	01	0.5	Yes, equipment can be isolated from service	TRUE	FALSE	FALSE	40 CFR 61 Subpart V	BENZENE	31-Oct-16	29-Nov-16	ARAN PARKER
COKE	BLK24	Valve	Externally Actuated	Light Liquid	Accessible	FALSE	235	½" VALVE @ LIGHT OIL LOADING PUMP W/4WC & 4SC	03	0.5	Yes, equipment can be isolated from service	TRUE	FALSE	FALSE	40 CFR 61 Subpart V	BENZENE	31-Oct-16	16-Nov-16	ARAN PARKER
COKE	BLK240	Valve	Externally Actuated	Light Liquid	Accessible	FALSE	616	½" VALVE SOUTH REFLUX PUMP INLET W/1WC & 5SC	02	0.5	Yes, equipment can be isolated from service	TRUE	FALSE	FALSE	40 CFR 61 Subpart V	BENZENE	31-Oct-16	29-Nov-16	ARAN PARKER
COKE	BLK241	Valve	Externally Actuated	Light Liquid	Accessible	FALSE	617	½" VALVE SOUTH REFLUX PUMP INLET W/1WC & 2SC	01	0.5	Yes, equipment can be isolated from service	TRUE	FALSE	FALSE	40 CFR 61 Subpart V	BENZENE	31-Oct-16	29-Nov-16	ARAN PARKER
COKE	BLK242	Valve	Externally Actuated	Light Liquid	Accessible	FALSE	615	2" VALVE FROM REFLUX PUMPS @ T-702 CRUDE RES. COLUMN W/13WC	03	2	Yes, equipment can be isolated from service	TRUE	FALSE	FALSE	40 CFR 61 Subpart V	BENZENE	31-Oct-16	29-Nov-16	ARAN PARKER
COKE	BLK243	Valve	Externally Actuated	Light Liquid	Accessible	FALSE	614	½" VALVE FROM REFLUX PUMPS @ T-702 CRUDE RES. COLUMN W/1WC &	01	0.5	Yes, equipment can be isolated from service	TRUE	FALSE	FALSE	40 CFR 61 Subpart V	BENZENE	31-Oct-16	29-Nov-16	ARAN PARKER
COKE	BLK244	Valve	Externally Actuated	Light Liquid	Accessible	FALSE	612	AUTO VALVE FROM REFLUX PUMPS @ T-702 CRUDE RES. COLUMN W/2FL	01	2	Yes, equipment can be isolated from service	TRUE	FALSE	FALSE	40 CFR 61 Subpart V	BENZENE	31-Oct-16	29-Nov-16	ARAN PARKER
COKE	BLK245	Valve	Externally Actuated	Light Liquid	Accessible	FALSE	613	½" VALVE FROM REFLUX PUMPS @ T-702 CRUDE RES. COLUMN W/1WC &	01	0.5	Yes, equipment can be isolated from service	TRUE	FALSE	FALSE	40 CFR 61 Subpart V	BENZENE	31-Oct-16	29-Nov-16	ARAN PARKER
COKE	BLK246	Valve	Externally Actuated	Light Liquid	Accessible	FALSE	609	2" VALVE FROM REFLUX PUMPS @ T-702 CRUDE RES. COLUMN W/1FL &	04	2	Yes, equipment can be isolated from service	TRUE	FALSE	FALSE	40 CFR 61 Subpart V	BENZENE	31-Oct-16	29-Nov-16	ARAN PARKER
COKE	BLK247	Valve	Externally Actuated	Light Liquid	Accessible	FALSE	611	2" VALVE FROM REFLUX PUMPS @ T-702 CRUDE RES. COLUMN W/6WC	03	2	Yes, equipment can be isolated from service	TRUE	FALSE	FALSE	40 CFR 61 Subpart V	BENZENE	31-Oct-16	29-Nov-16	ARAN PARKER
COKE	BLK248	Valve	Externally Actuated	Light Liquid	Accessible	FALSE	610	2" VALVE FROM REFLUX PUMPS TO W/1FL & 8WC	07	2	Yes, equipment can be isolated from service	TRUE	FALSE	FALSE	40 CFR 61 Subpart V	BENZENE	31-Oct-16	29-Nov-16	ARAN PARKER
COKE	BLK249	Valve	Externally Actuated	Light Liquid	Accessible	FALSE	608	2" VALVE FROM REFLUX PUMPS TO W/6WC	08	2	Yes, equipment can be isolated from service	TRUE	FALSE	FALSE	40 CFR 61 Subpart V	BENZENE	31-Oct-16	29-Nov-16	ARAN PARKER
COKE	BLK25	Pump	Standard Service	Light Liquid	Accessible	FALSE	236	LIGHT OIL LOADING PUMP	00	0	Yes, equipment can be isolated from service	TRUE	FALSE	FALSE	40 CFR 61 Subpart V	BENZENE	31-Oct-16	16-Nov-16	ARAN PARKER
COKE	BLK250	Valve	Externally Actuated	Light Liquid	Accessible	FALSE	607	2" VALVE & FLOW METER FROM REFLUX PUMPS TO W/3FL & 15WC	09	2	Yes, equipment can be isolated from service	TRUE	FALSE	FALSE	40 CFR 61 Subpart V	BENZENE	31-Oct-16	29-Nov-16	ARAN PARKER
COKE	BLK251	Flange	Standard Service	Light Liquid	Accessible	FALSE	622	MANHOLE BTX TANK BOTTOM W/1FL & 2WC	06	36	Yes, equipment can be isolated from service	TRUE	FALSE	FALSE	40 CFR 61 Subpart V	BENZENE	31-Oct-16	29-Nov-16	ARAN PARKER
COKE	BLK252	Flange	Standard Service	Light Liquid	Accessible	FALSE	578	MANHOLE BTX TANK BOTTOM W/1FL & 2WC	00	36	Yes, equipment can be isolated from service	TRUE	FALSE	FALSE	40 CFR 61 Subpart V	BENZENE	31-Oct-16	29-Nov-16	ARAN PARKER
COKE	BLK253	Valve	Externally Actuated	Light Liquid	Accessible	FALSE	623	(5) ¾" VALVES & LEVEL GAUGE BTX TANK W/2WC & 14SC	010	0.8	Yes, equipment can be isolated from service	TRUE	FALSE	FALSE	40 CFR 61 Subpart V	BENZENE	31-Oct-16	29-Nov-16	ARAN PARKER
COKE	BLK253a	Valve	Externally Actuated	Light Liquid	Accessible	FALSE	624	¾" VALVES & LEVEL GAUGE BTX TANK W/2WC & 14SC	010	0.8	Yes, equipment can be isolated from service	TRUE	FALSE	FALSE	40 CFR 61 Subpart V	BENZENE	31-Oct-16	29-Nov-16	ARAN PARKER
COKE	BLK253b	Valve	Externally Actuated	Light Liquid	Accessible	FALSE	625	¾" VALVES & LEVEL GAUGE BTX TANK W/2WC & 14SC	010	0.8	Yes, equipment can be isolated from service	TRUE	FALSE	FALSE	40 CFR 61 Subpart V	BENZENE	31-Oct-16	29-Nov-16	ARAN PARKER
COKE	BLK253c	Valve	Externally Actuated	Light Liquid	Accessible	FALSE	626	¾" VALVES & LEVEL GAUGE BTX TANK W/2WC & 14SC	010	0.8	Yes, equipment can be isolated from service	TRUE	FALSE	FALSE	40 CFR 61 Subpart V	BENZENE	31-Oct-16	29-Nov-16	ARAN PARKER
COKE	BLK253d	Valve	Externally Actuated	Light Liquid	Accessible	FALSE	627	¾" VALVES & LEVEL GAUGE BTX TANK W/2WC & 14SC	015	0.8	Yes, equipment can be isolated from service	TRUE	FALSE	FALSE	40 CFR 61 Subpart V	BENZENE	31-Oct-16	29-Nov-16	ARAN PARKER
COKE	BLK254	Valve	Externally Actuated	Light Liquid	Accessible	FALSE	579	(5) ¾" VALVES & LEVEL GAUGE BTX TANK W/2WC & 14SC	010	0.8	Yes, equipment can be isolated from service	TRUE	FALSE	FALSE	40 CFR 61 Subpart V	BENZENE	31-Oct-16	29-Nov-16	ARAN PARKER
COKE	BLK254a	Valve	Externally Actuated	Light Liquid	Accessible	FALSE	580	¾" VALVES & LEVEL GAUGE BTX TANK W/2WC & 14SC	010	0.8	Yes, equipment can be isolated from service	TRUE	FALSE	FALSE	40 CFR 61 Subpart V	BENZENE	31-Oct-16	29-Nov-16	ARAN PARKER
COKE	BLK254b	Valve	Externally Actuated	Light Liquid	Accessible	FALSE	581	¾" VALVES & LEVEL GAUGE BTX TANK W/2WC & 14SC	08	0.8	Yes, equipment can be isolated from service	TRUE	FALSE	FALSE	40 CFR 61 Subpart V	BENZENE	31-Oct-16	29-Nov-16	ARAN PARKER
COKE	BLK254c	Valve	Externally Actuated	Light Liquid	Accessible	FALSE	582	¾" VALVES & LEVEL GAUGE BTX TANK W/2WC & 14SC	012	0.8	Yes, equipment can be isolated from service	TRUE	FALSE	FALSE	40 CFR 61 Subpart V	BENZENE	31-Oct-16	29-Nov-16	ARAN PARKER
COKE	BLK254d	Valve	Externally Actuated	Light Liquid	Accessible	FALSE	583	¾" VALVES & LEVEL GAUGE BTX TANK W/2WC & 14SC	011	0.8	Yes, equipment can be isolated from service	TRUE	FALSE	FALSE	40 CFR 61 Subpart V	BENZENE	31-Oct-16	29-Nov-16	ARAN PARKER
COKE	BLK255	Valve	Externally Actuated	Light Liquid	Accessible	FALSE	584	3" VALVE BTX CONTACT WATER W/2FL & 6WC	06	3	Yes, equipment can be isolated from service	TRUE	FALSE	FALSE	40 CFR 61 Subpart V	BENZENE	31-Oct-16	29-Nov-16	ARAN PARKER
COKE	BLK256	Valve	Externally Actuated	Light Liquid	Accessible	FALSE	588	3" VALVE BTX CONTACT WATER W/2FL & 6WC	05	3	Yes, equipment can be isolated from service	TRUE	FALSE	FALSE	40 CFR 61 Subpart V	BENZENE	31-Oct-16	29-Nov-16	ARAN PARKER
COKE	BLK257	Valve	Externally Actuated	Light Liquid	Accessible	FALSE	589	3" VALVE BTX CONTACT WATER W/3FL & 10WC	03	3	Yes, equipment can be isolated from service	TRUE	FALSE	FALSE	40 CFR 61 Subpart V	BENZENE	31-Oct-16	29-Nov-16	ARAN PARKER
COKE	BLK258	Valve	Externally Actuated	Light Liquid	Accessible	FALSE	587	¾" VALVE BTX CONTACT WATER W/2FL, 12WC & 3SC	02	0.8	Yes, equipment can be isolated from service	TRUE	FALSE	FALSE	40 CFR 61 Subpart V	BENZENE	31-Oct-16	29-Nov-16	ARAN PARKER
COKE	BLK259	Flange	Standard Service	Light Liquid	Accessible	FALSE	420	MANHOLE BTX TANK TOP W/2WC	12	0	Yes, equipment can be isolated from service	TRUE	FALSE	FALSE	40 CFR 61 Subpart V	BENZENE	31-Oct-16	29-Nov-16	ARAN PARKER
COKE	BLK26	Valve	Externally Actuated	Light Liquid	Accessible	FALSE	237	½" VALVE @ LIGHT OIL LOADING PUMP W/1FL, 4WC & 4SC	01	0.5	Yes, equipment can be isolated from service	TRUE	FALSE	FALSE	40 CFR 61 Subpart V	BENZENE	31-Oct-16	16-Nov-16	ARAN PARKER
COKE	BLK260	Flange	Standard Service	Light Liquid	Accessible	FALSE	591	BTX TANK TOP W/1FL, 3WC & 7SC	11	36	Yes, equipment can be isolated from service	TRUE	FALSE	FALSE	40 CFR 61 Subpart V	BENZENE	31-Oct-16	29-Nov-16	ARAN PARKER
COKE	BLK261	Flange	Standard Service	Light Liquid	Accessible	FALSE	593	½" VALVE BTX TANK TOP W/8SC	15	8	Yes, equipment can be isolated from service	TRUE	FALSE	FALSE	40 CFR 61 Subpart V	BENZENE	31-Oct-16	29-Nov-16	ARAN PARKER
COKE	BLK262	Valve	Externally Actuated	Light Liquid	Accessible	FALSE	595	¾" VALVE BTX TANK TOP W/1WC & 5SC	13	0.8	Yes, equipment can be isolated from service	TRUE	FALSE	FALSE	40 CFR 61 Subpart V	BENZENE	31-Oct-16	29-Nov-16	ARAN PARKER
COKE	BLK263	Valve	Externally Actuated	Light Liquid	Accessible	FALSE	596	3" VALVE BTX TANK TOP W/3FL & 7WC	15	3	Yes, equipment can be isolated from service	TRUE	FALSE	FALSE	40 CFR 61 Subpart V	BENZENE	31-Oct-16	29-Nov-16	ARAN PARKER
COKE	BLK264	Flange	Standard Service	Light Liquid	Accessible	FALSE	590	BTX TANK TOP W/3FL & 6WC	11	36	Yes, equipment can be isolated from service	TRUE	FALSE	FALSE	40 CFR 61 Subpart V	BENZENE	31-Oct-16	29-Nov-16	ARAN PARKER
COKE	BLK265	Pressure Relief	Standard Service	Light Liquid	Accessible	FALSE	594	PVRV BTX TANK TOP W/2FL & 5WC	10	10	Yes, equipment can be isolated from service	TRUE	FALSE	FALSE	40 CFR 61 Subpart V	BENZENE	31-Oct-16	29-Nov-16	ARAN PARKER
COKE	BLK266	Flange	Standard Service	Light Liquid	Accessible	FALSE	592	BTX CONTACT WATER TO NAPH. SUMP W/4FL & 13WC	11	36	Yes, equipment can be isolated from service	TRUE	FALSE	FALSE	40 CFR 61 Subpart V	BENZENE	31-Oct-16	29-Nov-16	ARAN PARKER
COKE	BLK267	Valve	Externally Actuated	Light Liquid	Accessible	FALSE	0	4" VALVE GBL TO BTX TANK W/3FL & 8WC	00	0	Yes, equipment can be isolated from service	TRUE	FALSE	FALSE	40 CFR 61 Subpart V	BENZENE	31-Oct-16	29-Nov-16	ARAN PARKER
COKE	BLK268	Valve	Externally Actuated	Light Liquid	Accessible	FALSE	1253	PVRV FLUSHING LIQUOR TANK TOP W/4FL & 6WC	00	0	Yes, equipment can be isolated from service	TRUE	FALSE	FALSE	40 CFR 61 Subpart V	BENZENE	31-Oct-16	29-Nov-16	ARAN PARKER
COKE	BLK269	Valve	Externally Actuated	Light Liquid	Accessible	FALSE	1250	2" & 1" VALVES FLUSHING LIQUOR TANK TOP W/1FL, 3WC & 9SC (TO	11	0	Yes, equipment can be isolated from service	TRUE	FALSE	FALSE	40 CFR 61 Subpart V	BENZENE	31-Oct-16	29-Nov-16	ARAN PARKER

UNIT_CODE	TAG_ NUMBER	EQUITYPE _DESC	CONFIG_DESC	SERVICE_DESC	ACCESS_DESC	CLOSED_VENT _SYSTEM	ROUTE	LOCATION	LEVEL	SIZE	IFSTYPE_DESC	ATTEMPT _ALLOWED	UNDER_300_ HOURS_SERVICE	POTENTIAL _OPEN_END	GROUP_DESC	PRODUCT_DESC	DATE_ADDED	DATE_IN_SERVICE	TECH_DESC
COKE	BLK33	Valve	Externally Actuated	Light Liquid	Accessible	FALSE	244	½" VALVE @ LIGHT OIL LOADING PUMP W/2FL, 5WC & 2SC	01	0.5	Yes, equipment can be isolated from service	TRUE	FALSE	FALSE	40 CFR 61 Subpart V	BENZENE	31-Oct-16	16-Nov-16	ARAN PARKER
COKE	BLK330	Flange	Standard Service	Light Liquid	Accessible	FALSE	1369	24" MANHOLE WEST TAR TANK	10	24	Yes, equipment can be isolated from service	TRUE	FALSE	FALSE	40 CFR 61 Subpart V	BENZENE	31-Oct-16	29-Nov-16	ARAN PARKER
COKE	BLK331	Flange	Standard Service	Light Liquid	Accessible	FALSE	1375	24" MANHOLE WEST TAR TANK	10	24	Yes, equipment can be isolated from service	TRUE	FALSE	FALSE	40 CFR 61 Subpart V	BENZENE	31-Oct-16	29-Nov-16	ARAN PARKER
COKE	BLK332	Flange	Standard Service	Light Liquid	Accessible	FALSE	1377	24" MANHOLE WEST TAR TANK	10	24	Yes, equipment can be isolated from service	TRUE	FALSE	FALSE	40 CFR 61 Subpart V	BENZENE	31-Oct-16	29-Nov-16	ARAN PARKER
COKE	BLK333	Valve	Externally Actuated	Light Liquid	Accessible	FALSE	194	(2) 1" VALVES, (2) 3/4" VALVES, 3"FL, 4WC & 13SC WEST TAR TA	13	1	Yes, equipment can be isolated from service	TRUE	FALSE	FALSE	40 CFR 61 Subpart V	BENZENE	31-Oct-16	29-Nov-16	ARAN PARKER
COKE	BLK333a	Valve	Externally Actuated	Light Liquid	Accessible	FALSE	1371	1" VALVES, 3"FL, 4WC & 13SC WEST TAR TANK	13	1	Yes, equipment can be isolated from service	TRUE	FALSE	FALSE	40 CFR 61 Subpart V	BENZENE	31-Oct-16	29-Nov-16	ARAN PARKER
COKE	BLK333b	Valve	Externally Actuated	Light Liquid	Accessible	FALSE	1372	3/4" VALVES, 3"FL, 4WC & 13SC WEST TAR TANK	13	0.8	Yes, equipment can be isolated from service	TRUE	FALSE	FALSE	40 CFR 61 Subpart V	BENZENE	31-Oct-16	29-Nov-16	ARAN PARKER
COKE	BLK333c	Valve	Externally Actuated	Light Liquid	Accessible	FALSE	1373	3/4" VALVES, 3"FL, 4WC & 13SC WEST TAR TANK	13	0.8	Yes, equipment can be isolated from service	TRUE	FALSE	FALSE	40 CFR 61 Subpart V	BENZENE	31-Oct-16	29-Nov-16	ARAN PARKER
COKE	BLK334	Flange	Standard Service	Light Liquid	Accessible	FALSE	1370	2FL, 13SC & 6WC WEST TAR TANK	1-4	4	Yes, equipment can be isolated from service	TRUE	FALSE	FALSE	40 CFR 61 Subpart V	BENZENE	31-Oct-16	29-Nov-16	ARAN PARKER
COKE	BLK335	Flange	Standard Service	Light Liquid	Accessible	FALSE	1210	4" LINE TAR VAPOR RECOVERY 1FL & 6WC	1-4	4	Yes, equipment can be isolated from service	TRUE	FALSE	FALSE	40 CFR 61 Subpart V	BENZENE	31-Oct-16	29-Nov-16	ARAN PARKER
COKE	BLK336	Flange	Standard Service	Light Liquid	Accessible	FALSE	1261	4" LINE TAR VAPOR RECOVERY 4WC	010	4	Yes, equipment can be isolated from service	TRUE	FALSE	FALSE	40 CFR 61 Subpart V	BENZENE	31-Oct-16	29-Nov-16	ARAN PARKER
COKE	BLK337	Valve	Externally Actuated	Light Liquid	Accessible	FALSE	891	4" LINE TAR VAPOR RECOVERY 4" VALVE, 5FL & 7WC	14	0	Yes, equipment can be isolated from service	TRUE	FALSE	FALSE	40 CFR 61 Subpart V	BENZENE	31-Oct-16	29-Nov-16	ARAN PARKER
COKE	BLK338	Flange	Standard Service	Light Liquid	Accessible	FALSE	1263	4" LINE TAR VAPOR RECOVERY 1FL & 7WC	15	4	Yes, equipment can be isolated from service	TRUE	FALSE	FALSE	40 CFR 61 Subpart V	BENZENE	31-Oct-16	29-Nov-16	ARAN PARKER
COKE	BLK339	Flange	Standard Service	Light Liquid	Accessible	FALSE	1402	MANHOLE TOP OF DIRTY LIQUOR TANK W/2WC	11	36	Yes, equipment can be isolated from service	TRUE	FALSE	FALSE	40 CFR 61 Subpart V	BENZENE	31-Oct-16	29-Nov-16	ARAN PARKER
COKE	BLK34	Valve	Externally Actuated	Light Liquid	Accessible	FALSE	220	2" VALVE @ LIGHT OIL STORAGE TOP W/2FL & 6WC	10	2	Yes, equipment can be isolated from service	TRUE	FALSE	FALSE	40 CFR 61 Subpart V	BENZENE	31-Oct-16	16-Nov-16	ARAN PARKER
COKE	BLK340	Valve	Externally Actuated	Light Liquid	Accessible	FALSE	701	1"VALVE CRUDE RESIDUE LIGHT OIL STILL TOP W/1FL, 10 WC & 4SC	25	1	Yes, equipment can be isolated from service	TRUE	FALSE	FALSE	40 CFR 61 Subpart V	BENZENE	31-Oct-16	29-Nov-16	ARAN PARKER
COKE	BLK341	Valve	Externally Actuated	Light Liquid	Accessible	FALSE	702	1/2 VALVE CRUDE RESIDUE LIGHT OIL STILL TOP W/1FL, 9 WC & 8S	35	0.5	Yes, equipment can be isolated from service	TRUE	FALSE	FALSE	40 CFR 61 Subpart V	BENZENE	31-Oct-16	29-Nov-16	ARAN PARKER
COKE	BLK342	Pressure Relief	Standard Service	Light Liquid	Accessible	FALSE	1076	PVRV PRIMARY COOLER SUMP	04	3	Yes, equipment can be isolated from service	TRUE	FALSE	FALSE	40 CFR 61 Subpart V	BENZENE	16-Mar-18	16-Mar-18	Matt Case
COKE	BLK343	Valve	Externally Actuated	Light Liquid	Accessible	FALSE	708	BY RAIL AT CRUDE RESIDUE COLUMN	13	1	Yes, equipment can be isolated from service	FALSE	FALSE	FALSE	40 CFR 61 Subpart V	BENZENE	20-Nov-16	20-Nov-16	Brent Birdwell
COKE	BLK344	Valve	Externally Actuated	Light Liquid	Accessible	FALSE	707	BY RAIL AT CRUDE RESIDUE COLUMN	13	1	Yes, equipment can be isolated from service	FALSE	FALSE	FALSE	40 CFR 61 Subpart V	BENZENE	20-Nov-16	20-Nov-16	Brent Birdwell
COKE	BLK345	Valve	Externally Actuated	Light Liquid	Accessible	FALSE	706	BY RAIL AT CRUDE RESIDUE COLUMN	13	1	Yes, equipment can be isolated from service	FALSE	FALSE	FALSE	40 CFR 61 Subpart V	BENZENE	20-Nov-16	20-Nov-16	Brent Birdwell
COKE	BLK346	Valve	Externally Actuated	Light Liquid	Accessible	FALSE	716	BY RAIL AT CRUDE RESIDUE COLUMN	13	3	Yes, equipment can be isolated from service	FALSE	FALSE	FALSE	40 CFR 61 Subpart V	BENZENE	20-Nov-16	20-Nov-16	Brent Birdwell
COKE	BLK347	Valve	Externally Actuated	Light Liquid	Accessible	FALSE	712	BY RAIL AT CRUDE RESIDUE COLUMN	16	3	Yes, equipment can be isolated from service	FALSE	FALSE	FALSE	40 CFR 61 Subpart V	BENZENE	20-Nov-16	20-Nov-16	Brent Birdwell
COKE	BLK348	Valve	Externally Actuated	Light Liquid	Accessible	FALSE	705	BY RAIL AT CRUDE RESIDUE COLUMN	14	2	Yes, equipment can be isolated from service	FALSE	FALSE	FALSE	40 CFR 61 Subpart V	BENZENE	20-Nov-16	20-Nov-16	Brent Birdwell
COKE	BLK349	Valve	Externally Actuated	Light Liquid	Accessible	FALSE	717	BY RAIL AT CRUDE RESIDUE COLUMN	16	1	Yes, equipment can be isolated from service	FALSE	FALSE	FALSE	40 CFR 61 Subpart V	BENZENE	20-Nov-16	20-Nov-16	Brent Birdwell
COKE	BLK35	Valve	Externally Actuated	Light Liquid	Accessible	FALSE	223	2" VALVE WEST LIGHT OIL STORAGE TANK TOP W/4FL & 9WC	10	2	Yes, equipment can be isolated from service	TRUE	FALSE	FALSE	40 CFR 61 Subpart V	BENZENE	31-Oct-16	16-Nov-16	ARAN PARKER
COKE	BLK350	Valve	Externally Actuated	Light Liquid	Accessible	FALSE	718	BY RAIL AT CRUDE RESIDUE COLUMN BEHIND BOX	13	0.5	Yes, equipment can be isolated from service	FALSE	FALSE	FALSE	40 CFR 61 Subpart V	BENZENE	20-Nov-16	20-Nov-16	Brent Birdwell
COKE	BLK351	Valve	Externally Actuated	Light Liquid	Accessible	FALSE	251	LIGHT OIL LOADING LINE FROM PUMPS	04	0.5	Yes, equipment can be isolated from service	FALSE	FALSE	FALSE	40 CFR 61 Subpart V	BENZENE	16-Nov-16	16-Nov-16	Matt Case
COKE	BLK352	Valve	Externally Actuated	Light Liquid	Accessible	FALSE	252	LIGHT OIL LOADING FROM PUMPS	04	0.3	Yes, equipment can be isolated from service	FALSE	FALSE	FALSE	40 CFR 61 Subpart V	BENZENE	16-Nov-16	16-Nov-16	Matt Case
COKE	BLK353	Valve	Externally Actuated	Light Liquid	Accessible	FALSE	586	UNDER BTX TANK	14	1	Yes, equipment can be isolated from service	TRUE	FALSE	TRUE	40 CFR 61 Subpart V	BENZENE	11-Nov-16	11-Nov-16	Matt Case
COKE	BLK354	Valve	Externally Actuated	Light Liquid	Accessible	FALSE	308	(2) 2" VALVES @ NAPHTHALENE SUMP W/3WC & 5SC	05	2	Yes, equipment can be isolated from service	TRUE	FALSE	FALSE	40 CFR 61 Subpart V	BENZENE	01-Dec-16	01-Dec-16	Matt Case
COKE	BLK355	Valve	Externally Actuated	Light Liquid	Accessible	FALSE	309	(2) 2" VALVES @ NAPHTHALENE SUMP W/3WC & 5SC	05	2	Yes, equipment can be isolated from service	TRUE	FALSE	FALSE	40 CFR 61 Subpart V	BENZENE	01-Dec-16	01-Dec-16	Matt Case
COKE	BLK356	Valve	Externally Actuated	Light Liquid	Accessible	FALSE	311	(2) 1" VALVES @ NAPHTHALENE SUMP W/13SC	04	0.5	Yes, equipment can be isolated from service	TRUE	FALSE	FALSE	40 CFR 61 Subpart V	BENZENE	01-Dec-16	01-Dec-16	Matt Case
COKE	BLK357	Valve	Externally Actuated	Light Liquid	Accessible	FALSE	456	AT FINAL COOLER PUMP	04	0.5	Unclassified	FALSE	FALSE	FALSE	40 CFR 61 Subpart V	BENZENE	16-Nov-16	16-Nov-16	Matt Case
COKE	BLK358	Valve	Externally Actuated	Light Liquid	Accessible	FALSE	457	AT FINAL COOLER PUMP	04	0.5	Unclassified	FALSE	FALSE	FALSE	40 CFR 61 Subpart V	BENZENE	16-Nov-16	16-Nov-16	Matt Case
COKE	BLK359	Pressure Relief	Standard Service	Light Liquid	Accessible	FALSE	453	BY FINAL COOLER PUMP	06	2	Yes, equipment can be isolated from service	FALSE	FALSE	FALSE	40 CFR 61 Subpart V	BENZENE	16-Nov-16	16-Nov-16	Matt Case
COKE	BLK36	Blower	Standard Service	Vapor	Accessible	FALSE	83	2" VALVE EAST LIGHT OIL STORAGE TANK TOP W/3FL & 7WC	10	0	Yes, equipment can be isolated from service	TRUE	FALSE	FALSE	40 CFR 61 Subpart V	BENZENE	31-Oct-16	16-Nov-16	ARAN PARKER
COKE	BLK360	Valve	Externally Actuated	Light Liquid	Accessible	FALSE	218	EAST LIGHT OIL STORAGE TANK 2 INCH CV	12	2	Yes, equipment can be isolated from service	FALSE	FALSE	FALSE	40 CFR 61 Subpart V	BENZENE	16-Nov-16	16-Nov-16	Matt Case
COKE	BLK361	Valve	Externally Actuated	Light Liquid	Accessible	FALSE	719	BY RAIL AT CRUDE RESIDUE COLUMN BEHIND BOX	13	0.5	Yes, equipment can be isolated from service	FALSE	FALSE	FALSE	40 CFR 61 Subpart V	BENZENE	20-Nov-16	20-Nov-16	Brent Birdwell
COKE	BLK362	Valve	Externally Actuated	Light Liquid	Accessible	FALSE	724.001	12-12" MH COVERS ON LIGHT OIL STILL WEST SIDE	14	1	Yes, equipment can be isolated from service	TRUE	FALSE	FALSE	40 CFR 61 Subpart V	BENZENE	22-Mar-18	22-Mar-18	Brent Birdwell
COKE	BLK363	Valve	Externally Actuated	Light Liquid	Accessible	FALSE	724.002	12-12" MH COVERS ON LIGHT OIL STILL WEST SIDE	14	1	Yes, equipment can be isolated from service	TRUE	FALSE	FALSE	40 CFR 61 Subpart V	BENZENE	22-Mar-18	22-Mar-18	Brent Birdwell
COKE	BLK364	Valve	Externally Actuated	Light Liquid	Accessible	FALSE	724.003	12-12" MH COVERS ON LIGHT OIL STILL WEST SIDE	17	1	Yes, equipment can be isolated from service	TRUE	FALSE	FALSE	40 CFR 61 Subpart V	BENZENE	22-Mar-18	22-Mar-18	Brent Birdwell
COKE	BLK365	Valve	Externally Actuated	Light Liquid	Accessible	FALSE	692	VALVE LIGHT OIL VAPOR COOLER AT HANDRAIL	14	2	Yes, equipment can be isolated from service	FALSE	FALSE	FALSE	40 CFR 61 Subpart V	BENZENE	20-Nov-16	13-Jan-17	Brent Birdwell
COKE	BLK366	Valve	Externally Actuated	Light Liquid	Accessible	FALSE	695	VALVE LIGHT OIL VAPOR COOLER AT HANDRAIL	11	0.8	Yes, equipment can be isolated from service	FALSE	FALSE	FALSE	40 CFR 61 Subpart V	BENZENE	20-Nov-16	20-Nov-16	Brent Birdwell
COKE	BLK367	Valve	Externally Actuated	Light Liquid	Accessible	FALSE	694	VALVE LIGHT OIL VAPOR COOLER AT HANDRAIL	13	1	Yes, equipment can be isolated from service	FALSE	FALSE	FALSE	40 CFR 61 Subpart V	BENZENE	20-Nov-16	20-Nov-16	Matt Case
COKE	BLK368	Valve	Externally Actuated	Light Liquid	Accessible	FALSE	696	VALVE LIGHT OIL VAPOR COOLER AT HANDRAIL	113	1	Yes, equipment can be isolated from service	FALSE	FALSE	FALSE	40 CFR 61 Subpart V	BENZENE	20-Nov-16	20-Nov-16	Matt Case
COKE	BLK369	Valve	Externally Actuated	Light Liquid	Difficult to Monitor	FALSE	697	VALVE LIGHT OIL VAPOR COOLER AT HANDRAIL	113	0.5	Yes, equipment can be isolated from service	FALSE	FALSE	FALSE	40 CFR 61 Subpart V	BENZENE	20-Nov-16	20-Nov-16	Matt Case
COKE	BLK37	Flange	Standard Service	Light Liquid	Accessible	FALSE	216	EXPLOSION VENT WEST LIGHT OIL STORAGE TANK TOP W/3FL & 6WC	10	36	Yes, equipment can be isolated from service	TRUE	FALSE	FALSE	40 CFR 61 Subpart V	BENZENE	31-Oct-16	16-Nov-16	ARAN PARKER
COKE	BLK370	Valve	Externally Actuated	Light Liquid	Accessible	FALSE	688	VALVE LIGHT OIL VAPOR COOLER AT HANDRAIL	16	3	Yes, equipment can be isolated from service	FALSE	FALSE	FALSE	40 CFR 61 Subpart V	BENZENE	20-Nov-16	20-Nov-16	Matt Case
COKE	BLK371	Valve	Externally Actuated	Light Liquid	Accessible	FALSE	690	VALVE LIGHT OIL VAPOR COOLER AT HANDRAIL	12	1	Yes, equipment can be isolated from service	FALSE	FALSE	FALSE	40 CFR 61 Subpart V	BENZENE	20-Nov-16	20-Nov-16	Matt Case
COKE	BLK372	Valve	Externally Actuated	Light Liquid	Accessible	FALSE	689	VALVE LIGHT OIL VAPOR COOLER AT HANDRAIL BEHIND BOX	13	2	Yes, equipment can be isolated from service	FALSE	FALSE	FALSE	40 CFR 61 Subpart V	BENZENE	20-Nov-16	20-Nov-16	Matt Case
COKE	BLK373	Valve	Externally Actuated	Light Liquid	Accessible	FALSE	693	VALVE LIGHT OIL VAPOR COOLER AT HANDRAIL	13	1	Yes, equipment can be isolated from service	FALSE	FALSE	FALSE	40 CFR 61 Subpart V	BENZENE	20-Nov-16	20-Nov-16	Matt Case
COKE	BLK374	Valve	Externally Actuated	Light Liquid	Accessible	FALSE	684	VALVE LIGHT OIL VAPOR COOLER AT HANDRAIL	16	3	Yes, equipment can be isolated from service	FALSE	FALSE	FALSE	40 CFR 61 Subpart V	BENZENE	20-Nov-16	20-Nov-16	Matt Case
COKE	BLK375	Valve	Externally Actuated	Light Liquid	Accessible	FALSE	686	VALVE LIGHT OIL VAPOR COOLER AT HANDRAIL	13	0.8	Yes, equipment can be isolated from service	FALSE	FALSE	FALSE	40 CFR 61 Subpart V	BENZENE	20-Nov-16	20-Nov-16	Matt Case
COKE	BLK376	Flange	Standard Service	Light Liquid	Accessible	FALSE	246.001	LIGHT OIL LOADING LINE FROM PUMPS	05	2	Yes, equipment can be isolated from service	TRUE	FALSE	FALSE	40 CFR 61 Subpart V	BENZENE	22-Mar-18	22-Mar-18	Brent Birdwell
COKE	BLK377	Flange	Standard Service	Light Liquid	Accessible	FALSE	221.001	FLAME ARRESTOR @ WEST LIGHT OIL STORAGE TANK	12	2	Yes, equipment can be isolated from service	TRUE	FALSE	FALSE	40 CFR 61 Subpart V	BENZENE	22-Mar-18	22-Mar-18	Matt Case
COKE	BLK378	Flange	Standard Service	Light Liquid	Accessible	FALSE	226.001	FLAME ARRESTOR @ EAST LIGHT OIL STORAGE TANK TOP	12	2	Yes, equipment can be isolated from service	TRUE	FALSE	FALSE	40 CFR 61 Subpart V	BENZENE	22-Mar-18	22-Mar-18	Matt Case
COKE	BLK379	Flange	Standard Service	Light Liquid	Accessible	FALSE	263.001	SPARK ARRESTOR VRL @ LIGHT OIL LOADING STATION	2P2	10	Yes, equipment can be isolated from service	TRUE	FALSE	FALSE	40 CFR 61 Subpart V	BENZENE	22-Mar-18	22-Mar-18	Matt Case
COKE	BLK38	Flange	Standard Service	Light Liquid	Accessible	FALSE	219	MANHOLE WEST LIGHT OIL STORAGE TANK TOP W/1FL & 2WC	10	36	Yes, equipment can be isolated from service	TRUE	FALSE	FALSE	40 CFR 61 Subpart V	BENZENE	31-Oct-16	16-Nov-16	ARAN PARKER
COKE	BLK380	Valve	Externally Actuated	Light Liquid	Accessible	FALSE	261	VALVE VRL @ LIGHT OIL LOADING STATION	2P3	2	Yes, equipment can be isolated from service	FALSE	FALSE	FALSE	40 CFR 61 Subpart V	BENZENE	16-Nov-16	16-Nov-16	Matt Case
COKE	BLK381	Valve	Externally Actuated	Light Liquid	Accessible	FALSE	259	VALVE VRL @LIGHT OIL LOADING STATION	2P3	2	Yes, equipment can be isolated from service	FALSE	FALSE	FALSE	40 CFR 61 Subpart V	BENZENE	16-Nov-16	16-Nov-16	Matt Case
COKE	BLK382	Valve	Externally Actuated	Light Liquid	Accessible	FALSE	691	VALVE LIGHT OIL VAPOR COOLER AT HANDRAIL	10	2	Yes, equipment can be isolated from service	FALSE	FALSE	FALSE	40 CFR 61 Subpart V	BENZENE	20-Nov-16	20-Nov-16	Matt Case
COKE	BLK383	Valve	Externally Actuated	Light Liquid	Accessible	FALSE	709	BY RAIL AT MANWAY VALVE CRUDE RESIDUE COLUMN	18	1	Yes, equipment can be isolated from service	FALSE	FALSE	FALSE	40 CFR 61 Subpart V	BENZENE	20-Nov-16	20-Nov-16	Matt Case
COKE	BLK384	Valve	Externally Actuated	Light Liquid	Accessible	FALSE	710	BY RAIL AT MANWAY VALVE CRUDE RESIDUE COLUMN	110	1	Yes, equipment can be isolated from service	FALSE	FALSE	FALSE	40 CFR 61 Subpart V	BENZENE	20-Nov-16	20-Nov-16	Matt Case
COKE	BLK385	Valve	Externally Actuated	Light Liquid	Accessible	FALSE	711	BY RAIL AT MANWAY VALVE CRUDE RESIDUE COLUMN	113	1	Yes, equipment can be isolated from service	FALSE	FALSE	FALSE	40 CFR 61 Subpart V	BENZENE	20-Nov-16	20-Nov-16	Matt Case
COKE	BLK386	Valve	Externally Actuated	Light Liquid	Accessible	FALSE	714	BY RAIL AT CRUDE RESIDUE COLUMN	18	0.5	Yes, equipment can be isolated from service	FALSE	FALSE	FALSE	40 CFR 61 Subpart V	BENZENE	20-Nov-16	20-Nov-16	Matt Case
COKE	BLK387	Valve	Externally Actuated	Light Liquid	Accessible	FALSE	713	BY RAIL AT CRUDE RESIDUE COLUMN	16	0.3	Yes, equipment can be isolated from service	FALSE	FALSE	FALSE	40 CFR 61 Subpart V	BENZENE	20-Nov-16	20-Nov-16	Matt Case
COKE	BLK388	Valve	Externally Actuated	Light Liquid	Accessible	FALSE	414	PROCESS WATER DECANTER	11	2	Unclassified	FALSE	FALSE	FALSE	40 CFR 61 Subpart V	BENZENE	11-Nov-16	12-Dec-16	Matt Case
COKE	BLK389	Valve	Externally Actuated	Light Liquid	Accessible	FALSE	416	ABOVE 213A PROCESS WATER DECANTER	13	0.5	Unclassified	FALSE	FALSE	FALSE	40 CFR 61 Subpart V	BENZENE	11-Nov-16	01-Dec-16	Matt Case
COKE	BLK39	Flange	Standard Service	Light Liquid	Accessible	FALSE	228	MANHOLE EAST LIGHT OIL STORAGE TANK TOP W/1FL & 2WC	10	36	Yes, equipment can be isolated from service	TRUE	FALSE	FALSE	40 CFR 61 Subpart V	BENZENE	31-Oct-16	16-Nov-16	ARAN PARKER
COKE	BLK390	Valve	Externally Actuated	Light Liquid	Accessible	FALSE	476	1" TAR LEVEL VALVES FINAL COOLER	07	1	Yes, equipment can be isolated from service	TRUE	FALSE	FALSE	40 CFR 61 Subpart V	BENZENE	01-Dec-16	01-Dec-16	Matt Case
COKE	BLK391	Valve	Externally Actuated	Light Liquid	Accessible	FALSE	233	VALVE AT LIGHT OIL LOADING PUMP STATION	05	0.8	Yes, equipment can be isolated from service	FALSE	FALSE	FALSE	40 CFR 61 Subpart V	BENZENE	16-Nov-16	16-Nov-16	Matt Case
COKE	BLK392	Pressure Relief	Standard Service	Light Liquid	Accessible	FALSE	1213	PVRV EAST TAR DECANTER W/3FL & 6WC	13	8	Yes, equipment can be isolated from service	TRUE	FALSE	FALSE	40 CFR 61 Subpart V	BENZENE	31-Oct-16	29-Nov-16	Matt Case
COKE	BLK393	Valve	Externally Actuated	Light Liquid	Accessible	FALSE	1214	TOP EAST DECANTER	14	0.8	Yes, equipment can be isolated from service	FALSE	FALSE	FALSE	40 CFR 61 Subpart V	BENZENE	11-Nov-16	16-Nov-16	Matt Case
COKE	BLK394	Valve	Externally Actuated	Light Liquid	Accessible	FALSE	1207	TOP EAST TAR DECANTER	14	2	Yes, equipment can be isolated from service	FALSE	FALSE	FALSE	40 CFR 61 Subpart V	BENZENE	16-Nov-16	16-Nov-16	Matt Case
COKE	BLK395	Valve	Externally Actuated	Light Liquid	Accessible	FALSE	1208	TOP EAST TAR DECANTER	13	1	Yes, equipment can be isolated from service	FALSE	FALSE	FALSE	40 CFR 61 Subpart V	BENZENE	16-Nov-16	16-Nov-16	Matt Case
COKE	BLK396	Valve	Externally Actuated	Light Liquid	Accessible	FALSE	1209	TOP EAST DECANTER	11	0.8	Yes, equipment can be isolated from service	FALSE	FALSE	FALSE	40 CFR 61 Subpart V	BENZENE	11-Nov-16	11-Nov-16	Matt Case
COKE	BLK397	Valve	Externally Actuated	Light Liquid	Accessible	FALSE	1238	TOP WEST TAR DECANTER	14	0.8	Yes, equipment can be isolated from service	FALSE	FALSE	FALSE	40 CFR 61 Subpart V	BENZENE	11-Nov-16	11-Nov-16	Matt Case
COKE	BLK398	Valve	Externally Actuated	Light Liquid	Accessible	FALSE	1239	TOP WEST DECANTER	14	0.5	Yes, equipment can be isolated from service	TRUE	FALSE	TRUE	40 CFR 61 Subpart V	BENZENE	11-Nov-16	11-Nov-16	Matt Case
COKE	BLK399	Valve	Externally Actuated	Light Liquid	Accessible	FALSE	1240	VENT CAPTURE WEST TAR DECANTER	14	2	Yes, equipment can be isolated from service	FALSE	FALSE	FALSE	40 CFR 61 Subpart V	BENZENE	16-Nov-16	16-Nov-16	Matt Case

UNIT_CODE	TAG_ NUMBER	EQUITYPE _DESC	CONFIG_DESC	SERVICE_DESC	ACCESS_DESC	CLOSED_VENT _SYSTEM	ROUTE	LOCATION	LEVEL	SIZE	IFSTYPE_DESC	ATTEMPT _ALLOWED	UNDER_300_ HOURS_SERVICE	POTENTIAL _OPEN_END	GROUP_DESC	PRODUCT_DESC	DATE_ADDED	DATE_IN_SERVICE	TECH_DESC
COKE	BLK98b	Valve	Externally Actuated	Light Liquid	Accessible	FALSE	495	1" TAR LEVEL VALVES FINAL COOLER	060	1	Yes, equipment can be isolated from service	TRUE	FALSE	FALSE	40 CFR 61 Subpart V	BENZENE	31-Oct-16	12-Nov-16	ARAN PARKER
COKE	BLK99	Valve	Externally Actuated	Light Liquid	Accessible	FALSE	496	(3) 1" TAR LEVEL VALVES FINAL COOLER W/1FL & 3WC	065	1	Yes, equipment can be isolated from service	TRUE	FALSE	FALSE	40 CFR 61 Subpart V	BENZENE	31-Oct-16	12-Nov-16	ARAN PARKER
COKE	BLK99a	Valve	Externally Actuated	Light Liquid	Accessible	FALSE	497	1" TAR LEVEL VALVES FINAL COOLER W/1FL & 3WC	065	1	Yes, equipment can be isolated from service	TRUE	FALSE	FALSE	40 CFR 61 Subpart V	BENZENE	31-Oct-16	12-Nov-16	ARAN PARKER
COKE	BLK99b	Valve	Externally Actuated	Light Liquid	Accessible	FALSE	498	1" TAR LEVEL VALVES FINAL COOLER W/1FL & 3WC	065	1	Yes, equipment can be isolated from service	TRUE	FALSE	FALSE	40 CFR 61 Subpart V	BENZENE	31-Oct-16	12-Nov-16	ARAN PARKER

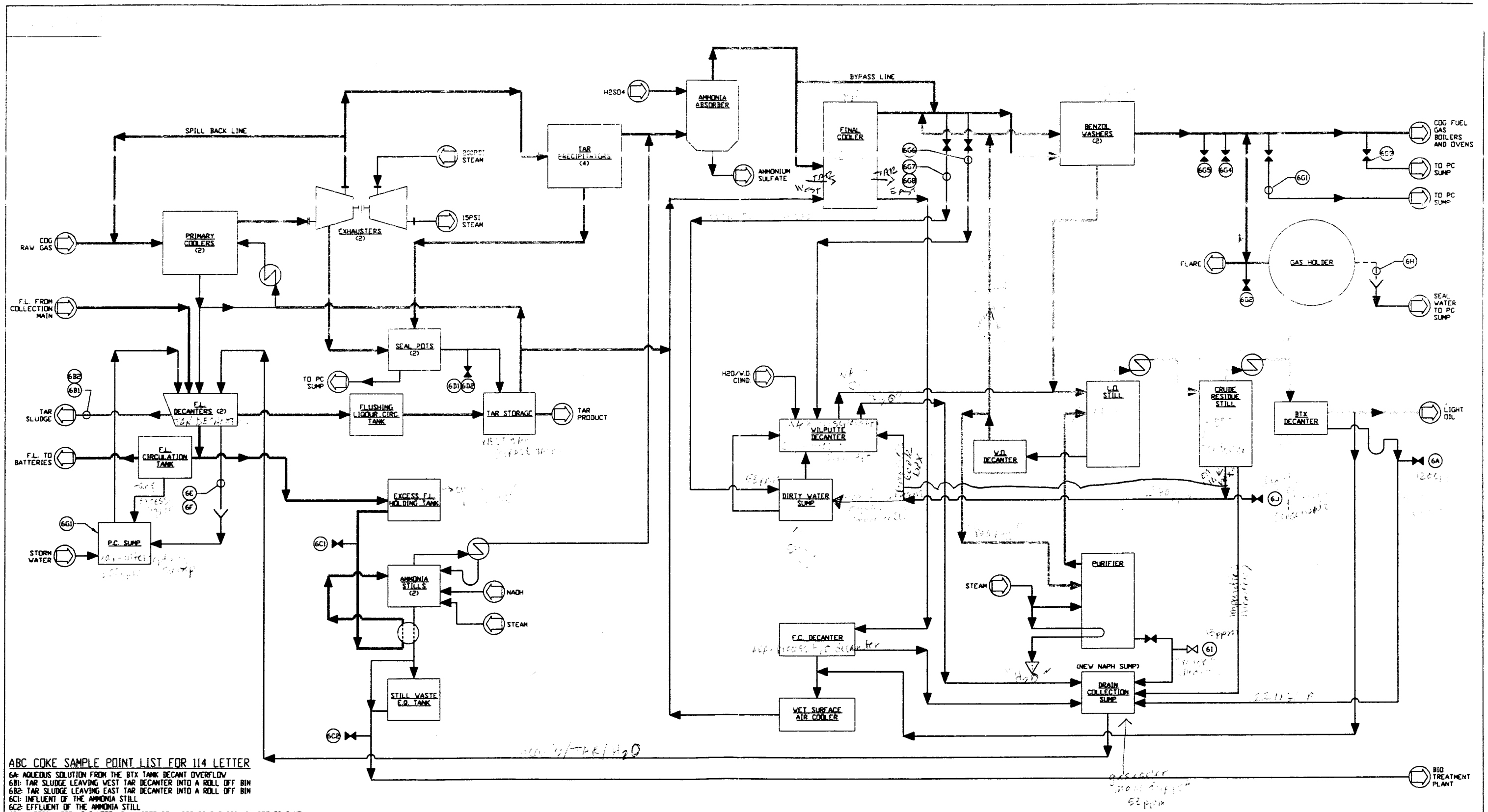

ABC COKE SAMPLE POINT LIST FOR 114 LETTER

6A: AQUEOUS SOLUTION FROM THE BTX TANK DECANT OVERFLOW
6B1: TAR SLUDGE LEAVING WEST TAR DECANTER INTO A ROLL OFF BIN
6B2: TAR SLUDGE LEAVING EAST TAR DECANTER INTO A ROLL OFF BIN
6C1: INFLUENT OF THE AMMONIA STILL
6C2: EFFLUENT OF THE AMMONIA STILL
6D1: MATERIAL FROM THE NORTH EXHAUSTER SEAL POT TO THE PRIMARY COOLER SUMP
6D2: MATERIAL FROM THE SOUTH EXHAUSTER SEAL POT TO THE PRIMARY COOLER SUMP
6E: LIQUID LEAVING THE EAST TAR DECANTER (LIQUID LEVEL CHECKPOINT) INTO AN OPEN FUNNEL
6F: LIQUID LEAVING THE WEST TAR DECANTER (LIQUID LEVEL CHECKPOINT) INTO AN OPEN FUNNEL
6G1: SOUTH SECTION WILLPUTTE GAS MAIN
6G2: LITTLE HOLDER POT
6G3: NORTH SECTION WILPUTTE GAS MAIN
6G4: BECKERS MAIN AT MIXING STATION
6G5: GAS MAIN AT SATURATOR DRIVEWAY
6G6: GAS MAIN NEAR FINAL GAS COOLER BY-PASS
6G7: EAST DOWNCOMER
6G8: WEST DOWNCOMER
6H: WATER FROM WATER SEAL ON THE GAS HOLDER
6I: DRAINED MATERIAL FROM THE PURIFIER INTO THE NAPHTHALENE SUMP
6J: LIGHT OIL PLATFORM CONDENSATE

FOR REVIEW

LEGEND

- COG COKE OVEN GAS
- F.L. FLUSHING LIQUOR
- L.O. LIGHT OIL
- W.O. WASH OIL
- TAR
- VALVE, NORMALLY OPEN
- VALVE, NORMALLY CLOSED
- SAMPLE POINT DESIGNATION
- HEAT EXCHANGER

TETRA TECH
ENGINEERING SERVICES GROUP
Pittsburgh, Pennsylvania 15220-2745
(412) 921-7090

DRAWN BY HORTON	DATE 2-14-12	PLOT DATE	CHECKED BY / DATE
DRAWING NO 4056-D001C		PLOT TIME	APPROVED BY / DATE

ALABAMA BY-PRODUCTS CORPORATION

BYPRODUCT PLANT SHT 3 OF 3
PROCESS FLOW DIAGRAM

4056-D001C

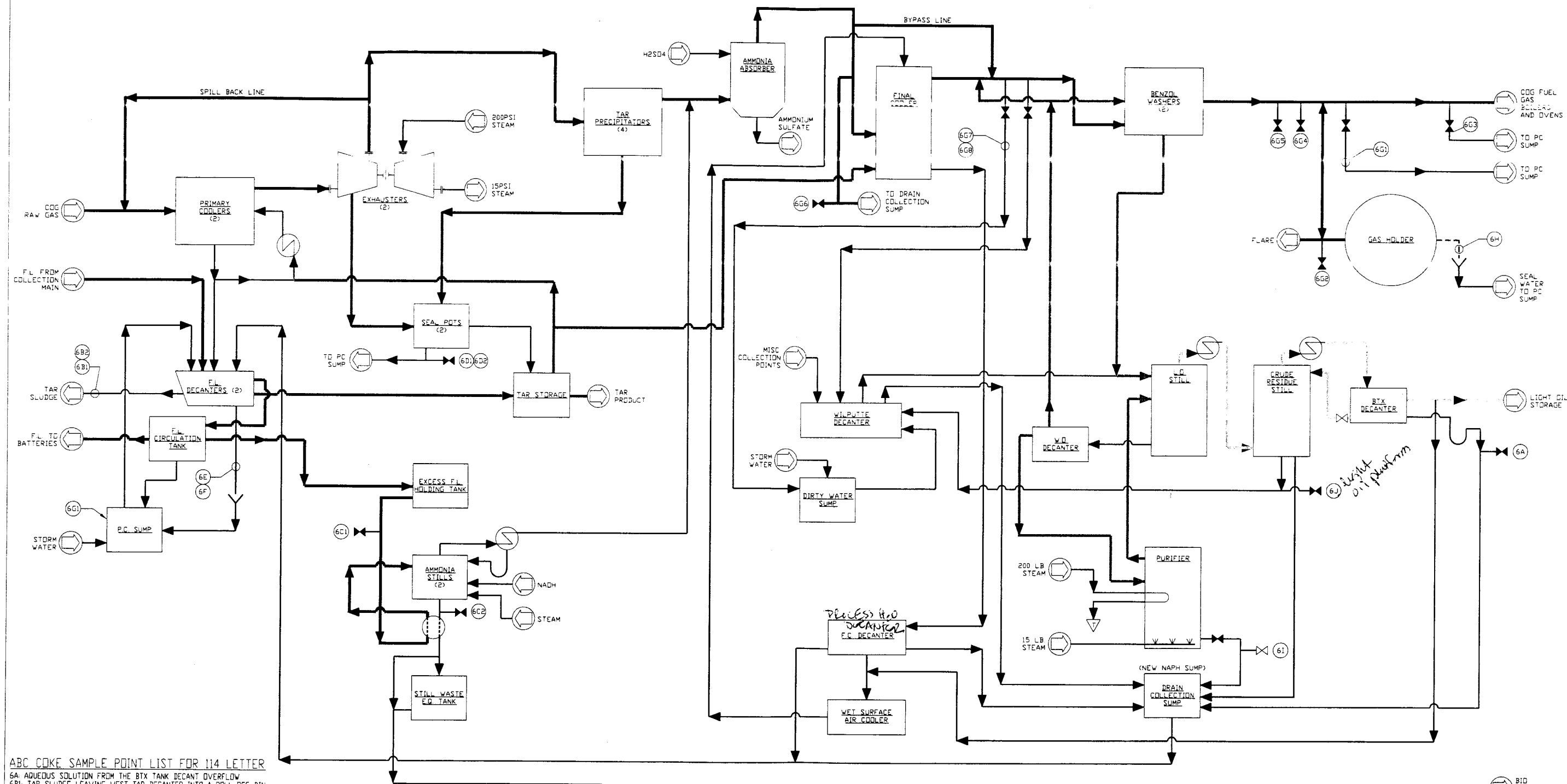

ABC COKE SAMPLE POINT LIST FOR 114 LETTER

6A: AQUEOUS SOLUTION FROM THE BTX TANK DECANT OVERFLOW
6B1: TAR SLUDGE LEAVING WEST TAR DECANTER INTO A ROLL OFF BIN
6B2: TAR SLUDGE LEAVING EAST TAR DECANTER INTO A ROLL OFF BIN
6C1: INFLUENT OF THE AMMONIA STILL
6C2: EFFLUENT OF THE AMMONIA STILL
6D1: MATERIAL FROM THE NORTH EXHAUSTER SEAL POT TO THE PRIMARY COOLER SUMP
6D2: MATERIAL FROM THE SOUTH EXHAUSTER SEAL POT TO THE PRIMARY COOLER SUMP
6E: LIQUID LEAVING THE EAST TAR DECANTER (LIQUID LEVEL CHECKPOINT) INTO AN OPEN FUNNEL
6F: LIQUID LEAVING THE WEST TAR DECANTER (LIQUID LEVEL CHECKPOINT) INTO AN OPEN FUNNEL
6G1: SOUTH SECTION WILLPUTTE GAS MAIN
6G2: LITTLE HOLDER POT
6G3: NORTH SECTION WILPUTTE GAS MAIN
6G4: BECKERS MAIN AT MIXING STATION
6G5: GAS MAIN AT SATURATOR DRIVEWAY
6G6: GAS MAIN NEAR FINAL GAS COOLER BY-PASS
6G7: EAST DOWNCOMER
6G8: WEST DOWNCOMER
6H: WATER FROM WATER SEAL ON THE GAS HOLDER
6I: DRAINED MATERIAL FROM THE PURIFIER INTO THE NAPHTHALENE SUMP
6J: LIGHT OIL PLATFORM CONDENSATE

LEGEND

- COG COKE OVEN GAS
- F.L. FLUSHING LIQOUR
- L.O. LIGHT OIL
- W.O. WASH OIL
- TAR
- VALVE, NORMALLY OPEN
- VALVE, NORMALLY CLOSED
- 6C2 SAMPLE POINT DESIGNATION
- HEAT EXCHANGER

TETRA TECH
ENGINEERING SERVICES GROUP
Pittsburgh, Pennsylvania 15220-2745
(412) 921-7090

DRAWN BY	DATE	PLOT DATE	CHECKED BY	DATE
HORTON	2-14-12			
DRAWING NO 4056-D001C		PLOT TIME	APPROVED BY	DATE

DRAWING NO	DESCRIPTION	NO	REVISIONS	MADE BY	CHECK BY	DATE	NO	REVISIONS	MADE BY	CHECK BY	DATE
	REFERENCES						0	ISSUED FOR SUBMITTAL	KMH	MS	4/25/12

THIS PRINT AND ALL INFORMATION THEREON IS THE PROPERTY OF ALABAMA BY-PRODUCTS CORPORATION and is confidential and must not be made public or copied unless so authorized by their and is subject to return upon demand

	BY	DATE
DRAWN	RPS	06/01/11
CHECKED	-	-
APPROVED	-	-
APPROVED	-	-
ISSUED	-	-

ALABAMA BY-PRODUCTS CORPORATION
FOUNDRY COKE • COAL • COAL CHEMICALS
COKE OVEN AND BY-PRODUCTS DIVISION
P.O. BOX 6507 - TARRANT BRANCH
BIRMINGHAM ALABAMA 35217

BYPRODUCT PLANT SHT 3 OF 3
PROCESS FLOW DIAGRAM

DATE
SCALE AS NOTED

4056-D001C

4056-D001B

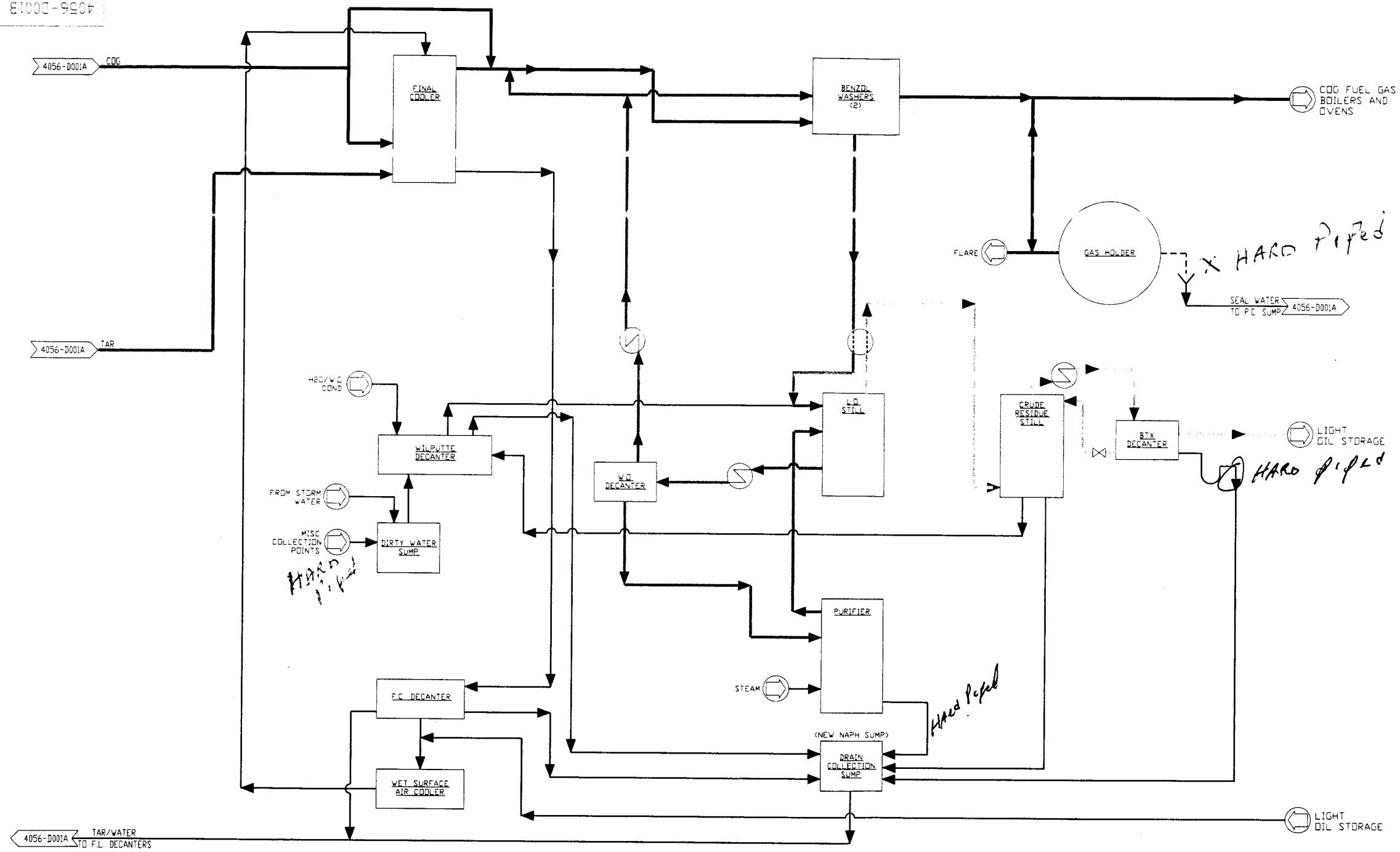

NOTE:
1. INT = INTERMITTANT

LEGEND

- COG COKE OVEN GAS
- F.L. FLUSHING LIQOUR
- L.O. LIGHT OIL
- W.O. WASH OIL
- TAR
- NORMALLY CLOSED VALVE

RESPONSE TO EPA 114(a) LETTER RECEIVED BY ABC COKE ON 1-19-12 ITEM 23(a)

TETRA TECH
ENGINEERING SERVICES GROUP
Pittsburgh, Pennsylvania 15220-2745
(412) 921-7090

DRAWN BY	DATE	PLOT DATE	CHECKED BY	DATE
HORTON	2-14-12			
DRAWING NO 4056-D001B		PLOT TIME	APPROVED BY	DATE

DRAWING NO	DESCRIPTION	REFERENCES	NO	REVISIONS	MADE BY	CHECK BY	DATE	NO	REVISIONS	MADE BY	CHECK BY	DATE
2809	LIGHT OIL SYSTEM PFD	-	-	-	-	-	-					
28-05-3546	TAR BOTTOM FINAL COOLER PFD	-	-	-	-	-	-					
		-	-	-	-	-	-	0	ISSUED FOR SUBMITTAL	KMM	MS	4/25/12

THIS PRINT AND ALL INFORMATION THEREON IS THE PROPERTY OF ALABAMA BY-PRODUCTS CORPORATION AND IS CONFIDENTIAL AND MUST NOT BE MADE PUBLIC OR COPIED UNLESS SO AUTHORIZED BY THEM AND IS SUBJECT TO RETURN UPON DEMAND

	BY	DATE
DRAWN	KPB	06/01/11
CHECKED	-	-
APPROVED	-	-
APPROVED	-	-
ISSUED	-	-

ALABAMA BY-PRODUCTS CORPORATION
POWER · COKE · COAL · COAL CHEMICALS
COKE OVEN AND BY-PRODUCTS DIVISION
P.O. BOX 6507 - TARRANT BRANCH
BIRMINGHAM, ALABAMA 35217

BYPRODUCT PLANT SHT 2 OF 2
PROCESS FLOW DIAGRAM

DATE 06/01/11
SCALE AS NOTED

4056-D001B

4056-D001A

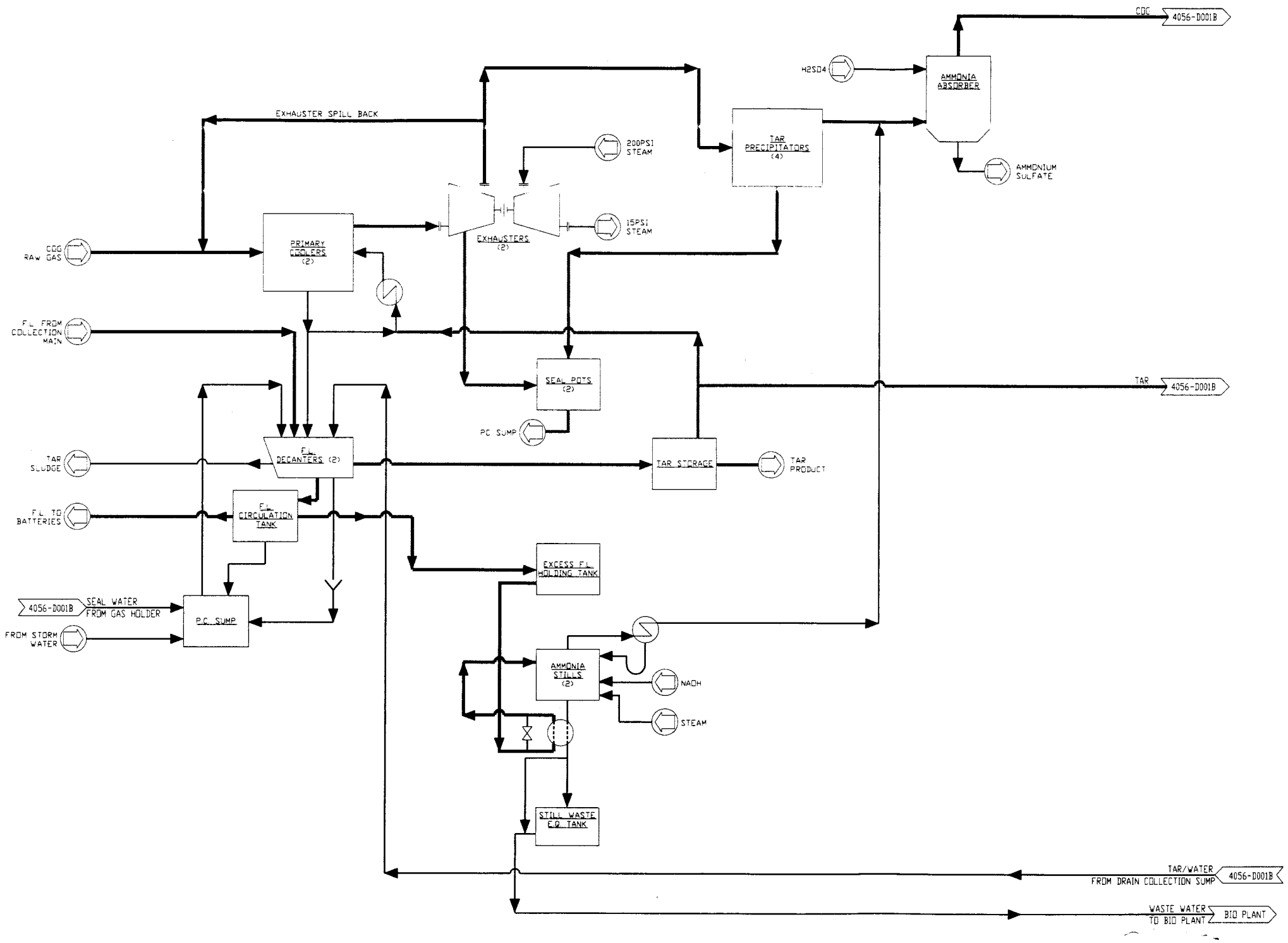

LEGEND

- COG COKE OVEN GAS
- F.L. FLUSHING LIQUOR
- L.O. LIGHT OIL
- W.O. WASH OIL
- TAR
- NORMALLY CLOSED VALVE

RESPONSE TO EPA 114(a) LETTER RECEIVED BY ABC COKE ON 1-19-12 ITEM 23(a)

NOTES:

1. INT = INTERMITTANT
2. 200,000 SCFM (WET)

TETRA TECH
ENGINEERING SERVICES GROUP
Pittsburgh, Pennsylvania 15220-2745
(412) 921-7090

DRAWN BY	DATE	PLOT DATE	CHECKED BY	DATE
HORTON	2-14-12			
DRAWING NO 4056-D001A		PLOT TIME	APPROVED BY	DATE

DRAWING NO	DESCRIPTION
5178-007-MG2	AMMONIA STILL P&ID
28-05-354b	TAR BOTTOM FINAL COOLER PFD

REFERENCES	NO	REVISIONS	MADE BY	CHECK BY	DATE	NO	REVISIONS	MADE BY	CHECK BY	DATE
						0	ISSUED FOR SUBMITTAL	KMH	MG	4/25/12

THIS PRINT AND ALL INFORMATION THEREON IS THE PROPERTY OF ALABAMA BY-PRODUCTS CORPORATION, and is confidential and must not be made public or communicated to authorized by their and is subject to return upon demand

	BY	DATE
DRAWN	RPB	06/01/11
CHECKED	-	-
APPROVED	-	-
APPROVED	-	-
ISSUED	-	-

ALABAMA BY-PRODUCTS CORPORATION
FOUNDRY COKE • COAL • COAL CHEMICALS
COKE OVEN AND BY-PRODUCTS DIVISION
P.O. BOX 6507 - TARRANT BRANCH
BIRMINGHAM, ALABAMA 35217

BYPRODUCT PLANT SHT 1 OF 2
PROCESS FLOW DIAGRAM

DATE 06/01/11
SCALE AS NOTED

4056-D001A

ABC COKE
BYPRODUCT PLANT P&IDS

INDEX OF DRAWINGS

DRAWING LIST			
DRAWING NO.	DRAWING TITLE	REVISION	REVISION DATE
4056-X001	DRAWING INDEX	D	
4056-LEG1	P & I DIAGRAM MECHANICAL LEGEND	C	
4056-LEG2	P & I DIAGRAM INSTRUMENT LEGEND	C	
4056-D001A	BYPRODUCT PLANT SHT 1 OF 3, PROCESS FLOW DIAGRAM	D	
4056-D001B	BYPRODUCT PLANT SHT 2 OF 3, PROCESS FLOW DIAGRAM	D	
4056-D001C	BYPRODUCT PLANT SHT 3 OF 3, PROCESS FLOW DIAGRAM	B	
4056-D002	BENZOL WASHERS & LIGHT OIL PLANT SHT 1 OF 3, P&ID	C	
4056-D003	BENZOL WASHERS & LIGHT OIL PLANT SHT 2 OF 3, P&ID	C	
4056-D004	BENZOL WASHERS & LIGHT OIL PLANT SHT 3 OF 3, P&ID	C	
4056-D005	EXCESS LIQUOR & STORM WATER RUNOFF, P&ID	C	
4056-D006	FLUSHING LIQUOR & TAR HANDLING, P&ID	C	
4056-D007	TAR TANKS, P&ID	C	
4056-D008	TAR BOTTOM FINAL COOLER, P&ID	C	
4056-D009	AMMONIA STILL SHT 1 OF 2, P&ID	C	
4056-D010	AMMONIA STILL SHT 2 OF 2, P&ID	C	
4056-D011	PLANT COG DISTRIBUTION, P&ID	D	
4056-G001	PLANT, PLOT PLAN SHT 1 OF 3	C	
4056-G002	PLANT, PLOT PLAN SHT 2 OF 3	C	
4056-G003	PLANT, PLOT PLAN SHT 3 OF 3	C	

RESPONSE TO EPA 114(a) LETTER
RECEIVED BY ABC COKE ON 1-19-12
ITEMS 1,2,4,15,16,17,18&23(a)

FOR REVIEW

TETRA TECH
ENGINEERING SERVICES GROUP
Pittsburgh, Pennsylvania 15220-2745
(412) 921-7090

DRAWN BY:	DATE	PLOT DATE	CHECKED BY:	DATE
HORTON	2-14-12			
DRAWING NO: 4056-X001		PLOT TIME	APPROVED BY:	DATE

BYPRODUCT PLANT P&IDS
DRAWING INDEX

DATE -
SCALE AS NOTED

4056-X001

DRAWING NO.	DESCRIPTION
REFERENCES	

NO	REVISIONS	MADE BY	CHECK BY	DATE
D	ISSUED FOR REVIEW	DCH	MS	4/9/12
C	ISSUED FOR REVIEW	DCH	MS	4/6/12
B	ISSUED FOR REVIEW	DCH	MS	4/4/12
A	ISSUED FOR REVIEW	DCH	MS	3/16/12

THIS PRINT AND ALL INFORMATION THEREON IS THE PROPERTY OF ALABAMA BY-PRODUCTS CORPORATION and is confidential and must not be made public or copied unless as authorized by them and is subject to return upon demand.

	BY	DATE
DRAWN	-	-
CHECKED	-	-
APPROVED	-	-
APPROVED	-	-
ISSUED	-	-

ALABAMA BY-PRODUCTS CORPORATION
FOUNDRY COKE COAL COAL CHEMICALS
COKE OVEN AND BY-PRODUCTS DIVISION
P.O. BOX 6507- TARRANT BRANCH
BIRMINGHAM, ALABAMA 35217

4056-LEG1

PIPE LINE SPECS

a - b - c - d - e

a — COMMODITY LIST

LIST PROCESS COMMODITIES FIRST THEN UTILITIES

- CHW - CHILLED WATER
- CON - CONDENSATE
- CTW - COOLING TOWER WATER
- CW - CITY WATER
- DRI - DRY RAW INGREDIENTS
- EBP - EPOXY BASED PRODUCTS
- FW - FIRE WATER
- GLY - GLYCOL
- HO - HOT OIL
- MON - MONOMERS
- MP - MISCELLANEOUS PROCESS
- NG - NATURAL GAS
- N2 - NITROGEN
- PA - COMPRESSED AIR
- PP - PROPANE
- PV - PROCESS VAPORS
- PW - PROCESS (RO/DI) WATER
- RI - RESIN INTERMEDIATES
- SOL - SOLVENT
- STM - STEAM
- VG - VENT GAS
- WBP - WATER BASED PRODUCTS
- WW - WASTE WATER

b — LINE NUMBER

SECTION OF PIPE LINES WITH UNIQUE NUMBERS STARTING WITH 1

c — PIPELINE SPECIFICATION OR MATERIAL OF CONSTRUCTION

SEE DWG NUMBER P-0001

d — PIPE SIZE

(NOMINAL PIPE SIZE IN INCHES)

e — INSULATION IDENTIFICATION

- A ACOUSTICALLY INSULATED
- C CONDENSATION CONTROL INSULATION
- E ELECTRICALLY TRACED & INSULATED
- H INSULATED FOR HEAT CONSERVATION
- JO OIL JACKETED
- JS STEAM JACKETED
- JW WATER JACKETED
- N NOT INSULATED
- O HOT OIL TRACED & INSULATED
- P INSULATED FOR PERSONNEL PROTECTION
- S STEAM TRACED & INSULATED
- U UNDERGROUND
- W HOT WATER TRACED & INSULATED

LINE TYPE DESIGNATION

MAJOR PROCESS PIPING	EQUIPMENT
MAJOR EXISTING PROCESS PIPING	EQUIPMENT HIDDEN
MINOR PROCESS PIPING	EQUIPMENT EXISTING
MINOR EXISTING PROCESS PIPING	VENDOR

EQUIPMENT NUMBER

A — E-1000 — B

A = EQUIPMENT TYPE B = SEQUENCE NUMBER

- A - AGITATOR, MIXER, BLENDER
- B - BLOWER, FAN, COMPRESSOR, GAS EJECTOR
- C - CONVEYOR, ELEVATOR
- E - EXCHANGER, HEATER, COOLING TOWER, BOILER
- H - HOIST
- M - MILL, GRINDER, EXTRUDER
- P - PUMP, LIQUID EJECTOR
- R - REACTOR
- S - SCREENER, FILTER, CYCLONE, DUST COLLECTOR, STRAINER, THICKENER
- T - TANK, NON-CODE VESSEL, SILO, BIN
- V - VESSEL, TOWER, DRUM
- X - MISCELLANEOUS, EQUIPMENT

INSULATION DESIGNATION

INSULATED PIPING — x/y

X = INSULATION TYPE / Y = THICKNESS

TRACED AND INSULATED PIPING — x/y

X = INSULATION TYPE / Y = THICKNESS / Z = TYPE OF TRACE

JACKETED PIPING — JX

JACKET SIZE ONE SIZE LARGER THAN INNER PIPE

INSULATED EQUIPMENT

X = INSULATION TYPE
- C = CALCIUM SILICATE
- F = FIBERGLAS
- M = MINERAL WOOL
- G = FOAMGLASS
- N = NEOPRENE

Z = TRACING TYPE
- E = ELECTRIC
- O = HOT OIL
- S = STEAM
- W = HOT WATER

VALVE SYMBOLS

GATE, GLOBE, BALL, PLUG, CHECK, NOTE BFPA = BACKFLOW PREVENTER ASSY, BUTTERFLY, NEEDLE, ANGLE, 3 WAY, 4 WAY, DRAIN, VENT, DIAPHRAGM, PINCH, CHOKE, HAND, COCK, VALVE PLUG, VALVE HANDLE, FLOAT, Y, QUICK-OPEN GATE, QUICK-OPEN GLOBE, SLIDE VALVE, M ROTARY

TYPICAL VALVE TAG

VALVE TAG NO — a

VALVE SIZE (IN.) — b

VOC NO. — c

PUMPS & BLOWERS

- M CENTRIFUGAL PUMP
- M GEAR PUMP
- AIR DRIVEN DUAL DIAPHRAGM PUMP
- M METERING PUMP
- DRUM PUMP
- M RECIPROCATING PUMP
- M AIR COMPRESSOR
- M VACUUM PUMP
- MIXING NOZZLE
- MOTOR DRIVEN THREE STAGE COMPRESSOR
- M WELL PUMP
- AIR DRIVEN DIAPHRAGM PUMP
- M INLINE PUMP
- M SCREW PUMP
- M CANNED MOTOR OR MAG-DRIVE
- M CENTRIFUGAL BLOWER
- M ROTARY BLOWER/ COMPRESSOR
- PISTON COMPRESSOR
- EJECTOR
- DUAL DRIVE SINGLE STAGE COMPRESSOR

DRIVERS

- M MOTOR
- TURBINE
- PISTON

MISCELLANEOUS EQUIPMENT

- EXTRUDER
- FUNNEL
- ROLLER MILL
- CYCLONE
- BALL MILL
- HAMMER MILL
- G SUPPORT
- EMERGENCY GENERATOR

DRUMS & TOWERS

- ASME DRUM
- PACKED TOWER
- DRUM WITH DISHED HEADS
- DRUM WITH BULLET HEADS
- DRUM WITH DEMISTER

EXCHANGERS

- HT EXCH
- DOUBLE PIPE
- AIR-EXCHANGER
- FURNACE
- COOLING TOWER
- TEMA E
- TEMA F
- TEMA G
- TEMA H
- TEMA J & X
- TEMA K
- TEMA EU
- A
- B
- C
- N

MIXERS & AGITATORS

- M AGITATOR HEAD
- M STATIC MIXER
- M PROPELLER
- M PITCHED BLADE
- M ANCHOR
- M RADIAL
- M DISPERSER

CONVEYORS

- M BELT CONVEYOR
- M SCREW CONVEYOR/FEEDER
- M BUCKET ELEV
- M VIBRATION SCREENER

FILTERS & THICKENERS

- LEAF FILTER
- DRUM FILTER
- CARTRIDGE FILTER
- GRAVITY THICKENER
- BAG HOUSE
- GAF FILTER
- PRESS FILTER
- CUNO FILTER
- SINGLE OR DOUBLE BAG FILTER

MISCELLANEOUS SYMBOLS

- EXPANSION JOINT
- IN-LINE FLEXIBLE HOSE
- FLEXIBLE HOSE
- HOSE CONNECTION (MALE)
- HOSE CONNECTION (FEMALE)
- PIPE CAP
- SWIVEL
- TEMPORARY STRAINER
- Y - STRAINER
- Y - STRAINER w/VALVE
- Y - STRAINER w/BALL VALVE
- PULSATION DAMPENER
- TP # TIE-POINT
- DP # DISMANTLE POINT
- T STEAM TRAP
- DRAIN
- SIGHT GLASS
- GAGE GLASS INTEGRALLY MOUNTED TO TANK
- BASKET STRAINER
- BASKET STRAINER w/VALVE
- FILTER
- MANWAY
- COUPLING
- NOZZLE
- NOZZLE
- REDUCER - CONC
- REDUCER - ECC.
- ELECTRONIC BREAK
- PIPE BREAK
- ARROW
- ARROW
- FLOOR

DWG. NO. | SIZE | COMMODITY FROM DESCRIPTION — FROM ARROW

COMMODITY | SIZE TO DESCRIPTION | DWG. NO — TO ARROW

SIZE | COMMODITY FROM DESCRIPTION — FROM COMMODITY

COMMODITY | SIZE TO DESCRIPTION — TO COMMODITY

RESPONSE TO EPA 114(a) LETTER
RECEIVED BY ABC COKE ON 1-19-12
ITEM 2

FOR REVIEW

TETRA TECH
ENGINEERING SERVICES GROUP
Pittsburgh, Pennsylvania 15220-2745
(412) 921-7090

DRAWN BY:	DATE	PLOT DATE	CHECKED BY:	DATE
HORTON	3-16-12			
DRAWING NO		PLOT TIME	APPROVED BY:	DATE
4056-LEG1				

DRAWING NO	DESCRIPTION	REFERENCES	NO	REVISIONS	MADE BY	CHECK BY	DATE	NO	REVISIONS	MADE BY	CHECK BY	DATE
-	-		-	-	-	-	-	-	-	-	-	-
-	-		-	-	-	-	-	-	-	-	-	-
-	-		-	-	-	-	-	C	ISSUED FOR REVIEW	DCH	MS	4/6/12
			-	-	-	-	-	B	ISSUED FOR REVIEW	DCH	MS	4/4/12
			-	-	-	-	-	A	ISSUED FOR REVIEW	DCH	MS	3/15/12

THIS PRINT AND ALL INFORMATION THEREON IS THE PROPERTY OF ALABAMA BY-PRODUCTS CORPORATION and is confidential and must not be made public or copied unless so authorized by them and is subject to return upon demand.

	BY	DATE
DRAWN	K HARTLEY	03/11/10
CHECKED	-	-
APPROVED	-	-
APPROVED	-	-
ISSUED	-	-

ALABAMA BY-PRODUCTS CORPORATION
FOUNDRY COKE • COAL • COAL CHEMICALS
COKE OVEN AND BY-PRODUCTS DIVISION
P.O. BOX 6507 - TARRANT BRANCH
BIRMINGHAM, ALABAMA 35217

ABC COKE
BYPRODUCT PLANT
P & I DIAGRAM MECHANICAL LEGEND

DATE
SCALE NTS

4056-LEG1

FUNCTION IDENTIFICATION LETTER CODE
(FOR NEW INSTRUMENT TAGS)

	FIRST LETTER		SUCCEEDING LETTERS		
	MEASURED VARIABLE	MODIFIER	PASSIVE FUNCTION	OUTPUT FUNCTION	MODIFIER
A	ANALYSIS		ALARM		
B	BURNER, COMBUSTION				
C	USER'S CHOICE			CONTROL	CLOSED, CONTROL
D	DENSITY	DIFFERENTIAL			
E	VOLTAGE		SENSOR (ELEMENT)		
F	FLOW	RATIO (FRACTION)			FORWARD
G	USER'S CHOICE		GLASS, VIEWING DEVICE		
H	HAND (MANUAL)				HIGH
I	CURRENT (ELECTRICAL)		INDICATE	INDICATE	INDICATE
J	POWER	SCAN			
K	TIME, TIME SCHEDULE	TIME RATE OF CHANGE		CONTROL STATION	
L	LEVEL		LIGHT		LOW
M	MOISTURE/HUMIDITY	MOMENTARY			MIDDLE, INTERMEDIATE
N	USER'S CHOICE				
O	OPERATION		ORIFICE, RESTRICTION		OPENED, ON
P	PRESSURE		TEST POINT		
Q	QUANTITY	INTEGRATE, TOTALIZE			
R	RADIATION	RELIEF	RECORD		REVERSE
S	SPEED, FREQUENCY	SAFETY	SET POINT	SWITCH	
T	TEMPERATURE			TRANSMIT	
U	MULTIVARIABLE		MULTIFUNCTION	MULTIFUNCTION	MULTIFUNCTION
V	VIBRATION, MECHANICAL ANALYSIS			VALVE, VACUUM	
W	WEIGHT, FORCE		WELL		
X	UNCLASSIFIED	X AXIS	UNCLASSIFIED	UNCLASSIFIED	UNCLASSIFIED
Y	EVENT, PRESENCE, MOTOR	Y AXIS		RELAY, COMPUTE, CONVERT	
Z	POSITION, DIMENSION	Z AXIS		DRIVER, ACTUATOR	

DEVICES

		AUX PANEL	VENDOR
LOCALLY MOUNTED	?		?
PANEL MOUNTED	?	?	?
LOCALLY MOUNTED LIGHT	?		?
PANEL MOUNTED LIGHT	?	?	?

FUNCTION SYMBOLS

	PLC	
DISPLAYED ON CRT	?	
BLIND FUNCTION	?	
MANUAL BACKUP		

DEVICE TAGGING

FICX-1000A

- SEE BELOW
- SEE BELOW
- MEASURED VARIABLE
- MODIFIER (IF ANY)
- PASSIVE FUNCTION, OUTPUT FUNCTION (OR BOTH)
- MODIFIER (IF ANY)
- FUNCTION BLOCK
- INSTRUMENT NUMBER

% = CONVERTER (SEE OPTION LEGEND BELOW)

THE FORM OF THE OUTPUT SIGNAL IS DIFFERENT FROM THAT OF THE INPUT

POSSIBLE OPTIONS

A = ANALOG
B = BINARY
D = DIGITAL
E = VOLTAGE
F = FIBER OPTIC
H = HYDRAULIC
I = CURRENT
O = ELECTROMAGNETIC SONIC
P = PNEUMATIC
R = RESISTANCE (ELECTRIC)

FUNCTION BLOCKS

- S_T = START
- S_P = STOP
- S_{S} = START / STOP
- I-O = ON / OFF
- A_M = AUTO / MANUAL
- H_{OA} = HAND / OFF / AUTO
- > = HIGH LIMIT
- < = LOW LIMIT
- > = HIGH SELECT
- < = LOW SELECT
- A/B = CONVERTER
- $\sqrt{\ }$ = SQRT
- S_C = USER SELECT
- Σ = SUMMATION
- X = MULTIPLY
- ÷ = DIVIDE
- √ = SQUARE ROOT
- % = GAIN OR ATTENUATE / RATIO
- ∫ = INTEGRAL
- Δ = DIFFERENTIAL
- Σ/n = AVERAGE
- ± = BIAS
- 1:1 = BOOST
- F(t) = TIME FUNCTION
- F(x) = USER DEFINED

INSTRUMENT LINE DESIGNATION

- PNEUMATIC SIGNAL
- CAPILLARY TUBING
- ELECTRIC SIGNAL
- MECHANICAL LINK
- SOFTWARE OR DATA LINK
- ELECTROMAGNETIC OR SONIC (GUIDED)
- ELECTROMAGNETIC OR SONIC (NOT GUIDED)
- HYDRAULIC SIGNAL

ACTUATOR SYMBOLS

- IA, F? — DIAPHRAGM
- PRESSURE BAL DIAPHRAGM
- IA, F? — DIAPHRAGM WITH ELECTRO/PNEUMATIC ACTUATOR
- F? — CYLINDER
- M, F? — ROTARY MOTOR
- S, F? — SOLENOID WITH LATCH
- PRESSURE OR VACUUM RELIEF
- E/H, F? — ELECTRO-HYDRAULIC
- PRESSURE REG SELF-CONTAINED
- BACK PRESSURE REG. W/EXT PRESSURE TAP
- S, F? — SOLENOID
- S — 3-WAY SOLENOID
- S — 4-WAY SOLENOID
- S S — DUAL SOLENOID

MISCELLANEOUS SYMBOLS

- IA — INSTRUMENT AIR
- ES — INSTRUMENT POWER
- R — RESET
- I — HARD-WIRED INTERLOCK FUNCTION
- I — SOFTWARE INTERLOCK FUNCTION
- P — INSTRUMENT PURGE
- ILLUMINATOR
- DIAPHRAGM SEAL
- ? — COMPUTER FUNCTION

PRESSURE DEVICES

- PI 1, PI 2 — DIRECT CONN. — PRESSURE INDICATOR; STEAM SIPHON
- PI 3 — PRESSURE IND CONNECTED TO DIAPHRAGM SEAL
- PSET VSET PVRV 4 — PRESSURE & VACUUM RELIEF VALVE
- PSET VSET PSV 5 TANK — PRESSURE & VACUUM RELIEF MANHOLE COVER
- P SET PSV 6 — PRESSURE RELIEF OR SAFETY VALVE
- V SET PSV 7 — VACUUM RELIEF VALVE
- P PSV 8 — PILOT OPERATED RELIEF VALVE
- P PSV 9 — PILOT OPERATED RELIEF VALVE W/MANUAL UNLOADER
- PSET PSE 10 — RUPTURE DISK OR SAFETY HEAD FOR PRESSURE RELIEF
- VSET PSE 11 — RUPTURE DISK OR SAFETY HEAD FOR VACUUM RELIEF
- PCV 12 — PRESSURE REDUCING REG SELF-CONTAINED
- PCV 13 — BACK-PRESSURE REG SELF-CONTAINED
- PCV 14 — PRESSURE REDUCING REG. W/EXT PRESSURE TAP
- PCV 15 — BACK-PRESSURE REDUCING REG. W/EXT PRESSURE TAP

VALVE STATUS

- FC FAIL CLOSED
- FO FAIL OPEN
- FL FAIL LAST
- NO NORMALLY OPEN
- NC NORMALLY CLOSED
- CSO CAR SEAL OPENED
- CSC CAR SEAL CLOSED

FLOW DEVICES

- FE 1 — GENERAL SYMBOL
- FE 2 — ORIFICE PLATE
- FE 3 — FLOW STRAIGHTENING VANE
- FE 4 — ORIFICE PLATE IN QUICK-CHANGE FITTING
- FE 5 — VENTURI TUBE
- FE 6 — AVERING PITOT TUBE
- FE 7 — WEIR
- FE 8 — TURBINE OR PROPELLER TYPE
- FE 9 — POSITIVE DISPLACEMENT TYPE
- FE 10 — VORTEX SENSOR
- FE 11 — FLOW NOZZLE
- FE 12 — MAGNETIC FLOWMETER
- FE 13 — FLUME
- FE 14 — SINGLE PORT PITOT TUBE OR PITOT VENTURI TUBE
- FT 17, FE 17 — ORIFICE PLATE WITH DP TRANSMITTER
- FI 16 — VARIABLE AREA FLOW INDICATOR
- FO 18 — RESTRICTING ORIFICE PLATE
- FE 19 — TARGET TYPE SENSOR
- FE 20 — CORIOLIS METER
- FE 21 — WEDGE FLOW ELEMENT

LEVEL DEVICES

- TANK LG 1 — GAGE GLASS, INTEGRALLY MOUNTED ON TANK
- TANK LG 2 — GAGE GLASS, EXTERNALLY CONNECTED
- TANK LI 3 — LEVEL INDICATOR WITH TWO CONNECTIONS
- TANK LT 4 — LEVEL TRANSMITTER WITH ONE CONNECTION
- LT 5 TANK — CAPACITANCE OR DIELECTRIC TYPE LEVEL ELEMENT
- LS 6 TANK — LEVEL SWITCH, PADDLE WHEEL OR LEVER TYPE
- LX 7 ~ ~ LT 7 — RADIOACTIVE - OR SONIC - TYPE LEVEL TRANS. W/INTEGRAL SENSOR
- TANK LG 8 — LEVEL GLASS WITH ILLUMINATOR
- LI 9 TANK — LOCAL FLOAT TYPE LEVEL INDICATOR

ALARM DEVICES

- LAHH 1, LAH 2, LAL 3, LALL 4 — SEPARATE ALARMS FOR ABNORMAL LEVEL - VERY HIGH, HIGH, LOW & VERY LOW
- TSH 5, TSL 5, TAHL 5 — COMMON ALARM ANNUNCIATOR FOR HIGH & LOW TEMPERATURE
- BSE — FLAME ARRESTER

RESPONSE TO EPA 114(a) LETTER RECEIVED BY ABC COKE ON 1-19-12 ITEM 2

FOR REVIEW

TETRA TECH
ENGINEERING SERVICES GROUP
Pittsburgh, Pennsylvania 15220-2745
(412) 921-7090

DRAWN BY:	DATE	PLOT DATE	CHECKED BY:	DATE
HORTON	3-16-12			
DRAWING NO 4056-LEG2		PLOT TIME	APPROVED BY	DATE

DRAWING NO	DESCRIPTION	REFERENCES	NO	REVISIONS	MADE BY	CHECK BY	DATE	NO	REVISIONS	MADE BY	CHECK BY	DATE
-	-		-	-	-	-	-	-	-	-	-	-
-			-	-	-	-	-	-	-	-	-	-
-			-	-	-	-	-	C	ISSUED FOR REVIEW	DCH	MS	4/6/12
-			-	-	-	-	-	B	ISSUED FOR REVIEW	DCH	MS	4/4/12
			-	-	-	-	-	A	ISSUED FOR REVIEW	DCH	MS	3/16/12

THIS PRINT AND ALL INFORMATION THEREON IS THE PROPERTY OF ALABAMA BY-PRODUCTS CORPORATION and is confidential and must not be made public or copied unless so authorized by them and is subject to return upon demand.

	BY	DATE
DRAWN	K.HARTLEY	03/11/10
CHECKED	-	-
APPROVED	-	-
APPROVED	-	-
ISSUED	-	-

ALABAMA BY-PRODUCTS CORPORATION
FOUNDRY COKE • COAL • COAL CHEMICALS
COKE OVEN AND BY-PRODUCTS DIVISION
P.O. BOX 6507 - TARRANT BRANCH
BIRMINGHAM, ALABAMA 35217

ABC COKE
BYPRODUCT PLANT
P & I DIAGRAM INSTRUMENT LEGEND

DATE
SCALE N.T.S
4056-LEG2

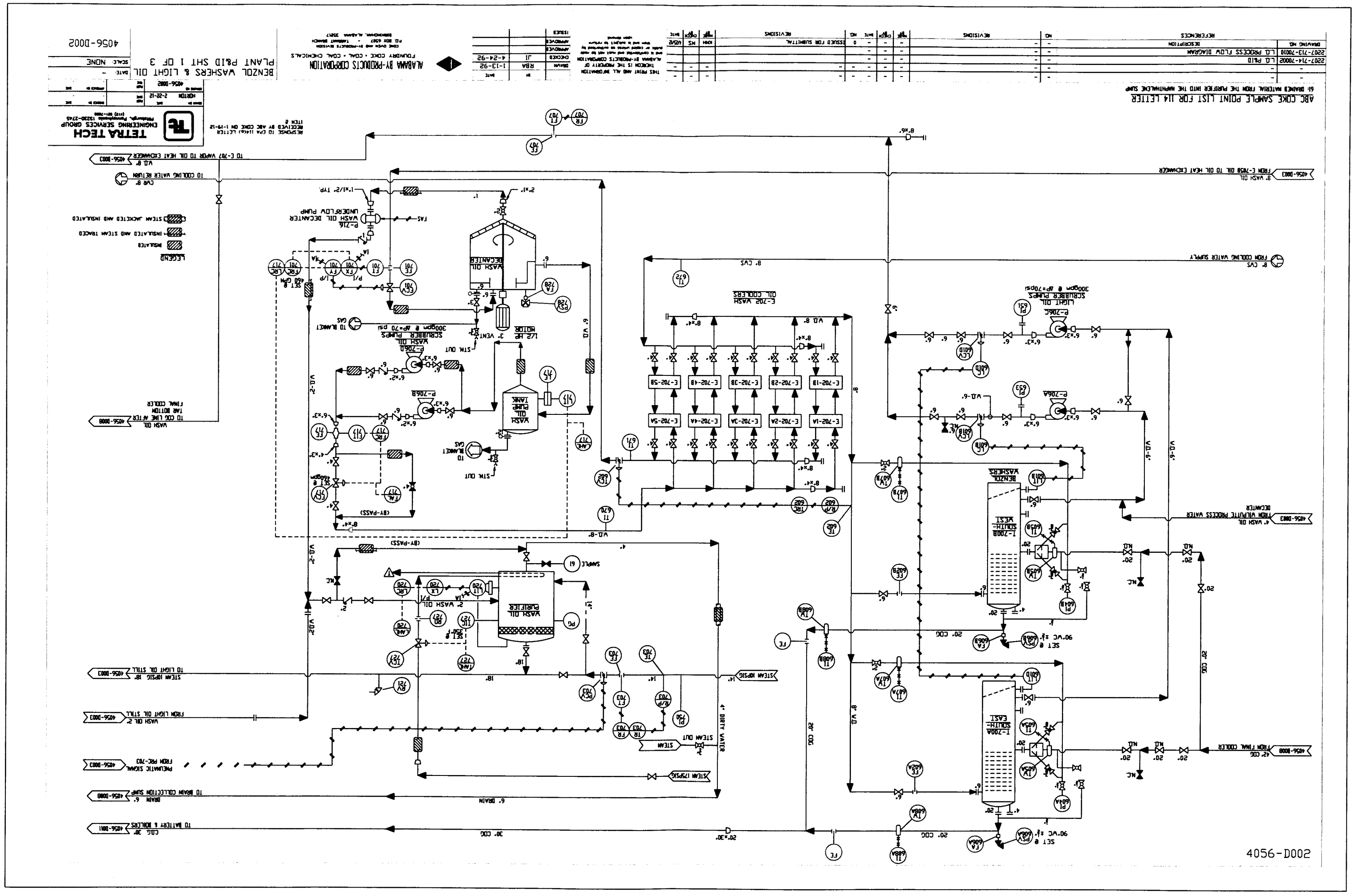
ABC COKE SAMPLE POINT LIST FOR 114 LETTER
6: DRAINED MATERIAL FROM THE PAPERER INTO THE MAMTHALENE SUMP
REFERENCES
REVISIONS
ISSUED FOR SUBMITTAL
THIS PRINT AND ALL INFORMATION THEREON IS THE PROPERTY OF ALABAMA BY-PRODUCTS CORPORATION and is confidential and must not be made public or copied unless as authorized by ABC and is subject to return upon demand.
ALABAMA BY-PRODUCTS CORPORATION
FOUNDRY COKE • COAL • COAL CHEMICALS
COKE OVEN AND BY-PRODUCTS DIVISION
P.O. BOX 6307 - TRUSSVILLE BRANCH
BIRMINGHAM, ALABAMA 35217
BENZOL WASHERS & LIGHT OIL
PLANT P&ID SHT 1 OF 3
SCALE NONE
4056-D002
TETRA TECH
ENGINEERING SERVICES GROUP
Pittsburgh, Pennsylvania 15230-2745
(412) 921-7000
RESPONSE TO CPA 114(6) LETTER
RECEIVED BY ABC COKE ON 1-19-12
ITEM 2
4056-D003
8" WASH OIL
FROM E-702B OIL TO OIL HEAT EXCHANGER
8" CWS
FROM COOLING WATER SUPPLY
TO E-702 VAPOR TO OIL HEAT EXCHANGER
TO COOLING WATER RETURN
LEGEND
INSULATED
INSULATED AND STEAM TRACED
STEAM JACKETED AND INSULATED
E-702 WASH OIL COOLERS
LIGHT OIL SCRUBBER PUMPS
300gpm @ ΔP=70psi
P-706C
P-706A
BENZOL WASHERS
I-700B SOUTH-WEST
I-700A SOUTH-EAST
4" WASH OIL FROM VULPOTIT PROCESS WATER DECANTER
42" CCG FROM FINAL COOLER
20" CCG
8" VO
VO-6
VO-8
VO-2
WASH OIL PURIFIER
2" WASH OIL
WASH OIL DECANTER
P-716 WASH OIL DECANTER UNDERFLOW PUMP
WASH OIL PUMP TANKS
1/2 HP MOTOR
P-706D WASH OIL SCRUBBER PUMPS
300gpm @ ΔP=70 psi
P-706B
STM OUT
TO BLANKET GAS
(BY-PASS)
SET @ 460 GPM
SET @ 460gpm
SAMPLE
4" DIRTY WATER
STEAM OUT
STEAM 125PSIG
STEAM 10PSIG
6" DRAIN
20" CCG
VASH OIL FROM PRC-702 PNEUMATIC SIGNAL 4056-D003
VASH OIL 2" FROM LIGHT OIL STILL 4056-D003
STEAM 10PSIG 18" TO LIGHT OIL STILL 4056-D003
VASH OIL 6" TO BRAIN COLLECTION SUMP 4056-D008
COG 30" TO BATTERY & BOILERS 4056-D001
VASH OIL 10" TO COG LINE AFTER TAR BOTTOM FINAL COOLER 4056-D008
TO E-702 VAPOR TO OIL HEAT EXCHANGER 4056-D003
TO COOLING WATER RETURN
4056-D002

4056-D003

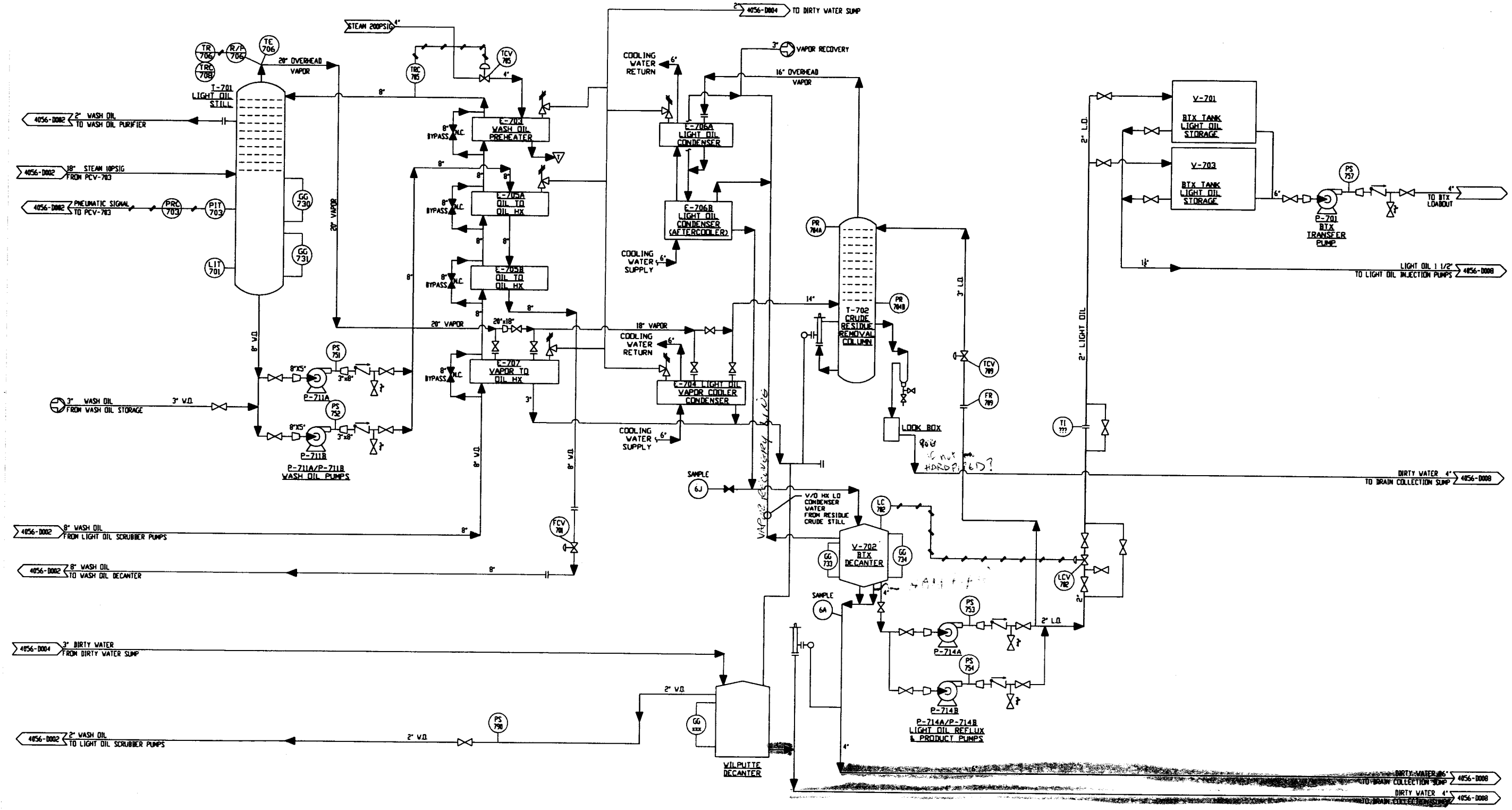

RESPONSE TO EPA 114(a) LETTER
RECEIVED BY ABC COKE ON 1-19-12
ITEM 2

ABC COKE SAMPLE POINT LIST FOR 114 LETTER

6A AQUEOUS SOLUTION FROM THE BTX TANK DECANT OVERFLOW
6J LIGHT OIL PLATFORM CONDENSATE

DRAWING NO.	DESCRIPTION
-	-
-	-
-	-
723-3600-0237	FLOW DIAGRAM L.O. RECOVERY SYSTEM

REFERENCES

NO.	REVISIONS	MADE BY	CHECK BY	DATE
-	-	-	-	-
-	-	-	-	-
-	-	-	-	-
-	-	-	-	-
-	-	-	-	-
0	ISSUED FOR SUBMITTAL	KMH	MS	4/25/12

REVISIONS

THIS PRINT AND ALL INFORMATION THEREON IS THE PROPERTY OF ALABAMA BY-PRODUCTS CORPORATION and is confidential and must not be made public or copied unless so authorized by them and is subject to return upon demand.

	BY	DATE
DRAWN	RBA	1-13-92
CHECKED	JI	4-24-92
APPROVED		
APPROVED		
ISSUED		

ALABAMA BY-PRODUCTS CORPORATION
FOUNDRY COKE • COAL • COAL CHEMICALS
COKE OVEN AND BY-PRODUCTS DIVISION
P.O. BOX 6087 - TARRANT BRANCH
BIRMINGHAM, ALABAMA 35217

TETRA TECH
ENGINEERING SERVICES GROUP
Pittsburgh, Pennsylvania 15220-2748
(412) 921-7090

DRAWN BY HORTON	DATE 2-22-12	PLOT DATE	CHECKED BY / DATE
DRAWING NO. 4056-D003		PLOT DATE	APPROVED BY / DATE

BENZOL WASHERS & LIGHT OIL PLANT P&ID SHT 2 OF 3

DATE: -
SCALE: NONE

4056-D003

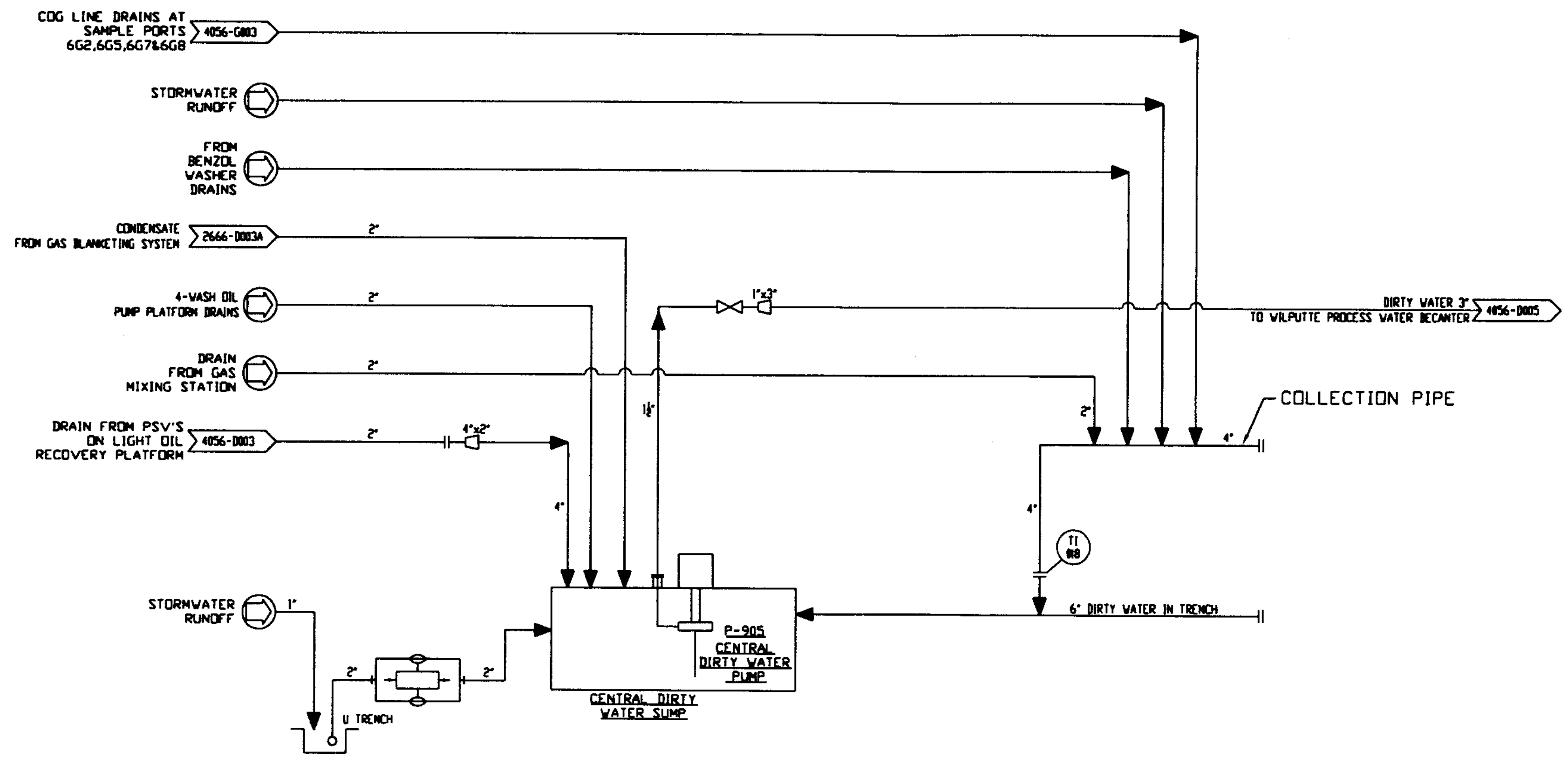

RESPONSE TO EPA 114(a) LETTER RECEIVED BY ABC COKE ON 1-19-12 ITEMS 2

ABC COKE SAMPLE POINT LIST FOR 114 LETTER

NONE

DRAWING NO.	DESCRIPTION
-	-
-	-
-	-
28-02-2949	CENTRAL DIRTY WATER SUMP, P&ID

REFERENCES

NO.	REVISIONS	MADE BY	CHECK BY	DATE
0	ISSUED FOR SUBMITTAL	KMH	MS	4/25/12

THIS PRINT AND ALL INFORMATION THEREON IS THE PROPERTY OF ALABAMA BY-PRODUCTS CORPORATION and is confidential and must not be made public or copied unless so authorized by them and is subject to return upon demand.

	BY	DATE
DRAWN	RBA	1-13-92
CHECKED	JI	4-24-92
APPROVED		
APPROVED		
ISSUED		

ALABAMA BY-PRODUCTS CORPORATION
FOUNDRY COKE • COAL • COAL CHEMICALS
COKE OVEN AND BY-PRODUCTS DIVISION
P.O. BOX 6587 - TARRANT BRANCH
BIRMINGHAM, ALABAMA 35217

TETRA TECH
ENGINEERING SERVICES GROUP
Pittsburgh, Pennsylvania 15220-2745
(412) 921-7090

DRAWN BY: HORTON 2-27-12
DRAWING NO. 4056-D004

BENZOL WASHERS & LIGHT OIL PLANT P&ID SHT 3 OF 3

DATE: -
SCALE: NONE

4056-D004

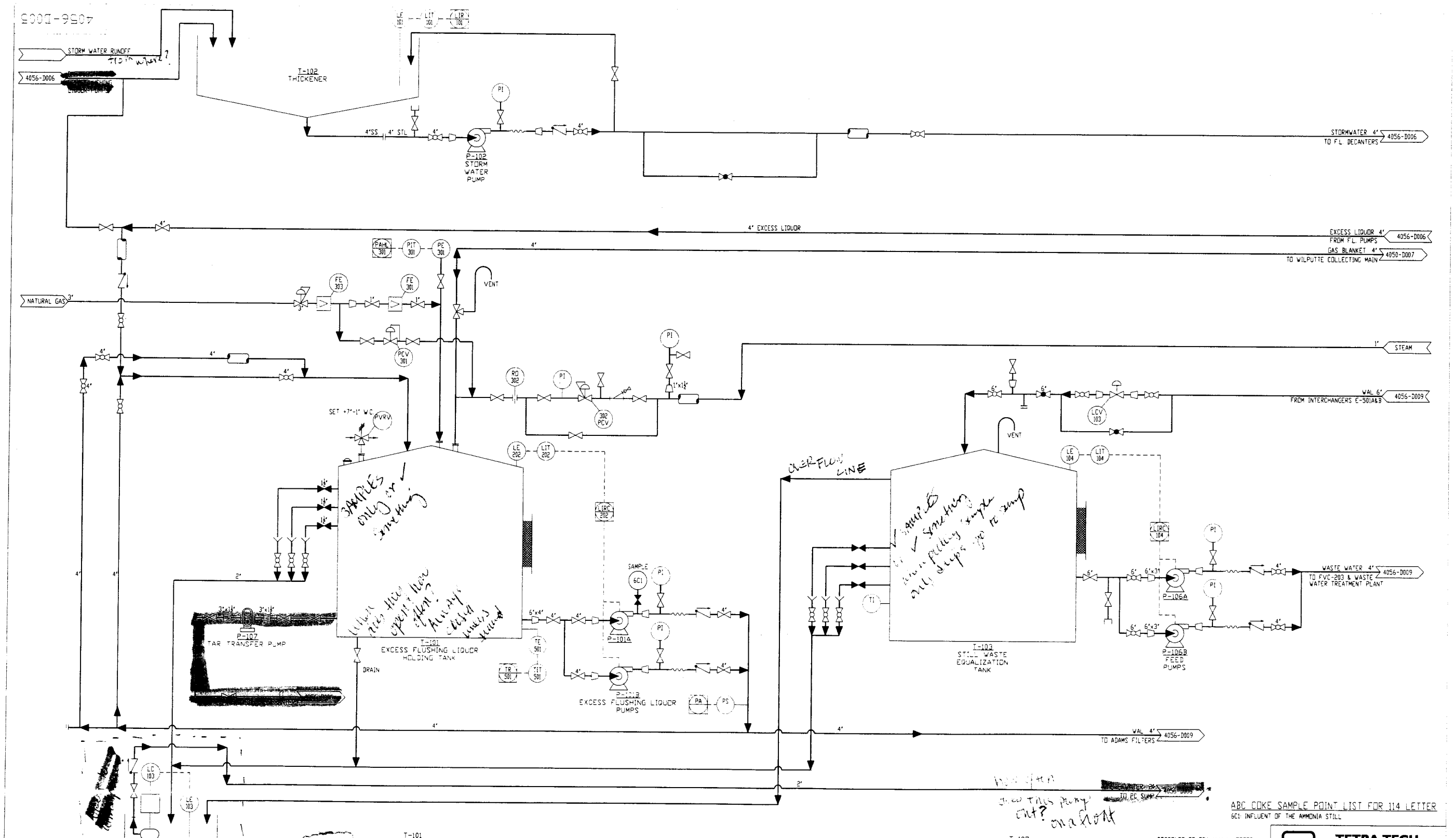

ABC COKE SAMPLE POINT LIST FOR 114 LETTER

6C1 INFLUENT OF THE AMMONIA STILL

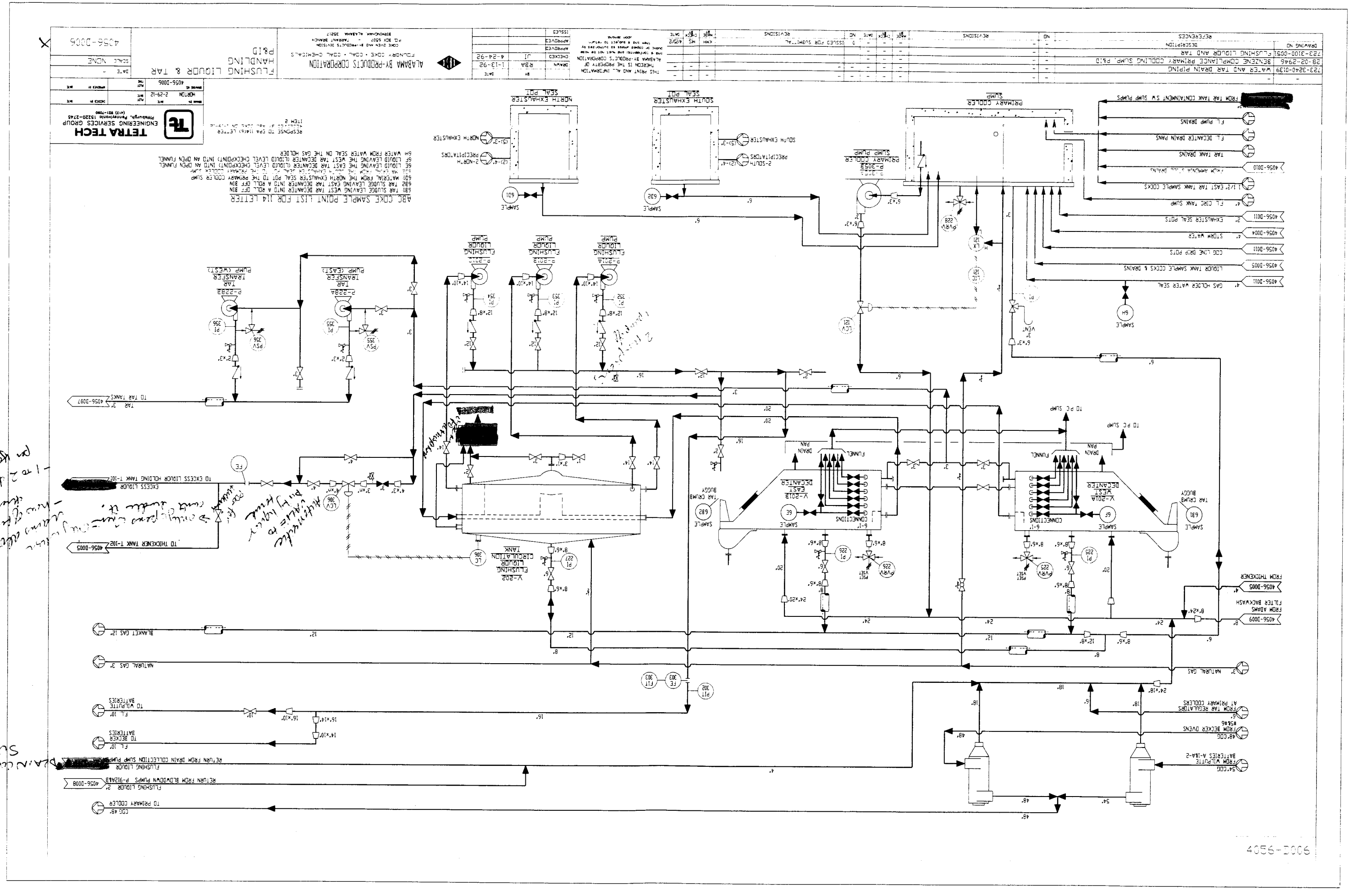
FLUSHING LIQUOR & TAR HANDLING P&ID
ALABAMA BY-PRODUCTS CORPORATION
COKE OVEN AND BY-PRODUCTS DIVISION
P.O. BOX 6507 - TARRANT BRANCH
BIRMINGHAM, ALABAMA 35217
FLUSHING LIQUOR & TAR
SCALE NONE
4056-D006
TERRA TECH
ENGINEERING SERVICES GROUP
Pittsburgh, Pennsylvania 15220-2745
(412) 921-7090
ABC COKE SAMPLE POINT LIST FOR 114 LETTER
RESPONSE TO EPA 114(a) LETTER
ITEM 2
6H WATER FROM WATER SEAL ON THE GAS HOLDER
6F LIQUID LEAVING THE WEST TAR DECANTER (LIQUID LEVEL CHECKPOINT) INTO AN OPEN FUNNEL
6E LIQUID LEAVING THE EAST TAR DECANTER (LIQUID LEVEL CHECKPOINT) INTO AN OPEN FUNNEL
6D NH3SBW FROM THE NORTH EXHAUSTER SEAL POT TO THE PRIMARY COOLER SUMP
6C TAR SLUDGE LEAVING EAST TAR DECANTER INTO A ROLL OFF BIN
6B TAR SLUDGE LEAVING WEST TAR DECANTER INTO A ROLL OFF BIN
6A NH3SBW FROM THE SOUTH EXHAUSTER SEAL POT TO THE PRIMARY COOLER SUMP
WATER AND TAR DRAIN PIPING
BENZENE COMPLIANCE PRIMARY COOLING SUMP, P&ID
FLUSHING LIQUOR AND TAR
TO TAR TANKS
TO THICKENER TANK T-102
TO EXCESS LIQUOR HOLDING TANK T-101
TO PRIMARY COOLER
RETURN FROM BLOWDOWN PUMPS P-912A&B
RETURN FROM DRAIN COLLECTION SUMP PUMPS
TO WILPUTTE BATTERIES
TO BECKER BATTERIES
FROM WILPUTTE BATTERIES A-1&A-2
FROM BECKER OVENS #5&6
FROM TAR REGULATORS AT PRIMARY COOLERS
NATURAL GAS
BLANKET GAS
FROM THICKENER
FROM ADAMS FILTER BACKWASH
FROM TAR TANK CONTAINMENT S/W SUMP PUMPS
FL PUMP DRAINS
FL DECANTER DRAIN PANS
TAR TANK DRAINS
FROM AMMONIA & ALL DRAINS
1 1/2" EAST TAR TANK SAMPLE COCKS
FL CIRC TANK SUMP
EXHAUSTER SEAL POTS
STEAM WATER
COG LINE DRIP POTS
LIQUOR TANK SAMPLE COCKS & DRAINS
GAS HOLDER WATER SEAL
PRIMARY COOLER SUMP
SOUTH EXHAUSTER SEAL POT
NORTH EXHAUSTER SEAL POT
FLUSHING LIQUOR PUMP
TRANSFER TAR PUMP (EAST)
TRANSFER TAR PUMP (WEST)
FLUSHING LIQUOR CIRCULATION TANK
V-202 FLUSHING LIQUOR
V-201A WEST DECANTER
V-201B EAST DECANTER
TAR DRUMS
TO PC SUMP
DRAIN PAN
FUNNEL
CONNECTIONS
SAMPLE
COG 49"
TO PRIMARY COOLER
FLUSHING LIQUOR 2"
4056-D008
54"COG
FROM WILPUTTE BATTERIES A-1&A-2
48"COG
FROM BECKER OVENS #5&6
FROM TAR REGULATORS AT PRIMARY COOLERS
NATURAL GAS 3"
BLANKET GAS 12"
4056-D007
TAR 3"
4056-D005
4056-D009
4056-D010
4056-D011
4056-D004
4056-D011
4056-D005
4056-D011
4056-D011
4056-D010
4056-D006

4056-D007

4050-D005 — 4" GAS BLANKET FROM T-101 VENT

4056-D006 — 3" TAR FROM TAR DECANTERS

2" 100PSIG STEAM

2666-D004 — 12" BLANKET GAS

TAR 2" FROM TAR RETURN PUMPS P-911A&B — 4056-D008

STEAM CONDENSATE 2"

NATURAL GAS FOR BUBBLE PIPES 1" FROM UTILITY

BLANKET GAS 16" TO WILPUTTE COLLECTING MAIN — 2666-D005-A

OVERFLOW LINE TO F.L. DECANTER — 4056-D006

SLOPE DN

FIR 151 · LR 151 · LX 151 · FIR 154 · LR 154 · LX 154

PVRV 224 · PVRV 223 · PI 300A · PI 300B · PI 300C · PI 300D · PI 300E · PI 300F · PI 162 · PI 161

(TYP 12) · (TYP 6)

EAST TAR TANK 23,000 GAL

WEST TAR TANK 175,000 GAL

P-902A TAR CIRC PUMP (WEST)

P-902B TAR CIRC PUMP (EAST)

TS 152 · TS 153

TAR 6" TO LOAD-OUT

25PSIG · PSE 151B · SET 140PISG · PSV 155B · PSE 137B · 140PSIG

P-903B TAR TRANSFER TO FINAL COOLER PUMP (WEST)

25PSIG · PSE 151A · SET 140PISG · PSV 155A · PSE 137A · 140PSIG

P-903A TAR TRANSFER TO FINAL COOLER PUMP (WEST)

TAR 2" TO TAR BOTTOM FINAL COOLER — 4056-D008

25PSIG · PSE · SET 140PISG · PSV · PSE · 140PSIG · PI

TAR TRANSFER TO PRIMARY COOLER PUMP

TAR — TO PRIMARY COOLER

TO PRIMARY COOLER SUMP — 4056-D006

TAR 2" — 4056-D006 — TO PRIMARY COOLER SUMP

[redacted] ~~under ground!~~ [illegible] FROM PAN under CONTAINMENT & tel tanks

ABC COKE SAMPLE POINT LIST FOR 114 LETTER

NONE

RESPONSE TO EPA 114(a) LETTER DATED OCT 31, 1991 ITEM 2

DRAWING NO	DESCRIPTION
28-03-2945	BENZENE COMPLIANCE TAR TANKS
723-3100-0051	FLUSHING LIQUOR AND TAR

REFERENCES

NO	REVISIONS	MADE BY	CHECK	DATE
0	ISSUED FOR SUBMITTAL	KMH	MS	4/25/12

THIS PRINT AND ALL INFORMATION THEREON IS THE PROPERTY OF ALABAMA BY-PRODUCTS CORPORATION and is confidential and must not be made public or copied unless so authorized by them and is subject to return upon demand.

	BY	DATE
DRAWN	RBA	1-13-92
CHECKED	JI	4-24-92
APPROVED		
APPROVED		
ISSUED		

ALABAMA BY-PRODUCTS CORPORATION
FOUNDRY COKE • COAL • COAL CHEMICALS
COKE OVEN AND BY-PRODUCTS DIVISION
P.O. BOX 4507 - TARRANT BRANCH
BIRMINGHAM, ALABAMA 35217

TETRA TECH
ENGINEERING SERVICES GROUP
Pittsburgh, Pennsylvania 15220-2745
(412) 921-7090

DRAWN BY	DATE	PLOT DATE	CHECKED BY	DATE
HORTON	2-28-12			
DRAWING NO 4056-D007		PLOT TIME	APPROVED BY	DATE

TAR TANKS
P&ID

DATE -
SCALE NONE

4056-D007

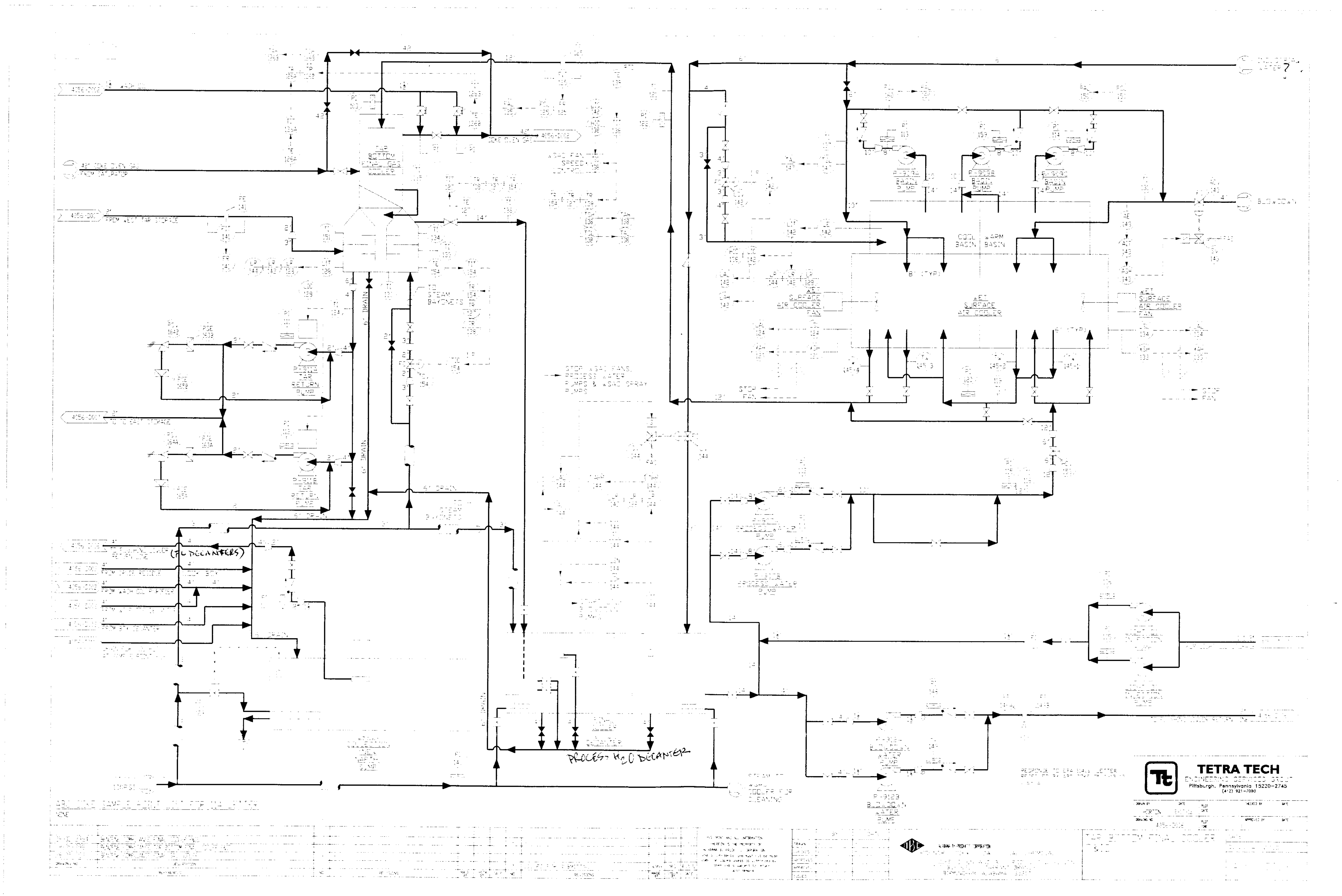

6" DRAIN
STEAM BAYONETS
COOL BASIN
WARM BASIN
WET SURFACE AIR COOLER
WET SURFACE AIR COOLER FAN
8" (TYP)
STOP FAN
BLOWDOWN
(TO DECANTERS)
PROCESS H2O DECANTER
TETRA TECH
ENGINEERING SERVICES GROUP
Pittsburgh, Pennsylvania 15220-2745
(412) 921-7090

4056-D009

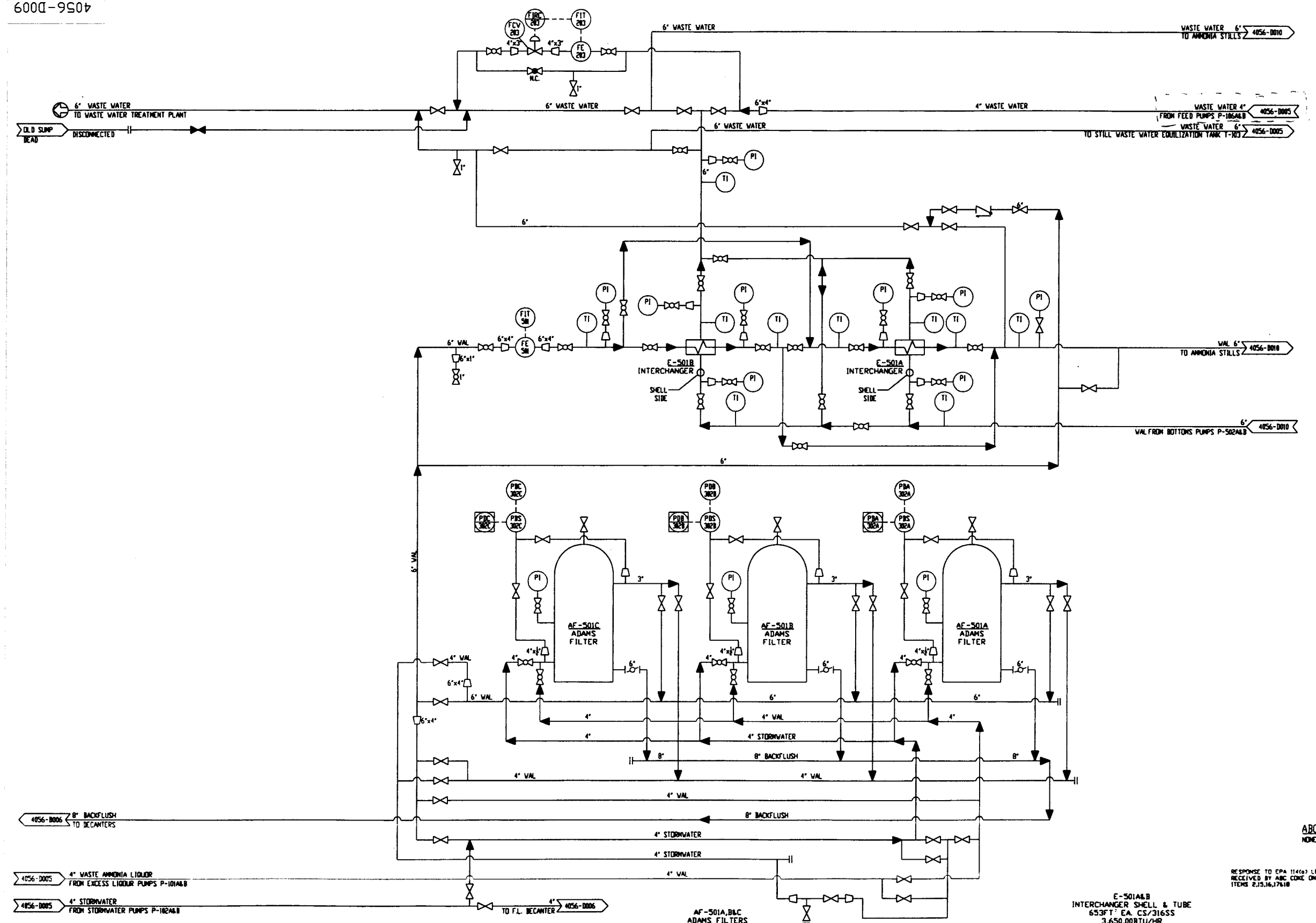

ABC COKE SAMPLE POINT LIST FOR 114 LETTER
NONE

RESPONSE TO EPA 114(a) LETTER
RECEIVED BY ABC COKE ON 1-19-12
ITEMS 2,15,16,17&18

E-501A&B
INTERCHANGER SHELL & TUBE
653FT² EA. CS/316SS
3,650,000BTU/HR
TOTAL

DRAWING NO.	DESCRIPTION	NO.	REVISIONS	MADE BY	CHECK BY	DATE	NO.	REVISIONS	MADE BY	CHECK BY	DATE
-	-	-	-	-	-	-	-	-	-	-	-
-	-	-	-	-	-	-	-	-	-	-	-
-	-	-	-	-	-	-	-	-	-	-	-
5178-007-M02	AMMONIA STILL ADDITION, P&ID	-	-	-	-	-	-	-	-	-	-
	REFERENCES	-	-	-	-	-	0	ISSUED FOR SUBMITTAL	KHH	MS	4/25/92

THIS PRINT AND ALL INFORMATION THEREON IS THE PROPERTY OF ALABAMA BY-PRODUCTS CORPORATION and is confidential and must not be made public or copied unless so authorized by them and is subject to return upon demand

	BY	DATE
DRAWN	RBA	1-13-92
CHECKED	JI	4-24-92
APPROVED		
APPROVED		
ISSUED		

ALABAMA BY-PRODUCTS CORPORATION
FOUNDRY COKE • COAL • COAL CHEMICALS
COKE OVEN AND BY-PRODUCTS DIVISION
P.O. BOX 6587 - TARRANT BRANCH
BIRMINGHAM, ALABAMA 35217

TETRA TECH
ENGINEERING SERVICES GROUP
Pittsburgh, Pennsylvania 15220-2745
(412) 921-7000

DRAWN BY	DATE	PLANT MGR.	CHECKED BY	DATE
HORTON	3-16-12		-	-
DRAWING NO.		PLANT MGR.	APPROVED BY	DATE
4056-D009			-	-

AMMONIA STILL SHT 1 OF 2
P&ID

DATE: -
SCALE NONE

4056-D009

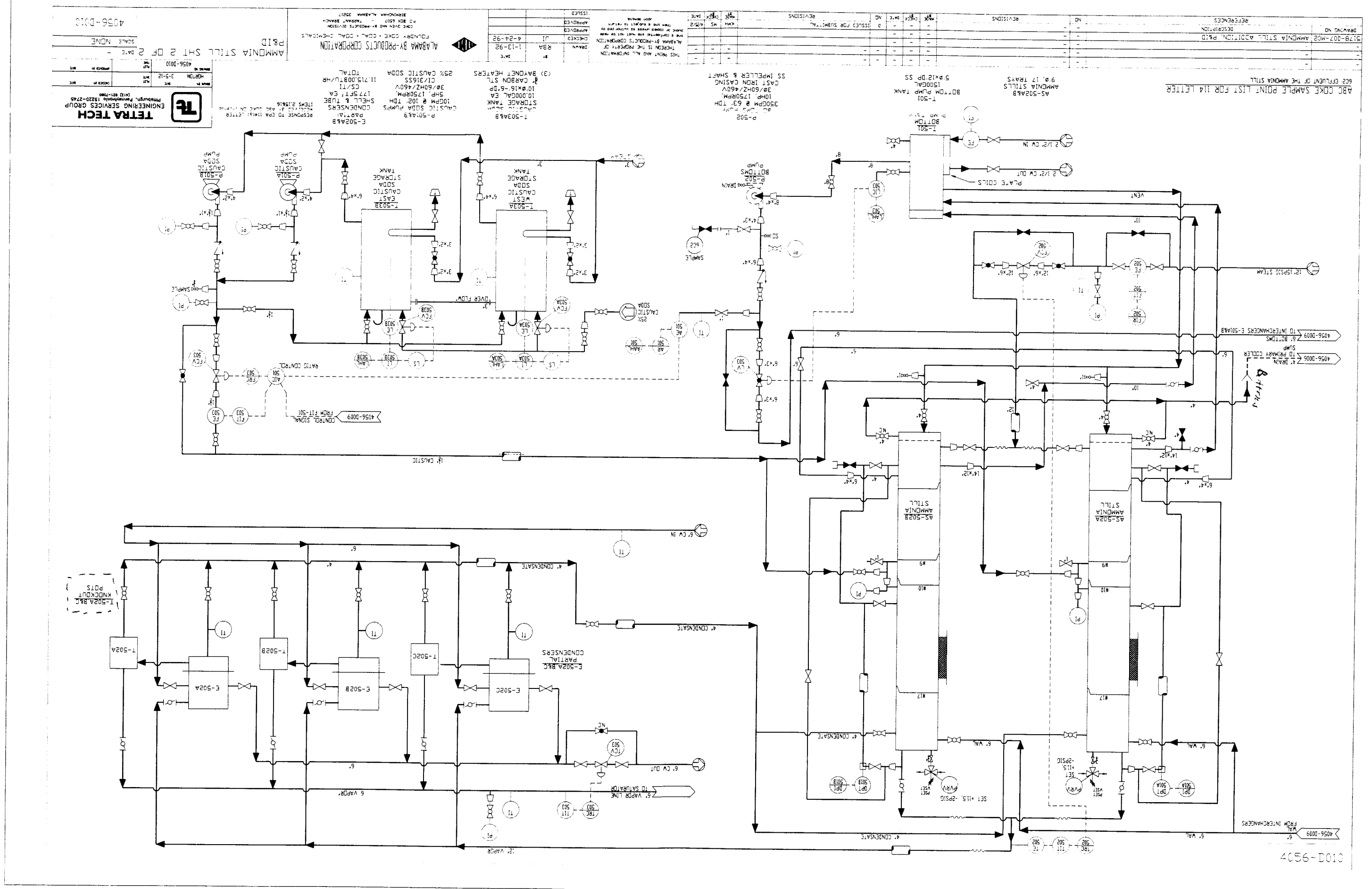
ABC COKE SAMPLE POINT LIST FOR 114 LETTER
BOC EFFLUENT OF THE AMMONIA STILL
AS-502A&B AMMONIA STILLS 9'ø, 17 TRAYS
T-501 BOTTOM PUMP TANK 5'x12'DP SS
BOTTOM PUMP 1500GAL
PLATE COILS
2 1/2" CW OUT
2 1/2" CW IN
VENT
12" 15PSIG STEAM
TO INTERCHANGERS E-502A&B
4056-D009
6" BOTTOMS
4" DRAIN TO PRIMARY COOLER
SUMP
AS-502A AMMONIA STILL
AS-502B AMMONIA STILL
SET +115 -2PSIG
6" VAL
FROM INTERCHANGERS
4" CONDENSATE
6" CW IN
6" CW OUT
6" VAPOR LINE TO SATURATOR
6" VAPOR
12" VAPOR
E-502A,B&C PARTIAL CONDENSERS
T-502A,B&C KNOCKOUT POTS
T-502A
T-502B
T-502C
E-502A
E-502B
E-502C
CONTROL SIGNAL FROM FIT-501
9AIID CONTROL
12" CAUSTIC
25% CAUSTIC SODA
T-502A WEST CAUSTIC SODA STORAGE TANK
T-502B EAST CAUSTIC SODA STORAGE TANK
OVER FLOW
P-502A CAUSTIC SODA PUMP
P-502B CAUSTIC SODA PUMP
SAMPLE
P-502 BOTTOMS PUMP
P-501A&B CAUSTIC SODA PUMP
E-502A&B PARTIAL CONDENSERS
SHELL & TUBE
177.5FT² EA
11,715,008TU/HR
TOTAL
25% CAUSTIC SODA
CT/316SS
30/60HZ/460V
5HP, 1750RPM,
10CPM @ 102' TDH
CAUSTIC SODA PUMPS
P-501A&B
CARBON STL
10'0x16'-6"DP
10,000GAL EA
STORAGE TANK
CARBON STEEL
(3) BAYONET HEATERS
SS IMPELLER & SHAFT
CAST IRON CASING
30/60HZ/460V
350GPM @ 63' TDH
P-502
TERMS AND CONDITIONS
ALABAMA BY-PRODUCTS CORPORATION
AMMONIA STILL SHT 2 OF 2
P&ID
4056-D010
TERRA TECH
ENGINEERING SERVICES GROUP
Pittsburgh, Pennsylvania 15220-2745
(412) 921-7090
4056-D010
SCALE NONE
DATE -
ALABAMA BY-PRODUCTS CORPORATION
FLOWSHEET CODE - COAL - COAL CHEMICALS
P.O. BOX 6507 - TARRANT BRANCH
BIRMINGHAM, ALABAMA 35217
CHECKED J1 4-24-92
DRAWN RBA 1-13-92
4056-D010

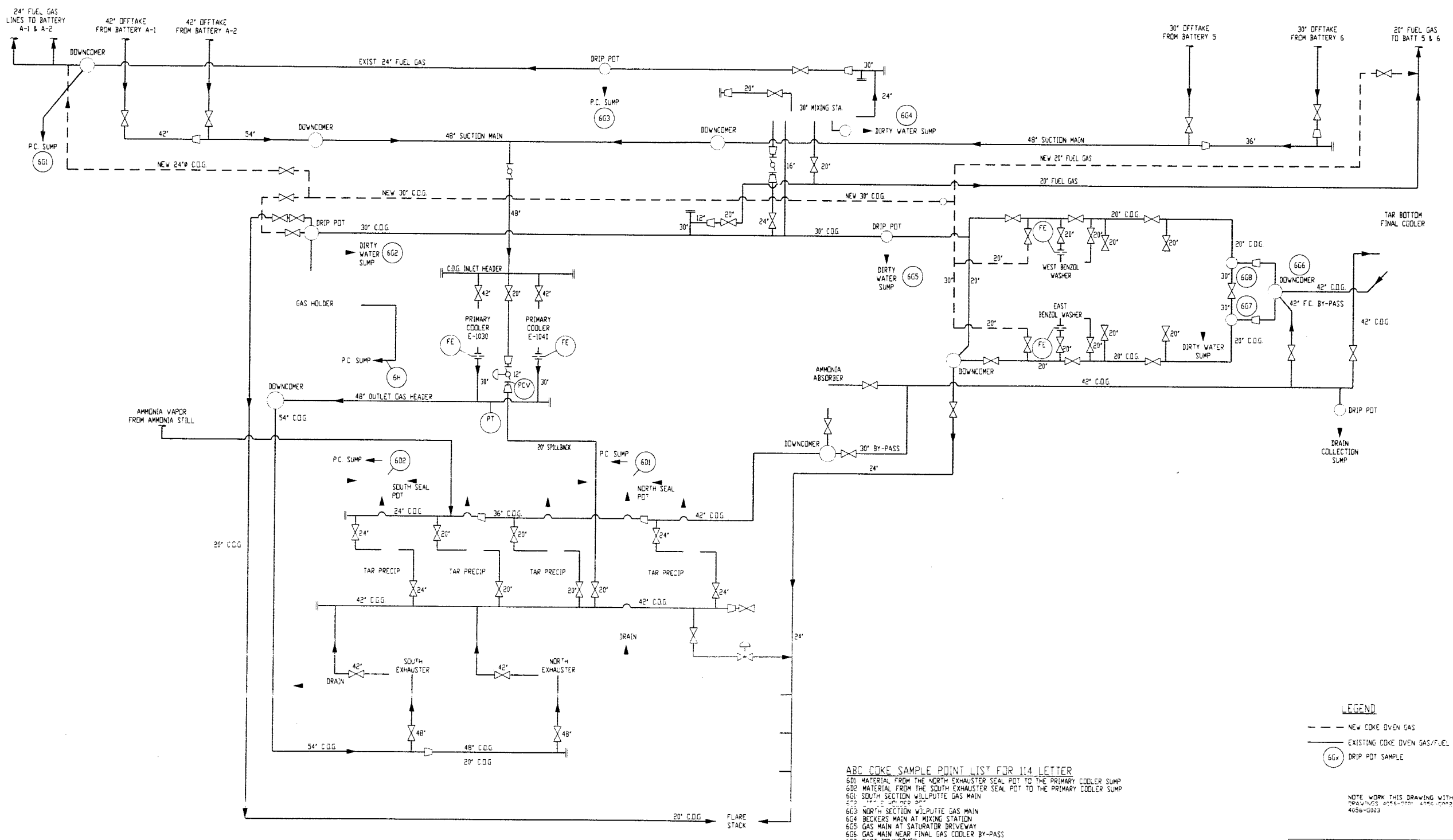

LEGEND

- — — NEW COKE OVEN GAS
- ——— EXISTING COKE OVEN GAS/FUEL GAS
- (6Gx) DRIP POT SAMPLE

NOTE: WORK THIS DRAWING WITH DRAWINGS 4056-D001, 4056-D002 & 4056-G003

ABC COKE SAMPLE POINT LIST FOR 114 LETTER

6D1 MATERIAL FROM THE NORTH EXHAUSTER SEAL POT TO THE PRIMARY COOLER SUMP
6D2 MATERIAL FROM THE SOUTH EXHAUSTER SEAL POT TO THE PRIMARY COOLER SUMP
6G1 SOUTH SECTION WILLPUTTE GAS MAIN
6G2 [illegible]
6G3 NORTH SECTION WILPUTTE GAS MAIN
6G4 BECKERS MAIN AT MIXING STATION
6G5 GAS MAIN AT SATURATOR DRIVEWAY
6G6 GAS MAIN NEAR FINAL GAS COOLER BY-PASS
6G7 EAST DOWNCOMER
6G8 WEST DOWNCOMER
6H WATER FROM WATER SEAL ON THE GAS HOLDER

RESPONSE TO EPA 114(a) LETTER [illegible] ITEM 2(a).6

TETRA TECH
ENGINEERING SERVICES GROUP
Pittsburgh, Pennsylvania 15220-2745
(412) 921-7080

DRAWN BY	DATE	PLOT DATE	CHECKED BY	DATE
WRW	3-6-12			
DRAWING NO. 4056-D011		PLOT TIME	APPROVED BY	DATE

DRAWING NO	DESCRIPTION	NO.	REVISIONS	MADE BY	CHECK BY	DATE	NO.	REVISIONS	MADE BY	CHECK BY	DATE
723-3200-0102	GAS HANDLING FLOW DIAGRAM						0	ISSUED FOR SUBMITTAL	KMH	MS	4/25/12

REFERENCES

THIS PRINT AND ALL INFORMATION THEREON IS THE PROPERTY OF ALABAMA BY-PRODUCTS CORPORATION and is confidential and must not be made public or copied unless so authorized by them and is subject to return upon demand.

	BY	DATE
DRAWN	WRW	02/28/12
CHECKED	-	-
APPROVED	-	-
APPROVED	-	-
ISSUED	-	-

ALABAMA BY-PRODUCTS CORPORATION
FOUNDRY COKE • COAL • COAL CHEMICALS
COKE OVEN AND BY-PRODUCTS DIVISION
PO BOX 6507 - TARRANT BRANCH
BIRMINGHAM, ALABAMA 35217

COKE BYPRODUCT PLANT
PLANT COG DISTRIBUTION
P&ID

DATE 02/28/18
SCALE SCALE 3/32"=1'-0"

4056-D011

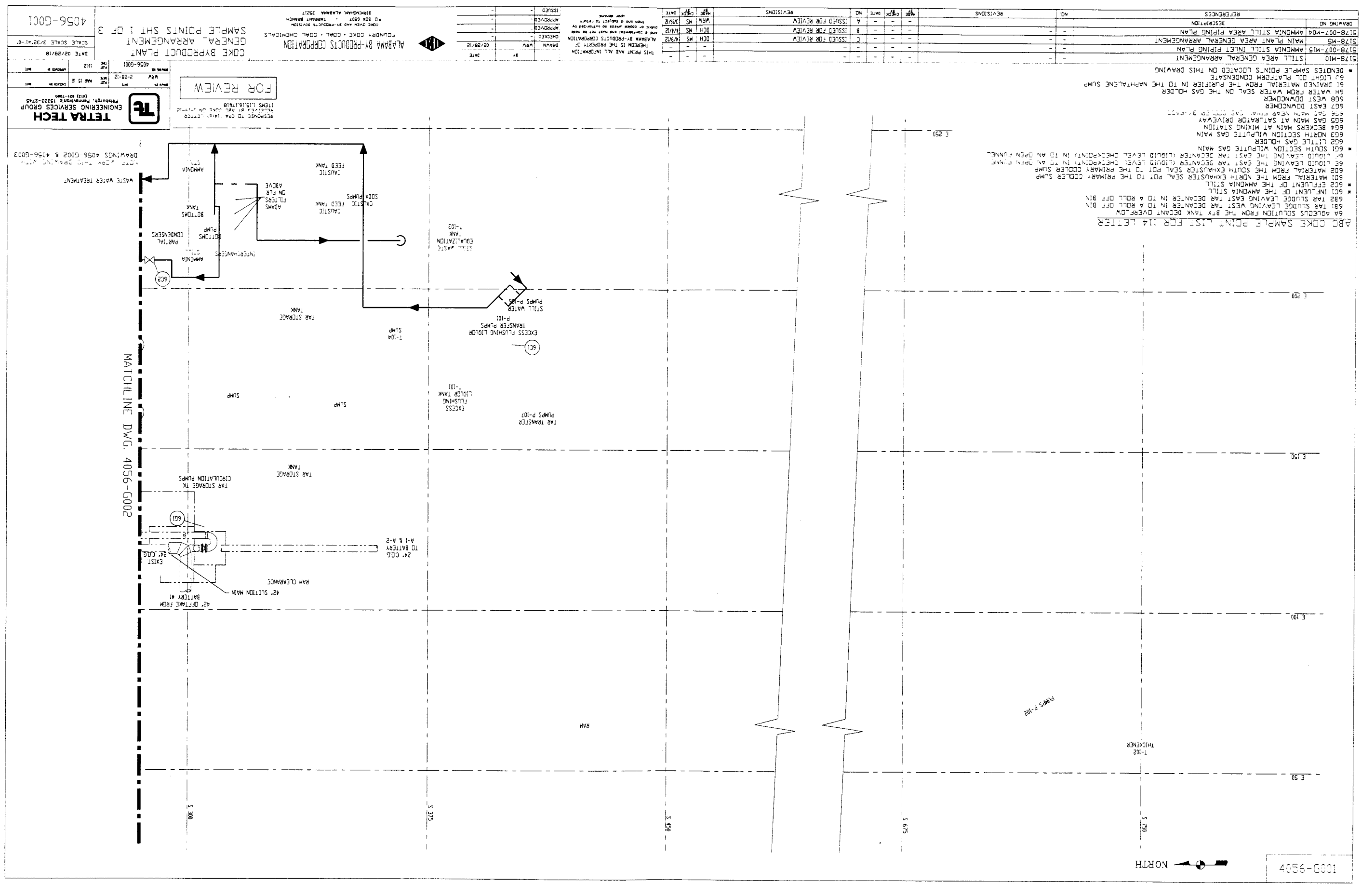

4056-G001
COKE BYPRODUCT PLANT
GENERAL ARRANGEMENT
SAMPLE POINTS SHT 1 OF 3
ALABAMA BY-PRODUCTS CORPORATION
FOUNDRY COKE · COAL · COAL CHEMICALS
TETRA TECH
ENGINEERING SERVICES GROUP
FOR REVIEW
MATCHLINE DWG. 4056-G002
NORTH

4056-G002

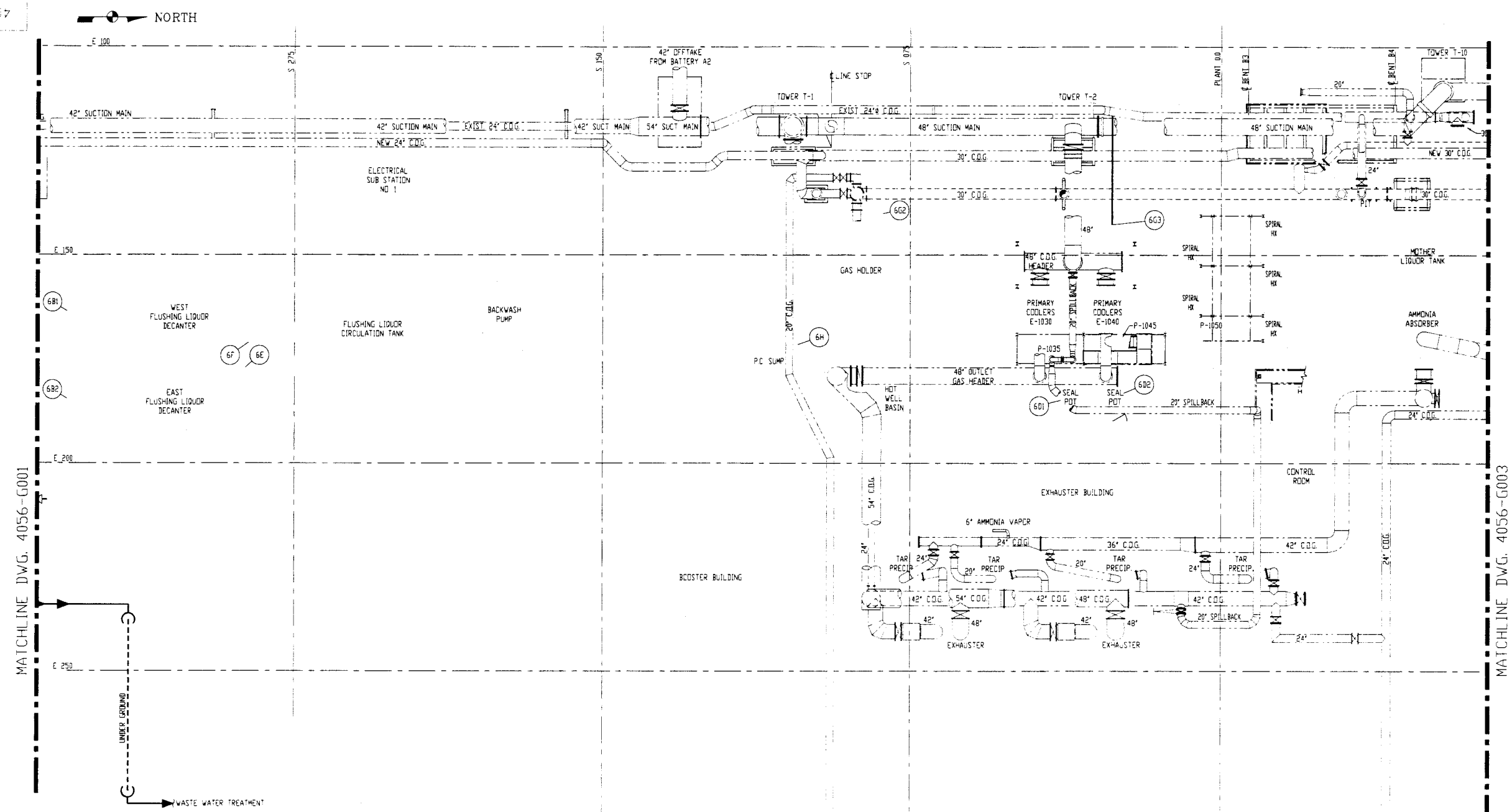

LOCATION PLAN
SCALE 3/32"=1'-0"

ABC COKE SAMPLE POINT LIST FOR 114 LETTER

6A AQUEOUS SOLUTION FROM THE BTX TANK DECANT OVERFLOW
* 6B1 TAR SLUDGE LEAVING WEST TAR DECANTER IN TO A ROLL OFF BIN
* 6B2 TAR SLUDGE LEAVING EAST TAR DECANTER IN TO A ROLL OFF BIN
6C1 INFLUENT OF THE AMMONIA STILL
6C2 EFFLUENT OF THE AMMONIA STILL
* 6D1 MATERIAL FROM THE NORTH EXHAUSTER SEAL POT TO THE PRIMARY COOLER SUMP
* 6D2 MATERIAL FROM THE SOUTH EXHAUSTER SEAL POT TO THE PRIMARY COOLER SUMP
* 6E LIQUID LEAVING THE EAST TAR DECANTER (LIQUID LEVEL CHECKPOINT) IN TO AN OPEN FUNNEL
* 6F LIQUID LEAVING THE EAST TAR DECANTER (LIQUID LEVEL CHECKPOINT) IN TO AN OPEN FUNNEL
6G1 SOUTH SECTION WILPUTTE GAS MAIN
* 6G2 LITTLE GAS HOLDER
* 6G3 NORTH SECTION WILPUTTE GAS MAIN
6G4 BECKERS MAIN AT MIXING STATION
6G5 GAS MAIN AT SATURATOR DRIVEWAY
6G6 GAS MAIN NEAR FINAL GAS COOLER BY-PASS
6G7 EAST DOWNCOMER
6G8 WEST DOWNCOMER
* 6H WATER FROM WATER SEAL ON THE GAS HOLDER
6I DRAINED MATERIAL FROM THE PURIFIER IN TO THE [illegible] SUMP
6J LIGHT OIL PLATFORM CONDENSATE
* DENOTES SAMPLE POINTS LOCATED ON THIS DRAWING

NOTE WORK THIS DRAWING WITH DRAWINGS 4056-G001 & 4056-G003

RECEIVED BY ABC COKE ON 1-19-12
ITEM 1

FOR REVIEW

DRAWING NO	DESCRIPTION
2126-P001	AMMONIA ABSORBER GAS PIPING REPLACEMENT
28-01-2990	BENZENE COMPLIANCE TAR SYSTEM PIPING PLAN
723-3100-0052	F.L. AND TAR EQUIPMENT ARRANGEMENT
723-3240-0134	WATER AND TAR DRAIN PIPING, EXHAUSTER BLDG
1914-P001	GAS PIPING REPLACEMENT FROM BENZOL WASHERS TO GAS HOLDER
723-3240-0129	GAS PIPING AT EXHAUSTERS AND PRECIPITATORS
6461-G001	PRIMARY COOLER GENERAL ARRANGEMENT

REFERENCES

NO.	REVISIONS	MADE BY	CHECK BY	DATE
-	-	-	-	-
-	-	-	-	-
-	-	-	-	-
-	-	-	-	-
-	-	-	-	-
-	-	-	-	-

NO.	REVISIONS	MADE BY	CHECK BY	DATE
C	ISSUED FOR REVIEW	DCH	MS	4/9/12
B	ISSUED FOR REVIEW	DCH	MS	4/4/12
A	ISSUED FOR REVIEW	WRV	MS	3/16/12

THIS PRINT AND ALL INFORMATION THEREON IS THE PROPERTY OF ALABAMA BY-PRODUCTS CORPORATION and is confidential and must not be made public or copied unless so authorized by them and is subject to return upon demand.

	BY	DATE
DRAWN	WRV	02/28/12
CHECKED	-	-
APPROVED	-	-
APPROVED	-	-
ISSUED	-	-

ALABAMA BY-PRODUCTS CORPORATION
FOUNDRY COKE • COAL • COAL CHEMICALS
COKE OVEN AND BY-PRODUCTS DIVISION
P.O. BOX 6507 - TARRANT BRANCH
BIRMINGHAM, ALABAMA 35217

COKE BYPRODUCT PLANT
GENERAL ARRANGEMENT
SAMPLE POINTS SHT 2 OF 3

DATE 02/28/10
SCALE SCALE 3/32"=1'-0"

4056-G002

TETRA TECH
ENGINEERING SERVICES GROUP
Pittsburgh, Pennsylvania 15220-2745
(412) 921-7090

DRAWN BY	DATE	PLOT DATE	MAR 15 12	CHECKED BY	DATE
WRV	2-28-12				
DRAWING NO 4056-G002		PLOT TIME	1142	APPROVED BY	DATE

4056-G003

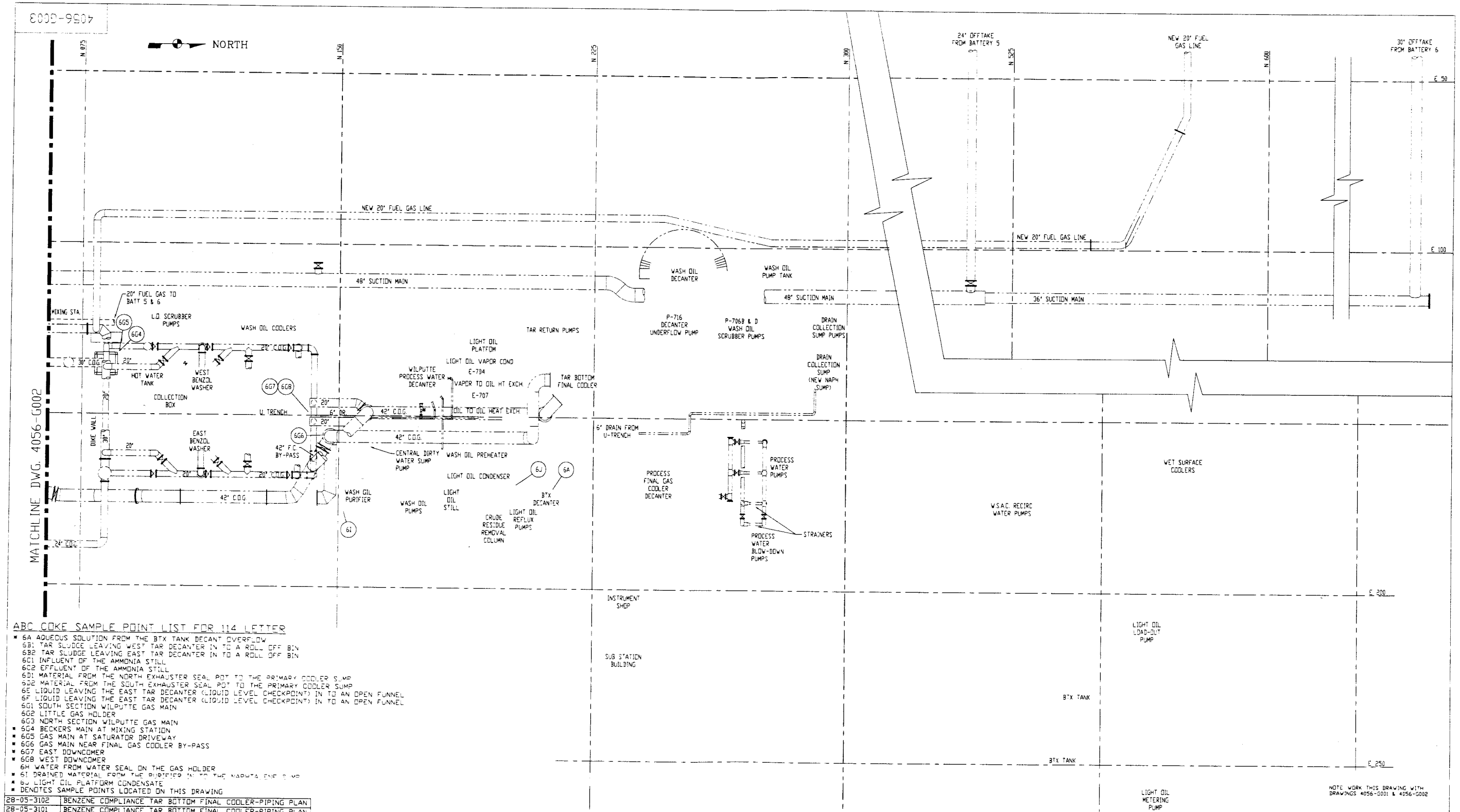

ABC COKE SAMPLE POINT LIST FOR 114 LETTER

- * 6A AQUEOUS SOLUTION FROM THE BTX TANK DECANT OVERFLOW
- 6B1 TAR SLUDGE LEAVING WEST TAR DECANTER IN TO A ROLL OFF BIN
- 6B2 TAR SLUDGE LEAVING EAST TAR DECANTER IN TO A ROLL OFF BIN
- 6C1 INFLUENT OF THE AMMONIA STILL
- 6C2 EFFLUENT OF THE AMMONIA STILL
- 6D1 MATERIAL FROM THE NORTH EXHAUSTER SEAL POT TO THE PRIMARY COOLER SUMP
- 6D2 MATERIAL FROM THE SOUTH EXHAUSTER SEAL POT TO THE PRIMARY COOLER SUMP
- 6E LIQUID LEAVING THE EAST TAR DECANTER (LIQUID LEVEL CHECKPOINT) IN TO AN OPEN FUNNEL
- 6F LIQUID LEAVING THE EAST TAR DECANTER (LIQUID LEVEL CHECKPOINT) IN TO AN OPEN FUNNEL
- 6G1 SOUTH SECTION WILPUTTE GAS MAIN
- 6G2 LITTLE GAS HOLDER
- 6G3 NORTH SECTION WILPUTTE GAS MAIN
- * 6G4 BECKERS MAIN AT MIXING STATION
- * 6G5 GAS MAIN AT SATURATOR DRIVEWAY
- * 6G6 GAS MAIN NEAR FINAL GAS COOLER BY-PASS
- * 6G7 EAST DOWNCOMER
- * 6G8 WEST DOWNCOMER
- 6H WATER FROM WATER SEAL ON THE GAS HOLDER
- * 6I DRAINED MATERIAL FROM THE PURIFIER IN TO THE NAPHTA FNE S MP
- * 6J LIGHT OIL PLATFORM CONDENSATE
- * DENOTES SAMPLE POINTS LOCATED ON THIS DRAWING

28-05-3102	BENZENE COMPLIANCE TAR BOTTOM FINAL COOLER-PIPING PLAN
28-05-3101	BENZENE COMPLIANCE TAR BOTTOM FINAL COOLER-PIPING PLAN
28-05-2879	BENZENE COMPLIANCE TAR BOTTOM FINAL COOLER SYSTEM
2707-708-70005	L.O. DECANTER AT P-5 MP TANK
2707-708-70004	WASH OIL PURIFIER-WASH OIL PIPING
2707-708-70003	EAST SCRUBBER VESSEL-WASH OIL PIPING
2707-708-70001	WEST SCRUBBER VESSEL-WASH OIL PIPING
2481-P001-0	FINAL COOLER BYPASS
1914-P002	GAS PIPING REPLACEMENT FROM BENZOL WASHERS TO GAS HOLDER
723-3640-0268	PROCESS WATER DECANTER PIPING
723-3240-0131	GAS MIXING STATION
723-3600-0238	L.O RECOVERY PLANT
723-3640-0266	L.O RECOVERY UNIT

DRAWING NO.	DESCRIPTION
REFERENCES	

NO	REVISIONS	MADE BY	CHECK BY	DATE
-	-	-	-	-
-	-	-	-	-
-	-	-	-	-
C	ISSUED FOR REVIEW	DCH	MS	4/9/12
B	ISSUED FOR REVIEW	DCH	MS	4/4/12
A	ISSUED FOR REVIEW	WRW	MS	3/16/12

NO	REVISIONS	MADE BY	CHECK BY	DATE
-	-	-	-	-
-	-	-	-	-
-	-	-	-	-

THIS PRINT AND ALL INFORMATION THEREON IS THE PROPERTY OF ALABAMA BY-PRODUCTS CORPORATION and is confidential and must not be made public or copied unless so authorized by them and is subject to return upon demand.

	BY	DATE
DRAWN	WRW	02/28/12
CHECKED	-	-
APPROVED	-	-
APPROVED	-	-
ISSUED	-	-

ALABAMA BY-PRODUCTS CORPORATION
FOUNDRY COKE • COAL • COAL CHEMICALS
COKE OVEN AND BY-PRODUCTS DIVISION
P.O. BOX 6507 - TARRANT BRANCH
BIRMINGHAM, ALABAMA 35217

COKE BYPRODUCT PLANT
GENERAL ARRANGEMENT
SAMPLE POINTS SHT 3 OF 3

DATE 02/28/18
SCALE SCALE 3/32"=1'-0"

4056-G003

NOTE WORK THIS DRAWING WITH DRAWINGS 4056-G001 & 4056-G002

RESPONSE TO EPA 114(a) LETTER
RECEIVED BY PHONE DATE 04/13/12
ITEM 1

FOR REVIEW

TETRA TECH
ENGINEERING SERVICES GROUP
Pittsburgh, Pennsylvania 15220-2745
(412) 921-7090

DRAWN BY	DATE	PLOT DATE	MAR 15 12	CHECKED BY	DATE
WRW	2-28-12				
DRAWING NO. 4056-G003		PLOT TIME 1112		APPROVED BY	DATE

UNIT_CODE	ACCESS_DESC	EQUITYPE_DESC	CONFIG_DESC	SERVICE_DESC	CLOSED_VENT_SYSTEM	GROUP_DESC	RULE_DESC	INSPCYC_DESC	PASS_INSPECT_UNTIL_SKIP	SKIP_INSPCYC_DESC	LEAK_LIMIT	FST_AT_BY	REP_BY	AVOCYCLE_DESC
COKE	Accessible	Connector	Sampling Connection	Light Liquid	FALSE	40 CFR 61 Subpart V	Working NA1 NESHPV3	Exempt						
COKE	Accessible	Connector	Standard Service	Gas	FALSE	40 CFR 61 Subpart L	Working ALHVCSTMCD JFFSNCNTY NA1 NSHPL1	Exempt			10000	5	15	Exempt
COKE	Accessible	Connector	Standard Service	Gas	FALSE	40 CFR 61 Subpart L	Working ALHVCSTMCD JFFSNCNTY NA1 NSHPL1	Exempt			500	5	15	Exempt
COKE	Accessible	Connector	Standard Service	Light Liquid	FALSE	40 CFR 61 Subpart L	Working ALHVCSTMCD JFFSNCNTY NA1 NSHPL1	Exempt			10000	5	15	Exempt
COKE	Accessible	Connector	Standard Service	Light Liquid	FALSE	40 CFR 61 Subpart L	Working ALHVCSTMCD JFFSNCNTY NA1 NSHPL1	Exempt			500	5	15	Exempt
COKE	Accessible	Connector	Standard Service	Light Liquid	FALSE	40 CFR 61 Subpart V	Working NA1 NESHPV3	Exempt			10000	5	15	Exempt
COKE	Accessible	Flange	Standard Service	Gas	FALSE	40 CFR 61 Subpart L	Working ALHVCSTMCD JFFSNCNTY NA1 NSHPL1	Exempt			10000	5	15	Exempt
COKE	Accessible	Flange	Standard Service	Gas	FALSE	40 CFR 61 Subpart L	Working ALHVCSTMCD JFFSNCNTY NA1 NSHPL1	Exempt			500	5	15	Exempt
COKE	Accessible	Flange	Standard Service	Light Liquid	FALSE	40 CFR 61 Subpart L	Working ALHVCSTMCD JFFSNCNTY NA1 NSHPL1	Exempt			10000	5	15	Exempt
COKE	Accessible	Flange	Standard Service	Light Liquid	FALSE	40 CFR 61 Subpart L	Working ALHVCSTMCD JFFSNCNTY NA1 NSHPL1	Exempt			500	5	15	Exempt
COKE	Accessible	Flange	Standard Service	Light Liquid	FALSE	40 CFR 61 Subpart V	Working NA1 NESHPV3	Exempt			10000	5	15	Exempt
COKE	Accessible	Flange	Standard Service	Vacuum Service	FALSE	40 CFR 61 Subpart L	Working ALHVCSTMCD JFFSNCNTY NA1 NSHPL1	Exempt			500	5	15	Exempt
COKE	Accessible	Flange	Standard Service	Vacuum Service	FALSE	40 CFR 61 Subpart L	Working ALHVCSTMCD JFFSNCNTY NA1 NSHPL1	Exempt			10000	5	15	Exempt
COKE	Accessible	Flange	Standard Service	Vapor	FALSE	40 CFR 61 Subpart V	Working NA1 NESHPV3	Exempt			10000	5	15	Exempt
COKE	Accessible	Pressure Relief Valve	Standard Service	Light Liquid	FALSE	40 CFR 61 Subpart V	Working NA1 NESHPV3	Exempt			500	5	15	Exempt
COKE	Accessible	Pump	Standard Service	Light Liquid	FALSE	40 CFR 61 Subpart L	Working ALHVCSTMCD JFFSNCNTY NA1 NSHPL1	Monthly			500	5	15	Weekly
COKE	Accessible	Pump	Standard Service	Light Liquid	FALSE	40 CFR 61 Subpart L	Working ALHVCSTMCD JFFSNCNTY NA1 NSHPL1	Monthly			10000	5	15	Weekly
COKE	Accessible	Pump	Standard Service	Light Liquid	FALSE	40 CFR 61 Subpart V	Working NA1 NESHPV3	Monthly			10000	5	15	Weekly
COKE	Accessible	Valve	Closed Vent Bypass	Light Liquid	FALSE	40 CFR 61 Subpart L	Working ALHVCSTMCD JFFSNCNTY NA1 NSHPL1	Monthly	2	Quarterly	500	5	15	Exempt
COKE	Accessible	Valve	Closed Vent Bypass	Light Liquid	FALSE	40 CFR 61 Subpart L	Working ALHVCSTMCD JFFSNCNTY NA1 NSHPL1	Monthly	2	Quarterly	10000	5	15	Exempt
COKE	Accessible	Valve	Externally Actuated	Gas	FALSE	40 CFR 61 Subpart L	Working ALHVCSTMCD JFFSNCNTY NA1 NSHPL1	Monthly	2	Quarterly	500	5	15	Exempt
COKE	Accessible	Valve	Externally Actuated	Gas	FALSE	40 CFR 61 Subpart L	Working ALHVCSTMCD JFFSNCNTY NA1 NSHPL1	Monthly	2	Quarterly	10000	5	15	Exempt
COKE	Accessible	Valve	Externally Actuated	Light Liquid	FALSE	40 CFR 61 Subpart L	Working ALHVCSTMCD JFFSNCNTY NA1 NSHPL1	Monthly	2	Quarterly	500	5	15	Exempt
COKE	Accessible	Valve	Externally Actuated	Light Liquid	FALSE	40 CFR 61 Subpart L	Working ALHVCSTMCD JFFSNCNTY NA1 NSHPL1	Monthly	2	Quarterly	10000	5	15	Exempt
COKE	Accessible	Valve	Externally Actuated	Light Liquid	FALSE	40 CFR 61 Subpart V	Working NA1 NESHPV3	Monthly	2	Quarterly	10000	5	15	Exempt
COKE	Accessible	Valve	Externally Actuated	Vacuum Service	FALSE	40 CFR 61 Subpart L	Working ALHVCSTMCD JFFSNCNTY NA1 NSHPL1	Exempt			500	5	15	Exempt
COKE	Accessible	Valve	Externally Actuated	Vacuum Service	FALSE	40 CFR 61 Subpart L	Working ALHVCSTMCD JFFSNCNTY NA1 NSHPL1	Exempt			10000	5	15	Exempt
COKE	Accessible	Valve	Externally Actuated	Vacuum Service	FALSE	40 CFR 61 Subpart L	Working ALHVCSTMCD JFFSNCNTY NA1 NSHPL1	Exempt			500	5	15	Exempt
COKE	Accessible	Valve	Externally Actuated	Vacuum Service	FALSE	40 CFR 61 Subpart L	Working ALHVCSTMCD JFFSNCNTY NA1 NSHPL1	Exempt			10000	5	15	Exempt
COKE	Difficult to Monitor	Flange	Standard Service	Light Liquid	FALSE	40 CFR 61 Subpart L	Working ALHVCSTMCD JFFSNCNTY NA1 NSHPL1	Exempt			500	5	15	Exempt
COKE	Difficult to Monitor	Flange	Standard Service	Light Liquid	FALSE	40 CFR 61 Subpart L	Working ALHVCSTMCD JFFSNCNTY NA1 NSHPL1	Exempt			10000	5	15	Exempt
COKE	Difficult to Monitor	Valve	Externally Actuated	Gas	FALSE	40 CFR 61 Subpart L	Working ALHVCSTMCD JFFSNCNTY NA1 NSHPL1	Difficult to Monitor - Annual			500	5	15	Exempt
COKE	Difficult to Monitor	Valve	Externally Actuated	Gas	FALSE	40 CFR 61 Subpart L	Working ALHVCSTMCD JFFSNCNTY NA1 NSHPL1	Difficult to Monitor - Annual			10000	5	15	Exempt
COKE	Difficult to Monitor	Valve	Externally Actuated	Light Liquid	FALSE	40 CFR 61 Subpart L	Working ALHVCSTMCD JFFSNCNTY NA1 NSHPL1	Difficult to Monitor - Annual			500	5	15	Exempt
COKE	Difficult to Monitor	Valve	Externally Actuated	Light Liquid	FALSE	40 CFR 61 Subpart L	Working ALHVCSTMCD JFFSNCNTY NA1 NSHPL1	Difficult to Monitor - Annual			10000	5	15	Exempt
COKE	Difficult to Monitor	Valve	Externally Actuated	Light Liquid	FALSE	40 CFR 61 Subpart V	Working NA1 NESHPV3	Difficult to Monitor - Annual			10000	5	15	Exempt
COKE	Unsafe to Monitor	Valve	Externally Actuated	Gas	FALSE	40 CFR 61 Subpart L	Working ALHVCSTMCD JFFSNCNTY NA1 NSHPL1	Exempt			500	5	15	Exempt
COKE	Unsafe to Monitor	Valve	Externally Actuated	Gas	FALSE	40 CFR 61 Subpart L	Working ALHVCSTMCD JFFSNCNTY NA1 NSHPL1	Exempt			10000	5	15	Exempt
COKE	Unsafe to Monitor	Valve	Externally Actuated	Light Liquid	FALSE	40 CFR 61 Subpart L	Working ALHVCSTMCD JFFSNCNTY NA1 NSHPL1	Exempt			500	5	15	Exempt
COKE	Unsafe to Monitor	Valve	Externally Actuated	Light Liquid	FALSE	40 CFR 61 Subpart L	Working ALHVCSTMCD JFFSNCNTY NA1 NSHPL1	Exempt			10000	5	15	Exempt
COKE	Unsafe to Monitor	Valve	Externally Actuated	Vacuum Service	FALSE	40 CFR 61 Subpart L	Working ALHVCSTMCD JFFSNCNTY NA1 NSHPL1	Exempt			500	5	15	Exempt
COKE	Unsafe to Monitor	Valve	Externally Actuated	Vacuum Service	FALSE	40 CFR 61 Subpart L	Working ALHVCSTMCD JFFSNCNTY NA1 NSHPL1	Exempt			10000	5	15	Exempt

UNIT_CODE	ACCESS_DESC	EQUITYPE_DESC	CONFIG_DESC	SERVICE_DESC	CLOSED_VENT_SYSTEM	GROUP_DESC	RULE_DESC	INSPCYC_DESC	PASS_INSPECT_UNTIL_SKIP	SKIP_INSPCYC_DESC	LEAK_LIMIT	FST_AT_BY	REP_BY	AVOCYCLE_DESC
COKE	Accessible	Connector	Sampling Connection	Light Liquid	FALSE	40 CFR 61 Subpart V	Working NA1 NESHPV3	Exempt			10000	5	15	Exempt
COKE	Accessible	Connector	Standard Service	Gas	FALSE	40 CFR 61 Subpart L	Working ALHVCSTMCD JFFSNCNTY NA1 NSHPL1	Exempt			500	5	15	Exempt
COKE	Accessible	Connector	Standard Service	Gas	FALSE	40 CFR 61 Subpart L	Working ALHVCSTMCD JFFSNCNTY NA1 NSHPL1	Exempt			10000	5	15	Exempt
COKE	Accessible	Connector	Standard Service	Light Liquid	FALSE	40 CFR 61 Subpart L	Working ALHVCSTMCD JFFSNCNTY NA1 NSHPL1	Exempt			500	5	15	Exempt
COKE	Accessible	Connector	Standard Service	Light Liquid	FALSE	40 CFR 61 Subpart L	Working ALHVCSTMCD JFFSNCNTY NA1 NSHPL1	Exempt			10000	5	15	Exempt
COKE	Accessible	Connector	Standard Service	Light Liquid	FALSE	40 CFR 61 Subpart V	Working NA1 NESHPV3	Exempt			10000	5	15	Exempt
COKE	Accessible	Flange	Standard Service	Gas	FALSE	40 CFR 61 Subpart L	Working ALHVCSTMCD JFFSNCNTY NA1 NSHPL1	Exempt			500	5	15	Exempt
COKE	Accessible	Flange	Standard Service	Gas	FALSE	40 CFR 61 Subpart L	Working ALHVCSTMCD JFFSNCNTY NA1 NSHPL1	Exempt			10000	5	15	Exempt
COKE	Accessible	Flange	Standard Service	Light Liquid	FALSE	40 CFR 61 Subpart L	Working ALHVCSTMCD JFFSNCNTY NA1 NSHPL1	Exempt			500	5	15	Exempt
COKE	Accessible	Flange	Standard Service	Light Liquid	FALSE	40 CFR 61 Subpart L	Working ALHVCSTMCD JFFSNCNTY NA1 NSHPL1	Exempt			10000	5	15	Exempt
COKE	Accessible	Flange	Standard Service	Light Liquid	FALSE	40 CFR 61 Subpart V	Working NA1 NESHPV3	Exempt			10000	5	15	Exempt
COKE	Accessible	Flange	Standard Service	Vacuum Service	FALSE	40 CFR 61 Subpart L	Working ALHVCSTMCD JFFSNCNTY NA1 NSHPL1	Exempt			500	5	15	Exempt
COKE	Accessible	Flange	Standard Service	Vacuum Service	FALSE	40 CFR 61 Subpart L	Working ALHVCSTMCD JFFSNCNTY NA1 NSHPL1	Exempt			10000	5	15	Exempt
COKE	Accessible	Flange	Standard Service	Vapor	FALSE	40 CFR 61 Subpart V	Working NA1 NESHPV3	Exempt			10000	5	15	Exempt
COKE	Accessible	Pressure Relief Valve	Standard Service	Light Liquid	FALSE	40 CFR 61 Subpart V	Working NA1 NESHPV3	Exempt			500	5	15	Exempt
COKE	Accessible	Pump	Standard Service	Light Liquid	FALSE	40 CFR 61 Subpart L	Working ALHVCSTMCD JFFSNCNTY NA1 NSHPL1	Monthly			500	5	15	Weekly
COKE	Accessible	Pump	Standard Service	Light Liquid	FALSE	40 CFR 61 Subpart L	Working ALHVCSTMCD JFFSNCNTY NA1 NSHPL1	Monthly			10000	5	15	Weekly
COKE	Accessible	Pump	Standard Service	Light Liquid	FALSE	40 CFR 61 Subpart V	Working NA1 NESHPV3	Monthly			10000	5	15	Weekly
COKE	Accessible	Valve	Closed Vent Bypass	Light Liquid	FALSE	40 CFR 61 Subpart L	Working ALHVCSTMCD JFFSNCNTY NA1 NSHPL1	Monthly	2	Quarterly	500	5	15	Exempt
COKE	Accessible	Valve	Closed Vent Bypass	Light Liquid	FALSE	40 CFR 61 Subpart L	Working ALHVCSTMCD JFFSNCNTY NA1 NSHPL1	Monthly	2	Quarterly	10000	5	15	Exempt
COKE	Accessible	Valve	Externally Actuated	Gas	FALSE	40 CFR 61 Subpart L	Working ALHVCSTMCD JFFSNCNTY NA1 NSHPL1	Monthly	2	Quarterly	500	5	15	Exempt
COKE	Accessible	Valve	Externally Actuated	Gas	FALSE	40 CFR 61 Subpart L	Working ALHVCSTMCD JFFSNCNTY NA1 NSHPL1	Monthly	2	Quarterly	10000	5	15	Exempt
COKE	Accessible	Valve	Externally Actuated	Light Liquid	FALSE	40 CFR 61 Subpart L	Working ALHVCSTMCD JFFSNCNTY NA1 NSHPL1	Monthly	2	Quarterly	500	5	15	Exempt
COKE	Accessible	Valve	Externally Actuated	Light Liquid	FALSE	40 CFR 61 Subpart L	Working ALHVCSTMCD JFFSNCNTY NA1 NSHPL1	Monthly	2	Quarterly	10000	5	15	Exempt
COKE	Accessible	Valve	Externally Actuated	Light Liquid	FALSE	40 CFR 61 Subpart V	Working NA1 NESHPV3	Monthly	2	Quarterly	10000	5	15	Exempt
COKE	Accessible	Valve	Externally Actuated	Vacuum Service	FALSE	40 CFR 61 Subpart L	Working ALHVCSTMCD JFFSNCNTY NA1 NSHPL1	Exempt			500	5	15	Exempt
COKE	Accessible	Valve	Externally Actuated	Vacuum Service	FALSE	40 CFR 61 Subpart L	Working ALHVCSTMCD JFFSNCNTY NA1 NSHPL1	Exempt			10000	5	15	Exempt
COKE	Difficult to Monitor	Flange	Standard Service	Light Liquid	FALSE	40 CFR 61 Subpart L	Working ALHVCSTMCD JFFSNCNTY NA1 NSHPL1	Exempt			500	5	15	Exempt
COKE	Difficult to Monitor	Flange	Standard Service	Light Liquid	FALSE	40 CFR 61 Subpart L	Working ALHVCSTMCD JFFSNCNTY NA1 NSHPL1	Exempt			10000	5	15	Exempt
COKE	Difficult to Monitor	Valve	Externally Actuated	Gas	FALSE	40 CFR 61 Subpart L	Working ALHVCSTMCD JFFSNCNTY NA1 NSHPL1	Difficult to Monitor - Annual			500	5	15	Exempt
COKE	Difficult to Monitor	Valve	Externally Actuated	Gas	FALSE	40 CFR 61 Subpart L	Working ALHVCSTMCD JFFSNCNTY NA1 NSHPL1	Difficult to Monitor - Annual			10000	5	15	Exempt
COKE	Difficult to Monitor	Valve	Externally Actuated	Light Liquid	FALSE	40 CFR 61 Subpart L	Working ALHVCSTMCD JFFSNCNTY NA1 NSHPL1	Difficult to Monitor - Annual			500	5	15	Exempt
COKE	Difficult to Monitor	Valve	Externally Actuated	Light Liquid	FALSE	40 CFR 61 Subpart L	Working ALHVCSTMCD JFFSNCNTY NA1 NSHPL1	Difficult to Monitor - Annual			10000	5	15	Exempt
COKE	Difficult to Monitor	Valve	Externally Actuated	Light Liquid	FALSE	40 CFR 61 Subpart V	Working NA1 NESHPV3	Difficult to Monitor - Annual			10000	5	15	Exempt
COKE	Unsafe to Monitor	Valve	Externally Actuated	Gas	FALSE	40 CFR 61 Subpart L	Working ALHVCSTMCD JFFSNCNTY NA1 NSHPL1	Exempt			500	5	15	Exempt
COKE	Unsafe to Monitor	Valve	Externally Actuated	Gas	FALSE	40 CFR 61 Subpart L	Working ALHVCSTMCD JFFSNCNTY NA1 NSHPL1	Exempt			10000	5	15	Exempt
COKE	Unsafe to Monitor	Valve	Externally Actuated	Light Liquid	FALSE	40 CFR 61 Subpart L	Working ALHVCSTMCD JFFSNCNTY NA1 NSHPL1	Exempt			500	5	15	Exempt
COKE	Unsafe to Monitor	Valve	Externally Actuated	Light Liquid	FALSE	40 CFR 61 Subpart L	Working ALHVCSTMCD JFFSNCNTY NA1 NSHPL1	Exempt			10000	5	15	Exempt
COKE	Unsafe to Monitor	Valve	Externally Actuated	Vacuum Service	FALSE	40 CFR 61 Subpart L	Working ALHVCSTMCD JFFSNCNTY NA1 NSHPL1	Exempt			500	5	15	Exempt
COKE	Unsafe to Monitor	Valve	Externally Actuated	Vacuum Service	FALSE	40 CFR 61 Subpart L	Working ALHVCSTMCD JFFSNCNTY NA1 NSHPL1	Exempt			10000	5	15	Exempt

77

ENHANCED LDAR PROCEDURE

ABC COKE

A DIVISION OF
DRUMMOND COMPANY, INC.

900 HUNTSVILLE AVENUE
TARRANT, ALABAMA

PPM PROJECT NO. 40032402

JUNE 29, 2017

PPM
CONSULTANTS

ENHANCED LDAR PROGRAM

FOR

ABC COKE

A DIVISION OF
DRUMMOND COMPANY, INC.

900 HUNTSVILLE AVENUE
TARRANT, ALABAMA 35217

PPM PROJECT NO. 40032402

JUNE 29, 2017

PPM CONSULTANTS, INC.
5555 BANKHEAD HIGHWAY
BIRMINGHAM, ALABAMA 35210
(205) 836-5650

TABLE OF CONTENTS

PAGE

1.0 ENHANCED LDAR PROGRAM – COKE BY-PRODUCTS UNIT 1

1.1 General Information 1

1.1.1 Introduction 1

1.1.2 Applicable Regulations 1

1.2 Program Organization 1

1.3 Determination of Process Stream Applicability, Monitoring Frequency, and Repair Requirements 1

1.3.1 Process Stream Composition Determination 1

1.3.2 Identification of New Components 2

1.4 Equipment Identification and Categorization 3

1.4.1 Types of Components Subject to LDAR 3

1.5 Program Maintenance and QA/QC 4

2.0 PHOTO LOG UPDATE/P&ID MARKUP 5

2.1 Photo Log Update 5

2.2 P&ID Mark-Up 5

2.3 Review and Documentation 7

3.0 LDAR EQUIPMENT EXEMPTIONS 7

3.1 Light Liquid Pumps 7

3.2 Sampling Systems 7

4.0 FLAGGING, TAGGING AND DOCUMENTING 8

4.1 Flagging 9

4.2 Tagging 10

4.3 UTM Components 10

4.4 Pumps 10

4.5 Instrumentation Systems 11

5.0 LDAR FIELD MONITORING 11

5.1 Instrument Readiness 11

5.2 Monitoring Procedures 12

5.2.1 Valves 14

TABLE OF CONTENTS (continued)

PAGE

5.2.2 Flanges and Connectors 14
5.2.3 Pumps 15
5.2.4 Pressure Relief Devices 15

6.0 AVO INSPECTION 15

6.1 AVO Inspection Procedures 16

7.0 LEAK DEFINITION, DISCOVERY AND REPAIR 17

7.1 Leak Definition 17

7.2 Leak Discovery and Repair 18

7.3 Repair of Leaks 19

7.4 Delay of Repair 20

7.5 LDAR Tag Tracking 21

7.6 Delay of Repair Exceptions 21

7.7 LDAR Contact Information 23

8.0 REGULATORY RECORD KEEPING AND REPORTS GENERATION 23

8.1 Recordkeeping Procedures 23

8.1.1 Information Contained in the LDAR Database 23
8.1.2 Miscellaneous Records 24

8.2 Regulatory Reporting Requirements 24

8.2.1 Due Dates for Reporting Requirements 24

8.3 Required Content for Each Reporting Period 24

8.4 Certification Statement 25

9.0 LDAR EMPLOYEE TRAINING 26

9.1 Training Course Content 26

10.0 MANAGEMENT OF CHANGE 26

10.1 Change Requirements/Change Identification 27

10.2 Technical Change Documentation 27

10.3 Assignment of Responsibility 29

10.4 Temporary Technical Changes 29

TABLE OF CONTENTS (continued)

PAGE

10.5 Assurance 31

11.0 AUDITING 31

11.1 Purpose 31

11.2 Routine Audits 32

11.2.1 Monthly 32
11.2.2 Annually 33

11.3 Audit of LDAR Program 33

11.3.1 Internal ABC Coke Audit 33
11.3.2 Third-Party External Audit 33

12.0 MONITORING DTM AND UTM COMPONENTS 33

12.1 Difficult-to-Monitor Components (DTM) 33

12.2 Unsafe-to-Monitor Components (UTM) 34

12.3 Inaccessible Components 34

13.0 OPEN-ENDED LINE CONTROL 35

13.1 OEL Control 36

APPENDICES

Appendix A – LDAR Program Organization
Appendix B – Method 21
Appendix C – Tables
Appendix D – Weekly Pump AVO Inspection Form
Appendix E – LDAR Leak Repair Decision Tree
Appendix F – DOR Authorization Form
Appendix G – LDAR MOC Tracking Form
Appendix H – Audit Framework
Appendix I – OEL Tags

1.0 ENHANCED LDAR PROGRAM – COKE BY-PRODUCTS UNIT

1.1 GENERAL INFORMATION

1.1.1 Introduction

The ABC Coke Site is required by both local and federal regulations to follow a leak detection and repair (LDAR) program to reduce Volatile Organic Compounds (VOC) and Hazardous Air Pollutants (HAPs) emissions from equipment leaks. ABC Coke has had a Leak Detection Program in place since 2007. As part of ongoing improvements to operations, this Enhanced LDAR Program was developed; increasing the scope, intensity, and data management abilities, adding formal procedures for tracking changes, logging of data, and creation of an LDAR database. The Enhanced LDAR Program is limited to the By-Products Unit (By-Products) and provides a general description of all applicable LDAR requirements, LDAR organization and procedures.

1.1.2 Applicable Regulations

The facility operates under a Title V Permit and the LDAR Program is specifically related to Emission Unit 005 (Coke By-Products) which applies standards from 40 CFR Part 61, Subpart L, Subpart V; and JCDH Chapters 8.26 and 8.27.

1.2 PROGRAM ORGANIZATION

The program organization is comprised of ABC Coke site management team, a third party consultant and a third-party LDAR contractor team. ABC Coke, through its consultant, maintains a contract with a third party LDAR contractor to perform the monitoring of components pursuant to this LDAR Program. See **Appendix A** for the **LDAR Program Organization Chart**.

1.3 DETERMINATION OF PROCESS STREAM APPLICABILITY, MONITORING FREQUENCY, AND REPAIR REQUIREMENTS

1.3.1 Process Stream Composition Determination

Equipment subject to LDAR is divided into six categories for the purposes of defining monitoring frequency and leak definition for specific pieces of equipment. The six categories are benzene service, gas/vapor service, light liquid service, heavy liquid service, gas/vapor closed vent systems, and vacuum service.

1) Benzene service – equipment, other than an exhauster, that either contains or contacts a fluid (liquid or gas) that is at least 10% benzene by weight or any exhauster that either contains or contacts a fluid (liquid or gas) at least 1 percent benzene by weight.

2) Gas/vapor service – equipment that contains process fluid that is in the gaseous state at the operating conditions.

3) Light Liquid service – equipment that contains a liquid that meets the following conditions:
   a. The vapor pressure of one or more of the components is greater than 0.044 pounds per square inch (psi) at 20°C,
   b. The total concentration of the pure components having a vapor pressure greater than 0.044 psi at 20°C is equal to or greater than 20% by weight of the total process stream, and
   c. The fluid is a liquid at operating conditions.

4) Heavy Liquid service – equipment containing process fluid that is not in benzene service, gas/vapor service or light liquid service.

5) Gas/vapor closed vent system – a system not open to the atmosphere and composed of hard-piping, ductwork, connections and, if necessary, flow-inducing devices that transport gas or vapor from a piece or pieces of equipment to a control device or back into a process.

6) Vacuum service - equipment operating at an internal pressure which is at least 0.73 psi below ambient pressure.

1.3.2 Identification of New Components

ABC Coke has identified all valves, pumps, flanges/connectors, vessels, storage tanks, exhausters, final coolers, and cooling towers that are in either 10% in benzene service as defined in 40 CFR 61, Subpart L, 1% benzene service as defined by 40 CFR 61 Subpart L for exhausters or in light liquid service or gas vapor service per JCDH 8.26.

These components are included in the LDAR database, and will be updated as changes are made in the plant. The Management of Change (MOC) process will be used to track any change to the operation of the plant.

The LDAR Database (LEADERS) contains the most current copy of all components in VOC or HAP service.

1.4 EQUIPMENT IDENTIFICATION AND CATEGORIZATION

All equipment subject to LDAR is identified with a unique tag identification number in the LEADERS database. Also, nylon or stainless steel tags stamped with the identification number are placed in the field on all eligible equipment (valves, pumps, vessels, etc.). Some connectors and flanges may not have an attached tag in the field but will be identified in the database as being associated with nearby tagged equipment (e.g. valve).

1.4.1 Types of Components Subject to LDAR

Equipment subject to LDAR under Subpart L includes tar decanters, tar storage tanks, flushing-liquor circulation tanks, light-oil condensers, light-oil decanters, wash-oil decanters, wash-oil circulation tanks, naphthalene processing, final coolers, final-cooler cooling towers, and the following equipment that are intended to operate in benzene service: pumps, valves, exhausters, pressure relief devices, sampling connection systems, open-ended valves or lines, flanges or other connectors, and control devices or systems required by § 61.135.

Equipment subject to LDAR under the Subpart V program includes each pump, compressor, agitator, pressure relief device, sampling connection system, open-ended valve or line, valve, connector, surge control vessel, bottoms receiver, and instrumentation system in organic hazardous air pollutant service; and any control devices or systems in 10% or greater Volatile Organic Hazardous Air Pollutant (VOHAP) service.

Equipment in the JCDH 8.26 program includes the same equipment in Subpart V and for ABC Coke's LDAR program, the more stringent of the programs will be followed.

Also incorporated into this LDAR Program are agreed-to components not expressly covered by Subparts L or V or JCDH 8.26, yet were associated with benzene process streams.

1.5 PROGRAM MAINTENANCE AND QA/QC

The LDAR Contractor will perform equipment monitoring and tracking of leaks to maintain compliance with regulatory requirements. In addition to monitoring and tracking leaks, the contractor will perform other activities (see table below) necessary to ensure full compliance with the site's LDAR requirements. The LDAR Contractor will perform a Quality Assurance/Quality Control (QA/QC) check of the By-Products area during the scheduled monitoring which includes checking for missing tags, uncapped open-ended lines, and new components. The results of these checks will be communicated to the Third-Party LDAR Coordinator. QA/QC checks may also be done on an as-needed basis.

Numerous reports of LDAR activities will be generated for review (see list below). The purpose of many of these reports is to ensure defects (leaks, missing tags, etc.) observed during field inspections are communicated and acted upon. Additionally, these reports will be reviewed to make sure information contained is accurate (e.g. descriptions, designations, etc.). Because the information is maintained in the LDAR database, the reports will not be maintained in paper form.

Frequency	Name and Description
Daily (or during active monitoring)	Leak Report - Report of all leaks detected, repair attempts made, and whether or not repair attempt was successful.
	Maintenance Action Alert - Report of all leaks found which require Maintenance attention (i.e. repair outstanding).
	Calibration Report - Details precision calibration of monitoring equipment per Method 21.
	Monitoring Balance Report – run weekly
Monthly	Delay of Repair Report Summary
	Repaired Delay of Repair Report one per page
	Report listing total components monitored and total components due during the monitoring quarter (percent complete) to ensure appropriate scheduling of resources.

Additional reports may be run for emissions calculation purposes or to satisfy agency requests for a summary of monitoring. The QA/QC procedures above will ensure that this additional information is accurate.

2.0 PHOTO LOG UPDATE/P&ID MARKUP

This procedure addresses the requirements for updating the photo library and marking up P&IDs for equipment subject to LDAR.

2.1 PHOTO LOG UPDATE

The current color, number, and approximate location of each LDAR Tag are to be accurately depicted in the LDAR Photo Log and accompanying Tag Reference Table.

When a tag is added, removed, or changed for any reason, the master copy of the Photo Log and corresponding entry in the Tag Reference Table will be revised to reflect the change.

The Tag Reference Table consists of worksheets, which are tag color-specific, and should include the Tag ID for each LDAR tag, along with a brief description of the component, and the number of the photo in which it is depicted in the Photo Log.

Each revised Master Photo Log and Tag Reference Table will be saved to a protected network drive.

The Environmental Coordinator will notify the relevant department heads that a change has been made to the Log and Table and distribute any necessary page changes.

2.2 P&ID MARK-UP

Currently, ABC Coke has process-specific P&IDs and these will be compiled and adapted for the LDAR program. At such time that these adapted P&IDs are available, the following procedures will apply:

Highlight any equipment that is subject to LDAR requirements on the P&IDs. The highlighted drawings will be color-coded to identify components that are in the following services:

- Gas/Vapor (Yellow)
- Light Liquid (Pink)
- Heavy Liquid (Blue)

- Gas/Vapor Closed Vent Systems (Green)
- Vacuum (Orange).

Draw red lines perpendicular to the equipment on the P&IDs/Photo Library to indicate when a line is changing from one service to another or when a line is changing to/from HAP service.

Example: If a valve divides a line into Gas/Vapor and Light Liquid services, draw a red line through the valve.

Mark the P&IDs to identify two services in tank/container.

Example: If the component contains Light Liquid in the bottom of the tank and Gas/Vapor in the top of the tank, highlight the tank to separate the two services based on the normal operating level in the tank.

Out-of-Service components will not be considered as being subject to LDAR if it does not contain 10% VHAP and it is separated from other components subject to LDAR by two block valves or a blind.

If a line contains both Gas/Vapor and Light Liquid, the line should be highlighted as Gas/Vapor (example: outlet of a partial condenser). The Gas/Vapor components have the highest probability to leak.

Identify **Sampling Systems** subject to LDAR on the P&IDs/Photo Library by bracketing both ends of the system in red ink.
Assign HAP Product Codes as follows:

B – Benzene
X – Xylene
N – Naphthalene
T – Toluene
U – Unclassified

Note: The above is not a list of all HAPs. Use the Product Code that most closely matches the HAP in the equipment. Link to HAP's list on EPA's website: http://www.epa.gov/ttn/atw/orig189.html

Refer to LDAR Section 3.0 for Equipment Exemptions.

2.3 REVIEW AND DOCUMENTATION

The person who marks up the Photo Log/P&ID must be familiar with the process and LDAR requirements and date each marked-up Photo Log/P&ID after review. Each marked up Photo Log/P&ID should also be reviewed by the Environmental Coordinator.

Provide color copies of the updated P&ID/Photo Library to the Environmental Coordinator.

3.0 LDAR EQUIPMENT EXEMPTIONS

3.1 LIGHT LIQUID PUMPS

For a pump subject to LDAR to be considered exempt, the By-Products Supervisor must answer the questions in **Table 1, Appendix C,** to determine possible exemption, document the answers, and give the answers to the Third-Party LDAR Coordinator. The Third-Party LDAR Coordinator will use **Table 2** and **3** to verify the exemption information.

3.2 SAMPLING SYSTEMS

A Sampling Connection System is an assembly of equipment within a process unit used during periods of representative operation to take samples of the process fluid. Equipment used to take non-routine grab samples is not considered a sampling connection system. Each sampling connection system must be equipped with a closed-purge, closed-loop, or closed vent system (non-extractive samplers or in-line samplers are exempt from this requirements).

If the sampling system is covered by the LDAR Program, the By-Products Supervisor must answer the questions in **Table 4** to determine possible exemptions. The documented answers will be given to the Third-Party LDAR Coordinator who will use **Tables 5** and **6** to verify the exemption information.

4.0 FLAGGING, TAGGING AND DOCUMENTING

Flagging and tagging procedures will be used to identify equipment subject to LDAR. The applicable federal and local regulations require a list of identification numbers for equipment subject to LDAR. ABC Coke will identify the equipment subject to LDAR with stamped tags which have a unique identification number. The identification numbers will be listed in the LEADERS database. In most cases, each piece of equipment (except for connectors) subject to the LDAR program will have a unique identification distinguishing it from unaffected equipment. Connectors will be identified in the database with the identification number of the closest component subject to LDAR in the field.

To ensure that equipment subject to LDAR is identified in the field with a tag, ABC Coke will implement a Flagging and Tagging Procedure for By-Products. The component changes (i.e. additions, removal or replacements) are expected to occur during projects, turnarounds, and routine maintenance activities at which time the MOC process will be initiated (with the exception of leak repair devices which for obvious reasons are needed expeditiously). The Photo Library associated with the equipment or activity will be marked up according to LDAR Section 2.0 by the By-Products Supervisor and reviewed by the Environmental Coordinator. The marked up Photo Library may also be supplemented by Process and Instrumentation Diagrams (P&IDs) being compiled and dapted for the LDAR program. Three copies of the marked up Photo Library or P&IDs will then be given to the Third-Party LDAR Coordinator for review. Subsequently they will be forward to the Third-party LDAR Contractor to properly flag the equipment.

Materials and equipment which may be needed for this procedure include but are not limited to the following:

- handheld analyzer
- handheld data logger
- ladder
- tool pouch
- LDAR tags
- leaker tags
- lead head wire ties
- twist pliers for installing tags
- paint pens

- permanent marker
- tablet/handheld
- pen or pencil
- plant radio
- general monitoring route form
- P&ID's or Picture Library

4.1 FLAGGING

Flagging is a process taking place in the field in which the LDAR Contractor neatly writes the updated information on the lines as dictated by marked up P&IDs and/or photo logs. Flagging information will include: Photo Library page number, regulation (Subpart L, V, JCDH 8.26), service (light liquid, heavy liquid, gas/vapor, vacuum, or closed vent), LEADERS sub-process, and product code. Once flagging is complete, the LDAR Contractor will tag the components on the flagged line.

Using a P&ID or Photo Log highlighted according LDAR Section 2.0, neatly mark each new line in the unit using a paper flag indelibly marked with the following information:

- Sub-Process
- P&ID Number or Photo Number
- P&ID Line Number (if available)
- LDAR Service (LL, HL, G, CVS, VS)
- Product Code (Product Speciation)
- Regulation Code Identity
-

Follow the line to the end of the P&ID (seek assistance from By-Product personnel, if needed).

Flag at intervals that will allow the line to be readily identified, but do not over-flag the line.

Flag the switch of each pump.

Flag the point where the product or regulation changes (as shown on the P&ID or Photo Library).

Example: closed vent on a seal pot, or closed vent after a PRV, etc.

At the end of each day, return all P&IDs and the marked up Photo Library to the Third-Party LDAR Coordinator.

4.2 TAGGING

Identify the lines that have been flagged.

Tag all applicable components on the line or vessel including flanges, tees, elbows, screwed connectors, valves, instrument valves, control valves, valves, etc.

The LDAR Contractor Site Manager is responsible for confirming with the Third-Party LDAR Coordinator directives on tagging components.

Notify the flagger when you have finished tagging a line or vessel.

The tagging technician must put his/her identification number on the P&ID or Photo Log Picture to signify the tagging is complete.

4.3 UTM COMPONENTS

Components in confined spaces such as skirts on bottom of drums or towers use Accessibility Code UTM (Unsafe-To-Monitor).

For confined space components, hang the tag outside the opening and document.

For below-ground UTM components, hang tags for all components above ground level. See Section 12.0 for details on UTM components.

4.4 PUMPS

Tag all pumps subject to the LDAR Program. Do not tag the case flange and any plugs or connectors on pump housing separately (they will be monitored as part of the equipment). However, connectors or flanges on the case drain line should be tagged and documented.

4.5 INSTRUMENTATION SYSTEMS

All valves that are ½-inch or smaller and flanges or connectors ¾-inch or smaller associated with instrumentation and pressure gauges will be defined as Instrumentation Systems, as will analyzer cabinets that contain connections of this size.

Instrumentation systems subject to LDAR will be tagged and documented. However, these components will only be monitored if evidence of a potential leak to the atmosphere is found by visual, audible, olfactory, or any other detection method.

5.0 LDAR FIELD MONITORING

The following section describes the procedures that ABC Coke will use for instrument readiness, monitoring, repairing, and follow-up monitoring for all components in the LDAR program. ABC Coke will maintain a contract with a third-party contractor to perform the monitoring of components pursuant to ABC Coke's LDAR procedures.

5.1 INSTRUMENT READINESS

The LDAR monitoring technicians shall utilize Environmental Protection Agency (EPA) Method 21 procedures for monitoring of the affected components. Before any Method 21 monitoring of components may begin, several items will be checked and documented, including analyzer certification and calibration. At the beginning and end of each day, the monitoring technicians will perform and certify instrument calibration.

The monitoring instrument will then be assembled and started up according to the manufacturer's instructions. After the appropriate warm-up period, the zero gas and then calibration gas will be introduced into the instrument sample probe. The instrument readout will be adjusted to correspond to the calibration gas value. The result of this calibration procedure will be documented electronically in the LEADERS database and hard copies of the daily calibrations will be kept on file by the LDAR Consultant for 5 years. If the meter readout cannot be adjusted to the proper value, a malfunction of the analyzer is indicated and corrective action will

be taken before the start of component monitoring. Once the analyzer has been properly calibrated for use, monitoring of individual components may begin.

Monitoring will then be conducted using a TVA 1000B or comparable vapor analyzer equipped with a data logger and enhanced probe. All monitoring instruments are subject to performance evaluation requirements specified in EPA Method 21, **Appendix B**.

The TVA 1000B will be programmed with the monitoring route sequence the technician will follow through By-Products area. When monitoring a component, the TVA 1000B requires the monitoring personnel to wait the designated amount of time after which the reading will automatically be logged into the LEADERS database with a time/date stamp. If the value read is greater than the leak definitions allow, a leak is indicated.

The monitoring technicians will also carry a handheld computer that is loaded with the LEADERS FieldSmart Software. The handheld computers and TVA 1000B operate using the exact same component database. When a leak is detected by the TVA 1000B or if other information needs to be input concerning a monitored component, the technician can manually input this information into the handheld computer.

At the beginning and end of the day, a cable will be used to connect the handheld computer with the TVA 1000B and a desktop PC. The handheld computer and the TVA 1000B will be synchronized and readings will be uploaded to the desktop directly into the LEADERS Software System.

5.2 MONITORING PROCEDURES

This procedure addresses the requirements for LDAR Field Monitoring. Materials and equipment which may be required for this procedure include but are not limited to the following:

- handheld analyzer
- handheld data logger
- ladder
- tool pouch
- LDAR tags

- leaker tags
- lead head wire ties
- twist pliers for installing tags
- paint pens
- permanent marker
- tablet/handheld
- pen or pencil
- plant radio
- general monitoring route form
- P&ID's or Photo Log

Load the field route onto the handheld data logger from the LEADERS database.

The field route will determine the tag number for the starting point in the field. Components will be located using the description given by the data logger.

The component will then monitored following EPA Method 21 using an approved monitor (TVA1000B or equivalent). The analyzer's probe inlet will be placed at the surface of the potential leak interface where leakage could occur. The potential leak interface is the boundary between the process fluid and the atmosphere. For equipment with no moving parts at the leak interface, the probe should be placed directly on the leak interface. For equipment with moving parts, the probe should be placed approximately one (1) centimeter from the leak interface. For interfaces which cannot be reached with the monitoring probe (compressor seals, covered valve part, etc.), the probe will be placed as close to the leak interface as physically possible.

Care must be taken to ensure that the probe is held perpendicular to the potential leak interface, otherwise inaccurate readings will result. The probe must be moved along the interface boundary while observing the instrument readout. If an increased meter reading is observed, the probe will be moved slowly along the interface where concentrations register until the maximum reading is obtained. The probe inlet should be left at this maximum reading location for at least two times the instrument response time. The time spent monitoring each component, regardless of leak status, will equal a minimum of two times the response time of the instrument used. The maximum reading will be recorded as the component screening value. If a component has more than one potential leak interface that should be monitored (e.g., the valve packing and bonnet areas), the highest of the

instrument readings for the entire component will be recorded. Each component high reading will be stored in the TVA. See Section 7.0 for Leak Definition, Discovery and Repair.

The readings stored in the approved monitor will be transferred to the LEADERS database on the LDAR computer no later than the end of the work day. NOTE: If readings are not entered on the day in which the monitoring event took place, then those readings are not valid and must be re-monitored.

5.2.1 Valves

For valves, the most common source of leaks is at the seal between the stem and housing. To screen this source, the probe opening will be placed where the stem exits the packing gland and moved around the stem circumference. Valve housings of multipart assemblies should be screened at the surface of all points where leaks could occur (e.g., valve bonnet area).

For valves with a packing take up flange, the probe tip should be placed inside the valve packing adjustment area and moved along the periphery.

For valve housings of multipart assemblies, all areas around the valve bonnet should be monitored.

The maximum reading is recorded as the screening value.

5.2.2 Flanges and Connectors

For flanges, the probe opening will be placed at the outer edge of the flange-gasket interface and the circumference of the flange sampled. For screwed connectors, the threaded connection interface must also be screened around the circumference. A connector such as a tee includes three components and should be monitored and recorded individually. All of the threaded connection interfaces should be monitored.

5.2.3 Pumps

Pumps will be screened with a circumferential traverse at the outer surface shaft and seal interface where the shaft exits the housing. If the source is a rotating shaft, the probe inlet will be positioned within one centimeter of the shaft-seal interface. If the housing configuration prevents a complete traverse of the shaft periphery, all accessible portions must be sampled. All other joints on pump housings where leakage could occur should also be sampled. All other joints on a compressor housing shall be counted and identified as separate components, then monitored accordingly.

5.2.4 Pressure Relief Devices

Because of their design and function, pressure relief devices must be approached with **extreme caution**. These devices should not be approached during periods of process upsets, or other times when the device is likely to activate. Similarly, care must be used in screening pressure relief devices to avoid interfering with the working parts of the device.

The configuration of most pressure relief devices prevents sampling at the sealing seat. For those devices equipped with an enclosed exhaust extension, the probe inlet will be placed at approximately the center of the weep hole of the exhaust point. For those devices equipped with an open exhaust line, the probe will be placed at the center of the opening, if a weep hole is not available. Pressure relief valves in heavy or light liquid service that relieve to the atmosphere will be inspected using the AVO (audible, visual, olfactory) monitoring process. Pressure relief valves that relieve back to the process or to a closed vent system are non-monitorable.

It should be noted that personnel conducting the screening should be careful not to place hands, arms, or any parts of the body in the discharge area of the pressure relief device.

6.0 AVO INSPECTION

A weekly audio/visual/olfactory (AVO) pump inspection will be performed by ABC Coke personnel, third-party contractor or LDAR field technicians to ensure seal integrity. A record of all leaking pumps will be kept in the LEADERS database.

This procedure addresses the requirements for AVO inspections. Materials and equipment which may be required for this procedure include but are not limited to the following:

- handheld analyzer
- handheld data logger
- ladder
- tool pouch
- LDAR tags
- leaker tags
- lead head wire ties
- twist pliers for installing tags
- paint pens
- permanent marker
- tablet/handheld
- pen or pencil
- plant radio
- general monitoring route form.
- P&ID's or Photo Log

6.1 AVO INSPECTION PROCEDURES

Third-party LDAR contractors/coordinators will conduct AVO pump inspections on a weekly basis.

Pumps will be inspected for drippings or a damp area, vapor waves, product build-up, hissing or whistling sounds and odors.

In the event the AVO inspection indicates a leak, the subject component must be field monitored in accordance with Section 5.0 and documented as a leaking component in accordance with Section 7.0.

A copy of the Weekly Pump AVO Inspection Form is included as **Appendix D**.

7.0 LEAK DEFINITION, DISCOVERY AND REPAIR

The following section describes the definition and discovery of a leak and the procedures to be used for leak repair for components in the LDAR Program.

7.1 LEAK DEFINITION

The following table summarizes the current regulatory definition of a leak:

Equipment Type	Subpart V & JCDH 8.26		Subpart L & Title V	
	Monitoring Frequency	Leak Definition	Monitoring Frequency	Leak Definition
Pumps (light liquid service)	*Monthly* (Method 21)& Weekly (AVO)	≥ 500 ppm or dripping liquid	*Monthly* (Method 21)& Weekly (AVO)	≥ 500 ppm
Valves (light liquid service & gas/vapor service)	*Monthly* (if no leaks for 2 consecutive months) *Quarterly* (if leak is detected, must be 2X monthly with no leaks before going quarterly)	≥ 500 ppm	*Defers to Subpart V*	≥ 500 ppm
Connectors (light liquid service & gas/vapor service)	*Semi -Annually*	≥ 500 ppm		≥ 500 ppm
Process Vessels, Storage Tanks, Tar-intercept Sumps (Benzene gas service, black tags, connections and seals)			*Semi-Annual* (Method 21 & AVO)	≥ 10,000 ppm
Pressure Relief Devices (gas/vapor service)	*Quarterly* & After each pressure release, monitor & return the device to < 500 ppm leak no later than 5 calendar days after the release.	≥ 500 ppm	After each pressure release, monitor & return the device to < 500 ppm leak no later than 5 calendar days after the release.	≥ 500 ppm
Light Oil Sumps, Connections and Seals			*Semi-Annual* (Method 21 & AVO) / Post Cover Removal	≥ 500 ppm
Naphthalene Processing, Final Coolers, and Final Cooler Cooling Towers			*Monthly* (Method 21 & AVO) per Condition 7 in Title V Permit	≥ 500 ppm

Equipment Type	Subpart V & JCDH 8.26		Subpart L & Title V	
	Monitoring Frequency	Leak Definition	Monitoring Frequency	Leak Definition
Exhauster			*Monthly* (Method 21)	≥ 10,000 ppm
Closed Vent / Control Devices	*Quarterly* (visual)			
Pumps, Valves & Connectors, Agitators (heavy liquid service); Instrumentation System & Pressure Relief Devices (liquid service)	Monitor within 5 calendar days if evidence of potential leak by AVO or other detection method. Repair required for instrument reading above the leak definition or determined by AVO.	≥ 10,000 ppm (valves, connectors, PRD & inst. System)	Monitor within 5 calendar days if evidence of potential leak by AVO or other detection method. Repair required for instrument reading above the leak definition or determined by AVO.	≥ 10,000 ppm (valves, connectors, PRD & inst. System)

7.2 LEAK DISCOVERY AND REPAIR

Leaking components subject to LDAR are typically discovered either during routine monitoring of tagged component monitoring route(s) or during normal unit walkthroughs and other work activities conducted by LDAR Technicians, ABC Coke Operations or Maintenance, or other personnel.

Potential leak locations can be identified in the field with the LDAR tags which is coded with a unique location number.

Loose tags should be returned to the By Products LDAR Station. See Section 4.0 for procedures for orphaned or removed tags.

During a scheduled monitoring route an LDAR technician will monitor the tagged components against the leak definitions in Section 7.1. If a leak is detected and confirmed, the steps described in **Appendix E, LDAR Leak Repair Decision Tree**, will be followed to make a first attempt at repair within 5 days and repair the leak within 15 days or place the issue on the unit's Delay of Repair (DOR) list (see **Appendix F** for the **DOR Authorization Form**) and equipment maintenance schedule for repair as soon as possible.

Open-ended connectors are not allowed in piping and equipment containing fluid subject to LDAR. Examples of these are unplugged bleeder valves and uncapped pipe ends separated from the active process by only one block valve. Unit piping and equipment must be continually reviewed and monitored by both the LDAR

Contractor and unit personnel to ensure open-ended connectors are eliminated. See Section 13.0.

Any time a pressure relief device subject to LDAR vents to the atmosphere it must be reported to the LDAR Contractor as soon as possible and must be monitored by a LDAR technician within five days. If there is a rupture disk upstream of the pressure relief device, the rupture disk must be replaced within five days of the pressure release. If replacement of the rupture disk within this time is not possible without a unit shutdown it must be placed on delay of repair. This notification should be made via e-mail to the By-Products Supervisor, LDAR Site Manager, and the Third-Party LDAR Coordinator.

7.3 REPAIR OF LEAKS

If a leak is confirmed during LDAR technician monitoring, a first repair attempt should be made as soon as possible, but no later than five calendar days after detection. First repair attempts can be made by Operations as directed by the By-Products Supervisor.

NOTE: A repair attempt must be re-monitored in order to be classified as an attempt.

First attempts include but are not limited to the following:

- Tightening of the packing gland nuts
- Ensuring that the seal flush is at designed operating level, pressure, and temperature
- Placing/replacing plugs or caps on open connectors.

As described by **Appendix E**, an LDAR Monitoring Technician will recheck any first attempt repairs to verify the leak has been repaired. If the first attempt failed, the LDAR technician will provide a leak report to the By-Products Supervisor. The LDAR technician will maintain communication with the unit By-Products Supervisor and keep a continual record of first repair attempts and print and forward leak reports as required. The LDAR Site Manager and Monitoring Technician(s) are responsible for tracking the leak reports and ensuring that first attempts are made within five days of leak discovery.

If the first attempt failed to repair the leak, the unit By-Products Supervisor will arrange and schedule maintenance resources to make a required second repair attempt within 15 calendar days from the leak discovery date.

Following the second repair attempt, an LDAR Monitoring Technician will re-monitor the component to check if the repair was successful.

If the second attempt is successful, the LDAR technician will ensure the repaired leak component is returned to its normally scheduled monitoring period and route. The documentation will be completed to indicate leak repair success.

NOTE: In order for the second attempt to be considered successful it MUST be re-monitored by an LDAR technician by the 15th day. If the 15th day occurs on a weekend, an LDAR technician should be called out to re-monitor.

If the second attempt is unsuccessful and the repair cannot be completed within 15 days, the component must be placed on the unit's Delay of Repair (DOR) list and repaired in compliance with those regulations (see Section 7.4 below).

NOTE: The component must meet one of the definitions of DOR to be placed on DOR.

7.4 DELAY OF REPAIR

ABC Coke personnel will notify the LDAR Technician and Third-Party LDAR Coordinator of the existence of a component that cannot be repaired within the 15-day repair period.

For leaks that cannot be repaired within 15 days, equipment operation may continue, but the LDAR Contractor must complete a Delay of Repair (DOR) Authorization Form (included in **Appendix F**) to be approved by the ABC Coke Management and returned to the LDAR Contractor. The LDAR Contractor will then provide copies of the form to the Environmental Coordinator and input the DOR data into the LEADERS database. <u>The DOR must be approved on or before Day 15</u>.

7.5 LDAR TAG TRACKING

When LDAR tag(s) must be removed from a component subject to LDAR or when an orphaned tag is found, the following steps must be taken:

- Obtain yellow LDAR Tag Tracking Form from the LDAR Station in the generator building.
- Complete the Tracking Form, noting Tag ID number(s), date removed, and initials of person removing them. If multiple LDAR Tags are removed, string tags together and attach to the Tracking Form.
- Maintenance Department keeps the white copy and places the LDAR tag(s) and Tracking Form into the basket at the LDAR Station.
- By-Products Supervisor will note the LDAR Tag(s) in the basket and promptly return them to the proper location(s)/component(s) using the LDAR Tag Database and LDAR Photo Log.
- When the LDAR tags are replaced, By-Products Supervisor will date and initial the Tracking Form and keep the yellow copy and send the completed pink copy to the Environmental Coordinator.

7.6 DELAY OF REPAIR EXCEPTIONS

Detected leaks are to be repaired as soon as possible but no later than 15 calendar days from the date of discovery.

If a detected leak cannot be repaired within 15 days equipment operation may continue, however, LDAR contractor will provide a DOR Authorization Form (see **Appendix F**) to be approved by the By-Products Supervisor, or his/her delegate and returned to LDAR contractor. LDAR contractor will provide a copy of the form to the Third-Party LDAR Coordinator and LDAR technician. Subsequently, LDAR technician will input the data into the LDAR database. If the repair requires multiple process units to be shutdown, a plan must be developed by Operations to repair the component. The leak must be classified under at least one of the following criteria:

1) USD (Unit Shutdown) – If the repair requires a unit shutdown, the equipment repair will be scheduled and must be completed by the end of the next process unit shutdown. An example of this situation is a pump without an available spare that requires a unit shutdown to repair.

2) DMS (Dual Mechanical Seal) – For a leaking pump if the eventual repair will include a seal redesign with installation of a dual mechanical type seal with barrier fluid. This type of repair is to be completed as soon as possible but no longer than 6 months from leak discovery.

3) GE (Greater Emissions) – Leaking valves, connectors, flanges, and agitators where engineering calculations demonstrate repairing the component (e.g. shutting down and purging that section of the process) would cause greater fluid emissions than delaying the repair. In this case the component operation may continue, however, the purged material removed during eventual repair preparation must be collected and destroyed or recovered in an approved control device.

4) ISO (Isolate with Shutdown) – Leaking equipment that can be isolated without shutting the unit down. This equipment (e.g. spare pump) must be isolated, flushed and prepared for maintenance, locked out, and remain locked out until successful repairs are completed. The equipment may not be placed back into fluid service until the leak repair has been made.

5) SD (Supply Depletion) – If, during a unit shutdown, it is determined a valve assembly replacement is required but the valve assembly part supplies have become depleted. The valve assembly part supplies must have been stocked to normal quantities going into the unit shutdown for this exception to be available. In this case the DOR will not be allowed beyond the next unit shutdown unless the shutdown occurs less than 6 months after the first shutdown when the supplies were depleted.

For guidance in DOR determination, consult the Third-Party LDAR Coordinator.

Following the completion of repair and return to service, the unit By-Products Supervisor must notify the LDAR Contractor Site Manager and the Third-Party LDAR Coordinator that the component needs to be re-monitored.

7.7 LDAR CONTACT INFORMATION

LDAR Contractor Site Manager:
Aran Parker, EMS
Cell phone: (256) 227-7516

Third-Party LDAR Coordinator:
Zane Hood, PPM
Office number: (205) 836-5650
Cell number: (205) 240-9883

ABC Coke By-Products Supervisor:
Charlie Carmichael
Office number: (205) 288-3843

ABC Coke Environmental Manager:
Jay Cornelius
Office number: (205) 849-1342
Cell number: (205) 539-2813

8.0 REGULATORY RECORD KEEPING AND REPORTS GENERATION

This procedure addresses the requirements for LDAR regulatory recordkeeping and reporting. The LEADER database reports will be instrumental in the record keeping and reporting process.

8.1 RECORDKEEPING PROCEDURES

All records described in this section will be maintained in a manner that can be readily accessed at the plant site through the environmental staff.

8.1.1 Information Contained in the LDAR Database

Components that are monitored will be individually identified in the LEADERS database with unique tag numbers. A description of the component service, equipment size, type, location, monitor readings, date of monitoring event, leak repair methods, date of repair, tester number, and monitoring instrument number will be recorded for each tag number. Currently, approximately 1,400 monitorable components have been identified.

When a leak is detected, the following information will be recorded and maintained for five (5) years on file at both the ABC Coke site and by the LDAR contractor.

a) Instrument, equipment, and operator identification numbers
b) Date leak was detected and date of first attempt to repair
c) Date of successful repair of leak

d) Maximum instrument reading after leak is successfully repaired or determined to be unable to repair.
e) Emission Point
f) Repair Methods
g) "Repair Delayed" and reason for delay if not repaired within 15 days
h) Dates of process unit shutdowns occurring while equipment is unrepaired.

8.1.2 Miscellaneous Records

Other information maintained as part of the LDAR program is:

a) Photo Library and/or P&ID equipment list
b) Copies of periodic compliance reports
c) Active accessible components list

8.2 REGULATORY REPORTING REQUIREMENTS

The facility's Title V Permit addresses the LDAR Program and requires reports be submitted in accordance with 40 CFR Part 61, Subparts L, and V; 40 CFR Part 65; and JCDH - Chapters 8.26 and 8.27. Following is a general summary of the reporting requirements.

Quarterly and semiannual reporting which includes:

- monthly component leak reports
- component repairs
- components in DOR status
- dates of process unit shutdowns
- narrative explaining DORs and/or process shutdowns

8.2.1 Due Dates for Reporting Requirements

Quarterly reports are required, however no due date is established by Title V regulations; therefore, deliverable due dates will default to the semiannual report due date of 6 months following the submittal of initial report.

8.3 REQUIRED CONTENT FOR EACH REPORTING PERIOD

The information listed below should be included in reports for each quarterly reporting period:

- A summary of personnel involved in the LDAR Program including any training that was conducted during the monitoring period
- A summary of all components monitored
- A summary of all leaking components
- Percentage of leaking component types
- A summary of all components placed on DOR
- A summary of all components repaired
- A summary and total/percentage count for DTM components
- A summary and total/percentage count for UTM components
- The facts that explain each delay of repair and, where appropriate, why a process unit shutdown was technically infeasible
- A summary of added or removed components since the prior reporting period
- Accompanying reports from the Leaders database
- An identification and description of any non-compliance with the requirements of this LDAR Program
- A description of the training conducted in accordance with this LDAR Program
- Any deviations identified in the QA/QC performed under the requirements of this LDAR Program, as well as facts regarding any corrective actions taken.

8.4 CERTIFICATION STATEMENT

Each report submitted to EPA and JCDH shall be signed by the plant manager, a corporate official responsible for environmental management and compliance or a corporate official responsible for plant engineering management and shall include the following certification:

I certify under penalty of law that I have examined and am familiar with the information submitted in this document and all attachments and that this document and its attachments were prepared either by me personally or under my direction or supervision in a manner designed to ensure that qualified and knowledgeable personnel properly gather and present the information contained therein. I further certify, based on my personal knowledge or on my inquiry of those individuals immediately responsible for obtaining the information, that the information is true, accurate, and complete.

9.0 LDAR EMPLOYEE TRAINING

This procedure summarizes the LDAR training program for operations personnel. The training must be conducted prior to personnel starting LDAR Program-related work. A key aspect of the LDAR program is the awareness of both plant personnel and contractors about the nature of and purpose of the LDAR program. Plant and contractor personnel will be trained on the aspects of LDAR relevant to their jobs. Training and the required awareness will be accomplished through meetings, and a formal training presentation.

9.1 TRAINING COURSE CONTENT

ABC has a formal Annual LDAR Training presentation with sessions conducted by third-party facilitator. The following information provides an overview of the LDAR training presentation content.

- Brief regulatory review
- A review of the LDAR organizational chart
- The purpose for the equipment and leak tags
- Identification of equipment and leak tags
- Need to notify Third-Party LDAR Coordinator of missing tags
- Returning tags to the Third-Party LDAR Coordinator for demolished equipment
- Requirement to maintain caps/plugs/etc. in open ended lines when not in use.

10.0 MANAGEMENT OF CHANGE

The management of change procedure addresses the requirements for developing the MOC documentation, communicating the change to affected personnel, and documenting the change in the LDAR database. This procedure only applies to technical (LDAR-related) MOCs and is not applicable to organizational MOCs.

10.1 CHANGE REQUIREMENTS/CHANGE IDENTIFICATION

The Third-Party LDAR Coordinator and contractor will be involved in reviewing any changes to process equipment that effect the LDAR program, such as the addition of new components or change of service of existing components which are subject to LDAR requirements. The MOC process ensures the necessary changes to such a component can be made and new equipment properly tagged. The Third-Party LDAR Coordinator will oversee the MOC process and forward the information to the LDAR Contractor for proper tagging and monitoring.

All work which results in the addition of new equipment, the removal of old equipment, or a change in service which impacts the number of components subject to LDAR, shall be documented using this MOC procedure.

Changes which meet the definition of "replacements-in-kind" will be exempt from the management of change procedure.

This MOC procedure is strictly limited to changes related to components subject to LDAR in the by-products unit.

10.2 TECHNICAL CHANGE DOCUMENTATION

If the change being made affects components subject to LDAR in the by-products unit then the change will be documented via the MOC process. Upon completion of the MOC process the Photo Logs will be revised to reflect the change (P&IDs when available). All managed changes will be tracked and maintained by the Third-Party LDAR Coordinator. Refer to LDAR Section 2.0 for P&ID and/or Photo Log documentation requirements.

All managed changes will be tracked in detail in accordance with the procedures and steps included on the **LDAR MOC Tracking Form** included as **Appendix G**. The following narrative explains how these changes are tracked from the point of initiation to completion.

When operations personnel propose a change that requires management, the LDAR MOC Tracking Form will serve as an operational manifest to ensure all MOC procedures are followed from initiation to completion.

The initiator of the change will contact the Third-Party LDAR Coordinator who will issue a unique MOC ID No (consecutively ordered).

The MOC tracking form will include a brief narrative explaining the nature of the change including current equipment configuration and the proposed change. Include equipment specifications, proposed photo log revisions or other necessary sketches to demonstrate the change and all other pertinent details, etc.

The MOC tracking form will be first routed to the by-products supervisor for consideration and approval. If it is denied, it will stop there or be routed back to the MOC initiator for revisions and subsequent reconsideration. If the MOC is revised, the MOC ID No will be changed to reflect a revision and the revision number will be denoted on the tracking form (i.e., LDAR MOC 1-R1). This approval/denial process will be maintained for all subsequent departments involved.

Following approval from the By-products Supervisor the MOC tracking form will be routed to the Engineering Department, the Third-Party LDAR Coordinator, and then the Environmental Coordinator. Upon approval by these departments, the form will be routed back to the By-Products Supervisor for FINAL approval and dispatch of the order to implement the change.

After completion of the change, the Third-Party LDAR Coordinator will revise the Photo Library and accompanying tables.

Each change to LDAR components will be numbered in sequential order as follows: LDARMOC1, LDARMOC2, etc. Furthermore, MOC revisions during the approval process will be denoted by amending the MOC ID as follows: LDARMOC-R2.

Each managed change will be designated by one of three levels of priority as follows:

- *Level 1 – Critical*: This change will interrupt operations and must be implemented as rapidly as possible and each approving party has a maximum <u>one (1) hour</u> to approve or deny the change.

- *Level 2 – Important*: This change is important to optimize operations but will not cause an interruption of operations while awaiting completion of the MOC. Each approving party has four (4) shift hours to approve or deny the requested change.

- *Level 3 – Requested Change*: This change is requested to improve on current operational efficiency but is not critical to operations. Each approving party has one (1) day to approve or deny the requested change.

10.3 ASSIGNMENT OF RESPONSIBILITY

The By-products Supervisor will evaluate the change from an overall operational and budgetary perspective and will approve the change for review by all departments and then issue final approval upon completion.

The Engineering Department will evaluate the change in regard to engineering design, operation and process performance.

The Third-Party LDAR Coordinator will evaluate the change in regard to LDAR regulatory compliance, database accuracy and tracking all LDAR MOC Forms from the point of initiation to completion. In addition the LDAR coordinator ensures the changes in component inventory are accurately recorded in the Enhanced LDAR database and properly identified and tagged. All activities will be communicated to the on-site LDAR contractor.

The Environmental Coordinator will evaluate the change in regard to LDAR compliance and is the final approval in terms of regulatory compliance for the facility.

The ABC Coke By-products Supervisor will provide final signoff to indicate the MOC has been completed.

10.4 TEMPORARY TECHNICAL CHANGES

Temporary changes, whether standard or emergency, will be implemented in the same manner as permanent changes except that the time period for the change to be in place must be identified. The temporary change should be communicated to

the ABC Coke Third Party LDAR Coordinator and the LDAR Contractor Site Manager.

10.5 ASSURANCE

The ABC Coke by-product supervisor will not sign-off on the MOC until confirmation is received that all new components subject to LDAR have been tagged and are in the data base and the components have been monitored.

Following the tagging of components subject to LDAR, the new or modified equipment shall be field-verified by the LDAR contractor, and an operations representative to assure that the components subject to LDAR have been properly identified. The name of those individuals involved with field verification should be included in the pre-startup review. The walk down must take place within 60 days of when the project is completed.

11.0 AUDITING

LDAR audits cover the main elements and procedures of the program and will be performed by ABC Coke personnel or contract auditors as well as third-party auditors.

11.1 PURPOSE

Periodical audits of the LDAR Program will be part of the compliance assurance process. The intent of these audits will be to verify that the monitoring is being performed as required and program maintenance activities are being followed and are effective in maintaining compliance. These audits fall under the following categories.

- Routine audit of the main elements of the program
- Audit of program by ABC Coke auditors (LDAR MOC process)
- Audit of program by third party auditors

Documentation of the audits, including deficiencies noted along with any corrective actions taken or planned along with a schedule for completion, will be maintained on site by the ABC Coke Environmental Coordinator. Paper copies of information reviewed under the audit will be maintained in the Environmental Department's central files.

11.2 ROUTINE AUDITS

The following routine audits will be conducted by LDAR Contractor, Third-Party LDAR Coordinator or Environmental Coordinator.

11.2.1 Monthly

Reports/forms reviewed and audits conducted:

- Repeat Leak Report – Report given to maintenance and the maintenance coordinators showing all components that have leaked twice or more during the past 12-month period. If a component has leaked 3 times or more, it is put on a watch list and looked at to determine why the repairs are not helping.

- Leak Report - Report of all leaks detected, repair attempts made, and whether or not repair attempt was successful.

- Maintenance Action Alert - Report of all leaks found which require maintenance (i.e. repair outstanding).

- Open Ended Line Report – Report of all OEL found by LDAR Contractor (if applicable).

- Calibration Report - Details precision calibration of monitoring equipment per Method 21.

- Monitoring Balance Report.

- Delay of Repair Report – Report of all leaks currently on DOR (if applicable).

- DOR Authorization Forms.

- Leaker Audits (tags, first attempts, data entered, re-monitors) - Perform a check of 10% of the leaker data for that time period, but no fewer than 5 leakers, to verify leak tags were hung and include all required information, first attempts/re-monitoring was performed, and database is accurate.

- Tagging Verification Audits – Random field check for missing tags.

11.2.2 Annually

DTM/UTM/Exempt Audits - Field check components identified as DTM/UTM/Exempt to ensure that components meet guidelines for designation. Conducted by (by ABC Coke Third-Party LDAR Coordinator)

11.3 AUDIT OF LDAR PROGRAM

Audits of ABC Coke's LDAR Program will be conducted both internally as part of the MOC process and annually by a third party.

11.3.1 Internal ABC Coke Audit

An internal audit of the LDAR Program will be conducted during and after the completion of a MOC process. The By-Products Supervisor, and the Third-Party LDAR Coordinator will verify the completion of the change to the LDAR component within 60 days of project completion. This audit shall include P&ID/Photo-Log review, changes made in the field, and the LDAR tagging system and is documented in the LDAR MOC process.

11.3.2 Third-Party External Audit

A third party external audit of the LDAR Program will be conducted annually by the Third-Party LDAR Coordinator/LDAR Contractor. This audit shall be conducted using guidelines or the approach described **Appendix H**. It includes comparative monitoring, records review, tagging procedures, data management, and observation of the LDAR technicians' monitoring and measuring techniques.

12.0 MONITORING DTM AND UTM COMPONENTS

12.1 DIFFICULT-TO-MONITOR COMPONENTS (DTM)

DTM components will be designated as DTM when monitoring requires elevating personnel more than 2 meters above ground or a fixed platform. Monitoring of DTM components will be conducted once per year, the same month of each year,

if possible. Monitoring personnel will be required to follow facilities safety procedures, including use of safety harness and other fall prevention measures.

The use of a hydraulic personnel lift and/or scaffolding may be necessary to reach these components.

DTM monitoring will be conducted with two LDAR technicians present.

A summary of DTM components is provided on **Table 7, Summary of ABC Coke DTM Components**.

If a component is to be added to the DTM list, the Third-Party LDAR Coordinator should be notified to include the date in the LDAR database and to modify **Table 7** in the procedure. The number of DTM components should be below 3% of the total number of LDAR components.

12.2 UNSAFE-TO-MONITOR COMPONENTS (UTM)

UTM components are designated unsafe due to monitoring personnel potentially being exposed to immediate danger as a consequence of monitoring and are generally related to confined space entry. ABC Coke will only monitor designated UTM components when the unsafe condition does not exist but not more frequently than the periodic monitoring schedule is otherwise applicable.

When a listed UTM component becomes safe to monitor, the Environmental Manager or Environmental Coordinator will contact the Third-Party LDAR Coordinator/Contractor who will then schedule the monitoring of component(s) and update the LDAR database and **Table 8, Summary of ABC Coke UTM Components**, accordingly.

Table 8 also summarizes the reason the component is designated as UTM and the plan to monitor if the component can be monitored safely.

12.3 INACCESSIBLE COMPONENTS

Inaccessible components will be exempt from routine monitoring requirements. This applies to light liquid or gas/vapor connectors. If a connector is observed by visual, audible, olfactory, or other means to be leaking, the leak must be repaired

no later than 15 calendar days after the leak is detected. An inaccessible connector is one that is:

1) Buried;
2) Insulated in a manner that prevents access to the connector by a monitor probe;
3) Obstructed by equipment or piping that prevents access to the connector by a monitor probe;
4) Unable to be reached from a wheeled scissor-lift or hydraulic-type scaffold which would allow access to connectors up to 7.6 meters (25 feet) above the ground;
5) Inaccessible because it would require elevating the monitoring personnel more than 2 meters above a permanent support surface or would require the erection of scaffold; or
6) Not able to be accessed at any time in a safe manner to perform monitoring. Unsafe access includes, but is not limited to, the use of a wheeled scissor-lift on unstable or uneven terrain, the use of a motorized man-lift basket in areas where an ignition potential exists, or access would require near proximity to hazards such as electrical lines, or would risk damage to equipment.

13.0 OPEN-ENDED LINE CONTROL

This procedure describes the steps required to identify, tag and control OELs that are subject to LDAR requirements. This includes the use of OEL Tags installed where plugs/caps/flanges/etc. are removed from bleeders that are opened for work, verification, operations on equipment within specification in an efficient and controlled manner. Both OEL Tags and the OEL Log Book will be needed to implement this procedure

Each OEL shall be equipped with a cap, blind flange, plug, or a second valve that shall seal the open end at all times except during operations requiring process fluid flow through the open-ended valve or line, or during maintenance or repair.

The LDAR Contractor will notify the unit of any open-ended lines and valves. The By-Products Supervisor is responsible for plugging open-ended lines and valves.

OEL reports will be submitted to the Third-Party LDAR Coordinator and must include the date of the repair, personnel involved, and corrective actions taken.

13.1 OEL CONTROL

OEL Tags will be utilized when preparing equipment for maintenance or as part of routine maintenance NOT associated with a lock out/tag out (LOTO).

As soon as a plug/cap/flange/etc. is removed from an OEL, an OEL Tag (see **Appendix I**) will be attached using a carabiner/clip/hook/etc. on the bleeder and/or tubing on which the plug/cap/flange/etc. has been removed. Removals may include but are not limited to the following activities: purging, flushing, or draining as part of preparation for maintenance work.

NOTE: Anytime a plug/cap/flange/etc. is removed, an OEL Tag will be attached to that location before proceeding.

NOTE: Small tubing, transmitter drains, etc. are included and, if open, are OELs.

NOTE: One tag per panel can be used for electrical panels, analyzers, and instrumentation. However, before removing the OEL Tag, all caps/plugs/etc. must be put back in place.

Once the open end is removed and the tag is hung, the employee shall provide the following information in the form of a checklist:

- Number of the tag(s) being hung in the field
- Location Description
- Equipment Name and LDAR Tag Number
- Name of the employee hanging the OEL Tag(s)
- Date the cap or plug was removed
- Date the cap or plug was installed after work was completed
- Final signature indicating completion of work and removal of the OEL Tag.

The final signed OEL Checklist will be submitted to the Environmental Department and maintained by the Environmental Manager in a binder. Completed checklist forms must be kept in the "inactive" section of the binder/log book for at least 30 days after completion.

All outstanding open ends must be addressed by the shift leaders at shift change.

APPENDICES

APPENDIX A – ABC COKE LDAR PROGRAM ORGANIZATION

ABC COKE LDAR PROGRAM ORGANIZATION

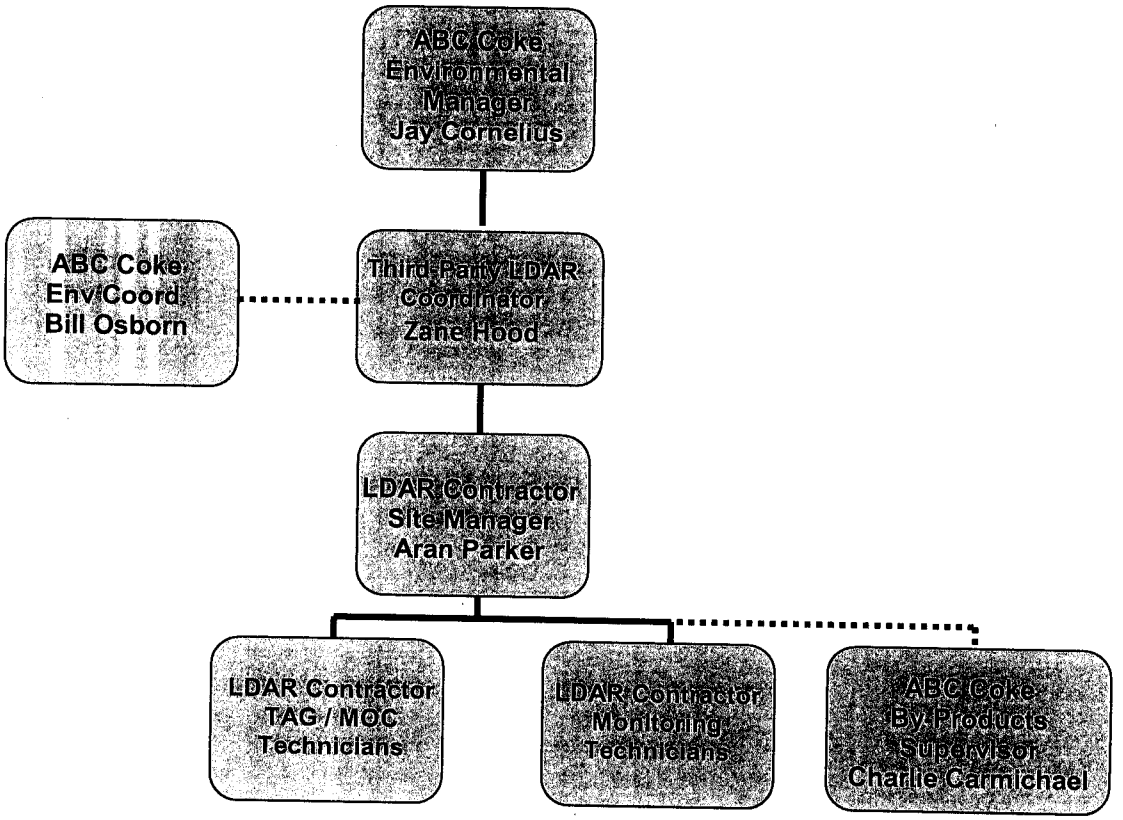

Roles and Responsibilities

Third-Party LDAR Coordinator / PPM Consultants, Inc.

- Provide consultancy support to the ABC Coke team to deliver legal compliance, corporate expectations, and continual improvement.
- Train and coach LDAR Personnel, complete internal and external reports, interface with agencies, and provide compliance assurance.
- Interface with LDAR Contractor to ensure that all aspects of the federal and state regulations are met.
- Work closely with operations, engineering and maintenance to ensure the plant is in compliance with all applicable LDAR regulations.
- Coordinate compliance audits and inspections, and follow-up.
- Support plant Health and Safety processes through participation in audits, inspections, HAZOPs, regulatory reviews, etc.

- Periodically represent the facility in community forums, presentations, and public meetings.

ABC Coke Environmental Coordinator

- Serve as primary process unit point-of-contact for Third-Party LDAR Coordinator and LDAR Contractor Site Manager.
- Provide support and guidance for unit personnel to achieve consistent LDAR compliance.
- Responsible along with Training Personnel to ensure all necessary training is developed and administered to LDAR plant personnel to achieve consistent LDAR compliance.
- Monitor unit MOCs and general operation for changes impacting LDAR monitoring program.
- Determine proper LDAR class (light liquid, gas/vapor, etc.) for new or modified process equipment.
- Markup Photo Library or P&ID's showing LDAR classification to reflect changes in the process unit and forward these drawings to Third-Party LDAR Coordinator for inclusion in program.

LDAR Contractor Site Manager

- Manage the site LDAR contractor team.
- Perform daily toolbox safety meetings.
- Perform weekly safety meetings.
- Perform and track random drug screenings.
- Ensure work is performed in a safe and secure manner.
- Maintain overall program management and responsibility.
- Administer technician level tests, Method 21 refresher, LEADERS™ software training, field operations, and technician cross training.
- Regularly audit the program per EPA, JCHD, ABC Coke and LDAR contractor standards.
- Assure ABC Coke of complete regulatory compliance per EPA, State, and LDAR contractor standards.
- Have a working knowledge of the LEADERS software and be responsible for issuing the reports.

LDAR Contractor Tagging/MOC Technician

- May be dual role of LDAR Contractor Site Manager and Monitoring Technicians
- Review all MOCs that effect LDAR components and make associated field and database changes.
- Actively look for and tag new components in the field.
- Actively look for and replace removed components in the field.
- Document new components added using LEADERS FieldSmart™.
- Verify component operating status as determined by monitoring technicians.

- Perform technician comparative monitoring using LEADERS™ Technician Quality Audit.
- Perform Open-end component audit using LEADERS™ Open-end Report.
- QA/QC Units tagging/documentation/routing/etc.
- Audit tag data and reading data using LEADERS™ Tag Change report, Regulatory Integrity Analysis.
- Ensure monitoring completion using LEADERS™ Monitoring Balance Sheet.

LDAR Contractor Monitoring Technician

- Perform all required visual inspections and leaking component re-monitoring using LEADERS FieldSmart™.
- Responsible for following leaks from initial detection to confirmation the leaks have been addressed.
- Perform daily calibration per Method 21 (pre and post monitoring).
- Perform Method 21 monitoring (DTM, ACC, UTM, Monthly, Quarterly, Annually).
- Determine component operating status
    - Input background reading
    - Input PPMV reading
    - Leaking information
    - Input AVO leak status
    - Input open-end status

APPENDIX B – METHOD 21

40 CFR Part 60 Appendix A-7
Method 21

Method 21 is applicable for the determination of VOC leaks from process equipment. These sources include, but are not limited to, valves, flanges and other connections, pumps, and compressors, pressure relief devices, process drains, open-ended valves, pump and compressor seal system degassing vents, accumulator vessel vents, agitator seals, and access door seals.

A portable instrument (such as a TVA 1000B or TVA 2020) is used to detect VOC leaks from individual sources.

- The VOC instrument detector shall respond to the compounds being processed. Detector types that may meet this requirement include, but are not limited to, catalytic oxidation, flame ionization, infrared absorption, and photoionization.
- The instrument shall be capable of measuring the leak definition concentration specified in the regulation.
- The scale of the instrument meter shall be readable to ± 2.5 percent of the specified leak definition concentration.
- The instrument shall be equipped with an electrically driven pump to ensure that a sample is provided to the detector at a constant flow rate.
- The instrument shall be equipped with a probe or probe extension or sampling not to exceed 6.4 mm (1/4 in) in outside diameter, with a single end opening for admission of sample.
- The instrument shall be intrinsically safe for operation in explosive atmospheres. The instrument shall, at a minimum, be intrinsically safe for Class 1, Division 1 conditions, and/or Class 2, Division 1 conditions. The instrument shall not be operated with any safety device, such as an exhaust flame arrestor, removed.

Reagents and Standards

Two gas mixtures are required for instrument calibration and performance evaluation:

- Zero gas: Air < 10 ppm by volume (ppmv) VOC.
- Calibration Gases: For each organic species that is to be measured during individual source surveys, obtain or prepare a known standard in air at a concentration approximately equal to the applicable leak definition specified in the regulation.
- Cylinder Gases: If cylinder gas mixtures are used, they must be analyzed and certified by the manufacturer to be within 2 percent accuracy, and a shelf life must be specified. Cylinder standards must be either reanalyzed or replaced at the end of the specified shelf life.
- Prepared Gases: Calibration gases may be prepared by the user according to any accepted gaseous preparation procedure that will yield a mixture accurate to within 2 percent. Prepared standards must be

replaced each day of use unless it is demonstrated that degradation does not occur during storage.

- Mixtures with non-Reference Compound Gases: Calibration may be performed using a compound other than the reference compound. In this case, a conversion factor must be determined for the alternative compound such that the resulting meter readings during source surveys can be converted to reference compound results.

Sample Collection, Preservation, Storage, and Transport

- Assemble and start up the instrument according to the manufacturer's instructions for recommended warm-up period and preliminary adjustments
- A response factor must be determined for each compound that is to be measured, either by testing or from reference sources. The response factor tests are required before placing the analyzer into service, but do not have to be repeated at subsequent intervals.
- Calibrate the instrument with the reference compound as specified in the applicable regulation. Introduce the calibration gas mixture to the analyzer and record the observed meter reading. Introduce zero gas until a stable reading is obtained. Make a total of three measurements by alternating between the calibration gas and zero gas. Calculate the response factor for each repetition and the average response factor.
- The instrument response factors for each of the individual VOC to be measured shall be less than 10 unless otherwise specified in the applicable regulation. When no instrument is available that meets this specification when calibrated with the reference VOC specified in the applicable regulation, the available instrument may be calibrated with one of the VOC to be measured, or any other VOC, so long as the instrument then has a response factor of less than 10 for each of the individual VOC to be measured.
- If response factors have been published for the compounds of interest for the instrument or detector type, the response factor determination is not required, and existing results may be referenced.
- Calibration Precision: The calibration precision test must be completed prior to placing the analyzer into service and at subsequent 3-month intervals or at the next use, whichever is later.
- Make a total of three measurements by alternately using zero gas and the specified calibration gas. Record the meter readings. Calculate the average algebraic difference between the meter readings and the known value. Divide this average difference by the known calibration value and multiply by 100 to express the resulting calibration precision as a percentage.
- The calibration precision shall be equal to or less than 10 percent of the calibration gas value.
- Response Time: The response time test is required before placing the instrument into service. If a modification to the sample pumping system or

flow configuration is made that would change the response time, a new test is required before further use.

- Zero gas should be introduced into the instrument sample probe. When the meter reading has stabilized, switch quickly to the specified calibration gas. After switching, measure the time required to attain 90 percent of the final stable reading. Perform this test sequence three times and record the results. Calculate the average response time.
- The instrument response time shall be equal to or less than 30 seconds. The instrument pump, dilution probe (if any), sample probe, and probe filter that will be used during testing shall all be in place during the response time determination.

Instrument Calibration

Calibrate the VOC monitoring instrument as follows: after the appropriate warm-up period and zero internal calibration procedure, introduce the calibration gas into the instrument sample probe. Adjust the instrument meter readout to correspond to the calibration gas value.

Individual Source Surveys

Type I-Leak Definition Based on Concentration: Place the probe inlet at the surface of the component interface where leakage could occur. Move the probe along the interface periphery while observing the instrument readout. If an increased meter reading is observed, slowly sample the interface where leakage is indicated until the maximum meter reading is obtained. Leave the probe inlet at this maximum reading location for approximately two times the instrument response time. If the maximum observed meter reading is greater than the leak definition in the applicable regulation, record and report the results as specified in the regulation reporting requirements.

Examples of the application of this general technique to specific equipment types are:

- Valves: The most common source of leaks occurs around the seal between the stem and the housing. The probe should be placed at the interface where the stem exits the packing gland and a sample should be taken along the stem circumference. The probe should also be place at the interface of the packing gland take-up flange seat and the periphery should be sampled. In addition, survey valve housings of multipart assembly at the surface of all interfaces where a leak could occur.
- Flanges and other connections: For welded flanges (if applicable), the probe should be placed at the outer edge of the flange-gasket interface the sample should be taken around the circumference of the flange. Other types of non-permanent joints (such as threaded connections) should be sampled with a similar traverse.
- Pumps and compressors: A circumferential traverse should be conducted at the outer surface of the pump or compressor shaft and seal interface. If the source is a rotating shaft, position the probe inlet within 1 cm of the shaft-seal interface for the survey. If the housing configuration prevents a

complete traverse of the shaft periphery, sample all accessible portions. Sample all other joints on the pump or compressor housing where leakage could occur.

- Pressure relief devices: The configuration of most pressure relief devices prevents sampling at the sealing seat interface. For those devices equipped with an enclosed extension, or horn, place the probe at approximately the center of the exhaust area to the atmosphere.
- Process drains: For open drains, place the probe inlet at approximately the center of the opening to the atmosphere. For covered drains, place the probe at the surface of the cover interface and conduct a peripheral traverse.
- Open-ended Lines or Valves: Place the probe inlet at approximately the center of the opening to the atmosphere.
- Seal System Degassing Vents and Accumulator Vents: Place the probe inlet at approximately the center of the opening to the atmosphere.
- Access door seal: Place the probe inlet at the surface of the door seal interface and conduct a peripheral traverse.

Type II - "No Detectable Emission": Determine the local ambient VOC concentration around the source by moving the probe randomly upwind and downwind at a distance of one to two meters (approximately 3 ft. and 6 ft.) from the source. If an interference exists with this determination due to a nearby emission or leak, the local ambient concentration may be determined at distances closer to the source, but in no case shall the distance be less than 25 centimeters (approximately 10 inches). Then move the probe inlet to the surface of the source and determine the concentration as outlined in the heading above titled: "Type I-Leak Definition Based on Concentration."

The difference between these concentrations determines whether there are no detectable emissions. Record and report the results as specified by the regulation. For those cases where the regulation required a specific device installation, or that specified vents be ducted or piped to a control device, the existence of these conditions shall be visually confirmed. When the regulation also requires that no detectable emissions exist, visual observations and sampling surveys are required.

Examples of the application of this general technique to specific equipment types are:

- Pumps or Compressor Seals: If applicable, determine the type of shaft seal. Perform a survey of the local area ambient VOC concentration and determine if detectable emissions exist as described above.
- Seal System Degassing Vents, Accumulator Vessel Vents, and Pressure Relief Devices: If applicable, observe whether or not the applicable ducting or piping exists. Also, determine if any sources exist in the ducting or piping where emissions could occur upstream of the control device. If the required ducting or piping exists and there are no sources where the emissions could be vented to the atmosphere upstream of the control device, then it is presumed that no detectable emissions are

present. If there are sources in the ducting or piping where emissions could be vented or sources where leaks could occur, the sampling surveys described above shall be used to determine if detectable emissions exist.

Alternative Screening Procedure: A screening procedure based on the formation of bubbles in a soap solution that is sprayed on a potential leak source may be used for those sources that do not have continuously moving parts, that do not have surface temperatures greater than the boiling point or less than the freezing point of the soap solution, that do not have open areas to the atmosphere that the soap solution cannot bridge, or that do not exhibit evidence of liquid leakage. Sources that have these conditions present must be surveyed using the Type I or Type II instrument techniques described above.

APPENDIX C – TABLES

TABLE 1
LDAR EXEMPTION DETERMINATION
LIGHT LIQUID PUMPS

PUMPS COVERED BY LDAR (IN VHAP SERVICE)			
Line #	**Pump Name:**		
	Date Information Updated:		
1	If No, finished	Is pump in 10% (or greater) VHAP light liquid service?	YES/NO
2	If No, skip to Line 8	Does the pump have a dual mechanical seal system that includes a barrier fluid system?	YES/NO
3	If answer is Yes to ANY of these 3 questions, answer Lines 4-9	Is the dual mechanical seal system operated with the barrier fluid at a pressure that is at all times greater than the pump stuffing box pressure?	YES/NO
		Is the dual mechanical seal equipped with a barrier fluid degassing reservoir that is routed to a process or fuel gas system or connected by a closed-vent system to a control device?	YES/NO
		Is the dual mechanical seal equipped with a closed-loop system that purges the barrier fluid into a process stream?	YES/NO
4		What is the barrier fluid?	
5		Is the barrier fluid in light liquid service?	YES/NO
6		Is the barrier fluid system equipped with a sensor that will detect failure of the seal system, the barrier fluid system, or both?	YES/NO/BOTH
7		Is the sensor equipped with an alarm or observed daily?	YES/NO
8		Is the pump designed with no externally actuated shaft penetrating the pump housing?	YES/NO
9		Is the pump equipped with a closed-vent system capable of capturing and transporting any leakage from the seal or seals to a process or to a fuel gas system or to a control device?	YES/NO

TABLE 2
LDAR EXEMPTION VERIFICATION
LIGHT LIQUID PUMPS

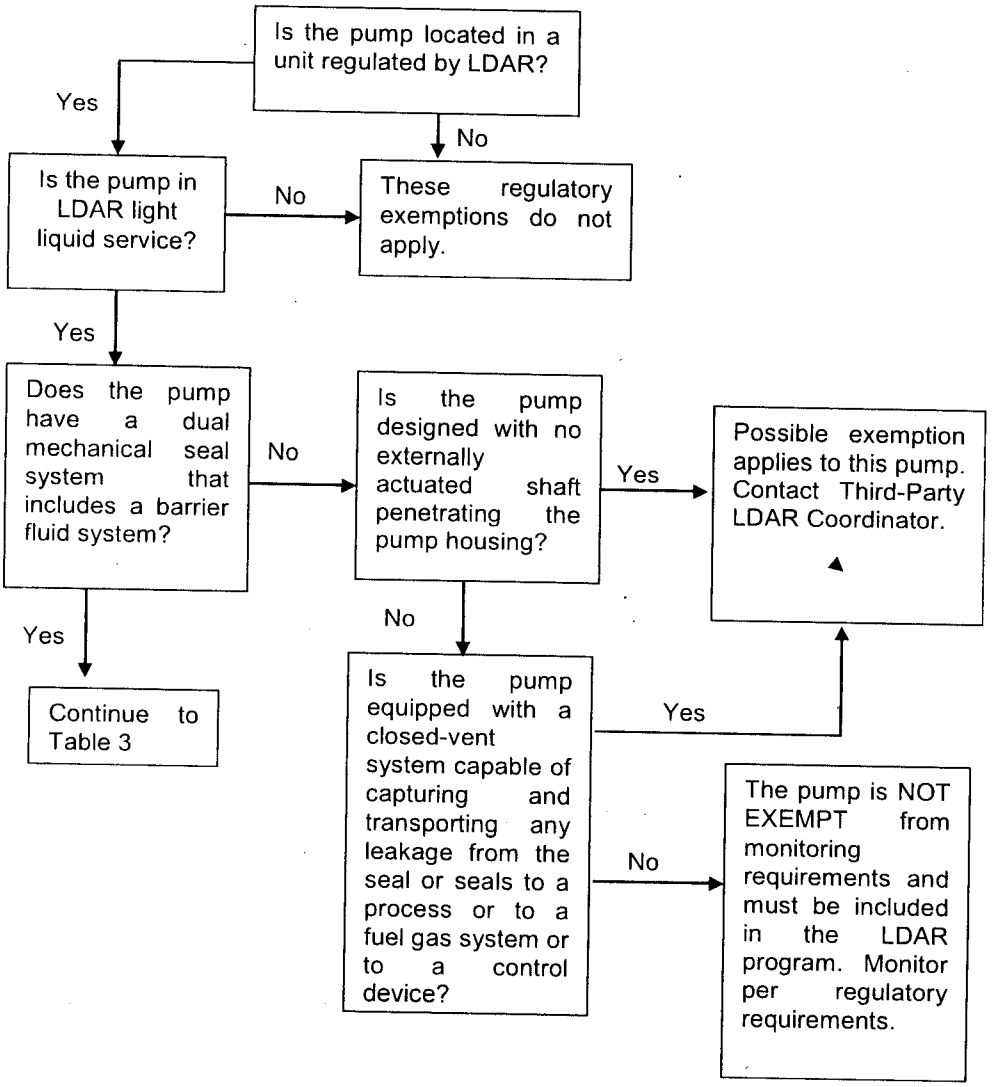

TABLE 3
LDAR EXEMPTION VERIFICATION
DUAL MECHANICAL SEAL PUMPS

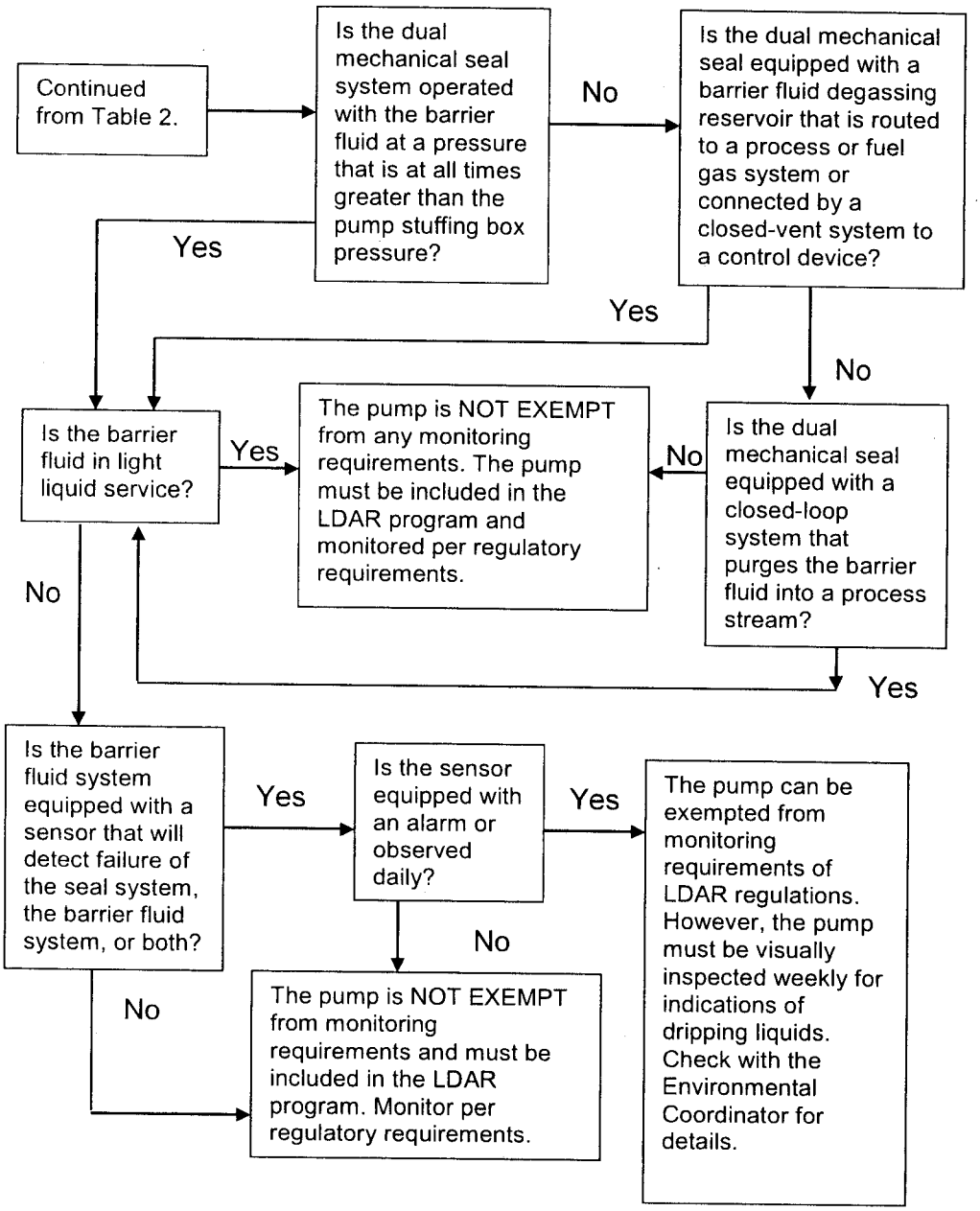

TABLE 4
LDAR EXEMPTION DETERMINATION
SAMPLING CONNECTION SYSTEMS

SAMPLING CONNECTION SYSTEMS COVERED BY LDAR (IN VHAP SERVICE)			
Line #	**Sampling Connection System Name:** **Date Information Updated:**		
1	IF No, Finished	Is sampling connection system* in 10% (or greater) HAP service?	YES/NO
2	IF No, Finished	Is sample routine?	YES/NO
3	IF no, check with Environmental Coordinator for compliance	Is the sampling connection system equipped with a closed-purge, closed-loop, or closed-vent system? (Gases displaced during filling of the sample container are not required to be collected or captured.)	YES/NO
4	IF Yes to Either of these 4 questions, then Finished. IF No is answered for all 4 of these questions, Contact Environmental Coordinator	Does the closed-purge, closed-loop, or closed-vent system return the purged process fluid directly to the process line?	YES/NO
		Does the closed-purge, closed-loop, or closed-vent system collect and recycle the purged process fluid to a process?	YES/NO
		Is the closed-purge, closed-loop, or closed-vent system designed and operated to capture and transport the purged process fluid to a control device?	YES/NO
		Does the closed-purge, closed-loop, or closed-vent system collect, store, and transport the purged process fluid to a system or facility (A) operated in compliance with the requirements of 40 CFR Part 63, Subpart G, or (B) A treatment, storage, or disposal facility subject to regulation under 40 CFR Part 262, 264, 265, or 266, or (C) facility permitted, licensed, or registered by a State to manage municipal or industrial solid waste, if the process fluids are not hazardous waste?	YES/NO

**In-situ* sampling systems and sampling systems without purges are exempt from the requirements. In-situ sampling systems means non-extractive samplers or in-line samplers.

TABLE 5
LDAR EXEMPTION VERIFICATION
SAMPLING CONNECTION SYSTEMS

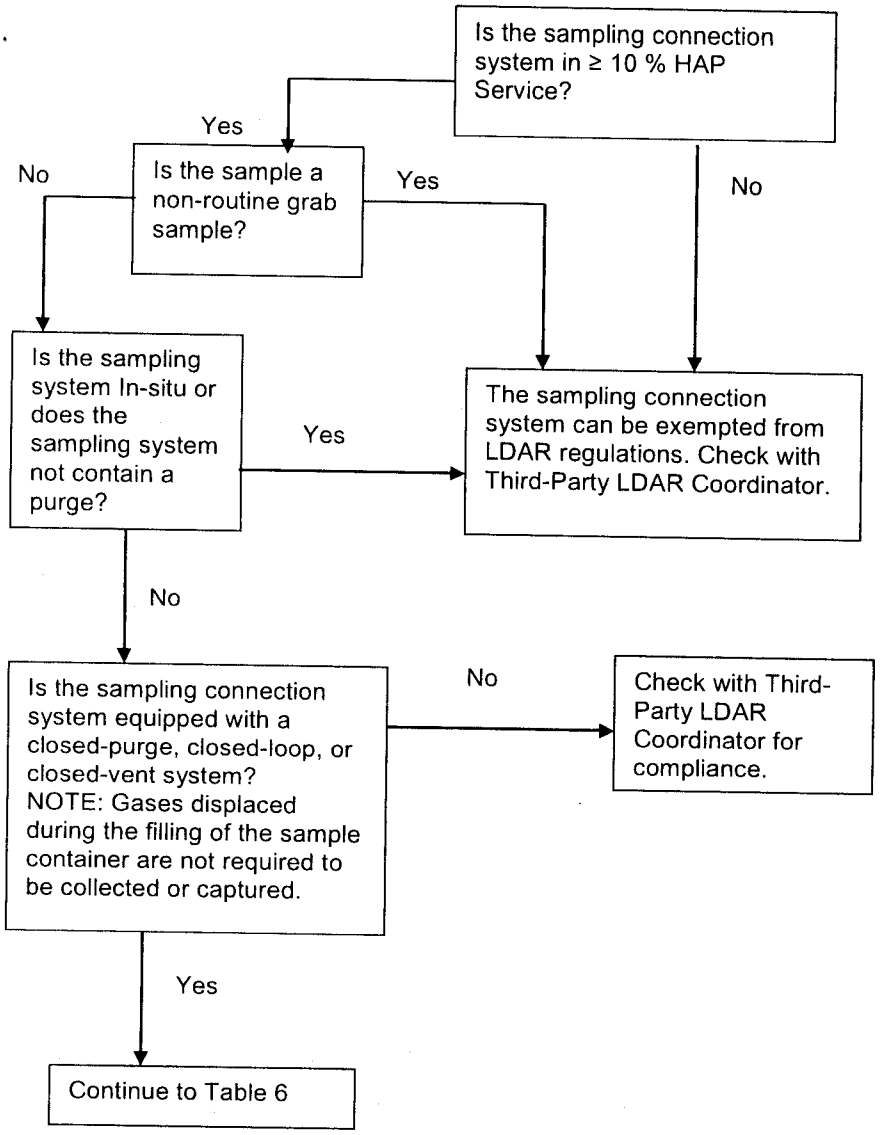

TABLE 6
LDAR EXEMPTION VERIFICATION (CONT'D)
SAMPLING CONNECTION SYSTEMS

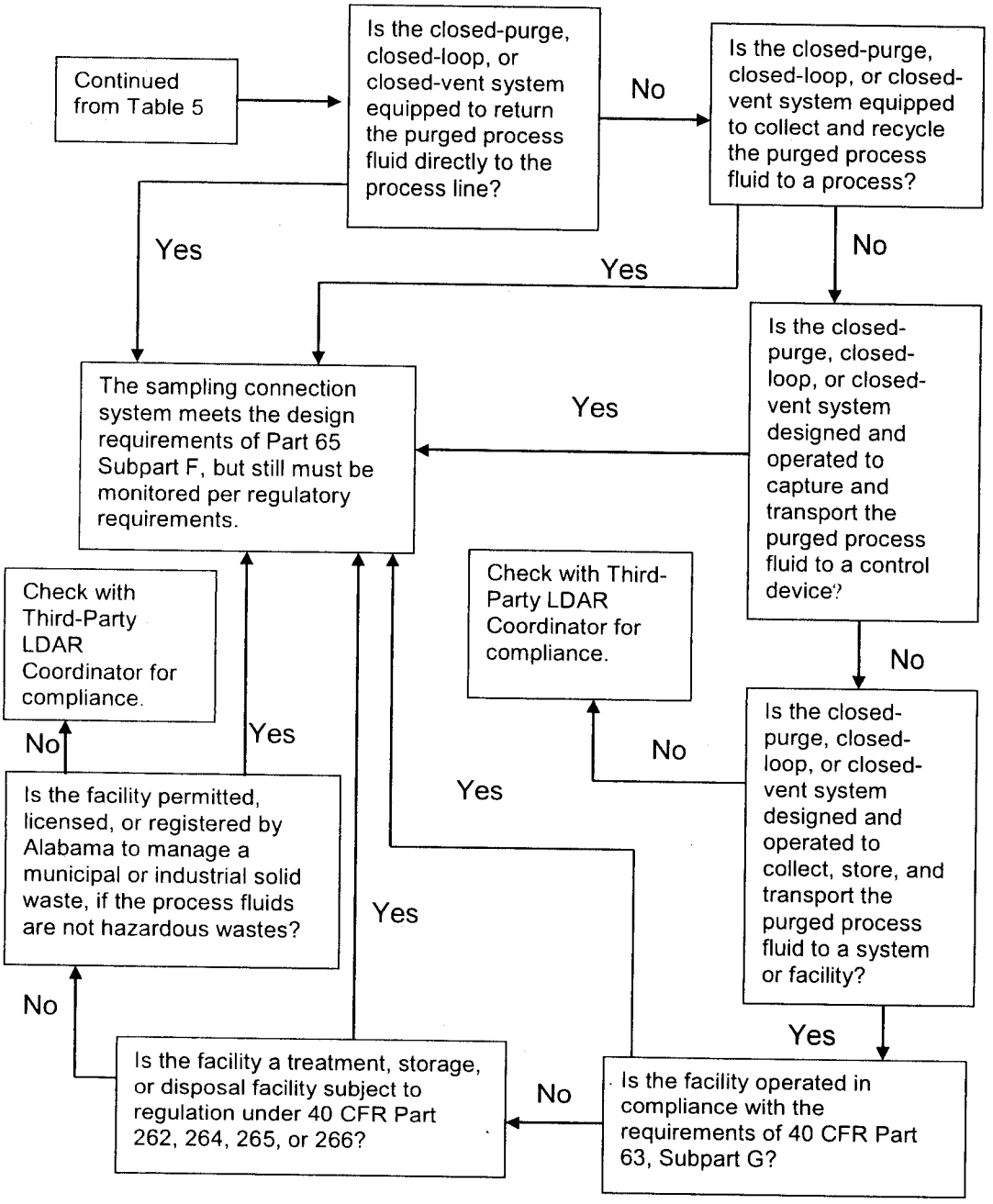

TABLE 7. SUMMARY OF ABC COKE DTM COMPONENTS	
TAG NUMBER	**LOCATION DESCRIPTION**
B27	36" VALVE SOUTH EXHAUSTER CUTOFF
B123	4" PURGE LINE (3) 4"FL ("B" PRECIPITATOR) 6WC
B143	1" VALVE & GAUGE EAST SCRUBBER OUTLET W/2WC & 20SC
B144	2" VALVE EAST SCRUBBER TOP OUTLET W/2FL, 9WC & 4SC
B155	20" COG MAIN WT-OFF UNDERFIRE TO WILPUTTE (BLANKED)
R116	(2) 6"VALVES, 4FL & 8WC OVERFLOW FROM WASH OIL DECANTER TO P
R141	8" VALVE WASH OIL LINE @ WILPUTTE DECANTER W/2FL & 6WC
R142	(2) 8" VALVES WASH OIL LINE @ WILPUTTE DECANTER W/4FL & 7WC
R143	(2) 8" VALVES WASH OIL LINE @ WILPUTTE DECANTER W/ 4FL & 7WC
R163	4" VALVE #4 WASH OIL SCRUBBER SPIRAL COOLER INLET W/3FL & 8W
R170	4" VALVE #2 WASH OIL SCRUBBER SPIRAL COOLER INLET W/3FL & 8W
R228	6" VALVE #1 SPIRAL COOLER @ PRIMARY COOLER INLET W/3FL & 9WC
R232	6" VALVE #3 SPIRAL COOLER @ PRIMARY COOLER INLET W/3FL & 9WC
R266	LIQUOR LINE FROM PRIMARY COOLERS TO SPIRAL COOLERS W/7WC
R267	6" VALVE LIQUOR LINE FROM SPIRAL COOLERS @ PRIMARY COOLERS W
R268	6" VALVE LIQUOR LINE TO SPIRAL COOLERS @ PRIMARY COOLERS W/3
R269	6" VALVE LIQUOR LINE FROM SPIRAL COOLERS @ PRIMARY COOLERS W
R270	6" VALVE LIQUOR LINE TO SPIRAL COOLERS @ PRIMARY COOLERS W/2
R271	6" VALVE LIQUOR LINE FROM SPIRAL COOLERS @ PRIMARY COOLERS W
R272	6" VALVE LIQUOR LINE TO SPIRAL COOLERS @ PRIMARY COOLERS W/2
R273	6" VALVE LIQUOR LINE FROM SPIRAL COOLERS @ PRIMARY COOLERS W
R274	6" VALVE LIQUOR LINE TO SPIRAL COOLERS @ PRIMARY COOLERS W/2
R275	6" VALVE LIQUOR LINE TO SPIRAL COOLERS @ PRIMARY COOLERS W/2
R284	6" VALVE LIQUOR LINE TO SPIRAL COOLERS @ PRIMARY COOLERS W/2
R285	6" VALVE LIQUOR LINE TO SPIRAL COOLERS @ PRIMARY COOLERS W/3
R351	6", 3" & 1" VALVES LIQUOR LINE NEAR LITTLE HOLDER W/4FL, 7WC
R352	2" VALVE FLUSHING LIQUOR OVERFLOW TO SUMP W/3FL, 16WC & 4SC
R446	(2) 3" FL FLUSHING LIQUOR (2) 4" FL FLUSHING LIQUOR (BETWEE
R447	2" VALVE FLUSHING LIQUOR (2) 2" FL FLUSHING LIQUOR 2SC (BETW
R116A	6"VALVES, 4FL & 8WC OVERFLOW FROM WASH OIL DECANTER TO PUMPI
R142A	8" VALVES WASH OIL LINE @ WILPUTTE DECANTER W/4FL & 7WC
R143A	8" VALVES WASH OIL LINE @ WILPUTTE DECANTER W/ 4FL & 7WC
R351A	3" VALVES LIQUOR LINE NEAR LITTLE HOLDER W/4FL, 7WC & 4SC
R351B	1" VALVES LIQUOR LINE NEAR LITTLE HOLDER W/4FL, 7WC & 4SC
BLK147P	VALVE LIGHT OIL VAPOR COOLER AT HANDRAIL
BLK155a	14" VALVES HEAT EXCHANGER W/5FL, 16WC & 4SC

36	Total Component Count
2.40%	% DTM

TABLE 8. SUMMARY OF ABC COKE UTM COMPONENTS

TAG NUMBER	LOCATION DESCRIPTION	REASON COMPONENT DEEMED UTM	MONITORING PLAN FOR SAFE TO MONITOR TIMES
B10	3" & (2) 2" VALVES & EXPANSION JOINT GAS LINE @ SATURATOR W/		
B11	3" VALVES & EXPANSION JOINT GAS LINE @ PRIMARY COOLERS W		
B12	GAS LINE EXPANSION JOINT @ PRIMARY COOLERS W/2FL & 4WC		
B13	GAS LINE @ WILPUTTE W/12WC		
B14	GAS LINE @ WILPUTTE W/8WC		
B15	GAS LINE WILPUTTE SUCTION MAIN W/5FL & 21WC		
B17	CUTOFF V WILPUTTE NORTH CROSSOVER MAIN W/5FL & 12WC		
B19	CUTOFF V WILPUTTE SOUTH CROSSOVER MAIN W/5FL & 12WC		
B10a	2" VALVES & EXPANSION JOINT GAS LINE @ SATURATOR W/5FL, 13W		
B10b	2" VALVES & EXPANSION JOINT GAS LINE @ SATURATOR W/5FL, 13W		
B11a	3" VALVES & EXPANSION JOINT GAS LINE @ PRIMARY COOLERS W/6FL		
B130	42" VALVE GAS LINE FROM SATURATOR TO STILL W/3FL & 14WC		

APPENDIX D – WEEKLY PUMP AVO INSPECTION FORM

ABC Coke Byproduct Unit
Weekly Pump AVOs

Tag #	Description	Photo #	ACCESS	Frequency	Check if AVO leak found*	Check if OK	Notes
R45	PROCESS WATER PUMP @ PROCESS WATER DECANTER	9	PMP	Weekly			
R46	PROCESS WATER PUMP @ PROCESS WATER DECANTER	9	PMP	Weekly			
R54	PUMP @ PROCESS WATER COOLING TOWER	10	PMP	Weekly			
R59	PUMP @ PROCESS WATER COOLING TOWER	10	PMP	Weekly			
R83	NORTH WASH OIL PUMPING TANK PUMP	13	PMP	Weekly			
R88	SOUTH WASH OIL PUMPING TANK PUMP	13 & 54	PMP	Weekly			
R106	BECKERS WASH OIL DECANTER PUMP	16	PMP	Weekly			
R117	TAR LOADING PUMP WEST	40	PMP	Weekly			
R184	WASH OIL PUMP @ SCRUBBERS	72	PMP	Weekly			
R194	WASH OIL PUMP TO L.O. STILL @ EAST SCRUBBER	55 & 52	PMP	Weekly			
R204	NORTH LIGHT OIL STILL PUMP	18	PMP	Weekly			
R206	SOUTH LIGHT OIL STILL PUMP	18	PMP	Weekly			
R213	DIRTY WATER TRANSFER BASIN PUMP	115	PMP	Weekly			
R214	PORTABLE DITCH PUMP @ PURIFIER	115	PMP	Weekly			
R215	PORTABLE DITCH PUMP @ SCRUBBERS	116	PMP	Weekly			
R216	PRIMARY COOLER CIRCULATION PUMP (STEAM)	30 & 31	PMP	Weekly			
R217	PRIMARY COOLER CIRCULATION PUMP (ELECTRIC)	30 & 31	PMP	Weekly			
R218	PRIMARY COOLER RE-SPRAY PUMP (NORTH)	30 & 79	PMP	Weekly			
R219	PRIMARY COOLER RE-SPRAY PUMP (SOUTH)	30 & 79	PMP	Weekly			
R220	PRIMARY COOLER SUMP PUMP (WEST)	71	PMP	Weekly			
R221	PRIMARY COOLER SUMP PUMP (EAST)	71	PMP	Weekly			
R222	DITCH PUMP @ FLUSHING LIQUOR	27 & 64	PMP	Weekly			
R223	FLUSHING LIQUOR PUMP (EAST)	27 & 64	PMP	Weekly			
R224	FLUSHING LIQUOR PUMP (MIDDLE)	27	PMP	Weekly			
R225	FLUSHING LIQUOR PUMP (WEST)	27	PMP	Weekly			
R226	TAR TRANSFER PUMP (EAST)	43 & 60	PMP	Weekly			
R227	TAR TRANSFER PUMP (WEST)	43 & 60	PMP	Weekly			
R374	EAST TAR LOADING PUMP	40	PMP	Weekly			
R386	TAR TO FINAL COOLER PUMP (WEST)	40	PMP	Weekly			
R389	TAR TO FINAL COOLER PUMP (EAST)	40	PMP	Weekly			
R416	T-101 EXCESS LIQUOR STORAGE TANK PUMPS (EAST)	101	PMP	Weekly			
R422	T-101 EXCESS LIQUOR STORAGE TANK PUMP (WEST) (EXCESS LIQUOR	101	PMP	Weekly			
R429	T-101 EXCESS LIQUOR STORAGE TANK TAR PUMP	100	PMP	Weekly			
R458	TAR DIKE SUBMERSIBLE PUMP	39	PMP	Weekly			
R461	TAR SEPARATOR SUMP PUMP	106	PMP	Weekly			
BLK25	LIGHT OIL LOADING PUMP	6	PMP	Weekly			
BLK58	LIGHT OIL INJECTION PUMP	8	PMP	Weekly			
BLK75	PUMP @ FINAL COOLER BOTTOM	42	PMP	Weekly			
BLK79	PUMP @ FINAL COOLER BOTTOM	42	PMP	Weekly			
BLK188	TRANSFER BASIN PUMP W/1FL, 3WC & 1SC	12	PMP	Weekly			
BLK193	SPARE TRANSFER PUMP	12	PMP	Weekly			
BLK230	NORTH REFLUX PUMP	89	PMP	Weekly			
BLK235	SOUTH REFLUX PUMP	89	PMP	Weekly			
BLK305	PVRV PRIMARY COOLER SUMP W/2FL & 9WC	71	PMP	Weekly			

43 TOTAL TAGS IN UNIT RECOVERY OF COKE FURNACE GASES

* Any noted leaks must be reparied within the 5/15 day time frames.

Name: _____

Date: _____

APPENDIX E – LDAR LEAK REPAIR DECISION TREE

LDAR Leak Repair Decision Tree

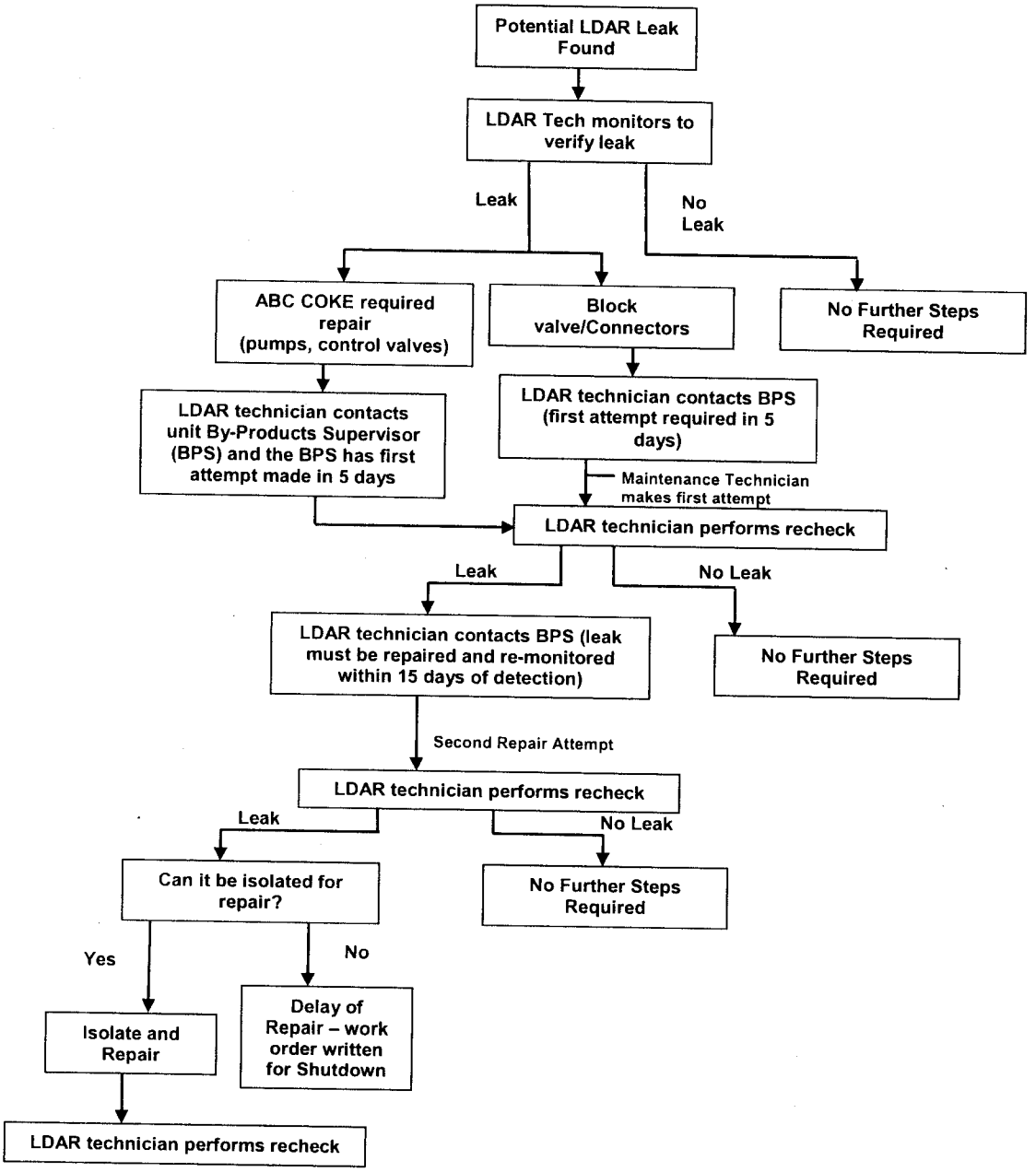

APPENDIX F – DOR AUTHORIZATION FORM

DOR Authorization Form

DELAY OF REPAIR (DOR) AUTHORIZATION BY-PRODUCTS

This Form Must Be Completed For All Leaks That Cannot Be Repaired Within 15 Days

Work Order Number:_____ Initial Monitoring Date:_____

Expected Date of Repair:_____ Date Remonitored After Repair:_____

Technician:_____ Monitoring Instrument:_____

Component Information:

Tag Number:_____ Service: V LL G HL_____

Type Component:_____ Leak Location:_____

Leak Rate:_____ Component Location:_____

P&ID #:_____ Line#:_____ Section:_____

AVO Leak Extraordinary Repair Closed Vent System Monitoring Leak

Criteria for Delay of Repair (check each box that applies):

☐ **USD** Repair is technically unfeasible until process unit shutdown. In this instance, repair will occur by end of the next process unit shutdown.
Explain:_____

☐ **ISO** Equipment is isolated from service and does not remain in VOC service. (Drained, Flushed and Blinded).

☐ **DMS** Repair of a pump requires replacing existing seal design with a dual mechanical seal system, a new system with better performance, or a closed vent system and control device. Repair must be completed within 6 months of leak detection.

☐ **GE** The emissions from material purged from immediate repair are greater than the emission likely to result from delay (**these calculations to be performed by the Third-Party LDAR Coordinator and approved by the Environmental Coordinator**). This only applies to valves, connectors, & agitators.

☐ **SD** If during a unit shut down, a valve assembly replacement is necessary but supplies are depleted. The supplies must have been stocked to normal quantities prior to shut down for this exception to be viable.

Other/Explain:_____

_____

The Above Component Cannot be Repaired Within the Required Time Limit.

By-Products Supervisor or Designee (Print):_____

By-Products Supervisor or Designee (Signature): _____Date:_____

Comments:_____

APPENDIX G – LDAR MOC TRACKING FORM

LDAR Management of Change Tracking Form

LDAR MOC No.	**1**	**Revision:**	**0**	**Priority:**	**1**

Date and Time of MOC Initiation:	
Printed Name of Individual Initiating MOC:	
Signature of Individual Initiating MOC:	

Brief Narrative explaining the nature of the change including current equipment configuration and the proposed. Include equipment specifications, all pertinent details, etc.:

Attach a Revised Notated Photo Library page per LDAR Procedure 1.2		Initial here:

Date and Time of BPS Receipt of MOC:	
Comments/Concerns regarding approval or disapproval of MOC from BPS:	
Printed Name of BPS reviewing MOC:	
MOC BPS Approval Signature, Date and Time:	
Date and Time of Engineering Receipt of MOC:	
Comments/Concerns regarding approval or disapproval of MOC from Engineering:	
Printed Name of Engineering Department review of MOC:	
MOC Engineering Approval Signature, Date and Time:	
Date and Time of 3rd Party LDAR Coordinator Receipt of MOC:	
Comments/Concerns regarding approval or disapproval of MOC from 3rd Party LDAR Coodinator:	
Printed Name of LDAR Coordinator review of MOC:	
MOC LDAR Coordinator Approval Signature, Date and Time:	
Date and Time of Env Coordinator Receipt of MOC:	
Comments/Concerns regarding approval or disapproval of MOC from Environmental Coodinator:	
Printed Name of Environmental Coordinator review of MOC:	
MOC Env Coordinator Approval Signature, Date and Time:	

BPS FINAL APPROVAL:

Signature **Date**

Photo Log Update Verification:

3rd Party LDAR Coordinator **Signature** **Date**

APPENDIX H – AUDIT FRAMEWORK

Proposed Framework for an Audit Program for Leak Detection and Repair

This document lays out the structure of an audit program for LDAR activities. The audit program is part of an overall quality assurance program that includes internal audits, external audits, inspector training, and refresher training. This document discusses the content of the internal and external audits.

The audit program is proposed to include the following elements:

- Observation of inspector technique during calibration and monitoring;
- Comparative monitoring performance audit;
- Review of record keeping and data management;
- Review of repair completion issues;
- Review of tagging issues; and
- Review of other issues.

The external audits will be done by a third-party LDAR contractor (not normally assigned to the ABC Coke site to reduce potential bias) and should take one day or less. An internal auditor may supplement the external auditors if ABC Coke chooses. The audits would begin with an orientation meeting to introduce the auditors to the people involved in LDAR program. The audit team(s) will organize observations, findings, and recommendations for improvement. The audit findings will be presented at an exit meeting and in a written summary. In addition, the Third Party LDAR Coordinator will circulate a copy of the findings and lessons learned to all pertinent ABC Coke personnel.

Each element of the annual audit is described briefly below.

Observation of Inspector Technique

The auditor will pair up with an inspector to observe the calibration and monitoring techniques. This type of audit is useful for finding misconceptions about the appropriate Method 21 techniques. While in the field, auditors will also observe technique on the various component types (compressors, pumps, pressure relief valves, etc.). Findings from this type of audit will be added to the training programs to correct any misconceptions.

Comparative Monitoring

Comparative monitoring means that the auditor will bring his/her own monitoring instrument (and if feasible, calibration gases) and make measurements independent of the routine site LDAR inspectors. The auditors will randomly pick subsets of components to audit. The leak frequency determined by the auditor will be compared to the historical leak frequencies reported by the site LDAR crew for that unit over the last few monitoring periods. Leak frequencies can vary a bit between monitoring periods, but it is indicative of a problem if the auditor finds significantly more leakers than the historical data would indicate.

The selection of components to be audited will be done by categories. The historical leak frequency data will be used to order the by-products unit from highest to lowest. The by-products unit will then be divided into 2 categories based on leak frequency: upper half and lower half. The auditors will select about twice as many processes from the upper half (with higher leak frequencies) as from the lower half for monitoring. Records will be kept on which components are audited, and no components will be checked again until all have been monitored in an audit. This assures that all processes will be audited, and that the areas of higher leak frequency are given more attention.

The auditors will monitor at least a minimum number of components to achieve statistical confidence that the results for the subset give a reasonable representation of the results for the whole process. The minimum numbers of components will vary as a function of historical leak frequency. The lower the historical leak frequency, the higher the minimum numbers of components must be monitored to achieve statistical confidence. The table below provides some rough guidelines for minimum numbers to be monitored by component type and historical leak frequency:

Table 1. Minimum Sample Size for Comparative Monitoring

Component Type	Historical Leak Frequency		
	<= 1%	>1% but <=3%	>3%
	Minimum Number to Monitor for Comparison Monitoring		
Valves & Connectors (Gas & Light Liquid)	1000	500	250
Pump seals (Light Liquid)	Monitor all		

In the event the by-products unit has fewer valves than the suggested minimum, the audit crew would monitor them all.

The auditors must also consider how to select the components they are to monitor. One approach is to calculate what percentage of components the minimum sample would be. For instance, if the by-products unit has <1% leak frequency and has about 2,000 valves in gas or light liquid service, the minimum sample would be about 50% of the total valves. A good way to semi-randomly select a 50% subset is to pick a stream in gas or light liquid service and monitor the first valve, skip the second, monitor the third, etc. It would also be acceptable to simply monitor 25 to 50 components on a

selected stream, then switch to another stream and monitor 25 to 50 components, and so on until reaching the target number of components. While this approach is not quite as random as the former, it is easier to keep track of in the field and should not generate any significant problems so long as the auditors are cautioned to include a representative sampling of all types of streams in the process.

The auditors (and the regular LDAR staff) will be trained in effective use of monitoring time. Components with preliminary monitoring values that are less than 20% of the leak definition, or more than the leak definition, can be monitored in a very short period of time. Only that small fraction of components (typically much less than 1%) that show a preliminary monitoring value between 20% and 99% of the leak definition need extra attention to be sure that they are not leakers. Components of this type that show steady monitoring values over a period of a minute or two can be recorded at that time. Components that exhibit a highly variable monitoring value should be checked for periods of up to 5 minutes (assuming it has not exceeded the leak definition earlier). This approach of allowing extra time on the few components that are under, but near, the leak definition will allow the audit crew to develop results similar to what an EPA multimedia audit team would show.

The results of the comparative monitoring can highlight problem areas. This type of test is good at identifying problems related to careless monitoring (i.e. the inspector knows how to do Method 21 properly, but loses the patience to carry it out strictly during the times between audits). Issues discovered in comparison monitoring can be added to training programs.

Review of Record Keeping and Data Management

Record review is a standard component of any LDAR audit and is a good check on many regulatory compliance issues. The auditors should focus on whether the appropriate records are kept and whether the contents make sense. Examples are copies of daily calibration sheets, quarterly instrument performance certifications, monitoring data, repair logs, etc.

Review of Repair Completion

The audit should check that leakers identified through monitoring are receiving timely first attempts at repair and that the repair is completed within the allowed time (15 days). For those instances when repair completion within the allowed time is not possible, check to see that a delay of repair record has been initiated with the reason for the delay and an authorization. Also check to see that there is a management system to be sure that delayed repairs are completed during the next unit shutdown, or document why they were not. The audit should look for systemic problems in communications between the LDAR team, maintenance, and environmental staff.

Review of Tagging Issues

There are a number of issues related to tagging components to be audited. One of the most basic is whether the appropriate components have been tagged and/or whether components that are not covered by the regulations have been incorrectly tagged. The auditors will be looking for tagging problems as they do the observation and comparison monitoring. The auditors should also determine how the site handles missing tags and how they keep the database history intact when missing tags are replaced. The auditors should also check for how the LDAR team tracks components added to or removed from the units and how this type of information is transmitted to the LDAR team.

Review of Other Issues

There are a variety of other issues that should be considered by the auditors. The manner in which difficult-to-monitor and unsafe-to-monitor components are designated and the plan for monitoring them is one such issue. Inspector safety is another issue, since monitoring requires climbing with equipment, exposure to hot surfaces, etc. The guidelines for designating difficult-to-monitor and unsafe-to-monitor components need to meet regulatory requirements, but also be consistent with the site safety rules. Instrument reliability and routine maintenance are other good issues. How does the LDAR team cope with rain or very cold weather? There may be other site-specific or regulation-specific issues that apply to any given site.

APPENDIX I – OEL TAGS

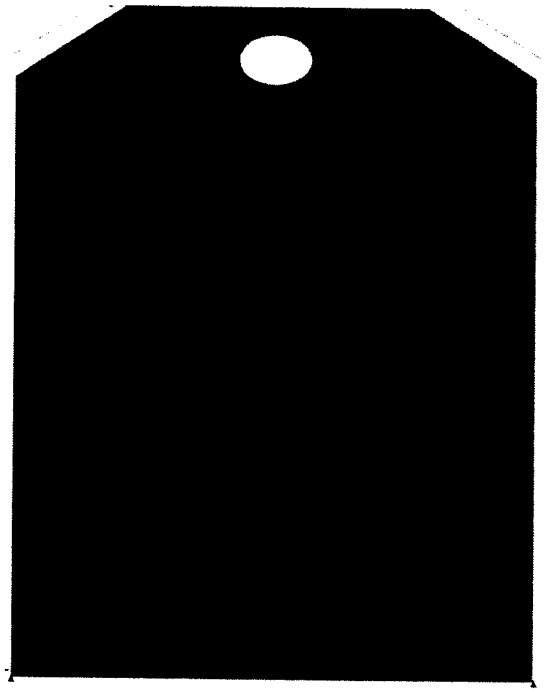

Pink OEL Tag

BLANK PAGE

ABC Coke

Leaking Equipment for the Time Period From 01/01/2017 through 08/07/2018

UNIT: RECOVERY OF COKE FURNACE GASES

EQUIPMENT

TAG NO.: R54 **LINE #:** U **LOCATION:** PUMP @ PROCESS WATER COOLING TOWER **CVS:** No

ACCESS: Accessible **EQUIP:** Pump **GROUP:** 40 CFR 61 Subpart L **SIZE:** 0.000

SERVICE: Light Liquid **CONFIG:** Standard Service **PRODUCT:** UNCLASSIFIED **LEVEL:** 04

COMMENT: **P & ID :** U **UNDER 300 HRS:** No

INSPECTION

DATE READ: 07/30/2018 08:11:41 **READING:** 646.00 **AVO LEAK:** NO **LEAK LIMIT:** 500

TECHNICIAN: Matt Case **BACKGROUND:** 19.18 **INSTRUMENT:** 73272

ATTEMPT DUE DATES

ATTEMPT: **1ST ATTEMPT**

DATE DUE: 08/04/2018

COMPLETED: 07/30/2018

REPAIR DUE DATES

LEAK LIMIT: **500**

DATE DUE: 08/14/2018

COMPLETED: 07/30/2018

REPAIR STATUS

DATE REPAIRED: 07/30/2018 **EST. REPAIR DATE:** **ISOLATED FROM SVC:** **RETURNED TO SVC:**

PLACED ON DELAY: **AUTHORIZED BY:** **YRS ON DELAY:** **WARRANTY EXPIRY:**

REASON: **WORK ORDER #:**

EXTRAORDINARY ATT ALLOWED: Yes

COMMENT: **CLOSE AUTH BY:**

REPAIR ATTEMPTS

EMISSION POINT: Pump Seal

ATTEMPT DATE	REPAIR METHOD	MATERIAL USED	REMON DATE	BKGD	READING	AVO	TECHNICIAN	INSTRUMENT	TECH MADE ATT	EX ATT
07/30/18 09:41:38	Tighten Seal		07/30/18 09:43:22	3.40	5.23	NO	Matt Case	73272	No	No

ABC Coke

Leaking Equipment for the Time Period From 01/01/2017 through 08/07/2018

UNIT: RECOVERY OF COKE FURNACE GASES

EQUIPMENT

TAG NO.: R59 **LINE #:** U **LOCATION:** PUMP @ PROCESS WATER COOLING TOWER **CVS:** No

ACCESS: Accessible **EQUIP:** Pump **GROUP:** 40 CFR 61 Subpart L **SIZE:** 0.000

SERVICE: Light Liquid **CONFIG:** Standard Service **PRODUCT:** UNCLASSIFIED **LEVEL:** 04

COMMENT: **P & ID :** U **UNDER 300 HRS:** No

INSPECTION

DATE READ: 05/24/2017 10:13:58 **READING:** 891.00 **AVO LEAK:** NO **LEAK LIMIT:** 500

TECHNICIAN: Matt Case **BACKGROUND:** 5.00 **INSTRUMENT:** 9262

ATTEMPT DUE DATES

ATTEMPT: 1ST ATTEMPT

DATE DUE:

COMPLETED: 05/26/2017

REPAIR DUE DATES

LEAK LIMIT: 500

DATE DUE: 06/08/2017

COMPLETED: 05/26/2017

REPAIR STATUS

DATE REPAIRED: 05/26/2017 **EST. REPAIR DATE:** **ISOLATED FROM SVC:** **RETURNED TO SVC:**

PLACED ON DELAY: **AUTHORIZED BY:** **YRS ON DELAY:** **WARRANTY EXPIRY:**

REASON: **WORK ORDER #:**

EXTRAORDINARY ATT ALLOWED: Yes

COMMENT: **CLOSE AUTH BY:**

REPAIR ATTEMPTS

EMISSION POINT: Pump Seal

ATTEMPT DATE	REPAIR METHOD	MATERIAL USED	REMON DATE	BKGD	READING	AVO	TECHNICIAN	INSTRUMENT	TECH MADE ATT	EX ATT
05/26/17 09:42:51	Replace Seal		05/26/17 09:43:44	3.00	18.00	NO	Matt Case	9262	No	No

ABC Coke

Leaking Equipment for the Time Period From 01/01/2017 through 08/07/2018

UNIT: RECOVERY OF COKE FURNACE GASES

EQUIPMENT

TAG NO.: R59 **LINE #:** U **LOCATION:** PUMP @ PROCESS WATER COOLING TOWER **CVS:** No

ACCESS: Accessible **EQUIP:** Pump **GROUP:** 40 CFR 61 Subpart L **SIZE:** 0.000

SERVICE: Light Liquid **CONFIG:** Standard Service **PRODUCT:** UNCLASSIFIED **LEVEL:** 04

COMMENT: **P & ID :** U **UNDER 300 HRS:** No

INSPECTION

DATE READ: 12/12/2017 09:27:18 **READING:** 1,984.00 **AVO LEAK:** NO **LEAK LIMIT:** 500

TECHNICIAN: Matt Case **BACKGROUND:** 1.82 **INSTRUMENT:** 9269

ATTEMPT DUE DATES

ATTEMPT: 1ST ATTEMPT

DATE DUE:

COMPLETED: 12/12/2017

REPAIR DUE DATES

LEAK LIMIT: 500

DATE DUE: 12/27/2017

COMPLETED: 12/12/2017

REPAIR STATUS

DATE REPAIRED: 12/12/2017 **EST. REPAIR DATE:** **ISOLATED FROM SVC:** **RETURNED TO SVC:**

PLACED ON DELAY: **AUTHORIZED BY:** **YRS ON DELAY:** **WARRANTY EXPIRY:**

REASON: **WORK ORDER #:**

EXTRAORDINARY ATT ALLOWED: Yes

COMMENT: **CLOSE AUTH BY:**

REPAIR ATTEMPTS

EMISSION POINT: Pump Seal

ATTEMPT DATE	REPAIR METHOD	MATERIAL USED	REMON DATE	BKGD	READING	AVO	TECHNICIAN	INSTRUMENT	TECH MADE ATT	EX ATT
12/12/17 10:30:32	Tighten Seal		12/12/17 10:42:38	5.78	82.06	NO	Matt Case	9269	No	No

ABC Coke

Leaking Equipment for the Time Period From 01/01/2017 through 08/07/2018

UNIT: RECOVERY OF COKE FURNACE GASES

EQUIPMENT

TAG NO.: R59 **LINE #:** U **LOCATION:** PUMP @ PROCESS WATER COOLING TOWER **CVS:** No

ACCESS: Accessible **EQUIP:** Pump **GROUP:** 40 CFR 61 Subpart L **SIZE:** 0.000

SERVICE: Light Liquid **CONFIG:** Standard Service **PRODUCT:** UNCLASSIFIED **LEVEL:** 04

COMMENT: **P & ID :** U **UNDER 300 HRS:** No

INSPECTION

DATE READ: 01/23/2018 09:18:51 **READING:** 617.00 **AVO LEAK:** NO **LEAK LIMIT:** 500

TECHNICIAN: Brent Birdwell **BACKGROUND:** 13.34 **INSTRUMENT:** 9269

ATTEMPT DUE DATES

ATTEMPT: 1ST ATTEMPT

DATE DUE: 01/28/2018

COMPLETED: 01/23/2018

REPAIR DUE DATES

LEAK LIMIT: 500

DATE DUE: 02/07/2018

COMPLETED: 01/23/2018

REPAIR STATUS

DATE REPAIRED: 01/23/2018 **EST. REPAIR DATE:** **ISOLATED FROM SVC:** **RETURNED TO SVC:**

PLACED ON DELAY: **AUTHORIZED BY:** **YRS ON DELAY:** **WARRANTY EXPIRY:**

REASON: **WORK ORDER #:**

EXTRAORDINARY ATT ALLOWED: Yes

COMMENT: **CLOSE AUTH BY:**

REPAIR ATTEMPTS

EMISSION POINT: Pump Seal

ATTEMPT DATE	REPAIR METHOD	MATERIAL USED	REMON DATE	BKGD	READING	AVO	TECHNICIAN	INSTRUMENT	TECH MADE ATT	EX ATT
01/23/18 10:49:31	Tighten Seal		01/23/18 10:55:37	6.82	142.00	NO	Brent Birdwell	9269	No	No

EQUIPMENT

TAG NO.: R59 **LINE #:** U **LOCATION:** PUMP @ PROCESS WATER COOLING TOWER **CVS:** No
ACCESS: Accessible **EQUIP:** Pump **GROUP:** 40 CFR 61 Subpart L **SIZE:** 0.000
SERVICE: Light Liquid **CONFIG:** Standard Service **PRODUCT:** UNCLASSIFIED **LEVEL:** 04
COMMENT: **P & ID :** U **UNDER 300 HRS:** No

INSPECTION

DATE READ: 02/15/2018 08:52:52 **READING:** 1.259.00 **AVO LEAK:** NO **LEAK LIMIT:** 500
TECHNICIAN: Andrew Ficher **BACKGROUND:** 42.92 **INSTRUMENT:** 70803

ATTEMPT DUE DATES

ATTEMPT: 1ST ATTEMPT
DATE DUE: 02/20/2018
COMPLETED: 02/15/2018

REPAIR DUE DATES

LEAK LIMIT: 500
DATE DUE: 03/02/2018
COMPLETED: 02/15/2018

REPAIR STATUS

DATE REPAIRED: 02/15/2018 **EST. REPAIR DATE:** **ISOLATED FROM SVC:** **RETURNED TO SVC:**
PLACED ON DELAY: **AUTHORIZED BY:** **YRS ON DELAY:** **WARRANTY EXPIRY:**
REASON: **WORK ORDER #:**
EXTRAORDINARY ATT ALLOWED: Yes
COMMENT: **CLOSE AUTH BY:**

REPAIR ATTEMPTS

EMISSION POINT: Pump Seal

ATTEMPT DATE	REPAIR METHOD	MATERIAL USED	REMON DATE	BKGD	READING	AVO	TECHNICIAN	INSTRUMENT	TECH MADE ATT	EX ATT
02/15/18 09:11:05	Tighten Seal		02/15/18 09:12:00	25.65	2,114.00	NO	Andrew Ficher	70803	No	No
02/15/18 11:49:46	Tighten Seal		02/15/18 11:50:38	15.69	88.76	NO	Andrew Ficher	70803	No	No

ABC Coke

Leaking Equipment for the Time Period From 01/01/2017 through 08/07/2018

UNIT: RECOVERY OF COKE FURNACE GASES

EQUIPMENT

TAG NO.: R83 **LINE #:** U **LOCATION:** NORTH WASH OIL PUMPING TANK PUMP **CVS:** No

ACCESS: Accessible **EQUIP:** Pump **GROUP:** 40 CFR 61 Subpart L **SIZE:** 0.000

SERVICE: Light Liquid **CONFIG:** Standard Service **PRODUCT:** UNCLASSIFIED **LEVEL:** 02

COMMENT: **P & ID :** U **UNDER 300 HRS:** No

INSPECTION

DATE READ: 12/12/2017 09:37:13 **READING:** 639.00 **AVO LEAK:** NO **LEAK LIMIT:** 500

TECHNICIAN: Matt Case **BACKGROUND:** 17.57 **INSTRUMENT:** 9269

ATTEMPT DUE DATES

ATTEMPT: **1ST ATTEMPT**

DATE DUE:

COMPLETED: 12/12/2017

REPAIR DUE DATES

LEAK LIMIT: **500**

DATE DUE: 12/27/2017

COMPLETED: 12/12/2017

REPAIR STATUS

DATE REPAIRED: 12/12/2017 **EST. REPAIR DATE:** **ISOLATED FROM SVC:** **RETURNED TO SVC:**

PLACED ON DELAY: **AUTHORIZED BY:** **YRS ON DELAY:** **WARRANTY EXPIRY:**

REASON: **WORK ORDER #:**

EXTRAORDINARY ATT ALLOWED: Yes

COMMENT: **CLOSE AUTH BY:**

REPAIR ATTEMPTS

EMISSION POINT: Pump Seal

ATTEMPT DATE	REPAIR METHOD	MATERIAL USED	REMON DATE	BKGD	READING	AVO	TECHNICIAN	INSTRUMENT	TECH MADE ATT	EX ATT
12/12/17 10:27:50	Tighten Seal		12/12/17 10:29:52	8.40	8.42	NO	Matt Case	9269	No	No

EQUIPMENT

TAG NO.: R83 **LINE #:** U **LOCATION:** NORTH WASH OIL PUMPING TANK PUMP **CVS:** No
ACCESS: Accessible **EQUIP:** Pump **GROUP:** 40 CFR 61 Subpart L **SIZE:** 0.000
SERVICE: Light Liquid **CONFIG:** Standard Service **PRODUCT:** UNCLASSIFIED **LEVEL:** 02
COMMENT: **P & ID :** U **UNDER 300 HRS:** No

INSPECTION

DATE READ: 07/30/2018 08:16:01 **READING:** 1,393.00 **AVO LEAK:** NO **LEAK LIMIT:** 500
TECHNICIAN: Matt Case **BACKGROUND:** 74.37 **INSTRUMENT:** 73272

ATTEMPT DUE DATES

ATTEMPT: 1ST ATTEMPT
DATE DUE: 08/04/2018
COMPLETED: 07/30/2018

REPAIR DUE DATES

LEAK LIMIT: 500
DATE DUE: 08/14/2018
COMPLETED: 07/30/2018

REPAIR STATUS

DATE REPAIRED: 07/30/2018 **EST. REPAIR DATE:** **ISOLATED FROM SVC:** **RETURNED TO SVC:**
PLACED ON DELAY: **AUTHORIZED BY:** **YRS ON DELAY:** **WARRANTY EXPIRY:**
REASON: **WORK ORDER #:**
EXTRAORDINARY ATT ALLOWED: Yes
COMMENT: **CLOSE AUTH BY:**

REPAIR ATTEMPTS

EMISSION POINT: Pump Seal

ATTEMPT DATE	REPAIR METHOD	MATERIAL USED	REMON DATE	BKGD	READING	AVO	TECHNICIAN	INSTRUMENT	TECH MADE ATT	EX ATT
07/30/18 09:39:36	Tighten Seal		07/30/18 09:41:02	3.90	145.00	NO	Matt Case	73272	No	No

ABC Coke

Leaking Equipment for the Time Period From 01/01/2017 through 08/07/2018

UNIT: RECOVERY OF COKE FURNACE GASES

EQUIPMENT

TAG NO.: R204 **LINE #:** U **LOCATION:** NORTH LIGHT OIL STILL PUMP **CVS:** No

ACCESS: Accessible **EQUIP:** Pump **GROUP:** 40 CFR 61 Subpart L **SIZE:** 0.000

SERVICE: Light Liquid **CONFIG:** Standard Service **PRODUCT:** UNCLASSIFIED **LEVEL:** 03

COMMENT: **P & ID :** U **UNDER 300 HRS:** No

INSPECTION

DATE READ: 07/30/2018 08:39:41 **READING:** 1 611.00 **AVO LEAK:** NO **LEAK LIMIT:** 500

TECHNICIAN: Matt Case **BACKGROUND:** 28.31 **INSTRUMENT:** 73272

ATTEMPT DUE DATES

ATTEMPT: 1ST ATTEMPT

DATE DUE: 08/04/2018

COMPLETED: 07/31/2018

REPAIR DUE DATES

LEAK LIMIT: 500

DATE DUE: 08/14/2018

COMPLETED: 07/31/2018

REPAIR STATUS

DATE REPAIRED: 07/31/2018 **EST. REPAIR DATE:** **ISOLATED FROM SVC:** **RETURNED TO SVC:**

PLACED ON DELAY: **AUTHORIZED BY:** **YRS ON DELAY:** **WARRANTY EXPIRY:**

REASON: **WORK ORDER #:**

EXTRAORDINARY ATT ALLOWED: Yes

COMMENT: **CLOSE AUTH BY:**

REPAIR ATTEMPTS

EMISSION POINT: Pump Seal

ATTEMPT DATE	REPAIR METHOD	MATERIAL USED	REMON DATE	BKGD	READING	AVO	TECHNICIAN	INSTRUMENT	TECH MADE ATT	EX ATT
07/31/18 11:57:56	Replace Seal		07/31/18 11:59:23	14.94	25.58	NO	Matt Case	73272	No	No

EQUIPMENT

TAG NO.: R206 **LINE #:** U **LOCATION:** SOUTH LIGHT OIL STILL PUMP **CVS:** No
ACCESS: Accessible **EQUIP:** Pump **GROUP:** 40 CFR 61 Subpart L **SIZE:** 0.000
SERVICE: Light Liquid **CONFIG:** Standard Service **PRODUCT:** UNCLASSIFIED **LEVEL:** 03
COMMENT: **P & ID :** U **UNDER 300 HRS:** No

INSPECTION

DATE READ: 11/14/2017 09:58:17 **READING:** 2,814.00 **AVO LEAK:** NO **LEAK LIMIT:** 500
TECHNICIAN: Matt Case **BACKGROUND:** 1.03 **INSTRUMENT:** 9269

ATTEMPT DUE DATES

ATTEMPT: 1ST ATTEMPT
DATE DUE:
COMPLETED: 11/14/2017

REPAIR DUE DATES

LEAK LIMIT: 500
DATE DUE: 11/29/2017
COMPLETED: 11/14/2017

REPAIR STATUS

DATE REPAIRED: 11/14/2017 **EST. REPAIR DATE:** **ISOLATED FROM SVC:** **RETURNED TO SVC:**
PLACED ON DELAY: **AUTHORIZED BY:** **YRS ON DELAY:** **WARRANTY EXPIRY:**
REASON: **WORK ORDER #:**
EXTRAORDINARY ATT ALLOWED: Yes
COMMENT: **CLOSE AUTH BY:**

REPAIR ATTEMPTS

EMISSION POINT: Pump Seal

ATTEMPT DATE	REPAIR METHOD	MATERIAL USED	REMON DATE	BKGD	READING	AVO	TECHNICIAN	INSTRUMENT	TECH MADE ATT	EX ATT
11/14/17 12:57:03	Replace Seal		11/14/17 13:17:50	2.75	5.41	NO	Matt Case	9269	No	No

ABC Coke

Leaking Equipment for the Time Period From 01/01/2017 through 08/07/2018

UNIT: RECOVERY OF COKE FURNACE GASES

EQUIPMENT

TAG NO.: R213 **LINE #:** U **LOCATION:** DIRTY WATER TRANSFER BASIN PUMP **CVS:** No

ACCESS: Accessible **EQUIP:** Pump **GROUP:** 40 CFR 61 Subpart L **SIZE:** 0.000

SERVICE: Light Liquid **CONFIG:** Standard Service **PRODUCT:** UNCLASSIFIED **LEVEL:** 01

COMMENT: **P & ID :** U **UNDER 300 HRS:** No

INSPECTION

DATE READ: 05/24/2017 11:07:40 **READING:** 100,000.00 **AVO LEAK:** NO **LEAK LIMIT:** 500

TECHNICIAN: Matt Case **BACKGROUND:** 9.00 **INSTRUMENT:** 9262

ATTEMPT DUE DATES

ATTEMPT:	**1ST ATTEMPT**
DATE DUE:	05/29/2017
COMPLETED:	05/26/2017

REPAIR DUE DATES

LEAK LIMIT:	**500**	**10000**
DATE DUE:	06/08/2017	06/08/2017
COMPLETED:	05/26/2017	05/26/2017

REPAIR STATUS

DATE REPAIRED: 05/26/2017 **EST. REPAIR DATE:** **ISOLATED FROM SVC:** **RETURNED TO SVC:**

PLACED ON DELAY: **AUTHORIZED BY:** **YRS ON DELAY:** **WARRANTY EXPIRY:**

REASON: **WORK ORDER #:**

EXTRAORDINARY ATT ALLOWED: Yes

COMMENT: **CLOSE AUTH BY:**

REPAIR ATTEMPTS

EMISSION POINT: Pump Seal

ATTEMPT DATE	REPAIR METHOD	MATERIAL USED	REMON DATE	BKGD	READING	AVO	TECHNICIAN	INSTRUMENT	TECH MADE ATT	EX ATT
05/26/17 09:45:33	Installed Sealing Material		05/26/17 09:49:25	3.00	24.00	NO	Matt Case	9262	No	No

EQUIPMENT

TAG NO.: R213 **LINE #:** U **LOCATION:** DIRTY WATER TRANSFER BASIN PUMP **CVS:** No
ACCESS: Accessible **EQUIP:** Pump **GROUP:** 40 CFR 61 Subpart L **SIZE:** 0.000
SERVICE: Light Liquid **CONFIG:** Standard Service **PRODUCT:** UNCLASSIFIED **LEVEL:** 01
COMMENT: **P & ID :** U **UNDER 300 HRS:** No

INSPECTION

DATE READ: 08/22/2017 09:37:06 **READING:** 11.200.00 **AVO LEAK:** NO **LEAK LIMIT:** 500
TECHNICIAN: Matt Case **BACKGROUND:** 9.43 **INSTRUMENT:** 9262

ATTEMPT DUE DATES

ATTEMPT: 1ST ATTEMPT
DATE DUE: 08/27/2017
COMPLETED: 08/22/2017

REPAIR DUE DATES

LEAK LIMIT:	500	10000
DATE DUE:	09/06/2017	09/06/2017
COMPLETED:	08/22/2017	08/22/2017

REPAIR STATUS

DATE REPAIRED: 08/22/2017 **EST. REPAIR DATE:** **ISOLATED FROM SVC:** **RETURNED TO SVC:**
PLACED ON DELAY: **AUTHORIZED BY:** **YRS ON DELAY:** **WARRANTY EXPIRY:**
REASON: **WORK ORDER #:**
EXTRAORDINARY ATT ALLOWED: Yes
COMMENT: **CLOSE AUTH BY:**

REPAIR ATTEMPTS

EMISSION POINT: Pump Seal

ATTEMPT DATE	REPAIR METHOD	MATERIAL USED	REMON DATE	BKGD	READING	AVO	TECHNICIAN	INSTRUMENT	TECH MADE ATT	EX ATT
08/22/17 12:04:26	Installed Sealing Material		08/22/17 12:06:57	3.42	1,271.00	NO	Matt Case	9262	No	No
08/22/17 12:56:33	Installed Sealing Material		08/22/17 13:01:41	1.49	83.13	NO	Matt Case	9262	No	No

ABC Coke

Leaking Equipment for the Time Period From 01/01/2017 through 08/07/2018

UNIT: RECOVERY OF COKE FURNACE GASES

EQUIPMENT

TAG NO.: R213 **LINE #:** U **LOCATION:** DIRTY WATER TRANSFER BASIN PUMP **CVS:** No

ACCESS: Accessible **EQUIP:** Pump **GROUP:** 40 CFR 61 Subpart L **SIZE:** 0.000

SERVICE: Light Liquid **CONFIG:** Standard Service **PRODUCT:** UNCLASSIFIED **LEVEL:** 01

COMMENT: **P & ID :** U **UNDER 300 HRS:** No

INSPECTION

DATE READ: 12/12/2017 09:49:11 **READING:** 1 348.00 **AVO LEAK:** NO **LEAK LIMIT:** 500

TECHNICIAN: Matt Case **BACKGROUND:** 40.81 **INSTRUMENT:** 9269

ATTEMPT DUE DATES

ATTEMPT: 1ST ATTEMPT

DATE DUE:

COMPLETED: 12/12/2017

REPAIR DUE DATES

LEAK LIMIT: 500

DATE DUE: 12/27/2017

COMPLETED: 12/12/2017

REPAIR STATUS

DATE REPAIRED: 12/12/2017 **EST. REPAIR DATE:** **ISOLATED FROM SVC:** **RETURNED TO SVC:**

PLACED ON DELAY: **AUTHORIZED BY:** **YRS ON DELAY:** **WARRANTY EXPIRY:**

REASON: **WORK ORDER #:**

EXTRAORDINARY ATT ALLOWED: Yes

COMMENT: **CLOSE AUTH BY:**

REPAIR ATTEMPTS

EMISSION POINT: Pump Seal

ATTEMPT DATE	REPAIR METHOD	MATERIAL USED	REMON DATE	BKGD	READING	AVO	TECHNICIAN	INSTRUMENT	TECH MADE ATT	EX ATT
12/12/17 10:50:19	Installed Sealing Material		12/12/17 10:52:51	16.67	165.00	NO	Matt Case	9269	No	No

EQUIPMENT

TAG NO.: R213 **LINE #:** U **LOCATION:** DIRTY WATER TRANSFER BASIN PUMP **CVS:** No
ACCESS: Accessible **EQUIP:** Pump **GROUP:** 40 CFR 61 Subpart L **SIZE:** 0.000
SERVICE: Light Liquid **CONFIG:** Standard Service **PRODUCT:** UNCLASSIFIED **LEVEL:** 01
COMMENT: **P & ID :** U **UNDER 300 HRS:** No

INSPECTION

DATE READ: 07/30/2018 08:42:27 **READING:** 4,731.00 **AVO LEAK:** NO **LEAK LIMIT:** 500
TECHNICIAN: Matt Case **BACKGROUND:** 13.39 **INSTRUMENT:** 73272

ATTEMPT DUE DATES

ATTEMPT: 1ST ATTEMPT
DATE DUE: 08/04/2018
COMPLETED: 07/31/2018

REPAIR DUE DATES

LEAK LIMIT: 500
DATE DUE: 08/14/2018
COMPLETED: 07/31/2018

REPAIR STATUS

DATE REPAIRED: 07/31/2018 **EST. REPAIR DATE:** **ISOLATED FROM SVC:** **RETURNED TO SVC:**
PLACED ON DELAY: **AUTHORIZED BY:** **YRS ON DELAY:** **WARRANTY EXPIRY:**
REASON: **WORK ORDER #:**
EXTRAORDINARY ATT ALLOWED: Yes
COMMENT: **CLOSE AUTH BY:**

REPAIR ATTEMPTS

EMISSION POINT: Pump Seal

ATTEMPT DATE	REPAIR METHOD	MATERIAL USED	REMON DATE	BKGD	READING	AVO	TECHNICIAN	INSTRUMENT	TECH MADE ATT	EX ATT
07/31/18 11:59:39	Installed Sealing Component		07/31/18 12:01:38	11.75	452.00	NO	Matt Case	73272	No	No

ABC Coke

Leaking Equipment for the Time Period From 01/01/2017 through 08/07/2018

UNIT: RECOVERY OF COKE FURNACE GASES

EQUIPMENT

TAG NO.: R574 **LINE #:** U **LOCATION:** 3" PIPE W/2FL, 1/2"VALVE, 4SC & 4WC **CVS:** No

ACCESS: Accessible **EQUIP:** Valve **GROUP:** 40 CFR 61 Subpart L **SIZE:** 0.500

SERVICE: Light Liquid **CONFIG:** Externally Actuated **PRODUCT:** UNCLASSIFIED **LEVEL:** 03

COMMENT: **P & ID :** U **UNDER 300 HRS:** No

INSPECTION

DATE READ: 03/23/2018 08:33:50 **READING:** 12,968.00 **AVO LEAK:** NO **LEAK LIMIT:** 500

TECHNICIAN: Brent Birdwell **BACKGROUND:** 9.42 **INSTRUMENT:** 9262

ATTEMPT DUE DATES

ATTEMPT: 1ST ATTEMPT

DATE DUE: 03/28/2018

COMPLETED: 03/23/2018

REPAIR DUE DATES

LEAK LIMIT:

DATE DUE:

COMPLETED:

REPAIR STATUS

DATE REPAIRED: 03/23/2018 **EST. REPAIR DATE:** **ISOLATED FROM SVC:** **RETURNED TO SVC:**

PLACED ON DELAY: **AUTHORIZED BY:** **YRS ON DELAY:** **WARRANTY EXPIRY:**

REASON: **WORK ORDER #:**

EXTRAORDINARY ATT ALLOWED: Yes

COMMENT: **CLOSE AUTH BY:**

REPAIR ATTEMPTS

EMISSION POINT: Valve Packing

ATTEMPT DATE	REPAIR METHOD	MATERIAL USED	REMON DATE	BKGD	READING	AVO	TECHNICIAN	INSTRUMENT	TECH MADE ATT	EX ATT
03/23/18 08:38:26	Tighten Packing		03/23/18 08:40:21	9.34	221.00	NO	Brent Birdwell	9262	No	No

EQUIPMENT

TAG NO.: R667 **LINE #:** U **LOCATION:** 1FT S OF DIRTY WATER TRANSFER BASIN PUMP **CVS:** No
ACCESS: Accessible **EQUIP:** Valve **GROUP:** 40 CFR 61 Subpart L **SIZE:** 2.000
SERVICE: Light Liquid **CONFIG:** Externally Actuated **PRODUCT:** UNCLASSIFIED **LEVEL:** 01
COMMENT: **P & ID :** U **UNDER 300 HRS:** No

INSPECTION

DATE READ: 05/09/2018 15:08:58 **READING:** 1,479.00 **AVO LEAK:** NO **LEAK LIMIT:** 500
TECHNICIAN: Brent Birdwell **BACKGROUND:** 68.42 **INSTRUMENT:** 9262

ATTEMPT DUE DATES

ATTEMPT: 1ST ATTEMPT
DATE DUE: 05/14/2018
COMPLETED: 05/09/2018

REPAIR DUE DATES

LEAK LIMIT: 500
DATE DUE: 05/24/2018
COMPLETED: 05/09/2018

REPAIR STATUS

DATE REPAIRED: 05/09/2018 **EST. REPAIR DATE:** **ISOLATED FROM SVC:** **RETURNED TO SVC:**
PLACED ON DELAY: **AUTHORIZED BY:** **YRS ON DELAY:** **WARRANTY EXPIRY:**
REASON: **WORK ORDER #:**
EXTRAORDINARY ATT ALLOWED: Yes
COMMENT: **CLOSE AUTH BY:**

REPAIR ATTEMPTS

EMISSION POINT: Valve Bonnet

ATTEMPT DATE	REPAIR METHOD	MATERIAL USED	REMON DATE	BKGD	READING	AVO	TECHNICIAN	INSTRUMENT	TECH MADE ATT	EX ATT
05/09/18 15:24:59	Rebuild / Replaced Equipment		05/09/18 15:28:00	60.78	142.00	NO	Brent Birdwell	9262	No	No

ABC Coke

Leaking Equipment for the Time Period From 01/01/2017 through 08/07/2018

UNIT: RECOVERY OF COKE FURNACE GASES

EQUIPMENT

TAG NO.: BLK188 **LINE #:** U **LOCATION:** TRANSFER BASIN PUMP W/1FL. 3WC & 1SC **CVS:** No

ACCESS: Accessible **EQUIP:** Pump **GROUP:** 40 CFR 61 Subpart V **SIZE:** 0.000

SERVICE: Light Liquid **CONFIG:** Standard Service **PRODUCT:** BENZENE **LEVEL:** 03

COMMENT: **P & ID :** U **UNDER 300 HRS:** No

INSPECTION

DATE READ: 08/22/2017 09:03:55 **READING:** 32,400.00 **AVO LEAK:** NO **LEAK LIMIT:** 10000

TECHNICIAN: Matt Case **BACKGROUND:** 4.00 **INSTRUMENT:** 9262

ATTEMPT DUE DATES

ATTEMPT: 1ST ATTEMPT

DATE DUE: 08/27/2017

COMPLETED: 08/22/2017

REPAIR DUE DATES

LEAK LIMIT:	**500**	**10000**
DATE DUE:	09/06/2017	09/06/2017
COMPLETED:	08/22/2017	08/22/2017

REPAIR STATUS

DATE REPAIRED: 08/22/2017 **EST. REPAIR DATE:** **ISOLATED FROM SVC:** **RETURNED TO SVC:**

PLACED ON DELAY: **AUTHORIZED BY:** **YRS ON DELAY:** **WARRANTY EXPIRY:**

REASON: **WORK ORDER #:**

EXTRAORDINARY ATT ALLOWED: Yes

COMMENT: **CLOSE AUTH BY:**

REPAIR ATTEMPTS

EMISSION POINT: Pump Seal

ATTEMPT DATE	REPAIR METHOD	MATERIAL USED	REMON DATE	BKGD	READING	AVO	TECHNICIAN	INSTRUMENT	TECH MADE ATT	EX ATT
08/22/17 11:55:41	Installed Sealing Material		08/22/17 12:01:07	0.82	1,015.00	NO	Matt Case	9262	No	No
08/22/17 13:02:47	Installed Sealing Material		08/22/17 13:06:30	5.35	5,643.00	NO	Matt Case	9262	No	No
08/22/17 14:08:50	Installed Sealing Material		08/22/17 14:15:44	4.30	320.00	NO	Matt Case	9262	No	No

16 TOTAL LEAKS FOR UNIT RECOVERY OF COKE FURNACE GASES

ABC Coke

Leaking Equipment for the Time Period From 01/01/2017 through 08/07/2018

16 TOTAL LEAKS

PRINTED ON 8/7/2018 AT 9:47:16AM

BLANK PAGE

ABC Coke

Calibrations for the Time Period From 01/01/2017 through 08/07/2018

Instrument:	TVA: 9269 - TVA 1000B
Date Calibrated:	01/13/2017 07:21:04
Calibration Type:	Precision
Pegged Rate:	10,000
Flow Rate:	
Technician:	1724 - Matt Case

Calibration Gases

Gas: 1000 - Airgas Ultra Pure Zero LOT NUMBER 87-400371069-1

Certification Date 05/20/2014 — Concentration (ppm) 0.000 — Expiration Date 05/20/2019

Calibrations

Error Precision(%)*	0.00	Passed	Readings (ppm)	0.000	0.000	0.000
Average Response Time (sec)	0.000	Passed	Response Time (sec)	0.000	0.000	0.000

Gas: 1001 - Airgas Lot Number 87-400377591-1

Certification Date 06/09/2014 — Concentration (ppm) 499.200 — Expiration Date 06/09/2019

Calibrations

Error Precision(%)*	0.29	Passed	Readings (ppm)	503.000	487.000	512.000
Average Response Time (sec)	5.670	Passed	Response Time (sec)	6.000	5.000	6.000

Drift Assessments

Assessment Time 11:13:31

Error Precision(%)*	-1.64	Passed	Drift Reading (ppm)	491.000	Drift Percent (%)	-1.93 Passed
Average Response Time (sec)	4.00	Passed	Response Time (sec)	4.000		

Assessment Tech 1724 Matt Case

Assessment Time 16:14:17

Error Precision(%)*	-4.25	Passed	Drift Reading (ppm)	478.000	Drift Percent (%)	-4.53 Passed
Average Response Time (sec)	4.00	Passed	Response Time (sec)	4.000		

Assessment Tech 1724 Matt Case

Response Time - Acceptable Response Time should be 30 seconds or less from the time the calibration gas is introduced, to the time the instrument is equal to or less than +/- ten percent (<=10%)

Error Precision - Precision for the instrument is accepted when the average percent error is equal to or less than 10%.

Standard Calibration Precision Formula:

Precision % = ((CalibrationReading) / GasConcentration) * 100

Precision Calibration Precision Formula:

Calibration Gas Concentration: C
Average Difference: ((Reading1 - C) + (Reading2 - C) + (Reading3 - C)) / 3
Precision % = (Average Difference / C) * 100

Drift Percent - End of Day Drift Assessment Required to be within 10% of Calibration.

ABC Coke

Calibrations for the Time Period From 01/01/2017 through 08/07/2018

Instrument:	TVA: 9269 - TVA 1000B
Date Calibrated:	01/13/2017 07:21:04
Calibration Type:	Precision
Pegged Rate:	10,000
Flow Rate:	
Technician:	1724 - Matt Case

Calibration Gases

Gas: 1002 - OSC2546

Certification Date 01/13/2016 Concentration (ppm) 9.729 000 Expiration Date 01/13/2019

Calibrations

Error Precision(%)*	-0.24	Passed	Readings (ppm)	9.681 000	9.713 000	9.722 000	
Average Response Time (sec)	5.670	Passed	Response Time (sec)	5 000	6 000	6 000	

Drift Assessments

Assessment Time 11:15:10

Error Precision(%)*	-0.16	Passed	Drift Reading (ppm)	9.713 000	Drift Percent (%)	0 08	Passed
Average Response Time (sec)	4.00	Passed	Response Time (sec)	4 000			

Assessment Tech 1724 Matt Case

Assessment Time 16:15:38

Error Precision(%)*	-0.94	Passed	Drift Reading (ppm)	9.638 000	Drift Percent (%)	-0 69	Passed
Average Response Time (sec)	4.00	Passed	Response Time (sec)	4 000			

Assessment Tech 1724 Matt Case

Response Time - Acceptable Response Time should be 30 seconds or less from the time the calibration gas is introduced, to the time the instrument is equal to or less than +/- ten percent (<=10%)

Error Precision - Precision for the instrument is accepted when the average percent error is equal to or less than 10%.

Standard Calibration Precision Formula:

Precision % = ((CalibrationReading) / GasConcentration) * 100

Precision Calibration Precision Formula:

Calibration Gas Concentration: C
Average Difference: ((Reading1 - C) + (Reading2 - C) + (Reading3 - C)) / 3
Precision % = (Average Difference / C) * 100

Drift Percent - End of Day Drift Assessment Required to be within 10% of Calibration.

ABC Coke

Calibrations for the Time Period From 01/01/2017 through 08/07/2018

Instrument:	TVA: 73272 - TVA1000B
Date Calibrated:	01/13/2017 07:22:16
Calibration Type:	Precision
Pegged Rate:	10,000
Flow Rate:	
Technician:	1670 - Mike Bean

Calibration Gases

Gas: 1000 - Airgas Ultra Pure Zero LOT NUMBER 87-400371069-1

Certification Date 05/20/2014 Concentration (ppm) 0.000 Expiration Date 05/20/2019

Calibrations

Error Precision(%)*	0.00	Passed	Readings (ppm)	0.000	0.000	0.000
Average Response Time (sec)	0.000	Passed	Response Time (sec)	0.000	0.000	0.000

Gas: 1001 - Airgas Lot Number 87-400377591-1

Certification Date 06/09/2014 Concentration (ppm) 499.200 Expiration Date 06/09/2019

Calibrations

Error Precision(%)*	-3.04	Passed	Readings (ppm)	475.000	486.000	491.000
Average Response Time (sec)	3.000	Passed	Response Time (sec)	3.000	3.000	3.000

Drift Assessments

Assessment Time 11:12:59

Error Precision(%)*	-2.44	Passed	Drift Reading (ppm)	487.000	Drift Percent (%)	0.62	Passed
Average Response Time (sec)	4.00	Passed	Response Time (sec)	4.000			

Assessment Tech 1670 Mike Bean

Assessment Time 16:13:24

Error Precision(%)*	-1.84	Passed	Drift Reading (ppm)	490.000	Drift Percent (%)	1.24	Passed
Average Response Time (sec)	4.00	Passed	Response Time (sec)	4.000			

Assessment Tech 1670 Mike Bean

Response Time - Acceptable Response Time should be 30 seconds or less from the time the calibration gas is introduced, to the time the instrument is equal to or less than +/- ten percent (<=10%)

Error Precision - Precision for the instrument is accepted when the average percent error is equal to or less than 10%.

Standard Calibration Precision Formula:

Precision % = ((CalibrationReading) / GasConcentration) * 100

Precision Calibration Precision Formula:

Calibration Gas Concentration: C
Average Difference: ((Reading1 - C) + (Reading2 - C) + (Reading3 - C)) / 3
Precision % = (Average Difference / C) * 100

Drift Percent - End of Day Drift Assessment Required to be within 10% of Calibration

Printed on 8/7/2018 at 9:49:48AM

ABC Coke

Calibrations for the Time Period From 01/01/2017 through 08/07/2018

Instrument:	TVA: 73272 - TVA1000B
Date Calibrated:	01/13/2017 07:22:16
Calibration Type:	Precision
Pegged Rate:	10,000
Flow Rate:	
Technician:	1670 - Mike Bean

Calibration Gases

Gas: 1002 - OSC2546

Certification Date 01/13/2016 Concentration (ppm) 9.729 000 Expiration Date 01/13/2019

Calibrations

Error Precision(%)*	-0.43	Passed	Readings (ppm)	9.684 000	9.688 000	9.690 000
Average Response Time (sec)	5.330	Passed	Response Time (sec)	6.000	6.000	4.000

Drift Assessments

Assessment Time 11:14:27

Error Precision(%)*	-0.39	Passed	Drift Reading (ppm)	9.691.000	Drift Percent (%)	0.04	Passed
Average Response Time (sec)	4.00	Passed	Response Time (sec)	4.000			

Assessment Tech 1670 Mike Bean

Assessment Time 16:14:51

Error Precision(%)*	-0.32	Passed	Drift Reading (ppm)	9.698.000	Drift Percent (%)	0.11	Passed
Average Response Time (sec)	4.00	Passed	Response Time (sec)	4.000			

Assessment Tech 1670 Mike Bean

Response Time - Acceptable Response Time should be 30 seconds or less from the time the calibration gas is introduced, to the time the instrument is equal to or less than +/- ten percent (<=10%)

Error Precision - Precision for the instrument is accepted when the average percent error is equal to or less than 10%.

Standard Calibration Precision Formula:

Precision % = ((CalibrationReading) / GasConcentration) * 100

Precision Calibration Precision Formula:

Calibration Gas Concentration: C
Average Difference: ((Reading1 - C) + (Reading2 - C) + (Reading3 - C)) / 3
Precision % = (Average Difference / C) * 100

Drift Percent - End of Day Drift Assessment Required to be within 10% of Calibration

ABC Coke

Calibrations for the Time Period From 01/01/2017 through 08/07/2018

Instrument:	TVA20: 1401 - TVA 2020
Date Calibrated:	01/27/2017 08:15:43
Calibration Type:	Precision
Pegged Rate:	30,000
Flow Rate:	
Technician:	001 - PPM Consulting Technician

Calibration Gases

Gas: 1001 - Airgas Lot Number 87-400377591-1

Certification Date 06/09/2014 — Concentration (ppm) 499.200 — Expiration Date 06/09/2019

Calibrations

Error Precision(%)*	-5.05	Passed	Readings (ppm)	472.000	476.000	474.000
Average Response Time (sec)	2.500	Passed	Response Time (sec)	2.500	2.500	2.500

Gas: 1002 - OSC2546

Certification Date 01/13/2016 — Concentration (ppm) 9,729.000 — Expiration Date 01/13/2019

Calibrations

Error Precision(%)*	0.57	Passed	Readings (ppm)	9,800.000	9,883.000	9,670.000
Average Response Time (sec)	2.500	Passed	Response Time (sec)	2.500	2.500	2.500

Response Time - Acceptable Response Time should be 30 seconds or less from the time the calibration gas is introduced, to the time the instrument is equal to or less than +/- ten percent (<=10%)

Error Precision - Precision for the instrument is accepted when the average percent error is equal to or less than 10%.

Standard Calibration Precision Formula:

Precision % = ((CalibrationReading) / GasConcentration) * 100

Precision Calibration Precision Formula:

Calibration Gas Concentration: C
Average Difference: ((Reading1 - C) + (Reading2 - C) + (Reading3 - C)) / 3
Precision % = (Average Difference / C) * 100

Drift Percent - End of Day Drift Assessment Required to be within 10% of Calibration.

ABC Coke

Calibrations for the Time Period From 01/01/2017 through 08/07/2018

Instrument:	TVA20: 1401 - TVA 2020
Date Calibrated:	02/01/2017 14:13:02
Calibration Type:	Precision
Pegged Rate:	30,000
Flow Rate:	
Technician:	002 - ABC COKE Technician

Calibration Gases

Gas: 1001 - Airgas Lot Number 87-400377591-1

Certification Date 06/09/2014 Concentration (ppm) 499.200 Expiration Date 06/09/2019

Calibrations

Error Precision(%)*	-5.05	Passed	Readings (ppm)	472.000	476.000	474.000
Average Response Time (sec)	2.500	Passed	Response Time (sec)	2.500	2.500	2.500

Drift Assessments

Assessment Time 15:36:02

Error Precision(%)*	-6.05	Passed	Drift Reading (ppm)	469.000	Drift Percent (%)	-1.05 Passed
Average Response Time (sec)	2.50	Passed	Response Time (sec)	2.500		

Assessment Tech 002 ABC COKE Technician

Gas: 1002 - OSC2546

Certification Date 01/13/2016 Concentration (ppm) 9.729.000 Expiration Date 01/13/2019

Calibrations

Error Precision(%)*	0.57	Passed	Readings (ppm)	9.800.000	9,883.000	9.670.000
Average Response Time (sec)	2.500	Passed	Response Time (sec)	2.500	2.500	2.500

Drift Assessments

Assessment Time 15:36:49

Error Precision(%)*	0.01	Passed	Drift Reading (ppm)	9.730.000	Drift Percent (%)	-0.56 Passed
Average Response Time (sec)	2.50	Passed	Response Time (sec)	2.500		

Assessment Tech 002 ABC COKE Technician

Response Time - Acceptable Response Time should be 30 seconds or less from the time the calibration gas is introduced, to the time the instrument is equal to or less than +/- ten percent (<=10%)

Error Precision - Precision for the instrument is accepted when the average percent error is equal to or less than 10%.

Standard Calibration Precision Formula:

Precision % = ((CalibrationReading) / GasConcentration) * 100

Precision Calibration Precision Formula:

Calibration Gas Concentration: C
Average Difference: ((Reading1 - C) + (Reading2 - C) + (Reading3 - C)) / 3
Precision % = (Average Difference / C) * 100

Drift Percent - End of Day Drift Assessment Required to be within 10% of Calibration

ABC Coke

Calibrations for the Time Period From 01/01/2017 through 08/07/2018

Instrument:	TVA: 9269 - TVA 1000B
Date Calibrated:	02/15/2017 06:03:41
Calibration Type:	Precision
Pegged Rate:	10,000
Flow Rate:	
Technician:	1724 - Matt Case

Calibration Gases

Gas: 1001 - Airgas Lot Number 87-400377591-1

Certification Date 06/09/2014 — Concentration (ppm) 499.200 — Expiration Date 06/09/2019

Calibrations

Error Precision(%)*	-2.18	Passed	Readings (ppm)	487.000	492.000	486.000
Average Response Time (sec)	4.330	Passed	Response Time (sec)	4.000	5.000	4.000

Drift Assessments

Assessment Time 11:30:13

Error Precision(%)*	-3.65	Passed	Drift Reading (ppm)	481.000	Drift Percent (%)	-1.50 Passed
Average Response Time (sec)	4.00	Passed	Response Time (sec)	4.000		

Assessment Tech 1724 Matt Case

Assessment Time 16:30:42

Error Precision(%)*	-1.24	Passed	Drift Reading (ppm)	493.000	Drift Percent (%)	0.96 Passed
Average Response Time (sec)	4.00	Passed	Response Time (sec)	4.000		

Assessment Tech 1724 Matt Case

Gas: 1002 - OSC2546

Certification Date 01/13/2016 — Concentration (ppm) 9,729.000 — Expiration Date 01/13/2019

Calibrations

Error Precision(%)*	-0.49	Passed	Readings (ppm)	9,703.000	9,659.000	9,681.000
Average Response Time (sec)	4.330	Passed	Response Time (sec)	5.000	4.000	4.000

Drift Assessments

Assessment Time 11:32:01

Error Precision(%)*	-0.69	Passed	Drift Reading (ppm)	9,662.000	Drift Percent (%)	-0.20 Passed
Average Response Time (sec)	4.00	Passed	Response Time (sec)	4.000		

Assessment Tech 1724 Matt Case

Assessment Time 16:32:24

Error Precision(%)*	-0.43	Passed	Drift Reading (ppm)	9,687.000	Drift Percent (%)	0.06 Passed
Average Response Time (sec)	4.00	Passed	Response Time (sec)	4.000		

Assessment Tech 1724 Matt Case

Response Time - Acceptable Response Time should be 30 seconds or less from the time the calibration gas is introduced, to the time the instrument is equal to or less than +/- ten percent (<=10%)

Error Precision - Precision for the instrument is accepted when the average percent error is equal to or less than 10%.

Standard Calibration Precision Formula:

Precision % = ((CalibrationReading) / GasConcentration) * 100

Precision Calibration Precision Formula:

Calibration Gas Concentration: C
Average Difference: ((Reading1 - C) + (Reading2 - C) + (Reading3 - C)) / 3
Precision % = (Average Difference / C) * 100

Drift Percent - End of Day Drift Assessment Required to be within 10% of Calibration.

ABC Coke

Calibrations for the Time Period From 01/01/2017 through 08/07/2018

Instrument:	TVA: 73272 - TVA1000B
Date Calibrated:	02/15/2017 06:05:20
Calibration Type:	Precision
Pegged Rate:	10,000
Flow Rate:	
Technician:	1670 - Mike Bean

Calibration Gases

Gas: 1001 - Airgas Lot Number 87-400377591-1

Certification Date 06/09/2014 — Concentration (ppm) 499.200 — Expiration Date 06/09/2019

Calibrations

Error Precision(%)*	-4.05	Passed	Readings (ppm)	489.000	467.000	481.000
Average Response Time (sec)	4.000	Passed	Response Time (sec)	4.000	4.000	4.000

Drift Assessments

Assessment Time 11:32:33

Error Precision(%)*	-1.44	Passed	Drift Reading (ppm)	492.000	Drift Percent (%)	2.71 Passed
Average Response Time (sec)	4.00	Passed	Response Time (sec)	4.000		

Assessment Tech 1670 Mike Bean

Assessment Time 15:33:18

Error Precision(%)*	-3.85	Passed	Drift Reading (ppm)	480.000	Drift Percent (%)	0.21 Passed
Average Response Time (sec)	4.00	Passed	Response Time (sec)	4.000		

Assessment Tech 1670 Mike Bean

Gas: 1002 - OSC2546

Certification Date 01/13/2016 — Concentration (ppm) 9.729.000 — Expiration Date 01/13/2019

Calibrations

Error Precision(%)*	-0.45	Passed	Readings (ppm)	9.677.000	9.689.000	9.691.000
Average Response Time (sec)	5.000	Passed	Response Time (sec)	5.000	5.000	5.000

Drift Assessments

Assessment Time 11:34:21

Error Precision(%)*	-0.56	Passed	Drift Reading (ppm)	9,675.000	Drift Percent (%)	-0.11 Passed
Average Response Time (sec)	4.00	Passed	Response Time (sec)	4.000		

Assessment Tech 1670 Mike Bean

Assessment Time 15:34:43

Error Precision(%)*	-0.60	Passed	Drift Reading (ppm)	9.671.000	Drift Percent (%)	-0.15 Passed
Average Response Time (sec)	5.00	Passed	Response Time (sec)	5.000		

Assessment Tech 1670 Mike Bean

Response Time - Acceptable Response Time should be 30 seconds or less from the time the calibration gas is introduced, to the time the instrument is equal to or less than +/- ten percent (<=10%)

Error Precision - Precision for the instrument is accepted when the average percent error is equal to or less than 10%.

Standard Calibration Precision Formula:

Precision % = ((CalibrationReading) / GasConcentration) * 100

Precision Calibration Precision Formula:

Calibration Gas Concentration: C
Average Difference: ((Reading1 - C) + (Reading2 - C) + (Reading3 - C)) / 3
Precision % = (Average Difference / C) * 100

Drift Percent - End of Day Drift Assessment Required to be within 10% of Calibration

ABC Coke

Calibrations for the Time Period From 01/01/2017 through 08/07/2018

Instrument:	TVA: 73272 - TVA1000B
Date Calibrated:	03/08/2017 13:06:16
Calibration Type:	Precision
Pegged Rate:	10,000
Flow Rate:	
Technician:	829 - ARAN PARKER

Calibration Gases

Gas: 1001 - Airgas Lot Number 87-400377591-1

Certification Date 06/09/2014 Concentration (ppm) 499.200 Expiration Date 06/09/2019

Calibrations

Error Precision(%)*	-0.04	Passed	Readings (ppm)	499.000	499.000	499.000
Average Response Time (sec)	4.000	Passed	Response Time (sec)	4.000	4.000	4.000

Gas: 1002 - OSC2546

Certification Date 01/13/2016 Concentration (ppm) 9,729.000 Expiration Date 01/13/2019

Calibrations

Error Precision(%)*	2.62	Passed	Readings (ppm)	9,987.000	9,978.000	9,986.000
Average Response Time (sec)	4.000	Passed	Response Time (sec)	4.000	4.000	4.000

Response Time - Acceptable Response Time should be 30 seconds or less from the time the calibration gas is introduced, to the time the instrument is equal to or less than +/- ten percent (<=10%)

Error Precision - Precision for the instrument is accepted when the average percent error is equal to or less than 10%.

Standard Calibration Precision Formula:

Precision % = ((CalibrationReading) / GasConcentration) * 100

Precision Calibration Precision Formula:

Calibration Gas Concentration: C
Average Difference: ((Reading1 - C) + (Reading2 - C) + (Reading3 - C)) / 3
Precision % = (Average Difference / C) * 100

Drift Percent - End of Day Drift Assessment Required to be within 10% of Calibration.

ABC Coke

Calibrations for the Time Period From 01/01/2017 through 08/07/2018

Instrument:	TVA: 73272 - TVA1000B
Date Calibrated:	03/20/2017 09:36:33
Calibration Type:	Precision
Pegged Rate:	10,000
Flow Rate:	
Technician:	829 - ARAN PARKER

Calibration Gases

Gas: 1001 - Airgas Lot Number 87-400377591-1

Certification Date 06/09/2014 Concentration (ppm) 499.200 Expiration Date 06/09/2019

Calibrations

Error Precision(%)*	0.23	Passed	Readings (ppm)	506.000	497.000	498.000
Average Response Time (sec)	3.330	Passed	Response Time (sec)	3.000	3.000	4.000

Gas: 1002 - OSC2546

Certification Date 01/13/2016 Concentration (ppm) 9.729.000 Expiration Date 01/13/2019

Calibrations

Error Precision(%)*	2.10	Passed	Readings (ppm)	9.976.000	9.854.000	9.971.000
Average Response Time (sec)	3.670	Passed	Response Time (sec)	4.000	4.000	3.000

Response Time - Acceptable Response Time should be 30 seconds or less from the time the calibration gas is introduced, to the time the instrument is equal to or less than +/- ten percent (<=10%)

Error Precision - Precision for the instrument is accepted when the average percent error is equal to or less than 10%.

Standard Calibration Precision Formula:

Precision % = ((CalibrationReading) / GasConcentration) * 100

Precision Calibration Precision Formula:

Calibration Gas Concentration: C
Average Difference: ((Reading1 - C) + (Reading2 - C) + (Reading3 - C)) / 3
Precision % = (Average Difference / C) * 100

Drift Percent - End of Day Drift Assessment Required to be within 10% of Calibration.

ABC Coke

Calibrations for the Time Period From 01/01/2017 through 08/07/2018

Instrument:	TVA: 73272 - TVA1000B
Date Calibrated:	03/24/2017 08:43:43
Calibration Type:	Precision
Pegged Rate:	10,000
Flow Rate:	
Technician:	1670 - Mike Bean

Calibration Gases

Gas: 1001 - Airgas Lot Number 87-400377591-1

Certification Date 06/09/2014 — Concentration (ppm) 499.200 — Expiration Date 06/09/2019

Calibrations

Error Precision(%)*	-5.85	Passed	Readings (ppm)	467.000	488.000	455.000
Average Response Time (sec)	3.000	Passed	Response Time (sec)	3.000	3.000	3.000

Drift Assessments

Assessment Time 11:03:07

Error Precision(%)*	-1.44	Passed	Drift Reading (ppm)	492.000	Drift Percent (%)	4.68 Passed
Average Response Time (sec)	3.00	Passed	Response Time (sec)	3.000		

Assessment Tech 1670 Mike Bean

Assessment Time 15:03:53

Error Precision(%)*	-0.44	Passed	Drift Reading (ppm)	497.000	Drift Percent (%)	5.74 Passed
Average Response Time (sec)	3.00	Passed	Response Time (sec)	3.000		

Assessment Tech 1670 Mike Bean

Gas: 1002 - OSC2546

Certification Date 01/13/2016 — Concentration (ppm) 9,729.000 — Expiration Date 01/13/2019

Calibrations

Error Precision(%)*	0.13	Passed	Readings (ppm)	9,764.000	9,677.000	9,785.000
Average Response Time (sec)	5.000	Passed	Response Time (sec)	5.000	5.000	5.000

Drift Assessments

Assessment Time 11:05:02

Error Precision(%)*	-0.48	Passed	Drift Reading (ppm)	9,682.000	Drift Percent (%)	-0.62 Passed
Average Response Time (sec)	5.00	Passed	Response Time (sec)	5.000		

Assessment Tech 1670 Mike Bean

Assessment Time 15:06:01

Error Precision(%)*	-0.53	Passed	Drift Reading (ppm)	9,677.000	Drift Percent (%)	-0.67 Passed
Average Response Time (sec)	5.00	Passed	Response Time (sec)	5.000		

Assessment Tech 1670 Mike Bean

Response Time - Acceptable Response Time should be 30 seconds or less from the time the calibration gas is introduced, to the time the instrument is equal to or less than +/- ten percent (<=10%)

Error Precision - Precision for the instrument is accepted when the average percent error is equal to or less than 10%.

Standard Calibration Precision Formula:

Precision % = ((CalibrationReading) / GasConcentration) * 100

Precision Calibration Precision Formula:

Calibration Gas Concentration: C
Average Difference: ((Reading1 - C) + (Reading2 - C) + (Reading3 - C)) / 3
Precision % = (Average Difference / C) * 100

Drift Percent - End of Day Drift Assessment Required to be within 10% of Calibration

ABC Coke

Calibrations for the Time Period From 01/01/2017 through 08/07/2018

Instrument:	TVA: 70803 - TVA1000B
Date Calibrated:	03/24/2017 08:45:02
Calibration Type:	Precision
Pegged Rate:	10,000
Flow Rate:	
Technician:	1724 - Matt Case

Calibration Gases

Gas: 1001 - Airgas Lot Number 87-400377591-1

Certification Date 06/09/2014 | Concentration (ppm) 499.200 | Expiration Date 06/09/2019

Calibrations

Error Precision(%)*	-2.44	Passed	Readings (ppm)	487.000	481.000	493.000
Average Response Time (sec)	4.330	Passed	Response Time (sec)	4.000	4.000	5.000

Drift Assessments

Assessment Time 11:09:16

Error Precision(%)*	-4.25	Passed	Drift Reading (ppm)	478.000	Drift Percent (%)	-1.85 Passed
Average Response Time (sec)	4.00	Passed	Response Time (sec)	4.000		

Assessment Tech 1724 Matt Case

Assessment Time 15:09:50

Error Precision(%)*	1.36	Passed	Drift Reading (ppm)	506.000	Drift Percent (%)	3.90 Passed
Average Response Time (sec)	4.00	Passed	Response Time (sec)	4.000		

Assessment Tech 1724 Matt Case

Gas: 1002 - OSC2546

Certification Date 01/13/2016 | Concentration (ppm) 9,729.000 | Expiration Date 01/13/2019

Calibrations

Error Precision(%)*	-0.22	Passed	Readings (ppm)	9,671.000	9,709.000	9,742.000
Average Response Time (sec)	4.670	Passed	Response Time (sec)	4.000	5.000	5.000

Drift Assessments

Assessment Time 11:11:17

Error Precision(%)*	-0.15	Passed	Drift Reading (ppm)	9,714.000	Drift Percent (%)	0.07 Passed
Average Response Time (sec)	4.00	Passed	Response Time (sec)	4.000		

Assessment Tech 1724 Matt Case

Assessment Time 15:11:45

Error Precision(%)*	-0.63	Passed	Drift Reading (ppm)	9,668.000	Drift Percent (%)	-0.41 Passed
Average Response Time (sec)	4.00	Passed	Response Time (sec)	4.000		

Assessment Tech 1724 Matt Case

Response Time - Acceptable Response Time should be 30 seconds or less from the time the calibration gas is introduced, to the time the instrument is equal to or less than +/- ten percent (<=10%)

Error Precision - Precision for the instrument is accepted when the average percent error is equal to or less than 10%.

Standard Calibration Precision Formula:

Precision % = ((CalibrationReading) / GasConcentration) * 100

Precision Calibration Precision Formula:

Calibration Gas Concentration: C
Average Difference: ((Reading1 - C) + (Reading2 - C) + (Reading3 - C)) / 3
Precision % = (Average Difference / C) * 100

Drift Percent - End of Day Drift Assessment Required to be within 10% of Calibration.

ABC Coke

Calibrations for the Time Period From 01/01/2017 through 08/07/2018

Instrument:	TVA: 73272 - TVA1000B
Date Calibrated:	03/29/2017 11:52:25
Calibration Type:	Precision
Pegged Rate:	10,000
Flow Rate:	
Technician:	001 - PPM Consulting Technician

Calibration Gases

Gas: 1001 - Airgas Lot Number 87-400377591-1

Certification Date 06/09/2014 | Concentration (ppm) 499.200 | Expiration Date 06/09/2019

Calibrations

Error Precision(%)*	0.16	Passed	Readings (ppm)	500.000	500.000	500.000
Average Response Time (sec)	4.000	Passed	Response Time (sec)	4.000	4.000	4.000

Gas: 1002 - OSC2546

Certification Date 01/13/2016 | Concentration (ppm) 9,729.000 | Expiration Date 01/13/2019

Calibrations

Error Precision(%)*	2.79	Passed	Readings (ppm)	10,000.000	10,000.000	10,000.000
Average Response Time (sec)	4.000	Passed	Response Time (sec)	4.000	4.000	4.000

Response Time - Acceptable Response Time should be 30 seconds or less from the time the calibration gas is introduced, to the time the instrument is equal to or less than +/- ten percent (<=10%)

Error Precision - Precision for the instrument is accepted when the average percent error is equal to or less than 10%.

Standard Calibration Precision Formula:

Precision % = ((CalibrationReading) / GasConcentration) * 100

Precision Calibration Precision Formula:

Calibration Gas Concentration: C
Average Difference: ((Reading1 - C) + (Reading2 - C) + (Reading3 - C)) / 3
Precision % = (Average Difference / C) * 100

Drift Percent - End of Day Drift Assessment Required to be within 10% of Calibration.

ABC Coke

Calibrations for the Time Period From 01/01/2017 through 08/07/2018

Instrument:	TVA: 0115249285 - TVA1000B
Date Calibrated:	04/14/2017 05:48:06
Calibration Type:	Precision
Pegged Rate:	10,000
Flow Rate:	
Technician:	1670 - Mike Bean

Calibration Gases

Gas: 1001 - Airgas Lot Number 87-400377591-1

Certification Date 06/09/2014 | Concentration (ppm) 499 200 | Expiration Date 06/09/2019

Calibrations

Error Precision(%)*	0.16	Passed	Readings (ppm)	500 000	500 000	500 000
Average Response Time (sec)	5.000	Passed	Response Time (sec)	5.000	5.000	5.000

Drift Assessments

Assessment Time 15:12:11						
Error Precision(%)*	1.36	Passed	Drift Reading (ppm)	506 000	Drift Percent (%)	1.20 Passed
Average Response Time (sec)	4.00	Passed	Response Time (sec)	4.000		
Assessment Tech 1670 Mike Bean						
Assessment Time 16:15:36						
Error Precision(%)*	0.56	Passed	Drift Reading (ppm)	502 000	Drift Percent (%)	0.40 Passed
Average Response Time (sec)	3.00	Passed	Response Time (sec)	3.000		
Assessment Tech 1670 Mike Bean						

Gas: 1002 - OSC2546

Certification Date 01/13/2016 | Concentration (ppm) 9.729 000 | Expiration Date 01/13/2019

Calibrations

Error Precision(%)*	2.79	Passed	Readings (ppm)	10,000 000	10,000 000	10,000 000
Average Response Time (sec)	5.000	Passed	Response Time (sec)	5.000	5.000	5.000

Drift Assessments

Assessment Time 12:17:00						
Error Precision(%)*	2.56	Passed	Drift Reading (ppm)	9,978.000	Drift Percent (%)	-0.22 Passed
Average Response Time (sec)	4.00	Passed	Response Time (sec)	4.000		
Assessment Tech 1670 Mike Bean						
Assessment Time 15:17:29						
Error Precision(%)*	2.63	Passed	Drift Reading (ppm)	9,985.000	Drift Percent (%)	-0.15 Passed
Average Response Time (sec)	4.00	Passed	Response Time (sec)	4.000		
Assessment Tech 1670 Mike Bean						

Response Time - Acceptable Response Time should be 30 seconds or less from the time the calibration gas is introduced, to the time the instrument is equal to or less than +/- ten percent (<=10%)

Error Precision - Precision for the instrument is accepted when the average percent error is equal to or less than 10%.

Standard Calibration Precision Formula:

Precision % = ((CalibrationReading) / GasConcentration) * 100

Precision Calibration Precision Formula:

Calibration Gas Concentration: C
Average Difference: ((Reading1 - C) + (Reading2 - C) + (Reading3 - C)) / 3
Precision % = (Average Difference / C) * 100

Drift Percent - End of Day Drift Assessment Required to be within 10% of Calibration.

ABC Coke

Calibrations for the Time Period From 01/01/2017 through 08/07/2018

Instrument:	TVA: 9262 - TVA 1000B
Date Calibrated:	04/14/2017 07:48:45
Calibration Type:	Precision
Pegged Rate:	10,000
Flow Rate:	
Technician:	1724 - Matt Case

Calibration Gases

Gas: 1001 - Airgas Lot Number 87-400377591-1

Certification Date 06/09/2014 Concentration (ppm) 499.200 Expiration Date 06/09/2019

Calibrations

Error Precision(%)*	-4.18	Passed	Readings (ppm)	472.000	478.000	485.000
Average Response Time (sec)	4.000	Passed	Response Time (sec)	4.000	4.000	4.000

Drift Assessments

Assessment Time 11:39:14

Error Precision(%)*	-4.45	Passed	Drift Reading (ppm)	477.000	Drift Percent (%)	-0.28 Passed
Average Response Time (sec)	4.00	Passed	Response Time (sec)	4.000		

Assessment Tech 1724 Matt Case

Assessment Time 15:40:13

Error Precision(%)*	-3.65	Passed	Drift Reading (ppm)	481.000	Drift Percent (%)	0.56 Passed
Average Response Time (sec)	4.00	Passed	Response Time (sec)	4.000		

Assessment Tech 1724 Matt Case

Gas: 1002 - OSC2546

Certification Date 01/13/2016 Concentration (ppm) 9,729.000 Expiration Date 01/13/2019

Calibrations

Error Precision(%)*	-1.13	Passed	Readings (ppm)	9,612.000	9,638.000	9,607.000
Average Response Time (sec)	4.000	Passed	Response Time (sec)	4.000	4.000	4.000

Drift Assessments

Assessment Time 11:41:30

Error Precision(%)*	-1.08	Passed	Drift Reading (ppm)	9,624.000	Drift Percent (%)	0.05 Passed
Average Response Time (sec)	4.00	Passed	Response Time (sec)	4.000		

Assessment Tech 1724 Matt Case

Assessment Time 15:41:58

Error Precision(%)*	-0.93	Passed	Drift Reading (ppm)	9,639.000	Drift Percent (%)	0.21 Passed
Average Response Time (sec)	4.00	Passed	Response Time (sec)	4.000		

Assessment Tech 1724 Matt Case

Response Time - Acceptable Response Time should be 30 seconds or less from the time the calibration gas is introduced, to the time the instrument is equal to or less than +/- ten percent (<=10%)

Error Precision - Precision for the instrument is accepted when the average percent error is equal to or less than 10%.

Standard Calibration Precision Formula:

Precision % = ((CalibrationReading) / GasConcentration) * 100

Precision Calibration Precision Formula:

Calibration Gas Concentration: C
Average Difference: ((Reading1 - C) + (Reading2 - C) + (Reading3 - C)) / 3
Precision % = (Average Difference / C) * 100

Drift Percent - End of Day Drift Assessment Required to be within 10% of Calibration.

ABC Coke

Calibrations for the Time Period From 01/01/2017 through 08/07/2018

Instrument:	TVA: 73272 - TVA1000B
Date Calibrated:	04/24/2017 10:37:34
Calibration Type:	Precision
Pegged Rate:	10,000
Flow Rate:	
Technician:	001 - PPM Consulting Technician

Calibration Gases

Gas: 1001 - Airgas Lot Number 87-400377591-1

Certification Date 06/09/2014 | Concentration (ppm) 499.200 | Expiration Date 06/09/2019

Calibrations

Error Precision(%)*	-0.04	Passed	Readings (ppm)	499.000	499.000	499.000
Average Response Time (sec)	4.000	Passed	Response Time (sec)	4.000	4.000	4.000

Gas: 1002 - OSC2546

Certification Date 01/13/2016 | Concentration (ppm) 9.729.000 | Expiration Date 01/13/2019

Calibrations

Error Precision(%)*	2.78	Passed	Readings (ppm)	9.999.000	9.999.000	9.999.000
Average Response Time (sec)	4.000	Passed	Response Time (sec)	4.000	4.000	4.000

Response Time - Acceptable Response Time should be 30 seconds or less from the time the calibration gas is introduced, to the time the instrument is equal to or less than +/- ten percent (<=10%)

Error Precision - Precision for the instrument is accepted when the average percent error is equal to or less than 10%.

Standard Calibration Precision Formula:

Precision % = ((CalibrationReading) / GasConcentration) * 100

Precision Calibration Precision Formula:

Calibration Gas Concentration: C
Average Difference: ((Reading1 - C) + (Reading2 - C) + (Reading3 - C)) / 3
Precision % = (Average Difference / C) * 100

Drift Percent - End of Day Drift Assessment Required to be within 10% of Calibration.

ABC Coke

Calibrations for the Time Period From 01/01/2017 through 08/07/2018

Instrument:	TVA: 9262 - TVA 1000B
Date Calibrated:	05/24/2017 05:56:21
Calibration Type:	Precision
Pegged Rate:	10,000
Flow Rate:	
Technician:	1724 - Matt Case

Calibration Gases

Gas: 1001 - Airgas Lot Number 87-400377591-1

Certification Date 06/09/2014 | Concentration (ppm) 499.200 | Expiration Date 06/09/2019

Calibrations

Error Precision(%)*	-3.65	Passed	Readings (ppm)	481.000	474.000	488.000
Average Response Time (sec)	4.000	Passed	Response Time (sec)	4.000	4.000	4.000

Drift Assessments

Assessment Time 11:44:21						
Error Precision(%)*	-4.45	Passed	Drift Reading (ppm)	477.000	Drift Percent (%)	-0.83 Passed
Average Response Time (sec)	4.00	Passed	Response Time (sec)	4.000		
Assessment Tech 1724 Matt Case						
Assessment Time 14:44:43						
Error Precision(%)*	-3.04	Passed	Drift Reading (ppm)	484.000	Drift Percent (%)	0.62 Passed
Average Response Time (sec)	4.00	Passed	Response Time (sec)	4.000		
Assessment Tech 1670 Mike Bean						

Gas: 1002 - OSC2546

Certification Date 01/13/2016 | Concentration (ppm) 9,729.000 | Expiration Date 01/13/2019

Calibrations

Error Precision(%)*	-0.60	Passed	Readings (ppm)	9,673.000	9,659.000	9,681.000
Average Response Time (sec)	4.000	Passed	Response Time (sec)	4.000	4.000	4.000

Drift Assessments

Assessment Time 11:45:39						
Error Precision(%)*	-1.00	Passed	Drift Reading (ppm)	9,632.000	Drift Percent (%)	-0.40 Passed
Average Response Time (sec)	4.00	Passed	Response Time (sec)	4.000		
Assessment Tech 1724 Matt Case						
Assessment Time 14:46:05						
Error Precision(%)*	-0.73	Passed	Drift Reading (ppm)	9,658.000	Drift Percent (%)	-0.13 Passed
Average Response Time (sec)	4.00	Passed	Response Time (sec)	4.000		
Assessment Tech 1724 Matt Case						

Response Time - Acceptable Response Time should be 30 seconds or less from the time the calibration gas is introduced, to the time the instrument is equal to or less than +/- ten percent (<=10%)

Error Precision - Precision for the instrument is accepted when the average percent error is equal to or less than 10%.

Standard Calibration Precision Formula:

Precision % = ((CalibrationReading) / GasConcentration) * 100

Precision Calibration Precision Formula:

Calibration Gas Concentration: C
Average Difference: ((Reading1 - C) + (Reading2 - C) + (Reading3 - C)) / 3
Precision % = (Average Difference / C) * 100

Drift Percent - End of Day Drift Assessment Required to be within 10% of Calibration

ABC Coke

Calibrations for the Time Period From 01/01/2017 through 08/07/2018

Instrument:	TVA: 9269 - TVA 1000B
Date Calibrated:	05/24/2017 06:01:15
Calibration Type:	Precision
Pegged Rate:	10,000
Flow Rate:	
Technician:	1670 - Mike Bean

Calibration Gases

Gas: 1001 - Airgas Lot Number 87-400377591-1

Certification Date 06/09/2014 | Concentration (ppm) 499.200 | Expiration Date 06/09/2019

Calibrations

Error Precision(%)*	-5.18	Passed	Readings (ppm)	472.000	477.000	471.000	
Average Response Time (sec)	3.000	Passed	Response Time (sec)	3.000	3.000	3.000	

Drift Assessments

Assessment Time 11:41:26

Error Precision(%)*	-5.25	Passed	Drift Reading (ppm)	473.000	Drift Percent (%)	-0.07	Passed
Average Response Time (sec)	4.00	Passed	Response Time (sec)	4.000			

Assessment Tech 1670 Mike Bean

Assessment Time 15:41:48

Error Precision(%)*	-4.25	Passed	Drift Reading (ppm)	478.000	Drift Percent (%)	0.99	Passed
Average Response Time (sec)	4.00	Passed	Response Time (sec)	4.000			

Assessment Tech 1670 Mike Bean

Gas: 1002 - OSC2546

Certification Date 01/13/2016 | Concentration (ppm) 9,729.000 | Expiration Date 01/13/2019

Calibrations

Error Precision(%)*	-1.07	Passed	Readings (ppm)	9,639.000	9,614.000	9,621.000	
Average Response Time (sec)	3.000	Passed	Response Time (sec)	3.000	3.000	3.000	

Drift Assessments

Assessment Time 11:42:46

Error Precision(%)*	-0.90	Passed	Drift Reading (ppm)	9,641.000	Drift Percent (%)	0.17	Passed
Average Response Time (sec)	4.00	Passed	Response Time (sec)	4.000			

Assessment Tech 1670 Mike Bean

Assessment Time 15:43:20

Error Precision(%)*	-1.16	Passed	Drift Reading (ppm)	9,616.000	Drift Percent (%)	-0.09	Passed
Average Response Time (sec)	4.00	Passed	Response Time (sec)	4.000			

Assessment Tech 1670 Mike Bean

Response Time - Acceptable Response Time should be 30 seconds or less from the time the calibration gas is introduced, to the time the instrument is equal to or less than +/- ten percent (<=10%)

Error Precision - Precision for the instrument is accepted when the average percent error is equal to or less than 10%.

Standard Calibration Precision Formula:

Precision % = ((CalibrationReading) / GasConcentration) * 100

Precision Calibration Precision Formula:

Calibration Gas Concentration: C
Average Difference: ((Reading1 - C) + (Reading2 - C) + (Reading3 - C)) / 3
Precision % = (Average Difference / C) * 100

Drift Percent - End of Day Drift Assessment Required to be within 10% of Calibration.

ABC Coke

Calibrations for the Time Period From 01/01/2017 through 08/07/2018

Instrument:	TVA: 9262 - TVA 1000B
Date Calibrated:	05/26/2017 07:36:53
Calibration Type:	Precision
Pegged Rate:	10,000
Flow Rate:	
Technician:	1724 - Matt Case

Calibration Gases

Gas: 1001 - Airgas Lot Number 87-400377591-1

Certification Date 06/09/2014 Concentration (ppm) 499.200 Expiration Date 06/09/2019

Calibrations

Error Precision(%)*	0.23	Passed	Readings (ppm)	497.000	503.000	501.000
Average Response Time (sec)	4.000	Passed	Response Time (sec)	4.000	4.000	4.000

Drift Assessments

Assessment Time 11:18:07

Error Precision(%)*	-1.24	Passed	Drift Reading (ppm)	493.000	Drift Percent (%)	-1.47 Passed
Average Response Time (sec)	4.00	Passed	Response Time (sec)	4.000		

Assessment Tech 1724 Matt Case

Gas: 1002 - OSC2546

Certification Date 01/13/2016 Concentration (ppm) 9,729.000 Expiration Date 01/13/2019

Calibrations

Error Precision(%)*	-0.48	Passed	Readings (ppm)	9,681.000	9,674.000	9,691.000
Average Response Time (sec)	4.000	Passed	Response Time (sec)	4.000	4.000	4.000

Drift Assessments

Assessment Time 11:19:46

Error Precision(%)*	-0.73	Passed	Drift Reading (ppm)	9,658.000	Drift Percent (%)	-0.25 Passed
Average Response Time (sec)	4.00	Passed	Response Time (sec)	4.000		

Assessment Tech 1724 Matt Case

Response Time - Acceptable Response Time should be 30 seconds or less from the time the calibration gas is introduced, to the time the instrument is equal to or less than +/- ten percent (<=10%)

Error Precision - Precision for the instrument is accepted when the average percent error is equal to or less than 10%.

Standard Calibration Precision Formula:

Precision % = ((CalibrationReading) / GasConcentration) * 100

Precision Calibration Precision Formula:

Calibration Gas Concentration: C
Average Difference: ((Reading1 - C) + (Reading2 - C) + (Reading3 - C)) / 3
Precision % = (Average Difference / C) * 100

Drift Percent - End of Day Drift Assessment Required to be within 10% of Calibration.

ABC Coke

Calibrations for the Time Period From 01/01/2017 through 08/07/2018

Instrument:	TVA: 9262 - TVA 1000B
Date Calibrated:	06/21/2017 05:56:23
Calibration Type:	Precision
Pegged Rate:	10,000
Flow Rate:	
Technician:	1724 - Matt Case

Calibration Gases

Gas: 1001 - Airgas Lot Number 87-400377591-1

Certification Date 06/09/2014 — Concentration (ppm) 499.200 — Expiration Date 06/09/2019

Calibrations

Error Precision(%)*	-4.38	Passed	Readings (ppm)	473.000	481.000	478.000
Average Response Time (sec)	4.000	Passed	Response Time (sec)	4.000	4.000	4.000

Drift Assessments

Assessment Time 11:13:15

Error Precision(%)*	-2.44	Passed	Drift Reading (ppm)	487.000	Drift Percent (%)	2.03 Passed
Average Response Time (sec)	4.00	Passed	Response Time (sec)	4.000		

Assessment Tech 1724 Matt Case

Assessment Time 14:13:39

Error Precision(%)*	-5.45	Passed	Drift Reading (ppm)	472.000	Drift Percent (%)	-1.12 Passed
Average Response Time (sec)	4.00	Passed	Response Time (sec)	4.000		

Assessment Tech 1724 Matt Case

Gas: 1002 - OSC2546

Certification Date 01/13/2016 — Concentration (ppm) 9,729.000 — Expiration Date 01/13/2019

Calibrations

Error Precision(%)*	-1.25	Passed	Readings (ppm)	9,629.000	9,611.000	9,582.000
Average Response Time (sec)	4.000	Passed	Response Time (sec)	4.000	4.000	4.000

Drift Assessments

Assessment Time 11:14:45

Error Precision(%)*	-1.59	Passed	Drift Reading (ppm)	9,574.000	Drift Percent (%)	-0.35 Passed
Average Response Time (sec)	4.00	Passed	Response Time (sec)	4.000		

Assessment Tech 1724 Matt Case

Assessment Time 14:15:08

Error Precision(%)*	-1.65	Passed	Drift Reading (ppm)	9,568.000	Drift Percent (%)	-0.41 Passed
Average Response Time (sec)	4.00	Passed	Response Time (sec)	4.000		

Assessment Tech 1724 Matt Case

Response Time - Acceptable Response Time should be 30 seconds or less from the time the calibration gas is introduced, to the time the instrument is equal to or less than +/- ten percent (<=10%)

Error Precision - Precision for the instrument is accepted when the average percent error is equal to or less than 10%.

Standard Calibration Precision Formula:

Precision % = ((CalibrationReading) / GasConcentration) * 100

Precision Calibration Precision Formula:

Calibration Gas Concentration: C
Average Difference: ((Reading1 - C) + (Reading2 - C) + (Reading3 - C)) / 3
Precision % = (Average Difference / C) * 100

Drift Percent - End of Day Drift Assessment Required to be within 10% of Calibration

ABC Coke

Calibrations for the Time Period From 01/01/2017 through 08/07/2018

Instrument:	TVA: 9269 - TVA 1000B
Date Calibrated:	06/21/2017 05:57:17
Calibration Type:	Precision
Pegged Rate:	10.000
Flow Rate:	
Technician:	1802 - Chris Tisdale

Calibration Gases

Gas: 1001 - Airgas Lot Number 87-400377591-1

Certification Date 06/09/2014 — Concentration (ppm) 499.200 — Expiration Date 06/09/2019

Calibrations

Error Precision(%)*	-5.72	Passed	Readings (ppm)	468.000	473.000	471.000
Average Response Time (sec)	4.000	Passed	Response Time (sec)	4.000	4.000	4.000

Drift Assessments

Assessment Time 11:16:10

Error Precision(%)*	-4.85	Passed	Drift Reading (ppm)	475.000	Drift Percent (%)	0.92 Passed
Average Response Time (sec)	4.00	Passed	Response Time (sec)	4.000		

Assessment Tech 1724 Matt Case

Assessment Time 14:16:37

Error Precision(%)*	-6.65	Passed	Drift Reading (ppm)	466.000	Drift Percent (%)	-0.99 Passed
Average Response Time (sec)	4.00	Passed	Response Time (sec)	4.000		

Assessment Tech 1802 Chris Tisdale

Gas: 1002 - OSC2546

Certification Date 01/13/2016 — Concentration (ppm) 9,729.000 — Expiration Date 01/13/2019

Calibrations

Error Precision(%)*	-1.78	Passed	Readings (ppm)	9,552.000	9,566.000	9,549.000
Average Response Time (sec)	4.000	Passed	Response Time (sec)	4.000	4.000	4.000

Drift Assessments

Assessment Time 11:17:41

Error Precision(%)*	-1.73	Passed	Drift Reading (ppm)	9,561.000	Drift Percent (%)	0.06 Passed
Average Response Time (sec)	4.00	Passed	Response Time (sec)	4.000		

Assessment Tech 1802 Chris Tisdale

Assessment Time 14:18:01

Error Precision(%)*	-1.78	Passed	Drift Reading (ppm)	9,556.000	Drift Percent (%)	0.00 Passed
Average Response Time (sec)	4.00	Passed	Response Time (sec)	4.000		

Assessment Tech 1802 Chris Tisdale

Response Time - Acceptable Response Time should be 30 seconds or less from the time the calibration gas is introduced, to the time the instrument is equal to or less than +/- ten percent (<=10%)

Error Precision - Precision for the instrument is accepted when the average percent error is equal to or less than 10%.

Standard Calibration Precision Formula:

Precision % = ((CalibrationReading) / GasConcentration) * 100

Precision Calibration Precision Formula:

Calibration Gas Concentration: C
Average Difference: ((Reading1 - C) + (Reading2 - C) + (Reading3 - C)) / 3
Precision % = (Average Difference / C) * 100

Drift Percent - End of Day Drift Assessment Required to be within 10% of Calibration

ABC Coke

Calibrations for the Time Period From 01/01/2017 through 08/07/2018

Instrument:	TVA: 9262 - TVA 1000B
Date Calibrated:	07/19/2017 07:41:23
Calibration Type:	Precision
Pegged Rate:	10,000
Flow Rate:	
Technician:	1724 - Matt Case

Calibration Gases

Gas: 1001 - Airgas Lot Number 87-400377591-1

Certification Date 06/09/2014 — Concentration (ppm) 499.200 — Expiration Date 06/09/2019

Calibrations

Error Precision(%)*	-2.78	Passed	Readings (ppm)	487.000	481.000	488.000
Average Response Time (sec)	4.000	Passed	Response Time (sec)	4.000	4.000	4.000

Drift Assessments

Assessment Time 11:16:11

Error Precision(%)*	-4.45	Passed	Drift Reading (ppm)	477.000	Drift Percent (%)	-1.72 Passed
Average Response Time (sec)	4.00	Passed	Response Time (sec)	4.000		

Assessment Tech 1724 Matt Case

Assessment Time 15:16:30

Error Precision(%)*	-3.25	Passed	Drift Reading (ppm)	483.000	Drift Percent (%)	-0.48 Passed
Average Response Time (sec)	4.00	Passed	Response Time (sec)	4.000		

Assessment Tech 1724 Matt Case

Gas: 1002 - OSC2546

Certification Date 01/13/2016 — Concentration (ppm) 9.729.000 — Expiration Date 01/13/2019

Calibrations

Error Precision(%)*	0.70	Passed	Readings (ppm)	9.810.000	9.792.000	9.788.000
Average Response Time (sec)	4.000	Passed	Response Time (sec)	4.000	4.000	4.000

Drift Assessments

Assessment Time 15:17:36

Error Precision(%)*	0.56	Passed	Drift Reading (ppm)	9.783.000	Drift Percent (%)	-0.14 Passed
Average Response Time (sec)	4.00	Passed	Response Time (sec)	4.000		

Assessment Tech 1724 Matt Case

Assessment Time 15:17:58

Error Precision(%)*	0.74	Passed	Drift Reading (ppm)	9.801.000	Drift Percent (%)	0.04 Passed
Average Response Time (sec)	4.00	Passed	Response Time (sec)	4.000		

Assessment Tech 1724 Matt Case

Response Time - Acceptable Response Time should be 30 seconds or less from the time the calibration gas is introduced, to the time the instrument is equal to or less than +/- ten percent (<=10%)

Error Precision - Precision for the instrument is accepted when the average percent error is equal to or less than 10%.

Standard Calibration Precision Formula:

Precision % = ((CalibrationReading) / GasConcentration) * 100

Precision Calibration Precision Formula:

Calibration Gas Concentration: C
Average Difference: ((Reading1 - C) + (Reading2 - C) + (Reading3 - C)) / 3
Precision % = (Average Difference / C) * 100

Drift Percent - End of Day Drift Assessment Required to be within 10% of Calibration

ABC Coke

Calibrations for the Time Period From 01/01/2017 through 08/07/2018

Instrument:	TVA: 70805 - TVA 1000B
Date Calibrated:	07/19/2017 07:43:07
Calibration Type:	Precision
Pegged Rate:	10,000
Flow Rate:	
Technician:	1587 - Andrew Ficher

Calibration Gases

Gas: 1001 - Airgas Lot Number 87-400377591-1

Certification Date 06/09/2014 | Concentration (ppm) 499.200 | Expiration Date 06/09/2019

Calibrations

Error Precision(%)*	-7.52	Passed	Readings (ppm)	465.000	461.000	459.000
Average Response Time (sec)	3.000	Passed	Response Time (sec)	3.000	3.000	3.000

Drift Assessments

Assessment Time 11:20:38

Error Precision(%)*	-6.65	Passed	Drift Reading (ppm)	466.000	Drift Percent (%)	0.94	Passed
Average Response Time (sec)	3.00	Passed	Response Time (sec)	3.000			

Assessment Tech 1587 Andrew Ficher

Assessment Time 15:14:49

Error Precision(%)*	-7.65	Passed	Drift Reading (ppm)	461.000	Drift Percent (%)	-0.14	Passed
Average Response Time (sec)	4.00	Passed	Response Time (sec)	4.000			

Assessment Tech 1587 Andrew Ficher

Gas: 1002 - OSC2546

Certification Date 01/13/2016 | Concentration (ppm) 9,729.000 | Expiration Date 01/13/2019

Calibrations

Error Precision(%)*	-3.98	Passed	Readings (ppm)	9,345.000	9,332.000	9,349.000
Average Response Time (sec)	5.000	Passed	Response Time (sec)	5.000	5.000	5.000

Drift Assessments

Assessment Time 11:21:16

Error Precision(%)*	-3.84	Passed	Drift Reading (ppm)	9,355.000	Drift Percent (%)	0.14	Passed
Average Response Time (sec)	5.00	Passed	Response Time (sec)	5.000			

Assessment Tech 1587 Andrew Ficher

Assessment Time 15:14:05

Error Precision(%)*	-3.92	Passed	Drift Reading (ppm)	9,348.000	Drift Percent (%)	0.06	Passed
Average Response Time (sec)	4.00	Passed	Response Time (sec)	4.000			

Assessment Tech 1587 Andrew Ficher

Response Time - Acceptable Response Time should be 30 seconds or less from the time the calibration gas is introduced, to the time the instrument is equal to or less than +/- ten percent (<=10%)

Error Precision - Precision for the instrument is accepted when the average percent error is equal to or less than 10%.

Standard Calibration Precision Formula:

Precision % = ((CalibrationReading) / GasConcentration) * 100

Precision Calibration Precision Formula:

Calibration Gas Concentration: C
Average Difference: ((Reading1 - C) + (Reading2 - C) + (Reading3 - C)) / 3
Precision % = (Average Difference / C) * 100

Drift Percent - End of Day Drift Assessment Required to be within 10% of Calibration.

ABC Coke

Calibrations for the Time Period From 01/01/2017 through 08/07/2018

Instrument:	TVA: 9262 - TVA 1000B
Date Calibrated:	08/22/2017 08:10:10
Calibration Type:	Precision
Pegged Rate:	10,000
Flow Rate:	
Technician:	1724 - Matt Case

Calibration Gases

Gas: 1001 - Airgas Lot Number 87-400377591-1

Certification Date 06/09/2014 Concentration (ppm) 499.200 Expiration Date 06/09/2019

Calibrations

Error Precision(%)*	4.03	Passed	Readings (ppm)	523.000	517.000	518.000
Average Response Time (sec)	4.000	Passed	Response Time (sec)	4.000	4.000	4.000

Drift Assessments

Assessment Time 11:34:03

Error Precision(%)*	2.36	Passed	Drift Reading (ppm)	511.000	Drift Percent (%)	-1.60 Passed
Average Response Time (sec)	4.00	Passed	Response Time (sec)	4.000		

Assessment Tech 1724 Matt Case

Assessment Time 15:34:28

Error Precision(%)*	3.17	Passed	Drift Reading (ppm)	515.000	Drift Percent (%)	-0.83 Passed
Average Response Time (sec)	4.00	Passed	Response Time (sec)	4.000		

Assessment Tech 1670 Mike Bean

Gas: 1002 - OSC2546

Certification Date 01/13/2016 Concentration (ppm) 9.729.000 Expiration Date 01/13/2019

Calibrations

Error Precision(%)*	0.97	Passed	Readings (ppm)	9.827.000	9.811.000	9.831.000
Average Response Time (sec)	4.000	Passed	Response Time (sec)	4.000	4.000	4.000

Drift Assessments

Assessment Time 11:35:22

Error Precision(%)*	1.36	Passed	Drift Reading (ppm)	9.861.000	Drift Percent (%)	0.39 Passed
Average Response Time (sec)	4.00	Passed	Response Time (sec)	4.000		

Assessment Tech 1724 Matt Case

Assessment Time 15:35:43

Error Precision(%)*	1.13	Passed	Drift Reading (ppm)	9.839.000	Drift Percent (%)	0.16 Passed
Average Response Time (sec)	4.00	Passed	Response Time (sec)	4.000		

Assessment Tech 1724 Matt Case

Response Time - Acceptable Response Time should be 30 seconds or less from the time the calibration gas is introduced, to the time the instrument is equal to or less than +/- ten percent (<=10%)

Error Precision - Precision for the instrument is accepted when the average percent error is equal to or less than 10%.

Standard Calibration Precision Formula:

Precision % = ((CalibrationReading) / GasConcentration) * 100

Precision Calibration Precision Formula:

Calibration Gas Concentration: C
Average Difference: ((Reading1 - C) + (Reading2 - C) + (Reading3 - C)) / 3
Precision % = (Average Difference / C) * 100

Drift Percent - End of Day Drift Assessment Required to be within 10% of Calibration.

ABC Coke

Calibrations for the Time Period From 01/01/2017 through 08/07/2018

Instrument:	TVA: 70805 - TVA 1000B
Date Calibrated:	08/22/2017 08:11:18
Calibration Type:	Precision
Pegged Rate:	10,000
Flow Rate:	
Technician:	1587 - Andrew Ficher

Calibration Gases

Gas: 1001 - Airgas Lot Number 87-400377591-1

Certification Date 06/09/2014 | Concentration (ppm) 499.200 | Expiration Date 06/09/2019

Calibrations

Error Precision(%)*	-6.25	Passed	Readings (ppm)	471.000	465.000	468.000
Average Response Time (sec)	4.000	Passed	Response Time (sec)	4.000	4.000	4.000

Drift Assessments

Assessment Time 11:28:30

Error Precision(%)*	-5.05	Passed	Drift Reading (ppm)	474.000	Drift Percent (%)	1.28	Passed
Average Response Time (sec)	4.00	Passed	Response Time (sec)	4.000			

Assessment Tech 1587 Andrew Ficher

Assessment Time 15:30:02

Error Precision(%)*	-5.45	Passed	Drift Reading (ppm)	472.000	Drift Percent (%)	0.85	Passed
Average Response Time (sec)	4.00	Passed	Response Time (sec)	4.000			

Assessment Tech 1587 Andrew Ficher

Gas: 1002 - OSC2546

Certification Date 01/13/2016 | Concentration (ppm) 9,729.000 | Expiration Date 01/13/2019

Calibrations

Error Precision(%)*	-3.70	Passed	Readings (ppm)	9,382.000	9,359.000	9,366.000
Average Response Time (sec)	4.000	Passed	Response Time (sec)	4.000	4.000	4.000

Drift Assessments

Assessment Time 11:32:18

Error Precision(%)*	-3.50	Passed	Drift Reading (ppm)	9,388.000	Drift Percent (%)	0.20	Passed
Average Response Time (sec)	4.00	Passed	Response Time (sec)	4.000			

Assessment Tech 1587 Andrew Ficher

Assessment Time 15:32:49

Error Precision(%)*	-3.32	Passed	Drift Reading (ppm)	9,406.000	Drift Percent (%)	0.39	Passed
Average Response Time (sec)	4.00	Passed	Response Time (sec)	4.000			

Assessment Tech 1587 Andrew Ficher

Response Time - Acceptable Response Time should be 30 seconds or less from the time the calibration gas is introduced, to the time the instrument is equal to or less than +/- ten percent (<=10%)

Error Precision - Precision for the instrument is accepted when the average percent error is equal to or less than 10%.

Standard Calibration Precision Formula:

Precision % = ((CalibrationReading) / GasConcentration) * 100

Precision Calibration Precision Formula:

Calibration Gas Concentration: C
Average Difference: ((Reading1 - C) + (Reading2 - C) + (Reading3 - C)) / 3
Precision % = (Average Difference / C) * 100

Drift Percent - End of Day Drift Assessment Required to be within 10% of Calibration.

ABC Coke

Calibrations for the Time Period From 01/01/2017 through 08/07/2018

Instrument:	TVA: 730425602 - TVA 1000B
Date Calibrated:	09/19/2017 08:03:11
Calibration Type:	Precision
Pegged Rate:	10,000
Flow Rate:	
Technician:	1724 - Matt Case

Calibration Gases

Gas: 1001 - Airgas Lot Number 87-400377591-1

Certification Date 06/09/2014 — Concentration (ppm) 499.200 — Expiration Date 06/09/2019

Calibrations

Error Precision(%)*	4.10	Passed	Readings (ppm)	524.000	519.000	516.000
Average Response Time (sec)	4.000	Passed	Response Time (sec)	4.000	4.000	4.000

Drift Assessments

Assessment Time 11:06:29

Error Precision(%)*	5.97	Passed	Drift Reading (ppm)	529.000	Drift Percent (%)	1.80 Passed
Average Response Time (sec)	4.00	Passed	Response Time (sec)	4.000		

Assessment Tech 1724 Matt Case

Assessment Time 15:06:45

Error Precision(%)*	4.77	Passed	Drift Reading (ppm)	523.000	Drift Percent (%)	0.64 Passed
Average Response Time (sec)	4.00	Passed	Response Time (sec)	4.000		

Assessment Tech 1724 Matt Case

Gas: 1002 - OSC2546

Certification Date 01/13/2016 — Concentration (ppm) 9.729.000 — Expiration Date 01/13/2019

Calibrations

Error Precision(%)*	0.67	Passed	Readings (ppm)	9.813.000	9.779.000	9.791.000
Average Response Time (sec)	4.000	Passed	Response Time (sec)	4.000	4.000	4.000

Drift Assessments

Assessment Time 11:07:39

Error Precision(%)*	0.09	Passed	Drift Reading (ppm)	9.738.000	Drift Percent (%)	-0.58 Passed
Average Response Time (sec)	4.00	Passed	Response Time (sec)	4.000		

Assessment Tech 1724 Matt Case

Assessment Time 15:08:04

Error Precision(%)*	0.24	Passed	Drift Reading (ppm)	9.752.000	Drift Percent (%)	-0.43 Passed
Average Response Time (sec)	4.00	Passed	Response Time (sec)	4.000		

Assessment Tech 1724 Matt Case

Response Time - Acceptable Response Time should be 30 seconds or less from the time the calibration gas is introduced, to the time the instrument is equal to or less than +/- ten percent (<=10%)

Error Precision - Precision for the instrument is accepted when the average percent error is equal to or less than 10%.

Standard Calibration Precision Formula:

Precision % = ((CalibrationReading) / GasConcentration) * 100

Precision Calibration Precision Formula:

Calibration Gas Concentration: C
Average Difference: ((Reading1 - C) + (Reading2 - C) + (Reading3 - C)) / 3
Precision % = (Average Difference / C) * 100

Drift Percent - End of Day Drift Assessment Required to be within 10% of Calibration

ABC Coke

Calibrations for the Time Period From 01/01/2017 through 08/07/2018

Instrument:	TVA: 70805 - TVA 1000B
Date Calibrated:	09/19/2017 08:04:52
Calibration Type:	Precision
Pegged Rate:	10,000
Flow Rate:	
Technician:	1587 - Andrew Ficher

Calibration Gases

Gas: 1001 - Airgas Lot Number 87-400377591-1

Certification Date 06/09/2014 Concentration (ppm) 499.200 Expiration Date 06/09/2019

Calibrations

Error Precision(%)*	-6.18	Passed	Readings (ppm)	465.000	468.000	472.000
Average Response Time (sec)	4.000	Passed	Response Time (sec)	4.000	4.000	4.000

Drift Assessments

Assessment Time 11:03:34

Error Precision(%)*	-7.65	Passed	Drift Reading (ppm)	461.000	Drift Percent (%)	-1.57	Passed
Average Response Time (sec)	4.00	Passed	Response Time (sec)	4.000			

Assessment Tech 1587 Andrew Ficher

Assessment Time 15:03:57

Error Precision(%)*	-6.65	Passed	Drift Reading (ppm)	466.000	Drift Percent (%)	-0.50	Passed
Average Response Time (sec)	4.00	Passed	Response Time (sec)	4.000			

Assessment Tech 1587 Andrew Ficher

Gas: 1002 - OSC2546

Certification Date 01/13/2016 Concentration (ppm) 9,729.000 Expiration Date 01/13/2019

Calibrations

Error Precision(%)*	-3.29	Passed	Readings (ppm)	9,424.000	9,396.000	9,407.000
Average Response Time (sec)	4.000	Passed	Response Time (sec)	4.000	4.000	4.000

Drift Assessments

Assessment Time 11:05:05

Error Precision(%)*	-3.27	Passed	Drift Reading (ppm)	9,411.000	Drift Percent (%)	0.02	Passed
Average Response Time (sec)	4.00	Passed	Response Time (sec)	4.000			

Assessment Tech 1587 Andrew Ficher

Assessment Time 15:05:38

Error Precision(%)*	-3.21	Passed	Drift Reading (ppm)	9,417.000	Drift Percent (%)	0.09	Passed
Average Response Time (sec)	4.00	Passed	Response Time (sec)	4.000			

Assessment Tech 1587 Andrew Ficher

Response Time - Acceptable Response Time should be 30 seconds or less from the time the calibration gas is introduced, to the time the instrument is equal to or less than +/- ten percent (<=10%)

Error Precision - Precision for the instrument is accepted when the average percent error is equal to or less than 10%.

Standard Calibration Precision Formula:

Precision % = ((CalibrationReading) / GasConcentration) * 100

Precision Calibration Precision Formula:

Calibration Gas Concentration: C
Average Difference: ((Reading1 - C) + (Reading2 - C) + (Reading3 - C)) / 3
Precision % = (Average Difference / C) * 100

Drift Percent - End of Day Drift Assessment Required to be within 10% of Calibration.

ABC Coke

Calibrations for the Time Period From 01/01/2017 through 08/07/2018

Instrument:	TVA: 9269 - TVA 1000B
Date Calibrated:	10/17/2017 07:46:28
Calibration Type:	Precision
Pegged Rate:	10,000
Flow Rate:	
Technician:	1724 - Matt Case

Calibration Gases

Gas: 1001 - Airgas Lot Number 87-400377591-1

Certification Date 06/09/2014 — Concentration (ppm) 499.200 — Expiration Date 06/09/2019

Calibrations

Error Precision(%)*	-4.51	Passed	Readings (ppm)	481.000	477.000	472.000
Average Response Time (sec)	4.000	Passed	Response Time (sec)	4.000	4.000	4.000

Drift Assessments

Assessment Time 11:41:42

Error Precision(%)*	-4.65	Passed	Drift Reading (ppm)	476.000	Drift Percent (%)	-0.14 Passed
Average Response Time (sec)	4.00	Passed	Response Time (sec)	4.000		

Assessment Tech 1724 Matt Case

Assessment Time 14:42:08

Error Precision(%)*	-4.05	Passed	Drift Reading (ppm)	479.000	Drift Percent (%)	0.49 Passed
Average Response Time (sec)	4.00	Passed	Response Time (sec)	4.000		

Assessment Tech 1724 Matt Case

Gas: 1002 - OSC2546

Certification Date 01/13/2016 — Concentration (ppm) 9,729.000 — Expiration Date 01/13/2019

Calibrations

Error Precision(%)*	1.67	Passed	Readings (ppm)	9,878.000	9,882.000	9,914.000
Average Response Time (sec)	4.000	Passed	Response Time (sec)	4.000	4.000	4.000

Drift Assessments

Assessment Time 11:43:18

Error Precision(%)*	1.94	Passed	Drift Reading (ppm)	9,918.000	Drift Percent (%)	0.27 Passed
Average Response Time (sec)	4.00	Passed	Response Time (sec)	4.000		

Assessment Tech 1724 Matt Case

Assessment Time 14:43:39

Error Precision(%)*	1.79	Passed	Drift Reading (ppm)	9,903.000	Drift Percent (%)	0.12 Passed
Average Response Time (sec)	4.00	Passed	Response Time (sec)	4.000		

Assessment Tech 1724 Matt Case

Response Time - Acceptable Response Time should be 30 seconds or less from the time the calibration gas is introduced, to the time the instrument is equal to or less than +/- ten percent (<=10%)

Error Precision - Precision for the instrument is accepted when the average percent error is equal to or less than 10%.

Standard Calibration Precision Formula:

Precision % = ((CalibrationReading) / GasConcentration) * 100

Precision Calibration Precision Formula:

Calibration Gas Concentration: C
Average Difference: ((Reading1 - C) + (Reading2 - C) + (Reading3 - C)) / 3
Precision % = (Average Difference / C) * 100

Drift Percent - End of Day Drift Assessment Required to be within 10% of Calibration

ABC Coke

Calibrations for the Time Period From 01/01/2017 through 08/07/2018

Instrument:	TVA: 70805 - TVA 1000B
Date Calibrated:	10/17/2017 07:53:26
Calibration Type:	Precision
Pegged Rate:	10,000
Flow Rate:	
Technician:	1587 - Andrew Ficher

Calibration Gases

Gas: 1001 - Airgas Lot Number 87-400377591-1

Certification Date 06/09/2014 | Concentration (ppm) 499.200 | Expiration Date 06/09/2019

Calibrations

Error Precision(%)*	-6.72	Passed	Readings (ppm)	464.000	468.000	465.000
Average Response Time (sec)	4.000	Passed	Response Time (sec)	4.000	4.000	4.000

Drift Assessments

Assessment Time 11:44:31

Error Precision(%)*	-7.65	Passed	Drift Reading (ppm)	461.000	Drift Percent (%)	-1.00 Passed
Average Response Time (sec)	4.00	Passed	Response Time (sec)	4.000		

Assessment Tech 1587 Andrew Ficher

Assessment Time 14:44:49

Error Precision(%)*	-4.65	Passed	Drift Reading (ppm)	476.000	Drift Percent (%)	2.22 Passed
Average Response Time (sec)	4.00	Passed	Response Time (sec)	4.000		

Assessment Tech 1587 Andrew Ficher

Gas: 1002 - OSC2546

Certification Date 01/13/2016 | Concentration (ppm) 9,729.000 | Expiration Date 01/13/2019

Calibrations

Error Precision(%)*	-3.32	Passed	Readings (ppm)	9,396.000	9,413.000	9,409.000
Average Response Time (sec)	4.000	Passed	Response Time (sec)	4.000	4.000	4.000

Drift Assessments

Assessment Time 14:46:06

Error Precision(%)*	-3.47	Passed	Drift Reading (ppm)	9,391.000	Drift Percent (%)	-0.16 Passed
Average Response Time (sec)	4.00	Passed	Response Time (sec)	4.000		

Assessment Tech 1587 Andrew Ficher

Assessment Time 14:46:20

Error Precision(%)*	-3.55	Passed	Drift Reading (ppm)	9,384.000	Drift Percent (%)	-0.23 Passed
Average Response Time (sec)	4.00	Passed	Response Time (sec)	4.000		

Assessment Tech 1587 Andrew Ficher

Response Time - Acceptable Response Time should be 30 seconds or less from the time the calibration gas is introduced, to the time the instrument is equal to or less than +/- ten percent (<=10%)

Error Precision - Precision for the instrument is accepted when the average percent error is equal to or less than 10%.

Standard Calibration Precision Formula:

Precision % = ((CalibrationReading) / GasConcentration) * 100

Precision Calibration Precision Formula:

Calibration Gas Concentration: C
Average Difference: ((Reading1 - C) + (Reading2 - C) + (Reading3 - C)) / 3
Precision % = (Average Difference / C) * 100

Drift Percent - End of Day Drift Assessment Required to be within 10% of Calibration

ABC Coke

Calibrations for the Time Period From 01/01/2017 through 08/07/2018

Instrument:	TVA: 9269 - TVA 1000B
Date Calibrated:	11/14/2017 07:20:06
Calibration Type:	Precision
Pegged Rate:	10,000
Flow Rate:	
Technician:	1724 - Matt Case

Calibration Gases

Gas: 1001 - Airgas Lot Number 87-400377591-1

Certification Date 06/09/2014 — Concentration (ppm) 499.200 — Expiration Date 06/09/2019

Calibrations

Error Precision(%)*	-2.31	Passed	Readings (ppm)	489.000	481.000	493.000
Average Response Time (sec)	4.000	Passed	Response Time (sec)	4.000	4.000	4.000

Drift Assessments

Assessment Time 11:08:44

Error Precision(%)*	-4.05	Passed	Drift Reading (ppm)	479.000	Drift Percent (%)	-1.78 Passed
Average Response Time (sec)	4.00	Passed	Response Time (sec)	4.000		

Assessment Tech 1724 Matt Case

Assessment Time 15:09:29

Error Precision(%)*	-2.44	Passed	Drift Reading (ppm)	487.000	Drift Percent (%)	-0.14 Passed
Average Response Time (sec)	4.00	Passed	Response Time (sec)	4.000		

Assessment Tech 1724 Matt Case

Gas: 1002 - OSC2546

Certification Date 01/13/2016 — Concentration (ppm) 9,729.000 — Expiration Date 01/13/2019

Calibrations

Error Precision(%)*	0.91	Passed	Readings (ppm)	9,871.000	9,759.000	9,822.000
Average Response Time (sec)	4.000	Passed	Response Time (sec)	4.000	4.000	4.000

Drift Assessments

Assessment Time 11:10:45

Error Precision(%)*	1.11	Passed	Drift Reading (ppm)	9,837.000	Drift Percent (%)	0.20 Passed
Average Response Time (sec)	4.00	Passed	Response Time (sec)	4.000		

Assessment Tech 1724 Matt Case

Assessment Time 15:11:05

Error Precision(%)*	0.20	Passed	Drift Reading (ppm)	9,748.000	Drift Percent (%)	-0.71 Passed
Average Response Time (sec)	4.00	Passed	Response Time (sec)	4.000		

Assessment Tech 1724 Matt Case

Response Time - Acceptable Response Time should be 30 seconds or less from the time the calibration gas is introduced, to the time the instrument is equal to or less than +/- ten percent (<=10%)

Error Precision - Precision for the instrument is accepted when the average percent error is equal to or less than 10%.

Standard Calibration Precision Formula:

Precision % = ((CalibrationReading) / GasConcentration) * 100

Precision Calibration Precision Formula:

Calibration Gas Concentration: C
Average Difference: ((Reading1 - C) + (Reading2 - C) + (Reading3 - C)) / 3
Precision % = (Average Difference / C) * 100

Drift Percent - End of Day Drift Assessment Required to be within 10% of Calibration.

ABC Coke

Calibrations for the Time Period From 01/01/2017 through 08/07/2018

Instrument:	TVA: 70803 - TVA1000B
Date Calibrated:	11/14/2017 08:44:31
Calibration Type:	Precision
Pegged Rate:	10,000
Flow Rate:	
Technician:	1587 - Andrew Ficher

Calibration Gases

Gas: 1001 - Airgas Lot Number 87-400377591-1

Certification Date 06/09/2014 | Concentration (ppm) 499.200 | Expiration Date 06/09/2019

Calibrations

Error Precision(%)*	-7.45	Passed	Readings (ppm)	461.000	459.000	466.000
Average Response Time (sec)	4.000	Passed	Response Time (sec)	4.000	4.000	4.000

Drift Assessments

Assessment Time 11:05:44

Error Precision(%)*	-6.25	Passed	Drift Reading (ppm)	468.000	Drift Percent (%)	1.30 Passed
Average Response Time (sec)	4.00	Passed	Response Time (sec)	4.000		

Assessment Tech 1587 Andrew Ficher

Assessment Time 15:06:06

Error Precision(%)*	-7.45	Passed	Drift Reading (ppm)	462.000	Drift Percent (%)	0.00 Passed
Average Response Time (sec)	4.00	Passed	Response Time (sec)	4.000		

Assessment Tech 1587 Andrew Ficher

Gas: 1002 - OSC2546

Certification Date 01/13/2016 | Concentration (ppm) 9,729.000 | Expiration Date 01/13/2019

Calibrations

Error Precision(%)*	-3.57	Passed	Readings (ppm)	9,389.000	9,382.000	9,375.000
Average Response Time (sec)	4.000	Passed	Response Time (sec)	4.000	4.000	4.000

Drift Assessments

Assessment Time 11:07:15

Error Precision(%)*	-3.47	Passed	Drift Reading (ppm)	9,391.000	Drift Percent (%)	0.10 Passed
Average Response Time (sec)	4.00	Passed	Response Time (sec)	4.000		

Assessment Tech 1587 Andrew Ficher

Assessment Time 15:07:36

Error Precision(%)*	-3.32	Passed	Drift Reading (ppm)	9,406.000	Drift Percent (%)	0.26 Passed
Average Response Time (sec)	4.00	Passed	Response Time (sec)	4.000		

Assessment Tech 1587 Andrew Ficher

Response Time - Acceptable Response Time should be 30 seconds or less from the time the calibration gas is introduced, to the time the instrument is equal to or less than +/- ten percent (<=10%)

Error Precision - Precision for the instrument is accepted when the average percent error is equal to or less than 10%.

Standard Calibration Precision Formula:

Precision % = ((CalibrationReading) / GasConcentration) * 100

Precision Calibration Precision Formula:

Calibration Gas Concentration: C
Average Difference: ((Reading1 - C) + (Reading2 - C) + (Reading3 - C)) / 3
Precision % = (Average Difference / C) * 100

Drift Percent - End of Day Drift Assessment Required to be within 10% of Calibration

ABC Coke

Calibrations for the Time Period From 01/01/2017 through 08/07/2018

Instrument:	TVA: 9269 - TVA 1000B
Date Calibrated:	12/12/2017 08:27:29
Calibration Type:	Precision
Pegged Rate:	10,000
Flow Rate:	
Technician:	1724 - Matt Case

Calibration Gases

Gas: 1001 - Airgas Lot Number 87-400377591-1

Certification Date 06/09/2014 — Concentration (ppm) 499.200 — Expiration Date 06/09/2019

Calibrations

Error Precision(%)*	2.43	Passed	Readings (ppm)	514.000	509.000	511.000
Average Response Time (sec)	4.000	Passed	Response Time (sec)	4.000	4.000	4.000

Drift Assessments

Assessment Time 11:37:22

Error Precision(%)*	3.97	Passed	Drift Reading (ppm)	519.000	Drift Percent (%)	1.50 Passed
Average Response Time (sec)	4.00	Passed	Response Time (sec)	4.000		

Assessment Tech 1724 Matt Case

Assessment Time 15:37:43

Error Precision(%)*	2.96	Passed	Drift Reading (ppm)	514.000	Drift Percent (%)	0.52 Passed
Average Response Time (sec)	4.00	Passed	Response Time (sec)	4.000		

Assessment Tech 1724 Matt Case

Gas: 1002 - OSC2546

Certification Date 01/13/2016 — Concentration (ppm) 9,729.000 — Expiration Date 01/13/2019

Calibrations

Error Precision(%)*	1.06	Passed	Readings (ppm)	9,823.000	9,845.000	9,829.000
Average Response Time (sec)	4.000	Passed	Response Time (sec)	4.000	4.000	4.000

Drift Assessments

Assessment Time 11:38:44

Error Precision(%)*	1.25	Passed	Drift Reading (ppm)	9,851.000	Drift Percent (%)	0.19 Passed
Average Response Time (sec)	4.00	Passed	Response Time (sec)	4.000		

Assessment Tech 1724 Matt Case

Assessment Time 15:39:08

Error Precision(%)*	1.12	Passed	Drift Reading (ppm)	9,838.000	Drift Percent (%)	0.06 Passed
Average Response Time (sec)	4.00	Passed	Response Time (sec)	4.000		

Assessment Tech 1724 Matt Case

Response Time - Acceptable Response Time should be 30 seconds or less from the time the calibration gas is introduced, to the time the instrument is equal to or less than +/- ten percent (<=10%)

Error Precision - Precision for the instrument is accepted when the average percent error is equal to or less than 10%.

Standard Calibration Precision Formula:

Precision % = ((CalibrationReading) / GasConcentration) * 100

Precision Calibration Precision Formula:

Calibration Gas Concentration: C
Average Difference: ((Reading1 - C) + (Reading2 - C) + (Reading3 - C)) / 3
Precision % = (Average Difference / C) * 100

Drift Percent - End of Day Drift Assessment Required to be within 10% of Calibration

ABC Coke

Calibrations for the Time Period From 01/01/2017 through 08/07/2018

Instrument:	TVA: 70803 - TVA1000B
Date Calibrated:	12/12/2017 08:29:02
Calibration Type:	Precision
Pegged Rate:	10,000
Flow Rate:	
Technician:	1587 - Andrew Ficher

Calibration Gases

Gas: 1001 - Airgas Lot Number 87-400377591-1

Certification Date 06/09/2014 | Concentration (ppm) 499.200 | Expiration Date 06/09/2019

Calibrations

Error Precision(%)*	-6.85	Passed	Readings (ppm)	462.000	466.000	467.000
Average Response Time (sec)	4.000	Passed	Response Time (sec)	4.000	4.000	4.000

Drift Assessments

Assessment Time 11:40:04

Error Precision(%)*	-7.65	Passed	Drift Reading (ppm)	461.000	Drift Percent (%)	-0.86 Passed
Average Response Time (sec)	4.00	Passed	Response Time (sec)	4.000		

Assessment Tech 1587 Andrew Ficher

Assessment Time 15:40:24

Error Precision(%)*	-6.25	Passed	Drift Reading (ppm)	468.000	Drift Percent (%)	0.65 Passed
Average Response Time (sec)	4.00	Passed	Response Time (sec)	4.000		

Assessment Tech 1587 Andrew Ficher

Gas: 1002 - OSC2546

Certification Date 01/13/2016 | Concentration (ppm) 9,729.000 | Expiration Date 01/13/2019

Calibrations

Error Precision(%)*	-2.86	Passed	Readings (ppm)	9,451.000	9,447.000	9,453.000
Average Response Time (sec)	4.000	Passed	Response Time (sec)	4.000	4.000	4.000

Drift Assessments

Assessment Time 11:41:43

Error Precision(%)*	-2.98	Passed	Drift Reading (ppm)	9,439.000	Drift Percent (%)	-0.12 Passed
Average Response Time (sec)	4.00	Passed	Response Time (sec)	4.000		

Assessment Tech 1587 Andrew Ficher

Assessment Time 15:42:07

Error Precision(%)*	-2.90	Passed	Drift Reading (ppm)	9,447.000	Drift Percent (%)	-0.04 Passed
Average Response Time (sec)	4.00	Passed	Response Time (sec)	4.000		

Assessment Tech 1587 Andrew Ficher

Response Time - Acceptable Response Time should be 30 seconds or less from the time the calibration gas is introduced, to the time the instrument is equal to or less than +/- ten percent (<=10%)

Error Precision - Precision for the instrument is accepted when the average percent error is equal to or less than 10%.

Standard Calibration Precision Formula:

Precision % = ((CalibrationReading) / GasConcentration) * 100

Precision Calibration Precision Formula:

Calibration Gas Concentration: C
Average Difference: ((Reading1 - C) + (Reading2 - C) + (Reading3 - C)) / 3
Precision % = (Average Difference / C) * 100

Drift Percent - End of Day Drift Assessment Required to be within 10% of Calibration

ABC Coke

Calibrations for the Time Period From 01/01/2017 through 08/07/2018

Instrument:	TVA: 70803 - TVA1000B
Date Calibrated:	01/23/2018 07:34:47
Calibration Type:	Precision
Pegged Rate:	10,000
Flow Rate:	
Technician:	1587 - Andrew Ficher

Calibration Gases

Gas: 1001 - Airgas Lot Number 87-400377591-1

Certification Date 06/09/2014 — Concentration (ppm) 499.200 — Expiration Date 06/09/2019

Calibrations

Error Precision(%)*	-7.12	Passed	Readings (ppm)	462.000	466.000	463.000
Average Response Time (sec)	4.000	Passed	Response Time (sec)	4.000	4.000	4.000

Drift Assessments

Assessment Time 11:43:58

Error Precision(%)*	-8.05	Passed	Drift Reading (ppm)	459.000	Drift Percent (%)	-1.01 Passed
Average Response Time (sec)	4.00	Passed	Response Time (sec)	4.000		

Assessment Tech 1587 Andrew Ficher

Assessment Time 14:44:22

Error Precision(%)*	-6.45	Passed	Drift Reading (ppm)	467.000	Drift Percent (%)	0.72 Passed
Average Response Time (sec)	4.00	Passed	Response Time (sec)	4.000		

Assessment Tech 1587 Andrew Ficher

Gas: 1002 - OSC2546

Certification Date 01/13/2016 — Concentration (ppm) 9,729.000 — Expiration Date 01/13/2019

Calibrations

Error Precision(%)*	-3.03	Passed	Readings (ppm)	9,448.000	9,420.000	9,434.000
Average Response Time (sec)	4.000	Passed	Response Time (sec)	4.000	4.000	4.000

Drift Assessments

Assessment Time 11:46:06

Error Precision(%)*	-2.85	Passed	Drift Reading (ppm)	9,452.000	Drift Percent (%)	0.19 Passed
Average Response Time (sec)	4.00	Passed	Response Time (sec)	4.000		

Assessment Tech 1587 Andrew Ficher

Assessment Time 14:46:38

Error Precision(%)*	-2.65	Passed	Drift Reading (ppm)	9,471.000	Drift Percent (%)	0.39 Passed
Average Response Time (sec)	4.00	Passed	Response Time (sec)	4.000		

Assessment Tech 1587 Andrew Ficher

Response Time - Acceptable Response Time should be 30 seconds or less from the time the calibration gas is introduced, to the time the instrument is equal to or less than +/- ten percent (<=10%)

Error Precision - Precision for the instrument is accepted when the average percent error is equal to or less than 10%.

Standard Calibration Precision Formula:

Precision % = ((CalibrationReading) / GasConcentration) * 100

Precision Calibration Precision Formula:

Calibration Gas Concentration: C
Average Difference: ((Reading1 - C) + (Reading2 - C) + (Reading3 - C)) / 3
Precision % = (Average Difference / C) * 100

Drift Percent - End of Day Drift Assessment Required to be within 10% of Calibration.

ABC Coke

Calibrations for the Time Period From 01/01/2017 through 08/07/2018

Instrument:	TVA: 9269 - TVA 1000B
Date Calibrated:	01/23/2018 07:36:52
Calibration Type:	Precision
Pegged Rate:	10,000
Flow Rate:	
Technician:	1906 - Brent Birdwell

Calibration Gases

Gas: 1001 - Airgas Lot Number 87-400377591-1

Certification Date 06/09/2014 — Concentration (ppm) 499.200 — Expiration Date 06/09/2019

Calibrations

Error Precision(%)*	-0.04	Passed	Readings (ppm)	497.000	499.000	501.000
Average Response Time (sec)	4.000	Passed	Response Time (sec)	4.000	4.000	4.000

Drift Assessments

Assessment Time 11:00:00							
Error Precision(%)*	-1.04	Passed	Drift Reading (ppm)	494.000	Drift Percent (%)	-1.00	Passed
Average Response Time (sec)	4.00	Passed	Response Time (sec)	4.000			
Assessment Tech 1906 Brent Birdwell							
Assessment Time 14:00:00							
Error Precision(%)*	-0.04	Passed	Drift Reading (ppm)	499.000	Drift Percent (%)	0.00	Passed
Average Response Time (sec)	4.00	Passed	Response Time (sec)	4.000			
Assessment Tech 1906 Brent Birdwell							

Gas: 1002 - OSC2546

Certification Date 01/13/2016 — Concentration (ppm) 9,729.000 — Expiration Date 01/13/2019

Calibrations

Error Precision(%)*	-0.47	Passed	Readings (ppm)	9,680.000	9,687.000	9,683.000
Average Response Time (sec)	5.000	Passed	Response Time (sec)	5.000	5.000	5.000

Drift Assessments

Assessment Time 11:00:00							
Error Precision(%)*	-0.50	Passed	Drift Reading (ppm)	9,680.000	Drift Percent (%)	-0.03	Passed
Average Response Time (sec)	5.00	Passed	Response Time (sec)	5.000			
Assessment Tech 1906 Brent Birdwell							
Assessment Time 14:00:00							
Error Precision(%)*	-0.42	Passed	Drift Reading (ppm)	9,688.000	Drift Percent (%)	0.05	Passed
Average Response Time (sec)	5.00	Passed	Response Time (sec)	5.000			
Assessment Tech 1906 Brent Birdwell							

Response Time - Acceptable Response Time should be 30 seconds or less from the time the calibration gas is introduced, to the time the instrument is equal to or less than +/- ten percent (<=10%)

Error Precision - Precision for the instrument is accepted when the average percent error is equal to or less than 10%.

Standard Calibration Precision Formula:

Precision % = ((CalibrationReading) / GasConcentration) * 100

Precision Calibration Precision Formula:

Calibration Gas Concentration: C
Average Difference: ((Reading1 - C) + (Reading2 - C) + (Reading3 - C)) / 3
Precision % = (Average Difference / C) * 100

Drift Percent - End of Day Drift Assessment Required to be within 10% of Calibration.

ABC Coke

Calibrations for the Time Period From 01/01/2017 through 08/07/2018

Instrument:	TVA: 70805 - TVA 1000B
Date Calibrated:	02/15/2018 07:58:34
Calibration Type:	Precision
Pegged Rate:	10,000
Flow Rate:	
Technician:	1799 - David Crowe

Calibration Gases

Gas: 1001 - Airgas Lot Number 87-400377591-1

Certification Date 06/09/2014 | Concentration (ppm) 499.200 | Expiration Date 06/09/2019

Calibrations

Error Precision(%)*	-5.05	Passed	Readings (ppm)	475.000	468.000	479.000
Average Response Time (sec)	3.670	Passed	Response Time (sec)	4.000	3.000	4.000

Drift Assessments

Assessment Time 11:38:53

Error Precision(%)*	-5.65	Passed	Drift Reading (ppm)	471.000	Drift Percent (%)	-0.63 Passed
Average Response Time (sec)	4.00	Passed	Response Time (sec)	4.000		

Assessment Tech 1799 David Crowe

Assessment Time 15:27:21

Error Precision(%)*	-3.25	Passed	Drift Reading (ppm)	483.000	Drift Percent (%)	1.90 Passed
Average Response Time (sec)	4.00	Passed	Response Time (sec)	4.000		

Assessment Tech 1799 David Crowe

Gas: 1002 - OSC2546

Certification Date 01/13/2016 | Concentration (ppm) 9.729.000 | Expiration Date 01/13/2019

Calibrations

Error Precision(%)*	-0.53	Passed	Readings (ppm)	9.674.000	9.688.000	9.671.000
Average Response Time (sec)	5.000	Passed	Response Time (sec)	5.000	5.000	5.000

Drift Assessments

Assessment Time 11:37:43

Error Precision(%)*	-0.71	Passed	Drift Reading (ppm)	9.660.000	Drift Percent (%)	-0.18 Passed
Average Response Time (sec)	5.00	Passed	Response Time (sec)	5.000		

Assessment Tech 1587 Andrew Ficher

Assessment Time 15:30:43

Error Precision(%)*	-0.57	Passed	Drift Reading (ppm)	9.674.000	Drift Percent (%)	-0.04 Passed
Average Response Time (sec)	5.00	Passed	Response Time (sec)	5.000		

Assessment Tech 1799 David Crowe

Response Time - Acceptable Response Time should be 30 seconds or less from the time the calibration gas is introduced, to the time the instrument is equal to or less than +/- ten percent (<=10%)

Error Precision - Precision for the instrument is accepted when the average percent error is equal to or less than 10%.

Standard Calibration Precision Formula:

Precision % = ((CalibrationReading) / GasConcentration) * 100

Precision Calibration Precision Formula:

Calibration Gas Concentration: C
Average Difference: ((Reading1 - C) + (Reading2 - C) + (Reading3 - C)) / 3
Precision % = (Average Difference / C) * 100

Drift Percent - End of Day Drift Assessment Required to be within 10% of Calibration.

ABC Coke

Calibrations for the Time Period From 01/01/2017 through 08/07/2018

Instrument:	TVA: 70803 - TVA1000B
Date Calibrated:	02/15/2018 07:59:31
Calibration Type:	Precision
Pegged Rate:	10,000
Flow Rate:	
Technician:	1587 - Andrew Ficher

Calibration Gases

Gas: 1001 - Airgas Lot Number 87-400377591-1

Certification Date 06/09/2014 | Concentration (ppm) 499.200 | Expiration Date 06/09/2019

Calibrations

Error Precision(%)*	-6.72	Passed	Readings (ppm)	467.000	461.000	469.000
Average Response Time (sec)	3.000	Passed	Response Time (sec)	3.000	3.000	3.000

Drift Assessments

Assessment Time 11:45:48

Error Precision(%)*	-8.25	Passed	Drift Reading (ppm)	458.000	Drift Percent (%)	-1.65 Passed
Average Response Time (sec)	3.00	Passed	Response Time (sec)	3.000		

Assessment Tech 1587 Andrew Ficher

Assessment Time 15:24:29

Error Precision(%)*	-5.65	Passed	Drift Reading (ppm)	471.000	Drift Percent (%)	1.15 Passed
Average Response Time (sec)	4.00	Passed	Response Time (sec)	4.000		

Assessment Tech 1587 Andrew Ficher

Gas: 1002 - OSC2546

Certification Date 01/13/2016 | Concentration (ppm) 9,729.000 | Expiration Date 01/13/2019

Calibrations

Error Precision(%)*	-3.22	Passed	Readings (ppm)	9,408.000	9,417.000	9,422.000
Average Response Time (sec)	5.330	Passed	Response Time (sec)	5.000	5.000	6.000

Drift Assessments

Assessment Time 11:46:22

Error Precision(%)*	-3.33	Passed	Drift Reading (ppm)	9,405.000	Drift Percent (%)	-0.11 Passed
Average Response Time (sec)	5.00	Passed	Response Time (sec)	5.000		

Assessment Tech 1587 Andrew Ficher

Assessment Time 15:25:50

Error Precision(%)*	-3.40	Passed	Drift Reading (ppm)	9,398.000	Drift Percent (%)	-0.19 Passed
Average Response Time (sec)	5.00	Passed	Response Time (sec)	5.000		

Assessment Tech 1587 Andrew Ficher

Response Time - Acceptable Response Time should be 30 seconds or less from the time the calibration gas is introduced, to the time the instrument is equal to or less than +/- ten percent (<=10%)

Error Precision - Precision for the instrument is accepted when the average percent error is equal to or less than 10%.

Standard Calibration Precision Formula:

Precision % = ((CalibrationReading) / GasConcentration) * 100

Precision Calibration Precision Formula:

Calibration Gas Concentration: C
Average Difference: ((Reading1 - C) + (Reading2 - C) + (Reading3 - C)) / 3
Precision % = (Average Difference / C) * 100

Drift Percent - End of Day Drift Assessment Required to be within 10% of Calibration

ABC Coke

Calibrations for the Time Period From 01/01/2017 through 08/07/2018

Instrument:	TVA20: 1401 - TVA 2020
Date Calibrated:	03/07/2018 09:53:23
Calibration Type:	Precision
Pegged Rate:	30,000
Flow Rate:	
Technician:	002 - ABC COKE Technician

Calibration Gases

Gas: 1001 - Airgas Lot Number 87-400377591-1

Certification Date 06/09/2014 Concentration (ppm) 499 200 Expiration Date 06/09/2019

Calibrations

Error Precision(%)*	-0.51	Passed	Readings (ppm)	490 000	508 000	492 000
Average Response Time (sec)	3.000	Passed	Response Time (sec)	3 000	3 000	3 000

Drift Assessments

Assessment Time 10 42 35

Error Precision(%)*	-1.04	Passed	Drift Reading (ppm)	494 000	Drift Percent (%)	-0 54	Passed
Average Response Time (sec)	4.00	Passed	Response Time (sec)	4 000			

Assessment Tech 002 ABC COKE Technician

Gas: 1002 - OSC2546

Certification Date 01/13/2016 Concentration (ppm) 9.729 000 Expiration Date 01/13/2019

Calibrations

Error Precision(%)*	2.79	Passed	Readings (ppm)	10.100 000	10.000 000	9.900 000
Average Response Time (sec)	3.000	Passed	Response Time (sec)	3 000	3 000	3 000

Drift Assessments

Assessment Time 10:24:41

Error Precision(%)*	1.76	Passed	Drift Reading (ppm)	9.900 000	Drift Percent (%)	-1.00	Passed
Average Response Time (sec)	4.00	Passed	Response Time (sec)	4 000			

Assessment Tech 002 ABC COKE Technician

Response Time - Acceptable Response Time should be 30 seconds or less from the time the calibration gas is introduced, to the time the instrument is equal to or less than +/- ten percent (<=10%)

Error Precision - Precision for the instrument is accepted when the average percent error is equal to or less than 10%.

Standard Calibration Precision Formula:

Precision % = ((CalibrationReading) / GasConcentration) * 100

Precision Calibration Precision Formula:

Calibration Gas Concentration: C
Average Difference: ((Reading1 - C) + (Reading2 - C) + (Reading3 - C)) / 3
Precision % = (Average Difference / C) * 100

Drift Percent - End of Day Drift Assessment Required to be within 10% of Calibration

ABC Coke

Calibrations for the Time Period From 01/01/2017 through 08/07/2018

Instrument:	TVA: 9262 - TVA 1000B
Date Calibrated:	03/13/2018 05:51:35
Calibration Type:	Precision
Pegged Rate:	10,000
Flow Rate:	
Technician:	1906 - Brent Birdwell

Calibration Gases

Gas: 1001 - Airgas Lot Number 87-400377591-1

Certification Date 06/09/2014 Concentration (ppm) 499.200 Expiration Date 06/09/2019

Calibrations

Error Precision(%)*	-0.11	Passed	Readings (ppm)	501.000	496.000	499.000
Average Response Time (sec)	4.000	Passed	Response Time (sec)	4.000	4.000	4.000

Drift Assessments

Assessment Time 11:00:00

Error Precision(%)*	-0.84	Passed	Drift Reading (ppm)	495.000	Drift Percent (%)	-0.74	Passed
Average Response Time (sec)	4.00	Passed	Response Time (sec)	4.000			

Assessment Tech 1906 Brent Birdwell

Gas: 1002 - OSC2546

Certification Date 01/13/2016 Concentration (ppm) 9,729.000 Expiration Date 01/13/2019

Calibrations

Error Precision(%)*	0.58	Passed	Readings (ppm)	9,781.000	9,790.000	9,785.000
Average Response Time (sec)	5.000	Passed	Response Time (sec)	5.000	5.000	5.000

Drift Assessments

Assessment Time 11:00:00

Error Precision(%)*	0.52	Passed	Drift Reading (ppm)	9,780.000	Drift Percent (%)	-0.05	Passed
Average Response Time (sec)	5.00	Passed	Response Time (sec)	5.000			

Assessment Tech 1906 Brent Birdwell

Response Time - Acceptable Response Time should be 30 seconds or less from the time the calibration gas is introduced, to the time the instrument is equal to or less than +/- ten percent (<=10%)

Error Precision - Precision for the instrument is accepted when the average percent error is equal to or less than 10%.

Standard Calibration Precision Formula:

Precision % = ((CalibrationReading) / GasConcentration) * 100

Precision Calibration Precision Formula:

Calibration Gas Concentration: C
Average Difference: ((Reading1 - C) + (Reading2 - C) + (Reading3 - C)) / 3
Precision % = (Average Difference / C) * 100

Drift Percent - End of Day Drift Assessment Required to be within 10% of Calibration.

ABC Coke

Calibrations for the Time Period From 01/01/2017 through 08/07/2018

Instrument:	TVA: 70803 - TVA1000B
Date Calibrated:	03/13/2018 05:52:36
Calibration Type:	Precision
Pegged Rate:	10,000
Flow Rate:	
Technician:	1587 - Andrew Ficher

Calibration Gases

Gas: 1001 - Airgas Lot Number 87-400377591-1

Certification Date 06/09/2014 | Concentration (ppm) 499.200 | Expiration Date 06/09/2019

Calibrations

Error Precision(%)*	-7.45	Passed	Readings (ppm)	467.000	461.000	458.000
Average Response Time (sec)	3.000	Passed	Response Time (sec)	3.000	3.000	3.000

Drift Assessments

Assessment Time 11:00:43

Error Precision(%)*	-6.85	Passed	Drift Reading (ppm)	465.000	Drift Percent (%)	0.65 Passed
Average Response Time (sec)	3.00	Passed	Response Time (sec)	3.000		

Assessment Tech 1587 Andrew Ficher

Assessment Time 15:30:30

Error Precision(%)*	-8.05	Passed	Drift Reading (ppm)	459.000	Drift Percent (%)	-0.65 Passed
Average Response Time (sec)	3.00	Passed	Response Time (sec)	3.000		

Assessment Tech 1587 Andrew Ficher

Gas: 1002 - OSC2546

Certification Date 01/13/2016 | Concentration (ppm) 9.729.000 | Expiration Date 01/13/2019

Calibrations

Error Precision(%)*	-3.33	Passed	Readings (ppm)	9.404.000	9,392.000	9,418.000
Average Response Time (sec)	5.000	Passed	Response Time (sec)	5.000	5.000	5.000

Drift Assessments

Assessment Time 11:00:49

Error Precision(%)*	-3.23	Passed	Drift Reading (ppm)	9,415.000	Drift Percent (%)	0.11 Passed
Average Response Time (sec)	5.00	Passed	Response Time (sec)	5.000		

Assessment Tech 1587 Andrew Ficher

Assessment Time 15:32:23

Error Precision(%)*	-3.32	Passed	Drift Reading (ppm)	9.406.000	Drift Percent (%)	0.01 Passed
Average Response Time (sec)	5.00	Passed	Response Time (sec)	5.000		

Assessment Tech 1587 Andrew Ficher

Response Time - Acceptable Response Time should be 30 seconds or less from the time the calibration gas is introduced, to the time the instrument is equal to or less than +/- ten percent (<=10%)

Error Precision - Precision for the instrument is accepted when the average percent error is equal to or less than 10%.

Standard Calibration Precision Formula:

Precision % = ((CalibrationReading) / GasConcentration) * 100

Precision Calibration Precision Formula:

Calibration Gas Concentration: C
Average Difference: ((Reading1 - C) + (Reading2 - C) + (Reading3 - C)) / 3
Precision % = (Average Difference / C) * 100

Drift Percent - End of Day Drift Assessment Required to be within 10% of Calibration.

ABC Coke

Calibrations for the Time Period From 01/01/2017 through 08/07/2018

Instrument:	TVA: 9262 - TVA 1000B
Date Calibrated:	03/23/2018 06:54:22
Calibration Type:	Precision
Pegged Rate:	10,000
Flow Rate:	
Technician:	1906 - Brent Birdwell

Calibration Gases

Gas: 1001 - Airgas Lot Number 87-400377591-1

Certification Date 06/09/2014 | Concentration (ppm) 499.200 | Expiration Date 06/09/2019

Calibrations

Error Precision(%)*	-1.31	Passed	Readings (ppm)	499.000	490.000	489.000
Average Response Time (sec)	4.000	Passed	Response Time (sec)	4.000	4.000	4.000

Drift Assessments

Assessment Time 11:30:00							
Error Precision(%)*	-0.84	Passed	Drift Reading (ppm)	495.000	Drift Percent (%)	0.47	Passed
Average Response Time (sec)	4.00	Passed	Response Time (sec)	4.000			
Assessment Tech 1906 Brent Birdwell							
Assessment Time 14:40:29							
Error Precision(%)*	-1.84	Passed	Drift Reading (ppm)	490.000	Drift Percent (%)	-0.54	Passed
Average Response Time (sec)	4.00	Passed	Response Time (sec)	4.000			
Assessment Tech 1906 Brent Birdwell							

Gas: 1002 - OSC2546

Certification Date 01/13/2016 | Concentration (ppm) 9,729.000 | Expiration Date 01/13/2019

Calibrations

Error Precision(%)*	0.61	Passed	Readings (ppm)	9,780.000	9,789.000	9,797.000
Average Response Time (sec)	5.000	Passed	Response Time (sec)	5.000	5.000	5.000

Drift Assessments

Assessment Time 11:30:00							
Error Precision(%)*	0.63	Passed	Drift Reading (ppm)	9,790.000	Drift Percent (%)	0.01	Passed
Average Response Time (sec)	5.00	Passed	Response Time (sec)	5.000			
Assessment Tech 1906 Brent Birdwell							
Assessment Time 14:36:05							
Error Precision(%)*	0.66	Passed	Drift Reading (ppm)	9,793.000	Drift Percent (%)	0.04	Passed
Average Response Time (sec)	5.00	Passed	Response Time (sec)	5.000			
Assessment Tech 1906 Brent Birdwell							

Response Time - Acceptable Response Time should be 30 seconds or less from the time the calibration gas is introduced, to the time the instrument is equal to or less than +/- ten percent (<=10%)

Error Precision - Precision for the instrument is accepted when the average percent error is equal to or less than 10%.

Standard Calibration Precision Formula:

Precision % = ((CalibrationReading) / GasConcentration) * 100

Precision Calibration Precision Formula:

Calibration Gas Concentration: C
Average Difference: ((Reading1 - C) + (Reading2 - C) + (Reading3 - C)) / 3
Precision % = (Average Difference / C) * 100

Drift Percent - End of Day Drift Assessment Required to be within 10% of Calibration

ABC Coke

Calibrations for the Time Period From 01/01/2017 through 08/07/2018

Instrument:	TVA: 9262 - TVA 1000B
Date Calibrated:	03/28/2018 14:44;51
Calibration Type:	Precision
Pegged Rate:	10,000
Flow Rate:	
Technician:	001 - PPM Consulting Technician

Calibration Gases

Gas: 1001 - Airgas Lot Number 87-400377591-1

Certification Date 06/09/2014 Concentration (ppm) 499.200 Expiration Date 06/09/2019

Calibrations

Error Precision(%)*	0.16	Passed	Readings (ppm)	500.000	500.000	500.000
Average Response Time (sec)	5.000	Passed	Response Time (sec)	5.000	5.000	5.000

Gas: 1002 - OSC2546

Certification Date 01/13/2016 Concentration (ppm) 9,729.000 Expiration Date 01/13/2019

Calibrations

Error Precision(%)*	2.79	Passed	Readings (ppm)	10,000.000	10,000.000	10,000.000
Average Response Time (sec)	5.000	Passed	Response Time (sec)	5.000	5.000	5.000

Response Time - Acceptable Response Time should be 30 seconds or less from the time the calibration gas is introduced, to the time the instrument is equal to or less than +/- ten percent (<=10%)

Error Precision - Precision for the instrument is accepted when the average percent error is equal to or less than 10%.

Standard Calibration Precision Formula:

Precision % = ((CalibrationReading) / GasConcentration) * 100

Precision Calibration Precision Formula:

Calibration Gas Concentration: C
Average Difference: ((Reading1 - C) + (Reading2 - C) + (Reading3 - C)) / 3
Precision % = (Average Difference / C) * 100

Drift Percent - End of Day Drift Assessment Required to be within 10% of Calibration

ABC Coke

Calibrations for the Time Period From 01/01/2017 through 08/07/2018

Instrument:	TVA: 70803 - TVA1000B
Date Calibrated:	04/25/2018 07:38:15
Calibration Type:	Precision
Pegged Rate:	10.000
Flow Rate:	1.30
Technician:	1587 - Andrew Ficher

Calibration Gases

Gas: 1000 - Airgas Ultra Pure Zero LOT NUMBER 87-400371069-1

Certification Date 05/20/2014 Concentration (ppm) 0.000 Expiration Date 05/20/2019

Calibrations

Error Precision(%)*	0.00	Passed	Readings (ppm)	0.000	0.000	0.000
Average Response Time (sec)	0.000	Passed	Response Time (sec)	0.000	0.000	0.000

Gas: 1001 - Airgas Lot Number 87-400377591-1

Certification Date 06/09/2014 Concentration (ppm) 499.200 Expiration Date 06/09/2019

Calibrations

Error Precision(%)*	-7.25	Passed	Readings (ppm)	462.000	468.000	459.000
Average Response Time (sec)	3.000	Passed	Response Time (sec)	3.000	3.000	3.000

Drift Assessments

Assessment Time 11:00:09

Error Precision(%)*	-5.65	Passed	Drift Reading (ppm)	471.000	Drift Percent (%)	1.73	Passed
Average Response Time (sec)	4.00	Passed	Response Time (sec)	4.000			

Assessment Tech 1587 Andrew Ficher

Assessment Time 14:48:33

Error Precision(%)*	-7.45	Passed	Drift Reading (ppm)	462.000	Drift Percent (%)	-0.22	Passed
Average Response Time (sec)	3.00	Passed	Response Time (sec)	3.000			

Assessment Tech 1587 Andrew Ficher

Response Time - Acceptable Response Time should be 30 seconds or less from the time the calibration gas is introduced, to the time the instrument is equal to or less than +/- ten percent (<=10%)

Error Precision - Precision for the instrument is accepted when the average percent error is equal to or less than 10%.

Standard Calibration Precision Formula:

Precision % = ((CalibrationReading) / GasConcentration) * 100

Precision Calibration Precision Formula:

Calibration Gas Concentration: C
Average Difference: ((Reading1 - C) + (Reading2 - C) + (Reading3 - C)) / 3
Precision % = (Average Difference / C) * 100

Drift Percent - End of Day Drift Assessment Required to be within 10% of Calibration

ABC Coke

Calibrations for the Time Period From 01/01/2017 through 08/07/2018

Instrument:	TVA: 70803 - TVA1000B
Date Calibrated:	04/25/2018 07:38:15
Calibration Type:	Precision
Pegged Rate:	10,000
Flow Rate:	1.30
Technician:	1587 - Andrew Ficher

Calibration Gases

Gas: 1002 - OSC2546

Certification Date 01/13/2016 Concentration (ppm) 9.729.000 Expiration Date 01/13/2019

Calibrations

Error Precision(%)*	-3.18	Passed	Readings (ppm)	9.429.000	9,412.000	9.417.000	
Average Response Time (sec)	5.330	Passed	Response Time (sec)	6.000	5.000	5.000	

Drift Assessments

Assessment Time 11:00:49

Error Precision(%)*	-3.06	Passed	Drift Reading (ppm)	9.431.000	Drift Percent (%)	0.12	Passed
Average Response Time (sec)	6.00	Passed	Response Time (sec)	6.000			

Assessment Tech 1587 Andrew Ficher

Assessment Time 14:49:33

Error Precision(%)*	-3.19	Passed	Drift Reading (ppm)	9.419.000	Drift Percent (%)	0.00	Passed
Average Response Time (sec)	5.00	Passed	Response Time (sec)	5.000			

Assessment Tech 1587 Andrew Ficher

Response Time - Acceptable Response Time should be 30 seconds or less from the time the calibration gas is introduced, to the time the instrument is equal to or less than +/- ten percent (<=10%)

Error Precision - Precision for the instrument is accepted when the average percent error is equal to or less than 10%.

Standard Calibration Precision Formula:

Precision % = ((CalibrationReading) / GasConcentration) * 100

Precision Calibration Precision Formula:

Calibration Gas Concentration: C
Average Difference: ((Reading1 - C) + (Reading2 - C) + (Reading3 - C)) / 3
Precision % = (Average Difference / C) * 100

Drift Percent - End of Day Drift Assessment Required to be within 10% of Calibration

ABC Coke

Calibrations for the Time Period From 01/01/2017 through 08/07/2018

Instrument:	TVA: 9262 - TVA 1000B
Date Calibrated:	04/25/2018 07:40:19
Calibration Type:	Precision
Pegged Rate:	10.000
Flow Rate:	1.20
Technician:	1906 - Brent Birdwell

Calibration Gases

Gas: 1000 - Airgas Ultra Pure Zero LOT NUMBER 87-400371069-1

Certification Date 05/20/2014 — Concentration (ppm) 0.000 — Expiration Date 05/20/2019

Calibrations

Error Precision(%)*	0.00	Passed	Readings (ppm)	0.000	0.000	0.000
Average Response Time (sec)	0.000	Passed	Response Time (sec)	0.000	0.000	0.000

Gas: 1001 - Airgas Lot Number 87-400377591-1

Certification Date 06/09/2014 — Concentration (ppm) 499.200 — Expiration Date 06/09/2019

Calibrations

Error Precision(%)*	-5.72	Passed	Readings (ppm)	471.000	465.000	476.000
Average Response Time (sec)	3.000	Passed	Response Time (sec)	3.000	3.000	3.000

Drift Assessments

Assessment Time 11:01:09

Error Precision(%)*	-3.65	Passed	Drift Reading (ppm)	481.000	Drift Percent (%)	2.20 Passed
Average Response Time (sec)	4.00	Passed	Response Time (sec)	4.000		

Assessment Tech 1906 Brent Birdwell

Gas: 1002 - OSC2546

Certification Date 01/13/2016 — Concentration (ppm) 9,729.000 — Expiration Date 01/13/2019

Calibrations

Error Precision(%)*	-3.53	Passed	Readings (ppm)	9,392.000	9,376.000	9,388.000
Average Response Time (sec)	5.000	Passed	Response Time (sec)	5.000	5.000	5.000

Drift Assessments

Assessment Time 09:01:44

Error Precision(%)*	-3.50	Passed	Drift Reading (ppm)	9,388.000	Drift Percent (%)	0.03 Passed
Average Response Time (sec)	5.00	Passed	Response Time (sec)	5.000		

Assessment Tech 1906 Brent Birdwell

Response Time - Acceptable Response Time should be 30 seconds or less from the time the calibration gas is introduced, to the time the instrument is equal to or less than +/- ten percent (<=10%)

Error Precision - Precision for the instrument is accepted when the average percent error is equal to or less than 10%.

Standard Calibration Precision Formula:

Precision % = ((CalibrationReading) / GasConcentration) * 100

Precision Calibration Precision Formula:

Calibration Gas Concentration: C
Average Difference: ((Reading1 - C) + (Reading2 - C) + (Reading3 - C)) / 3
Precision % = (Average Difference / C) * 100

Drift Percent - End of Day Drift Assessment Required to be within 10% of Calibration

ABC Coke

Calibrations for the Time Period From 01/01/2017 through 08/07/2018

Instrument:	TVA: 0780 - TVA 1000B
Date Calibrated:	04/27/2018 08:25:34
Calibration Type:	Precision
Pegged Rate:	10,000
Flow Rate:	
Technician:	1724 - Matt Case

Calibration Gases

Gas: 1001 - Airgas Lot Number 87-400377591-1

Certification Date 06/09/2014 — Concentration (ppm) 499.200 — Expiration Date 06/09/2019

Calibrations

Error Precision(%)*	2.90	Passed	Readings (ppm)	511.000	517.000	513.000
Average Response Time (sec)	4.000	Passed	Response Time (sec)	4.000	4.000	4.000

Drift Assessments

Assessment Time 11:50:31

Error Precision(%)*	3.97	Passed	Drift Reading (ppm)	519.000	Drift Percent (%)	1.04 Passed
Average Response Time (sec)	4.00	Passed	Response Time (sec)	4.000		

Assessment Tech 1724 Matt Case

Assessment Time 15:50:50

Error Precision(%)*	3.17	Passed	Drift Reading (ppm)	515.000	Drift Percent (%)	0.26 Passed
Average Response Time (sec)	4.00	Passed	Response Time (sec)	4.000		

Assessment Tech 1724 Matt Case

Gas: 1002 - OSC2546

Certification Date 01/13/2016 — Concentration (ppm) 9.729.000 — Expiration Date 01/13/2019

Calibrations

Error Precision(%)*	0.72	Passed	Readings (ppm)	9.782.000	9,804.000	9,812.000
Average Response Time (sec)	4.000	Passed	Response Time (sec)	4.000	4.000	4.000

Drift Assessments

Assessment Time 11:51:50

Error Precision(%)*	0.64	Passed	Drift Reading (ppm)	9.791.000	Drift Percent (%)	-0.09 Passed
Average Response Time (sec)	2.00	Passed	Response Time (sec)	2.000		

Assessment Tech 1724 Matt Case

Assessment Time 15:52:17

Error Precision(%)*	1.56	Passed	Drift Reading (ppm)	9,881.000	Drift Percent (%)	0.83 Passed
Average Response Time (sec)	4.00	Passed	Response Time (sec)	4.000		

Assessment Tech 1724 Matt Case

Response Time - Acceptable Response Time should be 30 seconds or less from the time the calibration gas is introduced, to the time the instrument is equal to or less than +/- ten percent (<=10%)

Error Precision - Precision for the instrument is accepted when the average percent error is equal to or less than 10%.

Standard Calibration Precision Formula:

Precision % = ((CalibrationReading) / GasConcentration) * 100

Precision Calibration Precision Formula:

Calibration Gas Concentration: C
Average Difference: ((Reading1 - C) + (Reading2 - C) + (Reading3 - C)) / 3
Precision % = (Average Difference / C) * 100

Drift Percent - End of Day Drift Assessment Required to be within 10% of Calibration.

ABC Coke

Calibrations for the Time Period From 01/01/2017 through 08/07/2018

Instrument:	TVA: 9262 - TVA 1000B
Date Calibrated:	05/09/2018 06:01:38
Calibration Type:	Precision
Pegged Rate:	10,000
Flow Rate:	
Technician:	1906 - Brent Birdwell

Calibration Gases

Gas: 1001 - Airgas Lot Number 87-400377591-1

Certification Date 06/09/2014 | Concentration (ppm) 499.200 | Expiration Date 06/09/2019

Calibrations

Error Precision(%)*	0.09	Passed	Readings (ppm)	499.000	505.000	495.000
Average Response Time (sec)	4.000	Passed	Response Time (sec)	4.000	4.000	4.000

Drift Assessments

Assessment Time 11:00:00

Error Precision(%)*	0.36	Passed	Drift Reading (ppm)	501.000	Drift Percent (%)	0.27 Passed
Average Response Time (sec)	4.00	Passed	Response Time (sec)	4.000		

Assessment Tech 1906 Brent Birdwell

Assessment Time 14:00:00

Error Precision(%)*	-1.64	Passed	Drift Reading (ppm)	491.000	Drift Percent (%)	-1.73 Passed
Average Response Time (sec)	4.00	Passed	Response Time (sec)	4.000		

Assessment Tech 1906 Brent Birdwell

Gas: 1002 - OSC2546

Certification Date 01/13/2016 | Concentration (ppm) 9,729.000 | Expiration Date 01/13/2019

Calibrations

Error Precision(%)*	0.17	Passed	Readings (ppm)	9,740.000	9,749.000	9,748.000
Average Response Time (sec)	5.000	Passed	Response Time (sec)	5.000	5.000	5.000

Drift Assessments

Assessment Time 11:00:00

Error Precision(%)*	0.27	Passed	Drift Reading (ppm)	9,755.000	Drift Percent (%)	0.10 Passed
Average Response Time (sec)	5.00	Passed	Response Time (sec)	5.000		

Assessment Tech 1906 Brent Birdwell

Assessment Time 14:00:00

Error Precision(%)*	0.23	Passed	Drift Reading (ppm)	9,751.000	Drift Percent (%)	0.05 Passed
Average Response Time (sec)	5.00	Passed	Response Time (sec)	5.000		

Assessment Tech 1906 Brent Birdwell

Response Time - Acceptable Response Time should be 30 seconds or less from the time the calibration gas is introduced, to the time the instrument is equal to or less than +/- ten percent (<=10%)

Error Precision - Precision for the instrument is accepted when the average percent error is equal to or less than 10%.

Standard Calibration Precision Formula:

Precision % = ((CalibrationReading) / GasConcentration) * 100

Precision Calibration Precision Formula:

Calibration Gas Concentration: C
Average Difference: ((Reading1 - C) + (Reading2 - C) + (Reading3 - C)) / 3
Precision % = (Average Difference / C) * 100

Drift Percent - End of Day Drift Assessment Required to be within 10% of Calibration

ABC Coke

Calibrations for the Time Period From 01/01/2017 through 08/07/2018

Instrument:	TVA: 70805 - TVA 1000B
Date Calibrated:	05/09/2018 06:04:07
Calibration Type:	Precision
Pegged Rate:	10,000
Flow Rate:	
Technician:	834 - Corey Sales

Calibration Gases

Gas: 1001 - Airgas Lot Number 87-400377591-1

Certification Date 06/09/2014 Concentration (ppm) 499.200 Expiration Date 06/09/2019

Calibrations

Error Precision(%)*	0.49	Passed	Readings (ppm)	509.000	499.000	497.000	
Average Response Time (sec)	4.000	Passed	Response Time (sec)	4.000	4.000	4.000	

Drift Assessments

Assessment Time 11:00:00							
Error Precision(%)*	1.16	Passed	Drift Reading (ppm)	505.000	Drift Percent (%)	0.66	Passed
Average Response Time (sec)	4.00	Passed	Response Time (sec)	4.000			
Assessment Tech 834 Corey Sales							
Assessment Time 14:00:00							
Error Precision(%)*	1.96	Passed	Drift Reading (ppm)	509.000	Drift Percent (%)	1.46	Passed
Average Response Time (sec)	4.00	Passed	Response Time (sec)	4.000			
Assessment Tech 834 Corey Sales							

Gas: 1002 - OSC2546

Certification Date 01/13/2016 Concentration (ppm) 9.729.000 Expiration Date 01/13/2019

Calibrations

Error Precision(%)*	0.54	Passed	Readings (ppm)	9.780.000	9.789.000	9.777.000	
Average Response Time (sec)	5.000	Passed	Response Time (sec)	5.000	5.000	5.000	

Drift Assessments

Assessment Time 11:00:00							
Error Precision(%)*	0.58	Passed	Drift Reading (ppm)	9.785.000	Drift Percent (%)	0.03	Passed
Average Response Time (sec)	5.00	Passed	Response Time (sec)	5.000			
Assessment Tech 834 Corey Sales							
Assessment Time 14:00:00							
Error Precision(%)*	1.24	Passed	Drift Reading (ppm)	9,850.000	Drift Percent (%)	0.70	Passed
Average Response Time (sec)	5.00	Passed	Response Time (sec)	5.000			
Assessment Tech 834 Corey Sales							

Response Time - Acceptable Response Time should be 30 seconds or less from the time the calibration gas is introduced, to the time the instrument is equal to or less than +/- ten percent (<=10%)

Error Precision - Precision for the instrument is accepted when the average percent error is equal to or less than 10%.

Standard Calibration Precision Formula:

Precision % = ((CalibrationReading) / GasConcentration) * 100

Precision Calibration Precision Formula:

Calibration Gas Concentration: C
Average Difference: ((Reading1 - C) + (Reading2 - C) + (Reading3 - C)) / 3
Precision % = (Average Difference / C) * 100

Drift Percent - End of Day Drift Assessment Required to be within 10% of Calibration.

ABC Coke

Calibrations for the Time Period From 01/01/2017 through 08/07/2018

Instrument:	TVA: 9269 - TVA 1000B
Date Calibrated:	06/20/2018 05:50:31
Calibration Type:	Precision
Pegged Rate:	10,000
Flow Rate:	
Technician:	1799 - David Crowe

Calibration Gases

Gas: 1001 - Airgas Lot Number 87-400377591-1

Certification Date 06/09/2014 | Concentration (ppm) 499.200 | Expiration Date 06/09/2019

Calibrations

Error Precision(%)*	-4.85	Passed	Readings (ppm)	469.000	475.000	481.000
Average Response Time (sec)	3.000	Passed	Response Time (sec)	3.000	3.000	3.000

Drift Assessments

Assessment Time 09:00:54						
Error Precision(%)*	-2.24	Passed	Drift Reading (ppm)	488.000	Drift Percent (%)	2.74 Passed
Average Response Time (sec)	3.00	Passed	Response Time (sec)	3.000		
Assessment Tech 1799 David Crowe						
Assessment Time 12:00:08						
Error Precision(%)*	-4.25	Passed	Drift Reading (ppm)	478.000	Drift Percent (%)	0.63 Passed
Average Response Time (sec)	3.00	Passed	Response Time (sec)	3.000		
Assessment Tech 1799 David Crowe						

Gas: 1002 - OSC2546

Certification Date 01/13/2016 | Concentration (ppm) 9,729.000 | Expiration Date 01/13/2019

Calibrations

Error Precision(%)*	1.53	Passed	Readings (ppm)	9,877.000	9,885.000	9,872.000
Average Response Time (sec)	4.330	Passed	Response Time (sec)	4.000	4.000	5.000

Drift Assessments

Assessment Time 09:00:07						
Error Precision(%)*	1.55	Passed	Drift Reading (ppm)	9,880.000	Drift Percent (%)	0.02 Passed
Average Response Time (sec)	4.00	Passed	Response Time (sec)	4.000		
Assessment Tech 1799 David Crowe						
Assessment Time 12:00:54						
Error Precision(%)*	1.47	Passed	Drift Reading (ppm)	9,872.000	Drift Percent (%)	-0.06 Passed
Average Response Time (sec)	4.00	Passed	Response Time (sec)	4.000		
Assessment Tech 1799 David Crowe						

Response Time - Acceptable Response Time should be 30 seconds or less from the time the calibration gas is introduced, to the time the instrument is equal to or less than +/- ten percent (<=10%)

Error Precision - Precision for the instrument is accepted when the average percent error is equal to or less than 10%.

Standard Calibration Precision Formula:

Precision % = ((CalibrationReading) / GasConcentration) * 100

Precision Calibration Precision Formula:

Calibration Gas Concentration: C
Average Difference: ((Reading1 - C) + (Reading2 - C) + (Reading3 - C)) / 3
Precision % = (Average Difference / C) * 100

Drift Percent - End of Day Drift Assessment Required to be within 10% of Calibration

ABC Coke

Calibrations for the Time Period From 01/01/2017 through 08/07/2018

Instrument:	TVA: 9262 - TVA 1000B
Date Calibrated:	06/20/2018 05:53:33
Calibration Type:	Precision
Pegged Rate:	10,000
Flow Rate:	
Technician:	1971 - Tory Pelzer

Calibration Gases

Gas: 1001 - Airgas Lot Number 87-400377591-1

Certification Date 06/09/2014 — Concentration (ppm) 499.200 — Expiration Date 06/09/2019

Calibrations

Error Precision(%)*	3.50	Passed	Readings (ppm)	515.000	505.000	530.000
Average Response Time (sec)	4.000	Passed	Response Time (sec)	4.000	4.000	4.000

Drift Assessments

Assessment Time 11:00:00

Error Precision(%)*	5.17	Passed	Drift Reading (ppm)	525.000	Drift Percent (%)	1.61	Passed
Average Response Time (sec)	4.00	Passed	Response Time (sec)	4.000		

Assessment Tech 1971 Tory Pelzer

Assessment Time 14:00:00

Error Precision(%)*	1.16	Passed	Drift Reading (ppm)	505.000	Drift Percent (%)	-2.26	Passed
Average Response Time (sec)	4.00	Passed	Response Time (sec)	4.000		

Assessment Tech 1971 Tory Pelzer

Gas: 1002 - OSC2546

Certification Date 01/13/2016 — Concentration (ppm) 9.729.000 — Expiration Date 01/13/2019

Calibrations

Error Precision(%)*	-0.42	Passed	Readings (ppm)	9.705.000	9.660.000	9.700.000
Average Response Time (sec)	5.000	Passed	Response Time (sec)	5.000	5.000	5.000

Drift Assessments

Assessment Time 11:00:00

Error Precision(%)*	-0.81	Passed	Drift Reading (ppm)	9.650.000	Drift Percent (%)	-0.40	Passed
Average Response Time (sec)	5.00	Passed	Response Time (sec)	5.000		

Assessment Tech 1971 Tory Pelzer

Assessment Time 14:00:00

Error Precision(%)*	-0.25	Passed	Drift Reading (ppm)	9.705.000	Drift Percent (%)	0.17	Passed
Average Response Time (sec)	5.00	Passed	Response Time (sec)	5.000		

Assessment Tech 1971 Tory Pelzer

Response Time - Acceptable Response Time should be 30 seconds or less from the time the calibration gas is introduced, to the time the instrument is equal to or less than +/- ten percent (<=10%)

Error Precision - Precision for the instrument is accepted when the average percent error is equal to or less than 10%.

Standard Calibration Precision Formula:

Precision % = ((CalibrationReading) / GasConcentration) * 100

Precision Calibration Precision Formula:

Calibration Gas Concentration: C
Average Difference: ((Reading1 - C) + (Reading2 - C) + (Reading3 - C)) / 3
Precision % = (Average Difference / C) * 100

Drift Percent - End of Day Drift Assessment Required to be within 10% of Calibration

ABC Coke

Calibrations for the Time Period From 01/01/2017 through 08/07/2018

Instrument:	TVA: 70805 - TVA 1000B
Date Calibrated:	07/30/2018 05:18:17
Calibration Type:	Precision
Pegged Rate:	10,000
Flow Rate:	
Technician:	1906 - Brent Birdwell

Calibration Gases

Gas: 1001 - Airgas Lot Number 87-400377591-1

Certification Date 06/09/2014 | Concentration (ppm) 499.200 | Expiration Date 06/09/2019

Calibrations

Error Precision(%)*	-0.24	Passed	Readings (ppm)	498.000	502.000	494.000
Average Response Time (sec)	4.000	Passed	Response Time (sec)	4.000	4.000	4.000

Drift Assessments

Assessment Time 13:54:17

Error Precision(%)*	1.36	Passed	Drift Reading (ppm)	506.000	Drift Percent (%)	1.61 Passed
Average Response Time (sec)	4.00	Passed	Response Time (sec)	4.000		

Assessment Tech 1906 Brent Birdwell

Assessment Time 18:55:15

Error Precision(%)*	-0.04	Passed	Drift Reading (ppm)	499.000	Drift Percent (%)	0.20 Passed
Average Response Time (sec)	6.00	Passed	Response Time (sec)	6.000		

Assessment Tech 1906 Brent Birdwell

Gas: 1002 - OSC2546

Certification Date 01/13/2016 | Concentration (ppm) 9,729.000 | Expiration Date 01/13/2019

Calibrations

Error Precision(%)*	-1.89	Passed	Readings (ppm)	9,550.000	9,541.000	9,544.000
Average Response Time (sec)	5.000	Passed	Response Time (sec)	5.000	5.000	5.000

Drift Assessments

Assessment Time 13:56:05

Error Precision(%)*	2.67	Passed	Drift Reading (ppm)	9,989.000	Drift Percent (%)	4.65 Passed
Average Response Time (sec)	5.00	Passed	Response Time (sec)	5.000		

Assessment Tech 1906 Brent Birdwell

Assessment Time 18:56:36

Error Precision(%)*	0.58	Passed	Drift Reading (ppm)	9,785.000	Drift Percent (%)	2.51 Passed
Average Response Time (sec)	5.00	Passed	Response Time (sec)	5.000		

Assessment Tech 1906 Brent Birdwell

Response Time - Acceptable Response Time should be 30 seconds or less from the time the calibration gas is introduced, to the time the instrument is equal to or less than +/- ten percent (<=10%)

Error Precision - Precision for the instrument is accepted when the average percent error is equal to or less than 10%.

Standard Calibration Precision Formula:

Precision % = ((CalibrationReading) / GasConcentration) * 100

Precision Calibration Precision Formula:

Calibration Gas Concentration: C
Average Difference: ((Reading1 - C) + (Reading2 - C) + (Reading3 - C)) / 3
Precision % = (Average Difference / C) * 100

Drift Percent - End of Day Drift Assessment Required to be within 10% of Calibration.

ABC Coke

Calibrations for the Time Period From 01/01/2017 through 08/07/2018

Instrument:	TVA: 73272 - TVA1000B
Date Calibrated:	07/30/2018 05:19:41
Calibration Type:	Precision
Pegged Rate:	10.000
Flow Rate:	
Technician:	1724 - Matt Case

Calibration Gases

Gas: 1001 - Airgas Lot Number 87-400377591-1

Certification Date 06/09/2014 | Concentration (ppm) 499.200 | Expiration Date 06/09/2019

Calibrations

Error Precision(%)*	-3.45	Passed	Readings (ppm)	479.000	481.000	486.000
Average Response Time (sec)	4.000	Passed	Response Time (sec)	4.000	4.000	4.000

Drift Assessments

Assessment Time 18:57:03

Error Precision(%)*	0.76	Passed	Drift Reading (ppm)	503.000	Drift Percent (%)	4.36 Passed
Average Response Time (sec)	4.00	Passed	Response Time (sec)	4.000		

Assessment Tech 1724 Matt Case

Assessment Time 18:57:23

Error Precision(%)*	2.36	Passed	Drift Reading (ppm)	511.000	Drift Percent (%)	6.02 Passed
Average Response Time (sec)	6.00	Passed	Response Time (sec)	6.000		

Assessment Tech 1724 Matt Case

Gas: 1002 - OSC2546

Certification Date 01/13/2016 | Concentration (ppm) 9.729.000 | Expiration Date 01/13/2019

Calibrations

Error Precision(%)*	-0.53	Passed	Readings (ppm)	9.673.000	9.822.000	9.536.000
Average Response Time (sec)	4.000	Passed	Response Time (sec)	4.000	4.000	4.000

Drift Assessments

Assessment Time 13:57:52

Error Precision(%)*	2.43	Passed	Drift Reading (ppm)	9.965.000	Drift Percent (%)	2.98 Passed
Average Response Time (sec)	5.00	Passed	Response Time (sec)	5.000		

Assessment Tech 1724 Matt Case

Assessment Time 18:58:16

Error Precision(%)*	2.38	Passed	Drift Reading (ppm)	9.961.000	Drift Percent (%)	2.93 Passed
Average Response Time (sec)	7.00	Passed	Response Time (sec)	7.000		

Assessment Tech 1724 Matt Case

Response Time - Acceptable Response Time should be 30 seconds or less from the time the calibration gas is introduced, to the time the instrument is equal to or less than +/- ten percent (<=10%)

Error Precision - Precision for the instrument is accepted when the average percent error is equal to or less than 10%.

Standard Calibration Precision Formula:

Precision % = ((CalibrationReading) / GasConcentration) * 100

Precision Calibration Precision Formula:

Calibration Gas Concentration: C
Average Difference: ((Reading1 - C) + (Reading2 - C) + (Reading3 - C)) / 3
Precision % = (Average Difference / C) * 100

Drift Percent - End of Day Drift Assessment Required to be within 10% of Calibration

ABC Coke

Calibrations for the Time Period From 01/01/2017 through 08/07/2018

Instrument:	TVA: 73272 - TVA1000B
Date Calibrated:	07/31/2018 06:38:41
Calibration Type:	Precision
Pegged Rate:	10,000
Flow Rate:	
Technician:	1724 - Matt Case

Calibration Gases

Gas: 1001 - Airgas Lot Number 87-400377591-1

Certification Date 06/09/2014 | Concentration (ppm) 499.200 | Expiration Date 06/09/2019

Calibrations

Error Precision(%)*	-0.84	Passed	Readings (ppm)	492.000	496.000	497.000
Average Response Time (sec)	4.000	Passed	Response Time (sec)	4.000	4.000	4.000

Drift Assessments

Assessment Time 11:58:48

Error Precision(%)*	0.36	Passed	Drift Reading (ppm)	501.000	Drift Percent (%)	1.21 Passed
Average Response Time (sec)	4.00	Passed	Response Time (sec)	4.000		

Assessment Tech 1724 Matt Case

Assessment Time 18:59:16

Error Precision(%)*	-0.24	Passed	Drift Reading (ppm)	498.000	Drift Percent (%)	0.61 Passed
Average Response Time (sec)	4.00	Passed	Response Time (sec)	4.000		

Assessment Tech 1724 Matt Case

Gas: 1002 - OSC2546

Certification Date 01/13/2016 | Concentration (ppm) 9,729.000 | Expiration Date 01/13/2019

Calibrations

Error Precision(%)*	1.67	Passed	Readings (ppm)	9,874.000	9,911.000	9,889.000
Average Response Time (sec)	4.000	Passed	Response Time (sec)	4.000	4.000	4.000

Drift Assessments

Assessment Time 13:59:40

Error Precision(%)*	1.40	Passed	Drift Reading (ppm)	9,865.000	Drift Percent (%)	-0.27 Passed
Average Response Time (sec)	6.00	Passed	Response Time (sec)	6.000		

Assessment Tech 1724 Matt Case

Assessment Time 19:00:04

Error Precision(%)*	0.25	Passed	Drift Reading (ppm)	9,753.000	Drift Percent (%)	-1.40 Passed
Average Response Time (sec)	6.00	Passed	Response Time (sec)	6.000		

Assessment Tech 1724 Matt Case

Response Time - Acceptable Response Time should be 30 seconds or less from the time the calibration gas is introduced, to the time the instrument is equal to or less than +/- ten percent (<=10%)

Error Precision - Precision for the instrument is accepted when the average percent error is equal to or less than 10%.

Standard Calibration Precision Formula:

Precision % = ((CalibrationReading) / GasConcentration) * 100

Precision Calibration Precision Formula:

Calibration Gas Concentration: C
Average Difference: ((Reading1 - C) + (Reading2 - C) + (Reading3 - C)) / 3
Precision % = (Average Difference / C) * 100

Drift Percent - End of Day Drift Assessment Required to be within 10% of Calibration

BLANK PAGE

3

ABC Coke

Placed on DOR Leaking Equipment for the Time Period From 01/01/2017 through 08/07/2018

EQUIPMENT

TAG NO.: LINE #: LOCATION: CVS:
ACCESS: EQUIP: GROUP: SIZE:
SERVICE: CONFIG: PRODUCT: LEVEL:
COMMENT: P & ID : UNDER 300 HRS:

INSPECTION

DATE READ: READING: AVO LEAK: LEAK LIMIT:
TECHNICIAN: BACKGROUND: INSTRUMENT:

ATTEMPT DUE DATES

ATTEMPT: 1ST ATTEMPT
DATE DUE:
COMPLETED:

REPAIR DUE DATES

LEAK LIMIT:
DATE DUE:
COMPLETED:

REPAIR STATUS

DATE REPAIRED: EST. REPAIR DATE: ISOLATED FROM SVC: RETURNED TO SVC:
PLACED ON DELAY: AUTHORIZED BY: YRS ON DELAY: WARRANTY EXPIRY:
REASON: WORK ORDER #:
EXTRAORDINARY ATT ALLOWED:
COMMENT: CLOSE AUTH BY:

REPAIR ATTEMPTS

EMISSION POINT:

ATTEMPT DATE	REPAIR METHOD	MATERIAL USED	REMON DATE	BKGD	READING	AVO	TECHNICIAN	INSTRUMENT	TECH MADE ATT	EX ATT

ABC Coke

Placed on DOR Leaking Equipment for the Time Period From 01/01/2017 through 08/07/2018

ABC Coke

Placed on DOR Leaking Equipment for the Time Period From 01/01/2017 through 08/07/2018

0 TOTAL LEAKS

3

Airgas

[redacted]

Airgas USA, LLC.
4551 North Access Road
Chattanooga, TN 37415
Phone: (423) 870-7171 Fax: (423) 870-7180
http://www.airgas.com

CERTIFICATE OF ANALYSIS

Grade of Product: PRIMARY STANDARD

Part Number	X02AI99P300C025		
Cylinder Number	OSC2546	Reference Number:	87-400657457-1
Laboratory	ASO - Chattanooga Plant - TN	Cylinder Volume:	235.1 CF
Analysis Date	Jan 13, 2016	Cylinder Pressure:	1918 PSIG
Lot Number	87-400657457-1	Valve Outlet:	590

Expiration Date: Jan 13, 2019

Primary Standard Gas Mixtures are traceable to N.I.S.T. weights and/or N.I.S.T. Gas Mixture reference materials.

ANALYTICAL RESULTS

Component	Req Conc	Actual Concentration (Mole %)	Analytical Uncertainty
METHANE	9750 PPM	9729 PPM	+/- 1%
AIR	Balance		

Approved for Release

[redacted]

.Airgas.

CERTIFICATE OF ANALYSIS

AIR-ZERO

Part Number: AI Z300
Cylinder Analyzed : 421545Y-

Laboratory: ASO - Chattanooga Plant - TN
Analysis Date: May 20, 2014
Lot Number: 87-400371069-1
Expiration May 20, 2019

Reference Number 87-400371069-1
Cylinder Volume: 312 O CF
Cylinder Pressure: 2640 PSI G
Valve Outlet: 590

ANALYTICAL RESULTS +/-2%

Component	Requested Purity	Certified Concentration
AIR		
THC	< 1 0 PPM	<LDL 0.02 PPM
Percent Oxygen	20-22 %	21 61 %
Moisture	< 3 0 PPM	0.74 PPM

Cylinders in Batch

1731270Y-, 196565-, 229.L561, 281462-, 34427-57-, 3585--, 406879YA, 412661-, 417718-, 421545Y-, 459620- 477640-, 5223756-, 62-36034-, 84283-, T-1687-, T432139-, TWC 483600, W--255904, W-337390, W391852 -

Notes:

Impurities verified against analytical standards traceable to NIST by weight and/or analysis.

Signature on file

Approved for Release

Airgas USA, LLC
4551 North Access Road
Chattanooga, TN 37415
Phone (423) 870-7171 Fax (423) 870-7180
http://www.airgas.com

CERTIFICATE OF ANALYSIS

Grade of Product: CERTIFIED STANDARD-SPEC

Part Number	X02AI £'9C30048 i 7	Reference Number:	87-400377591-1
Cylinder Number	7W449334	Cylinder Volume:	289,9 CF
Laboratory:	ASO - Chattanooga Plant TN	Cylinder Pressure:	2398 PSIG
Analysis Date:	Jun 09, 2014	Valve Outlet:	590
Lot Number:	87 400377591-1 Exp Jun 09, 2019		

Product composition verified by direct corflparison to calibration standards traceable to N.I.S.T. weights and/or N.I.S.T. Gas Mixture reference materials.

ANALYTICAL RESULTS

Component	Requested Concentration	Actual Concentration (Mole%)	Ana lytical Uncertainty
METHANE	500.0 PPM	499.2 PPM	+/-2%
AIR	Balance		

Notes:

Approved for Release

BLANK PAGE

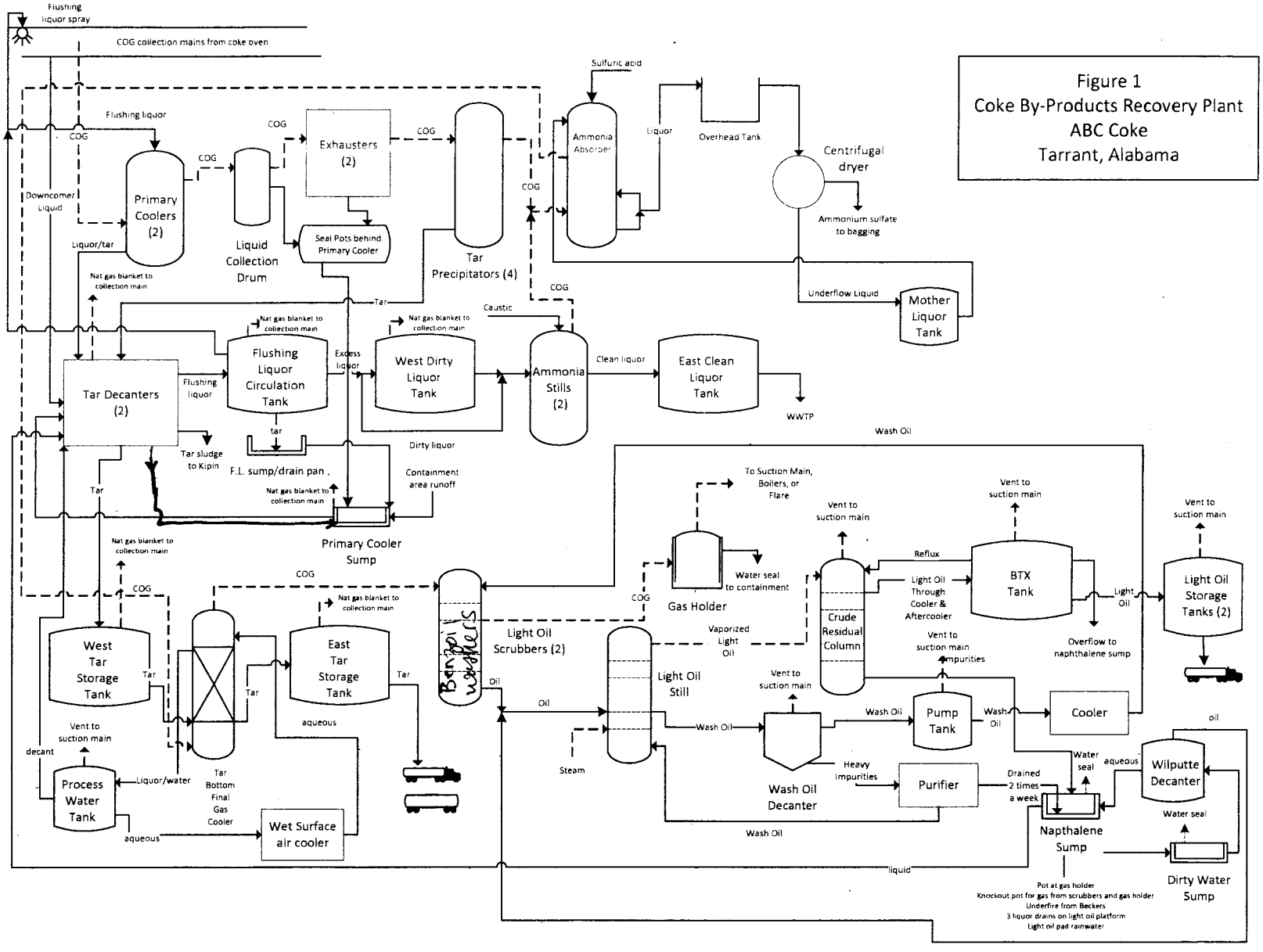
Figure 1
Coke By-Products Recovery Plant
ABC Coke
Tarrant, Alabama
Flushing liquor spray
COG collection mains from coke oven
Flushing liquor
COG
Downcomer Liquid
Liquor/tar
Primary Coolers (2)
Liquid Collection Drum
Exhausters (2)
Seal Pots behind Primary Cooler
Tar Precipitators (4)
Sulfuric acid
Ammonia Absorber
Liquor
Overhead Tank
Centrifugal dryer
Ammonium sulfate to bagging
Underflow Liquid
Mother Liquor Tank
Nat gas blanket to collection main
Tar
Caustic
Flushing Liquor Circulation Tank
Excess liquor
West Dirty Liquor Tank
Ammonia Stills (2)
Clean liquor
East Clean Liquor Tank
WWTP
Tar Decanters (2)
Flushing liquor
Tar sludge to Kipin
F.L. sump/drain pan
tar
Dirty liquor
Containment area runoff
Primary Cooler Sump
Wash Oil
To Suction Main, Boilers, or Flare
Vent to suction main
Gas Holder
Water seal to containment
Reflux
Light Oil Through Cooler & Aftercooler
BTX Tank
Light Oil
Light Oil Storage Tanks (2)
Crude Residual Column
Overflow to naphthalene sump
Vent to suction main impurities
West Tar Storage Tank
East Tar Storage Tank
Tar Bottom Final Gas Cooler
aqueous
Light Oil Scrubbers (2)
Vaporized Light Oil
Light Oil Still
Oil
Steam
Wash Oil
Wash Oil Decanter
Heavy impurities
Purifier
Pump Tank
Cooler
Drained 2 times a week
Water seal
Napthalene Sump
Wilputte Decanter
oil
Dirty Water Sump
Process Water Tank
decant
Liquor/water
Wet Surface air cooler
liquid
Pot at gas holder
Knockout pot for gas from scrubbers and gas holder
Underfire from Beckers
3 liquor drains on light oil platform
Light oil pad rainwater

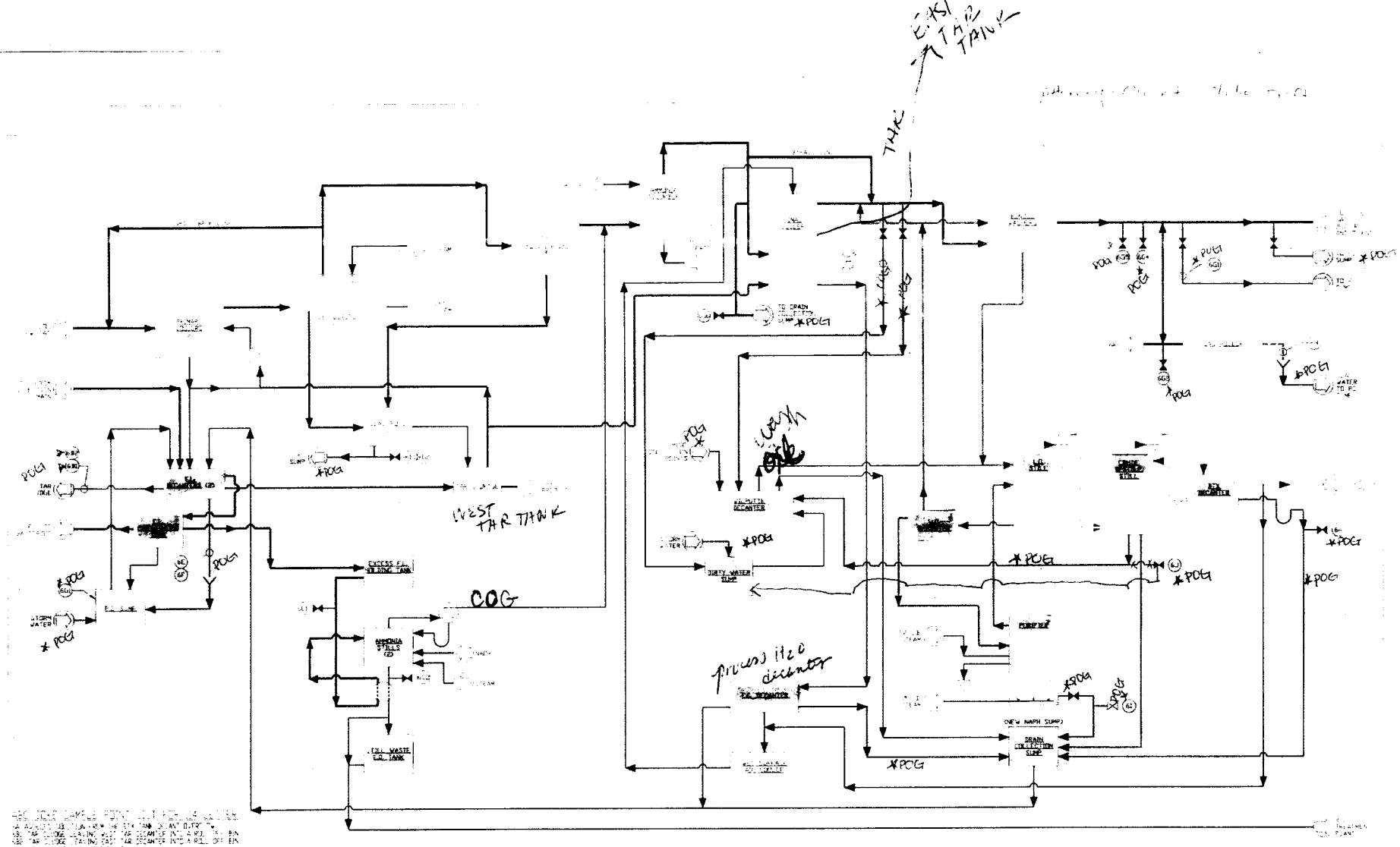

⇒ waste streams into waste management units or waste management units

⇒ these process waste/units (per subpt L)

* note if all sumps + streams in enclosed, streams are still waste, however L allows to count @ exit of ammonia stills if all streams secure

TETRA TECH
ENGINEERING SERVICES GROUP
Pittsburgh, Pennsylvania 15220-3745

make a box diagram for each waste stream & process vessel.
- w/ narative of what is waste stream & not & why
- label w/ violations
- penalties - look @ calculations.
↳ per subpart.

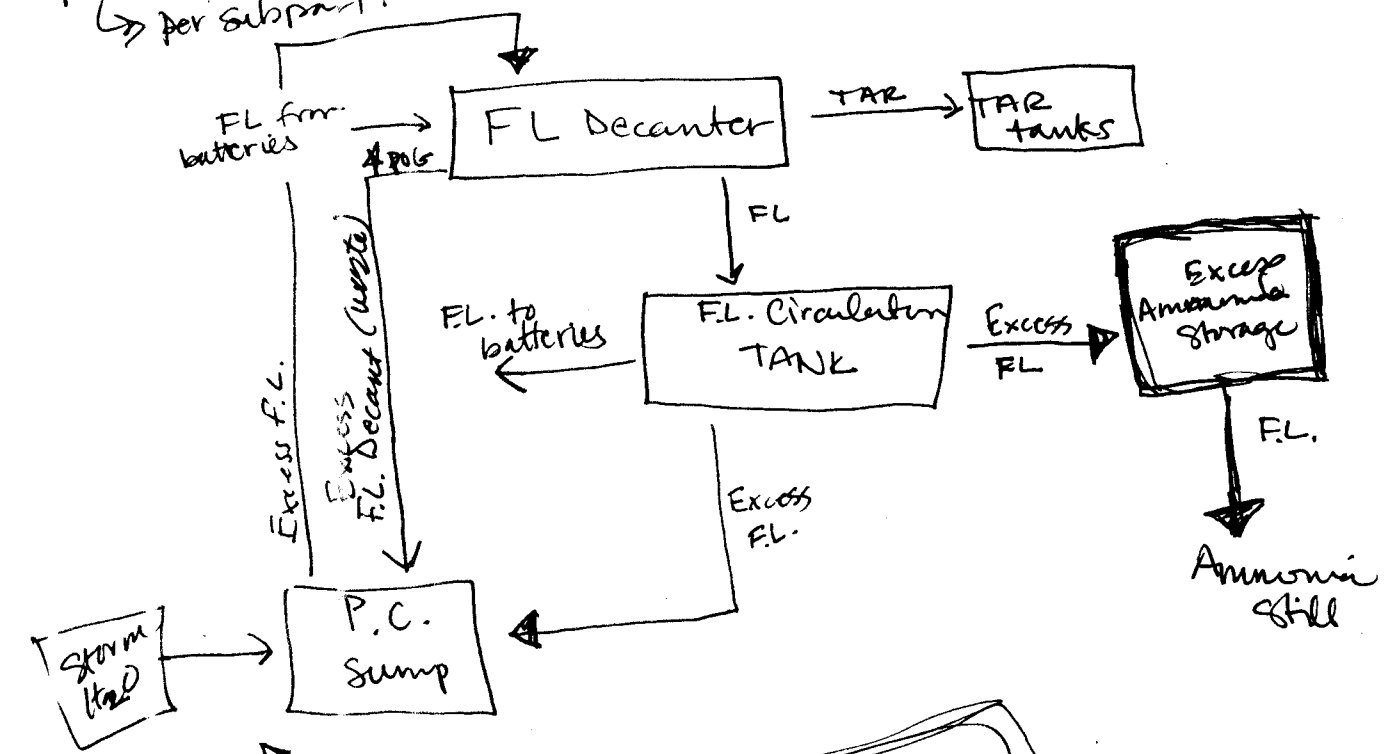

F.L. is liquid content from coal and is always created. There will always be excess flushing liquor b/c there is always H_2O content.

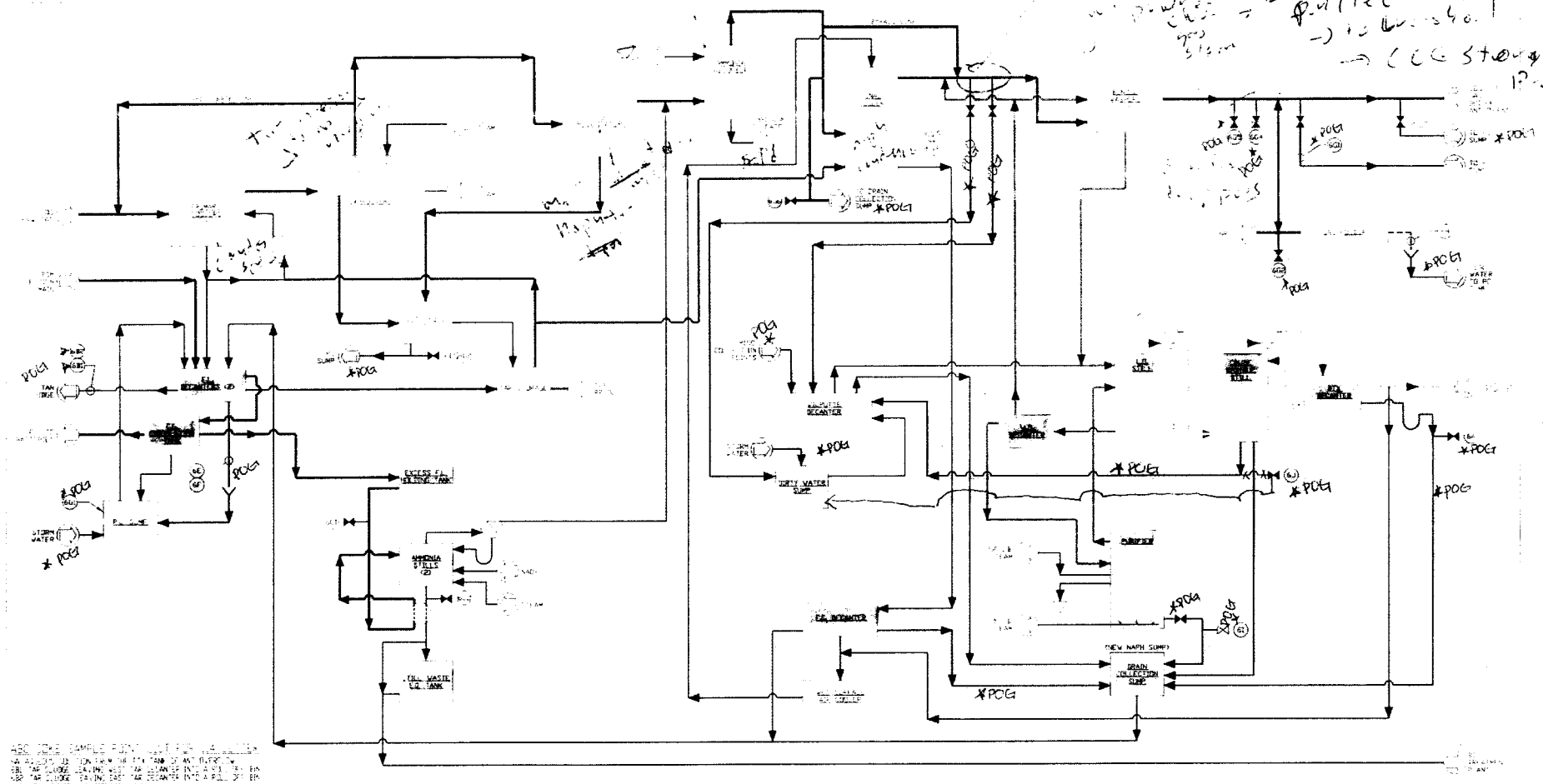

⇒ waste streams into waste management units or waste management units

⇒ process vessels/units (per subpt L)

* note if all sumps + streams in + enclosed, streams are still waste, however L allows to count @ exit of ammonia stills if all streams "sour"

TETRA TECH
ENGINEERING SERVICES GROUP
Pittsburgh Pennsylvania 15220-2745