DRAFT
560964
970004 - R8 SDMS

DRILLING ACTIVITIES REPORT
FOR PROSPECTOR SQUARE, PARK CITY, UTAH

The Silver Creek Tailings/Prospector Square site is located within the city limits of Park City approximately 30 miles east of Salt Lake City. The site is currently being investigated by the state of Utah and EPA through a memorandum of agreement (Appendix B). The USGS Water Resources Branch and Ecology and Environment Inc. Field Investigation Team were requested by the two principle investigators to conduct a drilling and well installation program at the site. The USGS was requested by the state of Utah to oversee well installation at the Silver Creek site, while E&E was requested to subcontract the drilling and to supervise the drilling program.

There were three phases of the drilling conducted at Prospector Square, Park City, Utah. The first phase was conducted during July 15-23, 1987. The second phase was conducted during July 27-August 5, 1987 and the third phase was conducted during August 13-21, 1987. The drilling was subcontracted to the Earth Data Acquisition Group (EDAG) of Denver, Colorado under TDD F08-8611-34D.

FIT arrived onsite July 15, 1987 at 8:00 a.m. and met with Jim Mason, United States Geological Survey (USGS) and Alton Schoonmaker of EDAG, topics of discussion were the site safety plan and proposed drilling schedule. The site safety meeting was conducted, all participants signed the release form and drilling began on PS-MW-16 at 10:30 a.m. EDAG was equipped with a CME-75 hollow stem auger rig (HSA) with a downhole hammer. Prior to commencing drilling, the USGS, in conjunction with Park City representatives had utilities checked and received final permission from Park City Engineer, Ron Ivie to drill and install wells on city property.

A. SHALLOW ALLUVIAL MONITORING WELLS

Eleven shallow monitoring wells were installed at various locations in the Prospector Square area (Figure 1). Selection of the well locations were based on professional judgment of the USGS Hydrology Branch, Salt Lake City, Utah. A summary of shallow alluvial well logs and completions is presented in Appendix A.

The objectives of installing the shallow alluvial wells were:

- To define water table elevations, aquifer permeabilities, gradients and flow directions.
- To document lateral and vertical extent of contamination.
- To provide geological information on the subsurface conditions.

Installation of 11 shallow monitoring wells occurred during the three drilling periods. The following is the breakdown, including the date and type of drilling and the number of wells installed.

DATE	TYPE OF DRILLING	WELLS INSTALLED
7/15-7/23/87	Hollow stem auger (HSA)	PS-MW-1s, PS-MW-2, PS-MW-4, PS-MW-6, PS-MW-5s, PS-MW-7 (6)
7/27-8/24/87	HSA	PS-MW-3, PS-MW-9, PS-MW-5 PS-MW-10, PS-MW-1D (5)
8/13-8/21/87	HSA w/casing advancer	PS-MW-2D, PS-MW-11 (2) Boreholes PS-BH-001, PS-BH-002 (2)

A CME 75 hollow stem auger drilling rig was used to drill the above mentioned boreholes. The boreholes were advanced with a 7 5/8" hollow stem auger, with split spoon samples taken at 5.0′ intervals unless field conditions warranted otherwise. Samples of the unconsolidated sediments were obtained using a 2′, 18" or 24" split spoon barrel. Geologic descriptions of

the samples were made immediately at the time of collection and a detailed geologic log was prepared. Logs are provided in Appendix A.

If a sample was collected for analysis, the sample was composited in a stainless steel bucket, the sample was placed in an 8 ounce glass jar with a teflon lined lid. The sample was labeled with the appropriate sample tag including the samples name, the date, TDD #, well number and depth. The lid was taped, the sample placed in a plastic sample bag, then placed in appropriate sample containers under chain of custody.

Drill spoils produced during the drilling program were containerized in 55 gallon drums and stored at the Summit County Landfill with permission from Ron Ivie. Spoils were containerized from all boreholes. Screening samples were collected and analyzed by the state lab for metals and E.P. toxicity.

B. DEEP ALLUVIAL WELLS

Two deep alluvial wells were installed upgradient of Prospector Square. Well locations were based on locations outlined in the USGS project proposal for Prospector Square. A summary of deep alluvial well logs and completions are presented in Appendix A.

The objectives of installing the deep alluvial wells were:

- To determine baseline water quality in the deep alluvium upgradient of Prospector Square.
- To provide geologic information of the alluvium beneath the shallow aquifer and wells.
- To determine the hydraulic gradient between the deep and shallow alluvium.

C. TAILINGS DRILLING

In addition to shallow alluvial wells, two shallow boreholes were drilled to the base of the tailings (PS-BH-001 and PS-BH-002). The locations of the boreholes were chosen to assist in deteriming the horizontal and vertical distribution of tailings in the Prospector Square area in partial fulfillment of SARA, Section 125. The 2 shallow holes were drilled to depths of 9.6′ and 8.0′ respectively. The borings were drilled down to native material. The boreholes were backfilled with a mixture of native material and bentonite. Borehole logs are contained in Appendix A.

D. WELL COMPLETION

Wells were constructed of 2" inside diameter Schedule 80 PVC casing with either 10 or 20 slot screen. Shallow wells were drilled approximately 15′ into the water table and a five foot section of screen was set five feet above the bottom of the well. A five-foot silt trap was installed below the screen. The annular space around the screens were backfilled with 10/20 Colorado silica sand to five feet above the screen. A minimum 2 foot bentonite seal was emplaced on the sand and hydrated. The placement of this seal was to prevent any downward migration of surface water. The annular space around the well casing was grouted with cement and 4% bentonite slurry to within 4 feet of the surface. A four feet locking steel surface casing was placed in the hole, and a neat cement surface seal was then emplaced. The casing was set flush with the ground surface.

Deep alluvial wells were installed and completed in the same manner as shallow alluvial wells except for the following procedures:

- 1 ten foot section of 20 slot screen was set at total depth without the use of a silt trap below the screen.
- Setting of the bentonite and cement seals was accomplished via a 1" tremie line.

E. WELL DEVELOPMENT

The wells were developed by use of a Brainard-Killman pitcher pump. All wells were pumped until temperature, pH, specific conductance and flow rate were constant. Several (3-7) casing volumes of water were evacuated before chemical equilibria was obtained. All development water was containerized and stored at the county landfill pending analysis for hazardous waste characterization.

F. DECONTAMINATION

Upon completion and development of each well, equipment used in the drilling process in as steam cleaned and rinsed with water. The steam cleaning was accomplished by using a Hotsry Steam cleaner with a soap and water mixture. The equipment was rinsed with clean water to remove any soap residue.

G. WELL SURVEYING

At the direction of E&E, all wells and borings were surveyed to an existing benchmark for horizontal and vertical control by J.J. Johnson and Associates of Park City, Utah. Table 1 contains these data. Water level measurements were recorded subsequent to this survey by the USGS. The USGS will develop a potentiometric map showing ground water flow direction.

DRILL LOG

PROJECT Prospector Square
TDD NO. FDS - 3611 - 34D
DATE 8-1-87
WELL/BORING PS-MW 1D
LOCATION Kearns & Hampton Blvd.
LOGGER M. Ferency
DRILL METHOD HSA - Split Spoon Drives
Park City, UT
PAGE ____ OF ____
WATER LEVEL FIRST ENCOUNTERED 32.2
FINAL 33.25
ELEV. 6791.87

DEPTH IN FEET	LITH COL	SAMPLE TYPE IDENT.	MOISTURE CONTENT WATER LEVEL	LITHOLOGIC DESCRIPTION	NOTES
10, 20, 30			initial, Final	Fill Sand, gravelly, dry, brown. Gravel fine to coarse, sandy, clayey. Med. dense to dense, brown to reddish brown, moist, with clayey lenses at 6', 13-15', 20-23', 24-26', 35' (GC)	Upper 45' was similar to the PS-MW-1A, which was logged with 9 Spl. Spoon Drives.
40, 50, 60		SS		Sand, fine to coarse, gravelly, fine to coarse with scattered cobbles, sl. clayey, dense, wet, brown (SC/SP)	Recovery: 50-51.0' = 100% SS = 30-40
				More gravelly at 54', 64-65', 66-67'	
70, 80		SS, SS		Clay, low to med. plasticity, sandy-silty, fine to coarse grained sl. gravelly to scattered gravel with cobbles, very stiff, moist to wet, brown (CL)	Recovery: 80 - 82' = 100% SS = 30-6-9-10
100	TDD	85.5'		Shale reddish brown, friable, (Woodside Shale); moderately hard from 85.0', moist	Recovery: 85 - 85.5' = 100% SS = 160/per 3", 230/3"

DRILL LOG

PROJECT Prospector Square JOB NO. F08 8611-34D DATE 7-16-87

WELL/BORING PS-MW-2 LOCATION Pacific Bridge WELL LOGGER K. Moll

DRILL METHOD HSA split Spoon Drives PAGE 1 OF 1

WATER LEVEL FIRST ENCOUNTERED 31.0' FINAL 32.0 ELEV. 6758.44

DEPTH IN FEET	LITH COL	SAMPLE TYPE IDENT.	MOISTURE CONTENT WATER LEVEL	LITHOLOGIC DESCRIPTION	NOTES
				Fill, sand gravel, cobbles	
				Gravel, fine-coarse sandy clay medium dense moist with clay lenses cobbles to 6"	Drive 25% recovery
10					Drive 80% recovery
20					Drive 40% Recovery
30			Initial ▽ ▽ Final	Clay - brown-red low-medium plasticity, sandy-silt very fine-fine sand small amount gravel well sorted small amt silt	Drive 100% Recovery
40					Drive 50% Recovery
				—TD 44.5'	

DRILL LOG

PROJECT Prospector Square | TDD NO. F08-8611-34D | DATE 8/20-21/87

WELL/BORING PS-MW-2D | LOCATION West of Corner Shop, Park City, UT | LOGGER M. Pecony

DRILL METHOD HSA, Air ROTARY | PAGE ____ OF ____

WATER LEVEL FIRST ENCOUNTERED 33.0' | FINAL 30.0 | ELEV. ____

DEPTH IN FEET	LITH COL	SAMPLE TYPE IDENT.	MOISTURE CONTENT WATER LEVEL	LITHOLOGIC DESCRIPTION	NOTES
2'		HSA cuttings		Fill: Gravel, sandy, fine to coarse dense, dry, gray (GM)	Some fine grained silty sand, gray tailings material observed at site vicinity of the boring
25			Final	Gravel, fine to coarse, sandy fine to coarse, dense, moist, brown, with cobbles (rounded to subangular) (GP)	
30		SS 12-22-22	Initial		Core recovery 35.0-36.5' = 100%
40				Sl. clayey to clayey at 20', 25-40' to gravelly clay 40-54' (GC)	
54				Clay, sandy fine to coarse, stiff, moist, brown, scattered gravel up to cobble size (CL)	
60 62					
77				Clay, sandy, gravelly fine to coarse stiff, moist, brown (CL)	
90		HSA SS	100-200	Gravel, sandy, fine to coarse, clayey, dense, moist, brown (rounded to subangular gravel with cobbles) (GC)	Core recovery 90.0'-91.0' = 80% Bouncing
97		AIR ROTARY			Start air rotary at 93'
120				Gravelly sand to sandy gravel, (SP/GP) fine to coarse with cobbles, dense moist to wet, brown, scattered clayey lenses (106', 112-113', 117.5-118') (some boulders of igneous rock (porphyry) and quartzite between 114-120')	Water discharge at 110' 0.8 gal/min 115' 1 gal/min 120' 1.7 gal/min
120.5'					
	TDD 125.0'			Shale, reddish brown silty, fine grained, low hardness, wet, blocky	Wood side stable

Air Rotary Sampling at 5' interval (93' - 125')

DRILL LOG

PROJECT	Prospector Square	JOB NO.	FOE 2611-34D	DATE	7-28-87
WELL/BORING	PS- MW-3	LOCATION	Highway 224 East of	LOGGER	K. Moll
DRILL METHOD	HSA Split Spoons		Park City High School	PAGE	1 OF 1
WATER LEVEL FIRST ENCOUNTERED	22.95	FINAL	21.97	ELEV.	6743.35

DEPTH IN FEET	LITH COL	SAMPLE TYPE IDENT.	MOISTURE CONTENT WATER LEVEL	LITHOLOGIC DESCRIPTION	NOTES
				Topsoil	Continous Drives 2.0' intervals 100% recovery
				Fill, Sand, yellow well sorted sand limonite staining	
				Fill Clay dark brown low plasticity w pebbles & gravel	
10				Fill clay - Red-medium plasticity w pebbles & gravel angular	
				Clay - Red medium plasticity w very fine grained sand & pebbles rounded - angular	Drive 100% recovery
20			Initial		
				Gravel fine - course, angular-subrounded poorly sorted Moist	Drive 80% recovery Blow counts 3-4-4
30				Clay - Brown medium-high plasticity, small amt pebbles	
				Gravel - as above	Drive 40% recovery
				TD 36.0'	

DRILL LOG

PROJECT Prospector Square | JOB NO. F08 8611-34 D | DATE 7-20-87

WELL/BORING PS-MW-5 | LOCATION SIDEWINDER @ | LOGGER K. MOLL

DRILL METHOD HSA Split Spoon | Belle Starr | PAGE 1 OF 1

WATER LEVEL FIRST ENCOUNTERED 22.5 | FINAL 18.0 | ELEV. 6741.04

DEPTH IN FEET	LITH COL	SAMPLE TYPE IDENT.	MOISTURE CONTENT WATER LEVEL	LITHOLOGIC DESCRIPTION	NOTES
				Fill brown dirt sand Lt brown-tan, medium-grained well sorted, subrounded	Drives - 2.0' Continous G.L. - 8.5'
				Same as above, grades to coarser sand w/ gravel Tailings	
7.5				Gravel Cobbles to 3" small subrounded-rounded and silt & clay	Drive 10-12.0 60% recovery
				Clay lens @ 12.7	
15.0				Clay - Red brown medium plasticity moist	
			Final	Clay Fat, Red, highly plastic	
				Sand & pebbles interbedded	
			Initial	NO Return	
22.5					0% recovery
				Gravel - cobbles to 4" rounded	
					100% recovery
30				Clay - Red-brown fat highly plastic w interbedded fine - very fine sand	
				TD 34.0'	
35					

DRILL LOG

PROJECT Prospector Square | JOB NO. F08 8611-340 | DATE 7-20-87

WELL/BORING PS-MW-6 | LOCATION Doc Holiday @ Little Bessie Ave | LOGGER K. Mock

DRILL METHOD HS A Split Spoons | PAGE 1 OF 1

WATER LEVEL FIRST ENCOUNTERED 14.0' | FINAL 13.0' | ELEV. 6731.48

DEPTH IN FEET	LITH COL	SAMPLE TYPE IDENT.	MOISTURE CONTENT WATER LEVEL	LITHOLOGIC DESCRIPTION	NOTES
				Dirt, dark brown, silty sandy clay	Drives 2.0' continuous B.C 10, 11, 14, 15
				Gravel, sandy silt w/ cobbles rounded-subrounded	20% recovery B.C 4, 6, 11, 25
5				Clay - red silty, medium plasticity dry w cobbles	100% recovery B.C 6, 10, 15, 20
				Gravel - quartzite, serpentinite chips fine-coarse rounded-subrounded good sorting, silty sand w/ small amt clay	
10				SAME AS above	
				Clay - brown-red medium plasticity, moist @ 13.0', interbedded lenses v.f-f sand rounded and well sorted	Drive 14.0-16.0 60% recovery
15				SAND - v.f-f, well rounded rounded good sorting with lenses of red brown clay	
20				Gravel - fine - coarse, sand clayey, cobbles - rounded subrounded ½"-4"	
25				30% return	
				TD 29.0'	

DRILL LOG

PROJECT Prospector Square | JOB NO. FOE 8611-34 D | DATE 7-20-87

WELL/BORING PS-MW-7 | LOCATION Buffalo Bill Ave | LOGGER K. Moll

DRILL METHOD HSA (split spoon) | PAGE 1 OF 1

WATER LEVEL FIRST ENCOUNTERED 15.2 | FINAL 12.0' | ELEV. 6722.46

DEPTH IN FEET	LITH COL	SAMPLE TYPE IDENT.	MOISTURE CONTENT WATER LEVEL	LITHOLOGIC DESCRIPTION	NOTES
				Fill sandy, dry, brown with small amount clay	Drives 2.0' continuous G.L. - 8.0'
				Clay - low plasticity, brown pebbles w sandy silt	
5				Gravel, coarse-fine sm amt clay cobbles w/ qtz chips. subrounded-rounded poorly sorted, 75% dk minerals dry	
10			Final		
			Initial		Drive 14.0-15.5 30% recovery
15				Gravel. Coarse-fine, sandy clay medium plasticity small amt silt, qtz, ss chips cobbles to 4" subangular-rounded poorly sorted	
20				Fine-medium, tan well sorted rounded to subrounded predominately qtz grains	
				Sand. high plastic clay. Fat blue-gray clay wet	
25					

TD 25.0

DRILL LOG

PROJECT Prospector Square | JOB NO. FOR 8611-34 D | DATE 7-20-87

WELL/BORING PS-MW-4 | LOCATION Prospector Square @ Silver Creek | LOGGER K. Moll

DRILL METHOD HSA Split Spoon | PAGE 1 OF 1

WATER LEVEL FIRST ENCOUNTERED 27.99 | FINAL 29.2 | ELEV. 6773.42

DEPTH IN FEET	LITH COL	SAMPLE TYPE IDENT.	MOISTURE CONTENT WATER LEVEL	LITHOLOGIC DESCRIPTION	NOTES
				Fill Asphalt Pitch Dirt Dark brown w/ cobbles	Drive 2.0' samples
				SAND - Tan - beige medium coarse well sorted and rounded	
				Gravel fine - medium, sandy, clayey - medium plasticity with fine - medium sand clay lenses throughout pebbles to 1/2"	Drive 100% recovery
10				Clay - Red medium plasticity w/ fine - medium sand interbedded Quartz and K-Spar pebbles to 1/2"	Drive 100% recovery
20				Gravel fine - coarse angular - subrounded	
				Clay as above	
			Initial ▽ ▽ Final	Gravel, sandy fine - coarse moist	Drive 60% recovery
30				NO Return	Driver 0% recovery
				Sand Reddish - brown fine - medium rounded - subrounded with cobble, small amount clay lenses	
				No Return	Drive 0% recovery
40				Gravel - fine - medium, poorly sorted pebbles with clay interbedded	Drive 80% recovery
				TD 45.0'	Drive 80% recovery

DRILL LOG

PROJECT Prospector Square | JOB NO. F08 2611-340 | DATE 8-4-87

WELL/BORING PS-MW-8 | LOCATION Comstock - CUL DE SAC | LOGGER M. Peccny

DRILL METHOD 4SA SPlit Spoons | PAGE 1 OF 1

WATER LEVEL FIRST ENCOUNTERED 26.6 | FINAL | ELEV. 6751.41

DEPTH IN FEET	LITH COL	SAMPLE TYPE IDENT.	MOISTURE CONTENT WATER LEVEL	LITHOLOGIC DESCRIPTION	NOTES
				Sand, gravelly fine - coarse with cobbles, well sorted dense slightly moist gray	5-8-8-9 Blows 100% recovery 12-13-15-10 100% recovery
				Gravel subrounded sandy silt, loose dark brown fine grained - coarse	4-5 100% recovery
10				Gravel, fine-coarse, sandy with cobbles dense moist brown silt clayey	35-35-50-35 100% recovery
				Clay - Low plasticity, sandy fine coarse silty loose moist brown	
				Gravel - fine-coarse clayey low plasticity silty, moist dense brown with cobbles subangular	Drive - 100% recovery 20-40-50/5
20				Silt - clayey, with gravel subangular - subrounded with sand lenses fine - coarse	Drive 100% recovery
				Gravel - fine - coarse with cobbles Dense, silty, sl clayey, moist brown (subangular few subrounded	
30					Drive 100% recovery 33-50
40				TD 41.0'	

DRILL LOG

PROJECT Prospector Square | JOB NO. FOE 7611-340 | DATE 7-29-87

WELL/BORING PS-MW-9 | LOCATION City Park east of Prospector Square | LOGGER K. McCu

DRILL METHOD HSA Split Spoons | PAGE 1 OF 1

WATER LEVEL FIRST ENCOUNTERED 12.0 | FINAL | ELEV. 6707.90

DEPTH IN FEET	LITH COL	SAMPLE TYPE IDENT.	MOISTURE CONTENT WATER LEVEL	LITHOLOGIC DESCRIPTION	NOTES
5				Tailings. Pyrite, Arsenopyrite Minerals SAND Fine-very Fine grained well sorted & rounded	Drives 0-2.0' 2.-4.0' 4.0-6.0' 100% recovery
				Clay- Dark brown organic	
				clay- same as above	
10			Initial ▽	Gravel - fine - coarse with Cobbles, subrounded rounded, poorly sorted interbedded lenses of sandy clay	
15				Bedrock, Shale Red friable parts at bedding planes slightly weathered TD 16.5	Drive 15.0-16.0 WOODSIDE Shale 50/6 5"

DRILL LOG

PROJECT Prospector Square
JOB NO. F08-8611-34 D
DATE 7-31-87
WELL/BORING PS-MW-10
LOCATION Highway 224, east of Park City
LOGGER K. Mull/M. Peceny
DRILL METHOD HSA Split Spoons
PAGE 1 OF 1
WATER LEVEL FIRST ENCOUNTERED 1.5'
FINAL 2.0'
ELEV.

DEPTH IN FEET	LITH COL	SAMPLE TYPE IDENT.	MOISTURE CONTENT WATER LEVEL	LITHOLOGIC DESCRIPTION	NOTES
				Sand fine-coarse, w gravel with silty sand lenses	Drives 0-4.0 100% recovery
5				Gravel - fine-coarse, subrounded Poorly sorted	
10				Gravel - fine-coarse poorly sorted Subrounded	Drive No Recovery
				BEDROCK - Shale Friable, weathered parts easily @ bedding planes. Dark Reddish brown TD 13.0'	Drive 70/6 40 Recovery

DRILL LOG

PROJECT Prospector Square | TDD NO. FNS-8611-34D | DATE 8-13-87

WELL/BORING FS-MW-11 | LOCATION East from High School | LOGGER M. Pacency

DRILL METHOD HSA + Split Spoon Barrels | Park City, UT | PAGE 1 OF 1

WATER LEVEL FIRST ENCOUNTERED 2.8 | FINAL 1.77 | ELEV.

DEPTH IN FEET	LITH COL	SAMPLE TYPE IDENT.	MOISTURE CONTENT WATER LEVEL	LITHOLOGIC DESCRIPTION	NOTES
2			Final	Fill. Sand, gravelly, loose, dry, gray with cobbles	
4			Initial	Silt, fine grained clayey, low plasticity, sl. sandy, med. dense dark brown to black, organic	
6					
8				Clay, highly plastic, sl. sandy to sandy fine grained, moist to wett, gray to dark gray	SS = 9-15-17 (per 6" each) Recovery 10.0-12.5' = 100%
10		SS			
12				Sand, gravelly, fine to coarse with scattered cobbles, med. dense, moist to wett, gray	
14					
16					
18					
20					SS = 9-10-12 (per 6" each) Recovery 20-22.0' = 100%
TDD 22.0		SS			
22					

DRILL LOG

PROJECT Prospector Square | TDD NO. FOS-8611-34D | DATE 8-21-87

WELL/BORING DS-34-001 | LOCATION Pr. Square North | LOGGER M. Feeney

DRILL METHOD Split Spoon Drives (SS) | Park City, UT | PAGE ____ OF ____

WATER LEVEL FIRST ENCOUNTERED Dry | FINAL Dry | ELEV. ____

DEPTH IN FEET	LITH COL	SAMPLE TYPE IDENT.	MOISTURE CONTENT WATER LEVEL	LITHOLOGIC DESCRIPTION	NOTES
1		SS		TOPSOIL FILL - Sandy gravel, fine to coarse loose, dry, brown, organic (GP/SP)	Disturbed natural soil Recovery 0 - 2' = 100% SS = 3-12-11-11 Blow count
2				FILL - Sand, fine to coarse, silty, sl. clayey, loose to med. dense moist, dark brown, organic to sl. organic (SP/SM)	
3		SS			Recovery 2.0 - 4.0 = 100% SS = 6-7-14-14
4				FILL - Sand-gravel, fine to coarse with cobbles, loose to med. dense, moist, dark brown	
5		SS		Some gravel with iron staining added (unprocessed mine tailings ?) (SP/GP)	Recovery: 4.0 - 6.0 = 100% SS = 9-5-9-9
6					Soil (EPA) sample 3.5 - 4.0 Soil (EPA) sample 4.0 - 5.5
7		SS		Clay, highly plastic, sandy, fine grained, stiff, moist, dark brown (CH)	Recovery: 6.0 - 7.6 = 100% SS = 6-6-30
8		SS			
9				FILL: Sand, gravelly, fine to coarse as above, rounded to angular SP/GP	SS = 45-30-45-30 Recovery 7.6 - 9.6 = 100%
10		TDD 7.6'		Clay - as above Gravel fine to coarse, sandy, clayey dense, moist, brown, with cobbles	Note: Hole was backfilled with natural soil and road gravel

DRILL LOG

PROJECT Prospector Square
TDD NO. F08-8611-34D
DATE 8-21-87
WELL/BORING PS-3H-002
LOCATION Pr. Square-South East Park City, UT
LOGGER M. Peceny
DRILL METHOD Split Spoon Dnnes(SS)
PAGE ___ OF ___
WATER LEVEL FIRST ENCOUNTERED Dry
FINAL Dry
ELEV. ___

DEPTH IN FEET	LITH COL	SAMPLE TYPE IDENT.	MOISTURE CONTENT WATER LEVEL	LITHOLOGIC DESCRIPTION	NOTES
	//////			TOPSOIL Clay, sandy, stiff, dry, gray	
1		SS		Tailings: Sand fine to med. grained silty to sl. silty, loose to med. dense dry to sl. moist, gray with yellowish brown (limonite) lenses rich on pyrite (at 3.5-4.0) (SM)	SS = 6-8-12-11 Recovery: 0-2.0' = 100%
2					
3		SS			SS = 6-8-10-10 Recovery: 2.0-4.0' = 100%
4					
5		SS			SS = 7-5-5-7 Recovery: 4.0-6.0' = 100%
6				Clay, high plasticity, sl. sandy fine grained, stiff to med. stiff, moist, dark brown to black (5.0-6.0), lt. gray to gray (6.0-8.0) with scattered gravel up to cobble size (CH)	
7		SS			SS = 8-10-15-28 Recovery: 6.0-8.0' = 100%
8	TDD	8.0'			
9					
10					

WELL/PIEZOMETER COMPLETION DIAGRAM

Project: Prospector Square
Location: Park City, UT
Geologist: M. Pacany
Depth to Water: 33.25 feet (G.L.)

TDD No.: F08-2611-34D
Well Number: PS-MW-1D
Date(s) of Installation: 8-1-87
Elevation from Measuring Point: 6791.87

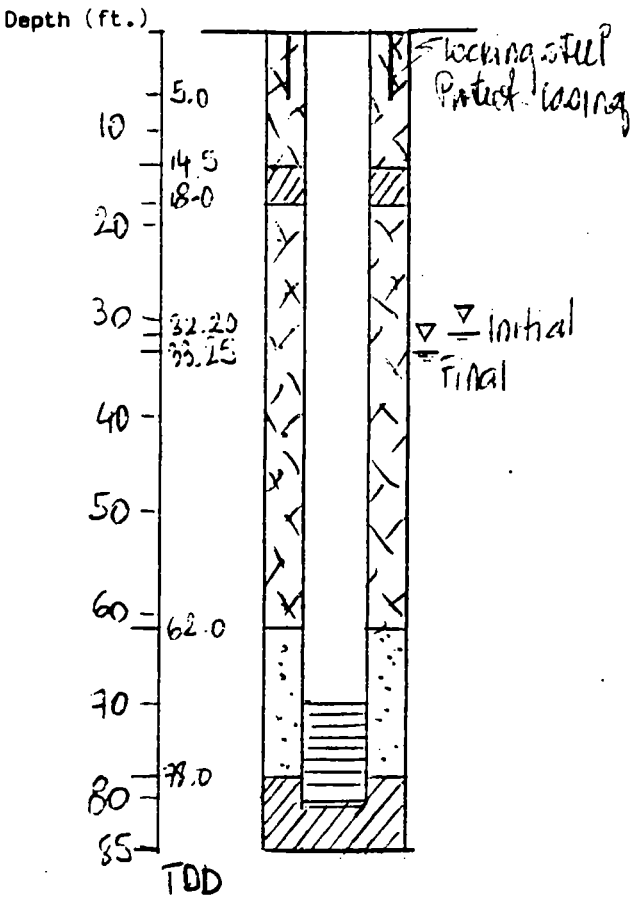

DRILLING SUMMARY:

Driller: E.D. G.G. - Alton Schoemaker
Rig Type: CME 75
Drilling Method: HSA
Bit(s): Tooth type
Drilling Fluid:

Surface Casing:
Hollow Stem/Drive Casing I.D. (in.): 4 1/4
Total Depth of Boring (ft.): 85.5
Borehole Diameter (in.): 7 7/8

WELL DESIGN:

Completion: Above Grade at / Below Grade
Basis: Geological Log ✓ Geophysical Log Type
Total Depth of Well (ft.): 80.3
Casing String(s): C=casing S=screen
C 80.3 - 80.0 | S 80.0 - 70.0
70.0 - 0

Casing: 2" PVC schedule 80
Screen: 2" PVC schedule 80 .010 slots

Centralizers: none
Gravel/Sand Pack: 78.0 to 62.0 feet
10-20 Mine Colorado Silica Sand
Bentonite Seal(s): 85.5 to 78.0 feet
18.0 to 14.5 feet
Bentonite (type): 1/4" Pellets
Backfill (cuttings): to feet
Cement Seal(s): 62 to 18 feet
14.5 to 0 feet
Cement Composition: 5% Bentonite (Volclay) + Portland Type II Cement
Protective Casing: 5.0 ft to 0 ft feet
Protective Casing Type: 6" Steel with locking cap
Other:

WELL DEVELOPMENT:

Method: Bailer
Duration: 1.5 hrs. Estimated production: 1.3 gpm
Water Appearance: Slightly muddy

Remarks:
Bedrock at 83.0 ft (roadside stake)

WELL/PIEZOMETER COMPLETION DIAGRAM

Project Prospector Square

Location Park City, UT

Geologist K. [illegible]

Depth to Water 33.25 feet (G.L.)

TDD No. 203-5611-34D

Well Number PS-MW-15

Date(s) of Installation 7-15-87

Elevation from Measuring Point 5791.87

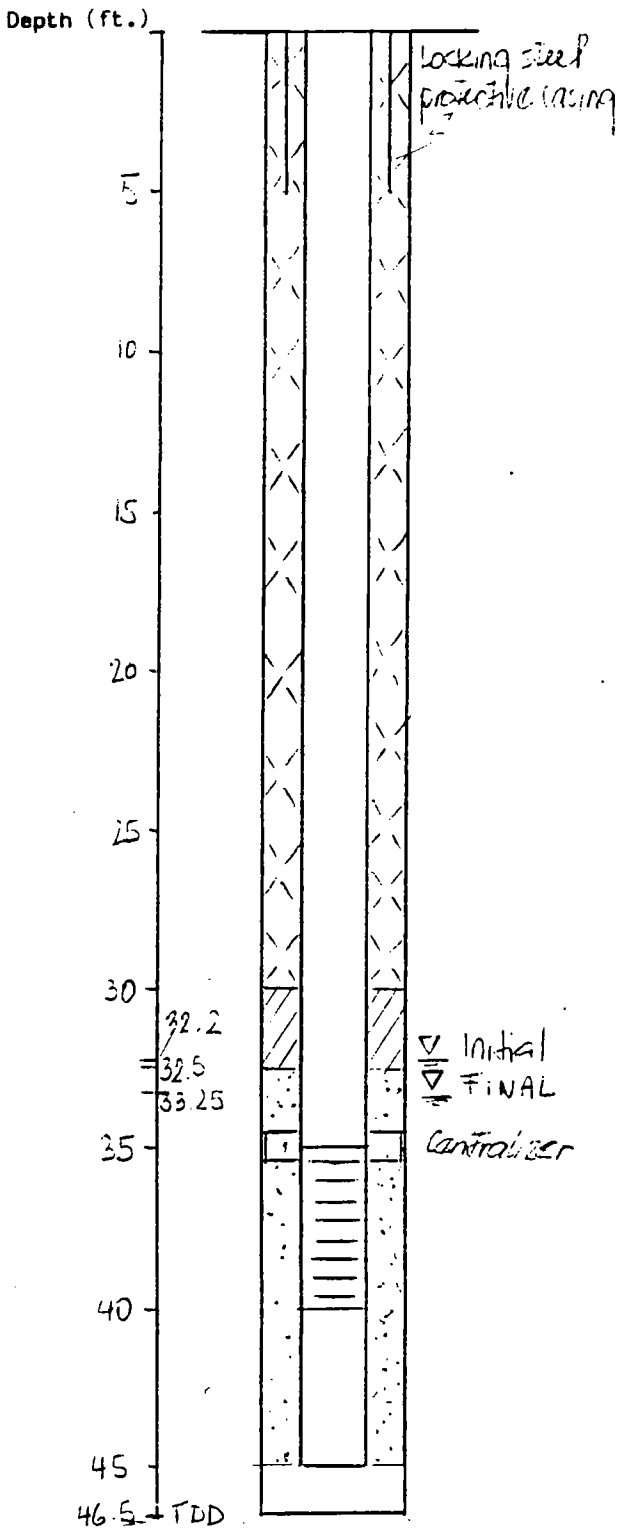

DRILLING SUMMARY:

Driller Earth D.A.G. - Alton Schoomaker

Rig Type CME 75

Drilling Method Hollow Stem Auger

Bit(s) Tooth type

Drilling Fluid None

Surface Casing

Hollow Stem/Drive Casing I.D. (in.) 4 1/4

Total Depth of Boring (ft.) 46.5

Borehole Diameter (in.) 7 3/4

WELL DESIGN:

Completion Basis: ~~Above~~ at Grade ✓ Below Grade

Geological Log ✓ Geophysical Log

Type

Total Depth of Well (ft.) 45

Casing String(s): C=casing S=screen

C - 45 - 40' | S - 35 - 40'

- 35' 0' | -

Casing: 2" Schedule 80 PVC 10' Sections

Screen: 2" Schedule 80 PVC 0.020 slots

Centralizers 1 at 35'

Gravel/Sand Pack 45 to 32.5 feet

10-20 Mesh Colorado Silica Sand

Bentonite Seal(s) 32.5 to 30 feet

to feet

Bentonite (type) 1/4" Pellets

Backfill (cuttings) to feet

Cement Seal(s) 30.0 to 0 feet

to feet

Cement Composition Portland Type II/Bentonite Slurry (4% Bentonite Powder)

Protective Casing 1.5 to 5 feet

Protective Casing Type Steel with locking cap

Other

WELL DEVELOPMENT:

Method Hand pump

Duration 1 hrs Estimated production 0.5 gpm

Water Appearance Slightly muddy (silt)

Remarks:

WELL/PIEZOMETER COMPLETION DIAGRAM

Project: Prospector Square
TDD No.: F08-8611-34D
Location: Park City, UT
Well Number: PS-MW-2D
Geologist: M. Pecany
Date(s) of Installation: 8/20-21/87
Depth to Water: 39.0 feet (G.L.)
Elevation from Measuring Point:

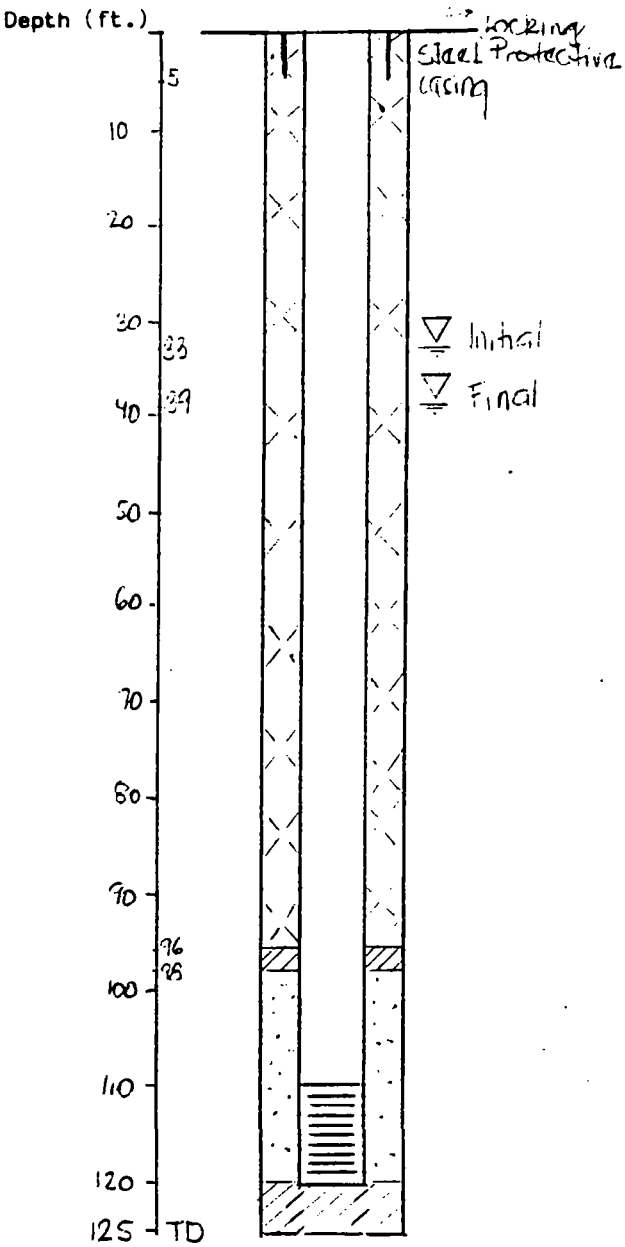

DRILLING SUMMARY:

Driller: Earth Ag. Data Group (Fox & Ass.) Alton Schoomaker
Rig Type: CME 75
Drilling Method: HSA, AIR ROTARY
Bit(s): TOOTH-TYPE, TRICONE TYPE
Drilling Fluid: None

Surface Casing:
Hollow Stem/Drive Casing I.D. (in.): 4 1/4" / 6 5/8"
Total Depth of Boring (ft.): 125
Borehole Diameter (in.): 8"

WELL DESIGN:

Completion Basis: ~~Above~~ at Grade ____ ~~Below~~ Grade ____
Geological Log: ✓ Geophysical Log: ____ Type: ____
Total Depth of Well (ft.): 120.4
Casing String(s): C=casing S=screen

C	120.4 - 120		S	120 - 110	
	110 - 0			-	

Casing: PVC 2", schedule 80, 10' sections
Screen: PVC 2", schedule 80, .010 slots
Centralizers: none
Gravel/Sand Pack: 120 to 98 feet
Colorado Silica Sand 10-20 Mesh
Bentonite Seal(s): 98 to 96 feet
120 to 125 feet
Bentonite (type): 1/4" Bentonite Pellets
Backfill (cuttings): NA to ____ feet
Cement Seal(s): 0 to 96 feet
to ____ feet
Cement Composition: Portland T II / Bentonite (gel X) Slurry
Protective Casing: 0 to 5 feet
Protective Casing Type: Steel 6 5/8"
Other:

WELL DEVELOPMENT:

Method: Hand Pump, Air Lift
Duration: 2 hrs Estimated production: 1.5 gpm
Water Appearance: Slightly muddy
Remarks: water discharge was measured through drilling from 110-120' deep zone with an average 0.8 - 1.7 gpm

WELL/PIEZOMETER COMPLETION DIAGRAM

Project [illegible]

Location [illegible]

Geologist [illegible]

Depth to Water 30.0 feet (G.L.)

TDD No. [illegible]

Well Number [illegible]

Date(s) of Installation [illegible]

Elevation from Measuring Point [illegible]

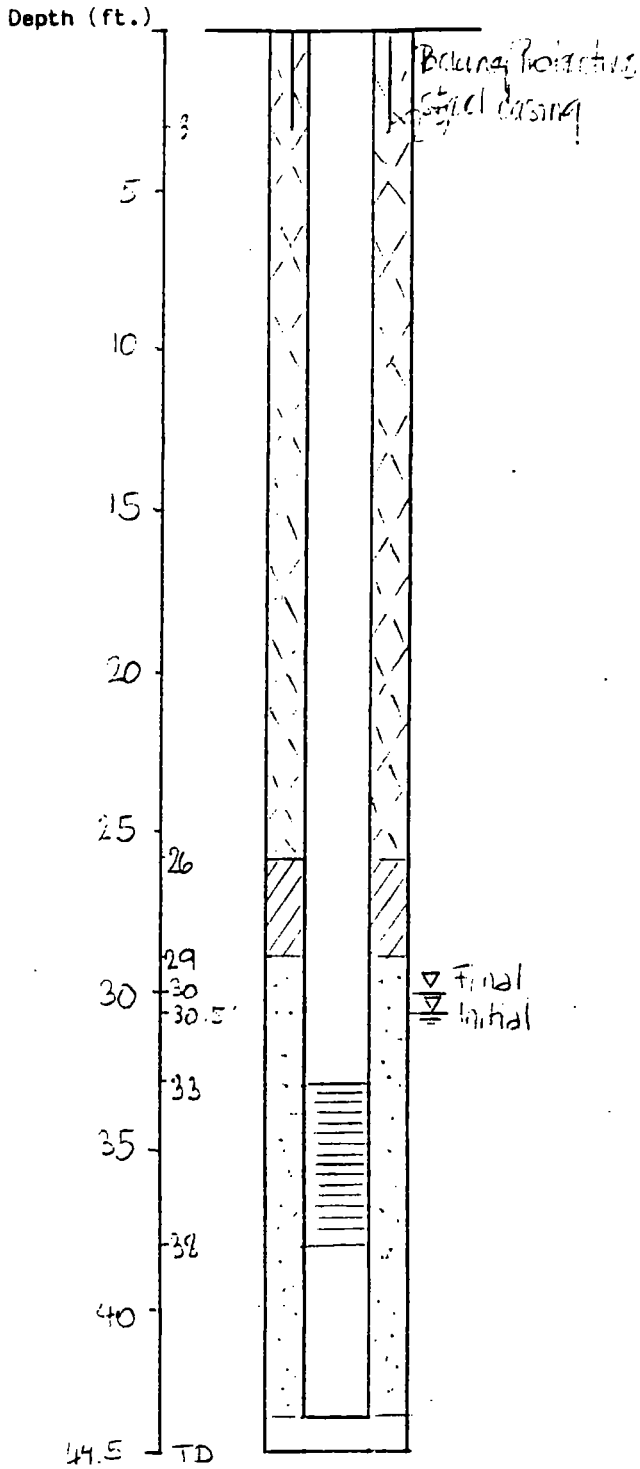

DRILLING SUMMARY:

Driller [illegible]

Rig Type [illegible]

Drilling Method [illegible]

Bit(s) [illegible]

Drilling Fluid [illegible]

Surface Casing

Hollow Stem/Drive Casing I.D. (in.) [illegible]

Total Depth of Boring (ft.) [illegible]

Borehole Diameter (in.) [illegible]

WELL DESIGN:

Completion Basis: Above Grade at / Below Grade

Geological Log ✓ Geophysical Log

Type

Total Depth of Well (ft.) 43.5

Casing String(s): C=casing S=screen

C - 43.5 - 38 | S - 38 - 33

- 38 - 0 | -

Casing: 2" Schedule 40 PVC 10' section (33-0) 5' section (43.5-38)

Screen: [illegible]

Centralizers None

Gravel/Sand Pack 43.5 to 29 feet

10-20 [illegible] sand

Bentonite Seal(s) 29 to 26 feet

to feet

Bentonite (type) 1/4" Pellets

Backfill (cuttings) to feet

Cement Seal(s) 26 to 0 feet

to feet

Cement Composition [illegible]

Protective Casing 3.0 to 0.0 feet

Protective Casing Type Steel with locking cap

Other

WELL DEVELOPMENT:

Method Hand Pump

Duration 4 hrs Estimated production 0.5 gpm

Water Appearance Clear

Remarks:

WELL/PIEZOMETER COMPLETION DIAGRAM

Project: Prospector Square
TDD No.: F08-3611-34D
Location: Park City, UT
Well Number: PS-MW-3
Geologist: K. Moll
Date(s) of Installation: 7-28/29-87
Depth to Water: 21.97 feet (G.L.)
Elevation from Measuring Point: 6743.25

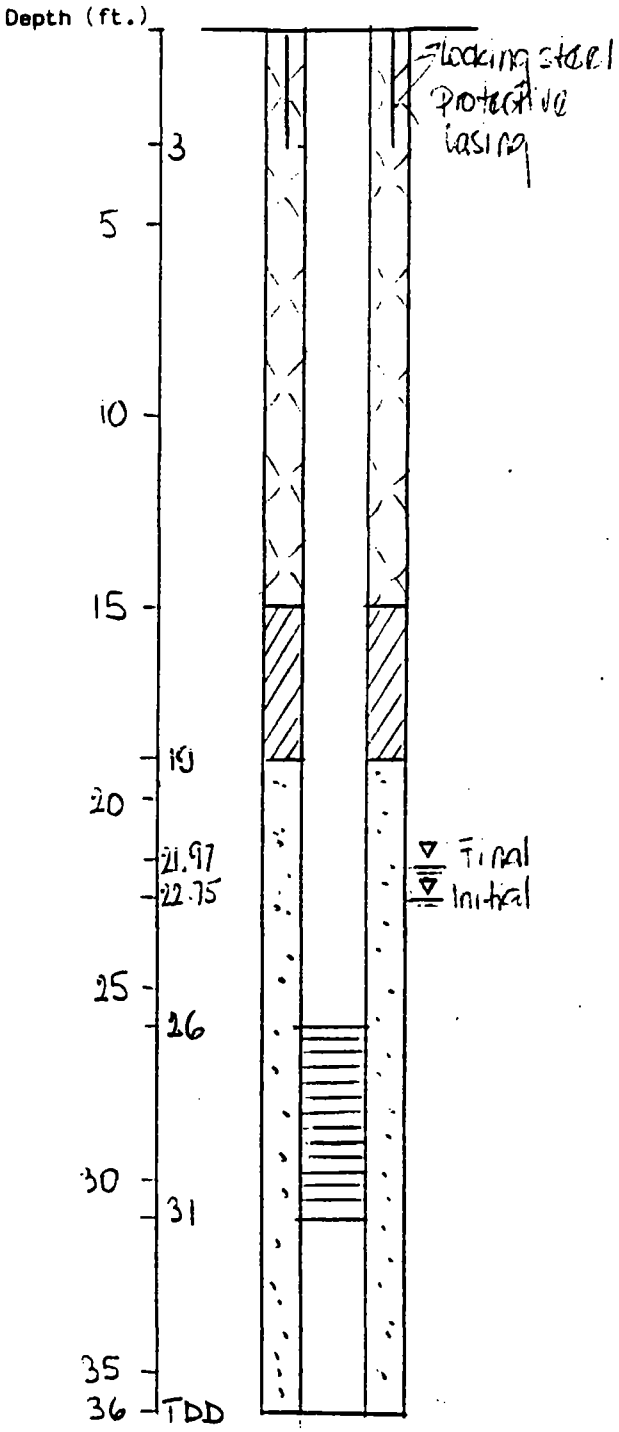

DRILLING SUMMARY:

Driller: S.D.G.G. Alton Schoonmaker
Rig Type: CME 75
Drilling Method: Hollow Stem Auger
Bit(s): Drive cone
Drilling Fluid: 2 gal CMC water
Surface Casing:
Hollow Stem/Drive Casing I.D. (in.): 7 1/4
Total Depth of Boring (ft.): 36.0
Borehole Diameter (in.): 7 1/8

WELL DESIGN:

Completion: Above Grade at ✓ / Below Grade
Basis: Geological Log ✓ / Geophysical Log / Type
Total Depth of Well (ft.): 36.0
Casing String(s): C=casing S=screen
C - 36 - 31 | C - 31 - 26
- 26 - 0 | -
Casing: 2" Schedule 80, PVC 5x10' Sections
Screen: 2" Schedule 80 PVC, 5' Section 0.020 slot
Centralizers: None
Gravel/Sand Pack: 26 to 19 feet
10-20 Flash Silica Sand
Bentonite Seal(s): 19 to 15 feet
to feet
Bentonite (type): 1/4" Pellets
Backfill (cuttings): to feet
Cement Seal(s): to feet
to feet
Cement Composition: 40% Bentonite (Volclay)
96% Portland Type II + water
Protective Casing: 3 to 0 feet
Protective Casing Type: 6" Steel with locking cap
Other:

WELL DEVELOPMENT:

Method: Hand Pump
Duration: 1 hrs Estimated production: 1.25 gpm
Water Appearance: slightly muddy
Remarks:

WELL/PIEZOMETER COMPLETION DIAGRAM

Project Prospector Square

Location Park City UT

Geologist V. Moll

Depth to Water 16.12 feet (G.L.)

TDD No. FOS-8611-34D

Well Number PS-MW-5

Date(s) of Installation 7-20-87; 7-27-87

Elevation from Measuring Point 6741.04

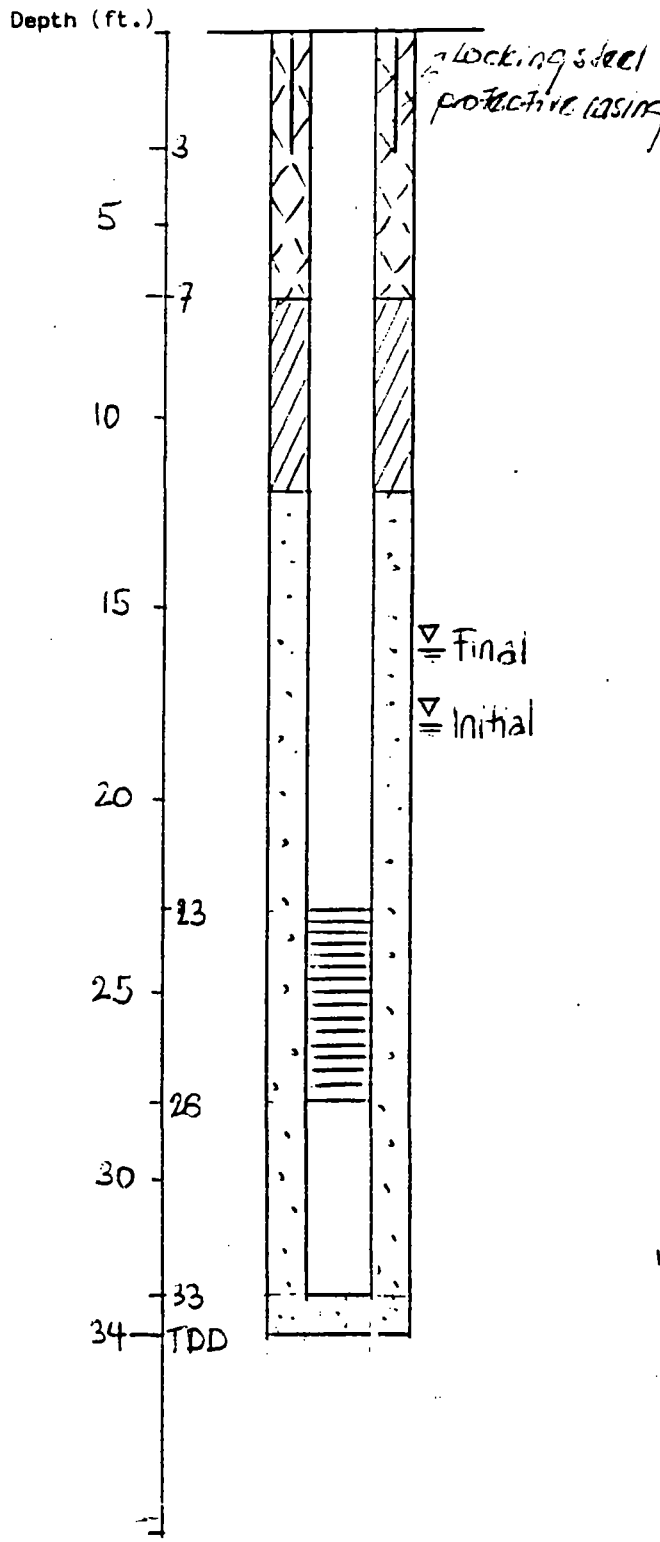

DRILLING SUMMARY:

Driller E.D.A.G. Alton Schoomaker

Rig Type CME 75

Drilling Method Hollow Stem Auger

Bit(s) Tooth type "

Drilling Fluid "

Surface Casing

Hollow Stem/Drive Casing I.D. (in.) 4 ¼"

Total Depth of Boring (ft.) 34.0

Borehole Diameter (in.) 7 5/8

WELL DESIGN:

Completion Basis: Above Grade at Below Grade

Geological Log ✓ Geophysical Log

Type

Total Depth of Well (ft.) 34.0

Casing String(s): C=casing S=screen

C	-33 -28	S	-28 -23
C	-23 -0		-

Casing: 2" Schedule 80 PVC 5x10' Sections

Screen: 2" Schedule 80 PVC .020 Slot 5' Section

Centralizers ✓

Gravel/Sand Pack 33 to 20 feet
10-20 Mesh Sicko Sand

Bentonite Seal(s) 12 to 7 feet
to feet

Bentonite (type) 1/4" Pellets

Backfill (cuttings) 20 to 7 feet

Cement Seal(s) 7 to 0 feet
to feet

Cement Composition 4% Bentonite (Volcano Clay) + Portland Type II slurry

Protective Casing 3.0 to 0 feet

Protective Casing Type 6" Steel with locking top

Other ✓

WELL DEVELOPMENT:

Method Hand pump

Duration 0.7 hrs Estimated production 2 gpm

Water Appearance

Remarks: Well was completed in a perched water table.

WELL/PIEZOMETER COMPLETION DIAGRAM

Project Prospector Square

TDD No. F08-8611-34D

Location Park City, UT

Well Number PS-MW-4

Geologist K. Moll

Date(s) of Installation 7-20/21-87

Depth to Water 27.99 feet (G.L.)

Elevation from Measuring Point 6773.49

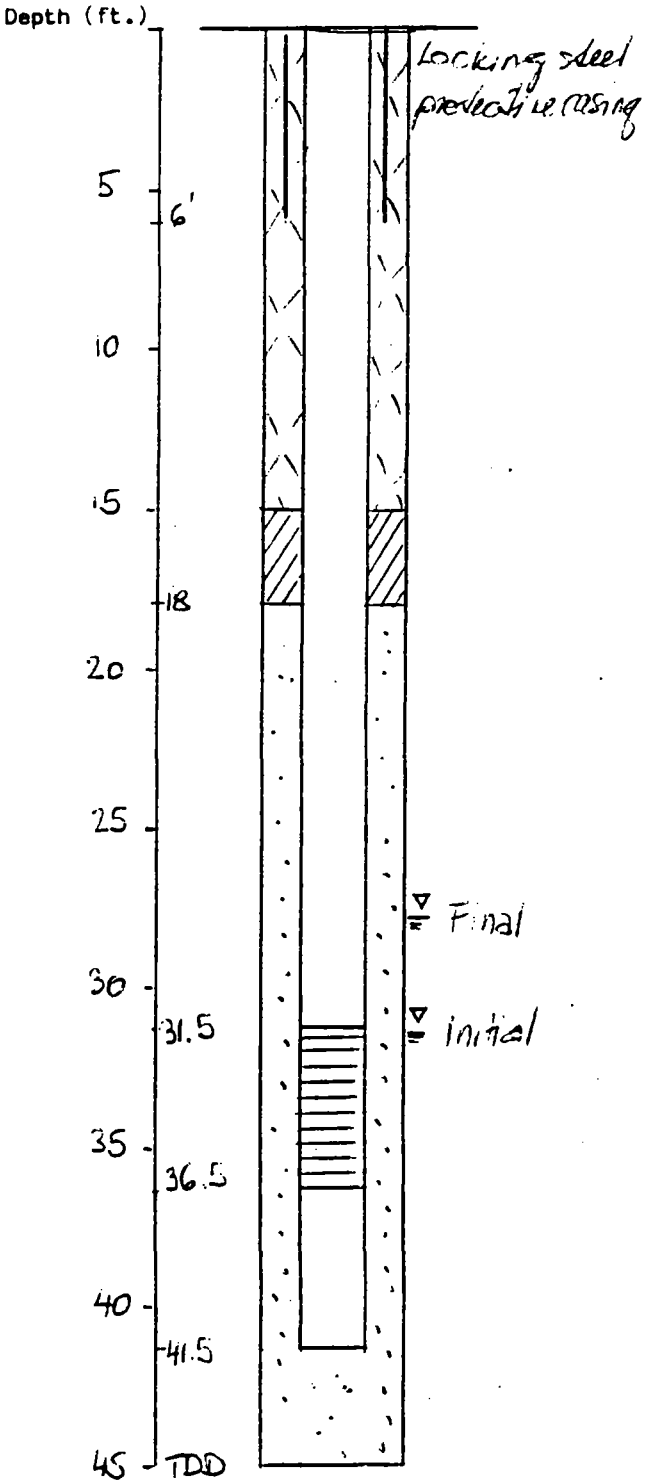

DRILLING SUMMARY:

Driller E.D.A.G. Alton Schoomaker

Rig Type CME 75

Drilling Method Hollow stem auger

Bit(s) Tooth type

Drilling Fluid None

Surface Casing

Hollow Stem/Drive Casing I.D. (in.) 4¼

Total Depth of Boring (ft.) 45.0

Borehole Diameter (in.) 7 5/8

WELL DESIGN:

Completion Basis: Above Grade at / Below Grade

Geological Log ✓ Geophysical Log Type

Total Depth of Well (ft.) 45

Casing String(s): C=casing S=screen

C - 45 - 40 | S - 40 - 35

- 35 - 0 | -

Casing: 2" Schedule 80 PVC 5' & 10' Sections

Screen: 2" Schedule 80, PVC .020 slots

Centralizers None

Gravel/Sand Pack 45 to 18 feet

10-20 Mesh Silica Sand

Bentonite Seal(s) 18 to 15 feet

to feet

Bentonite (type) 1/4" Pellets

Backfill (cuttings) to feet

Cement Seal(s) 15 to 0 feet

to feet

Cement Composition 4% Bentonite + Portland I II Sum

Protective Casing 6' to 0.0' feet

Protective Casing Type 6" Steel with locking cap

Other

WELL DEVELOPMENT:

Method Hand pump + bailer

Duration 0.75 hrs Estimated production 1.5 gpm

Water Appearance

Remarks: ~~Well was filled twice times after completion~~

1) Surge block was used with bailer to clean the well

2) During completion well was stuffed up to 41.5'. Adjust drilling summary data by 3.5 ft.

WELL/PIEZOMETER COMPLETION DIAGRAM

Project Prospector Square

Location Park City, UT

Geologist [illegible] Moll

Depth to Water 13.0 feet (G.L.)

TDD No. F98-8611-34D

Well Number PS-MW-6

Date(s) of Installation 7-20/21-87

Elevation from Measuring Point 6731.48

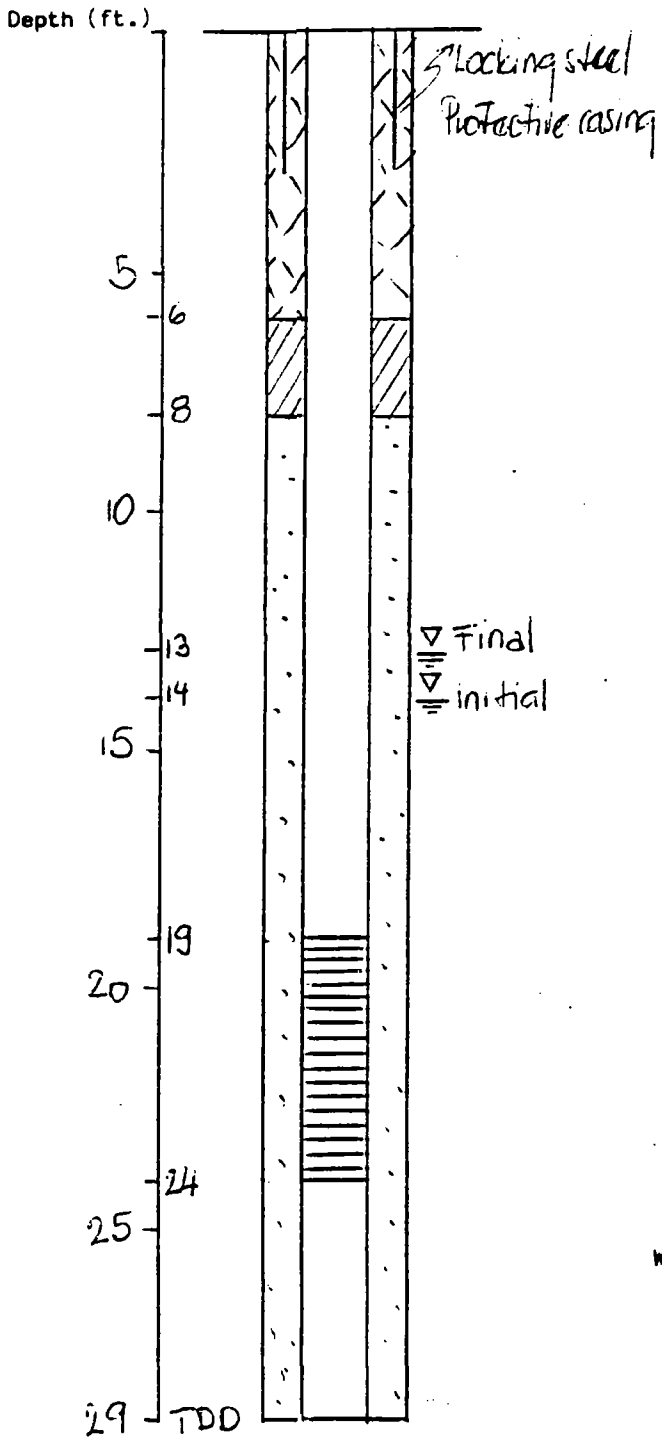

DRILLING SUMMARY:

Driller E.A.D.J. - Alton Schoomaker

Rig Type CME 75

Drilling Method Hollow Stem Auger

Bit(s) 100 ft. type

Drilling Fluid 5 gall distilled water

Surface Casing

Hollow Stem/Drive Casing I.D. (in.) 4 1/4

Total Depth of Boring (ft.) 29'

Borehole Diameter (in.) 7 1/8

WELL DESIGN:

Completion Basis: Above Grade at Below Grade

Geological Log ✓ Geophysical Log

Type

Total Depth of Well (ft.) 29.0

Casing String(s): C=casing S=screen

C - 29 - 24 | S - 24 - 19

- 19 0 | -

Casing: 2" Schedule 80 PVC

Screen: 2" Schedule 80 PVC .020 Slot

Centralizers none

Gravel/Sand Pack 29 to 8 feet

10-20 Mesh Silica Sand

Bentonite Seal(s) 8 to 6 feet

to feet

Bentonite (type) 1/4" Pellets

Backfill (cuttings) to feet

Cement Seal(s) 6 to 0 feet

to feet

Cement Composition Portland Type II cement

Protective Casing 3.0 to 0 feet

Protective Casing Type 6" Steel with long cap

Other

WELL DEVELOPMENT:

Method Hand Pump

Duration 0.9 hrs Estimated production 1 gpm

Water Appearance clear

Remarks: Some backfill cuttings are mixed with sand pack at 14-8' interval

WELL/PIEZOMETER COMPLETION DIAGRAM

Project Prospector Square

TDD No. F08 - 8611 - 34D

Location Park City UT

Well Number PS - MW - 7

Geologist K. Moll

Date(s) of Installation 7-21-87

Depth to Water 10.52 feet (G.L.)

Elevation from Measuring Point 6722.46

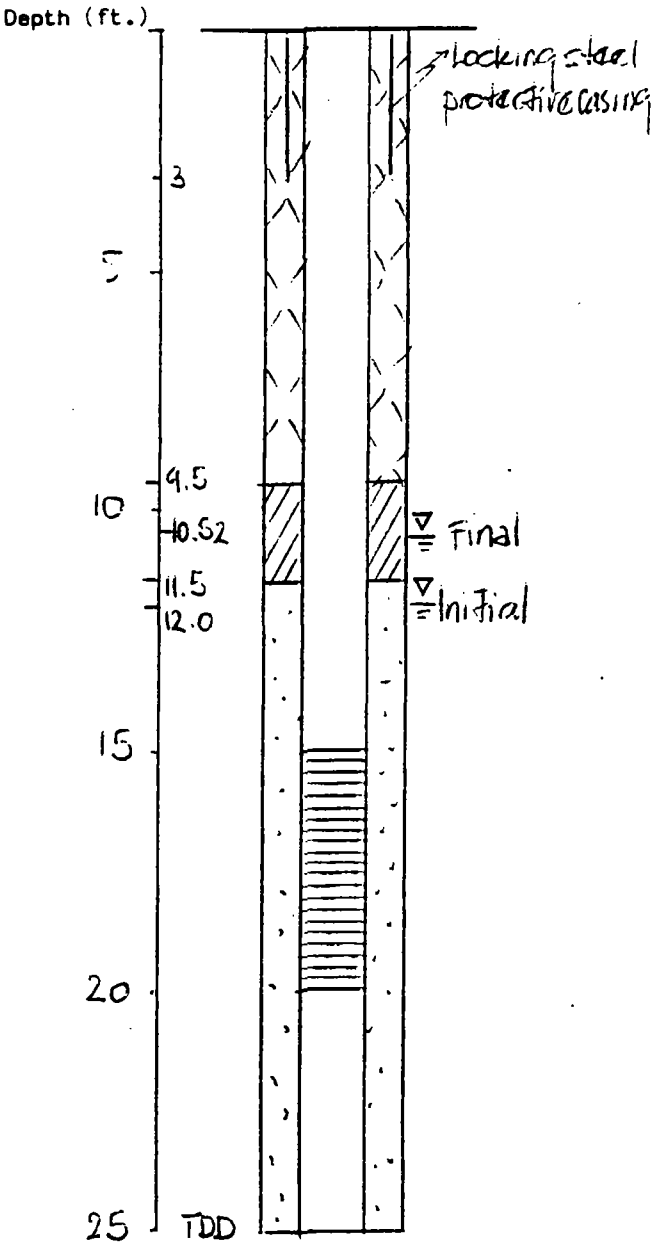

DRILLING SUMMARY:

Driller E.D.A.G. Alton Schoomaker

Rig Type CME 75

Drilling Method Hollow Stem Auger

Bit(s) Tooth type

Drilling Fluid None

Surface Casing 6"

Hollow Stem/Drive Casing I.D. (in.) 7 1/4

Total Depth of Boring (ft.) 25

Borehole Diameter (in.) 7 5/8"

WELL DESIGN:

Completion Basis: Above Grade at Below Grade

Geological Log ✓ Geophysical Log Type

Total Depth of Well (ft.) 25

Casing String(s): C=casing S=screen

C - 25-20 | S - 20-15

C - 15-0 | -

Casing: 2" Schedule 80 PVC 5x10' Sections

Screen: 2" Schedule 80 PVC, .020 slots 5' Section

Centralizers None

Gravel/Sand Pack 25 to 11.5 feet 10-20 Mesh Silica Sand

Bentonite Seal(s) 11.5 to 9.5 feet

to feet

Bentonite (type) 1/4" Pellets

Backfill (cuttings) to feet

Cement Seal(s) 9.5 to grade (0) feet

to feet

Cement Composition 4% Bentonite (Volcclay) and 96% Dry Hand Cement Type II + water

Protective Casing to feet

Protective Casing Type 6" Steel with locking cap

Other

WELL DEVELOPMENT:

Method Hand Pump

Duration 0.75 hrs Estimated production 0.6 gpm

Water Appearance muddy

Remarks:

WELL/PIEZOMETER COMPLETION DIAGRAM

Project Prospector Square

Location Park City, UT

Geologist Mike Peceny

Depth to Water _____ feet (G.L.)

TDD No. F08-8611-34D

Well Number PS-MW-8

Date(s) of Installation 8/4/87

Elevation from Measuring Point 6751.41

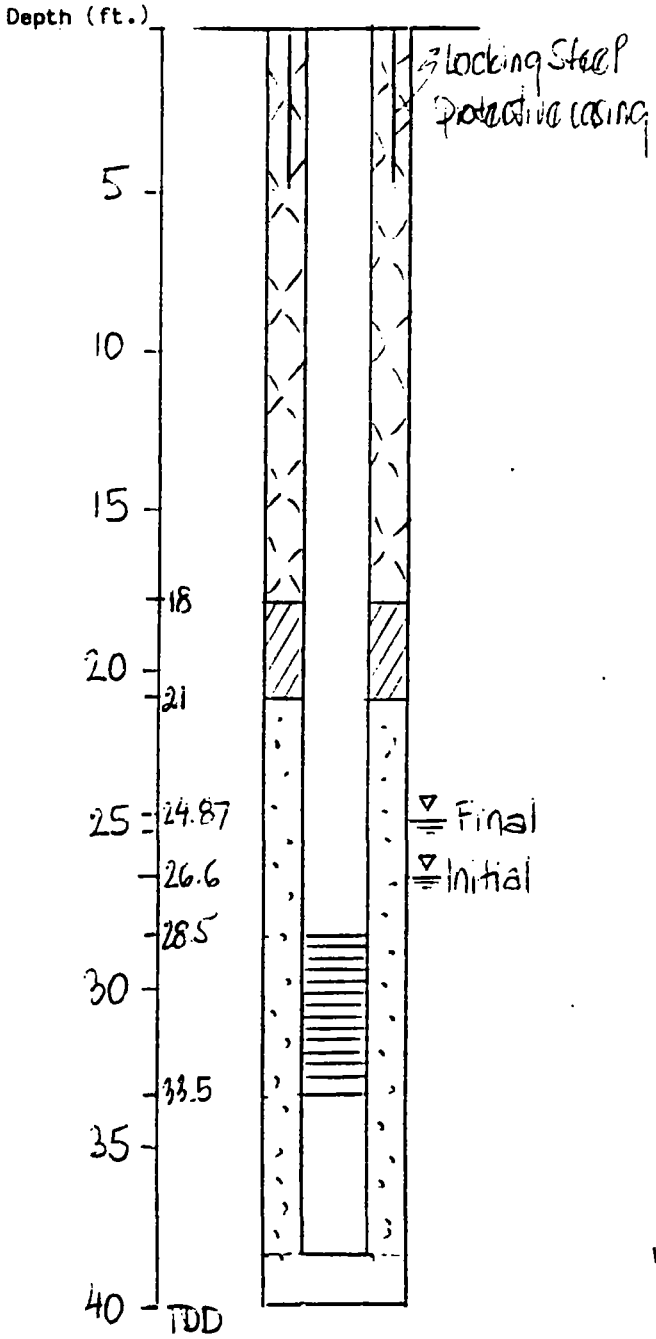

DRILLING SUMMARY:

Driller E.D.A.G. Alton Schoomaker

Rig Type CME 75

Drilling Method Hollow Stem Auger

Bit(s) Tooth type

Drilling Fluid /

Surface Casing

Hollow Stem/Drive Casing I.D. (in.) 4 1/4

Total Depth of Boring (ft.) 40.0

Borehole Diameter (in.) 7 5/8

WELL DESIGN:

Completion Basis: Above at Grade ✓ Below Grade

Geological Log ✓ Geophysical Log _____ Type _____

Total Depth of Well (ft.) 38.5

Casing String(s): C=casing S=screen

C - 38.5 - 33.5 | S - 33.5 - 28.5

- 28.5 - 0 | -

Casing: 2" Schedule 80 PVC, 5 x 10' Sections

Screen: 2" Schedule 80 PVC 0.020 slots

Centralizers None

Gravel/Sand Pack 39 to 21 feet

10-20 Mesh Silica Sand

Bentonite Seal(s) 21 to 18 feet

to _____ feet

Bentonite (type) 1/4 Pellets

Backfill (cuttings) _____ to _____ feet

Cement Seal(s) 18 to 0 feet

to _____ feet

Cement Composition 5% Bentonite + Portland Type II slurry

Protective Casing 5 to 0 feet

Protective Casing Type 6" Steel with locking cap

Other _____

WELL DEVELOPMENT:

Method _____

Duration _____ hrs Estimated production _____ gpm

Water Appearance _____

Remarks: Original hole MW-8 was redrill at the same location because wrong completion (unscrewed PVC casing by HSA)

WELL/PIEZOMETER COMPLETION DIAGRAM

Project [illegible]

Location [illegible]

Geologist [illegible]

Depth to Water 6.0 feet (G.L.)

TDD No. [illegible]

Well Number [illegible]

Date(s) of Installation [illegible]

Elevation from Measuring Point [illegible]

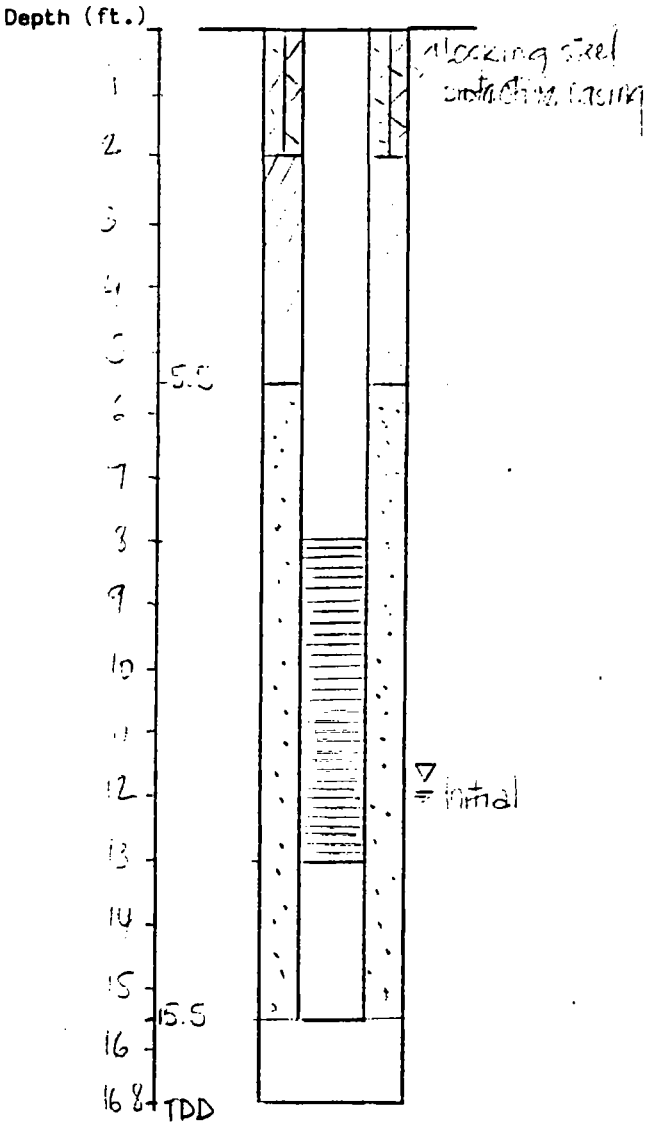

DRILLING SUMMARY:

Driller [illegible]

Rig Type [illegible]

Drilling Method [illegible]

Bit(s) [illegible]

Drilling Fluid [illegible]

Surface Casing

Hollow Stem/Drive Casing I.D. (in.) [illegible]

Total Depth of Boring (ft.) [illegible]

Borehole Diameter (in.) [illegible]

WELL DESIGN:

Completion Basis: Above Grade [illegible] Below Grade

Geological Log ✓ Geophysical Log

Type

Total Depth of Well (ft.) 15.5

Casing String(s): C=casing S=screen

C - 15 - 13 | S - 13 - 8

- 8 - 0 | -

Casing: 2" Schedule 80 PVC, 10' sections

Screen: 2" Schedule 80 PVC, [illegible] slots, 5' [illegible]

Centralizers none

Gravel/Sand Pack 15.5 to 5.5 feet

10-20 Mesh [illegible] sand

Bentonite Seal(s) 5.5 to 2.0 feet

to feet

Bentonite (type) [illegible] sent [illegible]

Backfill (cuttings) to feet

Cement Seal(s) 2.0 to 0.0 feet

to feet

Cement Composition

Portland Type [illegible]

Protective Casing 2.0 to 0.0 feet

Protective Casing Type

Steel with locking cap

Other

WELL DEVELOPMENT:

Method Hand Pump & Bailer

Duration 1.5 hrs Estimated production 1.2 gpm

Water Appearance slightly muddy

Remarks:

Bedrock at 15.0' Woodside Shale

WELL/PIEZOMETER COMPLETION DIAGRAM

Project: Prospector Square
TDD No.: F08 - 3611 - 34D
Location: Park City, UT
Well Number: PS - MW - 10
Geologist: M. Feeney
Date(s) of Installation: 7-31-87
Depth to Water: 1.24 feet (G.L.)
Elevation from Measuring Point:

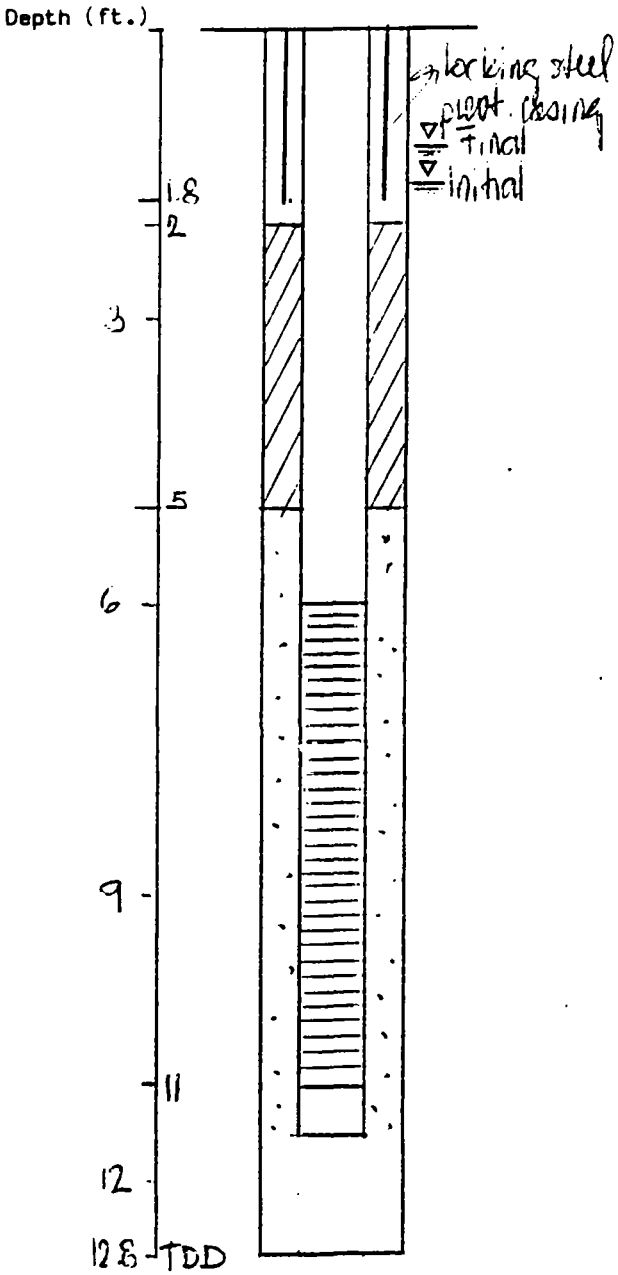

DRILLING SUMMARY:

Driller: E.D.A.G. Alton Schoomaker
Rig Type: CME 75
Drilling Method: Hollow Stem Auger
Bit(s): Tooth type
Drilling Fluid:

Surface Casing:
Hollow Stem/Drive Casing I.D. (in.): 4¼
Total Depth of Boring (ft.): 12.8'
Borehole Diameter (in.): 7 7/8

WELL DESIGN:

Completion: Above Grade at / Below Grade
Basis: Geological Log ✓ Geophysical Log ___ Type ___
Total Depth of Well (ft.): 11.5
Casing String(s): C=casing S=screen

C	S
11.5 - 11.0	11.0 - 6.0
6.0 - 0	

Casing: 2" Schedule 80, PVC
Screen: 2" Schedule 80 PVC 0.020 slot
Centralizers: none
Gravel/Sand Pack: 11.5 to 5.0 feet
10-20 Mesh Silica Sand
Bentonite Seal(s): 5.0 to 2.0 feet
to ___ feet
Bentonite (type): 1/4 Pellets
Backfill (cuttings): to ___ feet
Cement Seal(s): 2.0 to 0 feet
to ___ feet
Cement Composition: Minimix + Portland type II cement + water
Protective Casing: 18" to 0 feet
Protective Casing Type: 6" Steel with locking cap
Other:

WELL DEVELOPMENT:

Method:
Duration: 1 hrs Estimated production: 0.8 gpm
Water Appearance: muddy
Remarks:

WELL/PIEZOMETER COMPLETION DIAGRAM

Project: Prospector Square
Location: Park City UT
Geologist: M. Pecany
Depth to Water: 1.85 feet (G.L.)

TDD No.: F08-2611-34D
Well Number: DS-MW-11
Date(s) of Installation: 8-13-87
Elevation from Measuring Point:

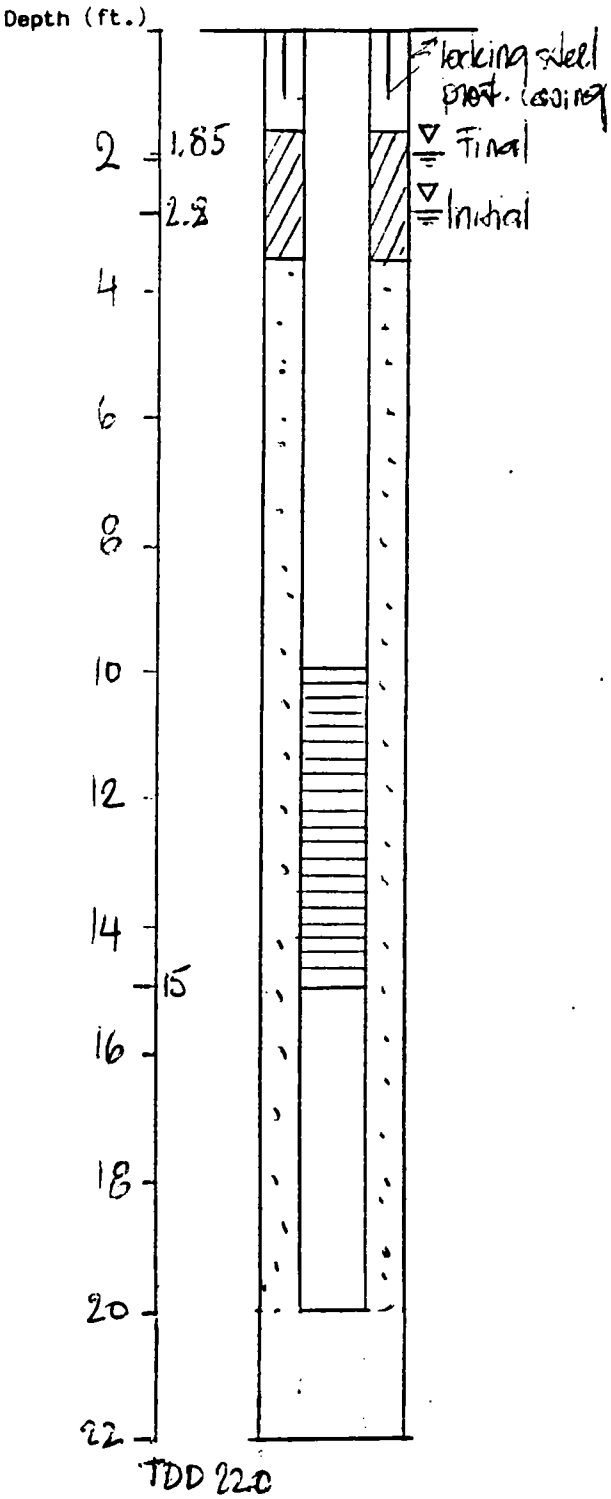

DRILLING SUMMARY:

Driller: E.D.A.G. Alton Schoomaker
Rig Type: CME 75
Drilling Method: HSA
Bit(s): Tooth type
Drilling Fluid: none
Surface Casing:
Hollow Stem/Drive Casing I.D. (in.): 4 1/4
Total Depth of Boring (ft.): 22.0
Borehole Diameter (in.): 7 5/8

WELL DESIGN:

Completion Basis: Above Grade at ✓ Below Grade
Geological Log ✓ Geophysical Log
Type
Total Depth of Well (ft.): 20.0
Casing String(s): C=casing S=screen
C - 20-15 | S - 15-10
- 10-0 | -

Casing: 2" Schedule 80 PVC
Screen: 2" Schedule 80 PVC 0.020 slot
Centralizers: none
Gravel/Sand Pack: 20 to 3.5 feet
10-20 Mesh Silica Sand
Bentonite Seal(s): 3.5 to 1.5 feet
to feet
Bentonite (type): 1/4" Pellets
Backfill (cuttings): to feet
Cement Seal(s): 1.5 to 0 feet
to feet
Cement Composition: Portland type II cement
Protective Casing: 1.0 to 0 feet
Protective Casing Type: 6" Steel with locking cap
Other:

WELL DEVELOPMENT:

Method: Hand pump
Duration: 50 min hrs Estimated production: 1.2 gpm
Water Appearance: slightly muddy
Remarks: