RUIDOSO-RUIDOSO DOWNS REGIONAL WWTP
JOINT USE BOARD

PHASE 1A – SLUDGE HANDLING AND ULTRAVIOLET DISINFECTION FACILITIES – 2008

CHANGE ORDER NO. 04

October 20, 2009

2701 Miles Rd. SE
Albuquerque, NM 87111
505-242-5700
Fax 242-0673

MOLZEN-CORBIN & Associates

RUI062-11.D40

CHANGE ORDER

(Instructions on reverse side) No. 04

PROJECT: Ruidoso-Ruidoso Downs Regional WWTP – Joint Use Board Phase 1A Sludge Handling and Ultraviolet Disinfection Facilities - 2008

DATE OF ISSUANCE: October 20, 2009 EFFECTIVE DATE: Date Approved by NMED

OWNER: Village of Ruidoso, Acting Fiscal Agent for the Ruidoso/Ruidoso Joint Use Board (JUB)

OWNER'S CONTRACT NO.: 08-001

CONTRACTOR: Tatsch Construction, Inc. ENGINEER: Molzen-Corbin & Associates

You are directed to make the following changes in the Contract Documents.

Description: Change Order includes Contractor's Change Proposal Nos. 22, 23, 24, 25, 26, 27, 28, and 29, as listed in Exhibit 1. Summary of Change Order No. 4 is included in Exhibit 1.

Reason for Change Order: The reason for each change is included with each Change Proposal. Refer to the attachments in Exhibit 2, Exhibit 3, Exhibit 4, Exhibit 5, Exhibit 6, Exhibit 7, Exhibit 8, and Exhibit 9.

Attachments (list documents supporting change): Reference Exhibits 1, 2, 3, 4, 5, 6, 7, 8, and 9.

CHANGE IN CONTRACT PRICE:	CHANGE IN CONTRACT TIMES:
Original Contract Price: $ 6,794,274.00	Original Contract Times: Substantial Completion: June 13, 2009 Ready for Final Payment: July 3, 2009 (days or dates)
Net changes from previous Change Orders No. 01 to No. 03 $ 65,044.13	Net change from previous Change Orders No. 01 to No. 03 9 (days)
Contract Price prior to this Change Order: $ 6,859,318.13	Contract Times Prior to this Change Order: Substantial Completion: June 22, 2009 Ready for Final Payment: July 12, 2009 (days or dates)
Net increase (~~decrease~~) of this Change Order: $ 48,727.42	Net increase (~~decrease~~) of this Change Order: 63 (days)
Contract Price with all approved Change Orders: $ 6,908,045.55	Contract Times with all approved Change Orders: Substantial Completion: August 24, 2009 Ready for Final Payment: September 13, 2009 (days or dates)

RECOMMENDED:
MOLZEN-CORBIN & ASSOCIATES
By: _____
Engineer (Authorized Signature)
Date: 10/20/09

APPROVED:
VILLAGE OF RUIDOSO
By: _____
Owner-Agent (Authorized Signature)
Date: 10/30/09.

ACCEPTED:
TATSCH CONSTRUCTION, INC.
By: Richard A. Rogers
Contractor (Authorized Signature)
Date: 22 Oct. 2009

APPROVED:
CITY OF RUIDOSO DOWNS
By: _____
Owner-Agent (Authorized Signature)
Date: 10/30/09

APPROVED:
NEW MEXICO ENVIRONMENT DEPT.
By: _____
Walter (Sandy) Edens, P.E., Project Manager
Date: 11/5/09

OCT 22 2009

Prepared by the Engineers Joint Contract Documents Committee and endorsed by The Associated General Contractors of America

EXHIBIT 1

SUMMARY OF CHANGE ORDER NO. 4

RUIDOSO-RUIDOSO DOWNS REGIONAL WWTP
PHASE 1A SLUDGE HANDLING AND ULTRAVIOLET DISINFECTION FACILITIES 2008
CHANGE ORDER NO. 4

Item/Description	Amount (w/o Tax)	Additional Contract Time, days	Refer to Exhibit
CHANGES TO SCOPE OF WORK			
CP No. 22 - Sludge Storage Area Paving	$ 17,980.62	7	2
CP No. 23 - UV Structure Sidewalk	$ 1,278.56	2	3
CP No. 24 - Replace Existing Washwater Line at Sludge Beds	$ 11,942.12	7	4
CP No. 25 - 4" Plug Valve on GBT Inlet Line	$ 1,447.73	3	5
CP No. 26 - Digester Cover Plates over Slide Gate Opening	$ 1,114.97	1	6
CP No. 27 - Relocate One Propane Tank	$ 9,188.67	28	7
CP No. 28 - Move Washwater Piping at GBT and BFP	$ 1,551.21	3	8
CP No. 29 - Add Spray System to GBT Hopper	$ 4,223.54	12	9
Total Changes	$ 48,727.42	63	

NET CHANGE TO CONTRACT PRICE	
Original Contract Price (without NMGRT)	$ 6,794,274.00
Change Order No. 1 Amount	$ (22,505.16)
Change Order No. 1 Contract Price	$ 6,771,768.84
Change Order No. 2 Amount	$ 72,853.88
Change Order No. 2 Contract Price	$ 6,844,622.72
Change Order No. 3 Amount	$ 14,695.41
Change Order No. 3 Contract Price	$ 6,859,318.13
Change Order No. 4 Amount	$ 48,727.42
Change Order No. 4 Contract Price	$ 6,908,045.55

ORIGINAL CONTRACT TIME	
Original Substantial Completion	June 13, 2009
Original Ready for Final Payment	July 3, 2009
CHANGE ORDER NO. 1 CONTRACT TIME	
Change Order No. 1 Time Increase (calendar days)	7
Revised Substantial Completion	June 20, 2009
Revised Ready for Final Payment	July 10, 2009
CHANGE ORDER NO. 2 CONTRACT TIME	
Change Order No. 2 Time Increase (calendar days)	0
Revised Substantial Completion	June 20, 2009
Revised Ready for Final Payment	July 10, 2009
CHANGE ORDER NO. 3 CONTRACT TIME	
Change Order No. 3 Time Increase (calendar days)	2
Revised Substantial Completion	June 22, 2009
Revised Ready for Final Payment	July 12, 2009
CHANGE ORDER NO. 4 CONTRACT TIME	
Change Order No. 4 Time Increase (calendar days)	63
Revised Substantial Completion	August 24, 2009
Revised Ready for Final Payment	September 13, 2009

EXHIBIT 2

CHANGE PROPOSAL NO. 22

INCLUDES:

1) **Notice to Proceed Based on Pre-Approvals Received From Owner and NMED with Contractor's Change Proposal No. 22**

2) **NMED Pre-Approval Dated July 24, 2009**

3) **Village of Ruidoso Pre-Approval Dated July 21, 2009**

4) **Ruidoso Downs Pre-Approval Dated July 20, 2009**

Angel Campos

To: richard.a.rogers@tatschconstruciton.com
Cc: molzencorbin@windstream.net; Del Archuleta; RandallCamp@ruidoso-nm.gov; cordpwd@zianet.com; williammorris@ruidoso-nm.gov; Sandy.Edens@state.nm.us; BobbySnowden@ruidoso-nm.gov; LisaSanchez@ruidoso-nm.gov
Subject: Ruidoso Phase 1A - Change Proposal 22 - Notice to Proceed
Attachments: AR-M455N_20090720_072644.pdf; AR-M455N_20090720_072700.pdf

July 27, 2009

RE: Change Proposal 22 - Relocate Sludge Storage Area Drop Inlet, Regrade and Pave Portion of Sludge Storage Area
Notice to Proceed

This is to inform Tatsch Construction that the Village of Ruidoso, City of Ruidoso Downs, and the New Mexico Environment Department have pre-approved Change Proposal No. 22 summarized in the Contractor's proposal dated July 17, 2009. By receipt of these pre-approvals, Tatsch Construction is authorized to proceed with this change proposal for the amount of $17,980.62. This additional work includes a time extension of seven (7) calendar days. This change proposal will be added to the Contract by the Change Order provisions of the Contract Documents and will be included in the next formal Change Order to the Contract.

Please call me, should you have any questions regarding this communication.

Sincerely,

Angel Campos
Molzen-Corbin

-----Original Message-----
From: EdensJr, Walter, NMENV [mailto:Sandy.Edens@state.nm.us]
Sent: Friday, July 24, 2009 2:40 PM
To: Angel Campos
Subject: RE: Ruidoso Phase 1A - Engineer's Review and Request for Preapproval of CP#22

I concur.

Sandy Edens, P.E.
Project Manager
New Mexico Environment Department, CPB
5500 San Antonio NE
Albuquerque, NM 87109
505-222-9512

-----Original Message-----
From: Angel Campos [mailto:acampos@molzencorbin.com]
Sent: Monday, July 20, 2009 8:17 AM
To: RandallCamp@ruidoso-nm.gov; cordpwd@zianet.com; LisaSanchez@ruidoso-nm.gov; williammorris@ruidoso-nm.gov; EdensJr, Walter, NMENV; BobbySnowden@ruidoso-nm.gov
Cc: Archuleta, Del; molzencorbin@windstream.net; John Tellez

Subject: Ruidoso Phase 1A - Engineer's Review and Request for Preapproval of CP#22

July 20, 2009

TO: Randall Camp, Village of Ruidoso
Bill Morris, Village of Ruidoso
Cleatus Richards, City of Ruidoso Downs
Sandy Edens, New Mexico Environment Department

RE: Engineer's Review of Change Proposal No. 22
Relocate Sludge Storage Area Drop Inlet, Regrade and Pave Portion of Sludge Storage Area

A. SCOPE AND JUSTIFICATION: The sludge storage area surface runoff drop inlet was removed by the Contractor. Afterwards, Bobby Snowden, Plant Operator identified the need for retaining the drop inlet to capture and return surface runoff from the sludge storage area to the head of the treatment plant. The previous drop inlet location was changed to fit the new drainage and grading plan. In addition, the west portion of the sludge drainage area required to be regraded to capture surface runoff in the new drop let. The area of the western portion is approximately 353 square yards. The Contractor's price proposal is based on the Engineer's grading plan of July 15, 2009 (copy attached).
The revised grading plan is to accommodate the new location of the sludge storage area drop inlet.

B. ENGINEER'S COMMENTS: The Contractor's price proposal itemizes all labor, materials, equipment required to complete the work. Asphalt removal costs equate to approximately $13 per cubic yard. The price proposal from the asphalt paving subcontractor at $10,320 equates to approximately $29 per cubic yard. The Contractor's price proposal is for a total amount of $17,980.62. The price proposal includes the allowable Contractor markups. We find the price proposal reasonable for the scope of work. A time extension of seven (7) calendar days is requested by the Contractor.

C. SUMMARY - REQUEST FOR APPROVAL BY OWNER AND NEW MEXICO ENVIRONMENT DEPARTMENT: The Engineer is requesting pre-approval of this additional work from the Owner and NMED. The Contractor requested an immediate reply to this price proposal in order to prevent a second mobilization charge by the paving subcontractor. Please acknowledge pre-approval by replying to this request. This additional work in the amount of $17,980.62 will be added by Change Order to the Contract Documents after receipt of NMED approval. Seven (7) calendar days will be added to the Contract Time.

Please call me if you have any questions regarding this communication.

Angel Campos
Molzen-Corbin & Associates
acampos@molzencorbin.com
(505) 242-5700

This inbound email has been scanned by the MessageLabs Email Security System.

Confidentiality Notice: This e-mail, including all attachments is for the sole use of the intended recipient(s) and may contain confidential and privileged information. Any

unauthorized review, use, disclosure or distribution is prohibited unless specifically provided under the New Mexico Inspection of Public Records Act. If you are not the intended recipient, please contact the sender and destroy all copies of this message. -- This email has been scanned by the Sybari - Antigen Email System.

Confidentiality Notice: This e-mail,including all attachments is for the sole use of the intended recipient(s) and may contain confidential and privileged information. Any unauthorized review,use,disclosure or distribution is prohibited unless specifically provided under the New Mexico Inspection of Public Records Act. If you are not the intended recipient, please contact the sender and destroy all copies of this message. -- This email has been scanned by the MessageLabs Email Security System.

KEYED NOTES

1. STA. 14+60, CL
   INSTALL SD INLET
   TOG=6158.14
   INV=TIE TO EXISTING
   DRAIN LINE

2. SAWCUT, REMOVE,
   DISPOSE & REPLACE
   EXISTING ASPHALT.
   MATCH EXISTING

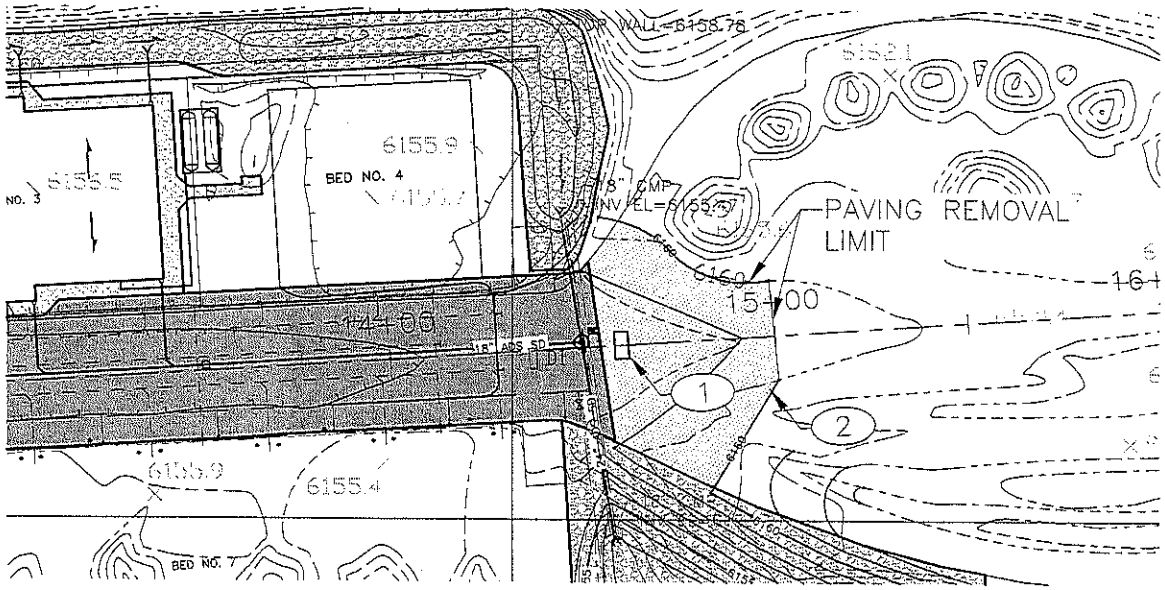

N

SCALE:
1"=50' HORIZ

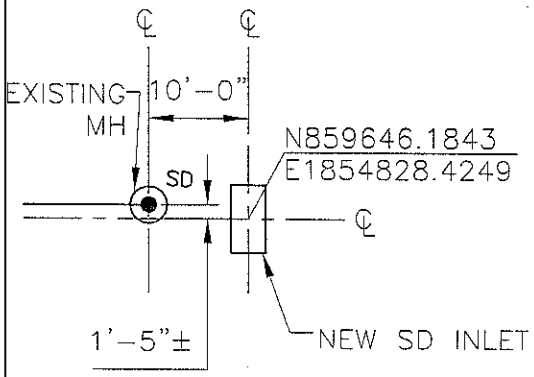

SD INLET LOCATION

N.T.S.

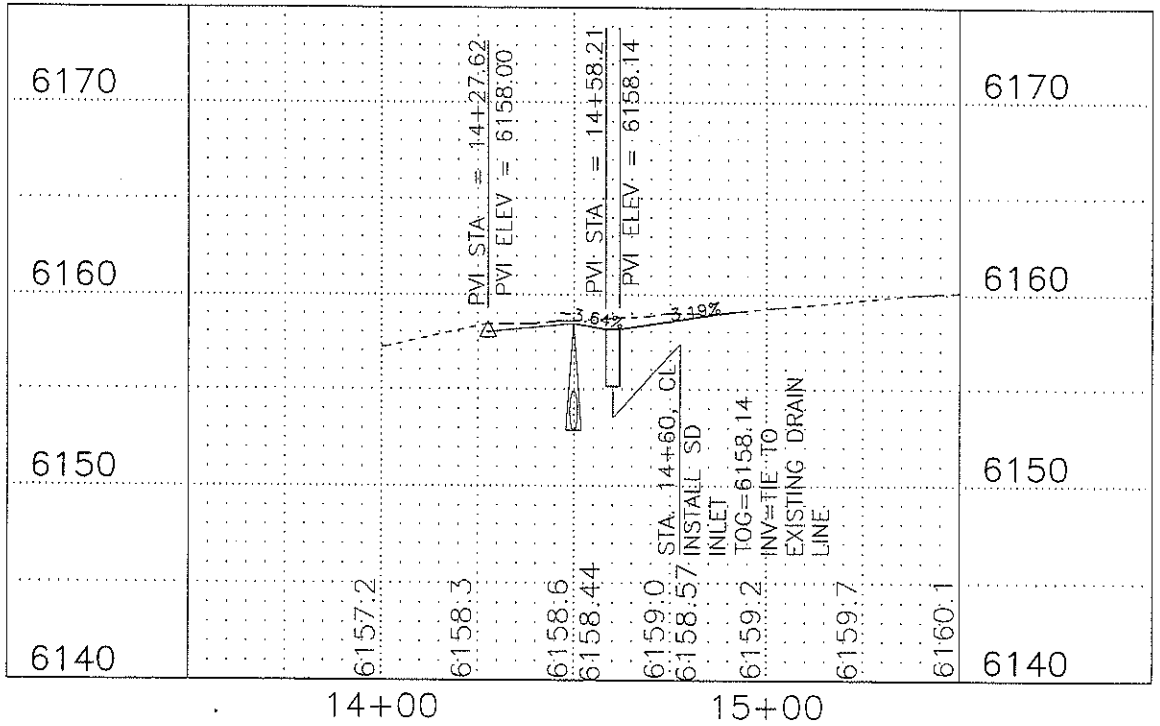

SCALE:
1"=50' HORIZ
1"=10' VERT

2701 MILES RD SE
ALBUQUERQUE, NM 87106
TEL: 505.242-5700 FAX: 505.242-0673
MOLZEN-CORBIN & Associates
ENGINEERS/ARCHITECTS/PLANNERS

RUIDOSO - RUIDOSO DOWNS REGIONAL WWTP JOINT USE BOARD

PAVED AREA REVISIONS TO ACCOMMODATE SLUDGE STORAGE AREA DROP INLET (7-15-09)

Angel Campos

From: Richard A.Rogers [richard.a.rogers@tatschconstruction.com]
Sent: Friday, July 17, 2009 3:57 PM
To: Angel Campos
Subject: Ruidoso 1A - Change Proposal #22 - Relocate SD Inlet
Attachments: CP#22 - Relocate SD Inlet.pdf

Attached is our Change Proposal.

The short acceptance time is based upon our current schedule for performing the paving work and the assumption that this work will be done without a second mobilization by our subcontractor.

Richard A. Rogers, Vice President
Tatsch Construction, Inc.
208 Highway 180 West
Silver City, NM 88061
www.TatschConstruction.com
Phone: 575-538-3704 ext.13
Fax: 575-538-2552

Tatsch Construction, Inc.

GENERAL CONTRACTORS
Licenses: NM 15206, AZ 074121 & 074122

208 Highway 180 West
Silver City, NM 88061
Phone: 575-538-3704 Fax: 575-538-2552
www.tatschconstruction.com

17-July-2009

To: Angel Campos
Molzen-Corbin & Associates
2701 Miles Road, S.E.
Albuquerque, NM 87106

Re: **Change Proposal No. 22**
Phase 1A - Sludge Handling and Ultraviolet Disinfection Facilities

RFP: **15-Jul-09**

Description: **Relocate Sludge Storage Area Drop Inlet, regrade & pave portion of sludge storage area as per drawing dated 15 July 2009.**

Excludes:

General Work:	Tatsch Construction Inc.			5,817.00	
	Bond Premium	17.981 M	$6.00	107.89	
	Subcontract Bond Premium	10.320 M	$25.00	258.00	
	Builders Risk Insurance	179.806 C	$0.0873	15.70	
	Owner-Contractor Protective Insurance	17.981 M	$0.7850	14.12	
			Subtotal	6,212.71	
		Fee		931.91	
			Subtotal		7,144.62
Subcontracts:	Constructors, Inc.			10,320.00	
			Subtotal	10,320.00	
		Fee on Subcontracts		516.00	
			Subtotal		10,836.00
			Total This Change Proposal		**$17,980.62**

Additional contract time in the amount of seven **(7) calendar days** will be required for this work.
This proposal is offered **for written acceptance by the Owner no later than 23 July 2009** and is thereafter **withdrawn.**

Submitted by: Richard A. Rogers, Vice President

Estimate Details Report

Ruidoso 1A - Change Order

Item	Description	Location	Takeoff Qty			W%	Conversion		Order Qty		Unit Price	Amount
CP#22												
* unassigned *												
2002.51	*Asphalt Concrete Removal*											
care	Minor Asphalt Concrete Removal		353.28	SqYd	Lab		12.50000	SqYd/mh	28.26	mh	51.002	1,441
					Eqp		15.00000	SqYd/hr	23.55	hr	94.00	2,214
dfee	Asphalt Disposal Fee		29.44	CuYd	Oth		2.00000	Ton/CuYd	58.88	Ton	7.50	442
disp	Disposal of Asphalt Paving (14cy dump)		29.44	CuYd	Lab	99	14.00000	CuYd/mh	4.18	mh	25.05	105
					Eqp	99	14.00000	CuYd/hr	4.18	hr	45.50	190
saw	Saw Asphalt Pavements		125.971	LnFt	Lab		31.25000	LnFt/mh	4.03	mh	24.59	99
					Eqp		37.50000	LnFt/hr	3.36	hr	10.563	35
					Oth		1,500.00000	LnFt/Blad	0.08	Blad	500.00	42
	Asphalt Concrete Removal											*4,569*
	36.48 Labor hours											
	31.10 Equipment hours											
2210.00	*Mass Excavation*											
l515	2-1/8cy Int 515 Loader (exc.)		29.44	CuYd	Lab		10.00000	CuYd/mh	2.94	mh	51.002	150
					Eqp		12.00000	CuYd/hr	2.45	hr	94.00	231
	Mass Excavation											*381*
	2.944 Labor hours											
	2.453 Equipment hours											
2229.00	*Disposal of Mass Excav.*											
dt14	14cy 10whl Dump (disposal)		29.44	CuYd	Lab		23.33333	CuYd/mh	1.26	mh	25.05	32
					Eqp		28.00000	CuYd/hr	1.05	hr	45.50	48
	Disposal of Mass Excav.											*79*
	1.262 Labor hours											
	1.051 Equipment hours											
2240.00	*Structural Excavat'n*											
bkho	3/8cy Backhoe Struct. Excav.		17.511	CuYd	Lab		17.50000	CuYd/mh	1.00	mh	60.08	60
					Eqp		21.00000	CuYd/hr	0.83	hr	55.50	46
	Structural Excavat'n											*106*
	1.001 Labor hours											
	0.834 Equipment hours											
2241.00	*Structural Backfill*											
l515	2cy Loader		17.511	cuyd	Lab		23.33333	cuyd/mh	0.75	mh	51.002	38
					Eqp		28.00000	cuyd/hr	0.63	hr	94.00	59
wt	Water Truck		17.511	cuyd	Lab		60.00000	cuyd/mh	0.29	mh	25.05	7
					Mat		20.00000	cuyd/MGal	0.88	MGal	2.50	2
					Eqp		72.00000	cuyd/hr	0.24	hr	43.88	11
	Structural Backfill											*117*
	1.042 Labor hours											
	0.87 Equipment hours											
2243.00	*Struct. Backfill Material*											
rtrv	Retrieve Stockpile Material		17.511	cuyd	Lab		46.66670	cuyd/mh	0.38	mh	31.54	12
					Eqp		56.00000	cuyd/hr	0.31	hr	57.63	18

Item	Description	Location	Takeoff Qty			W%	Conversion		Order Qty		Unit Price	Amount
	Struct. Backfill Material											
	0.38 Labor hours											30
	0.313 Equipment hours											
2244.00	*Dispose of Struct. Excav.*											
	1000 Excess Struct. Mat'l Disposal		17,511	CuYd	Lab	0	23.33333	CuYd/mh	0.75	mh	25.05	19
					Eqp	0	28.00000	CuYd/hr	0.63	hr	45.50	28
	Dispose of Struct. Excav.											47
	0.750 Labor hours											
	0.63 Equipment hours											
2750.00	*Excavate Utility Trenches*											
bh	1/4cy Backhoe		9.722	CuYd	Lab		10.00000	CuYd/mh	0.97	mh	47.69	47
					Eqp		18.00000	CuYd/hr	0.54	hr	55.50	30
	Excavate Utility Trenches											77
	0.972 Labor hours											
	0.540 Equipment hours											
2751.00	*Backfill Utility Trenches*											
dp	Diesel Plate Compactor		8.89	CuYd	Lab		4.00000	CuYd/mh	2.22	mh	24.59	55
					Eqp		4.72225	CuYd/hr	1.88	hr	17.83	34
hand	Hand Bedding		0.833	CuYd	Lab		1.25000	mh/CuYd	1.04	mh	23.504	24
					Eqp		0.83750	hr/CuYd	0.70	hr	13.15	9
l515	2cy Loader		8.89	CuYd	Lab		35.00000	CuYd/mh	0.25	mh	51.002	13
					Eqp		42.00000	CuYd/hr	0.21	hr	62.500	13
wt	Water Truck		8.89	CuYd	Lab		58.33333	CuYd/mh	0.15	mh	25.05	4
					Eqp		70.00000	CuYd/hr	0.13	hr	40.63	5
	Backfill Utility Trenches											157
	3.67 Labor hours											
	2.92 Equipment hours											
15061.06	*6" I.P.S. PVC Pipe*											
	0280 6" Sch.40 PVC Pipe		20.00	LnFt	Mat	0			20.00	LnFt	2.87	57
lnft	6" PVC Pipe Installation		20.00	lnft	Lab		4.21941	lnft/mh	4.74	mh	35.69	169
					Eqp		50.00000	lnft/hr	0.40	hr	66.463	27
	6" I.P.S. PVC Pipe											253
	4.74 Labor hours											
	0.40 Equipment hours											
15190.00	*Mechanical Identification*											
tape	Magnetic Marker Tape		20.00	LnFt	Oth	5	1,000.00000	LnFt/Roll	0.02	Roll	47.82	1
	Mechanical Identification											1
	* unassigned *											
	53.234 Labor hours											5,817
	41.10 Equipment hours											
	CP#22											
	53.234 Labor hours											*5,817*
	41.10 Equipment hours											

Partial Totals

Description	Amount	Cuts/Adds	Net Amount	Totals	Hours	Rate	C Cost per Unit	rcent of Total
Labor	2,275		2,275		53.234 hrs			39.10%
Material	60		60					1.02%
Subcontract								

Partial Totals

Equipment	2,998	2,998		41.100 hrs	51.53%	
Other	485	485			8.33%	
	5,818		5,818		100.00	100.00%
Partial Total			***5,818***			

CONSTRUCTORS, INC

Dirt, Asphalt, Concrete, and Utilities Construction
Aggregate and Asphalt Products

Proposal Submitted To:	TATSCH CONSTRUCTION	Job Name:	PAVING
Attn:	RICHARD ROGERS	Place of Job	WWTP - RUIDOSO, NM
Billing Address:	208 HIGHWAY 180 WEST	Architect or Engineer:	MOLZEN-CORBIN
City, State, Zip:	SILVER CITY, NM 88061	Date of Plans:	
Phone #:	575-538-3704 X 13	Date of Proposal:	17-Jul-09
Fax #:	575-538-2552	Special Note / Addendum(s):	NA

FURNISH LABOR, EQUIPMENT & MATERIALS TO INSTALL 12" OF SUBGRADE PREP, 6" COMPACTED BASE COURSE, AND 3" OF HOT MIX ASPHALT TO NEW WASTE WATER TREATMENT PLANT PER PLANS AND SPECS SUBMITTED. CHANGE ORDER TO SCOPE OF WORK, ADDING 353 SY OF BASE & PAVE. FOR $ 10,320.00

PRICE EXCLUSIONS:	SALES TAX &/OR TESTING

We Hereby Propose to furnish labor, materials and equipment to complete the project in accordance with above specifications, for the sum listed above plus New Mexico Gross Receipt Tax, with payment due upon receipt of invoice unless prior agreement has been made. Any alterations or deviations from the above specifications involving extra cost will be executed only upon written order, and will become an extra charge over and above the proposed amount above. If payment is not received within 30 days from date of invoice, interest will be charged at 1 1/2% per month or fraction of a month on the unpaid balance plus incidental collection costs, including attorney fees. (As allowed by New Mexico Statute N.M.S.A. 1978,Section 57-28-5). This proposal also serves as acknowledgment of Constructors' request for the location of underground facilities. The property owner and/or the General contractor is responsible for the location of such facilities on private property. Constructors, Inc. is not responsible for damages to underground facilities which are not located and/or mislocated. Facilities are defined as computer lines, telephone, gas, water, sewer, electric, sprinkler, or any other facility installed by man. Facilities shall be marked prior to the beginning of Constructors, Inc.'s work on the project site. If either party commences legal action to enforce its rights pursuant to this agreement, the prevailing party in the legal action shall be entitled to recover its reasonable attorney's fees and costs of litigation relating to the legal action, as determined by a court of competent jurisdiction.

All material is guaranteed to be as specified. All work is to be completed in a workman-like manner according to standard practices. Any alteration or deviation from above specifications involving extra costs will be executed only upon written orders, and will become an extra charge over and above the estimate. All agreements contingent upon strikes, accidents or delays beyond our control. Owner to carry fire, tornado and other necessary insurance. Our workers are fully covered by worker's compensation insurance. See additional conditions on back.

Authorized Signature: _____
TYLER DRAKULICH

Note: This proposal may be withdrawn by us if not accepted within 45 days.

Acceptance of Proposal--The above prices, specifications and conditions are satisfactory and are hereby accepted. You are authorized to do the work as specified. Payment will be made as outlined above.

Signature: _____

Date Accepted: _____

3003 S. BOYD DR. - CARLSBAD, NM 88220 - PHONE (575) 885-8838 - FAX (575) 887-0896
3300 S. SUNSET AVE. - ROSWELL, NM 88203 - PHONE (575) 622-1080 - FAX (575) 624-1795
3320 N.ENTERPRISE DR. - HOBBS, NM 88240 - PHONE (575) 392-1193 - FAX (575) 392-2729
SERVING CHAVES, EDDY AND LEA COUNTIES
Website - www.ciconstructors.com

DEPARTMENT: The Engineer is requesting pre-approval of this additional work from the Owner and NMED. The Contractor requested an immediate reply to this price proposal in order to prevent a second mobilization charge by the paving subcontractor. Please acknowledge pre-approval by replying to this request. This additional work in the amount of $17,980.62 will be added by Change Order to the Contract Documents after receipt of NMED approval. Seven (7) calendar days will be added to the Contract Time.

Please call me if you have any questions regarding this communication.

Angel Campos
Molzen-Corbin & Associates
acampos@molzencorbin.com
(505) 242-5700

This inbound email has been scanned by the MessageLabs Email Security System.

Confidentiality Notice: This e-mail, including all attachments is for the sole use of the intended recipient(s) and may contain confidential and privileged information. Any unauthorized review, use, disclosure or distribution is prohibited unless specifically provided under the New Mexico Inspection of Public Records Act. If you are not the intended recipient, please contact the sender and destroy all copies of this message. -- This email has been scanned by the Sybari - Antigen Email System.

Confidentiality Notice: This e-mail,including all attachments is for the sole use of the intended recipient(s) and may contain confidential and privileged information. Any unauthorized review,use,disclosure or distribution is prohibited unless specifically provided under the New Mexico Inspection of Public Records Act. If you are not the intended recipient, please contact the sender and destroy all copies of this message. -- This email has been scanned by the MessageLabs Email Security System.

Angel Campos

From: Randy Camp [RandallCamp@ruidoso-nm.gov]
Sent: Tuesday, July 21, 2009 8:45 AM
To: Angel Campos
Subject: RE: Ruidoso Phase 1A - Engineer's Review and Request for Preapproval of CP#22

Angel,
On behalf of the Village of Ruidoso, I approve of this change order.
Randall Camp
Public Works Director
Village of Ruidoso

-----Original Message-----
From: Angel Campos [mailto:acampos@molzencorbin.com]
Sent: Monday, July 20, 2009 8:17 AM
To: RandallCamp@ruidoso-nm.gov; cordpwd@zianet.com; LisaSanchez@ruidoso-nm.gov; williammorris@ruidoso-nm.gov; sandy.edens@state.nm.us; BobbySnowden@ruidoso-nm.gov
Cc: Del Archuleta; molzencorbin@windstream.net; John Tellez
Subject: Ruidoso Phase 1A - Engineer's Review and Request for Preapproval of CP#22

July 20, 2009

TO: Randall Camp, Village of Ruidoso
Bill Morris, Village of Ruidoso
Cleatus Richards, City of Ruidoso Downs
Sandy Edens, New Mexico Environment Department

RE: Engineer's Review of Change Proposal No. 22
Relocate Sludge Storage Area Drop Inlet, Regrade and Pave Portion of Sludge Storage Area

A. SCOPE AND JUSTIFICATION: The sludge storage area surface runoff drop inlet was removed by the Contractor. Afterwards, Bobby Snowden, Plant Operator identified the need for retaining the drop inlet to capture and return surface runoff from the sludge storage area to the head of the treatment plant. The previous drop inlet location was changed to fit the new drainage and grading plan. In addition, the west portion of the sludge drainage area required to be regraded to capture surface runoff in the new drop let. The area of the western portion is approximately 353 square yards. The Contractor's price proposal is based on the Engineer's grading plan of July 15, 2009 (copy attached). The revised grading plan is to accommodate the new location of the sludge storage area drop inlet.

B. ENGINEER'S COMMENTS: The Contractor's price proposal itemizes all labor, materials, equipment required to complete the work. Asphalt removal costs equate to approximately $13 per cubic yard. The price proposal from the asphalt paving subcontractor at $10,320 equates to approximately $29 per cubic yard. The Contractor's price proposal is for a total amount of $17,980.62. The price proposal includes the allowable Contractor markups.
We find the price proposal reasonable for the scope of work. A time extension of seven (7) calendar days is requested by the Contractor.

C. SUMMARY - REQUEST FOR APPROVAL BY OWNER AND NEW MEXICO ENVIRONMENT DEPARTMENT: The Engineer is requesting pre-approval of this additional work from the Owner and NMED. The Contractor requested an immediate reply to this price proposal in order to prevent a second mobilization charge by the paving subcontractor. Please acknowledge pre-

approval by replying to this request. This additional work in the amount of $17,980.62 will be added by Change Order to the Contract Documents after receipt of NMED approval. Seven (7) calendar days will be added to the Contract Time.

Please call me if you have any questions regarding this communication.

Angel Campos
Molzen-Corbin & Associates
acampos@molzencorbin.com
(505) 242-5700

Angel Campos

From: Cleatus Richards [cordpwd@zianet.com]
Sent: Monday, July 20, 2009 8:58 AM
To: Angel Campos
Subject: Re: Ruidoso Phase 1A - Engineer's Review and Request for Preapproval of CP#22

Angel:
I have reviewed change proposal # 22 to Relocate Sludge Drop Inlet and regrade portion of sludge storage area at aditional cost of $ 17,980.62 and add seven (7) calendar days to contract time and hereby acknowledge my pre-approval of same.
Cleatus Richards
City of Ruidoso Downs
----- Original Message -----
From: "Angel Campos" <acampos@molzencorbin.com>
To: <RandallCamp@ruidoso-nm.gov>; <cordpwd@zianet.com>; <LisaSanchez@ruidoso-nm.gov>; <williammorris@ruidoso-nm.gov>; <sandy.edens@state.nm.us>; <BobbySnowden@ruidoso-nm.gov>
Cc: "Del Archuleta" <darchuleta@molzencorbin.com>; <molzencorbin@windstream.net>; "John Tellez" <jtellez@molzencorbin.com>
Sent: Monday, July 20, 2009 8:16 AM
Subject: Ruidoso Phase 1A - Engineer's Review and Request for Preapproval of CP#22

July 20, 2009

TO: Randall Camp, Village of Ruidoso
Bill Morris, Village of Ruidoso
Cleatus Richards, City of Ruidoso Downs
Sandy Edens, New Mexico Environment Department

RE: Engineer's Review of Change Proposal No. 22
Relocate Sludge Storage Area Drop Inlet, Regrade and Pave Portion of Sludge Storage Area

A. SCOPE AND JUSTIFICATION: The sludge storage area surface runoff drop inlet was removed by the Contractor. Afterwards, Bobby Snowden, Plant Operator identified the need for retaining the drop inlet to capture and return surface runoff from the sludge storage area to the head of the treatment plant. The previous drop inlet location was changed to fit the new drainage and grading plan. In addition, the west portion of the sludge drainage area required to be regraded to capture surface runoff in the new drop let. The area of the western portion is approximately 353 square yards. The Contractor's price proposal is based on the Engineer's grading plan of July 15, 2009 (copy attached). The revised grading plan is to accommodate the new location of the sludge storage area drop inlet.

B. ENGINEER'S COMMENTS: The Contractor's price proposal itemizes all labor, materials, equipment required to complete the work. Asphalt removal costs equate to approximately $13 per cubic yard. The price proposal from the asphalt paving subcontractor at $10,320 equates to approximately $29 per cubic yard. The Contractor's price proposal is for a total amount of $17,980.62. The price proposal includes the allowable Contractor markups. We find the price proposal reasonable for the scope of work. A time extension of seven (7) calendar days is requested by the Contractor.

C. SUMMARY - REQUEST FOR APPROVAL BY OWNER AND NEW MEXICO ENVIRONMENT DEPARTMENT: The Engineer is requesting pre-approval of this additional work from the Owner and NMED. The Contractor requested an immediate reply to this price proposal in order to prevent a second mobilization charge by the paving subcontractor. Please acknowledge pre-approval by replying to this request. This additional work in the amount of $17,980.62 will be added by Change Order to the Contract Documents after receipt of NMED approval. Seven (7) calendar days will be added to the Contract Time.

Please call me if you have any questions regarding this communication.

Angel Campos
Molzen-Corbin & Associates
acampos@molzencorbin.com
(505) 242-5700

July 28, 2009

TO: Randall Camp, Village of Ruidoso
Bill Morris, Village of Ruidoso
Cleatus Richards, City of Ruidoso Downs
Sandy Edens, New Mexico Environment Department

RE: Engineer's Review of Change Proposal No. 23
Sidewalk at UV Structure Area

A. SCOPE AND JUSTIFICATION: The plant operators have raised a concern regarding access to the UV Control Panel located at the NW corner of the structure. Presently the area is to be filled with large rip-rap rock.
Access will not be very frequent and the sidewalk will make it easier for the Operators. Bobby Snowden, plant operator request for the Engineer to consider a sidewalk to accommodate easier access to the UV Control Panel. The attached drawing shows the limits of the additional
18 linear feet of sidewalk.

B. ENGINEER'S COMMENTS: The Contractor's price proposal itemizes all labor, materials, equipment required to complete the placement of 72 square feet of sidewalk. The sidewalk placement cost without Contractor markup is $15.44 per square foot. The Contractor's price proposal is for a total amount of $1,278.56. The price proposal includes the allowable Contractor markup. We find the price proposal reasonable for the scope of work. A time extension of two (2) calendar days is requested by the Contractor.

C. SUMMARY - REQUEST FOR APPROVAL BY OWNER AND NEW MEXICO ENVIRONMENT DEPARTMENT: The Engineer is requesting pre-approval of this additional work from the Owner and NMED. Please acknowledge pre-approval by replying to this request. This additional work in the amount of
$1,278.56 will be added by Change Order to the Contract Documents after receipt of NMED approval. Two (2) calendar days will be added to the Contract Time.

Please call me if you have any questions regarding this communication.

Angel Campos
Molzen-Corbin & Associates
acampos@molzencorbin.com
(505) 242-5700

This inbound email has been scanned by the MessageLabs Email Security System.

Confidentiality Notice: This e-mail, including all attachments is for the sole use of the intended recipient(s) and may contain confidential and privileged information. Any unauthorized review, use, disclosure or distribution is prohibited unless specifically provided under the New Mexico Inspection of Public Records Act. If you are not the intended recipient, please contact the sender and destroy all copies of this message. -- This email has been scanned by the Sybari - Antigen Email System.

Confidentiality Notice: This e-mail,including all attachments is for the sole use of the intended recipient(s) and may contain confidential and privileged information. Any unauthorized review,use,disclosure or distribution is prohibited unless specifically provided under the New Mexico Inspection of Public Records Act. If you are not the intended recipient, please contact the sender and destroy all copies of this message. -- This email has been scanned by the MessageLabs Email Security System.

Tatsch Construction, Inc.

GENERAL CONTRACTORS

Licenses: NM 15206, AZ 074121 & 074122

208 Highway 180 West
Silver City, NM 88061

Phone: 575-538-3704 Fax: 575-538-2552

www.tatschconstruction.com

28-July-2009

To: Angel Campos
Molzen-Corbin & Associates
2701 Miles Road, S.E.
Albuquerque, NM 87106

Re: **Change Proposal No. 23**
Phase 1A - Sludge Handling and Ultraviolet Disinfection Facilities

RFP: **A.Campos e-nmail dated 28 July 2009**

Description: **Provide additional sidewalks at UV Structure & Generator Pad as per hand sketch dated 27 July 2009.**

Excludes:

General Work: Tatsch Construction Inc.				1,102.00	
Bond Premium	1.279 M		$6.00	7.67	
Subcontract Bond Premium	0.000 M		$25.00	0.00	
Builders Risk Insurance	12.786 C		$0.0873	1.12	
Owner-Contractor Protective Insurance	1.279 M		$0.7850	1.00	
			Subtotal	1,111.79	
		Fee		166.77	
			Subtotal		1,278.56
Subcontracts: (none)				0.00	
			Subtotal	0.00	
		Fee on Subcontracts		0.00	
			Subtotal		0.00
			Total This Change Proposal		**$1,278.56**

Additional contract time in the amount of two **(2) calendar days** will be required for this work.
This proposal is offered **for written acceptance by the Owner no later than 31 July 2009** and is thereafter **withdrawn.**

Richard A. Rogers

Submitted by: Richard A. Rogers, Vice President

Item	Description	Location	Takeoff Qty			W%	Conversion		Order Qty		Unit Price	Amount
CP#23												
* unassigned *												
2234.00	*Granular Sub-Slab Fill*											
abc	Aggregate Base Course		3.042	CuYd	Mat		1.40000	Tons/CuYd	4.26	Tons	18.00	77
	Granular Sub-Slab Fill											77
2235.00	*Fine Grade for Slabs*											
fg	Fine Grade Slabs		100.00	SqFt	Lab		96.50000	SqFt/mh	1.04	mh	29.221	30
					Eqp		141.00000	SqFt/hr	0.71	hr	29.60	21
gfil	Place Granular Fill		3.042	CuYd	Lab		3.25000	CuYd/mh	0.94	mh	33.032	31
					Eqp		14.62500	CuYd/hr	0.21	hr	62.500	13
	Fine Grade for Slabs											95
	1.972 Labor hours											
	0.92 Equipment hours											
2251.00	*Backfill Footings*											
1000	Backfill and Compact Footings		0.26	CuYd	Lab		3.87500	CuYd/mh	0.07	mh	33.032	2
					Eqp		6.00000	CuYd/hr	0.04	hr	37.83	2
	Backfill Footings											4
	0.07 Labor hours											
	0.043 Equipment hours											
2255.00	*Hand Excavation*											
1000	Hand Excavation		0.714	CuYd	Lab		3.50000	mh/CuYd	2.50	mh	23.504	59
	Hand Excavation											59
	2.50 Labor hours											
2259.00	*Dispose Excavated Mat'l*											
1000	Excess Ftg. Material Disposal		0.46	CuYd	Lab		23.33333	CuYd/mh	0.02	mh	38.03	1
					Eqp		28.00000	CuYd/hr	0.02	hr	54.00	1
	Dispose Excavated Mat'l											2
	0.02 Labor hours											
	0.02 Equipment hours											
3010.00	*Concrete - Ready Mix*											
400a	4000psi Concrete (Type I,II)		1.91	CuYd	Mat	0			1.91	CuYd	122.000	232
load	Short Load Delivery Charge		1.00	Load	Mat				1.00	Load	115.000	115
	Concrete - Ready Mix											347
3350.00	*Slab on Grade Edge Forms*											
8	8"h Slab Edge Forms		29.333	SFCA	Lab		6.66667	SFCA/mh	4.40	mh	31.314	138
					Mat				29.33	SFCA	0.08	2
28rl	2x8-RL Hem-Fir		44.00	LnFt	Mat		750.00000	LnFt/MBF	0.06	MBF	1,150.00	67
stak	3/4"x 2'0" Square Steel Stakes		34.00	Use	Mat	0	4.00000	Use/Each	8.50	Each	3.85	33
	Slab on Grade Edge Forms											240
	4.40 Labor hours											
3523.10	*Crane Place Sidewalk*											
410	Crane Place 4" Sidewalks		1.91	CuYd	Lab		0.75000	CuYd/mh	2.54	mh	34.502	88
					Eqp		3.75000	CuYd/hr	0.51	hr	139.063	71
					Oth				1.91	CuYd	0.30	1

Item	Description	Location	Takeoff Qty			W%	Conversion		Order Qty		Unit Price	Amount
	Crane Place Sidewalk											*159*
	2.54 Labor hours											
	0.51 Equipment hours											
3610.10	*Broom/Strike Sidewlk*											
	28 Broom Finish 28 sqft Sidewalks		28.00	SqFt	Lab		20.93113	SqFt/mh	1.34	mh	33.192	44
					Mat				28.00	SqFt	0.02	1
					Oth				28.00	SqFt	0.01	0
	95 Broom Finish 95 sqft Sidewalks		72.00	SqFt	Lab		36.16898	SqFt/mh	1.99	mh	33.192	66
					Mat				72.00	SqFt	0.02	1
					Oth				72.00	SqFt	0.01	1
	Broom/Strike Sidewlk											*113*
	3.33 Labor hours											
3640.00	*Liquid Slb Seal/Hard*											
c309	ASTM C-309 Curing Compound		100.00	SqFt	Mat	10	200.00000	SqFt/Gal	0.55	Gal	8.95	5
					Oth		6,000.00000	SqFt/LSum	0.02	LSum	60.00	1
	Liquid Slb Seal/Hard											*6*
	* unassigned *											1,102
	14.83 Labor hours											
	1.484 Equipment hours											
	CP#23											***1,102***
	14.83 Labor hours											
	1.484 Equipment hours											

Partial Totals

Description	Amount	Cuts/Adds	Net Amount	Totals	Hours	Rate	C Cost per Unit	rcent of Total	
Labor	459		459		14.825 hrs			41.59%	
Material	534		534					48.37%	
Subcontract									
Equipment	107		107		1.484 hrs			9.71%	
Other	3		3					0.23%	
	1,103			1,103				100.00	100.00%
Partial Total				***1,103***					

Angel Thanks John

UVDIS unit extra sidewalk

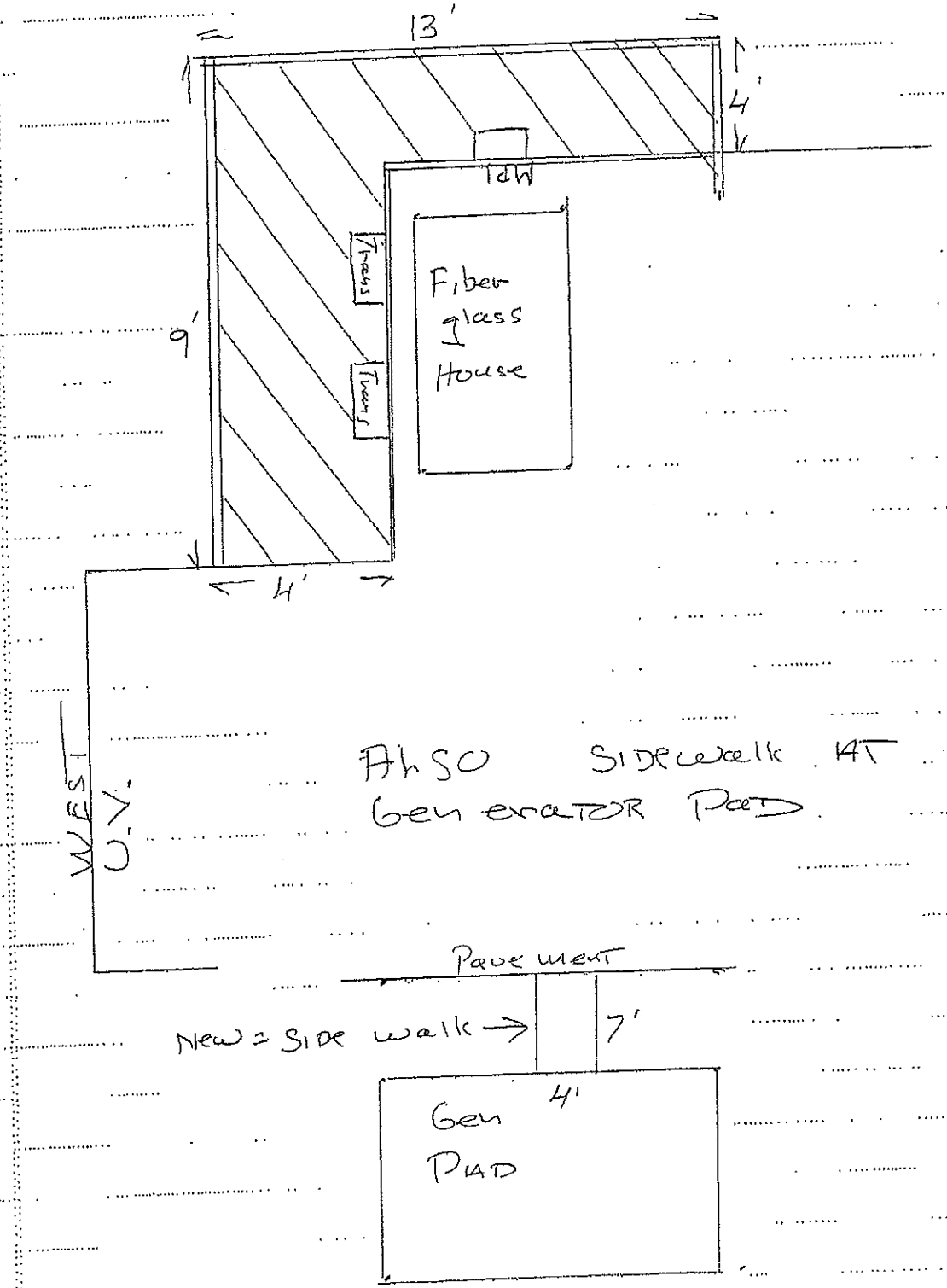

Angel Campos

From: EdensJr, Walter, NMENV [Sandy.Edens@state.nm.us]
Sent: Tuesday, July 28, 2009 2:35 PM
To: Angel Campos
Subject: RE: Change Proposal #23 - Sidewalks @ UV & Generator

I concur in the change. Please advise anticipated completion date for the Tatsch Ph 1A.

Sandy Edens, P.E.
Project Manager
New Mexico Environment Department, CPB
5500 San Antonio NE
Albuquerque, NM 87109
505-222-9512

-----Original Message-----
From: Angel Campos [mailto:acampos@molzencorbin.com]
Sent: Tuesday, July 28, 2009 10:44 AM
To: RandallCamp@ruidoso-nm.gov; cordpwd@zianet.com; williammorris@ruidoso-nm.gov; EdensJr, Walter, NMENV
Cc: molzencorbin@windstream.net; Archuleta, Del
Subject: Change Proposal #23 - Sidewalks @ UV & Generator

July 28, 2009

TO: Randall Camp, Village of Ruidoso
Bill Morris, Village of Ruidoso
Cleatus Richards, City of Ruidoso Downs
Sandy Edens, New Mexico Environment Department

RE: Engineer's Review of Change Proposal No. 23
Sidewalk at UV Structure Area

A. SCOPE AND JUSTIFICATION: The plant operators have raised a concern regarding access to the UV Control Panel located at the NW corner of the structure. Presently the area is to be filled with large rip-rap rock.
Access will not be very frequent and the sidewalk will make it easier for the Operators. Bobby Snowden, plant operator request for the Engineer to consider a sidewalk to accommodate easier access to the UV Control Panel. The attached drawing shows the limits of the additional
18 linear feet of sidewalk.

B. ENGINEER'S COMMENTS: The Contractor's price proposal itemizes all labor, materials, equipment required to complete the placement of 72 square feet of sidewalk. The sidewalk placement cost without Contractor markup is $15.44 per square foot. The Contractor's price proposal is for a total amount of $1,278.56. The price proposal includes the allowable Contractor markup. We find the price proposal reasonable for the scope of work. A time extension of two (2) calendar days is requested by the Contractor.

C. SUMMARY - REQUEST FOR APPROVAL BY OWNER AND NEW MEXICO ENVIRONMENT DEPARTMENT: The Engineer is requesting pre-approval of this additional work from the Owner and NMED. Please acknowledge pre-approval by replying to this request. This additional work in the amount of

$1,278.56 will be added by Change Order to the Contract Documents after receipt of NMED approval. Two (2) calendar days will be added to the Contract Time.

Please call me if you have any questions regarding this communication.

Angel Campos
Molzen-Corbin & Associates
acampos@molzencorbin.com
(505) 242-5700

This inbound email has been scanned by the MessageLabs Email Security System.

Confidentiality Notice: This e-mail, including all attachments is for the sole use of the intended recipient(s) and may contain confidential and privileged information. Any unauthorized review, use, disclosure or distribution is prohibited unless specifically provided under the New Mexico Inspection of Public Records Act. If you are not the intended recipient, please contact the sender and destroy all copies of this message. -- This email has been scanned by the Sybari - Antigen Email System.

Confidentiality Notice: This e-mail,including all attachments is for the sole use of the intended recipient(s) and may contain confidential and privileged information. Any unauthorized review,use,disclosure or distribution is prohibited unless specifically provided under the New Mexico Inspection of Public Records Act. If you are not the intended recipient, please contact the sender and destroy all copies of this message. -- This email has been scanned by the MessageLabs Email Security System.

Angel Campos

From: Randy Camp [RandallCamp@ruidoso-nm.gov]
Sent: Tuesday, July 28, 2009 1:21 PM
To: Angel Campos
Subject: RE: Change Proposal #23 - Sidewalks @ UV & Generator

On behalf of the Village of Ruidoso, I concur.
Randall Camp,
Public Works Director
Village of Ruidoso

-----Original Message-----
From: Angel Campos [mailto:acampos@molzencorbin.com]
Sent: Tuesday, July 28, 2009 10:44 AM
To: RandallCamp@ruidoso-nm.gov; cordpwd@zianet.com; williammorris@ruidoso-nm.gov; Sandy.Edens@state.nm.us
Cc: molzencorbin@windstream.net; Del Archuleta
Subject: Change Proposal #23 - Sidewalks @ UV & Generator

July 28, 2009

TO: Randall Camp, Village of Ruidoso
Bill Morris, Village of Ruidoso
Cleatus Richards, City of Ruidoso Downs
Sandy Edens, New Mexico Environment Department

RE: Engineer's Review of Change Proposal No. 23
Sidewalk at UV Structure Area

A. SCOPE AND JUSTIFICATION: The plant operators have raised a concern regarding access to the UV Control Panel located at the NW corner of the structure. Presently the area is to be filled with large rip-rap rock.
Access will not be very frequent and the sidewalk will make it easier for the Operators.
Bobby Snowden, plant operator request for the Engineer to consider a sidewalk to accommodate easier access to the UV Control Panel.
The attached drawing shows the limits of the additional 18 linear feet of sidewalk.

B. ENGINEER'S COMMENTS: The Contractor's price proposal itemizes all labor, materials, equipment required to complete the placement of 72 square feet of sidewalk. The sidewalk placement cost without Contractor markup is
$15.44 per square foot. The Contractor's price proposal is for a total amount of $1,278.56. The price proposal includes the allowable Contractor markup. We find the price proposal reasonable for the scope of work. A time extension of two (2) calendar days is requested by the Contractor.

C. SUMMARY - REQUEST FOR APPROVAL BY OWNER AND NEW MEXICO ENVIRONMENT DEPARTMENT: The Engineer is requesting pre-approval of this additional work from the Owner and NMED. Please acknowledge pre-approval by replying to this request. This additional work in the amount of $1,278.56 will be added by Change Order to the Contract Documents after receipt of NMED approval.
Two (2) calendar days will be added to the Contract Time.

Please call me if you have any questions regarding this communication.

Angel Campos
Molzen-Corbin & Associates
acampos@molzencorbin.com
(505) 242-5700

Angel Campos

From: Cleatus Richards [cordpwd@zianet.com]
Sent: Tuesday, July 28, 2009 11:47 AM
To: Angel Campos
Subject: Re: Change Proposal #23 - Sidewalks @ UV & Generator

Angel:
I have reviewed change proposal #23 to add sidewalks at the UV structure area at additional cost of $ 1,278.56 and hereby acknowledge my pre approval of same.
Cleatus Richards
City of Ruidoso Downs
----- Original Message -----
From: "Angel Campos" <acampos@molzencorbin.com>
To: <RandallCamp@ruidoso-nm.gov>; <cordpwd@zianet.com>; <williammorris@ruidoso-nm.gov>; <Sandy.Edens@state.nm.us>
Cc: <molzencorbin@windstream.net>; "Del Archuleta" <darchuleta@molzencorbin.com>
Sent: Tuesday, July 28, 2009 10:43 AM
Subject: Change Proposal #23 - Sidewalks @ UV & Generator

July 28, 2009

TO: Randall Camp, Village of Ruidoso
Bill Morris, Village of Ruidoso
Cleatus Richards, City of Ruidoso Downs
Sandy Edens, New Mexico Environment Department

RE: Engineer's Review of Change Proposal No. 23
Sidewalk at UV Structure Area

A. SCOPE AND JUSTIFICATION: The plant operators have raised a concern regarding access to the UV Control Panel located at the NW corner of the structure. Presently the area is to be filled with large rip-rap rock.
Access will not be very frequent and the sidewalk will make it easier for the Operators.
Bobby Snowden, plant operator request for the Engineer to consider a sidewalk to accommodate easier access to the UV Control Panel.
The attached drawing shows the limits of the additional 18 linear feet of sidewalk.

B. ENGINEER'S COMMENTS: The Contractor's price proposal itemizes all labor, materials, equipment required to complete the placement of 72 square feet of sidewalk. The sidewalk placement cost without Contractor markup is
$15.44 per square foot. The Contractor's price proposal is for a total amount of $1,278.56. The price proposal includes the allowable Contractor markup. We find the price proposal reasonable for the scope of work. A time extension of two (2) calendar days is requested by the Contractor.

C. SUMMARY - REQUEST FOR APPROVAL BY OWNER AND NEW MEXICO ENVIRONMENT DEPARTMENT: The Engineer is requesting pre-approval of this additional work from the Owner and NMED. Please acknowledge pre-approval by replying to this request. This additional work in the amount of $1,278.56 will be added by Change Order to the Contract Documents after receipt of NMED approval.
Two (2) calendar days will be added to the Contract Time.

Please call me if you have any questions regarding this communication.

Angel Campos
Molzen-Corbin & Associates
acampos@molzencorbin.com
(505) 242-5700

EXHIBIT 4

CHANGE PROPOSAL NO. 24

INCLUDES:

1) **Notice to Proceed Based on Pre-Approvals Received From Owner and NMED with Contractor's Change Proposal No. 24**

2) **NMED Pre-Approval Dated July 29, 2009**

3) **Village of Ruidoso Pre-Approval Dated July 29, 2009**

4) **Ruidoso Downs Pre-Approval Dated July 29, 2009**

Angel Campos

To:	Richard A.Rogers
Cc:	RandallCamp@ruidoso-nm.gov; cordpwd@zianet.com; Sandy.Edens@state.nm.us; williammorris@ruidoso-nm.gov; Del Archuleta; molzencorbin@windstream.net; LisaSanchez@ruidoso-nm.gov
Subject:	Ruidoso 1A - CP#24 - Replace Existing Wash Water Line - Notice to Proceed
Attachments:	CP#24 - Replace Washwater Line.pdf

July 29, 2009

RE: Change Proposal 24 - Replace Existing Wash Water Line
Notice to Proceed

This is to inform Tatsch Construction that the Village of Ruidoso, City of Ruidoso Downs, and the New Mexico Environment Department have pre-approved Change Proposal No. 24 summarized in the Contractor's proposal dated July 29, 2009. By receipt of these pre-approvals, Tatsch Construction is authorized to proceed with this change proposal for the amount of $11,942.12. This additional work includes a time extension of seven (7) calendar days. This change proposal will be added to the Contract by the Change Order provisions of the Contract Documents and will be included in the next formal Change Order to the Contract.

Please call me, should you have any questions regarding this communication.

Sincerely,

Angel Campos
Molzen-Corbin & Associates
acampos@molzencorbin.com
(505) 242-5700

-----Original Message-----
From: EdensJr, Walter, NMENV [mailto:Sandy.Edens@state.nm.us]
Sent: Wednesday, July 29, 2009 10:45 AM
To: Angel Campos; RandallCamp@ruidoso-nm.gov; cordpwd@zianet.com; williammorris@ruidoso-nm.gov; LisaSanchez@ruidoso-nm.gov
Cc: Del Archuleta; molzencorbin@windstream.net
Subject: RE: Ruidoso 1A - CP#24 - Replace Existing Wash Water Line - Request for Pre-Approval

I concur in the change however I request a current status of funds remaining in the contingency.

Sandy Edens, P.E.
Project Manager
New Mexico Environment Department, CPB
5500 San Antonio NE
Albuquerque, NM 87109
505-222-9512

-----Original Message-----
From: Angel Campos [mailto:acampos@molzencorbin.com]
Sent: Wednesday, July 29, 2009 10:42 AM

To: RandallCamp@ruidoso-nm.gov; cordpwd@zianet.com; EdensJr, Walter, NMENV; williammorris@ruidoso-nm.gov; LisaSanchez@ruidoso-nm.gov
Cc: Archuleta, Del; molzencorbin@windstream.net
Subject: Ruidoso 1A - CP#24 - Replace Existing Wash Water Line - Request for Pre-Approval

July 29, 2009

TO: Randall Camp, Village of Ruidoso
Bill Morris, Village of Ruidoso
Cleatus Richards, City of Ruidoso Downs
Sandy Edens, New Mexico Environment Department

RE: Engineer's Review of Change Proposal No. 24
Replace Existing 1-1/2" Washwater Piping at Sludge Beds

A. SCOPE AND JUSTIFICATION: The existing washwater pipe located on the north side of the south sludge beds is in very poor physical condition.
Per Bobby Snowden, plant operator, the existing washwater pipe is not reliable and should be replaced. Bobby Snowden confirmed with Randall Camp, Public Works director that that section of pipe should be replaced before the area is paved. The existing 1-1/2" PVC pipe will be replaced with 2" Schedule 80 PVC pipe (approximately 380 feet). In addition, the scope of work includes: replace three hose bib connections and valves, three new traffic valve boxes, shut off valves, connection fittings, and
concrete slab on grade to protect each of the valve boxes.

B. ENGINEER'S COMMENTS: The Contractor's price proposal itemizes all labor, materials, equipment required to complete the work. The Contractor's price proposal is for a total amount of $11,942.12. The price proposal includes the allowable Contractor markups. We find the price proposal reasonable for the scope of work. A time extension of seven (7) calendar days is requested by the Contractor.

C. SUMMARY - REQUEST FOR APPROVAL BY OWNER AND NEW MEXICO ENVIRONMENT DEPARTMENT: The Engineer is requesting pre-approval of this additional work from the Owner and NMED. Please acknowledge pre-approval by replying to this request. This additional work in the amount of
$11,942.12 will be added by Change Order to the Contract Documents after receipt of NMED approval. Seven (7) calendar days will be added to the Contract Time.

NOTE: THE CONTRACTOR IS REQUESTING AN IMMEDIATE REPLY TO THIS PRE-APPROVAL REQUEST. THE PAVING SUBCONTRACTOR IS SCHEDULED ON SITE ON AUGUST 3 (MONDAY) TO START THE PAVING WORK. IF AN IMMEDIATE REPLY IS NOT PROVIDED BEFORE 2PM TODAY, TATSCH CONSTRUCTION WILL WITHDRAW THEIR PROPOSAL AND NOT REPLACE THE WASHWATER PIPE.

Please call me if you have any questions regarding this communication.

Angel Campos
Molzen-Corbin & Associates
acampos@molzencorbin.com
(505) 242-5700

This inbound email has been scanned by the MessageLabs Email Security System.

Tatsch Construction, Inc.

GENERAL CONTRACTORS

Licenses: NM 15206, AZ 074121 & 074122

208 Highway 180 West
Silver City, NM 88061
Phone: 575-538-3704 Fax: 575-538-2552
www.tatschconstruction.com

29-July-2009

To: Angel Campos
Molzen-Corbin & Associates
2701 Miles Road, S.E.
Albuquerque, NM 87106

Re: **Change Proposal No. 24**
Phase 1A - Sludge Handling and Ultraviolet Disinfection Facilities

RFP: **Verbal 28 July 2009**

Description: **Replace existing 1-1/2" Washwater piping parallel with sludge bed wall with 2" Sch. 80 pipe.**

Excludes:

General Work: Tatsch Construction Inc.				10,293.00	
Bond Premium	11.942 M		$6.00	71.65	
Subcontract Bond Premium	0.000 M		$25.00	0.00	
Builders Risk Insurance	119.421 C		$0.0873	10.43	
Owner-Contractor Protective Insurance	11.942 M		$0.7850	9.37	
			Subtotal	10,384.45	
		Fee		1,557.67	
			Subtotal		11,942.12
Subcontracts: (none)				0.00	
			Subtotal	0.00	
		Fee on Subcontracts		0.00	
			Subtotal		0.00
			Total This Change Proposal		**$11,942.12**

Additional contract time in the amount of seven **(7) calendar days** will be required for this work.
This proposal is offered **for written acceptance by the Owner no later than 29 July 2009** and is thereafter **withdrawn.**

Richard A. Rogers

Submitted by: Richard A. Rogers, Vice President

Estimate Details Report

Ruidoso 1A - Change Order

Item	Description	Location	Takeoff Qty			W%	Conversion		Order Qty		Unit Price	Amount
CP#24												
* unassigned *												
2235.00	*Fine Grade for Slabs*											
fg	Fine Grade Slabs		47.25	SqFt	Lab		96.50000	SqFt/mh	0.49	mh	29.221	14
					Eqp		141.00000	SqFt/hr	0.34	hr	29.60	10
	Fine Grade for Slabs											*24*
	0.49 Labor hours											
	0.34 Equipment hours											
2750.00	*Excavate Utility Trenches*											
bh	1/4cy Backhoe		142.333	CuYd	Lab		10.00000	CuYd/mh	14.23	mh	47.89	682
					Eqp		18.00000	CuYd/hr	7.91	hr	55.50	439
	Excavate Utility Trenches											*1,120*
	14.233 Labor hours											
	7.91 Equipment hours											
2751.00	*Backfill Utility Trenches*											
dp	Diesel Plate Compactor		137.63	CuYd	Lab		4.00000	CuYd/mh	34.41	mh	24.59	846
					Eqp		4.72225	CuYd/hr	29.14	hr	17.83	520
hand	Hand Bedding		4.71	CuYd	Lab		1.25000	mh/CuYd	5.88	mh	23.504	138
					Eqp		0.83750	hr/CuYd	3.94	hr	13.15	52
l515	2cy Loader		137.63	CuYd	Lab		35.00000	CuYd/mh	3.93	mh	51.002	201
					Eqp		42.00000	CuYd/hr	3.28	hr	62.500	205
wt	Water Truck		137.63	CuYd	Lab		58.33333	CuYd/mh	2.36	mh	25.05	59
					Eqp		70.00000	CuYd/hr	1.97	hr	40.63	80
	Backfill Utility Trenches											*2,100*
	46.582 Labor hours											
	38.33 Equipment hours											
2758.00	*Select Utility Backfill*											
1000	Pit Run Sand and Gravel		40.86	CuYd	Mat	15			46.98	CuYd	6.50	305
	Select Utility Backfill											*305*
2759.00	*Dispose of Excavated Matl*											
disp	Disposal of Excavated Material		40.86	CuYd	Lab		20.00000	CuYd/mh	2.04	mh	38.03	78
					Eqp		24.00000	CuYd/hr	1.70	hr	69.75	119
	Dispose of Excavated Matl											*196*
	2.043 Labor hours											
	1.702 Equipment hours											
3010.00	*Concrete - Ready Mix*											
400a	4000psi Concrete (Type I,II)		1.40	CuYd	Mat	0			1.40	CuYd	123.000	172
load	Short Load Delivery Charge		1.00	Load	Mat				1.00	Load	115.000	115
	Concrete - Ready Mix											*287*
3350.00	*Slab on Grade Edge Forms*											
9	9"h Slab Edge Forms		36.00	SFCA	Lab		7.14286	SFCA/mh	5.04	mh	31.314	158
					Mat				36.00	SFCA	1.25	45
2arl	2x10-RL Hem-Fir		48.00	LnFt	Mat		600.00000	LnFt/MBF	0.08	MBF	690.00	55
stak	3/4"x 2'0" Square Steel Stakes		42.00	Use	Mat	0	4.00000	Use/Each	10.50	Each	3.85	40

Item	Description	Location	Takeoff Qty			W%	Conversion		Order Qty		Unit Price	Amount
	Slab on Grade Edge Forms											
	5.04 Labor hours											298
3503.00	*Chute Slabs on Grade*											
	810 Chute Place 8" Slabs on Grade		1.40	CuYd	Lab		3.25802	CuYd/mh	0.43	mh	28.11	12
					Oth				1.40	CuYd	0.30	0
	Chute Slabs on Grade											
	0.43 Labor hours											12
3610.00	*Broom Finish Slabs*											
	720 Broom Finish 720 sqft Slabs		-0.75	SqFt	Lab		122.40000	SqFt/mh	-0.01	mh	33.192	0
					Mat				-0.75	SqFt	0.02	0
					Oth				-0.75	SqFt	0.01	0
	Broom Finish Slabs											
	-0.005 Labor hours											0
3610.10	*Broom/Strike Sidewlk*											
	19 Broom Finish 19 sqft Sidewalks		48.00	SqFt	Lab		17.44261	SqFt/mh	2.75	mh	33.192	91
					Mat				48.00	SqFt	0.02	1
					Oth				48.00	SqFt	0.01	0
	Broom/Strike Sidewlk											
	2.752 Labor hours											93
3640.00	*Liquid Slb Seal/Hard*											
c309	ASTM C-309 Curing Compound		47.25	SqFt	Mat	10	200.00000	SqFt/Gal	0.26	Gal	8.95	2
					Oth		6,000.00000	SqFt/LSum	0.01	LSum	60.00	0
	Liquid Slb Seal/Hard											
												3
15012.ac	*1-1/2" Galv. Steel Pipe*											
4n 4	1-1/2" x 4" Galv. Nipple Sch.40 Steel		3.00	Each	Mat				3.00	Each	1.50	5
	1-1/2" Galv. Steel Pipe											
												5
15031.20	*20" Ductile Iron Pipe*											
	3816 20" Bell 'Tyton' Pipe x 18'0"											
lnft	20" Stock Pipe Instal'n		6.00	LnFt	Mat	0			6.00	LnFt	38.81	233
			6.00	LnFt	Lab		4.43396	LnFt/mh	1.35	mh	35.69	48
poly	20" Polyethlyene Wrap				Eqp		17.85714	LnFt/hr	0.34	hr	66.463	22
			6.00	lnft	Lab		25.00000	lnft/mh	0.24	mh	35.69	9
					Mat				6.00	lnft	0.86	5
	20" Ductile Iron Pipe											
	1.593 Labor hours											317
	0.34 Equipment hours											
15061.01	*1" I.P.S. PVC Pipe*											
lnft	1" PVC Pipe Installation		2.00	lnft	Lab		11.90476	lnft/mh	0.17	mh	35.69	6
sw	1" Solvent Weld Pipe Connection		3.00	each	Lab		0.14000	mh/each	0.42	mh	35.69	15
					Mat				3.00	each	0.10	0
	1" I.P.S. PVC Pipe											
	0.59 Labor hours											21
15061.02	*2" I.P.S. PVC Pipe*											
	0218 2" Sch. 80 PVC Pipe											
lnft	2" PVC Pipe Installation		380.00	LnFt	Mat	0			380.00	LnFt	1.54	585
sw	2" Solvent Weld Pipe Connection		406.00	lnft	Lab		8.08452	lnft/mh	50.34	mh	35.69	1,797
			38.00	each	Lab		0.20000	mh/each	7.60	mh	35.69	271
thd	2" Make-up Threaded Connection				Mat				38.00	each	0.20	8
			1.00	Each	Lab		0.14000	mh/Each	0.14	mh	35.69	5

Item	Description	Location	Takeoff Qty			W%	Conversion		Order Qty		Unit Price	Amount
	2" I.P.S. PVC Pipe											
	58.084 Labor hours											2,666
15061.a4	*1/2" I.P.S. PVC Pipe*											
sw	1/2" Solvent Weld Pipe Connection		2.00	each	Lab		0.08000	mh/each	0.16	mh	35.69	6
					Mat				2.00	each	0.05	0
thd	1/2" Make-up Threaded Connection		9.00	Each	Lab		11.45000	Each/mh	0.79	mh	35.69	28
	1/2" I.P.S. PVC Pipe											34
	0.95 Labor hours											
15061.ac	*1-1/2" I.P.S. PVC Pipe*											
0200	1-1/2" Sch. 80 PVC Pipe		20.00	LnFt	Mat	0			20.00	LnFt	2.54	51
lnft	1-1/2" PVC Pipe Installation		29.00	lnft	Lab		6.40336	lnft/mh	3.45	mh	35.69	123
sw	1-1/2" Solvent Weld Pipe Connection		9.00	each	Lab		0.18000	mh/each	1.62	mh	35.69	58
					Mat				9.00	each	0.15	1
thd	1-1/2" Make-up Threaded Connection		6.00	Each	Lab		0.13125	mh/Each	0.79	mh	35.69	28
	1-1/2" I.P.S. PVC Pipe											261
	5.86 Labor hours											
15062.01	*1" Sch.80 PVC Fittings*											
am	1" Male Adapter (SxMpt) Sch.80 PVC		2.00	Each	Mat	0			2.00	Each	3.88	8
	1" Sch.80 PVC Fittings											8
15062.02	*2" Sch.80 PVC Fittings*											
9s	2" 90 Ell (SxS) Sch.80 PVC		1.00	Each	Mat	0			1.00	Each	7.92	8
am	2" Male Adapter (SxMpt) Sch.80 PVC		1.00	Each	Mat	0			1.00	Each	28.52	29
bs 3	2" x 1" Bushing (Spg x S) Sch.80 PVC		2.00	Each	Mat	0			2.00	Each	5.00	10
cs	2" Coupling (SxS) Sch.80 PVC		14.00	Each	Mat	0			14.00	Each	4.26	60
ts 1	2" x 1-1/2" Tee (SxSxS) Sch.80 PVC		3.00	Each	Mat	0			3.00	Each	16.51	50
ts 3	2" x 1" Tee (SxSxS) Sch.80 PVC		1.00	Each	Mat	0			1.00	Each	16.51	17
	2" Sch.80 PVC Fittings											172
15062.ac	*1-1/2" Sch.80 PVC Flgs.*											
9s	1-1/2" 90 Ell (SxS) Sch.80 PVC		3.00	Each	Mat	0			3.00	Each	5.04	15
am	1-1/2" Male Adapter (SxMpt) Sch.80 PVC		6.00	Each	Mat	0			6.00	Each	11.58	69
	1-1/2" Sch.80 PVC Flgs.											85
15100.ac	*1-1/2" Valve Installation*											
v	1-1/2" Valve (labor only)		3.00	Each	Lab		0.45000	mh/Each	1.35	mh	35.69	48
	1-1/2" Valve Installation											48
	1.35 Labor hours											
15101.ac	*1-1/2" Gate Valves*											
t	1-1/2" 125# Bronze Scr. G.V.		3.00	Each	Lab		1.40000	mh/Each	4.20	mh	35.69	150
					Mat				3.00	Each	44.00	132
	1-1/2" Gate Valves											282
	4.20 Labor hours											
15190.00	*Mechanical Identification*											
tape	Magnetic Marker Tape		366.00	LnFt	Oth	5	1,000.00000	LnFt/Roll	0.38	Roll	47.82	18
	Mechanical Identification											18
15130.00	*U.G. Pull Boxes*											
1730	17"w x 30"l x 12"d Quasite Box		3.00	Each	Lab		4.00000	mh/Each	12.00	mh	35.69	428
					Mat				3.00	Each	457.98	1,374
					Oth				3.00	Each	45.00	135

Item	Description	Location	Takeoff Qty	W%	Conversion	Order Qty	Unit Price	Amount
	U.G. Pull Boxes							
	12.00 Labor hours							*1,937*
	* unassigned *							
	156.181 Labor hours							10,293
	48.610 Equipment hours							
	CP#24							
	156.181 Labor hours							***10,293***
	48.610 Equipment hours							

Partial Totals

Description	Amount	Cuts/Adds	Net Amount	Totals	Hours	Rate	C	Cost per Unit	rcent of Total	
Labor	5,299		5,299		156.181 hrs				51.47%	
Material	3,394		3,394						32.97%	
Subcontract										
Equipment	1,446		1,446		48.610 hrs				14.05%	
Other	155		155						1.50%	
	10,294			10,294					100.00	100.00%
Partial Total				***10,294***						

Angel Campos

From: EdensJr, Walter, NMENV [Sandy.Edens@state.nm.us]
Sent: Wednesday, July 29, 2009 10:45 AM
To: Angel Campos; RandallCamp@ruidoso-nm.gov; cordpwd@zianet.com; williammorris@ruidoso-nm.gov; LisaSanchez@ruidoso-nm.gov
Cc: Del Archuleta; molzencorbin@windstream.net
Subject: RE: Ruidoso 1A - CP#24 - Replace Existing Wash Water Line - Request for Pre-Approval

I concur in the change however I request a current status of funds remaining in the contingency.

Sandy Edens, P.E.
Project Manager
New Mexico Environment Department, CPB
5500 San Antonio NE
Albuquerque, NM 87109
505-222-9512
-----Original Message-----
From: Angel Campos [mailto:acampos@molzencorbin.com]
Sent: Wednesday, July 29, 2009 10:42 AM
To: RandallCamp@ruidoso-nm.gov; cordpwd@zianet.com; EdensJr, Walter, NMENV; williammorris@ruidoso-nm.gov; LisaSanchez@ruidoso-nm.gov
Cc: Archuleta, Del; molzencorbin@windstream.net
Subject: Ruidoso 1A - CP#24 - Replace Existing Wash Water Line - Request for Pre-Approval

July 29, 2009

TO: Randall Camp, Village of Ruidoso
Bill Morris, Village of Ruidoso
Cleatus Richards, City of Ruidoso Downs
Sandy Edens, New Mexico Environment Department

RE: Engineer's Review of Change Proposal No. 24
Replace Existing 1-1/2" Washwater Piping at Sludge Beds

A. SCOPE AND JUSTIFICATION: The existing washwater pipe located on the north side of the south sludge beds is in very poor physical condition.
Per Bobby Snowden, plant operator, the existing washwater pipe is not reliable and should be replaced. Bobby Snowden confirmed with Randall Camp, Public Works director that that section of pipe should be replaced before the area is paved. The existing 1-1/2" PVC pipe will be replaced with 2" Schedule 80 PVC pipe (approximately 380 feet). In addition, the scope of work includes: replace three hose bib connections and valves, three new traffic valve boxes, shut off valves, connection fittings, and
concrete slab on grade to protect each of the valve boxes.

B. ENGINEER'S COMMENTS: The Contractor's price proposal itemizes all labor, materials, equipment required to complete the work. The Contractor's price proposal is for a total amount of $11,942.12. The price proposal includes the allowable Contractor markups. We find the price proposal reasonable for the scope of work. A time extension of seven (7) calendar days is requested by the Contractor.

C. SUMMARY - REQUEST FOR APPROVAL BY OWNER AND NEW MEXICO ENVIRONMENT

DEPARTMENT: The Engineer is requesting pre-approval of this additional work from the Owner and NMED. Please acknowledge pre-approval by replying to this request. This additional work in the amount of
$11,942.12 will be added by Change Order to the Contract Documents after receipt of NMED approval. Seven (7) calendar days will be added to the Contract Time.

NOTE: THE CONTRACTOR IS REQUESTING AN IMMEDIATE REPLY TO THIS PRE-APPROVAL REQUEST. THE PAVING SUBCONTRACTOR IS SCHEDULED ON SITE ON AUGUST 3 (MONDAY) TO START THE PAVING WORK. IF AN IMMEDIATE REPLY IS NOT PROVIDED BEFORE 2PM TODAY, TATSCH CONSTRUCTION WILL WITHDRAW THEIR PROPOSAL AND NOT REPLACE THE WASHWATER PIPE.

Please call me if you have any questions regarding this communication.

Angel Campos
Molzen-Corbin & Associates
acampos@molzencorbin.com
(505) 242-5700

This inbound email has been scanned by the MessageLabs Email Security System.

Confidentiality Notice: This e-mail, including all attachments is for the sole use of the intended recipient(s) and may contain confidential and privileged information. Any unauthorized review, use, disclosure or distribution is prohibited unless specifically provided under the New Mexico Inspection of Public Records Act. If you are not the intended recipient, please contact the sender and destroy all copies of this message. -- This email has been scanned by the Sybari - Antigen Email System.

Confidentiality Notice: This e-mail,including all attachments is for the sole use of the intended recipient(s) and may contain confidential and privileged information. Any unauthorized review,use,disclosure or distribution is prohibited unless specifically provided under the New Mexico Inspection of Public Records Act. If you are not the intended recipient, please contact the sender and destroy all copies of this message. -- This email has been scanned by the MessageLabs Email Security System.

Angel Campos

From: Randy Camp [RandallCamp@ruidoso-nm.gov]
Sent: Wednesday, July 29, 2009 10:53 AM
To: Angel Campos
Subject: RE: Ruidoso 1A - CP#24 - Replace Existing Wash Water Line - Request for Pre-Approval

Angel,
On behalf of the Village of Ruidoso, I concur.
Randall Camp

-----Original Message-----
From: Angel Campos [mailto:acampos@molzencorbin.com]
Sent: Wednesday, July 29, 2009 10:42 AM
To: RandallCamp@ruidoso-nm.gov; cordpwd@zianet.com; Sandy.Edens@state.nm.us; williammorris@ruidoso-nm.gov; LisaSanchez@ruidoso-nm.gov
Cc: Del Archuleta; molzencorbin@windstream.net
Subject: Ruidoso 1A - CP#24 - Replace Existing Wash Water Line - Request for Pre-Approval

July 29, 2009

TO: Randall Camp, Village of Ruidoso
Bill Morris, Village of Ruidoso
Cleatus Richards, City of Ruidoso Downs
Sandy Edens, New Mexico Environment Department

RE: Engineer's Review of Change Proposal No. 24
Replace Existing 1-1/2" Washwater Piping at Sludge Beds

A. SCOPE AND JUSTIFICATION: The existing washwater pipe located on the north side of the south sludge beds is in very poor physical condition. Per Bobby Snowden, plant operator, the existing washwater pipe is not reliable and should be replaced. Bobby Snowden confirmed with Randall Camp, Public Works director that that section of pipe should be replaced before the area is paved. The existing 1-1/2" PVC pipe will be replaced with 2" Schedule 80 PVC pipe (approximately 380 feet). In addition, the scope of work includes:
replace three hose bib connections and valves, three new traffic valve boxes, shut off valves, connection fittings, and concrete slab on grade to
protect each of the valve boxes.

B. ENGINEER'S COMMENTS: The Contractor's price proposal itemizes all labor, materials, equipment required to complete the work. The Contractor's price proposal is for a total amount of $11,942.12. The price proposal includes the allowable Contractor markups. We find the price proposal reasonable for the scope of work. A time extension of seven (7) calendar days is requested by the Contractor.

C. SUMMARY - REQUEST FOR APPROVAL BY OWNER AND NEW MEXICO ENVIRONMENT DEPARTMENT: The Engineer is requesting pre-approval of this additional work from the Owner and NMED. Please acknowledge pre-approval by replying to this request. This additional work in the amount of $11,942.12 will be added by Change Order to the Contract Documents after receipt of NMED approval. Seven (7) calendar days will be added to the Contract Time.

NOTE: THE CONTRACTOR IS REQUESTING AN IMMEDIATE REPLY TO THIS PRE-APPROVAL REQUEST. THE PAVING SUBCONTRACTOR IS SCHEDULED ON SITE ON AUGUST 3 (MONDAY) TO START THE PAVING WORK. IF

AN IMMEDIATE REPLY IS NOT PROVIDED BEFORE 2PM TODAY, TATSCH CONSTRUCTION WILL WITHDRAW THEIR PROPOSAL AND NOT REPLACE THE WASHWATER PIPE.

Please call me if you have any questions regarding this communication.

Angel Campos
Molzen-Corbin & Associates
acampos@molzencorbin.com
(505) 242-5700

Angel Campos

From: Cleatus Richards [cordpwd@zianet.com]
Sent: Wednesday, July 29, 2009 11:04 AM
To: Angel Campos
Subject: Re: Ruidoso 1A - CP#24 - Replace Existing Wash Water Line - Request for Pre-Approval

Angel:
I have reviewed change proposal # 24 to replace 1 1/2" wash water line at sludge bed at additional cost of $ 11,942.12 and add 7 calander days to contract time and hereby acknowledge my pre-approval of same.
Cleatus Richards
City of Ruidoso Downs
----- Original Message -----
From: "Angel Campos" <acampos@molzencorbin.com>
To: <cordpwd@zianet.com>
Sent: Wednesday, July 29, 2009 10:46 AM
Subject: FW: Ruidoso 1A - CP#24 - Replace Existing Wash Water Line - Request for Pre-Approval

-----Original Message-----
From: Angel Campos
Sent: Wednesday, July 29, 2009 10:42 AM
To: 'RandallCamp@ruidoso-nm.gov'; 'cordpwd@zianet.com'; 'Sandy.Edens@state.nm.us'; 'williammorris@ruidoso-nm.gov'; 'LisaSanchez@ruidoso-nm.gov'
Cc: Del Archuleta; 'molzencorbin@windstream.net'
Subject: Ruidoso 1A - CP#24 - Replace Existing Wash Water Line - Request for Pre-Approval

July 29, 2009

TO: Randall Camp, Village of Ruidoso
Bill Morris, Village of Ruidoso
Cleatus Richards, City of Ruidoso Downs
Sandy Edens, New Mexico Environment Department

RE: Engineer's Review of Change Proposal No. 24
Replace Existing 1-1/2" Washwater Piping at Sludge Beds

A. SCOPE AND JUSTIFICATION: The existing washwater pipe located on the north side of the south sludge beds is in very poor physical condition. Per Bobby Snowden, plant operator, the existing washwater pipe is not reliable and should be replaced. Bobby Snowden confirmed with Randall Camp, Public Works director that that section of pipe should be replaced before the area is paved. The existing 1-1/2" PVC pipe will be replaced with 2" Schedule 80 PVC pipe (approximately 380 feet). In addition, the scope of work includes:
replace three hose bib connections and valves, three new traffic valve boxes, shut off valves, connection fittings, and concrete slab on grade to protect each of the valve boxes.

B. ENGINEER'S COMMENTS: The Contractor's price proposal itemizes all labor, materials, equipment required to complete the work. The Contractor's price proposal is for a total amount of $11,942.12. The price proposal includes the allowable Contractor markups. We find the price proposal reasonable for the scope of work. A time extension of seven (7) calendar days is requested by the Contractor.

C. SUMMARY - REQUEST FOR APPROVAL BY OWNER AND NEW MEXICO ENVIRONMENT DEPARTMENT: The Engineer is requesting pre-approval of this additional work from the Owner and NMED. Please acknowledge pre-approval by replying to this request. This additional work in the amount of $11,942.12 will be added by Change Order to the Contract Documents after receipt of NMED approval. Seven (7) calendar days will be added to the Contract Time.

NOTE: THE CONTRACTOR IS REQUESTING AN IMMEDIATE REPLY TO THIS PRE-APPROVAL REQUEST. THE PAVING SUBCONTRACTOR IS SCHEDULED ON SITE ON AUGUST 3 (MONDAY) TO START THE PAVING WORK. IF AN IMMEDIATE REPLY IS NOT PROVIDED BEFORE 2PM TODAY, TATSCH CONSTRUCTION WILL WITHDRAW THEIR PROPOSAL AND NOT REPLACE THE WASHWATER PIPE.

Please call me if you have any questions regarding this communication.

Angel Campos
Molzen-Corbin & Associates
acampos@molzencorbin.com
(505) 242-5700

EXHIBIT 5

CHANGE PROPOSAL NO. 25

INCLUDES:

1) **Notice to Proceed Based on Pre-Approvals Received From Owner and NMED with Contractor's Change Proposal No. 25**

2) **NMED Pre-Approval Dated August 27, 2009**

3) **Village of Ruidoso Pre-Approval Dated August 19, 2009**

4) **Ruidoso Downs Pre-Approval Dated August 19, 2009**

Angel Campos

To: Richard A.Rogers
Cc: RandallCamp@ruidoso-nm.gov; 'Cleatus Richards'; LisaSanchez@ruidoso-nm.gov; Sandy.Edens@state.nm.us
Subject: Ruidoso 1A - CP#25 - 4" Plug Valve on GBT Inlet Line - Notice to Proceed

August 21, 2009

This is to inform Tatsch Construction that the Village of Ruidoso and City of Ruidoso Downs have pre-approved this additional work. Formal approval has not been received from NMED. The Owner anticipated approval forthcoming from NMED. Based on the pre-approvals from the Owner, the Owner authorizes Tatsch Construction to proceed with this additional work.

Angel Campos
Molzen-Corbin & Associates
acampos@molzencorbin.com
(505) 242-5700

-----Original Message-----
From: Randy Camp [mailto:RandallCamp@ruidoso-nm.gov]
Sent: Wednesday, August 19, 2009 11:56 AM
To: Angel Campos
Subject: RE: Ruidoso 1A - CP#25 - 4" Plug Valve on GBT Inlet Line - Request for Pre-Approval

On behalf of the Village of Ruidoso, I concur and approve of this Change Proposal.
Randall Camp
Village of Ruidoso

-----Original Message-----
From: Angel Campos [mailto:acampos@molzencorbin.com]
Sent: Wednesday, August 19, 2009 7:52 AM
To: RandallCamp@ruidoso-nm.gov; 'Cleatus Richards'; williammorris@ruidoso-nm.gov; Sandy.Edens@state.nm.us; LisaSanchez@ruidoso-nm.gov; BobbySnowden@ruidoso-nm.gov
Cc: molzencorbin@windstream.net; Del Archuleta; Chuck Spinello
Subject: Ruidoso 1A - CP#25 - 4" Plug Valve on GBT Inlet Line - Request for Pre-Approval

August 19, 2009

TO: Randall Camp, Village of Ruidoso
Bill Morris, Village of Ruidoso
Cleatus Richards, City of Ruidoso Downs
Sandy Edens, New Mexico Environment Department

RE: Engineer's Review of Change Proposal No. 25
Install 4" Plug Valve on Gravity Belt Thickener Inlet Line

A. SCOPE AND JUSTIFICATION: A 4" bypass line was constructed around the gravity belt thickener (GBT). The purpose of the bypass line is to pump waste activated sludge (WAS) directly into the digester without thickening if needed. In addition, this bypass line will

be used to pump WAS from the existing digester to the new digester for the startup of the new digester.
A shut off valve is needed between the bypass line and the GBT. Otherwise WAS will flow into the GBT and the bypass line at the same time. The shut off valve is needed to use the 4" bypass line. The attached photo shows where to install the new 4" plug valve. This scope of work includes removing the polymer mixer, installing a new valve and re-installing the polymer mixer below the new valve.

B. ENGINEER'S COMMENTS: The Contractor's price proposal itemizes all labor, materials, equipment required to complete the work. The Contractor's price proposal is for a total amount of $1,447.73. The price proposal includes the allowable Contractor markups. Material cost is 65% of the price proposal and labor cost is 27% of the price proposal. We find the price proposal reasonable for the scope of work. A time extension of three (3) calendar days is requested by the Contractor.

C. SUMMARY - REQUEST FOR APPROVAL BY OWNER AND NEW MEXICO ENVIRONMENT DEPARTMENT: The Engineer is requesting pre-approval of this additional work from the Owner and NMED. Please acknowledge pre-approval by replying to this request. This additional work in the amount of $1,447.73 will be added by Change Order to the Contract Documents after receipt of NMED approval.
Three (3) calendar days will be added to the Contract Time.

NOTE: THE CONTRACTOR IS REQUESTING AN IMMEDIATE REPLY TO THIS PRE-APPROVAL REQUEST.

Please call me if you have any questions regarding this communication.

Angel Campos
Molzen-Corbin & Associates
acampos@molzencorbin.com
(505) 242-5700

Tatsch Construction, Inc.

GENERAL CONTRACTORS
Licenses: NM 15206, AZ 074121 & 074122

208 Highway 180 West
Silver City, NM 88061
Phone: 575-538-3704 Fax: 575-538-2552
www.tatschconstruction.com

18-August-2009

To: Angel Campos
Molzen-Corbin & Associates
2701 Miles Road, S.E.
Albuquerque, NM 87106

Re: **Change Proposal No. 25**
Phase 1A - Sludge Handling and Ultraviolet Disinfection Facilities

RFP: **A. Campos e-mail dated 12 August 2009**

Description: **Add 4" flanged plug valve w/ handwheel operator prior to polymer injection assembly at Gravity Belt Thickener.**

Excludes: **Chainwheel valve operator.**

General Work:	Tatsch Construction Inc.			1,154.00	
	Bond Premium	1.448 M	$6.00	8.69	
	Subcontract Bond Premium	0.100 M	$25.00	2.50	
	Builders Risk Insurance	14.477 C	$0.0873	1.26	
	Owner-Contractor Protective Insurance	1.448 M	$0.7850	1.14	
			Subtotal	1,167.59	
		Fee		175.14	
			Subtotal		1,342.73
Subcontracts:	Bogan Brothers			100.00	
			Subtotal	100.00	
		Fee on Subcontracts		5.00	
			Subtotal		105.00
			Total This Change Proposal		**$1,447.73**

Additional contract time in the amount of three **(3) calendar days** will be required for this work.
This proposal is offered **for written acceptance by the Owner no later than 19 August 2009** and is thereafter **withdrawn.**

Submitted by: Richard A. Rogers, Vice President

Item	Description	Location	Takeoff Qty			W%	Conversion		Order Qty		Unit Price	Amount
CP#25												
2015.00	**Mechanical Demolition**											
st 4	4" DI Pipe Removal		4.00	LnFt	Lab		22.00000	LnFt/mh	0.18	mh	37.253	7
					Eqp		44.00000	LnFt/hr	0.09	hr	62.500	6
	Mechanical Demolition											12
	0.182 Labor hours											
	0.091 Equipment hours											
15031.04	**4" Ductile Iron Pipe**											
fezm	4" MegaFlange Adapter		1.00	Each	Mat	0			1.00	Each	72.29	72
flg	4" Flanged Connection		7.00	Each	Lab		0.54450	mh/Each	3.81	mh	35.69	136
lfea	4" Pipe Instal'n (lnft)		3.00	LnFt	Lab		4.94730	LnFt/mh	0.61	mh	35.69	22
					Eqp		89.28571	LnFt/hr	0.03	hr	66.463	2
mj	4" M.J. End Connection		1.00	Each	Lab		0.68252	mh/Each	0.68	mh	35.69	24
	4" Ductile Iron Pipe											257
	5.100 Labor hours											
	0.034 Equipment hours											
15061.01	**1" I.P.S. PVC Pipe**											
0179	1" Sch. 80 PVC Pipe		2.00	LnFt	Mat	0			2.00	LnFt	1.20	2
lnft	1" PVC Pipe Installation		5.00	lnft	Lab		3.96825	lnft/mh	1.26	mh	35.69	45
sw	1" Solvent Weld Pipe Connection		5.00	each	Lab		0.14000	mh/each	0.70	mh	35.69	25
					Mat				5.00	each	0.10	1
	1" I.P.S. PVC Pipe											73
	1.960 Labor hours											
15061.a4	**1/2" I.P.S. PVC Pipe**											
thd	1/2" Make-up Threaded Connection		1.00	Each	Lab		11.45000	Each/mh	0.09	mh	35.69	3
	1/2" I.P.S. PVC Pipe											3
	0.09 Labor hours											
15062.01	**1" Sch.80 PVC Fittings**											
9s	1" 90 Ell (SxS) Sch.80 PVC		2.00	Each	Mat	0			2.00	Each	4.56	9
am	1" Male Adapter (SxMpt) Sch.80 PVC		1.00	Each	Mat	0			1.00	Each	3.88	4
	1" Sch.80 PVC Fittings											13
15095.04	**4" Bolts & Gaskets**											
bf	4" Bolt Set (5/8"-11 x 3" Gr.2 zinc pl. bolts w/ nuts)		1.00	Each	Mat		8.00000	Bolt/Each	8.00	Bolt	1.15	9
sbr	4" 150# F.F. Rubber Gasket x 1/8"		4.00	Each	Mat				4.00	Each	2.42	10
	4" Bolts & Gaskets											19
15100.04	**4" Valve Installation**											
v	4" Valve (labor only)		1.00	Each	Lab		1.20000	mh/Each	1.20	mh	35.69	43
					Eqp		0.26667	hr/Each	0.27	hr	66.463	18
	4" Valve Installation											61
	1.20 Labor hours											
	0.27 Equipment hours											
15110.04	**4" Plug Valves**											
fw	4" Flg. Plug Valve w/Handwheel Op.		1.00	Each	Mat				1.00	Each	634.00	634
					Oth				1.00	Each	75.00	75
	4" Plug Valves											709
15190.00	**Mechanical Identification**											
tag	Valve Tags		1.00	Each	Lab		10.00000	Each/mh	0.10	mh	37.48	4
					Mat				1.00	Each	4.00	4

Item	Description	Location	Takeoff Qty	W%	Conversion	Order Qty	Unit Price	Amount
	Mechanical Identification							
	0.10 Labor hours							8
	CP#25							*1,154*
	8.63 Labor hours							
	0.391 Equipment hours							

Partial Totals

Description	Amount	Cuts/Adds	Net Amount	Totals	Hours	Rate	C Cost per Unit	rcent of Total	
Labor	308		308		8.630 hrs			26.73%	
Material	745		745					64.56%	
Subcontract									
Equipment	26		26		0.391 hrs			2.22%	
Other	75		75					6.50%	
	1,154			1,154				100.00	100.00%
Partial Total				*1,154*					

www.sartellvalves.com

Hennesy Equipment Sales Quotation

SARTELL Valves, Inc.
DeZURIK Water Controls | SARTELL Valves & Controls

To: Richard Rogers
Tatsch Construction

Reference: Ruidoso WWTP

Terms: Net 30 Days

FOB: Factory - Sartell, MN

Valid For: 30 Days

Delivery: Stock

Date of Quote: August 18, 2009
Quote: JW090818TC

Industry: 4960 - Underground Water Distribut

Mail Order To: Hennesy Equipment Sales
4346 N. 7th. Ave
Phoenix,AZ 85013
Phone: 602-277-7268

Prepared by: Joe Weglarz
Sales Representative

ANY PURCHASE ORDER ISSUED AS A RESULT OF THIS QUOTATION IS SUBJECT TO ALL OF THE MANUFACTURER'S CONDITIONS, REASONABLE CONTRACT LANGUAGE NEGOTIATIONS AND FINAL ACCEPTANCE BY HENNESY EQUIPMENT SALES

Item/Tag #	Qty	Order Code	Unit Price ($)	Total Price ($)
1	1	4" Plug Valve w/Handwheel PEC,4,F1,CI,NBR,CIIR,1304A0*GS-6-HD8	$634.00	$634.00
	PEC	**DEZURIK WATER CONTROLS Eccentric Plug Valve, Rectangular Port**		
	4	Size: 4 Inch (Standard Port), Stainless Steel Bearings, Welded-In Nickel Seat		
	F1	End Connection: Flanged, Drilled to ANSI Class 125/150		
	CI	Body Material: Cast Iron, ASTM A126, Class B		
	NBR	Packing: Acryionitrile-Butadiene Reinforced, Multiple V-Ring with External Adjustment, -20 to 250 Degree F.		
	CIIR	Plug Facing: Chloro-Isobutene-Isoprene; -20 to 250°F		
	1304A0	Option: 8 mils min. of Blue Epoxy Tnemec 141 (NSF Std. 61) on Interior w/Std (SP10) surface prep and 2 mils min. of Blue Enamel on Exterior w/Std (SP10) surface prep		
	GS-6-HD8	Act Type: G-Series Gear with Handwheel Operator		

Unless Specified Above No Further Options Are Included

In The Event Of Order Address PO To Hennesy Equipment Sales

700 Rankin Rd., NE
Albuquerque, New Mexico 87107
Phone: (505) 898-8000
Fax: (505) 898-1289

Bogan Brothers Painting Co. Inc.

Fax

To:	Tatsch Construction, Inc. - Richard	**From:**	Joe Garcia
Fax:	(575) 538-2552	**Pages:**	1
Phone:	(575) 538-3704	**Date:**	8/18/2009
Re:	Ruidoso WWTP	**CC:**	

☐ **Urgent** ☐ **For Review** ☐ **Please Comment** ☐ **Please Reply** ☐ **Please Recycle**

Richard,

The price for repainting 3lf of 4" DIP pipe and one 4" valve: $100.00

Thanks,

REMOVE POLYMER MIXER AND INSTALL NEW 4" PLUG VALVE BELOW 90 DEGREE BEND. INSTALL POLYMER MIXER BELOW NEW PLUG VALVE.

NOTE: THE CONTRACTOR IS REQUESTING AN IMMEDIATE REPLY TO THIS PRE-APPROVAL REQUEST.

Please call me if you have any questions regarding this communication.

Angel Campos
Molzen-Corbin & Associates
acampos@molzencorbin.com
(505) 242-5700

Angel Campos

From: Cleatus Richards [cordpwd@zianet.com]
Sent: Wednesday, August 19, 2009 10:36 AM
To: Angel Campos
Subject: Re: Ruidoso 1A - CP#25 - 4" Plug Valve on GBT Inlet Line - Request for Pre-Approval

Angel:
I have reviewed change proposal # 25 to install 4" plug valve on gravity belt thickener inlet line at additional cost of $ 1,447.73 and add 3 calendar days to contract time and hereby acknowledge my pre-approval of same.
Cleatus Richards
City of RTuidoso Downs
----- Original Message -----
From: "Angel Campos" <acampos@molzencorbin.com>
To: <RandallCamp@ruidoso-nm.gov>; "'Cleatus Richards'" <cordpwd@zianet.com>; <williammorris@ruidoso-nm.gov>; <Sandy.Edens@state.nm.us>; <LisaSanchez@ruidoso-nm.gov>; <BobbySnowden@ruidoso-nm.gov>
Cc: <molzencorbin@windstream.net>; "Del Archuleta" <darchuleta@molzencorbin.com>; "Chuck Spinello" <cspinello@molzencorbin.com>
Sent: Wednesday, August 19, 2009 7:51 AM
Subject: Ruidoso 1A - CP#25 - 4" Plug Valve on GBT Inlet Line - Request for Pre-Approval

August 19, 2009

TO: Randall Camp, Village of Ruidoso
Bill Morris, Village of Ruidoso
Cleatus Richards, City of Ruidoso Downs
Sandy Edens, New Mexico Environment Department

RE: Engineer's Review of Change Proposal No. 25
Install 4" Plug Valve on Gravity Belt Thickener Inlet Line

A. SCOPE AND JUSTIFICATION: A 4" bypass line was constructed around the gravity belt thickener (GBT). The purpose of the bypass line is to pump waste activated sludge (WAS) directly into the digester without thickening if needed. In addition, this bypass line will be used to pump WAS from the existing digester to the new digester for the startup of the new digester.
A shut off valve is needed between the bypass line and the GBT. Otherwise WAS will flow into the GBT and the bypass line at the same time. The shut off valve is needed to use the 4" bypass line. The attached photo shows where to install the new 4" plug valve. This scope of work includes removing the polymer mixer, installing a new valve and re-installing the polymer mixer below the new valve.

B. ENGINEER'S COMMENTS: The Contractor's price proposal itemizes all labor, materials, equipment required to complete the work. The Contractor's price proposal is for a total amount of $1,447.73. The price proposal includes the allowable Contractor markups. Material cost is 65% of the price proposal and labor cost is 27% of the price proposal. We find the price proposal reasonable for the scope of work. A time extension of three (3) calendar days is requested by the Contractor.

C. SUMMARY - REQUEST FOR APPROVAL BY OWNER AND NEW MEXICO ENVIRONMENT

DEPARTMENT: The Engineer is requesting pre-approval of this additional work from the Owner and NMED. Please acknowledge pre-approval by replying to this request. This additional work in the amount of $1,447.73 will be added by Change Order to the Contract Documents after receipt of NMED approval.
Three (3) calendar days will be added to the Contract Time.

NOTE: THE CONTRACTOR IS REQUESTING AN IMMEDIATE REPLY TO THIS PRE-APPROVAL REQUEST.

Please call me if you have any questions regarding this communication.

Angel Campos
Molzen-Corbin & Associates
acampos@molzencorbin.com
(505) 242-5700

EXHIBIT 6

CHANGE PROPOSAL NO. 26

INCLUDES:

1) **Notice to Proceed Based on Pre-Approvals Received From Owner and NMED with Contractor's Change Proposal No. 26**

2) **NMED Pre-Approval Dated September 24, 2009**

3) **Village of Ruidoso Pre-Approval Dated September 24, 2009**

4) **Ruidoso Downs Pre-Approval Dated September 25, 2009**

Angel Campos

To: 'Richard A.Rogers'; Miguel Chandler
Cc: RandallCamp@ruidoso-nm.gov; cordpwd@zianet.com; EdensJr, Walter, NMENV; williammorris@ruidoso-nm.gov; LisaSanchez@ruidoso-nm.gov; Del Archuleta
Subject: Ruidoso 1A - CP#26 - Add Cover Plates at Digester - Notice to Proceed
Attachments: CP#26 rev1 - Add Digester Slide Gate Covers.pdf

September 25, 2009

TO: Tatsch Construction, Inc

RE: Change Proposal No. 26 - Add Cover Plates at Digester
Notice to Proceed

This is to inform Tatsch Construction that the Village of Ruidoso, City of Ruidoso Downs and the New Mexico Environment Department have pre-approved this additional work. Based on these pre-approvals, Tatsch Construction to proceed with this additional work.

Angel Campos
Molzen-Corbin & Associates
acampos@molzencorbin.com
(505) 242-5700

-----Original Message-----
From: Angel Campos
Sent: Thursday, September 24, 2009 4:02 PM
To: 'RandallCamp@ruidoso-nm.gov'; cordpwd@zianet.com; 'williammorris@ruidoso-nm.gov'; 'Sandy.Edens@state.nm.us'; 'LisaSanchez@ruidoso-nm.gov'
Cc: Del Archuleta; molzencorbin@windstream.net; Chuck Spinello
Subject: Ruidoso 1A - CP#26 - Add Cover Plates at Digester - Request for Pre-Approval

September 24, 2009

TO: Randall Camp, Village of Ruidoso
Bill Morris, Village of Ruidoso
Cleatus Richards, City of Ruidoso Downs
Sandy Edens, New Mexico Environment Department

RE: Engineer's Review of Change Proposal No. 26
Add Cover Plates at Digester

A. SCOPE AND JUSTIFICATION: The digester cells include four vertical slide plates to control flow between adjacent cells. The digester cells are covered and have cutouts for these four slide plates. The cutout openings for the slide plates are about 10" wide x 30" long. The digester cells are 25 feet deep. The openings are large enough that an operator can step into the opening. At two of the locations, a person could fall into the tank. The new cover plates over the slide plates are needed to address this safely issue.

B. ENGINEER'S COMMENTS: The Contractor's price proposal itemizes all labor, materials, and equipment required to complete this work. The Contractor's price proposal is for a total

Tatsch Construction, Inc.

General Contractors
Licenses: NM 15206, AZ 074121 & 074122

208 Highway 180 West
Silver City, NM 88061
Phone: 575-538-3704 Fax: 575-538-2552
www.tatschconstruction.com

24-September-2009

To: Angel Campos
Molzen-Corbin & Associates
2701 Miles Road, S.E.
Albuquerque, NM 87106

Re: **Change Proposal No. 26 rev. 1**
Phase 1A - Sludge Handling and Ultraviolet Disinfection Facilities

RFP: **A. Campos e-mail dated 13 August 2009**

Description: **Add four checkered plate covers to the existing slide gate locations atop the Digester.**

Excludes:

General Work: Tatsch Construction Inc.				961.00	
Bond Premium	1.115 M		$6.00	6.69	
Subcontract Bond Premium	0.000 M		$25.00	0.00	
Builders Risk Insurance	11.150 C		$0.0873	0.97	
Owner-Contractor Protective Insurance	1.115 M		$0.7850	0.88	
			Subtotal	969.54	
		Fee		145.43	
			Subtotal		1,114.97
Subcontracts: None				0.00	
			Subtotal	0.00	
		Fee on Subcontracts		0.00	
			Subtotal		0.00
			Total This Change Proposal		**$1,114.97**

Additional contract time in the amount of one **(1) calendar days** will be required for this work.
This proposal is offered **for written acceptance by the Owner no later than 2 October 2009** and is thereafter **withdrawn.**

Richard A. Rogers

Submitted by: Richard A. Rogers, Vice President

Angel Campos

From: Randy Camp [RandallCamp@ruidoso-nm.gov]
Sent: Thursday, September 24, 2009 4:10 PM
To: Angel Campos
Subject: RE: Ruidoso 1A - CP#26 - Add Cover Plates at Digester - Request for Pre-Approval

Angel,
On behalf of the Village of Ruidoso, I concur with this Change Proposal.
Randall Camp
Public Works Director
Village of Ruidoso

-----Original Message-----
From: Angel Campos [mailto:acampos@molzencorbin.com]
Sent: Thursday, September 24, 2009 4:02 PM
To: RandallCamp@ruidoso-nm.gov; cordpwd@zianet.com; williammorris@ruidoso-nm.gov; Sandy.Edens@state.nm.us; LisaSanchez@ruidoso-nm.gov
Cc: Del Archuleta; molzencorbin@windstream.net; Chuck Spinello
Subject: Ruidoso 1A - CP#26 - Add Cover Plates at Digester - Request for Pre-Approval

September 24, 2009

TO: Randall Camp, Village of Ruidoso
Bill Morris, Village of Ruidoso
Cleatus Richards, City of Ruidoso Downs
Sandy Edens, New Mexico Environment Department

RE: Engineer's Review of Change Proposal No. 26
Add Cover Plates at Digester

A. SCOPE AND JUSTIFICATION: The digester cells include four vertical slide plates to control flow between adjacent cells. The digester cells are covered and have cutouts for these four slide plates. The cutout openings for the slide plates are about 10" wide x 30" long. The digester cells are
25 feet deep. The openings are large enough that an operator can step into the opening. At two of the locations, a person could fall into the tank.
The new cover plates over the slide plates are needed to address this safely issue.

B. ENGINEER'S COMMENTS: The Contractor's price proposal itemizes all labor, materials, and equipment required to complete this work. The Contractor's price proposal is for a total amount of $1,114.97. The price proposal includes the allowable Contractor markup. Material cost represents 59% of the total cost and the balance is for labor and equipment costs. We find the price proposal reasonable for the scope of work. A time extension of one (1) calendar day is requested by the Contractor.

C. SUMMARY - REQUEST FOR APPROVAL BY OWNER AND NEW MEXICO ENVIRONMENT DEPARTMENT: The Engineer is requesting pre-approval of this additional work from the Owner and NMED. Please acknowledge pre-approval by replying to this request. This additional work in the amount of $1,114,97 will be added by Change Order to the Contract Documents after receipt of NMED approval.
One (1) calendar days will be added to the Contract Time.

NOTE: THE CONTRACTOR IS REQUESTING APPROVAL NOTIFICATION NO LATER THAN OCTOBER 2, 2009. YOUR IMMEDIATE REPLY TO THIS PRE-APPROVAL REQUEST IS APPRECIATED.

Please call me if you have any questions regarding this communication.

Angel Campos
Molzen-Corbin & Associates
acampos@molzencorbin.com
(505) 242-5700

Angel Campos

From: Cleatus Richards [cordpwd@zianet.com]
Sent: Friday, September 25, 2009 9:54 AM
To: Angel Campos
Subject: Re: Ruidoso 1A - CP#26 - Add Cover Plates at Digester - Request for Pre-Approval

Angel:
I have reviewed change proposal # 26 to add cover plates at digester at additional cost of 4 1,114.97 and add one day to contract time and hereby acknowledge my pre-approval of same.
Cleatus Richards
City of Ruidoso Downs
----- Original Message -----
From: "Angel Campos" <acampos@molzencorbin.com>
To: <RandallCamp@ruidoso-nm.gov>; <cordpwd@zianet.com>; <williammorris@ruidoso-nm.gov>; <Sandy.Edens@state.nm.us>; <LisaSanchez@ruidoso-nm.gov>
Cc: "Del Archuleta" <darchuleta@molzencorbin.com>; <molzencorbin@windstream.net>; "Chuck Spinello" <cspinello@molzencorbin.com>
Sent: Thursday, September 24, 2009 4:01 PM
Subject: Ruidoso 1A - CP#26 - Add Cover Plates at Digester - Request for Pre-Approval

September 24, 2009

TO: Randall Camp, Village of Ruidoso
Bill Morris, Village of Ruidoso
Cleatus Richards, City of Ruidoso Downs
Sandy Edens, New Mexico Environment Department

RE: Engineer's Review of Change Proposal No. 26
Add Cover Plates at Digester

A. SCOPE AND JUSTIFICATION: The digester cells include four vertical slide plates to control flow between adjacent cells. The digester cells are covered and have cutouts for these four slide plates. The cutout openings for the slide plates are about 10" wide x 30" long. The digester cells are
25 feet deep. The openings are large enough that an operator can step into the opening. At two of the locations, a person could fall into the tank.
The new cover plates over the slide plates are needed to address this safely issue.

B. ENGINEER'S COMMENTS: The Contractor's price proposal itemizes all labor, materials, and equipment required to complete this work. The Contractor's price proposal is for a total amount of $1,114.97. The price proposal includes the allowable Contractor markup. Material cost represents 59% of the total cost and the balance is for labor and equipment costs. We find the price proposal reasonable for the scope of work. A time extension of one (1) calendar day is requested by the Contractor.

C. SUMMARY - REQUEST FOR APPROVAL BY OWNER AND NEW MEXICO ENVIRONMENT DEPARTMENT: The Engineer is requesting pre-approval of this additional work from the Owner and NMED. Please acknowledge pre-approval by replying to this request. This additional work in the amount of $1,114,97 will be added by Change Order to the Contract Documents after receipt of NMED approval.
One (1) calendar days will be added to the Contract Time.

NOTE: THE CONTRACTOR IS REQUESTING APPROVAL NOTIFICATION NO LATER THAN OCTOBER 2, 2009. YOUR IMMEDIATE REPLY TO THIS PRE-APPROVAL REQUEST IS APPRECIATED.

Please call me if you have any questions regarding this communication.

Angel Campos
Molzen-Corbin & Associates
acampos@molzencorbin.com
(505) 242-5700

EXHIBIT 7

CHANGE PROPOSAL NO. 27

INCLUDES:

1) **Notice to Proceed Based on Pre-Approvals Received From Owner and NMED with Contractor's Change Proposal No. 27**

2) **NMED Pre-Approval Dated September 30, 2009**

3) **Village of Ruidoso Pre-Approval Dated September 28, 2009**

4) **Ruidoso Downs Pre-Approval Dated September 28, 2009**

Angel Campos

To: 'Richard A.Rogers'; Miguel Chandler
Cc: 'Randall Camp'; cordpwd@zianet.com; WilliamMorris@ruidoso-nm.gov; molzencorbin@windstream.net; Del Archuleta
Subject: Ruidoso Phase 1A - CP#27 - Relocate One Propane Tank - Notice to Proceed
Attachments: Propane Tanks Layout Drawing.pdf; CP#27 rev2 - Relocate 1 Propane Tank.pdf

September 30, 2009

To: Richard Rogers, Tatsch Construction, Inc

RE: Engineer's Review of Change Proposal No. 27
Relocate One Propane Tank
Notice to Proceed

This is to inform Tatsch Construction that the Village of Ruidoso, City of Ruidoso Downs, and the New Mexico Environment Department have pre-approved Change Proposal No. 27 summarized in the Contractor's proposal dated September 25, 2009. By receipt of these pre-approvals, Tatsch Construction is authorized to proceed with this change proposal for the amount of $9,188.67. This additional work includes a time extension of twenty-eight (28) calendar days. This change proposal will be added to the Contract by the Change Order provisions of the Contract Documents and will be included in the next formal Change Order to the Contract.

Please call me, should you have any questions regarding this communication.

Sincerely,

Angel Campos
Molzen-Corbin & Associates
acampos@molzencorbin.com
(505) 242-5700

From: Angel Campos
Sent: Monday, September 28, 2009 9:52 AM
To: 'RandallCamp@ruidoso-nm.gov'; cordpwd@zianet.com; 'EdensJr, Walter, NMENV'; 'williammorris@ruidoso-nm.gov'; 'LisaSanchez@ruidoso-nm.gov'
Cc: Del Archuleta; molzencorbin@windstream.net; Ken Muller
Subject: Ruidoso Phase 1A - CP#27 - Relocate One Propane Tank

September 28, 2009

TO: Randall Camp, Village of Ruidoso
Bill Morris, Village of Ruidoso
Cleatus Richards, City of Ruidoso Downs
Sandy Edens, New Mexico Environment Department

RE: Engineer's Review of Change Proposal No. 27
Relocate One Propane Tank

A. SCOPE AND JUSTIFICATION: The design drawings show the installation of two parallel propane tanks located between the new building and the new digester (Drawing W30-101). The treatment plant site is very congested with existing treatment structures and with limited space to construct the new facilities over the existing sludge drying beds.

We were informed that with the distance between the new building and the new digester, only one propane tank can be placed at this location. The second tank would have to be located elsewhere to comply with the LP Gas Code Requirements. The attached Propane Tanks Layout Drawing shows the new location for the second tank. The scope for this work includes:

1. Construct reinforced slab for propane tank, including associated structural earthwork foundation.
2. Install buried gas piping to building.
3. Install gas piping in building.
4. Paint exposed gas piping in building.

B. ENGINEER'S COMMENTS: The Contractor's initial price proposal was for the amount of $12,408.88. Several items were negotiated and adjusted. The Contractor's estimate was reduced by $3,220 resulting from adjustments to the Plumber's estimate and the Contractor's estimate. The revised price proposal is for the amount of $9,188.67 and includes subcontractor's costs, labor, materials, and equipment costs required to complete this work. The revised price proposal includes the allowable Contractor markups. We find the revised price proposal reasonable for the scope of work.

C. TIME EXTENSION: As noted on the price proposal, a twenty-eight (28) calendar date time extension is requested. The Contractor's justification is presented below:

1. Seven days due to work the Contractor could have completed had this issue not arisen (i.e. testing heaters, tank inspection, filling tanks).
2. Seven days for processing of the change proposal.
3. Fourteen days for completing the work associated with relocating the second propane tank.

We concur with the Contractor's time extension request and justification.

D. SUMMARY - REQUEST FOR APPROVAL BY OWNER AND NEW MEXICO ENVIRONMENT DEPARTMENT: The Engineer is requesting pre-approval of this additional work from the Owner and NMED. Please acknowledge pre-approval by replying to this request. This additional work in the amount of $9,188.67 will be added by Change Order to the Contract Documents after receipt of NMED approval. Twenty-eight (28) calendar days will be added to the Contract Time.

NOTE: THE CONTRACTOR IS REQUESTING APPROVAL NOTIFICATION NO LATER THAN OCTOBER 2, 2009. YOUR IMMEDIATE REPLY TO THIS PRE-APPROVAL REQUEST IS APPRECIATED.

Please call me if you have any questions regarding this communication.

Angel Campos
Molzen-Corbin & Associates
acampos@molzencorbin.com
(505) 242-5700

Tatsch Construction, Inc.

General Contractors
Licenses: NM 15206, AZ 074121 & 074122

208 Highway 180 West
Silver City, NM 88061
Phone: 575-538-3704 Fax: 575-538-2552
www.tatschconstruction.com

25-September-2009

To: Angel Campos
Molzen-Corbin & Associates
2701 Miles Road, S.E.
Albuquerque, NM 87106

Re: **Change Proposal No. 27 rev. 2**
Phase 1A - Sludge Handling and Ultraviolet Disinfection Facilities

RFP: **A. Campos e-mail dated 3 September 2009**

Description: **Relocate one propane tank as shown on drawing W30-101CH sheet 9/03/09.**

Excludes:

General Work:	Tatsch Construction Inc.			3,919.00	
	Bond Premium	9.189 M	$6.00	55.13	
	Subcontract Bond Premium	3.856 M	$25.00	96.40	
	Builders Risk Insurance	91.887 C	$0.0873	8.02	
	Owner-Contractor Protective Insurance	9.189 M	$0.7850	7.21	
			Subtotal	4,085.76	
		Fee		612.86	
			Subtotal		4,698.62
Subcontracts:	Polson & Grady			3,856.24	
	Bogan Brothers			420.00	
			Subtotal	4,276.24	
		Fee on Subcontracts		213.81	
			Subtotal		4,490.05
			Total This Change Proposal		**$9,188.67**

We are requesting additional contract time due to the following: seven days due to work we could have completed had this issue not arisen (i.e. testing of heaters, tank inspection, filling tanks), seven days for processing of the change proposal, and 14 days for implementation of the solution requested by the Engineer.

Additional contract time in the amount of twenty eight **(28) calendar days** will be required for this work.
This proposal is offered **for written acceptance by the Owner no later than 2 October 2009** and is thereafter **withdrawn.**

Richard A. Rogers

Submitted by: Richard A. Rogers, Vice President

Standard Estimate Report

Ruidoso 1A - Change Order

CP#27

Item	Description	Takeoff Qty		Labor Amount	Material Amount	Equipment Amount	Other Amount	Total Amount
1200.00	**Supervision**							
1000	Superintendent	0.23	Mo	1,595	-	-	-	1,595
	Supervision			1,595				1,595
	39.87 Labor hours							
1230.00	**Out of Town Expenses**							
5000	Housing Rent Expense	0.23	Mo	-	-	-	184	184
	Out of Town Expenses						184	184
1450.00	**Layout**							
2000	Site Layout Lines	3.00	Line	329	17	-	3	348
	Layout			329	17		3	348
	10.50 Labor hours							
1501.00	**Temp. Electricity**							
5010	Temp. Elec. Monthly Useage	0.23	Mo	-	-	-	35	35
	Temp. Electricity						35	35
1502.00	**Temp. Telephone**							
5010	Temp. Telephone Service	0.23	Mo	-	-	-	23	23
cell	Cellular Telephone Service	0.23	Mo	-	-	-	22	22
	Temp. Telephone						45	45
1503.00	**Temp. Water**							
5010	Temp. Water Monthly Useage	0.23	Mo	-	-	-	23	23
	Temp. Water						23	23
1504.00	**Temp. Toilet**							
5000	Temp. Toilet Facilities (1 pair)	0.23	Mo	-	-	-	41	41
	Temp. Toilet						41	41
1520.00	**Temp. Jobsite Office**							
5000	Temp. Job Office Rent	0.23	Mo	-	-	-	35	35
	Temp. Jobsite Office						35	35
1525.00	**Temp Jobsite Storage**							

Item		Description	Takeoff Qty		Labor Amount	Material Amount	Equipment Amount	Other Amount	Total Amount
1525.00		**Temp Jobsite Storage**							
	5000	Temp. Jobsite Storage	-0.23	Mo	-	-	-	(28)	(28)
		Temp Jobsite Storage						(28)	(28)
1700.00		**Final Cleanup**							
	30	30 Cuyd Dumpster Pull	0.46	Each	-	-	-	232	232
	5000	Final Cleanup Expense	80.00	SqFt	-	-	-	32	32
	Leed MR 2.1 75%	Construction Waste Management - 75%s	1.00	sqft	-	-	-	0	0
		Final Cleanup						264	264
2235.00		**Fine Grade for Slabs**							
	fg	Fine Grade Slabs	80.00	SqFt	24	-	17	-	41
		Fine Grade for Slabs			24		17		41
		0.83 Labor hours							
		0.57 Equipment hours							
2240.00		**Structural Excavat'n**							
	bkho	3/8cy Backhoe Struct. Excav.	2.963	CuYd	10	-	8	-	18
		Structural Excavat'n			10		8		18
		0.17 Labor hours							
		0.141 Equipment hours							
2248.00		**Special Backfill Material**							
	rtrv	Retrieve Stockpile Material	2.963	cuyd	119	-	119	-	237
		Special Backfill Material			119		119		237
		0.30 Labor hours							
		0.30 Equipment hours							
3010.00		**Concrete - Ready Mix**							
	400a	4000psi Concrete (Type I,II)	1.574	CuYd	-	194	-	-	194
	load	Short Load Delivery Charge	1.00	Load	-	115	-	-	115
		Concrete - Ready Mix				309			309
3350.00		**Slab on Grade Edge Forms**							
	6	6"h Slab Edge Forms	21.00	SFCA	290	47	-	-	337
	26rl	2x6-RL Hem-Fir	42.00	LnFt	-	18	-	-	18
	stak	3/4"x 2'0" Square Steel Stakes	30.00	Use	-	29	-	-	29
		Slab on Grade Edge Forms			290	94			384
		9.251 Labor hours							
3503.00		**Chute Slabs on Grade**							
	610	Chute Place 6" Slabs on Grade	1.574	CuYd	65	-	-	0	66

Item	Description	Takeoff Qty		Labor Amount	Material Amount	Equipment Amount	Other Amount	Total Amount
	Chute Slabs on Grade			65			0	66
	2.33 Labor hours							
3590.00	**Non-Shrink Grout**							
wp	Grout Wall Pipe	0.07	CuFt	10	2	-	-	11
	Non-Shrink Grout			10	2			11
	0.39 Labor hours							
3600.00	**Trowel Finish Slabs**							
95	Trowel Finish 95 sqft Slabs	80.00	SqFt	73	2	-	1	76
	Trowel Finish Slabs			73	2		1	76
	2.212 Labor hours							
3640.00	**Liquid Slb Seal/Hard**							
c309	ASTM C-309 Curing Compound	80.00	SqFt	-	4	-	1	5
	Liquid Slb Seal/Hard				4		1	5
5010.00	**Reinforcing Bar Materials**							
4	#4 Reinforcing Bar (material)	0.04	Tons	-	68	-	-	68
4	#4 Reinforcing Bar (material)	0.04	Tons	-	76	-	-	76
	Reinforcing Bar Materials				144			144
5030.00	**Reinforcing Installation**							
cis7	1-3/4" IHC w/ sand plate	8.89	Each	-	5	-	-	5
rebr	Rebar Installation	0.08	Tons	65	0	-	-	66
	Reinforcing Installation			65	5			71
	1.27 Labor hours							
5030.10	**Reinforcing Bar Handling**							
rehd	Unload & Handle Rebar Equip.	0.08	tons	1	1	0	-	2
rehs	Rebar Installation Hoisting	0.08	Tons	4	-	9	-	13
	Reinforcing Bar Handling			4	1	10		15
	0.08 Labor hours							
	0.075 Equipment hours							
	CP#27			*2,584*	*578*	*153*	*604*	*3,918*
	67.182 Labor hours							
	1.08 Equipment hours							

Partial Totals

Description	Amount	Cuts/Adds	Net Amount	Totals	Hours	Rate	C Cost per Unit	rcent of Total

Partial Totals

Labor	2,584	2,584		67.182 hrs	65.94%	
Material	578	578			14.74%	
Subcontract						
Equipment	153	153		1.079 hrs	3.90%	
Other	604	604			15.41%	
	3,919		3,919		100.00	100.00%
Partial Total			***3,919***			

Sub Contractor's Summary

Trade: Plumbing
Sub's Name: Polson & Grady,1001 Zuni Dr Alamogordo,NM
Project: Ruidoso, Sewer Plant
Date: 9/14/2009
Sales Tax %: Excluded

Scope of Work Description:

Re route 1-1/4" LP Gas line per drawing W30-101-CH

Scope of Work Description	Materials					Labor			Equipment				Total Cost
	Item Description	Unit	Qty	Cost Per Unit	Total	Rate	# MH Hours	Total	Eq. Type	# Hrs.	Rate	Total	
	1-1/4" Poly Gas Pipe	ft	50	$1.10	$55.00			$0.00				$0.00	$55.00
	1-1/4" Blk Stl Pipe	ft	90	$2.75	$247.50			$0.00				$0.00	$247.50
	1-1/4" Poly Riser	ea	2	$44.75	$89.50			$0.00				$0.00	$89.50
	1-1/4" Blk Union	ea	2	$5.99	$11.98			$0.00				$0.00	$11.98
	1-1/4" Blk 90	ea	13	$3.67	$47.71			$0.00				$0.00	$47.71
	1-1/4" Nipples	ea	7	$3.90	$27.30			$0.00				$0.00	$27.30
	1-1/4" Gas stop	ea	2	$43.15	$86.30			$0.00				$0.00	$86.30
	Pipe dope, Tape , Oil	ls	1	$20.00	$20.00			$0.00				$0.00	$20.00
	Supports/Hangers	ea	10	$12.00	$120.00			$0.00				$0.00	$120.00
	~~Move LP Tank~~	~~ls~~	~~2~~	~~$75.00~~	~~$150.00~~			~~$0.00~~				~~$0.00~~	~~$150.00~~
	Permit/Inspection	ea	1	$80.00	$80.00			$0.00				$0.00	$80.00
	Truck/tools	ls	2	$35.00	$70.00			$0.00				$0.00	$70.00
	Bed material	ls	1	$50.00	$50.00			$0.00				$0.00	$50.00
	Core Drill	ea	1	$125.00	$125.00			$0.00				$0.00	$125.00
	Sleeve/caulk/escution	ea	1	$27.50	$27.50			$0.00				$0.00	$27.50
	Backhoe/Mob-Demob	ea	1	$400.00	$400.00			$0.00				$0.00	$400.00
	Marking Tape/Wire	ft	50	$0.35	$17.50			$0.00				$0.00	$17.50
	Plumber	hr			$0.00	$40.00	24.0	$960.00				$0.00	$960.00
	Operator	hr			$0.00	$28.00	12.0	$336.00				$0.00	$336.00
	Laborer	hr			$0.00	$20.00	16.0	$320.00				$0.00	$320.00
					$0.00			$0.00				$0.00	$0.00
Subtotals					$1,625.29		52.0	$1,616.00		0.0		$0.00	$3,241.29
												15%Labor burden	$242.40
												15% Overhead	$522.55
												~~10% Profit~~	~~$488.62~~
												Total	$4,406.86

-550.62

Revised Total

=3856.24

700 Rankin Rd., NE
Albuquerque, New Mexico 87107
Phone: (505) 898-8000
Fax: (505) 898-1289

Bogan Brothers Painting Co. Inc.

Fax

To:	Tatsch Construction, Inc. - Miguel	**From:**	Joe Garcia
Fax:	(575) 538-2552	**Pages:**	1
Phone:	(575) 538-3704	**Date:**	9/23/2009
Re:	Ruidoso WWTP	**CC:**	

☐ **Urgent** ☐ **For Review** ☐ **Please Comment** ☐ **Please Reply** ☐ **Please Recycle**

Miguel,

The price for painting the wall opening and new line as shown on drawing W30-101CH: $420.00

Thanks,

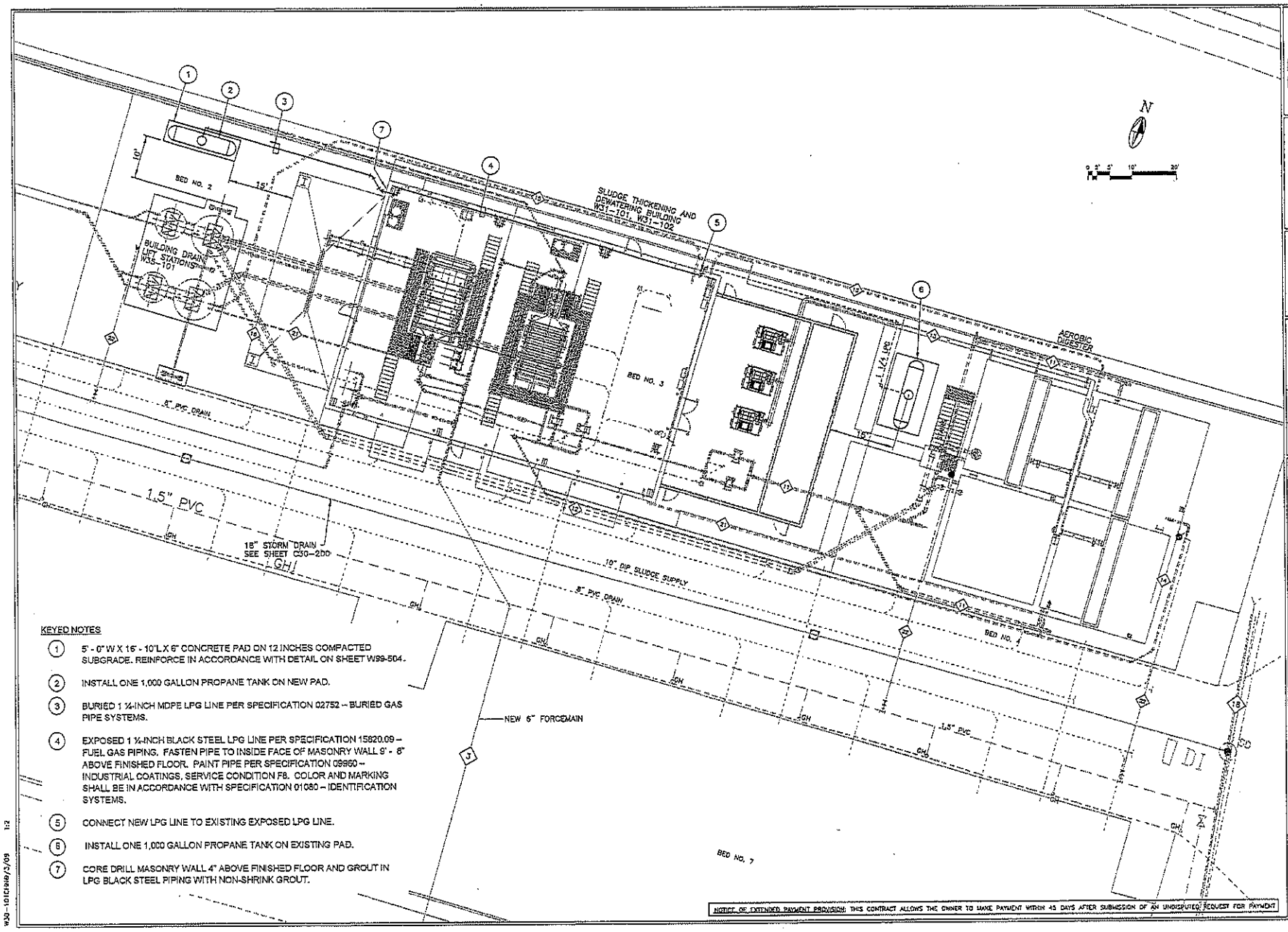

KEYED NOTES

1. 5' - 0" W X 16' - 10" L X 6" CONCRETE PAD ON 12 INCHES COMPACTED SUBGRADE. REINFORCE IN ACCORDANCE WITH DETAIL ON SHEET W99-504.
2. INSTALL ONE 1,000 GALLON PROPANE TANK ON NEW PAD.
3. BURIED 1 ¼-INCH MDPE LPG LINE PER SPECIFICATION 02752 – BURIED GAS PIPE SYSTEMS.
4. EXPOSED 1 ¼-INCH BLACK STEEL LPG LINE PER SPECIFICATION 15820.09 – FUEL GAS PIPING. FASTEN PIPE TO INSIDE FACE OF MASONRY WALL 9' - 8" ABOVE FINISHED FLOOR. PAINT PIPE PER SPECIFICATION 09960 – INDUSTRIAL COATINGS, SERVICE CONDITION F8. COLOR AND MARKING SHALL BE IN ACCORDANCE WITH SPECIFICATION 01080 – IDENTIFICATION SYSTEMS.
5. CONNECT NEW LPG LINE TO EXISTING EXPOSED LPG LINE.
6. INSTALL ONE 1,000 GALLON PROPANE TANK ON EXISTING PAD.
7. CORE DRILL MASONRY WALL 4" ABOVE FINISHED FLOOR AND GROUT IN LPG BLACK STEEL PIPING WITH NON-SHRINK GROUT.

NOTICE OF EXTENDED PAYMENT PROVISION: THIS CONTRACT ALLOWS THE OWNER TO MAKE PAYMENT WITHIN 45 DAYS AFTER SUBMISSION OF AN UNDISPUTED REQUEST FOR PAYMENT

Molzen-Corbin & ASSOCIATES
7201 Mike Bond S.E.
Albuquerque, New Mexico 87109
Tel: (505) 115-1700
Fax: (505) 115-4975

REV NO.	REV DATE	DESCRIPTION

PROJECT NUMBER:	05M067-11
DESIGNED BY:	STAFF
DRAWN BY:	A. LOPEZ
CHECKED BY:	M. SALAS
PROJECT ENGINEER:	K. MULLER
PROJECT DATE:	JULY 2008

YARD PIPING
EAST AREA
CHANGE REQUEST – MOVE PROPANE TANK

PHASE 1A – SLUDGE HANDLING AND ULTRAVIOLET DISINFECTION FACILITIES
RUIDOSO – RUIDOSO DOWNS REGIONAL WWTP JOINT USE BOARD
LINCOLN COUNTY, NEW MEXICO

W30-101CH
SHEET 9/03/09

W30-101CH09/3/09 1:2

Angel Campos

From: EdensJr, Walter, NMENV [Sandy.Edens@state.nm.us]
Sent: Wednesday, September 30, 2009 10:25 AM
To: Angel Campos; RandallCamp@ruidoso-nm.gov; cordpwd@zianet.com; williammorris@ruidoso-nm.gov; LisaSanchez@ruidoso-nm.gov
Cc: Del Archuleta; molzencorbin@windstream.net; Ken Muller
Subject: RE: Ruidoso Phase 1A - CP#27 - Relocate One Propane Tank

I concur and apologize for the delay in concurrence.

Sandy Edens, P.E.
Project Manager
New Mexico Environment Department, CPB
5500 San Antonio NE
Albuquerque, NM 87109
505-222-9512

From: Angel Campos [mailto:acampos@molzencorbin.com]
Sent: Monday, September 28, 2009 9:52 AM
To: RandallCamp@ruidoso-nm.gov; cordpwd@zianet.com; EdensJr, Walter, NMENV; williammorris@ruidoso-nm.gov; LisaSanchez@ruidoso-nm.gov
Cc: Archuleta, Del; molzencorbin@windstream.net; Ken Muller
Subject: Ruidoso Phase 1A - CP#27 - Relocate One Propane Tank

September 28, 2009

TO: Randall Camp, Village of Ruidoso
Bill Morris, Village of Ruidoso
Cleatus Richards, City of Ruidoso Downs
Sandy Edens, New Mexico Environment Department

RE: Engineer's Review of Change Proposal No. 27
Relocate One Propane Tank

A. SCOPE AND JUSTIFICATION: The design drawings show the installation of two parallel propane tanks located between the new building and the new digester (Drawing W30-101). The treatment plant site is very congested with existing treatment structures and with limited space to construct the new facilities over the existing sludge drying beds.

We were informed that with the distance between the new building and the new digester, only one propane tank can be placed at this location. The second tank would have to be located elsewhere to comply with the LP Gas Code Requirements. The attached Propane Tanks Layout Drawing shows the new location for the second tank. The scope for this work includes:

1. Construct reinforced slab for propane tank, including associated structural earthwork foundation.
2. Install buried gas piping to building.
3. Install gas piping in building.
4. Paint exposed gas piping in building.

B. ENGINEER'S COMMENTS: The Contractor's initial price proposal was for the amount of $12,408.88. Several items were negotiated and adjusted. The Contractor's estimate was reduced by $3,220 resulting from adjustments to the Plumber's estimate and the

Contractor's estimate. The revised price proposal is for the amount of $9,188.67 and includes subcontractor's costs, labor, materials, and equipment costs required to complete this work. The revised price proposal includes the allowable Contractor markups. We find the revised price proposal reasonable for the scope of work.

C. TIME EXTENSION: As noted on the price proposal, a twenty-eight (28) calendar date time extension is requested. The Contractor's justification is presented below:
1. Seven days due to work the Contractor could have completed had this issue not arisen (i.e. testing heaters, tank inspection, filling tanks).
2. Seven days for processing of the change proposal.
3. Fourteen days for completing the work associated with relocating the second propane tank.

We concur with the Contractor's time extension request and justification.

D. SUMMARY - REQUEST FOR APPROVAL BY OWNER AND NEW MEXICO ENVIRONMENT DEPARTMENT: The Engineer is requesting pre-approval of this additional work from the Owner and NMED. Please acknowledge pre-approval by replying to this request. This additional work in the amount of $9,188.67will be added by Change Order to the Contract Documents after receipt of NMED approval. Twenty-eight (28) calendar days will be added to the Contract Time.

NOTE: THE CONTRACTOR IS REQUESTING APPROVAL NOTIFICATION NO LATER THAN OCTOBER 2, 2009. YOUR IMMEDIATE REPLY TO THIS PRE-APPROVAL REQUEST IS APPRECIATED.

Please call me if you have any questions regarding this communication.

Angel Campos
Molzen-Corbin & Associates
acampos@molzencorbin.com
(505) 242-5700

This inbound email has been scanned for malicious software and transmitted safely to you using Webroot Email Security.

Confidentiality Notice: This e-mail,including all attachments is for the sole use of the intended recipient(s) and may contain confidential and privileged information. Any unauthorized review,use,disclosure or distribution is prohibited unless specifically provided under the New Mexico Inspection of Public Records Act. If you are not the intended recipient, please contact the sender and destroy all copies of this message.
This email has been scanned using Webroot Email Security.

This email and any files transmitted with it are confidential and intended solely for the use of the individual or entity to whom they are addressed. If you have received this email in error please notify the system manager.

This message contains confidential information and is intended only for the individual named. If you are not the named addressee you should not disseminate, distribute or copy this e-mail.

Angel Campos

From: Randy Camp [RandallCamp@ruidoso-nm.gov]
Sent: Monday, September 28, 2009 7:48 PM
To: Angel Campos
Subject: RE: Ruidoso Phase 1A - CP#27 - Relocate One Propane Tank

On behalf of the Village of Ruidoso, I concur with this change proposal.
Randall Camp
Public Works Director
Village of Ruidoso

From: Angel Campos [mailto:acampos@molzencorbin.com]
Sent: Monday, September 28, 2009 9:52 AM
To: RandallCamp@ruidoso-nm.gov; cordpwd@zianet.com; EdensJr, Walter, NMENV; williammorris@ruidoso-nm.gov; LisaSanchez@ruidoso-nm.gov
Cc: Del Archuleta; molzencorbin@windstream.net; Ken Muller
Subject: Ruidoso Phase 1A - CP#27 - Relocate One Propane Tank

September 28, 2009

TO: Randall Camp, Village of Ruidoso
Bill Morris, Village of Ruidoso
Cleatus Richards, City of Ruidoso Downs
Sandy Edens, New Mexico Environment Department

RE: Engineer's Review of Change Proposal No. 27
Relocate One Propane Tank

A. SCOPE AND JUSTIFICATION: The design drawings show the installation of two parallel propane tanks located between the new building and the new digester (Drawing W30-101). The treatment plant site is very congested with existing treatment structures and with limited space to construct the new facilities over the existing sludge drying beds.

We were informed that with the distance between the new building and the new digester, only one propane tank can be placed at this location. The second tank would have to be located elsewhere to comply with the LP Gas Code Requirements. The attached Propane Tanks Layout Drawing shows the new location for the second tank. The scope for this work includes:

1. Construct reinforced slab for propane tank, including associated structural earthwork foundation.
2. Install buried gas piping to building.
3. Install gas piping in building.
4. Paint exposed gas piping in building.

B. ENGINEER'S COMMENTS: The Contractor's initial price proposal was for the amount of $12,408.88. Several items were negotiated and adjusted. The Contractor's estimate was reduced by $3,220 resulting from adjustments to the Plumber's estimate and the Contractor's estimate. The revised price proposal is for the amount of $9,188.67 and includes subcontractor's costs, labor, materials, and equipment costs required to complete this work. The revised price proposal includes the allowable Contractor markups. We find the revised price proposal reasonable for the scope of work.

C. TIME EXTENSION: As noted on the price proposal, a twenty-eight (28) calendar date time extension is requested. The Contractor's justification is presented below:
1. Seven days due to work the Contractor could have completed had this issue not arisen (i.e. testing heaters, tank inspection, filling tanks).
2. Seven days for processing of the change proposal.
3. Fourteen days for completing the work associated with relocating the second propane tank.

We concur with the Contractor's time extension request and justification.

D. SUMMARY - REQUEST FOR APPROVAL BY OWNER AND NEW MEXICO ENVIRONMENT DEPARTMENT: The Engineer is requesting pre-approval of this additional work from the Owner and NMED. Please acknowledge pre-approval by replying to this request. This additional work in the amount of $9,188.67will be added by Change Order to the Contract Documents after receipt of NMED approval. Twenty-eight (28) calendar days will be added to the Contract Time.

NOTE: THE CONTRACTOR IS REQUESTING APPROVAL NOTIFICATION NO LATER THAN OCTOBER 2, 2009. YOUR IMMEDIATE REPLY TO THIS PRE-APPROVAL REQUEST IS APPRECIATED.

Please call me if you have any questions regarding this communication.

Angel Campos
Molzen-Corbin & Associates
acampos@molzencorbin.com
(505) 242-5700

Angel Campos

From: Cleatus Richards [cordpwd@zianet.com]
Sent: Monday, September 28, 2009 3:19 PM
To: Angel Campos
Subject: Re: Ruidoso Phase 1A - CP#27 - Relocate One Propane Tank

Angel:
I have rewiewed change proposal # 27 to relocate one (1) propane tank at additional cost of $ 9,188.67 and add 28 calendar days to contract time and hereby acknowledge my pre-approval of same.
Cleatus Richards
City of Ruidoso Downs

----- Original Message -----
From: Angel Campos
To: RandallCamp@ruidoso-nm.gov ; cordpwd@zianet.com ; EdensJr, Walter, NMENV ; williammorris@ruidoso-nm.gov ; LisaSanchez@ruidoso-nm.gov
Cc: Del Archuleta ; molzencorbin@windstream.net ; Ken Muller
Sent: Monday, September 28, 2009 9:51 AM
Subject: Ruidoso Phase 1A - CP#27 - Relocate One Propane Tank

September 28, 2009

TO: Randall Camp, Village of Ruidoso
Bill Morris, Village of Ruidoso
Cleatus Richards, City of Ruidoso Downs
Sandy Edens, New Mexico Environment Department

RE: Engineer's Review of Change Proposal No. 27
Relocate One Propane Tank

A. SCOPE AND JUSTIFICATION: The design drawings show the installation of two parallel propane tanks located between the new building and the new digester (Drawing W30-101). The treatment plant site is very congested with existing treatment structures and with limited space to construct the new facilities over the existing sludge drying beds.

We were informed that with the distance between the new building and the new digester, only one propane tank can be placed at this location. The second tank would have to be located elsewhere to comply with the LP Gas Code Requirements. The attached Propane Tanks Layout Drawing shows the new location for the second tank. The scope for this work includes:

1. Construct reinforced slab for propane tank, including associated structural earthwork foundation.
2. Install buried gas piping to building.
3. Install gas piping in building.
4. Paint exposed gas piping in building.

B. ENGINEER'S COMMENTS: The Contractor's initial price proposal was for the amount of $12,408.88. Several items were negotiated and adjusted. The Contractor's estimate was reduced by $3,220 resulting from adjustments to the Plumber's estimate and the Contractor's estimate. The revised price proposal is for the amount of $9,188.67 and includes subcontractor's costs, labor, materials, and equipment costs required to complete this work. The revised price proposal includes the allowable Contractor markups. We find the revised price proposal reasonable for the scope of work.

C. TIME EXTENSION: As noted on the price proposal, a twenty-eight (28) calendar date time extension is requested. The Contractor's justification is presented below:
1. Seven days due to work the Contractor could have completed had this issue not arisen (i.e. testing heaters, tank inspection, filling tanks).
2. Seven days for processing of the change proposal.
3. Fourteen days for completing the work associated with relocating the second propane tank.

We concur with the Contractor's time extension request and justification.

D. SUMMARY - REQUEST FOR APPROVAL BY OWNER AND NEW MEXICO ENVIRONMENT DEPARTMENT: The Engineer is requesting pre-approval of this additional work from the Owner and NMED. Please acknowledge pre-approval by replying to this request. This additional work in the amount of $9,188.67will be added by Change Order to the Contract Documents after receipt of NMED approval. Twenty-eight (28) calendar days will be added to the Contract Time.

NOTE: THE CONTRACTOR IS REQUESTING APPROVAL NOTIFICATION NO LATER THAN OCTOBER 2, 2009. YOUR IMMEDIATE REPLY TO THIS PRE-APPROVAL REQUEST IS APPRECIATED.

Please call me if you have any questions regarding this communication.

Angel Campos
Molzen-Corbin & Associates
acampos@molzencorbin.com
(505) 242-5700

EXHIBIT 8

CHANGE PROPOSAL NO. 28

INCLUDES:

1) **Notice to Proceed Based on Pre-Approvals Received From Owner and NMED with Contractor's Change Proposal No. 28**

2) **NMED Pre-Approval Dated September 24, 2009**

3) **Village of Ruidoso Pre-Approval Dated September 24, 2009**

4) **Ruidoso Downs Pre-Approval Dated September 25, 2009**

Angel Campos

To: 'Richard A.Rogers'; Miguel Chandler
Cc: RandallCamp@ruidoso-nm.gov; cordpwd@zianet.com; EdensJr, Walter, NMENV; williammorris@ruidoso-nm.gov; LisaSanchez@ruidoso-nm.gov; Del Archuleta; molzencorbin@windstream.net
Subject: Ruidoso Phase 1A - CP#28 - Move Two WAW Lines - Notice to Proceed
Attachments: CP#28 - Move 2 WAW Lines at OFE.PDF

September 25, 2009

TO: Tatsch Construction, Inc

RE: Change Proposal No. 28
Move Two WAW Lines at the Gravity Belt Thickener and Belt Filter Press
Notice to Proceed

This is to inform Tatsch Construction that the Village of Ruidoso, City of Ruidoso Downs and the New Mexico Environment Department have pre-approved this additional work. Based on these pre-approvals, Tatsch Construction to proceed with this additional work.

Angel Campos
Molzen-Corbin & Associates
acampos@molzencorbin.com
(505) 242-5700

From: Angel Campos
Sent: Thursday, September 24, 2009 3:40 PM
To: 'RandallCamp@ruidoso-nm.gov'; cordpwd@zianet.com; 'williammorris@ruidoso-nm.gov'; 'Sandy.Edens@state.nm.us'; 'LisaSanchez@ruidoso-nm.gov'
Cc: Chuck Spinello; Del Archuleta; molzencorbin@windstream.net
Subject: Ruidoso Phase 1A - CP#28 - Move Two WAW Lines

September 24, 2009

TO: Randall Camp, Village of Ruidoso
Bill Morris, Village of Ruidoso
Cleatus Richards, City of Ruidoso Downs
Sandy Edens, New Mexico Environment Department

RE: Engineer's Review of Change Proposal No. 28
Move Two WAW Lines at the Gravity Belt Thickener and Belt Filter Press

A. SCOPE AND JUSTIFICATION: The washwater (WAW) connections installed at the Gravity Belt Thickener and Belt Filter Press allows process inlet sludge to flow and mix with the washwater supply which feeds a hose bibb at each of the machines. These washwater supply connections to the hose bibbs need to be relocated. The new connection points will supply clear washwater to the hose bibbs.

B. ENGINEER'S COMMENTS: The Contractor's price proposal itemizes all labor, materials, and equipment required to complete this work. The Contractor's price proposal is for a total

amount of $1,551.21. The price proposal includes the allowable Contractor markup. The work includes two tapping saddle connections with related piping, valves, hangers and painting of piping for the new washwater supply sources. We find the price proposal reasonable for the scope of work. A time extension of three (3) calendar day is requested by the Contractor.

C. SUMMARY - REQUEST FOR APPROVAL BY OWNER AND NEW MEXICO ENVIRONMENT DEPARTMENT: The Engineer is requesting pre-approval of this additional work from the Owner and NMED. Please acknowledge pre-approval by replying to this request. This additional work in the amount of $1,551.21 will be added by Change Order to the Contract Documents after receipt of NMED approval. Three (3) calendar days will be added to the Contract Time.

NOTE: THE CONTRACTOR IS REQUESTING APPROVAL NOTIFICATION NO LATER THAN OCTOBER 2, 2009. YOUR IMMEDIATE REPLY TO THIS PRE-APPROVAL REQUEST IS APPRECIATED.

Please call me if you have any questions regarding this communication.

Angel Campos
Molzen-Corbin & Associates
acampos@molzencorbin.com
(505) 242-5700

Tatsch Construction, Inc.

General Contractors

Licenses: NM 15206, AZ 074121 & 074122

208 Highway 180 West
Silver City, NM 88061

Phone: 575-538-3704 Fax: 575-538-2552

www.tatschconstruction.com

24-September-2009

To: Angel Campos
Molzen-Corbin & Associates
2701 Miles Road, S.E.
Albuquerque, NM 87106

Re: **Change Proposal No. 28**
Phase 1A - Sludge Handling and Ultraviolet Disinfection Facilities

RFP: **A. Campos made a verbal request to R. Rogers**

Description: **Move two existing 1" WAW lines one at GBT and one at BFP.**

Excludes:

General Work: Tatsch Construction Inc.				1,337.00	
Bond Premium	1.551 M		$6.00	9.31	
Subcontract Bond Premium	0.000 M		$25.00	0.00	
Builders Risk Insurance	15.512 C		$0.0873	1.35	
Owner-Contractor Protective Insurance	1.551 M		$0.7850	1.22	
			Subtotal	1,348.88	
		Fee		202.33	
			Subtotal		1,551.21
Subcontracts: None				0.00	
			Subtotal	0.00	
		Fee on Subcontracts		0.00	
			Subtotal		0.00
			Total This Change Proposal		**$1,551.21**

Additional contract time in the amount of three **(3) calendar days** will be required for this work.
This proposal is offered **for written acceptance by the Owner no later than 2 October 2009** and is thereafter **withdrawn.**

Richard A. Rogers

Submitted by: Richard A. Rogers, Vice President

Item	Description	Takeoff Qty		Labor Amount	Material Amount	Equipment Amount	Other Amount	Total Amount
CP#28								
9901.00	**Painting Subcontract**							
sub	Painting Subcontractor	20.00	LSum	-	-	-	-	150
	Painting Subcontract							150
15061.01	**1" I.P.S. PVC Pipe**							
0179	1" Sch. 80 PVC Pipe	20.00	LnFt	-	24	-	-	24
lnft	1" PVC Pipe Installation	33.00	lnft	396	-	-	-	396
sw	1" Solvent Weld Pipe Connection	14.00	each	140	1	-	-	141
thd	1" Make-up Threaded Connection	6.00	Each	49	-	-	-	49
thd	1" Make-up Threaded Connection	6.00	Each	49	-	-	-	49
	1" I.P.S. PVC Pipe			634	25			660
	17.77 Labor hours							
15062.01	**1" Sch.80 PVC Fittings**							
9s	1" 90 Ell (SxS) Sch.80 PVC	5.00	Each	-	23	-	-	23
am	1" Male Adapter (SxMpt) Sch.80 PVC	6.00	Each	-	23	-	-	23
cs	1" Coupling (SxS) Sch.80 PVC	2.00	Each	-	12	-	-	12
pt	1" Plug (Mpt) Sch.80 PVC	2.00	Each	-	4	-	-	4
	1" Sch.80 PVC Fittings				62			62
15081.04	**4" Service/Tap Saddles**							
100d	4" DIP x 1" Fpt Service Saddle	2.00	Each	143	85	-	30	258
	4" Service/Tap Saddles			143	85		30	258
	4.00 Labor hours							
15100.01	**1" Valve Installation**							
v	1" Valve (labor only)	2.00	Each	43	-	-	-	43
	1" Valve Installation			43				43
	1.20 Labor hours							
15106.01	**1" Ball Valves**							
tbp	1" Full Port Ball Valve (Fpt x Fpt) Bronze	2.00	Each	-	56	-	-	56
	1" Ball Valves				56			56
15165.00	**Hangers & Supports**							
Ap 4	1/2" Allthread (Plated)	40.00	LnFt	-	73	-	-	73

Item	Description	Takeoff Qty		Labor Amount	Material Amount	Equipment Amount	Other Amount	Total Amount
	Hangers & Supports				73			73
15165.02	**2" Pipe Hangers/Supports**							
	70 1-1/4" to 2" Fig.70 Adjustable Swivle Ring	4.00	Each	17	3	-	-	20
	2" Pipe Hangers/Supports			17	3			20
	0.48 Labor hours							
15190.00	**Mechanical Identification**							
tag	Valve Tags	2.00	Each	8	8	-	-	16
	Mechanical Identification			8	8			16
	0.20 Labor hours							
	CP#28			***844***	***313***	***0***	***30***	***1,337***
	23.65 Labor hours							

Partial Totals

Description	Amount	Cuts/Adds	Net Amount	Totals	Hours	Rate	C Cost per Unit	rcent of Total	
Labor	844		844		23.648 hrs			63.15%	
Material	313		313					23.37%	
Subcontract	150		150					11.22%	
Equipment									
Other	30		30					2.24%	
	1,337			1,337				100.00	100.00%
Partial Total				***1,337***					

Angel Campos

From: EdensJr, Walter, NMENV [Sandy.Edens@state.nm.us]
Sent: Thursday, September 24, 2009 4:39 PM
To: Angel Campos; RandallCamp@ruidoso-nm.gov; cordpwd@zianet.com; williammorris@ruidoso-nm.gov; LisaSanchez@ruidoso-nm.gov
Cc: Chuck Spinello; Del Archuleta; molzencorbin@windstream.net
Subject: RE: Ruidoso Phase 1A - CP#28 - Move Two WAW Lines

I concur assuming funds are available.

Sandy Edens, P.E.
Project Manager
New Mexico Environment Department, CPB
5500 San Antonio NE
Albuquerque, NM 87109
505-222-9512

From: Angel Campos [mailto:acampos@molzencorbin.com]
Sent: Thursday, September 24, 2009 3:40 PM
To: RandallCamp@ruidoso-nm.gov; cordpwd@zianet.com; williammorris@ruidoso-nm.gov; EdensJr, Walter, NMENV; LisaSanchez@ruidoso-nm.gov
Cc: Chuck Spinello; Archuleta, Del; molzencorbin@windstream.net
Subject: Ruidoso Phase 1A - CP#28 - Move Two WAW Lines

September 24, 2009

TO: Randall Camp, Village of Ruidoso
Bill Morris, Village of Ruidoso
Cleatus Richards, City of Ruidoso Downs
Sandy Edens, New Mexico Environment Department

RE: Engineer's Review of Change Proposal No. 28
Move Two WAW Lines at the Gravity Belt Thickener and Belt Filter Press

A. SCOPE AND JUSTIFICATION: The washwater (WAW) connections installed at the Gravity Belt Thickener and Belt Filter Press allows process inlet sludge to flow and mix with the washwater supply which feeds a hose bibb at each of the machines. These washwater supply connections to the hose bibbs need to be relocated. The new connection points will supply clear washwater to the hose bibbs.

B. ENGINEER'S COMMENTS: The Contractor's price proposal itemizes all labor, materials, and equipment required to complete this work. The Contractor's price proposal is for a total amount of $1,551.21. The price proposal includes the allowable Contractor markup. The work includes two tapping saddle connections with related piping, valves, hangers and painting of piping for the new washwater supply sources. We find the price proposal reasonable for the scope of work. A time extension of three (3) calendar day is requested by the Contractor.

C. SUMMARY - REQUEST FOR APPROVAL BY OWNER AND NEW MEXICO ENVIRONMENT DEPARTMENT: The Engineer is requesting pre-approval of this additional work from the Owner and NMED. Please acknowledge pre-approval by replying to this request. This additional work in the amount of $1,551.21 will be added by Change Order to the Contract Documents after receipt of NMED approval. Three (3) calendar days will be added to the Contract Time.

NOTE: THE CONTRACTOR IS REQUESTING APPROVAL NOTIFICATION NO LATER THAN OCTOBER 2, 2009. YOUR IMMEDIATE REPLY TO THIS PRE-APPROVAL REQUEST IS APPRECIATED.

Please call me if you have any questions regarding this communication.

Angel Campos
Molzen-Corbin & Associates
acampos@molzencorbin.com
(505) 242-5700

This inbound email has been scanned for malicious software and transmitted safely to you using Webroot Email Security.

Confidentiality Notice: This e-mail,including all attachments is for the sole use of the intended recipient(s) and may contain confidential and privileged information. Any unauthorized review,use,disclosure or distribution is prohibited unless specifically provided under the New Mexico Inspection of Public Records Act. If you are not the intended recipient, please contact the sender and destroy all copies of this message.
This email has been scanned using Webroot Email Security.

Confidentiality Notice: This e-mail, including all attachments is for the sole use of the intended recipient(s) and may contain confidential and privileged information. Any unauthorized review, use, disclosure or distribution is prohibited unless specifically provided under the New Mexico Inspection of Public Records Act. If you are not the intended recipient, please contact the sender and destroy all copies of this message. -- This email has been scanned by the Sybari - Antigen Email System.

Angel Campos

From: Randy Camp [RandallCamp@ruidoso-nm.gov]
Sent: Thursday, September 24, 2009 3:44 PM
To: Angel Campos
Subject: RE: Ruidoso Phase 1A - CP#28 - Move Two WAW Lines

On behalf of the Village of Ruidoso, I concur.
Randall Camp
Public Works Director,
Village of Ruidoso

From: Angel Campos [mailto:acampos@molzencorbin.com]
Sent: Thursday, September 24, 2009 3:40 PM
To: RandallCamp@ruidoso-nm.gov; cordpwd@zianet.com; williammorris@ruidoso-nm.gov; Sandy.Edens@state.nm.us; LisaSanchez@ruidoso-nm.gov
Cc: Chuck Spinello; Del Archuleta; molzencorbin@windstream.net
Subject: Ruidoso Phase 1A - CP#28 - Move Two WAW Lines

September 24, 2009

TO: Randall Camp, Village of Ruidoso
Bill Morris, Village of Ruidoso
Cleatus Richards, City of Ruidoso Downs
Sandy Edens, New Mexico Environment Department

RE: Engineer's Review of Change Proposal No. 28
Move Two WAW Lines at the Gravity Belt Thickener and Belt Filter Press

A. SCOPE AND JUSTIFICATION: The washwater (WAW) connections installed at the Gravity Belt Thickener and Belt Filter Press allows process inlet sludge to flow and mix with the washwater supply which feeds a hose bibb at each of the machines. These washwater supply connections to the hose bibbs need to be relocated. The new connection points will supply clear washwater to the hose bibbs.

B. ENGINEER'S COMMENTS: The Contractor's price proposal itemizes all labor, materials, and equipment required to complete this work. The Contractor's price proposal is for a total amount of $1,551.21. The price proposal includes the allowable Contractor markup. The work includes two tapping saddle connections with related piping, valves, hangers and painting of piping for the new washwater supply sources. We find the price proposal reasonable for the scope of work. A time extension of three (3) calendar day is requested by the Contractor.

C. SUMMARY - REQUEST FOR APPROVAL BY OWNER AND NEW MEXICO ENVIRONMENT DEPARTMENT: The Engineer is requesting pre-approval of this additional work from the Owner and NMED. Please acknowledge pre-approval by replying to this request. This additional work in the amount of $1,551.21 will be added by Change Order to the Contract Documents after receipt of NMED approval. Three (3) calendar days will be added to the Contract Time.

NOTE: THE CONTRACTOR IS REQUESTING APPROVAL NOTIFICATION NO LATER THAN OCTOBER 2, 2009. YOUR IMMEDIATE REPLY TO THIS PRE-APPROVAL REQUEST IS APPRECIATED.

Please call me if you have any questions regarding this communication.

Angel Campos
Molzen-Corbin & Associates
acampos@molzencorbin.com
(505) 242-5700

Angel Campos

From: Cleatus Richards [cordpwd@zianet.com]
Sent: Friday, September 25, 2009 10:06 AM
To: Angel Campos
Subject: Re: Ruidoso Phase 1A - CP#28 - Move Two WAW Lines

AngeL:
I have reviewed change proposal # 28 to move two (2) WAW lines at the gravity belt thickener and belt filter press at additional cost of $ 1,551.21 and add three calendar days to contract time and hereby acknowledge my pre-approval of same.
Cleatus Richards
City of Ruidoso Downs

----- Original Message -----
From: Angel Campos
To: RandallCamp@ruidoso-nm.gov ; cordpwd@zianet.com ; williammorris@ruidoso-nm.gov ; Sandy.Edens@state.nm.us ; LisaSanchez@ruidoso-nm.gov
Cc: Chuck Spinello ; Del Archuleta ; molzencorbin@windstream.net
Sent: Thursday, September 24, 2009 3:40 PM
Subject: Ruidoso Phase 1A - CP#28 - Move Two WAW Lines

September 24, 2009

TO: Randall Camp, Village of Ruidoso
Bill Morris, Village of Ruidoso
Cleatus Richards, City of Ruidoso Downs
Sandy Edens, New Mexico Environment Department

RE: Engineer's Review of Change Proposal No. 28
Move Two WAW Lines at the Gravity Belt Thickener and Belt Filter Press

A. SCOPE AND JUSTIFICATION: The washwater (WAW) connections installed at the Gravity Belt Thickener and Belt Filter Press allows process inlet sludge to flow and mix with the washwater supply which feeds a hose bibb at each of the machines. These washwater supply connections to the hose bibbs need to be relocated. The new connection points will supply clear washwater to the hose bibbs.

B. ENGINEER'S COMMENTS: The Contractor's price proposal itemizes all labor, materials, and equipment required to complete this work. The Contractor's price proposal is for a total amount of $1,551.21. The price proposal includes the allowable Contractor markup. The work includes two tapping saddle connections with related piping, valves, hangers and painting of piping for the new washwater supply sources. We find the price proposal reasonable for the scope of work. A time extension of three (3) calendar day is requested by the Contractor.

C. SUMMARY - REQUEST FOR APPROVAL BY OWNER AND NEW MEXICO ENVIRONMENT DEPARTMENT: The Engineer is requesting pre-approval of this additional work from the Owner and NMED. Please acknowledge pre-approval by replying to this request. This additional work in the amount of $1,551.21 will be added by Change Order to the Contract Documents after receipt of NMED approval. Three (3) calendar days will be added to the Contract Time.

NOTE: THE CONTRACTOR IS REQUESTING APPROVAL NOTIFICATION NO LATER THAN OCTOBER 2, 2009. YOUR IMMEDIATE REPLY TO THIS PRE-APPROVAL REQUEST IS APPRECIATED.

Please call me if you have any questions regarding this communication.

Angel Campos
Molzen-Corbin & Associates
acampos@molzencorbin.com
(505) 242-5700

EXHIBIT 9

CHANGE PROPOSAL NO. 29

INCLUDES:

1) **Change Proposal No. 29, Rev. 2 – Received from Tatsch on October 19, 2009***

2) **Notice to Proceed Based on Pre-Approvals Received From Owner and NMED with Contractor's Change Proposal No. 29 released to Tatsch Construction on October 15, 2009 by Engineer.**

3) **NMED Pre-Approval Dated October 5, 2009**

4) **Village of Ruidoso Pre-Approval Dated October 6, 2009**

5) **Ruidoso Downs Pre-Approval Dated October 6, 2009**

* *Tatsch Construction changed number of days from 6 calendar days to 12 calendar days for manufacture and delivery of spray-wash system components.*

Angel Campos

From: Angel Campos
Sent: Thursday, October 15, 2009 1:50 PM
To: 'Richard A.Rogers'; 'Miguel Chandler'
Subject: FW: Ruidoso Phase 1A - CP No. 29 Gravity Thickener Hopper Spray System - Notice to Proceed
Attachments: CP#29 rev1 - Add Spray System to GBT Hopper.pdf

Miguel Chandler, Tatsch Construction

Copy of Notice to Proceed. I will call you to discuss.

Angel Campos
Molzen-Corbin & Associates
acampos@molzencorbin.com
(505) 242-5700

From: Angel Campos
Sent: Tuesday, October 06, 2009 11:21 AM
To: 'Randall Camp'; cordpwd@zianet.com; 'EdensJr, Walter, NMENV'; WilliamMorris@ruidoso-nm.gov; 'LisaSanchez@ruidoso-nm.gov'
Cc: molzencorbin@windstream.net; Eric Sorenson; Del Archuleta; Ron Mosher
Subject: Ruidoso Phase 1A - CP No. 29 Gravity Thickener Hopper Spray System - Notice to Proceed

October 6, 2009

TO: Richard Rogers, Tatsch Construction
Miguel Chandler, Tatsch Construction

CC: Randall Camp, Village of Ruidoso
Bill Morris, Village of Ruidoso
Cleatus Richards, City of Ruidoso Downs
Sandy Edens, New Mexico Environment Department

RE: Ruidoso WWTP Phase 1A Construction
Change Proposal No. 29 – Add Spray Nozzle System to Gravity Belt Thickener Hopper - Notice to Proceed

This is to inform Tatsch Construction that the Village of Ruidoso, City of Ruidoso Downs, and the New Mexico Environment Department have pre-approved Change Proposal No. 29 summarized in the attachment dated October 5, 2009. By receipt of these pre-approvals, Tatsch Construction is authorized to proceed with this change proposal for the amount of $4,223.54. The requested time extension of six (6) calendar day is approved. This change proposal will be added to the Contract by the Change Order provisions of the Contract Documents and will be included in the next formal Change Order to the Contract.

Please call me, should you have any questions regarding this communication.

Sincerely,

From: Angel Campos
Sent: Monday, October 05, 2009 2:19 PM
To: 'Randall Camp'; cordpwd@zianet.com; 'EdensJr, Walter, NMENV'; 'LisaSanchez@ruidoso-nm.gov'
Cc: Del Archuleta; Ron Mosher; Eric Sorenson
Subject: Ruidoso Phase 1A - Change Proposal No. 29 Gravity Thickener Hopper Spray System - Request for Pre-Approval

October 5, 2009

TO: Randall Camp, Village of Ruidoso
Cleatus Richards, City of Ruidoso Downs
Sandy Edens, New Mexico Environment Department

RE: Engineer's Review of Change Proposal No. 29
Add Spray Nozzle System to Gravity Belt Thickener Hopper
Request for Pre-Approval

A. SCOPE AND JUSTIFICATION: Tatsch Construction and Enviroquip tested the belt filter press and gravity belt thickener on September 15 and 16, 2009. Enviroquip field representative recommended to add a three spray nozzle system to the gravity belt thickener. The automated spray nozzle system would be used at shut down of the thickener to assist in removing thickened sludge from the hopper and also to remove thickened sludge from the pump forcemain line. Removing thickened sludge from the forcemain line will prevent potential clogging/plugging problems.

The scope of work for the spray nozzle system will include:

1. Extend a 1" washwater supply line to the hopper, include a shut off valve and solenoid valve.
2. Install three spray nozzles in the hopper.
3. Install electrical conduit and wiring to solenoid valve.
4. Revise hardware and software programming to operate the solenoid valve.

The addition of the hopper spray system was approved by the Village of Ruidoso and the City of Ruidoso Down.

B. ENGINEER'S COMMENTS: The Contractor's initial price proposal is not approved. The Contractor's revised price is for $4,223.54 which includes all labor, spray system from Enviroquip, electrical work plus Contractor allowable markups. The spray system materials from Enviroquip is for $2,042 and a listing of the components is included in the proposal. We find the revised price proposal reasonable for the scope of work. A time extension of six (6) calendar days is requested by the Contractor.

C. SUMMARY - REQUEST FOR APPROVAL BY OWNER AND NEW MEXICO ENVIRONMENT DEPARTMENT: The Engineer is requesting pre-approval of this additional work from the Owner and NMED. Please acknowledge pre-approval by replying to this request. This additional work in the amount of $4,223.54. will be added by Change Order to the Contract Documents after receipt of NMED approval. A time extension of six (6) calendar days will also be included in the Change Order.

NOTE: TATSCH CONSTRUCTION IS REQUESING A RESPONSE TO PROCEED NO LATER THAN OCTOBER 9, 2009.

Please call me if you have any questions regarding this communication.

Angel Campos
Molzen-Corbin & Associates
acampos@molzencorbin.com
(505) 242-5700

From: Randy Camp [mailto:RandallCamp@ruidoso-nm.gov]
Sent: Friday, September 18, 2009 1:55 PM
To: Angel Campos
Subject: RE: Ruidoso Phase 1A - Gravity Thickener Hopper Spray System

On behalf of the Village of Ruidoso, I approve of this modification.
Randall Camp
Public Works Director
Village of Ruidoso

From: Angel Campos [mailto:acampos@molzencorbin.com]
Sent: Friday, September 18, 2009 6:23 AM
To: RandallCamp@ruidoso-nm.gov; cordpwd@zianet.com; BobbySnowden@ruidoso-nm.gov
Cc: Richard A.Rogers; miguel@tatschconstruction.com; molzencorbin@windstream.net; Del Archuleta; Eric Sorenson; Henry Henderson
Subject: Ruidoso Phase 1A - Gravity Thickener Hopper Spray System

September 18, 2009

RE: Gravity Belt Thickener Verification by Enviroquip
Hopper Modifications

Tatsch Construction and Enviroquip tested the belt filter press and gravity belt thickener on September 15 and 16. The testing included electrical and instrumentation/control verification. Gary Hahn, Enviroquip field representative recommended to add a three spray nozzle system to the gravity belt thickener. The automated spray nozzle system would be used at shut down of the thickener to assist in removing thickened sludge from the hopper and also to remove thickened sludge from the pump forcemain line. Removing thickened sludge from the forcemain line will prevent potential clogging/plugging problems.

The scope of work for the spray nozzle system will include:

5. Extend a 1" washwater supply line to the hopper, include a shut off valve and solenoid valve.
6. Install three spray nozzles in the hopper.
7. Install electrical conduit and wiring to solenoid valve.
8. Revise hardware and software programming to operate the solenoid valve.

We agree with Enviroquip's recommendation to add the spray system in the hopper. I am requesting authorization from Ruidoso and Ruidoso Down to request a price proposal from Tatsch Construction.

Please call me should you have any questions regarding this request.

Sincerely,

Angel Campos
Molzen-Corbin & Associates
acampos@molzencorbin.com
(505) 242-5700

Tatsch Construction, Inc.

General Contractors

Licenses: NM 15206, AZ 074121 & 074122

208 Highway 180 West
Silver City, NM 88061

Phone: 575-538-3704 Fax: 575-538-2552

www.tatschconstruction.com

19-October-2009

To: Angel Campos
Molzen-Corbin & Associates
2701 Miles Road, S.E.
Albuquerque, NM 87106

Re: **Change Proposal No. 29 rev. 2**
Phase 1A - Sludge Handling and Ultraviolet Disinfection Facilities

RFP: **A. Campos made request via email dated 19 September 2009.**

Description: **Add spray system and controls to the Gravity Belt Thickener Hopper.**

Excludes:

General Work:	Tatsch Construction Inc.			898.00	
	Enviroquip			2,042.00	
	Bond Premium	4.224 M	$6.00	25.34	
	Subcontract Bond Premium	0.747 M	$25.00	18.68	
	Builders Risk Insurance	42.235 C	$0.0873	3.69	
	Owner-Contractor Protective Insurance	4.224 M	$0.7850	3.32	
			Subtotal	2,991.03	
		Fee		448.65	
			Subtotal		3,439.68
Subcontracts:	US Electrical Corporation			746.53	
			Subtotal	746.53	
		Fee on Subcontracts		37.33	
			Subtotal		783.86
			Total This Change Proposal		**$4,223.54**

We request additional contract time as follows: six days for procssing of this CP and six days for material delivery.

Additional contract time in the amount of twelve **(12) calendar days** will be required for this work.
This proposal is offered **for written acceptance by the Owner no later than 22 October 2009** and is thereafter **withdrawn.**

Richard A. Rogers

Submitted by: Richard A. Rogers, Vice President

Item	Description	Takeoff Qty		Labor Amount	Material Amount	Equipment Amount	Other Amount	Total Amount
CP#29								
11225.00								
spry	Scum Spray Header System	18.00	LnFt	642	18	-	-	660
				642	18			660
	18.00 Labor hours							
15061.01	**1" I.P.S. PVC Pipe**							
	0179 1" Sch. 80 PVC Pipe	10.00	LnFt	-	12	-	-	12
lnft	1" PVC Pipe Installation	8.00	lnft	24	-	-	-	24
	1" I.P.S. PVC Pipe			24	12			36
	0.672 Labor hours							
15061.04	**4" I.P.S. PVC Pipe**							
lnft	4" PVC Pipe Installation	2.00	lnft	12	-	-	-	12
thd	4" Make-up Threaded Connection	1.00	Each	10	-	-	-	10
	4" I.P.S. PVC Pipe			22				22
	0.63 Labor hours							
15062.01	**1" Sch.80 PVC Fittings**							
9s	1" 90 Ell (SxS) Sch.80 PVC	1.00	Each	-	5	-	-	5
9t	1" 90 Ell (Fpt x Fpt) Sch.80 PVC	4.00	Each	-	14	-	-	14
	1" Sch.80 PVC Fittings				19			19
15081.04	**4" Service/Tap Saddles**							
100d	4" DIP x 1" Fpt Service Saddle	1.00	Each	71	43	-	-	114
	4" Service/Tap Saddles			71	43			114
	2.00 Labor hours							
15100.01	**1" Valve Installation**							
v	1" Valve (labor only)	1.00	Each	11	-	-	-	11
	1" Valve Installation			11				11
	0.30 Labor hours							
15122.00	**Solenoid Valves**							
	8 1" Solenoid Valve	1.00	Each	36	0	-	-	36

Item	Description	Takeoff Qty	Labor Amount	Material Amount	Equipment Amount	Other Amount	Total Amount
	Solenoid Valves		36				36
	1.00 Labor hours						
	CP#29		*807*	*91*	*0*	*0*	*898*
	22.602 Labor hours						

Partial Totals

Description	Amount	Cuts/Adds	Net Amount	Totals	Hours	Rate	C Cost per Unit	rcent of Total	
Labor	807		807		22.602 hrs			89.83%	
Material	91		91					10.14%	
Subcontract									
Equipment									
Other									
	898			898				100.00	100.00%
Partial Total				***898***					

U.S. ELECTRICAL CORPORATION
301 California St. SE
Albuquerque, NM 87108
505-260-1000
505-260-1001 fax

October 2, 2009

Tatsch Construction, Inc.
208 Highway 180 West
Silver City, NM 88061

Attention: Miguel Chandler
Reference: Phase 1A - Sludge Handling and UV Disinfection Facilities
Subject: Proposed Change Order - GBT Spray System

USEC is pleased to provide a cost for the above referenced RFP for the sum of: $746.53

USEC is including the following:

1. See attached sheets for details.
2. Proposal is based on standard working hours.

USEC is excluding the following:
1. NM Gross receipts tax
2.
3. Proposal is valid for 30 days.

Should you have any questions concerning this proposal, please do not hesitate to call at 505-260-1000.

Sincerely,
U.S. Electrical Corporation

James J. Garcia

cc: job file

U.S. ELECTRICAL CORPORATION

PROPOSED CHANGE/DIRECTED CHANGE ORDER SUMMARY SHEET

FIRM NAME: US ELECTRICAL
DATE: 10/2/2009

PCO _____

Subject: Proposed Change Order - GBT Spray System

INDIVIDUAL SUBCONTRACTOR SUMMARY

TOTAL DIRECT LABOR:	$ 263.82	TOTAL MATERIAL:	$ 232.78
LABOR BURDEN: 53%	$ 139.83	TOTAL LABOR:	$ 403.65
		TOTAL LABOR/MATERIAL	$ 636.43
		MARK UP @ 15%	$ 95.46
		SUBTOTAL	$ 731.89
		BOND @ 2%	$ 14.64
		GRAND TOTAL	$ 747

PRIME CONTRACTOR SUMMARY

TOTAL DIRECT LABOR:	$		
LABOR BURDEN: ___%	$		
TOTAL LABOR:	$	TOTAL MATERIAL:	$
TOTAL OF PRIME CONTRACTOR LABOR AND MATERIAL:			$
TOTAL OF ALL SUBCONTRACT(S) LABOR AND MATERIAL:			$
GRAND TOTAL OF ALL LABOR AND MATERIAL:			$
PRIME CONTRACTOR OVERHEAD:	%		$
PRIME CONTRACTOR PROFIT:	%		$
PRIME CONTRACTOR BOND:	%		$
		GRAND TOTAL:	$

SCHEDULE IMPACT:

SIGNED: _____ DATE: _____

U.S. ELECTRICAL CORPORATION

10/2/2009

CONTRACT: _____

US ELECTRICAL CORPORATION
301 CALIFORNIA ST. SE
ALBUQUERQUE, NM 87108

Subject: Proposed Change Order - GBT Spray System

		MATERIAL		LABOR		
DESCRIPTION	QUAN	UNIT	EXTENSION	UNIT	EXTENSION	RATE
3/4" PVC/RGS	20	3.66	73.20	0.100	2.00	27.80
3/4" PVC/RGS HUB	1	0.70	0.70	0.730	0.73	27.80
3/4" PVC/RGS CONN	2	28.19	56.38	0.750	1.50	27.80
3/4" PVC/RGS SUPPORTS	4	7.99	31.96	0.500	2.00	27.80
#12 THHN	90	0.70	5.00	0.009	0.81	27.80
CONNECT VALVE/PLC	1	4.00	4.00	1.200	1.20	27.80
YUKON PROGRAMMING	1	0.00	0.00	0.000	0.00	27.80
SEALTITE FLEX 3/4"	6	3.76	22.56	0.075	0.45	27.80
3/4" CONDULET	1	38.98	38.98	0.550	0.55	27.80
AS BUILTS	1	0.00	0.00	0.250	0.25	27.80
			232.78		**9.49**	

TOTAL
55.60
20.29
41.70
55.60
22.52
33.36
0.00
12.51
15.29
6.95
263.82

Enviroquip

a division of Eimco Water Technologies

October 1, 2009

Tatsch Construction, Inc.
208 Highway 180 West
Silver City, NM 88061
Phone: (575) 538-3704

RE: Village of Ruidoso- G.B.T. Hopper Wash Proposal #GBT-HW1

Dear: Mr. Miguel Chandler

Following is our proposal for a spray wash system provided by Enviroquip. The equipment is for field assembly and installation by others into the Gravity Belt Thickener Discharge Hopper.

One (1) lot of pipe, fittings and valves consisting of the following:

(1) 1" 304 stainless steel shut-off Ball Valve

(1) 1" 304 stainless steel Solenoid Valve, NEMA 4X rated coil enclosure

(1) Lot of threaded 1" and ½" 304 stainless steel pipe and fittings

(3) ½" PVDF Spray Nozzles

(2) 1" 304 stainless steel U-Bolts with nuts and washers

Total for the above equipment including freight to the job site- **$2,042.00**

Delivery is approximately Two (2) weeks.

This quote is good for thirty (30) days.

Sincerely,

Michael Duick
Project Manager
Enviroquip
A division of Eimco Water Technologies
Phone: 512.834.6005
Fax: 512.834.6039
e-mail: mike.duick@glv.com

ASCO® Red-Hat®

Pilot Operated

General Service Solenoid Valves

Brass or Stainless Steel Bodies

3/8" to 2 1/2" NPT

NC

NO

2/2 SERIES 8210

Features

- Wide range of pressure ratings, sizes, and resilient materials provide long service life and low internal leakage.
- High Flow Valves for liquid, corrosive, and air/inert gas service.
- Industrial applications include:
  - Car wash
  - Laundry equipment
  - Air compressors
  - Industrial water control
  - Pumps

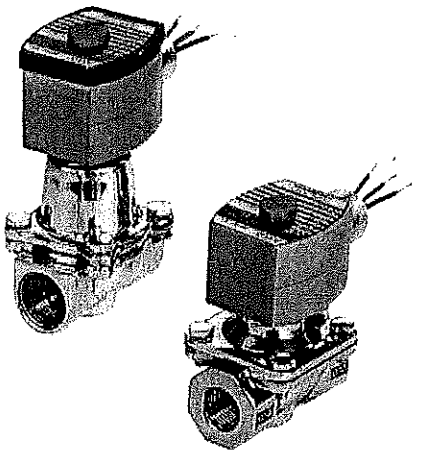

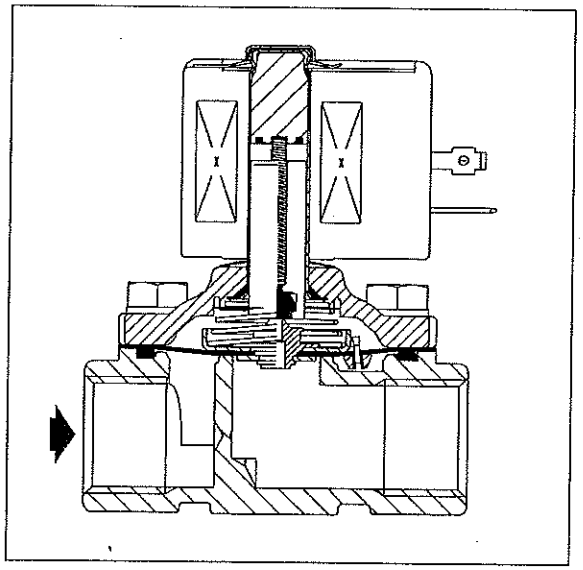

Construction

Valve Parts in Contact with Fluids		
Body	Brass	304 Stainless Steel
Seals and Discs	NBR or PTFE	
Disc-Holder	PA	
Core Tube	305 Stainless Steel	
Core and Plugnut	430F Stainless Steel	
Springs	302 Stainless Steel	
Shading Coil	Copper	Silver

Electrical

Standard Coil and Class of Insulation	Watt Rating and Power Consumption				Spare Coil Part Number			
	DC Watts	AC			General Purpose		Explosionproof	
		Watts	VA Holding	VA Inrush	AC	DC	AC	DC
F	-	6.1	16	40	238210	-	238214	-
F	11.6	10.1	25	70	238610	238710	238614	238714
F	16.8	16.1	35	180	272610	97617	272614	97617
F	-	17.1	40	93	238610	-	238614	-
F	-	20	43	240	99257	-	99257	-
F	-	20.1	48	240	272610	-	272614	-
H	30.6	-	-	-	-	74073	-	74073
H	40.6	-	-	-	-	238910		238914

Standard Voltages: 24, 120, 240, 480 volts AC, 60 Hz (or 110, 220 volts AC, 50 Hz). 6, 12, 24, 120, 240 volts DC. Must be specified when ordering. Other voltages available when required.

Solenoid Enclosures

Standard: Red-Hat II - Watertight, Types 1, 2, 3, 3S, 4, and 4X; Red-Hat - Type I.

Optional: Red-Hat II - Explosionproof and Watertight, Types 3, 3S, 4, 4X, 6, 6P, 7, and 9; Red-Hat - Explosionproof and Watertight, Types 3, 4, 4X, 7, and 9.

(To order, add prefix "EF" to catalog number, except Catalog Numbers 8210B57, 8210B58, and 8210B59. Valves not available with Explosionproof enclosures.)

See Optional Features Section for other available options.

Nominal Ambient Temperature Ranges:

Red-Hat II/
Red-Hat AC: 32°F to 125°F (0°C to 52°C)
Red-Hat II DC: 32°F to 104°F (0°C to 40°C)
Red-Hat DC: 32°F to 77°F (0°C to 25°C)
(104°F/40°C occasionally)

Refer to Engineering Section for details.

Approvals:

CSA certified. Red-Hat II meets applicable CE directives.

Refer to Engineering Section for details.

ASCO®

Specifications (English units)

Pipe Size (ins.)	Orifice Size (ins.)	Cv Flow Factor	Operating Pressure Differential (psi) Min.	Max. AC Air-Inert Gas	Max. AC Water	Max. AC Light Oil @ 300 SSU	Max. DC Air-Inert Gas	Max. DC Water	Max. DC Light Oil @ 300 SSU	Max. Fluid Temp. °F AC	Max. Fluid Temp. °F DC	Brass Body Catalog Number	Brass Body Constr. Ref. No. ④	Brass Body UL ⑤ Listing	Stainless Steel Body Catalog Number	Stainless Steel Body Constr. Ref. No. ④	Stainless Steel Body UL ⑤ Listing	Watt Rating/ Class of Coil Insulation ⑦ AC	Watt Rating/ Class of Coil Insulation ⑦ DC
NORMALLY CLOSED (Closed when de-energized), NBR or PTFE ② Seating																			
3/8	3/8	1.5	①	150	125	-	40	40	-	180	150	8210G73 ③	1P	●	8210G36 ③	1P	●	6.1/F	11.6/F
3/8	5/8	3	0	150	150	-	40	40	-	180	150	8210G93	5D	○	-	-	-	10.1/F	11.6/F
3/8	5/8	3	5	200	150	135	125	100	100	180	150	8210G1	6D	○	-	-	-	6.1/F	11.6/F
3/8	5/8	3	5	300	300	300	-	-	-	175	-	8210G6	5D	○	-	-	-	17.1/F	-
1/2	7/16	2.2	①	150	125	-	40	40	-	180	150	8210G15 ③	2P	●	8210G37 ③	2P	●	6.1/F	11.6/F
1/2	5/8	4	0	150	150	-	40	40	-	180	150	8210G94	5D	○	-	-	-	10.1/F	11.6/F
1/2	5/8	4	0	150	150	125	40	40	-	175	150	-	-	-	8210G87	7D	●	17.1/F	11.6/F
1/2	5/8	4	5	200	150	135	125	100	100	180	150	8210G2	6D	○	-	-	-	6.1/F	11.6/F
1/2	5/8	4	5	300	300	300	-	-	-	175	-	8210G7	5D	○	-	-	-	17.1/F	-
1/2	3/4	4	5	-	300	-	-	300	-	180	125	8210G227	5D	○	-	-	-	17.1/F	40.6/H
3/4	5/8	4.5	0	150	150	125	40	40	-	175	150	-	-	-	8210G88	7D	●	17.1/F	11.6/F
3/4	3/4	5	5	125	125	125	100	90	75	180	150	8210G9	9D	○	-	-	-	6.1/F	11.6/F
3/4	3/4	5	0	150	150	-	40	40	-	180	150	8210G95	8D	○	-	-	-	10.1/F	11.6/F
3/4	3/4	6.5	5	250	150	100	125	125	125	180	150	8210G3	11D	○	-	-	-	6.1/F	11.6/F
3/4	3/4	6	0	-	-	-	200	180	180	-	77	8210B26 ②‡	10P	-	-	-	-	-	30.6/H
3/4	3/4	6	0	350	300	200	-	-	-	200	-	8210G26 ②‡	40P	●	-	-	-	16.1F	-
1	1	13	0	-	-	-	100	100	80	-	77	8210B54 ‡	31D	-	8210D89	15D	-	-	30.6/H
1	1	13	0	150	125	125	-	-	-	180	-	~~8210G54~~	~~41D~~	~~●~~	8210G89	45D	●	16.1/F	-
1	1	13	5	150	150	100	125	125	125	180	150	8210G4	12D	○	-	-	-	6.1/F	11.6/F
1	1	13.5	0	300	225	115	-	-	-	200	-	8210G27 ‡	42P	●	-	-	-	20.1/F	-
1	1	13.5	10	300	300	300	-	-	-	175	-	8210G78 ②	13P	-	-	-	-	17.1/F	-
1 1/4	1 1/8	15	0	-	-	-	100	100	80	-	77	8210B55 ‡	32D	-	-	-	-	-	30.6/H
1 1/4	1 1/8	15	0	150	125	125	-	-	-	180	-	8210G55	43D	●	-	-	-	16.1/F	-
1 1/4	1 1/8	15	5	150	150	100	125	125	125	180	150	8210G8	16D	○	-	-	-	6.1/F	11.6/F
1 1/2	1 1/4	22.5	0	-	-	-	100	100	80	-	77	8210B56 ‡	33D	-	-	-	-	-	30.6/H
1 1/2	1 1/4	22.5	0	150	125	125	-	-	-	180	-	8210G56 ‡	44D	●	-	-	-	16.1/F	-
1 1/2	1 1/4	22.5	5	150	150	100	125	125	125	180	150	8210G22	18D	●	-	-	-	6.1/F	11.6/F
2	1 3/4	43	5	150	125	90	50	50	50	180	150	8210G100	20P	●	-	-	-	6.1/F	11.6/F
2 1/2	1 3/4	45	5	150	125	90	50	50	50	180	150	8210G101	21P	●	-	-	-	6.1/F	11.6/F
NORMALLY OPEN (Open when de-energized), NBR Seating (PA Disc-Holder, except as noted)																			
3/8	5/8	3	0	150	150	125	125	125	80	180	150	8210G33	23D	●	-	-	-	10.1/F	11.6/F
3/8	5/8	3	5	250	200	200	250	200	200	180	180	8210G11 ⑧ ⑨	39D	●	-	-	-	10.1/F	11.6/F
1/2	5/8	4	0	150	150	125	125	125	80	180	150	8210G34	23D	●	-	-	-	10.1/F	11.6/F
1/2	5/8	3	0	150	150	100	125	125	80	180	150	-	-	-	8210G30	37D	●	10.1/F	11.6/F
1/2	5/8	4	5	250	200	200	250	200	200	180	180	8210G12 ⑧ ⑨	39D	●	-	-	-	10.1/F	11.6/F
3/4	3/4	5.5	0	150	150	125	125	125	80	180	150	8210G35	25D	●	-	-	-	10.1/F	11.6/F
3/4	5/8	3	0	150	150	100	125	125	80	180	150	-	-	-	8210G38	38D	●	10.1/F	11.6/F
3/4	3/4	6.5	5	-	-	-	250	200	200	-	180	8210C13	24D	●	-	-	-	-	16.8/F
3/4	3/4	6.5	5	250	200	200	-	-	-	180	-	8210G13	46D	●	-	-	-	16.1/F	-
1	1	13	0	125	125	125	-	-	-	180	-	8210B57 ⑥ ⑩	34D	●	-	-	-	20/F	-
1	1	13	5	-	-	-	125	125	125	-	180	8210D14	26D	●	-	-	-	-	16.8/F
1	1	13	5	150	150	125	-	-	-	180	-	8210G14	47D	●	-	-	-	16.1/F	-
1 1/4	1 1/8	15	0	125	125	125	-	-	-	180	-	8210B58 ⑥ ⑩	35D	●	-	-	-	20/F	-
1 1/4	1 1/8	15	5	-	-	-	125	125	125	-	180	8210D18	28D	●	-	-	-	-	16.8/F
1 1/4	1 1/8	15	5	150	150	125	-	-	-	180	-	8210G18	48D	●	-	-	-	16.1/F	-
1 1/2	1 1/4	22.5	0	125	125	125	-	-	-	180	-	8210B59 ⑥ ⑩	36D	●	-	-	-	20/F	-
1 1/2	1 1/4	22.5	5	-	-	-	125	125	125	-	180	8210D32	29D	●	-	-	-	-	16.8/F
1 1/2	1 1/4	22.5	5	150	150	125	-	-	-	180	-	8210G32	49D	●	-	-	-	16.1/F	-
2	1 3/4	43	5	-	-	-	125	125	125	-	150	8210I03	30P	●	-	-	-	-	16.8/F
2	1 3/4	43	5	125	125	125	-	-	-	180	-	8210G103	50P	●	-	-	-	16.1/F	-
2 1/2	1 3/4	45	5	-	-	-	125	125	125	-	150	8210I04	27P	●	-	-	-	-	16.8/F
2 1/2	1 3/4	45	5	125	125	125	-	-	-	180	-	8210G104	51P	●	-			16.1/F	-

Notes:
① 5 psi on Air; 1 psi on Water.
② Valve provided with PTFE main disc.
③ Valve includes Ultem (G.E. trademark) piston.
④ Letter "D" denotes diaphragm construction; "P" denotes piston construction.
⑤ ○ Safety Shutoff Valve; ● General Purpose Valve. Refer to Engineering Section (Approvals) for details.
⑥ Valves not available with Explosionproof enclosures.
⑦ On 50 hertz service, the watt rating for the 6.1/F solenoid is 8.1 watts.
⑧ AC construction also has PA seating.
⑨ No disc-holder.
⑩ Stainless Steel disc-holder.
‡ Must have solenoid mounted vertical and upright.

ASCO®

Dimensions: inches (mm)

Constr. Refs. 39

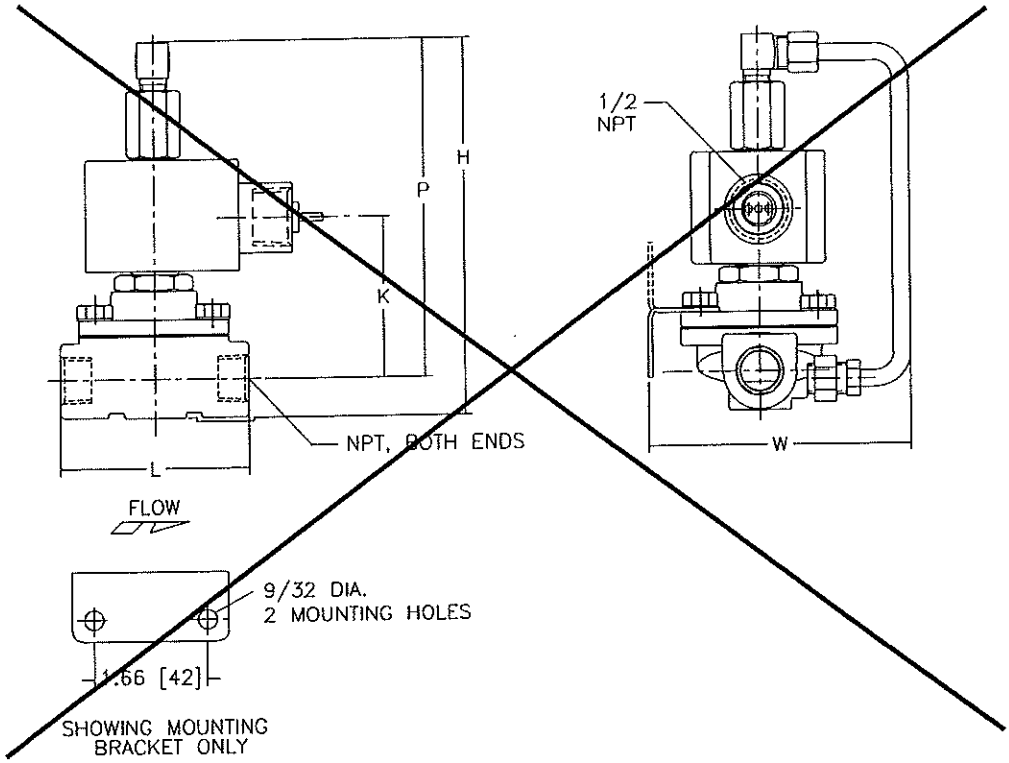

Constr. Refs. 40-51

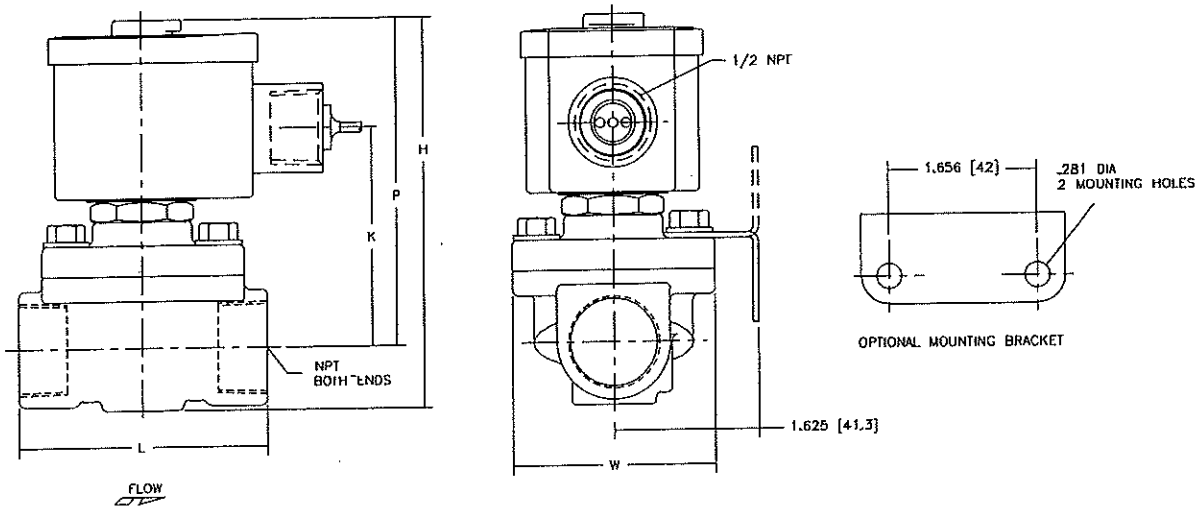

Tangential full cone nozzles
Plastic version
Series 422 / 423

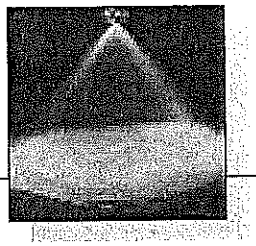

Vaneless tangential design combined with PVDF construction offers an excellent nozzle for critical environmental and chemical processing uses.

Applications:
- Mist eliminator washing
- Chemical reactors
- Scrubbers

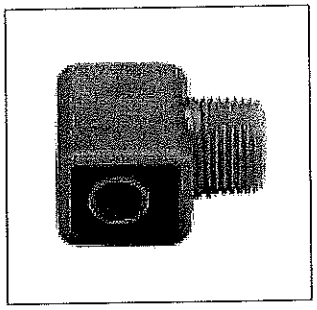

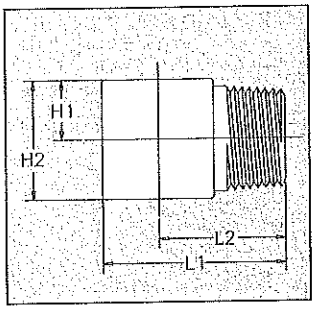

Dimensions [in.]				
Inlet (NPT)	L1	L2	H1	H2
1/4	1.10	.79	.31	.63
~~3/8~~	~~1.42~~	~~.98~~	~~.44~~	~~.81~~
1/2	1.95	1.32	.74	1.50
~~3/4~~	~~2.31~~	~~1.50~~	~~1.00~~	~~1.94~~

Product Codes for Ordering Spray angle 90°	120°	Material Code PVDF 5E	Nozzle Inlet Connection 1/4 NPT	3/8 NPT	1/2 NPT	3/4 NPT	Orifice diam. (in.)	Flow Rate (Gallons Per Minute) 10 psi	20 psi	litres per minute 2 bar	40 psi	60 psi	80 psi	100 psi	Spray Width at 40psi H=10" 90°	H=10" 120°	H=20" 90°	H=20" 120°
422. 406	422. 408	O	BC	-	-	-	.059	.1	.2	1.0	.3	.3	.4	.4	15"	34.6"	27"	60"
	422. 448	O	BC	-	-	-	.065	.1	.2	1.2	.3	.4	.5	.6	15"	34.6"	27"	60"
422. 486	422. 488	O	BC	-	-	-	.075	.2	.3	1.6	.5	.6	.7	.7	15"	34.6"	27"	60"
422. 606		O	-	BE	-	-	.102	.4	.6	3.1	.9	1.2	1.3	1.5	15"	34.6"	27"	60"
422. 646		O	-	BE	-	-	.118	.6	.8	4.0	1.2	1.5	1.7	1.9	15"	34.6"	27"	60"
422. 726	422. 728	O	-	BE	-	-	.146	.9	1.3	6.3	1.9	2.3	2.7	3.0	15"	34.6"	27"	60"
422. 846	422. 848	O	-	BE	-	-	.205	1.9	2.7	12.	3.8	4.7	5.4	6.1	15"	34.6"	27"	60"
422. 886	422. 888	O	-	BE	-	-	.229	2.4	3.5	16.	4.9	6.0	7.0	7.8	15"	34.6"	27"	60"
422. 926		O	-	-	BG	-	.308	3.1	4.3	20.	6.2	7.6	8.7	9.8	15"	34.6"	27"	60"
422. 966	422. 968	O	-	-	BG	-	.316	3.8	5.4	25.	7.7	9.5	10.	12.2	15"	34.6"	27"	60"
423. 006	~~423. 008~~	O	-	-	BG	-	.343	4.8	6.9	31.	9.7	11.	13.	15.4	15"	34.6"	27"	60"
423. 126	423. 128	O	-	-	-	BK	.502	9.7	13.	63.	19.	23.	27.	30.	15"	34.6"	27"	60"

Example: for ordering Type 422. 846 + Material code 5E + Inlet BE = Ordering no. 422. 846. 5E. BE

For a complete listing of all PVDF nozzles, see page 14.

Conversion formula for the above series: $V_2 = V_1 \left(\frac{P_2}{P_1}\right)^{0.4}$

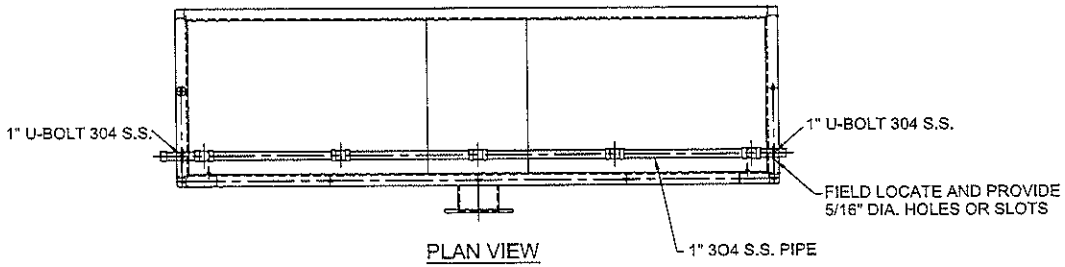

PLAN VIEW

NOTES:

1. ALL PIPE AND FITTINGS SUPPLIED FOR FILELD ASSEMBLY.
2. ALL PIPE AND FITTINGS ARE THREADED 304 S.S.
3. (1) 1" BALL VALVE AND SOLENOID VALVE ARE SUPPLIED FOR FIELD LOCATION AND INSTALLATION.

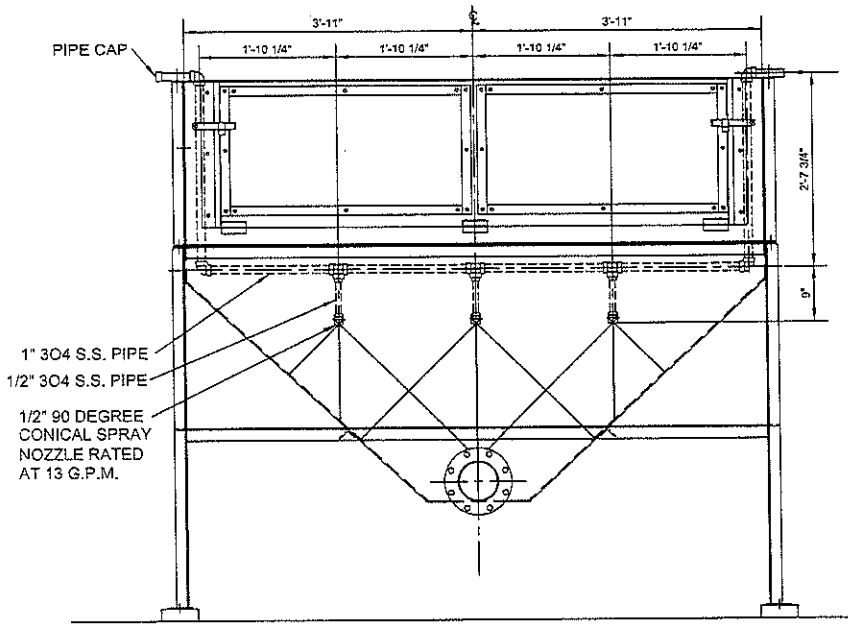

FRONT VIEW

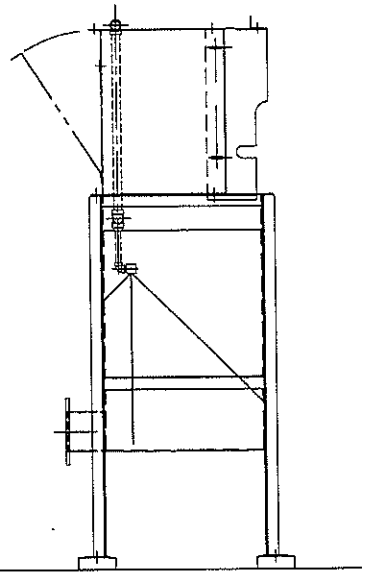

RIGHT SIDE VIEW

NOT FOR CONSTRUCTION

PROPOSED HOPPER WASH BAR

ITEM	QTY	DESCRIPTION	TOTAL WT.

REVISION	ECO	BY	CHK'D	DATE
INITIAL RELEASE				

Enviroquip a division of Enviro Water Technologies — A GLV COMPANY — THIRD ANGLE PROJECTION — B

COPYRIGHT 2009 BY GLV ALL RIGHTS RESERVED - REV D

THIS DRAWING CONTAINS CONFIDENTIAL PROPRIETARY INFORMATION OF ENVIRO WATER TECHNOLOGIES AND IS NOT TO BE DISCLOSED NOR TO BE USED EXCEPT FOR EVALUATING PROPOSALS OF ENVIRO WATER TECHNOLOGIES OR INSTALLING, OPERATING OR MAINTAINING ENVIRO WATER TECHNOLOGIES EQUIPMENT, UNLESS OTHERWISE AUTHORIZED IN WRITING BY ENVIRO WATER TECHNOLOGIES.

TOTAL WT: -

PROJECT: 20701

Village of Ruidoso
Ruidoso, New Mexico
G.B.T. Hopper Wash Bar Proposal

DO NOT SCALE PRINTS

REF. FROM: -

SHEET 1 OF 1

DATE	9/28/09	
DRAWN	mad	
CHECK'D	-	

DWG. NO. 20701 GBT-HW — REV A

Angel Campos

From: Angel Campos
Sent: Tuesday, October 06, 2009 11:21 AM
To: 'Randall Camp'; cordpwd@zianet.com; 'EdensJr, Walter, NMENV'; WilliamMorris@ruidoso-nm.gov; 'LisaSanchez@ruidoso-nm.gov'
Cc: molzencorbin@windstream.net; Eric Sorenson; Del Archuleta; Ron Mosher
Subject: Ruidoso Phase 1A - CP No. 29 Gravity Thickener Hopper Spray System - Notice to Proceed
Attachments: CP#29 rev1 - Add Spray System to GBT Hopper.pdf

October 6, 2009

TO: Richard Rogers, Tatsch Construction
Miguel Chandler, Tatsch Construction

CC: Randall Camp, Village of Ruidoso
Bill Morris, Village of Ruidoso
Cleatus Richards, City of Ruidoso Downs
Sandy Edens, New Mexico Environment Department

RE: Ruidoso WWTP Phase 1A Construction
Change Proposal No. 29 – Add Spray Nozzle System to Gravity Belt Thickener Hopper - Notice to Proceed

This is to inform Tatsch Construction that the Village of Ruidoso, City of Ruidoso Downs, and the New Mexico Environment Department have pre-approved Change Proposal No. 29 summarized in the attachment dated October 5, 2009. By receipt of these pre-approvals, Tatsch Construction is authorized to proceed with this change proposal for the amount of $4,223.54. The requested time extension of six (6) calendar day is approved. This change proposal will be added to the Contract by the Change Order provisions of the Contract Documents and will be included in the next formal Change Order to the Contract.

Please call me, should you have any questions regarding this communication.

Sincerely,

From: Angel Campos
Sent: Monday, October 05, 2009 2:19 PM
To: 'Randall Camp'; cordpwd@zianet.com; 'EdensJr, Walter, NMENV'; 'LisaSanchez@ruidoso-nm.gov'
Cc: Del Archuleta; Ron Mosher; Eric Sorenson
Subject: Ruidoso Phase 1A - Change Proposal No. 29 Gravity Thickener Hopper Spray System - Request for Pre-Approval

October 5, 2009

TO: Randall Camp, Village of Ruidoso
Cleatus Richards, City of Ruidoso Downs
Sandy Edens, New Mexico Environment Department

RE: Engineer's Review of Change Proposal No. 29
Add Spray Nozzle System to Gravity Belt Thickener Hopper
Request for Pre-Approval

A. SCOPE AND JUSTIFICATION: Tatsch Construction and Enviroquip tested the belt filter press and gravity belt thickener on September 15 and 16, 2009. Enviroquip field representative recommended to add a three spray nozzle system to the gravity belt thickener. The automated spray nozzle system would be used at shut down of the thickener to assist in removing thickened sludge from the hopper and also to remove thickened sludge from the pump forcemain line. Removing thickened sludge from the forcemain line will prevent potential clogging/plugging problems.

The scope of work for the spray nozzle system will include:

1. Extend a 1" washwater supply line to the hopper, include a shut off valve and solenoid valve.
2. Install three spray nozzles in the hopper.
3. Install electrical conduit and wiring to solenoid valve.
4. Revise hardware and software programming to operate the solenoid valve.

The addition of the hopper spray system was approved by the Village of Ruidoso and the City of Ruidoso Down.

B. ENGINEER'S COMMENTS: The Contractor's initial price proposal is not approved. The Contractor's revised price is for $4,223.54 which includes all labor, spray system from Enviroquip, electrical work plus Contractor allowable markups. The spray system materials from Enviroquip is for $2,042 and a listing of the components is included in the proposal. We find the revised price proposal reasonable for the scope of work. A time extension of six (6) calendar days is requested by the Contractor.

C. SUMMARY - REQUEST FOR APPROVAL BY OWNER AND NEW MEXICO ENVIRONMENT DEPARTMENT: The Engineer is requesting pre-approval of this additional work from the Owner and NMED. Please acknowledge pre-approval by replying to this request. This additional work in the amount of $4,223.54. will be added by Change Order to the Contract Documents after receipt of NMED approval. A time extension of six (6) calendar days will also be included in the Change Order.

NOTE: TATSCH CONSTRUCTION IS REQUESING A RESPONSE TO PROCEED NO LATER THAN OCTOBER 9, 2009.

Please call me if you have any questions regarding this communication.

Angel Campos
Molzen-Corbin & Associates
acampos@molzencorbin.com
(505) 242-5700

From: Randy Camp [mailto:RandallCamp@ruidoso-nm.gov]
Sent: Friday, September 18, 2009 1:55 PM
To: Angel Campos
Subject: RE: Ruidoso Phase 1A - Gravity Thickener Hopper Spray System

On behalf of the Village of Ruidoso, I approve of this modification.
Randall Camp

Public Works Director
Village of Ruidoso

From: Angel Campos [mailto:acampos@molzencorbin.com]
Sent: Friday, September 18, 2009 6:23 AM
To: RandallCamp@ruidoso-nm.gov; cordpwd@zianet.com; BobbySnowden@ruidoso-nm.gov
Cc: Richard A.Rogers; miguel@tatschconstruction.com; molzencorbin@windstream.net; Del Archuleta; Eric Sorenson; Henry Henderson
Subject: Ruidoso Phase 1A - Gravity Thickener Hopper Spray System

September 18, 2009

RE: Gravity Belt Thickener Verification by Enviroquip
Hopper Modifications

Tatsch Construction and Enviroquip tested the belt filter press and gravity belt thickener on September 15 and 16. The testing included electrical and instrumentation/control verification. Gary Hahn, Enviroquip field representative recommended to add a three spray nozzle system to the gravity belt thickener. The automated spray nozzle system would be used at shut down of the thickener to assist in removing thickened sludge from the hopper and also to remove thickened sludge from the pump forcemain line. Removing thickened sludge from the forcemain line will prevent potential clogging/plugging problems.

The scope of work for the spray nozzle system will include:

5. Extend a 1" washwater supply line to the hopper, include a shut off valve and solenoid valve.
6. Install three spray nozzles in the hopper.
7. Install electrical conduit and wiring to solenoid valve.
8. Revise hardware and software programming to operate the solenoid valve.

We agree with Enviroquip's recommendation to add the spray system in the hopper. I am requesting authorization from Ruidoso and Ruidoso Down to request a price proposal from Tatsch Construction.

Please call me should you have any questions regarding this request.

Sincerely,

Angel Campos
Molzen-Corbin & Associates
acampos@molzencorbin.com
(505) 242-5700

Angel Campos

From: EdensJr, Walter, NMENV [Sandy.Edens@state.nm.us]
Sent: Monday, October 05, 2009 5:19 PM
To: Angel Campos
Subject: RE: Ruidoso Phase 1A - Change Proposal No. 29 Gravity Thickener Hopper Spray System - Request for Pre-Approval

I concur assuming funds are available.

Sandy Edens, P.E.
Project Manager
New Mexico Environment Department, CPB
5500 San Antonio NE
Albuquerque, NM 87109
505-222-9512

From: Angel Campos [mailto:acampos@molzencorbin.com]
Sent: Monday, October 05, 2009 2:19 PM
To: 'Randall Camp'; cordpwd@zianet.com; EdensJr, Walter, NMENV; LisaSanchez@ruidoso-nm.gov
Cc: Archuleta, Del; Ron Mosher; Eric Sorenson
Subject: Ruidoso Phase 1A - Change Proposal No. 29 Gravity Thickener Hopper Spray System - Request for Pre-Approval

October 5, 2009

TO: Randall Camp, Village of Ruidoso
Cleatus Richards, City of Ruidoso Downs
Sandy Edens, New Mexico Environment Department

RE: Engineer's Review of Change Proposal No. 29
Add Spray Nozzle System to Gravity Belt Thickener Hopper
Request for Pre-Approval

A. SCOPE AND JUSTIFICATION: Tatsch Construction and Enviroquip tested the belt filter press and gravity belt thickener on September 15 and 16, 2009. Enviroquip field representative recommended to add a three spray nozzle system to the gravity belt thickener. The automated spray nozzle system would be used at shut down of the thickener to assist in removing thickened sludge from the hopper and also to remove thickened sludge from the pump forcemain line. Removing thickened sludge from the forcemain line will prevent potential clogging/plugging problems.

The scope of work for the spray nozzle system will include:

1. Extend a 1" washwater supply line to the hopper, include a shut off valve and solenoid valve.
2. Install three spray nozzles in the hopper.
3. Install electrical conduit and wiring to solenoid valve.
4. Revise hardware and software programming to operate the solenoid valve.

The addition of the hopper spray system was approved by the Village of Ruidoso and the City of Ruidoso Down.

B. ENGINEER'S COMMENTS: The Contractor's initial price proposal is not approved. The Contractor's revised price is for $4,223.54 which includes all labor, spray system from

Enviroquip, electrical work plus Contractor allowable markups. The spray system materials from Enviroquip is for $2,042 and a listing of the components is included in the proposal. We find the revised price proposal reasonable for the scope of work. A time extension of six (6) calendar days is requested by the Contractor.

C. SUMMARY - REQUEST FOR APPROVAL BY OWNER AND NEW MEXICO ENVIRONMENT DEPARTMENT: The Engineer is requesting pre-approval of this additional work from the Owner and NMED. Please acknowledge pre-approval by replying to this request. This additional work in the amount of $4,223.54. will be added by Change Order to the Contract Documents after receipt of NMED approval. A time extension of six (6) calendar days will also be included in the Change Order.

NOTE: TATSCH CONSTRUCTION IS REQUESING A RESPONSE TO PROCEED NO LATER THAN OCTOBER 9, 2009.

Please call me if you have any questions regarding this communication.

Angel Campos
Molzen-Corbin & Associates
acampos@molzencorbin.com
(505) 242-5700

From: Randy Camp [mailto:RandallCamp@ruidoso-nm.gov]
Sent: Friday, September 18, 2009 1:55 PM
To: Angel Campos
Subject: RE: Ruidoso Phase 1A - Gravity Thickener Hopper Spray System

On behalf of the Village of Ruidoso, I approve of this modification.
Randall Camp
Public Works Director
Village of Ruidoso

From: Angel Campos [mailto:acampos@molzencorbin.com]
Sent: Friday, September 18, 2009 6:23 AM
To: RandallCamp@ruidoso-nm.gov; cordpwd@zianet.com; BobbySnowden@ruidoso-nm.gov
Cc: Richard A.Rogers; miguel@tatschconstruction.com; molzencorbin@windstream.net; Del Archuleta; Eric Sorenson; Henry Henderson
Subject: Ruidoso Phase 1A - Gravity Thickener Hopper Spray System

September 18, 2009

RE: Gravity Belt Thickener Verification by Enviroquip
Hopper Modifications

Tatsch Construction and Enviroquip tested the belt filter press and gravity belt thickener on September 15 and 16. The testing included electrical and instrumentation/control verification. Gary Hahn, Enviroquip field representative recommended to add a three spray nozzle system to the gravity belt thickener. The automated spray nozzle system would be used at shut down of the thickener to assist in removing thickened sludge from the hopper and also to remove thickened sludge from the pump forcemain line. Removing thickened sludge from the forcemain line will prevent potential clogging/plugging problems.

The scope of work for the spray nozzle system will include:

5. Extend a 1" washwater supply line to the hopper, include a shut off valve and solenoid valve.
6. Install three spray nozzles in the hopper.
7. Install electrical conduit and wiring to solenoid valve.
8. Revise hardware and software programming to operate the solenoid valve.

We agree with Enviroquip's recommendation to add the spray system in the hopper. I am requesting authorization from Ruidoso and Ruidoso Down to request a price proposal from Tatsch Construction.

Please call me should you have any questions regarding this request.

Sincerely,

Angel Campos
Molzen-Corbin & Associates
acampos@molzencorbin.com
(505) 242-5700

This inbound email has been scanned for malicious software and transmitted safely to you using Webroot Email Security.

Confidentiality Notice: This e-mail,including all attachments is for the sole use of the intended recipient(s) and may contain confidential and privileged information. Any unauthorized review,use,disclosure or distribution is prohibited unless specifically provided under the New Mexico Inspection of Public Records Act. If you are not the intended recipient, please contact the sender and destroy all copies of this message.
This email has been scanned using Webroot Email Security.

Confidentiality Notice: This e-mail, including all attachments is for the sole use of the intended recipient(s) and may contain confidential and privileged information. Any unauthorized review, use, disclosure or distribution is prohibited unless specifically provided under the New Mexico Inspection of Public Records Act. If you are not the intended recipient, please contact the sender and destroy all copies of this message. -- This email has been scanned by the Sybari - Antigen Email System.

Angel Campos

From: Lisa Sanchez [LisaSanchez@ruidoso-nm.gov]
Sent: Tuesday, October 06, 2009 10:51 AM
To: Angel Campos
Subject: RE: Ruidoso Phase 1A - Change Proposal No. 29 Gravity Thickener Hopper Spray System - Request for Pre-Approval

Importance: High

Angel,
Randy instructed me to let u know that he approves this CP#29

Lisa

From: Angel Campos [mailto:acampos@molzencorbin.com]
Sent: Monday, October 05, 2009 2:19 PM
To: 'Randall Camp'; cordpwd@zianet.com; EdensJr, Walter, NMENV; LisaSanchez@ruidoso-nm.gov
Cc: Del Archuleta; Ron Mosher; Eric Sorenson
Subject: Ruidoso Phase 1A - Change Proposal No. 29 Gravity Thickener Hopper Spray System - Request for Pre-Approval

October 5, 2009

TO: Randall Camp, Village of Ruidoso
Cleatus Richards, City of Ruidoso Downs
Sandy Edens, New Mexico Environment Department

RE: Engineer's Review of Change Proposal No. 29
Add Spray Nozzle System to Gravity Belt Thickener Hopper
Request for Pre-Approval

A. SCOPE AND JUSTIFICATION: Tatsch Construction and Enviroquip tested the belt filter press and gravity belt thickener on September 15 and 16, 2009. Enviroquip field representative recommended to add a three spray nozzle system to the gravity belt thickener. The automated spray nozzle system would be used at shut down of the thickener to assist in removing thickened sludge from the hopper and also to remove thickened sludge from the pump forcemain line. Removing thickened sludge from the forcemain line will prevent potential clogging/plugging problems.

The scope of work for the spray nozzle system will include:

1. Extend a 1" washwater supply line to the hopper, include a shut off valve and solenoid valve.
2. Install three spray nozzles in the hopper.
3. Install electrical conduit and wiring to solenoid valve.
4. Revise hardware and software programming to operate the solenoid valve.

The addition of the hopper spray system was approved by the Village of Ruidoso and the City of Ruidoso Down.

B. ENGINEER'S COMMENTS: The Contractor's initial price proposal is not approved. The Contractor's revised price is for $4,223.54 which includes all labor, spray system from Enviroquip, electrical work plus Contractor allowable markups. The spray system

materials from Enviroquip is for $2,042 and a listing of the components is included in the proposal. We find the revised price proposal reasonable for the scope of work. A time extension of six (6) calendar days is requested by the Contractor.

C. SUMMARY - REQUEST FOR APPROVAL BY OWNER AND NEW MEXICO ENVIRONMENT DEPARTMENT: The Engineer is requesting pre-approval of this additional work from the Owner and NMED. Please acknowledge pre-approval by replying to this request. This additional work in the amount of $4,223.54. will be added by Change Order to the Contract Documents after receipt of NMED approval. A time extension of six (6) calendar days will also be included in the Change Order.

NOTE: TATSCH CONSTRUCTION IS REQUESING A RESPONSE TO PROCEED NO LATER THAN OCTOBER 9, 2009.

Please call me if you have any questions regarding this communication.

Angel Campos
Molzen-Corbin & Associates
acampos@molzencorbin.com
(505) 242-5700

From: Randy Camp [mailto:RandallCamp@ruidoso-nm.gov]
Sent: Friday, September 18, 2009 1:55 PM
To: Angel Campos
Subject: RE: Ruidoso Phase 1A - Gravity Thickener Hopper Spray System

On behalf of the Village of Ruidoso, I approve of this modification.
Randall Camp
Public Works Director
Village of Ruidoso

From: Angel Campos [mailto:acampos@molzencorbin.com]
Sent: Friday, September 18, 2009 6:23 AM
To: RandallCamp@ruidoso-nm.gov; cordpwd@zianet.com; BobbySnowden@ruidoso-nm.gov
Cc: Richard A.Rogers; miguel@tatschconstruction.com; molzencorbin@windstream.net; Del Archuleta; Eric Sorenson; Henry Henderson
Subject: Ruidoso Phase 1A - Gravity Thickener Hopper Spray System

September 18, 2009

RE: Gravity Belt Thickener Verification by Enviroquip
Hopper Modifications

Tatsch Construction and Enviroquip tested the belt filter press and gravity belt thickener on September 15 and 16. The testing included electrical and instrumentation/control verification. Gary Hahn, Enviroquip field representative recommended to add a three spray nozzle system to the gravity belt thickener. The automated spray nozzle system would be used at shut down of the thickener to assist in removing thickened sludge from the hopper and also to remove thickened sludge from the pump forcemain line. Removing thickened sludge from the forcemain line will prevent potential clogging/plugging problems.

The scope of work for the spray nozzle system will include:

5. Extend a 1" washwater supply line to the hopper, include a shut off valve and solenoid valve.
6. Install three spray nozzles in the hopper.
7. Install electrical conduit and wiring to solenoid valve.
8. Revise hardware and software programming to operate the solenoid valve.

We agree with Enviroquip's recommendation to add the spray system in the hopper. I am requesting authorization from Ruidoso and Ruidoso Down to request a price proposal from Tatsch Construction.

Please call me should you have any questions regarding this request.

Sincerely,

Angel Campos
Molzen-Corbin & Associates
acampos@molzencorbin.com
(505) 242-5700

Angel Campos

From: Cleatus Richards [cordpwd@zianet.com]
Sent: Tuesday, October 06, 2009 7:45 AM
To: Angel Campos
Subject: Re: Ruidoso Phase 1A - Change Proposal No. 29 Gravity Thickener Hopper Spray System - Request for Pre-Approval

Angel:
I have reviewed change proposal # 29 to add Gravity Thickener Hopper Spray System at added cost of $ 4,223.54 and add 6
calendar days to contract time and hereby acknowledge my pre-approval of same
Cleatus Richards
City of Ruidoso Downs

----- Original Message -----

From: Angel Campos
To: 'Randall Camp' ; cordpwd@zianet.com ; EdensJr, Walter, NMENV ; LisaSanchez@ruidoso-nm.gov
Cc: Del Archuleta ; Ron Mosher ; Eric Sorenson
Sent: Monday, October 05, 2009 2:19 PM
Subject: Ruidoso Phase 1A - Change Proposal No. 29 Gravity Thickener Hopper Spray System - Request for Pre-Approval

October 5, 2009

TO: Randall Camp, Village of Ruidoso
Cleatus Richards, City of Ruidoso Downs
Sandy Edens, New Mexico Environment Department

RE: Engineer's Review of Change Proposal No. 29
Add Spray Nozzle System to Gravity Belt Thickener Hopper
Request for Pre-Approval

A. SCOPE AND JUSTIFICATION: Tatsch Construction and Enviroquip tested the belt filter press and gravity belt thickener on September 15 and 16, 2009. Enviroquip field representative recommended to add a three spray nozzle system to the gravity belt thickener. The automated spray nozzle system would be used at shut down of the thickener to assist in removing thickened sludge from the hopper and also to remove thickened sludge from the pump forcemain line. Removing thickened sludge from the forcemain line will prevent potential clogging/plugging problems.

The scope of work for the spray nozzle system will include:

1. Extend a 1" washwater supply line to the hopper, include a shut off valve and solenoid valve.
2. Install three spray nozzles in the hopper.
3. Install electrical conduit and wiring to solenoid valve.
4. Revise hardware and software programming to operate the solenoid valve.

The addition of the hopper spray system was approved by the Village of Ruidoso and the City of Ruidoso Down.

B. ENGINEER'S COMMENTS: The Contractor's initial price proposal is not approved. The Contractor's revised price is for $4,223.54 which includes all labor, spray system from Enviroquip, electrical work plus Contractor allowable markups. The spray system materials from Enviroquip is for $2,042 and a listing of the components is included in the proposal. We find the revised price proposal reasonable for the scope of work. A time extension of six (6) calendar days is requested by the Contractor.

C. SUMMARY - REQUEST FOR APPROVAL BY OWNER AND NEW MEXICO ENVIRONMENT DEPARTMENT: The Engineer is requesting pre-approval of this additional work from the Owner and NMED. Please acknowledge pre-approval by replying to this request. This additional work in the amount of $4,223.54. will be added by Change Order to the Contract Documents after receipt of NMED approval. A time extension of six (6) calendar days will also be included in the Change Order.

NOTE: TATSCH CONSTRUCTION IS REQUESING A RESPONSE TO PROCEED NO LATER THAN OCTOBER 9, 2009.

Please call me if you have any questions regarding this communication.

Angel Campos
Molzen-Corbin & Associates
acampos@molzencorbin.com
(505) 242-5700

From: Randy Camp [mailto:RandallCamp@ruidoso-nm.gov]
Sent: Friday, September 18, 2009 1:55 PM
To: Angel Campos
Subject: RE: Ruidoso Phase 1A - Gravity Thickener Hopper Spray System

On behalf of the Village of Ruidoso, I approve of this modification.
Randall Camp
Public Works Director
Village of Ruidoso

From: Angel Campos [mailto:acampos@molzencorbin.com]
Sent: Friday, September 18, 2009 6:23 AM
To: RandallCamp@ruidoso-nm.gov; cordpwd@zianet.com; BobbySnowden@ruidoso-nm.gov
Cc: Richard A.Rogers; miguel@tatschconstruction.com; molzencorbin@windstream.net; Del Archuleta; Eric Sorenson; Henry Henderson
Subject: Ruidoso Phase 1A - Gravity Thickener Hopper Spray System

September 18, 2009

RE: Gravity Belt Thickener Verification by Enviroquip
Hopper Modifications

Tatsch Construction and Enviroquip tested the belt filter press and gravity belt thickener on September 15 and 16. The testing included electrical and instrumentation/control verification. Gary Hahn, Enviroquip field representative recommended to add a three spray nozzle system to the gravity belt thickener. The automated spray nozzle system would be used at shut down of the thickener to assist in removing thickened sludge from the hopper and also to

remove thickened sludge from the pump forcemain line. Removing thickened sludge from the forcemain line will prevent potential clogging/plugging problems.

The scope of work for the spray nozzle system will include:

5. Extend a 1" washwater supply line to the hopper, include a shut off valve and solenoid valve.
6. Install three spray nozzles in the hopper.
7. Install electrical conduit and wiring to solenoid valve.
8. Revise hardware and software programming to operate the solenoid valve.

We agree with Enviroquip's recommendation to add the spray system in the hopper. I am requesting authorization from Ruidoso and Ruidoso Down to request a price proposal from Tatsch Construction.

Please call me should you have any questions regarding this request.

Sincerely,

Angel Campos
Molzen-Corbin & Associates
acampos@molzencorbin.com
(505) 242-5700